TM 11-5125

DEPARTMENT OF THE ARMY TECHNICAL MANUAL

RADIO COMPASS AN/ARN-6

DEPARTMENT OF THE ARMY • SEPTEMBER 1956

TECHNICAL MANUAL

RADIO COMPASS AN/ARN-6

TM 11-5125
CHANGES No. 1

HEADQUARTERS,
DEPARTMENT OF THE ARMY
WASHINGTON 25, D.C., *26 October 1960*

TM 11-5125, 28 September 1956, is changed as follows:

Section 1, paragraph 2, Table 1-1. Make the following changes in "Air Force Type Designation" column:

Line 4. Delete MT-273A/ARN-6 and substitute: MT-273B/ARN-6.
Line 5. Delete MT-273B/ARN-6 and substitute: MT-273C/ARN-6.
Line 35. Below CG-134/ARN-6, delete all information in all columns and substitute:

Quantity per installation		Name of unit	Air Force type designation	Navy type designation	Overall dimensions (inches)	Weight (pounds)
Single	Dual					
(††)	(††)	Cord (Loop RF) with one right angle connector.	CG-491/ARN-6		10¼	
(††)	(††)	Cord (loop RF)	CG-610/ARN-6		115¼	
1	1	Cord (Antenna) or	CG-405/ARN-6		72	0.62
		Cord (Antenna).	CG-320/ARN-6		180	1.38
(††)	(††)	Cord (Antenna)	CG-613/ARN-6		115½	
(††)	------	Cord (Antenna)	CG-614/ARN-6		15½	
1	2	Chart (Operational)			14½ x 6 15/16 x 1/64	0.06
*1	*1	Loop (including Cover) CW-141/ARN-6.	AS-313/ARN-6 or AS-313A/ARN-6 or AS-313B/ARN-6.		5¾ x 10 21/32 x 9 11/32†	†14.0

Beneath Table 1-1, add the following footnote:

††These nonstandard sized cords are necessary in some installations. The quantity of nonstandard sized cords will be determined by the type of installation.

Section II, paragraph 1*a*(2). Make the following changes:

Subparagraph (*g*). Add the following note after subparagraph (*g*):

Note. If nonstandard cords are used in preinstallation bench tests, the total capacitance and inductance of the nonstandard cords must be identical with the total capacitance and inductance of equivalent standard cords.

Subparagraph (*i*)*1*. Add the following after subparagraph *1*:

1.1. Rotate all external controls fully clockwise (to the extreme right).

Delete subparagraph *2*. and substitute:

2. Plug a headset into a control box. Tune in several stations (preferably two broadcast and two range stations) in each band. If possible, pick stations at both extremes of the TUNING crank travel so that the entire range of the tuning capacitor is used.

Delete subparagraph *5* and substitute:

5. Change the function switch to the ANT position and check the operation of the equipment when tuned to a broadcast or range station in each frequency band. In the ANT position, the loop indicators are inoperative.

Delete subparagraph 7. and substitute:

7. To check the CW-VOICE switch, place the switch in the CW position. In COMP-ADF operation, a 900-cycle tone will be heard along with the station modulation. In LOOP or ANT operation, a variable frequency beat note will be heard as the station is tuned in. Check the CW-VOICE switch several times during COMP-ADF operation, and at least once during LOOP or ANT operation.

Figure 2–1. Delete the call-out MOISTURE INDICATOR.

Section II, paragraph 1*c*(7). After the note, add the following:

(7.1) To make the transition from pressurized to nonpressurized compartments in certain aircraft (for example, to bridge bulkheads), it may be necessary to use a combination of two or more nonstandard cords (fig. 6–19.1 and 6–19.2) to replace standard cords. The total capacitance and inductance of these nonstandard cords must be identical with the total capacitance and inductance of the equivalent standard cord.

Paragraph 1*d*. Make the following changes. Add the following after subparagraph (1)(*d*):

(1.1) *Preflight tests.* If the installation is for dual control, make the following checks from each control box or control panel.

(*a*) Set the function selector switch of the remote control to the COMP-ADF position and allow the radio compass to warm up for at least 5 minutes.

(*b*) Rotate all controls fully clockwise (to the extreme right).

(*c*) Tune the compass receiver to several broadcast or range stations in each band and determine that the compass is taking definite bearing on each station.

(*d*) Select the CW function on the CW-VOICE switch and note that the 900-cycle tone is heard in the headset.

(*e*) Turn the function selector switch to the LOOP position and by means of the L–R switch, rotate the loop through 360°. Check for smooth action of the indicators while the loop is rotating.

(*f*) Select the ANT position on the function selector switch and tune the radio compass to several broadcast or range stations in each frequency band. Use the headset to check for satisfactory reception when the equipment is functioning with the antenna. Place the CW-VOICE switch in the CW position and note the presence of a variable-frequency audio tone as a station is tuned in.

(*g*) Check the operation of the control change switch, band switch, audio control, light control, and tuning crank action on each of the remote control boxes.

Delete the heading for subparagraph 1*d*(2) and substitute:

(2) *Flight tests.*

Add the following note to figure 2–12:

NOTE

COMBINATIONS OF NONSTANDARD CORDS (FIG. 6–19.1 and 6–19.2) MAY REPLACE CORDS 1 AND/OR 2 IN CERTAIN INSTALLATIONS.

Add the following note to figure 2–13:

NOTE

COMBINATIONS OF NONSTANDARD CORDS (FIG. 6–19.1 and 6–19.2) MAY REPLACE CORDS 1 AND/OR 2 IN CERTAIN INSTALLATIONS.

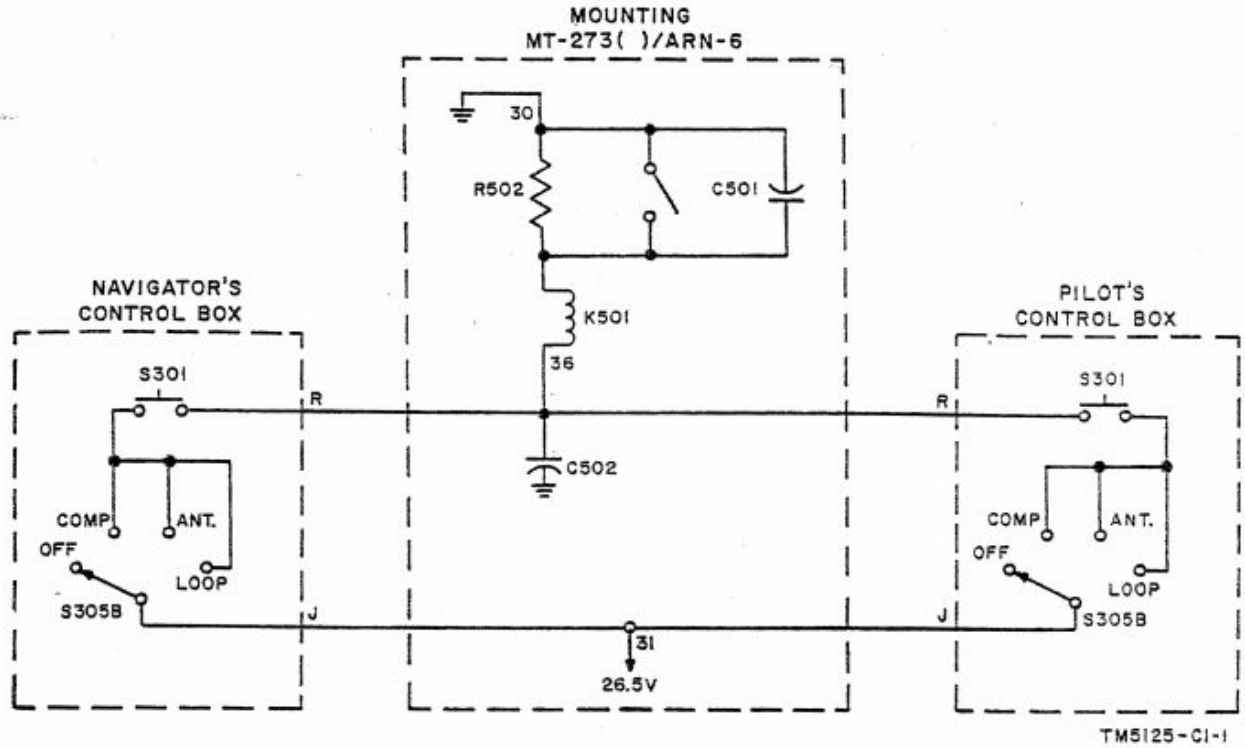

Figure 4–20. (Superseded) *Control transfer circuit, functional diagram.*

Figure 4–21. Delete view of CHANGEOVER RELAY K501 which shows SPRING RETURN WAFER (NONSTEPPING).

Section IV, paragraph 3*i*(2). Delete subparagraph (2) and substitute:

(2) In addition to the control changeover wafer switches on relay K501 (fig. 2–21), a spring-type switch, operated by a lever on the shaft of the relay solenoid, is arranged to open a pair of normally closed contacts when the relay is energized. When the contacts open, resistor R502 (fig. 4–20) is connected in series with the relay coil to prevent overheating in case switch S301 should remain pressed for an appreciable time. Capacitor C502 is used for spark reduction when S301 is opened.

Section V, paragraph 1*c*. Delete subparagraph (5) and substitute:

(5) *Loop.* Remove the loop housing, if used, by removing the 12 screws from around the base of the housing and lift it off. Remove all grease and dirt from the loop, both inside and outside the plane. Inspect the loop for condensation inside the dome and for cracks in the glass. If either is present, replace the entire loop assembly. Inspect fit of loop mounting and tighten if loose. Reinstall the loop housing with care.

Page 57, paragraph 1*d*(5). Make the following changes:

Delete the heading and substitute:

(5) *Loop AS-313( )/ARN-6* (figs. 1–8, 2–1, and 2–2).

Delete subparagraph (*a*) and substitute:

(*a*) Remove the loop housing (CW-141) if used. Remove all grease and dirt from the loop, both inside and outside the plane. Inspect the loop for condensation inside the dome and for cracks in the glass. If either is present, replace the entire loop assembly. Inspect the connector plugs for corrosion and possible damage.

Page 100A, paragraph 8*b*(5). Delete table 5–12 and substitute:

Table 5–12. Mounting MT-573( )/ARN-6—Continuity

From terminal—	To terminal—	Color 1	From terminal—	To terminal—	Color 1
A on J501	29 on E501	BLK	5 on Wafer 1	46 on E501	YEL-BLU
B on J501	38 on E501	WHT-GRN	6 on Wafer 1	45 on E501	WHT-RED
C on J501	39 on E501	WHT-BLK	7 on Wafer 1	33 on E501	YEL-RED
D on J501	22 on E501	WHT-YEL	12 on Wafer 1	21 on E501	WHT-RED
E on J501	21 on E501	WHT-RED	1 on Wafer 2	6 on E501	BLK-RED
F on J501	20 on E501	WHT-BRN	2 on Wafer 2	5 on E501	BLK-BRN
G on J501	49 on E501	YEL	5 on Wafer 2	50 on E501	BLK-BRN
H on J501	23 on E501	BLK-BRN	6 on Wafer 2	51 on E501	BLK-RED
J on J501	24 on E501	BLK-RED	7 on Wafer 2	23 on E501	BLK-BRN
K on J501	25 on E501	BLK-ORN	12 on Wafer 2	24 on E501	BLK-RED
L on J501	26 on E501	BLK-YEL	1 on Wafer 3	8 on E501	BLK-YEL
M on J501	35 on E501	BLK-WHT	2 on Wafer 3	7 on E501	BLK-ORN
P on J501	32 on E501	ORN	5 on Wafer 3	52 on E501	BLK-ORN
R on J501	34 on E501	BLK-RED	6 on Wafer 3	53 on E501	BLK-YEL
S on J501	41 on E501	RED-YEL	7 on Wafer 3	25 on E501	BLK-ORN
U on J501	44 on E501	BRN	12 on Wafer 3	26 on E501	BLK-YEL
W on J501	42 on E501	BLU	1 on Wafer 4	10 on E501	YEL
X on J501	2 on E501	BLK-WHT	2 on Wafer 4	9 on E501	YEL-BLK
Z on J501	30 on E501	BLK	5 on Wafer 4	54 on E501	YEL-BLK
1 on Wafer 1	27 on E501	WHT-RED	6 on Wafer 4	55 on E501	YEL
2 on Wafer 1	1 on E501	YEL-GRN			

From terminal—	To terminal—	Color 2	From terminal—	To terminal—	Color 2
7 on Wafer 4	28 on E501	YEL-BLK	1 on Wafer 8	18 on E501	BRN
12 on Wafer 4	49 on E501	YEL	2 on Wafer 8	17 on E501	ORN-WHT
1 on Wafer 5	12 on E501	BLK-WHT	5 on Wafer 8	62 on E501	ORN-WHT
2 on Wafer 5	11 on E501	BLK-RED	6 on Wafer 8	63 on E501	BRN
5 on Wafer 5	56 on E501	BLK-RED	7 on Wafer 8	43 on E501	ORN-WHT
6 on Wafer 5	57 on E501	BLK-WHT	12 on Wafer 8	44 on E501	BRN
7 on Wafer 5	34 on E501	BLK-RED	1 on Wafer 9	3 on Wafer 9	BLK
12 on Wafer 5	35 on E501	BLK-WHT	1 on Wafer 9	30 on E501	BLK
1 on Wafer 6	14 on E501	WHT-BLK	1 on Wafer 9*	R502	BLK
2 on Wafer 6	13 on E501	WHT-GRN	2 on Wafer 9	36 on E501	YEL
5 on Wafer 6	58 on E501	WHT-GRN	2 on Wafer 9	C502	YEL
6 on Wafer 6	59 on E501	WHT-BLK	2 on Wafer 9	K501 coil	WHT
7 on Wafer 6	38 on E501	WHT-GRN	3 on Wafer 9*	C501	BLK
12 on Wafer 6	39 on E501	WHT-BLK	4 on Wafer 9*	C501	RED
1 on Wafer 7	16 on E501	BLU	4 on Wafer 9*	R502	RED
2 on Wafer 7	15 on E501	RED-YEL	R502	K501 coil	WHT
5 on Wafer 7	60 on E501	RED-YEL	C502	31 on E501	YEL-RED
6 on Wafer 7	61 on E501	BLU	R501	28 on E501	
7 on Wafer 7	41 on E501	RED-YEL	R501	30 on E501	
12 on Wafer 7	42 on E501	BLU	29 on E501	30 on E501	

*Manually open contacts of spring switch on wafer 9 of relay K501 (fig. 5-42).

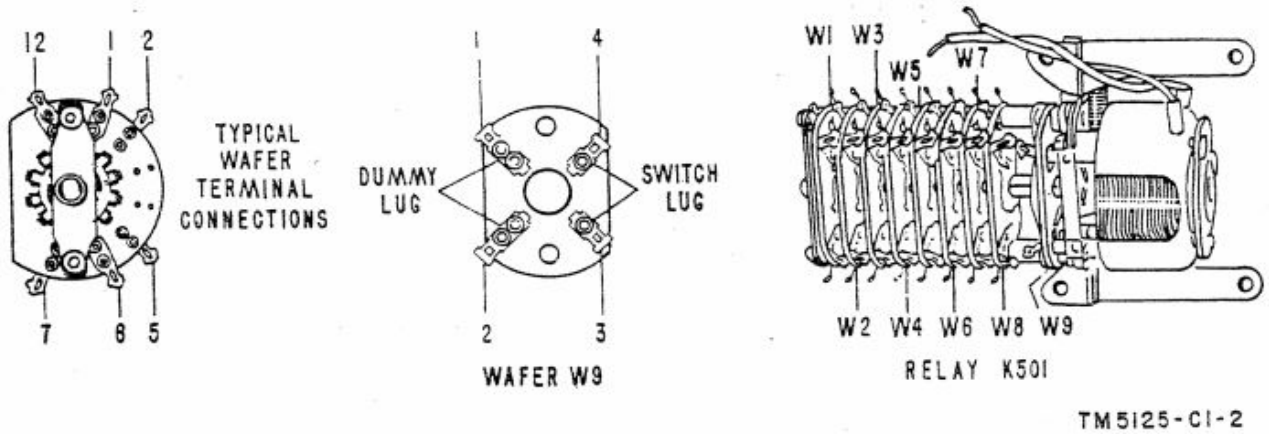

Figure 5-42. (Superseded) *Mounting base stepping relay.*

Page 118, figure 6-3. Change the call-out MOUNTING MT-273A/ARN-6 (DUAL CONTROL) OR MT-274/ARN-6 (SINGLE CONTROL) to: **MOUNTING MT-273( )/ARN-6 (DUAL CONTROL) OR MT-274/ARN-6 (SINGLE CONTROL).**

Page 119, figure 6-5. Change the call-out MOUNTING MT-273A/ARN-6 (DUAL CONTROL) to: **MOUNTING MT-273( )/ARN-6 (DUAL CONTROL).**

Page 120, figure 6-7. Delete the caption and substitute: Radio Compass Unit R-101/ARN-6 and Mounting MT-273( )/ARN-6 or Mounting MT-274/ARN-6, outline drawing.

Page 127, figure 6-17. Make the following changes:

Delete call-out 4 CLEARANCE HOLES FOR #10 SCREWS (#6 (.204) DRILL).

Change the call-out 10 CLEARANCE HOLES FOR #10 SCREWS OR BOLTS (#9 (.196) DRILL). to: **14 CLEARANCE HOLES FOR #10 SCREWS OR BOLTS (#6 (.204) DRILL).**

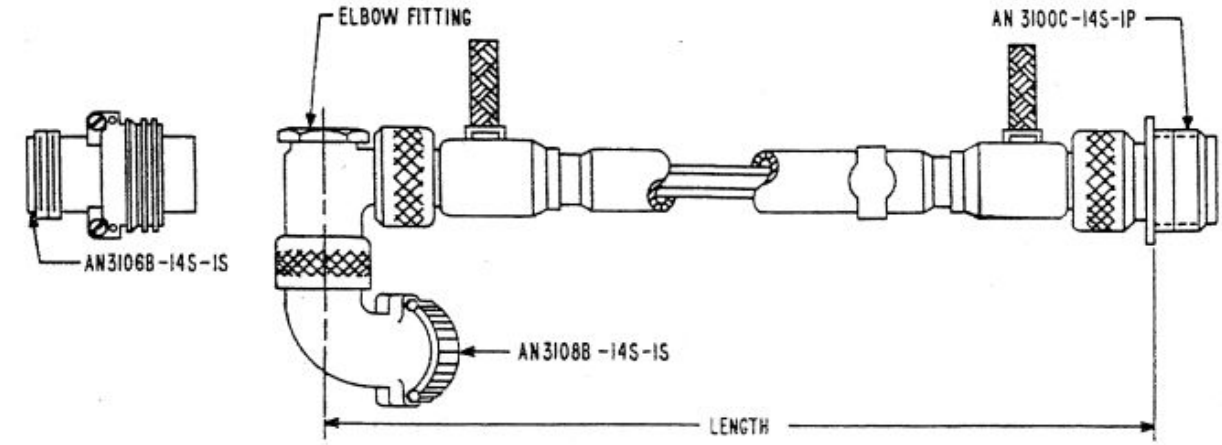

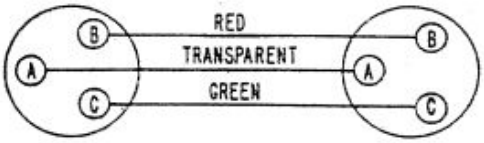

SCHEMATIC WIRING DIAGRAM

CORDS ACCORDING TO THE FOLLOWING DESCRIPTIONS ARE NON-STANDARD:

LENGTH	CONNECTOR		CORD DESIGNATION	CAPACITANCE (SEE NOTE)
	QUAN	PART NUMBER		
10-1/4 IN	1 1 1	AN3100C-14S-1P AN3108B-14S-1S ELBOW FITTING	CG-491/ARN-6	13MMF ±1.5
9FT 7-1/4 IN	1 1	AN3100C-14S-1P AN3106B-14S-1S	CG-610/ARN-6	79MMF ±4

NOTE: MEASURE CAPACITANCE AT ONE MEGACYCLE USING A MODEL 160 "Q" METER OR EQUAL. CONNECT TOGETHER AND GROUND CONTACT "A", CONTACT "C", AND SHIELD. MEASURE CAPACITANCE (C_1) BETWEEN GROUND AND CONTACT "B". CONNECT TOGETHER AND GROUND CONTACT "A", CONTACT "B", AND SHIELD. MEASURE CAPACITANCE (C_2) BETWEEN GROUND AND CONTACT "C". THE CAPACITY OF THE CABLE IS THEN EQUAL TO: $\frac{C_1 + C_2}{4}$

TM5125-C1-3

Figure 6-19.1. (Added) *Nonstandard loop cords, outline drawing.*

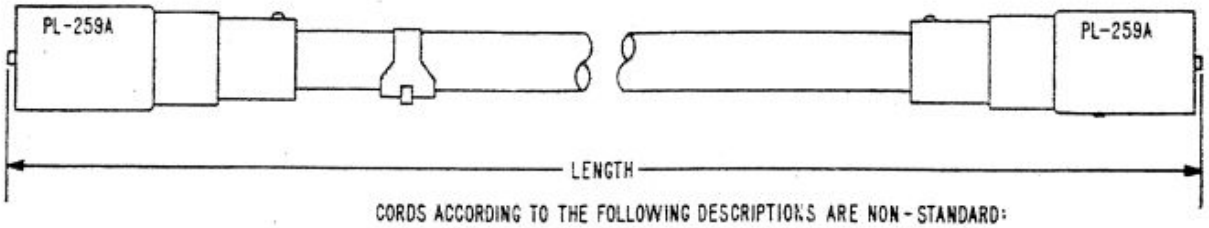

CORDS ACCORDING TO THE FOLLOWING DESCRIPTIONS ARE NON-STANDARD:

LENGTH	CONNECTOR		CORD DESIGNATION	CAPACITANCE (SEE NOTE)
	QUAN	PART NUMBER		
9FT 7-1/2 IN	2	PL-259A (SIGNAL CORPS)	CG-613/ARN-6	63MMF ± 2
1FT 3-1/2 IN	2	PL-259A (SIGNAL CORPS)	CG-614/ARN-6	10MMF ± 2

NOTE: MEASURE CAPACITANCE AT ONE MEGACYCLE USING A MODEL 160 "Q" METER OR EQUAL. GROUND OUTER CONDUCTOR AND MEASURE CAPACITANCE BETWEEN OUTER CONDUCTOR AND INNER CONDUCTOR.

TM5125-C1-4

Figure 6-19.2. (Added) *Nonstandard antenna cords, outline drawing.*

Page 129. Delete section VII and substitute:

APPENDIX

REFERENCES

The following references are available for maintenance of Radio Compass AN/ARN-6.

TM 11-2684A	Audio Oscillator TS-382A/U.
TM 11-6625-274-12 and TM 11-6625-274-35.	Electron Tube Test Set TV-7/U, TV-7A/U, TV-7B/U, and TV-7D/U.
TM 11-5527	Multimeters TS-352/U, TS-352A/U, and TS-352B/U.
TM 11-5826-201-12P	Operator's and Organizational Maintenance Repair Parts and Special Tools List and Maintenance Allocation Chart for Radio Compass AN/ARN-6.
TM 11-5826-201-35P	Field and Depot Maintenance Repair Parts and Special Tools List for Radio Compass AN/ARN-6.

Page 207, 208, figure 8-1. Make the following changes:

Column 2, RESISTORS. After R501 (item 30), add the following:

Ref.	*Value*
R502	31

Column 3, CAPACITORS. After C501 (item 7 from the bottom), add the following:

Ref.	*Value*
C502	0.1 uf

Delete E-501 (MOUNTING MT-273A/ARN-6).

Note. Number the existing note: 1.

Add the following note:

2. REFER TO FIGURE 8-1.1 FOR E-501 (MOUNTING MT-273A/ARN-6).

Caption. Change the figure caption to read: **Radio Compass AN/ARN-6, Schematic Diagram, Using Radio Compass Unit R-101/ARN-6, Less E-501 (Mounting MT-273A/ARN-6).**

Page 208A, figure 8-1A. Make the following changes:

Delete note 2 and substitute:

2. WHEN CONTROL BOX C-149/ARN-6 IS INSTALLED INSTEAD OF CONTROL PANEL C-403/A OR C-403A/A AT EITHER POSITION, THE SAME RESPECTIVE CONNECTIONS SHALL BE MADE TO TERMINALS IN MOUNTING MT-273( )/ARN-6 FOR COMPASS UNIT R-101/ARN-6, AND THE TERMINAL BOARD FOR THAT POSITION IS NOT REQUIRED.

Delete call-out *COMPASS UNIT R-101/ARN-6 AND *MOUNTING MT-273A/ARN-6 and substitute: *COMPASS UNIT R-101/ARN-6 AND *MOUNTING MT-273( )/ARN-6.

Page 209-210, figure 8-2. Make the following changes:

Delete the note and all references to it.

Change the call-out MOUNTING MT-273B/ARN-6 to: **MOUNTING MT-273( )/ARN-6.**

Page 210A-210B, figure 8-2A. Make the following changes:

E-501: Make the following changes:

Delete call-out SEE NOTE.

Change the call-out MOUNTING MT-273B/ARN-6 (SEE NOTE) to: **MOUNTING MT-273( )/ARN-6.**

Delete both notes and substitute:

NOTE

*THE VALUE OF RESISTOR R182 IS 10K ON ALL EQUIPMENTS CONTAINING SERIAL NUMBERS ABOVE 54904 ON CONTRACT AF 33(600)23961.

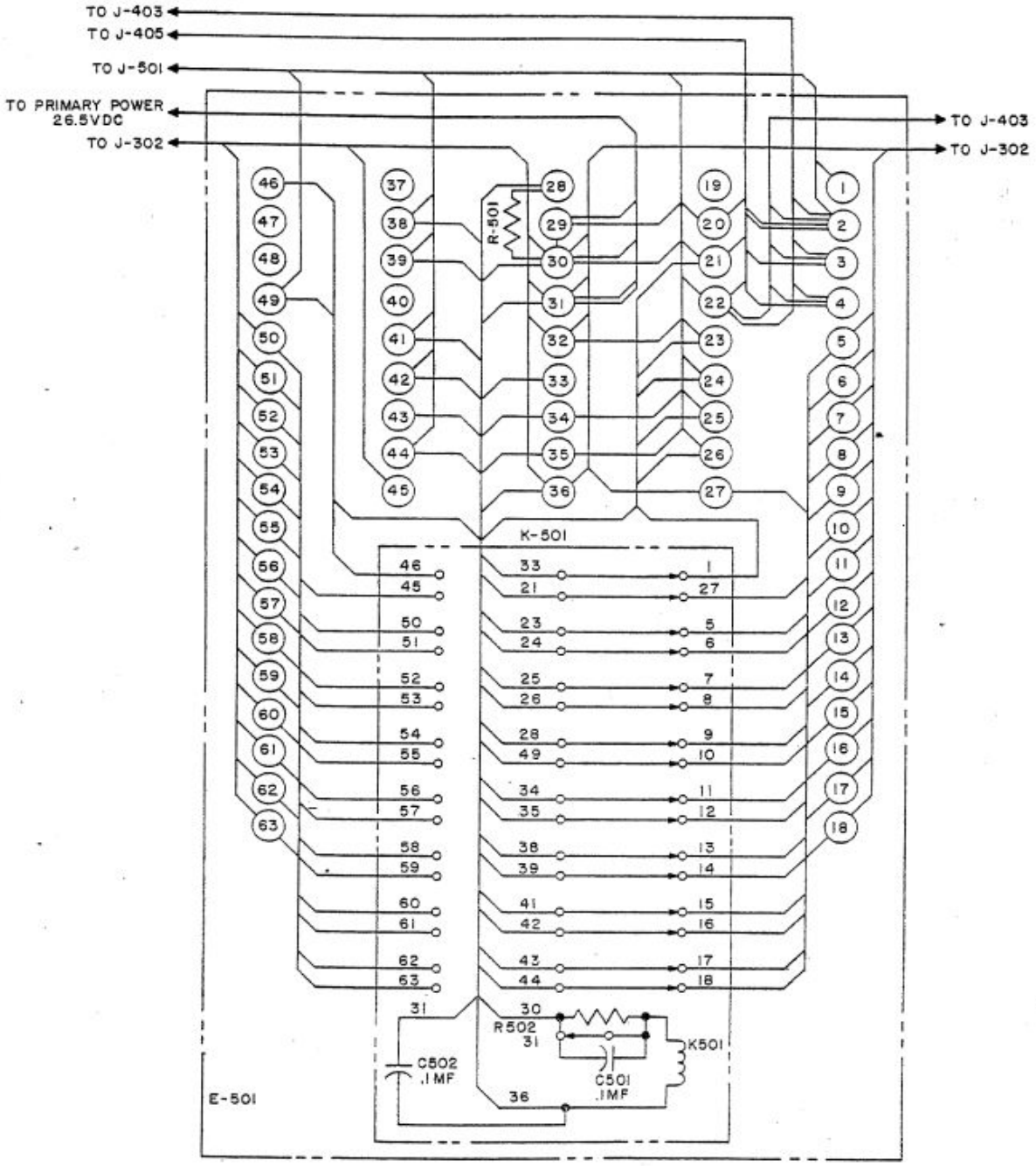

Figure 8-1.1. (Added) *Mounting MT-273A/ARN-6.*

Page 210C–210D, figure 8–2B. Make the following changes:

Delete note 5 and substitute:

5. When COURSE INDICATORS ID–250/ARN OR ID–250A/ARN (PILOT, CO-PILOT, AND NAVIGATOR) ARE INSTALLED, DELETE INDICATORS ID–90/ARN–6 OR ID–91/ARN–6 (PILOT AND NAVIGATOR) AND ASSOCIATED WIRING. REMOVE WIRE NO. 441A FROM TERMINAL NO. 22 OF THE RADIO COMPASS UNIT JUNCTION BOX IN MOUNTING MT–273( )/ARN–6. CONNECT WIRES NO. 441A, 441B, 441C, AND 441D to TERMINAL BOARD NO. 3 AS INDICATED. MAKE ALL OTHER CONNECTIONS AS SHOWN.

Change the call-out MOUNTING MT–273B/ARN–6 FOR RADIO COMPASS UNIT R–101A/ARN–6 to: **MOUNTING MT–273( )/ARN–6 FOR RADIO COMPASS UNIT R–101A/ARN–6.**

Page 214A–214B, figure 8–4A. Delete note and substitute:

NOTE

*THE VALUE OF RESISTOR R182 IS 10K ON ALL EQUIPMENTS CONTAINING SERIAL NUMBERS ABOVE 54904 ON CONTRACT AF33(600)23961.

Page 215–216, figure 8–5. Make the following changes:

Column 2, RESISTORS. After R501 (item 30), add the following:

Ref.	*Value*
R502	31

Column 3, CAPACITORS. After "C501" (item 7 from the bottom), add the following:

Ref.	*Value*
C502	0.1 uf

Delete relay circuit (P/O K501) between S301 and ground.

Note. Number the existing note: 1.

Add the following note:

2. REFER TO FIGURE 8–5.1 FOR RELAY CIRCUIT (P/O K501) BETWEEN S301 AND GROUND.

Caption. Change the figure caption to read: **Radio Compass AN/ARN–6, Functional Schematic Diagram when Using Radio Compass Unit R–101/ARN–6, less relay circuit (p/o K501) between S301 and ground.**

Page 217–218, figure 8–6. Make the following changes:

Connect top of C502 (marked terminal 36) to S301 (terminal marked 36); delete the call-out MT–273A/ARN–6 or MT–273/ARN–6 and schematic representation. Delete the call-out MT–273B/ARN–6, MT–273D/ARN–6, MT–273E/ARN–6. Delete the call-out CONNECTORS IN MOUNTINGS MT–273B/ARN–6, MT–273D/ARN–6, AND MT–273E/ARN–6 WHICH ARE NOT IN MOUNTING MT–273/ARN–6" and schematic beneath.

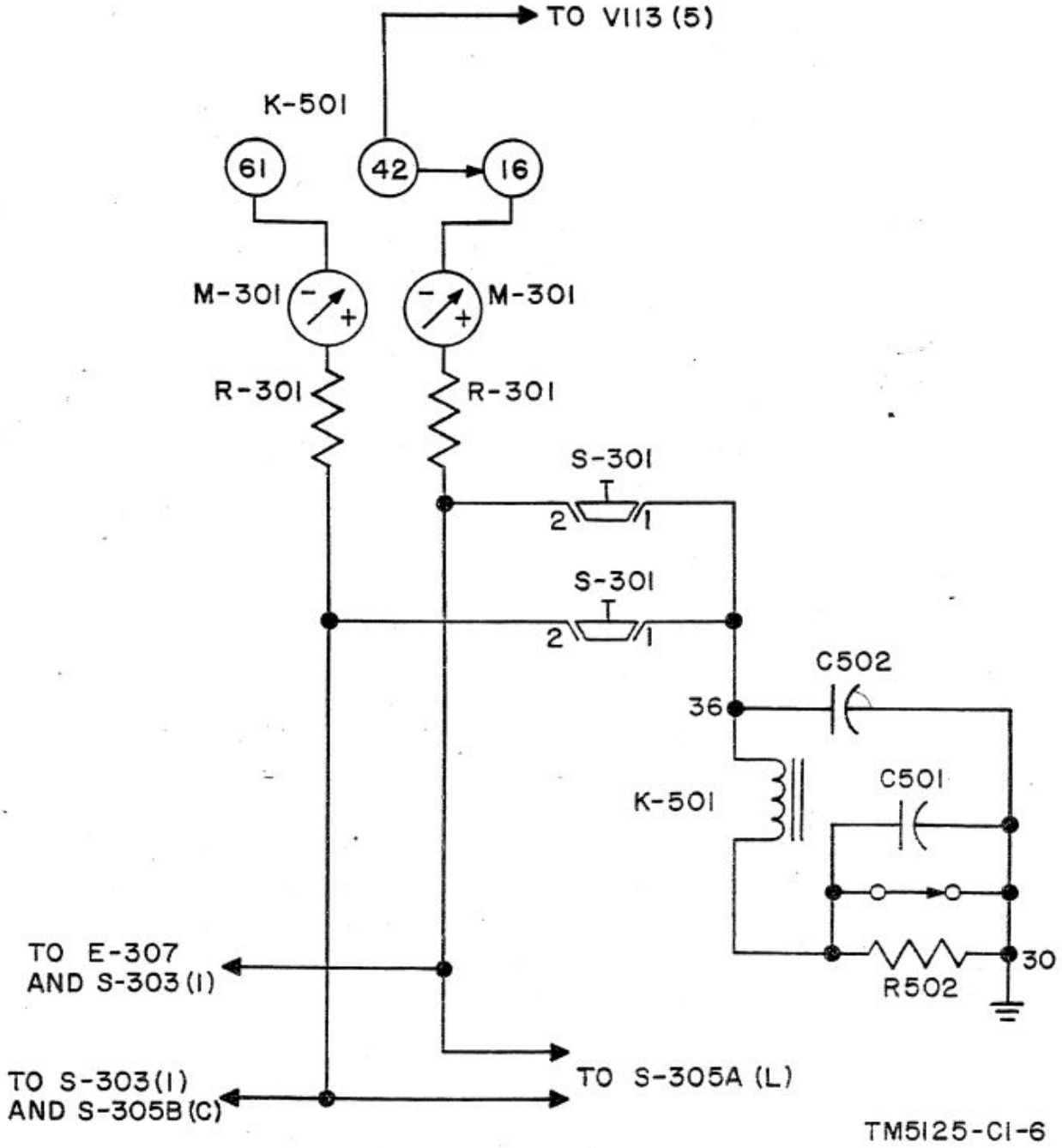

Figure 8-5.1. Part of relay K501.

By Order of *Wilber M. Brucker*, Secretary of the Army:

G. H. DECKER,
General, United States Army,
Chief of Staff.

Official:

R. V. LEE,
Major General, United States Army,
The Adjutant General.

Distribution:

Active Army: To be distributed in accordance with DA Form 12-7 requirements for TM 11 Series (unclas) plus the following:

USASA (2)	Seventh US Army (2)	11-117 (2)
Def Atomic Spt Agcy (5)	EUSA (2)	11-155 (2)
CNGB (1)	Units organized under following	11-500 (AA-AE) (2)
Tech Stf, DA (1)	TOE's:	11-557 (2)
except CSigO (18)	11-7 (2)	11-587 (2)
US ARADCOM (2)	11-16 (2)	11-592 (2)
US ARADCOM Rgn (2)	11-57 (2)	11-597 (2)
MDW (1)	11-98 (2)	

NG: State AG (3); units—same as Active Army except allowance is one copy to each unit.
USAR: None.
For explanation of abbreviations used, see AR 320-50.

U.S. GOVERNMENT PRINTING OFFICE: 1960

TECHNICAL MANUAL
NO. 11-5125

DEPARTMENT OF THE ARMY
Washington 25, D. C., 28 September 1956

RADIO COMPASS AN/ARN-6

SECTION I — GENERAL DESCRIPTION

SECTION II — INSTALLATION AND ADJUSTMENT

SECTION III — OPERATION

SECTION IV — THEORY OF OPERATION

SECTION V — MAINTENANCE

* The symbol ( ) indicates any model.

TABLE OF CONTENTS (contd)

SECTION V—MAINTENANCE (contd)

SECTION VI—SUPPLEMENTARY DATA

SECTION VII—PARTS CATALOG

SECTION VIII—DRAWINGS

TABLES

ILLUSTRATIONS

ILLUSTRATIONS (contd)

ILLUSTRATIONS (contd)

ILLUSTRATIONS (contd)

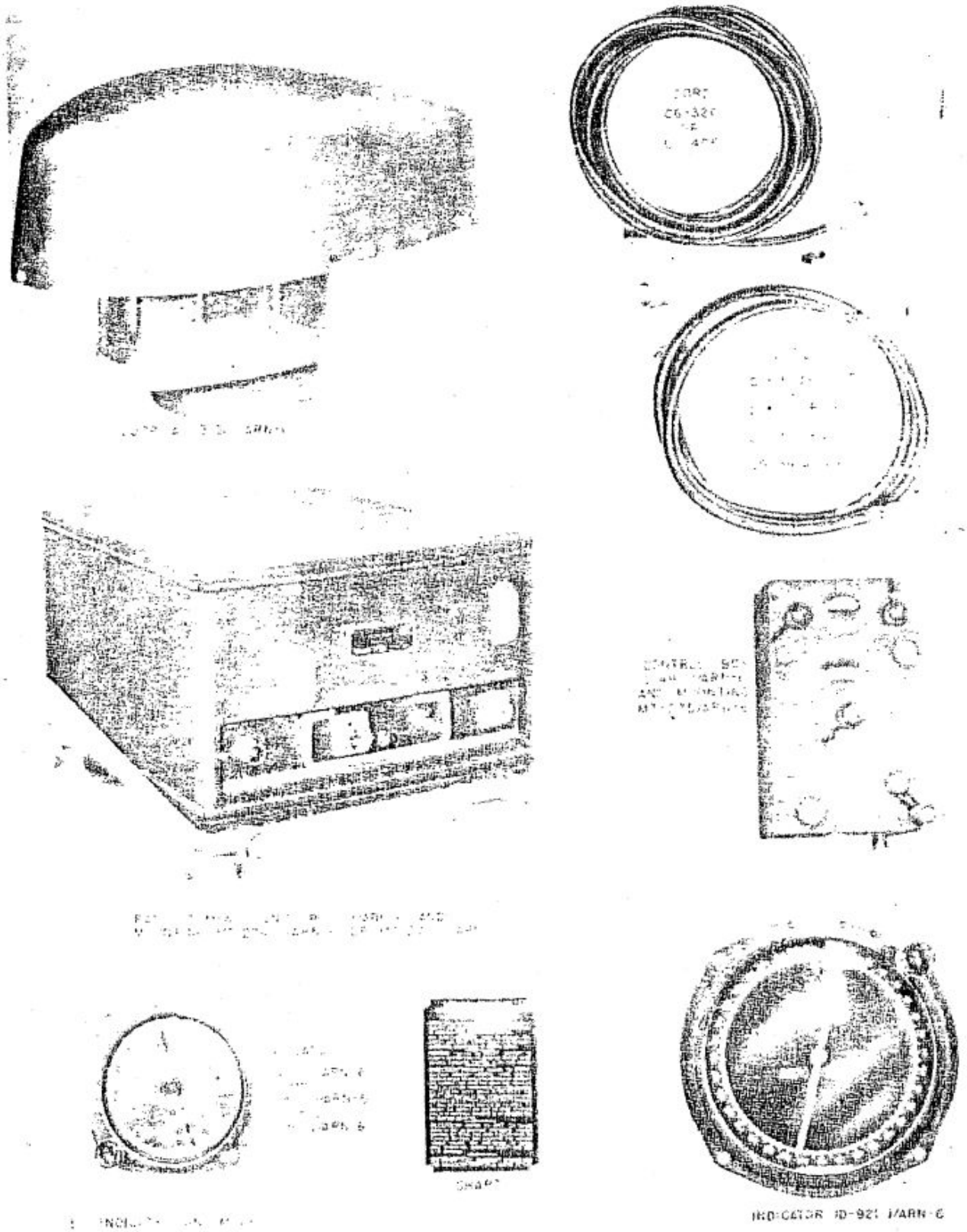

Figure 1-1. Radio Compass AN/ARN-6, Major Assemblies

IMPORTANT NOTICE

All references pertaining to installation, adjustment, and operation of Radio Compass Unit R-101A/ARN-6 also apply to Radio Compass Unit R-101B/ARN-6.

Maintenance instructions for Radio Compass Unit R-101A/ARN-6 are applicable to Radio Compass Unit R-101B/ARN-6 except that internal components of coil assemblies L101, L103, L104, L105, and L106 are not interchangeable.

SECTION I
GENERAL DESCRIPTION

1. GENERAL.

a. PURPOSE.—Radio Compass AN ARN-6 is an airborne navigational instrument. It is designed smaller and lighter than other automatic radio compass equipments for the purpose of using it in small aircraft.

b. FREQUENCY.—The equipment has a frequency range of 100 kilocycles to 1750 kilocycles covered in four bands as follows:

Band one ..... 100 to 200 kilocycles
Band two ..... 200 to 410 kilocycles
Band three ..... 410 to 850 kilocycles
Band four ..... 850 to 1750 kilocycles

c. USE.—Radio Compass AN ARN-6 is capable of providing the following:

(1) Automatic visual bearing indication of the direction of arrival of RF energy and simultaneous aural reception of modulated RF energy.

(2) Aural reception of modulated RF energy, using a non-directional antenna.

(3) Aural reception of modulated RF energy, using a loop antenna.

(4) Aural-null directional indications of the arrival of modulated RF energy using a loop antenna.

d. POWER CONSUMPTION.—Only direct current is required for the power supply. Average power required is 4 amperes at 26.5 volts DC. Operation will be satisfactory between 24 and 30 volts. It is intended that the aircraft's standard storage battery will supply the current.

2. EQUIPMENT SUPPLIED.

Equipment supplied is listed in table 1-1.

Table 1-1. Equipment Supplied

Quantity Per Installation		*Name of Unit*	*Air Force Type Designation*	*Navy Type Designation*	*Overall Dimensions (Inches)*	*Weight (Pounds)*
Single	*Dual*					
1	1	Radio Compass Unit including: one complete set of vacuum tubes installed in sockets	R-101/ARN-6 R-101A/ARN-6 or R-101B/ARN-6		15¼ x 11⅜ x 7-5/16	34.75
0	1	Mounting (Radio Compass Unit)	MT-273A/ARN-6, MT-273B/ARN-6, MT-273D/ARN-6, or MT-273E/ARN-6		17⅛ x 11-9/16 x 4	6.25
1	0	Mounting (Radio Compass Unit)	MT-274/ARN-6, MT-274A/ARN-6, MT-274B/ARN-6, or MT-274C/ARN-6		17⅛ x 11-9/16 x 4	5.19
As required	As required	Control Box	C-149/ARN-6 or C-149A/ARN-6		9 x 5 x 2⅜	3.25
As required	As required	Control Panel	C-403/A or C-403A/A	C-403/A or C-403A/A	9 x 5 x 3¼	3.12
As required	As required	Control Panel	C-758/A	C-758/A	9⅛ x 6-5/16 x 5¾	4.2
As required	As required	Control Panel	C-1514/A	C-1514/A	5¼ x 4¼ x 7	2.485
1	2	Mounting (Control Box)	MT-275/ARN-6		8⅜ x 4⅛ x 1½	0.43

Table 1-1. Equipment Supplied (Continued)

Quantity Per Installation		Name of Unit	Air Force Type Designation	Navy Type Designation	Overall Dimensions (Inches)	Weight (Pounds)
Single	Dual					
As required	As required	Indicator (Pilot's)	ID-90/ARN-6 or ID-90A/ARN-6		3¼ x 3¼ x 5-55/64	2.1
		or Indicator (Pilot's or Night Fighter)	ID-91/ARN-6, ID-91A/ARN-6, or ID-91B/ARN-6		3¼ x 3¼ x 5-55/64	2.1
		or Indicator (For 90° Mounting of Loop)	ID-231/ARN-6, ID-231A/ARN-6, ID-231D/ARN-6, or ID-231E/ARN-6		3¼ x 3¼ x 5-55/64	2.1
		or Indicator (Navigator)	ID-92/ARN-6 or ID-92A/ARN-6		5½ x 5½ x 5-29/32 5⅛ x 5⅛ x 4-19/64	3.06 2.8
1*	1*	Coupling Unit (Antenna)	CU-65/ARN-6		5 x 2-1/2 x 2-1/4	0.5
1*	1*	Coupling Unit (Antenna)	CU-65A/ARN-6		5-1/4 x 2-3/4 x 2-1/2	0.5
1	1	Cord (Loop RF) with one right angle connector	CG-131/ARN-6		72	1.31
		or Cord (Loop RF) with two right angle connectors	CG-132/ARN-6		72	1.31
		or Cord (Loop RF) with one right angle connector	CG-133/ARN-6		180	2.5
		or Cord (Loop RF) with two right angle connectors	CG-134/ARN-6		180	2.5
1	1	Cord (Antenna)	CG-405/ARN-6		72	0.62
		or Cord (Antenna)	CG-320/ARN-6		180	1.38
1	2	Chart (Operational)			4-1/2 x 6-15/16 x 1/64	.06
1*	1*	Loop (Including Cover CW-141/ARN-6).	AS-313/ARN-6 or AS-313A/ARN-6 or AS-313B/ARN-6		5-3/8 x 10-21/32 x 9-11/32†	14.0†

* In some installations these are required but not supplied.
† Not including Cover CW-141/ARN-6 which is 5-1/2" x 6-1/4" x 16-13/16". When Loop AS-313 ( )/ARN-6 is assembled in Cover CW-141/ARN-6, the complete assembly is 5-1/2" x 10-57/64" x 16-13/16" and weighs 15 pounds.

3. EQUIPMENT REQUIRED BUT NOT SUPPLIED.

Equipment required but not supplied is listed in table 1-2.

Table 1-2. Equipment Required But Not Supplied

Quantity Per Installation		Name of Unit	Air Force Type Designation	Navy Type Designation	Required Characteristics
Single	Dual				
1	2	Headset	HS-33 or HS-38 (with cord) or HS-18 or HS-23 (with cord)		
		Suitable interconnecting wiring (Air Force Specification AN-J-C48)			Necessary lengths
1	1	Coupling Unit	CU-65/ARN-6		
1	1	Loop	AS-313/ARN-6, AS-313A/ARN-6, or AS-313B/ARN-6		
1	1	Antenna			Non-directional
1	1	Power Source			26.5 volts DC
1	3	Tuning Shaft	MC-124		Necessary lengths
0	1	Coupling	MC-203A		
1	1	Plug (Loop)	AN-3106-16S-1S		
1	2	Plug (Indicator)	AN-3106-14S-2S		
1	2	Cable Clamp	AN-3057-6		
1	1	Cable Clamp	AN-3057-8		
As req'd	As req'd	Receptacle (Control Panel C-1514/A)	MRE-34S-G		
As req'd	As req'd	Tuning Meter (Control Panel C-1514/A)	EA-112		

3A. OPTIONAL EQUIPMENT.

a. CONTROL PANEL C-403A/A. *(See figure 1/1A.)* —Control Panel C-403A/A is one of a series of standardized control panels which are intended to be used in military aircraft as components of various radio installations. Control Panel C-403A/A is designed for use with Radio Compass AN/ARN-6 and provides all the functions (except headset jack) of Control Box C-149/ARN-6. It replaces Control Box C-149/ARN-6 in all aircraft having provision for its mounting and having an interphone installation or other means to provide a headset jack. Control Panel C-403A/A is designed for mounting in a channel, box, or well, provided in certain types of aircraft. It includes an internally lighted plastic panel.

b. CONTROL PANEL C-758/A. *(See figure 1-1B.)* —Control Panel C-758/A is one of a series of standardized control panels which are intended to be used in military aircraft as components of various radio installations. Control Panel C-758/A is designed for use with Radio Compass AN/ARN-6 and provides all the functions of Control Box C-149/ARN-6 and Control Panel C-403A/A. Its distinguishing features consist of the following: a protective rear cover held in position by two screws, a male connector mounted on the rear of the control panel to facilitate connection to the Radio Compass Unit, absence of a handset jack requiring the use of an interphone installation, and absence of any control for adjusting the intensity of the internally located dial and panel lights that, in effect, give ultra-violet panel illumination. Installation of this control panel requires the use of cam fastener receptacle strips assembled into the aircraft (per AND-172-69). The panel is mounted on these strips using the six cam fastener studs attached to the panel.

c. CONTROL PANEL C-1514/A is one of a series of standardized control panels intended for use in military aircraft as components of various radio installations. Control Panel C-1514/A is designed for use with Radio Compass AN/ARN-6 and operates in much the same manner as Control Box C-149/ARN-6, Control Panel C-403A/A or C-758/A. Control Panel C-1514/A is designed for flush panel mounting in certain types of aircraft. The "COMP" position of the function switch on the control box and control Panel C-403A/A or C-758/A is identified as "ADF" on Control Panel C-1514/A. (In this handbook, this position of the function switch is referred to as the "COMP-ADF" position.)

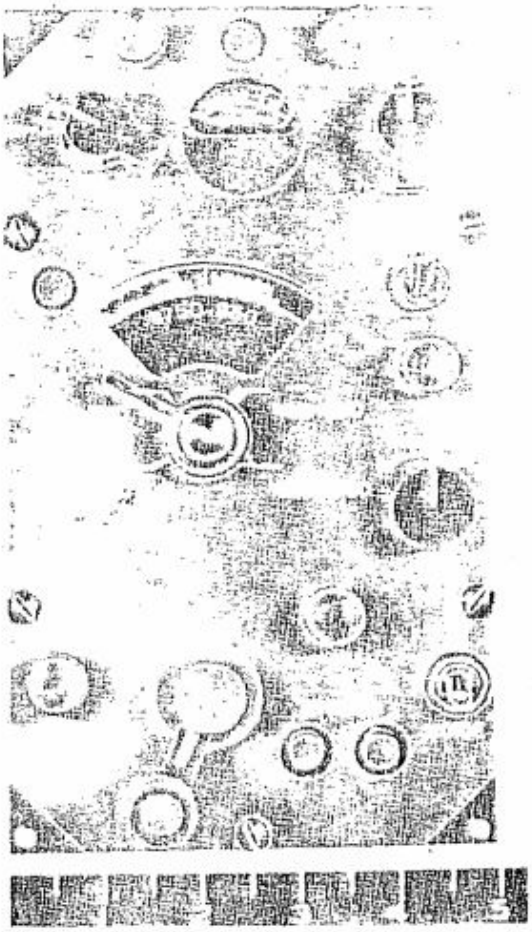

Figure 1-1A. Control Panel C-403A/A

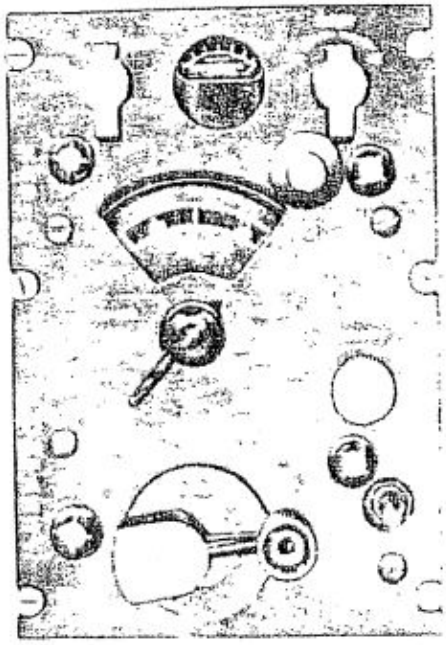

Figure 1-1B. Control Panel C-758/A

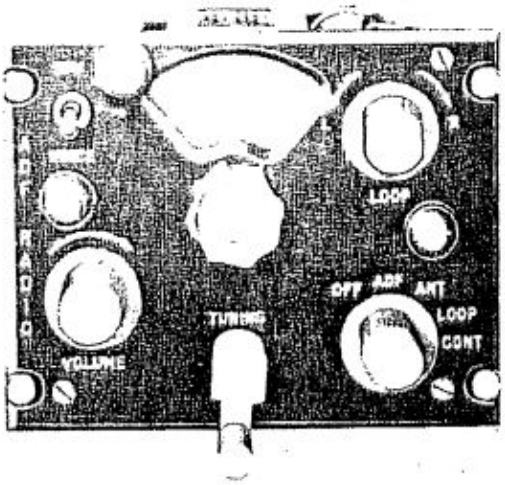

Figure 1-1C. Control Panel C-1514/A

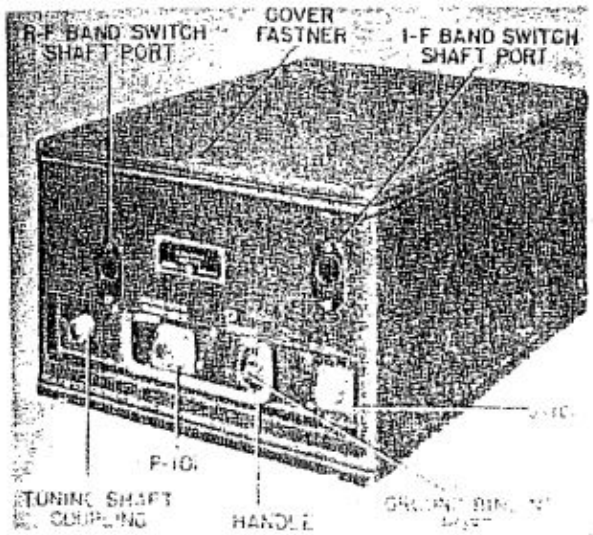

Figure 1-2. Radio Compass Unit R-101/ARN-6 or R-101A/ARN-6

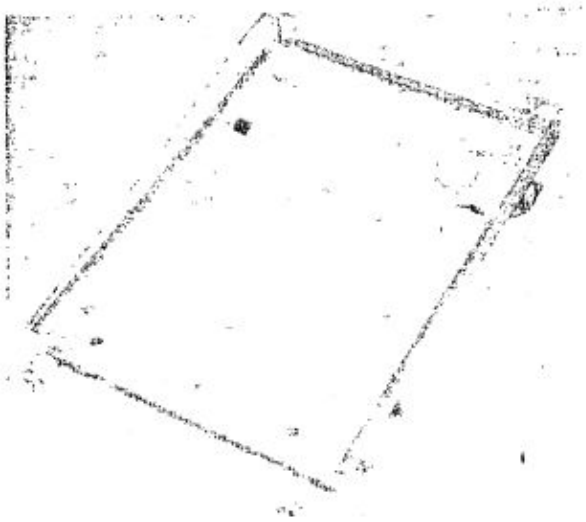

Figure 1-4. Mounting MT-273( )/ARN-6 or MT-274( )/ARN-6

4. DESCRIPTION OF MAJOR ASSEMBLIES.

a. RADIO COMPASS UNIT R-101 ARN-6 AND R-101A ARN-6. *(See figure 1-2.)*—The radio compass unit is contained in a rectangular shaped aluminum housing with removable top and bottom covers. Attached to the top cover is a spare vibrator. A recess in the front panel contains the connectors for the loop cable and antenna transmission line, a "GROUND" binding post, the tuning shaft fitting, and a carrying handle. A recess in the rear panel contains a male contact connector strip which fits into a female connector strip in the mounting. *(See figure 1-3.)* Included within the radio compass unit are the circuit elements which make up the compass circuit, a superheterodyne receiver circuit, the automatic loop control circuit, the vibrator power supply circuit, and necessary circuits to provide for accurate tuning and aural identification of unmodulated radio stations.

b. MOUNTING MT-273( )* ARN-6. *(See figures 1-4 and 1-5.)*—Mounting MT-273( ) ARN-6 is an aluminum frame, shock mounted, with a built-in junction board and control switch relay at the base. A female connector strip located in the back of the mounting is used for making electrical connections with a similar connector strip on the back of the radio compass unit as it is slid into the mounting. Two locking knobs on the front of the mounting are used to

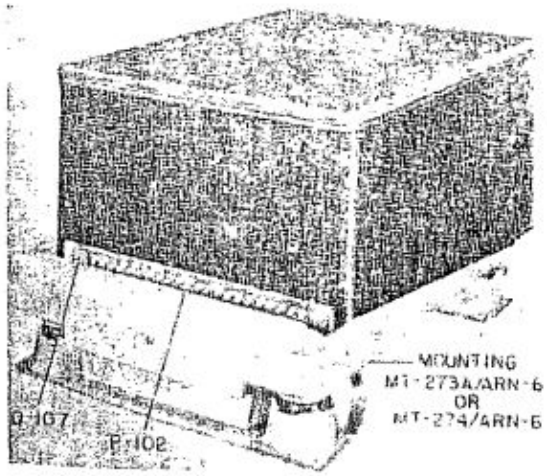

Figure 1-3. Radio Compass Unit R-101/ARN-6 or R-101A/ARN-6, Rear View

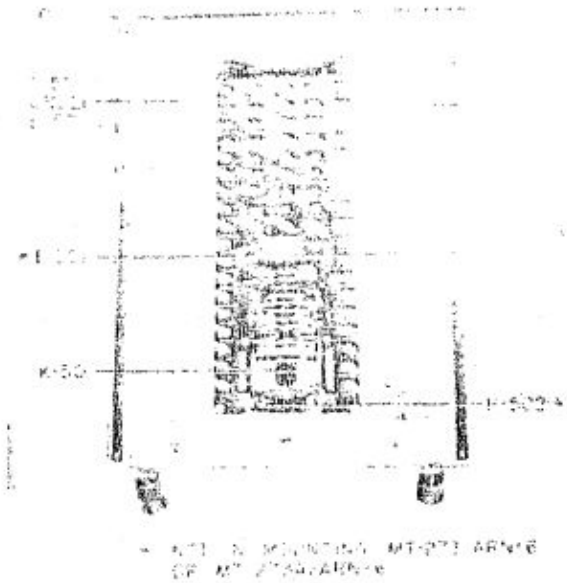

Figure 1-5. Mounting MT-273( )/ARN-6 Cover Plate Removed

* The symbol ( ) indicates any model.

lock the radio compass unit in place. The junction board provides for electrical interconnection of the various components. The relay transfers control from one control box to the other.

c. MOUNTING MT-274( )/ARN-6.—Mounting MT-274( )/ARN-6 is identical to mounting MT-273( )/ARN-6 except that the control relay is not included, as this mounting is used for single remote control installation.

d. CONTROL BOX C-149/ARN-6 AND C-149A/ARN-6. *(See figure 1-6.)*—Control Boxes C-149/ARN-6 and C-149A/ARN-6 are rectangular shaped aluminum boxes with the necessary circuit elements and controls to provide complete remote control of the radio compass. For control from either of two positions, two control boxes are installed. The front panel contains the following: "OFF-COMP.-ANT.-LOOP" function switch, tuning meter, "LOOP L-R" switch, "LIGHT" control, dial, band switch, "CONTROL" switch, "TUNING" crank, "AUDIO" control, "CW-VOICE" switch, and "SPARE" bulb. Located on the end adjacent to the "AUDIO" control are the phone jack, and the flexible tuning shaft fitting. All electrical connections are made by a male connector located on the bottom of the control box. This male connector fits into a similar female connector located in the Control Box Mounting MT-275/ARN-6. The control box is held in the mounting by four captive screws.

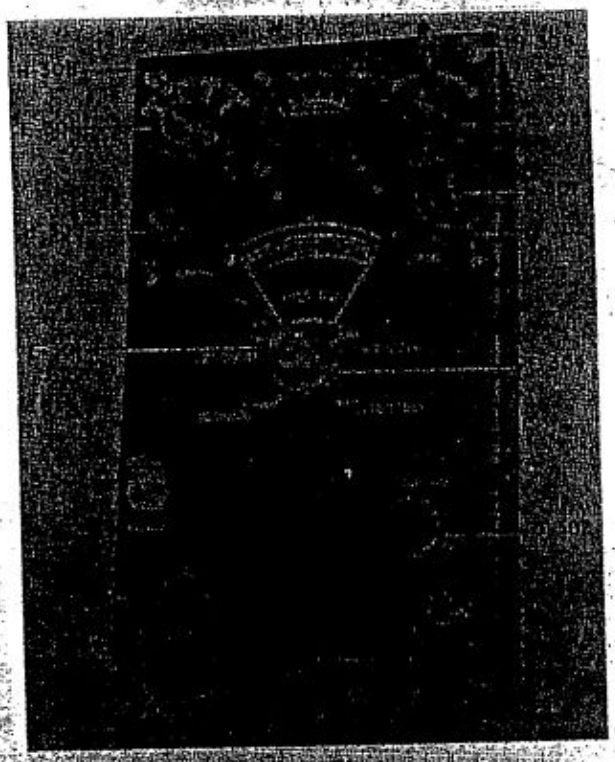

Figure 1-6. Control Box C-149/ARN-6 or C-149A/ARN-6

e. MOUNTING MT-275/ARN-6. *(See figure 1-7.)*—Mounting MT-275/ARN-6 is a rectangular shaped aluminum box with an open top into which the control box mounts. A female connector provides electrical connections between the control box male connector plug and the interconnecting cables which enter through an opening in the bottom end of the mounting. Four holes are provided for attaching the mounting to the structure of the aircraft.

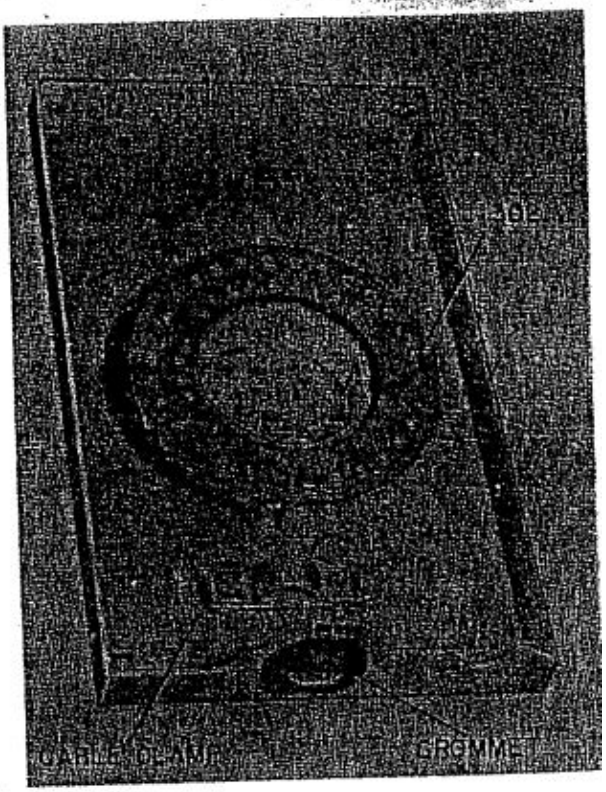

Figure 1-7. Mounting MT-275/ARN-6

f. LOOP AS-313/ARN-6, AS-313A/ARN-6, AN AS-313B/ARN-6. *(See figure 1-8.)*—Loop AS-313 ARN-6, AS-313A/ARN-6, or AS-313B/ARN-6 is a iron core loop of nine turns, electrically center-tappe by means of a shunt coil of twelve turns and electr statically shielded. The loop, in operation, is rotat by the drive motor through a reducing gear train. compensator, which can be adjusted externally, is ut ized to correct for radio compass deviation errors. A autosyn transmitter is geared through the compensat to the rotatable loop and supplies loop position info mation to the remote indicator system. The loop designed for mounting through the skin of the a craft. The entire loop unit is hermetically sealed a filled with dry nitrogen. It cannot be opened witho special equipment.

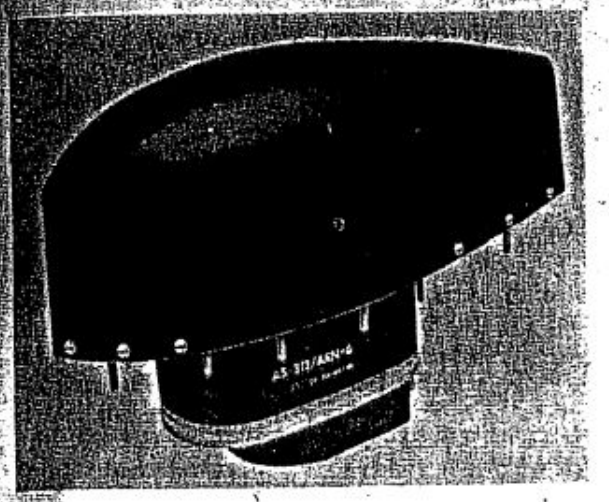

Figure 1-8. Loop AS-313/ARN-6, AS-313A/ARN-6, or AS-313B/ARN-6

g. INDICATOR ID-90( )/ARN-6 (Pilot's). *(See figures 1-9 and 1-10.)*—Indicator ID-90( )/ARN-6 (Pilot's) is an autosyn driven device. It indicates the angular position of the autosyn transmitter located in the loop and gives the bearing of a radio transmitter when the loop is graduated every two degrees with every 30 degree graduation indicated by the proper numeral. The azimuth scale of the indicator may be manually rotated by means of the "VAR" knob located on the front of the indicator.

h. INDICATOR ID-231( )/ARN-6.—Indicator ID-231( )/ARN-6 is identical to Indicator ID-90( )/ARN-6 except that the pointer is set to read 270 degrees when the dial on the loop reads zero. This is to provide that correct bearing may be read on this indicator when the loop is mounted perpendicular to (the normal) fore-and-aft line of the aircraft.

i. INDICATOR ID-91( )/ARN-6 (Pilot's Night Fighter).—Indicator ID-91( )/ARN-6 (Pilot's Night Fighter) is identical to Indicator ID-90( )/ARN-6 except for the luminescent materials used on the pointer and numerals.

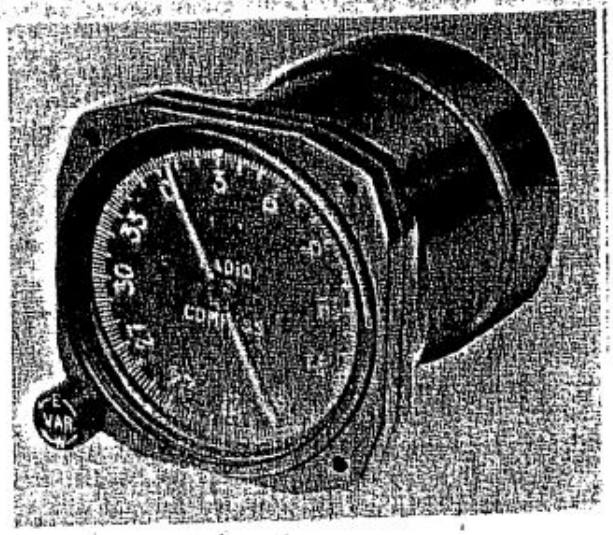

Figure 1-10. Indicator ID-90A/ARN-6, ID-91A/ARN-6, ID-231A/ARN-6, ID-231D/ARN-6, or ID-231E/ARN-6

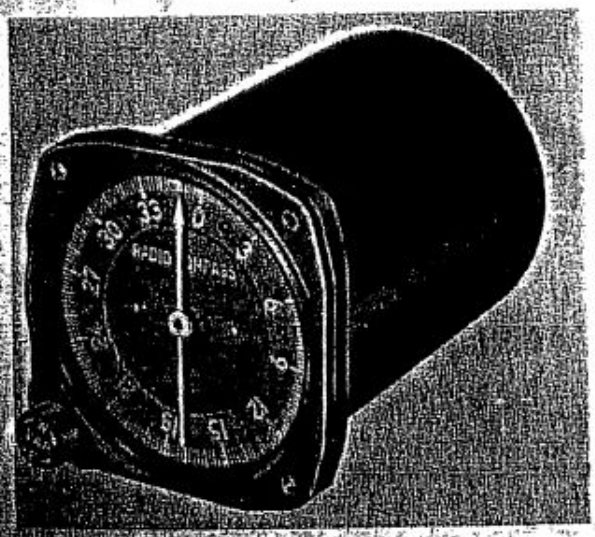

Figure 1-9. Indicator ID-90/ARN-6, ID-91/ARN-6, or ID-231/ARN-6

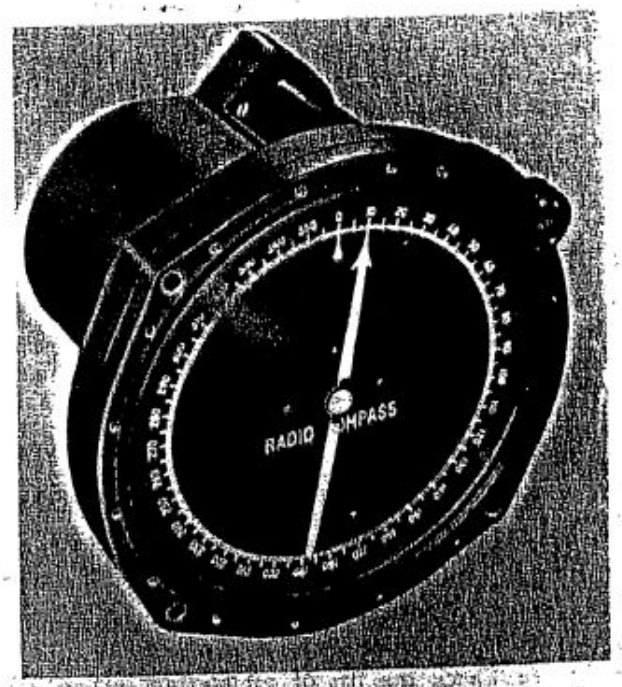

Figure 1-11. Indicator ID-92/ARN-6 or ID-92A/ARN-6

j. INDICATOR ID-92/ARN-6 AND ID-92A/ARN-6 (NAVIGATOR'S). *(See figure 1-11.)*—Indicator ID-92/ARN-6 or ID-92A/ARN-6 (Navigator's) is an autosyn driven device similar to ID-90/ARN-6 or ID-90A/ARN-6 with the exception that a larger scale is used. The scale is graduated every degree and in addition every 10-degree graduation is indicated by the proper numeral. The azimuth scale may be manually rotated by means of a "VAR" knob located on the front of the indicator.

k. COUPLING UNIT CU-65/ARN-6. *(See figure 1-12.)*—Coupling Unit CU-65/ARN-6 is a small streamlined enclosure attached to a rain-tight mounting plate which mounts on the skin of the aircraft. The coupling unit provides a female connector for the antenna transmission line and an antenna input terminal. Electrically the unit provides circuit connection between the antenna and the transmission line.

kA. COUPLING UNIT CU-65A/ARN-6 is a ruggedized version of Coupling Unit CU-65/ARN-6 and has identical mountings and couplings. *(See Figures 1-12.)*

l. CONTROL PANEL C-403A/A. *(See figure 1-1A)*—Control Panel C-403A/A is similar to Control Box C-149/ARN-6 except that it is a flat panel assembly for flush mounting and has no headset jack. Headset operation is to be provided through the aircraft interphone facilities. All electrical connections are made by a wiring harness included as part of the unit. The following controls are included: "OFF-COMP.-ANT.-LOOP-CONT." function switch, tuning meter, "LOOP L-R" switch, "LIGHTS HI-OFF-LO" switch, dial, bandswitch, "TUNING", crank, "VOLUME" control, "CW-VOICE" switch, and two "SPARES" bulbs for the instrument lights. The plastic panel is internally illuminated by five lights AN3502. No spare lamps are provided for the panel lights.

m. CONTROL PANEL C-758/A. *(See figure 1-1B.)*—Control Panel C-758/A is similar to Control Box C-149/ARN-6 except that Control Panel C-758/A has no headset jack. Headset operation is to be provided through the aircraft interphone facilities. All electrical connections are made by means of a cable with a socket insert assembly plug connecting to a male connector in the rear of the control panel. The following controls are included: a five-position function switch marked "OFF-COMP.-ANT.-LOOP-CONT.", tuning meter, "LOOP L-R" switch, bandswitch, "TUNING" crank, "VOLUME" control, "CW-VOICE" switch, and one dial lamp. The plastic panel is internally illuminated by four lights (AN-3140-327). No spare lamps are provided on the panel.

n. CONTROL PANEL C-1514/A is similar to Control Panel C-403A/A or C-758/A in operation except that Control Panel C-1514/A has no tuning meter. Terminals for connection of an external tuning meter are provided for on the MRE-34P-G plug at rear of control panel. All electrical connections for Control Panel C-1514/A are terminated at this plug. The following controls are included on Control Panel C-1514/A: "OFF-ADF-ANT-LOOP-CONT" function switch, "LOOP L-R" switch, dial, bandswitch, "TUNING" crank, "VOLUME" control and the "CW-VOICE" switch. The plastic panel is internally illuminated by two lights, AN-3140-327. No spare lamps are provided on this control panel.

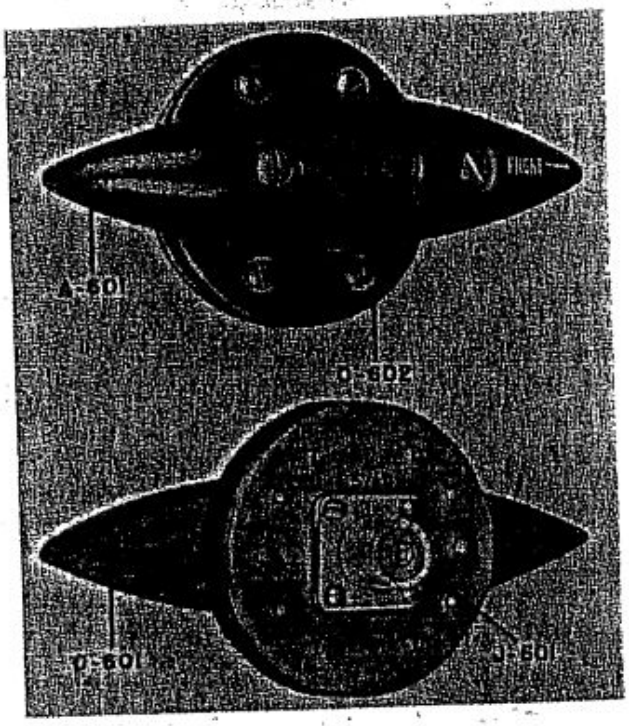

Figure 1-12. Coupling Unit CU-65/ARN-6 or CU-65A/ARN-6

SECTION II

INSTALLATION AND ADJUSTMENT

1. INSTALLATION.

a. PRELIMINARY PROCEDURE.

(1) UNPACKING.—Carefully unpack the equipment and make the following checks:

(a) Check the list of components against the components received.

(b) See that all components are in good condition.

(c) Remove top and bottom covers of Radio Compass Unit R-101/ARN-6 or R-101A/ARN-6 and inspect for damage. Make certain the tubes are firmly seated in their respective sockets.

(d) Some loops have moisture indicators, whereas others do not. Check the color of the moisture indicator in the top of the loop dome (if Loop AS-313/ARN-6 is used). A dark blue color indicates dryness—the correct condition. A light blue or pink indicates

that there is a leak in the assembly. If a leak is indicated, the loop must not be used.

(e) Some indicators, have moisture indicators, whereas others do not. Check the color of the moisture indicator in the indicators (if Indicator ID-90/ARN-6, ID-91/ARN-6, ID-92/ARN-6, or ID-231/ARN-6 is used). The moisture indicator is located on the center of the pointers and should be dark blue.

(2) PRE-INSTALLATION BENCH TEST.—This test is to establish whether the assemblies are in working order on delivery to the personnel who make the installation.

(a) Choose a clear location, at least 200 feet away from metallic frame buildings, hills, power lines, railroads, or other large electrically conductive objects.

(b) For the first installation at a field or base, the mountings of the assemblies should be attached to wooden frames to form a test set-up. The test set-up should be kept if more than one installation is to be made.

(c) Arrange a non-directional antenna so that it is at least 3 feet away from the loop.

(d) To connect the assemblies together refer to figure 2-13, which shows that two cords are furnished and that five additional cables must be made up. Complete information for making these cables is shown in figures 6-1, 6-2, 6-3, 6-4, 6-5, and 6-6. Follow instructions given in section II, paragraph 1*c*.

(e) Place a Control Box C-149/ARN-6 in each mounting and attach with its four captive screws.

(f) Place Radio Compass Unit R-101-ARN-6 or R-101A/ARN-6 in its mounting and slide it along carefully so that the contact pins enter the receptacle. Lift and then tighten the thumb nuts.

(g) Then, guided by figure 2-13, install the cords and cables.

(h) Connect tuning shafts between Radio Compass Unit R-101/ARN-6 or R-101A/ARN-6 and Control Boxes C-149/ARN-6 or C-149A/ARN-6 as shown in figure 2-13. Turn the "TUNING" crank in a counterclockwise direction until the stop is reached, which indicates the maximum capacity of the tuning capacitor. Uncouple the tuning shafts at the control boxes and set their dials to the "ALIGN" mark which appears on the low frequency end of the 850 to 1750-kilocycle band. Reconnect the tuning shafts without disturbing the alignment. Turn both "TUNING" cranks to check for freedom of operation.

(i) Perform an operational test as follows:

1. Turn the function switch to "COMP-ADF" position and let the equipment warm up for 15 minutes.

2. Plug a headset into a control box. Tune in several stations in each band. If possible, pick stations at both extremes of the "TUNING" crank travel so that the entire range of the variable tuning capacitor is used.

3. When tuned to a station whose geographical location is known, turn the loop's front directly toward it. The indicators should then read 0 degrees plus or minus 3 degrees. Also, as other stations are tuned in, make sure the indicator pointers shift to a new relative bearing.

4. With a station tuned in, change the function switch to "LOOP" position. Then use the "LOOP L-R" switch. This will rotate the loop away from the station's bearing. The tuning meter should drop away from "MAX." twice in 360 degrees rotation of the loop. Direction and speed of the loop's rotation is controlled by direction and amount of "LOOP L-R" switch rotation, respectively.

5. Change the function switch to "ANT." position and check operation of equipment on all bands. In "ANT." position the loop and indicators are inoperative.

6. On dual control installations check the "CONTROL" button for taking and releasing control from each control box. Make sure all controls are operating properly from each control box.

7. To check the "CW-VOICE" switch place it in "CW" position. In "COMP-ADF" operation a 900-cycle tone will be heard along with the station modulation. In "LOOP" or "ANT." operation, a beat frequency note will be heard as the station is tuned in.

8. After the equipment has operated for 20 minutes or more, check operation of a headset at both control boxes. While making this test, jar or vibrate the equipment cables and cords. Any increase in noise, clicks, or intermittent reception will require a thorough investigation and removal of the cause. Noisy vacuum tubes and faulty soldering of wires in the cables are the most common sources of trouble.

9. As true operating characteristics appear after 20 minutes use, all tubes should now be tested on a tube tester. Replace any tube that is under its specified performance. Place tubes back in their respective sockets, making sure they are firmly seated.

10. Check all lamps and vibrators, both operating and spares.

(j) Check loop compensator as follows:

1. Remove the loop housing in order to see the loop scale (see figure 2-1). Use the "LOOP L-R" switch and rotate the loop to 15 degrees as indicated on the loop scale. Adjust the "VAR" knob on the indicator until the azimuth zero is at the index. Check the indicator pointer reading, which should be 15 degrees if the loop compensator is adjusted for zero correction. Rotate the loop to 45 degrees as indicated on the loop scale and again check the indicator reading. Repeat this check in 30-degree steps for one complete rotation of the loop.

2. If calibration data is available for an identical installation in the particular type of aircraft concerned, set up the correction in accordance with section II, paragraph 2*b*(3).

3. If no calibration data is available the compensator must be set for zero correction.

b. INSTALLATION OF COMPONENTS.

(1) MOUNTING MT-273( )/ARN-6 OR MT-274( )/ARN-6 (RECEIVER).—In a location allowing clearance specified in figure 6-7 or 6-8, attach mounting MT-273( )/ARN-6 for dual control installation or mounting MT-274( )/ARN-6 for single control installation. Use 16 No. 8-32 screws of a required length to secure it.

Notes

If the mounting is attached to a non-metallic surface, make a good ground connection to the metal structure of the airplane.

In some installations it may be necessary to attach all the cable wires to the terminal board in the mounting prior to installation in the aircraft.

(2) MOUNTING MT-275 (CONTROL BOX).—In installing Mounting MT-275/ARN-6 either one or two mountings will be used depending on whether single or dual control is desired. Use four No. 6-32 screws. See figures 6-9 and 6-10 for overall dimensions and clearances. Mount an operational chart next to each control box in a position easily readable.

Note

If the mounting is attached to a non-metallic surface, make a good ground connection to the metal structure of the airplane.

(2A) CONTROL PANEL C-403A/A OR C-758/A.

(a) LOCATION.—A channel, box, or well is provided in all aircraft in which the use of Control Panel C-403A/A is intended. This location has been chosen with all necessary considerations of accessibility, visibility, and clearances. Where Control Panel C-758/A is to be installed, cam fastener receptacle strips assembled into the aircraft (per AND-17249) are required.

(b) PREPARATION. — Mount suitable terminal strips on the subsurface behind the channel box or well provided in the aircraft fuselage. Wire these terminals to mounting MT-273( )/ARN-6 or MT-274 ( )/ARN-6. (No terminal strips are required in the installation of Control Panel C-758/A.) *(See figures 6-3 and 6-5).*

CAUTION

The components on the rear of Control Panel C-403A/A are not protected against breakage caused by rough handling during installation. After installation they are protected by their inaccessibility. Use care in handling prior to and during installation or removal. Control Panel C-758/A affords greater protection to its rear components by being equipped with a rear cover.

(c) COUPLING BLOCK. — The tuning shaft coupling block may be oriented at thirty degree intervals to permit alignment of the tuning shaft. Determine the optimum direction for the tuning shaft, remove the three screws holding the coupling block assembly, rotate the block to the preferred direction, and replace the three screws *(See figures 6-10A and 6-10B).* Check the gear mesh for smooth action with minimum backlash while tightening the screws. Coupling MC-136 may be added when sharp bends in the tuning shaft cannot be avoided by orientation of the coupling block.

(d) CONNECTIONS.—Carefully support the control panel to avoid damage to its components, and connect the wiring harness to the terminal strips. Connection from Control Panel C-758/A to the Radio Compass Unit mounting is made directly by means of a cable, no terminal strips are used. One end of the cable is plugged into J-101 of the Control Panel, and the other end is attached to the respective binding posts on the junction board of the Radio Compass Unit mounting. *(See figures 6-3 and 6-5.)* Connect the tuning shaft to the coupling block, being sure that the "ALIGN" mark on the control panel dial coincides and lines up with the dial index when the stop (in the receiver unit) is reached. *(See paragraph 1b(6), this section.)*

(e) INSTALLATION. — Install the control panel in the channel, box, or well, being extremely careful not to damage any parts, particularly the edges of the dial and dial mask. See that the edges of the dials are not pinched between the panel and the mounting surface. Fasten the control panel into place with four assembly screws, one at each corner of the panel. Control Panel C-758/A is mounted on cam fastener receptacle strips using the six spiral cam fastener studs assembled with the panel.

(2B) CONTROL PANEL C-1514/A.

(a) LOCATION.—A well is provided in all aircraft in which the use of Control Panel C-1514/A is intended. This location has been chosen with all necessary considerations of accessibility, visibility, and clearances.

(b) PREPARATION.—Connect receptacle MRE-34S-G to plug MRE-34P-G on rear of Control Panel C-1514/A. The cable from this receptacle should be wired to mounting MT-273( )ARN-6 or MT-274( )ARN-6.

(c) A coupling MC-136-A that may be orientated to provide optimum direction of the tuning shaft is provided on the rear of Control Panel C-1514/A.

(d) CONNECTIONS.—Connect the receptacle and cable assembly from the mounting to the terminal plug on the rear of Control Panel C-1514/A. Connect the tuning shaft to the coupling, taking care that the "ALIGN" mark on the control panel coincides and lines up with the dial index when the stop (in the receiver unit) is reached *(See Paragraph 1.b.(6), this Section).*

(e) INSTALLATION.—Mount the control panel in the well provided, securing the panel with the fasteners provided in each corner. Use care to avoid damaging exposed parts on the back of the panel.

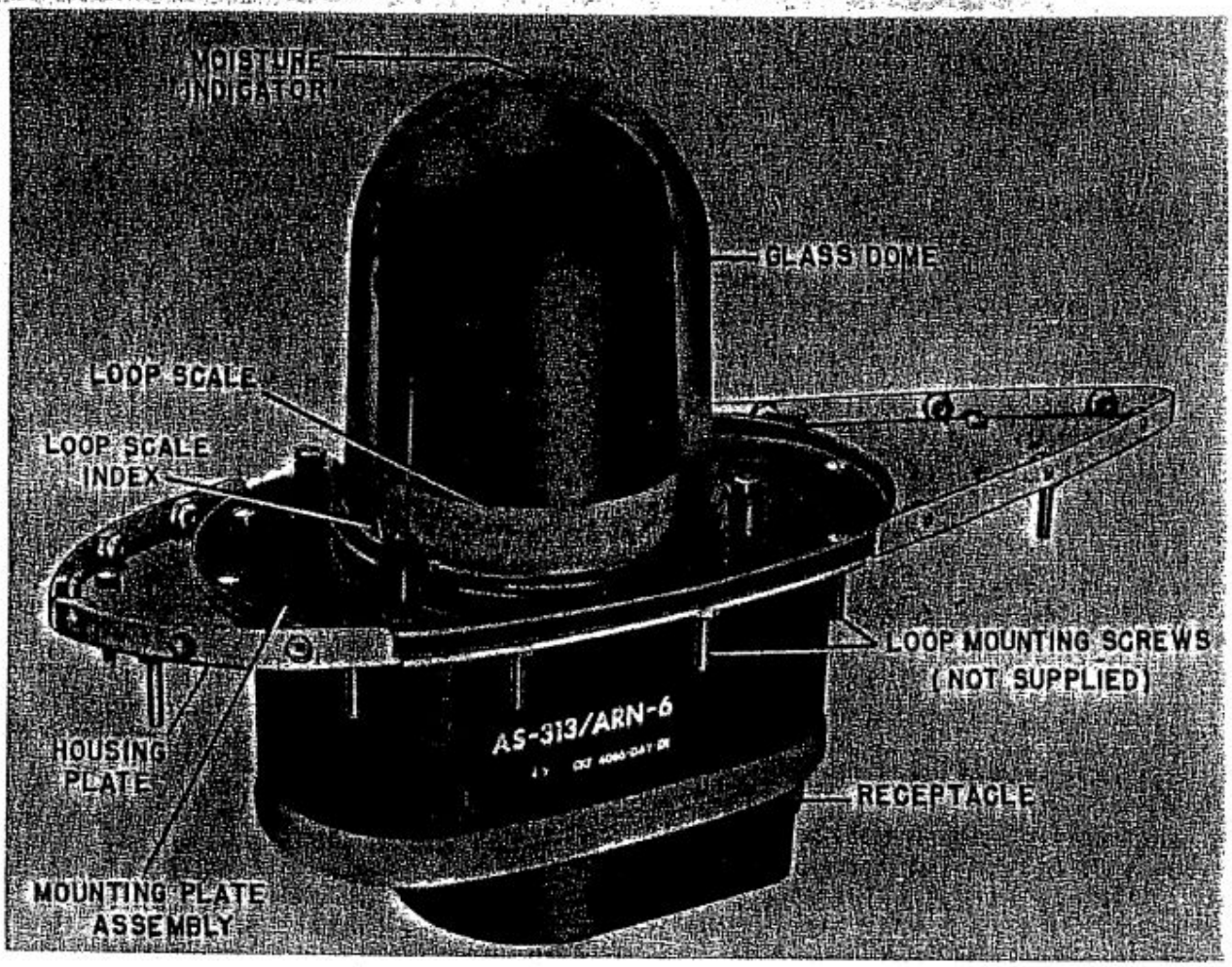

Figure 2-1. Loop AS-313( )/ARN-6, Housing Removed

(3) LOOP AS-313/ARN-6, AS-313A/ARN-6, OR AS-313B/ARN-6.

(a) LOCATION.—Mount the loop on the fore-and-aft centerline of the fuselage if Indicator ID-90( )/ARN-6, ID-91( )/ARN-6, or ID-92( )/ARN-6 is used. (When the loop must be mounted perpendicular to this fore-and-aft centerline, Indicator ID-231( )/ARN-6 is required). The loop must be mounted in a position as far as practicable from sources of engine interference, metal masses, and conductors. In determining the location consider the space necessary both inside and outside of the fuselage, structural requirements, lengths of cables, location of the radio compass unit and effect on operation and maintenance of the aircraft. Also, choose the mounting location to provide a balanced quadrantal error curve. When making a belly mount, do not fasten the loop to a primary structural member, since, in event of a landing gear retracted, the aircraft might be damaged beyond repair. Areas affecting safety in flight should not be obstructed and operation and maintenance of the aircraft should not be affected by the loop or associated equipment. Mount the loop so it will be level during normal flight. In wooden planes the loop may be mounted in protected positions inside the plane. In such cases the housing is not required.

(b) INSTALLATION.—Four holes are provided for holding the housing plate to the skin of the aircraft while mounting the loop (see figure 2-1) and ten holes are provided for the actual fastening of the loop and housing plate to the aircraft (see figure 6-17). A hole must be cut in the skin to accommodate the base of the loop, which projects into the fuselage about 5 inches. The housing is placed over the projecting glass dome and fastened to the housing plate by means of 12 screws. Two gaskets are supplied (see figure 2-2), one to go between the loop mounting plate and the housing plate, and the other to go between the housing plate and the skin of the aircraft. These gaskets are intended to prevent water, dirt, etc., from entering the fuselage. In locating the mounting holes for the No. 10 mounting screws, the fore-and-aft holes must be exactly in line with the center-line of the fuselage (within 0.25 degrees). In some cases the loop may be mounted slightly to one side of the center-line, but the axis of the housing must still be parallel to the center-

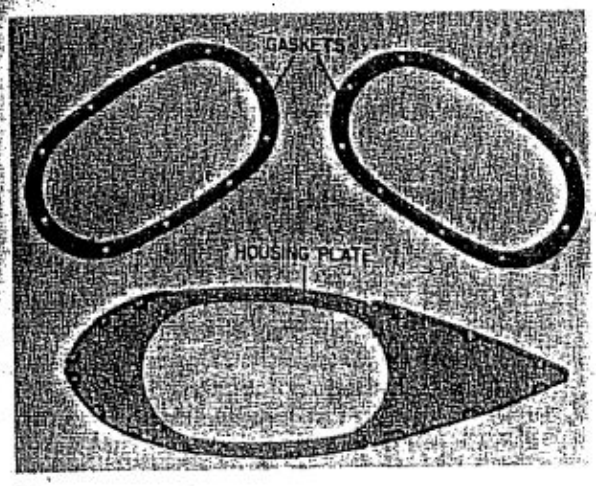

Figure 2-2. Loop AS-313( )/ARN-6, Housing Plate and Gaskets

line of the fuselage. The broad end of the housing must face forward.

(c) AZIMUTH SCALE.—The azimuth scale on the compensator is different for top mountings and belly mountings. Both scales are engraved on one dial, in black for top mountings and in red for belly mountings. The dial on the loop itself is similarly marked with two scales—one black and one red. The loop mechanism is completely sealed and is filled with dry nitrogen at about 1/2 atmosphere (about 7 pounds per square inch). No precautions are therefore necessary to exclude moisture or dirt and no inspection or servicing is possible, beyond compensation adjustment and a check of the cable connections.

(4) INDICATORS ID-90( )/ARN-6, ID-91( )/ARN-6 ID-231( )/ARN-6, OR ID-92( )/ARN-6.—Installation of the indicator should be within reach of the pilot or navigator and where its bearing scales can be fully seen. Follow figure 6-11 or 6-12 for dimensions of holes to be cut and drilled for the pilot's Indicator ID-90( )/ARN-6 or ID-231( )/ARN-6. Follow figure 6-13 for installation of navigator's Indicator ID-92( )/ARN-6. Use three No. 8-32 screws for mounting each indicator. If the installation is in a night fighter airplane the night type of pilot's Indicator ID-91( )/ARN-6 with luminescent markings is used. Installation dimensions are the same as indicated in figure 6-11 or 6-12.

Note

If the indicators are not mounted on a shock absorbing panel, a shock mount must be used.

(5) COUPLING UNIT CU-65/ARN-6 or CU-65A/ARN-6.—Installation requires that a hole be cut in the skin of the airplane. (See figure 2-3.) Figure 6-14 gives the dimensions. Use No. 6-32. screws. The coupling unit must be located so that it can be connected to the receiver unit by either the 72 inch or 180 inch cord. It also must be located near the non-directional antenna lead-in.

(6) INSTALLATION OF TUNING SHAFTS.

(a) On single control installations select a tuning shaft of sufficient length, so that it may be securely mounted. Where bends are necessary the radius should be as large as practicable and in no case less than 6 inches. When the receiver and control box are finally in their mountings, connect the shaft to the control box and receiver unit and turn the "TUNING" crank counterclockwise until the stop is reached. Uncouple the shaft from the control box and set its dial to the "ALIGN" position, which appears at the low frequency end of the 850-1750-kilocycle band. Connect the shaft again without disturbing the position of the dial.

(b) On dual control installations, it is necessary to use three tuning shafts and Coupling MC-203-A, which is shown in figure 6-15. Locate the Coupling MC-203-A at some point between the Compass Receiver R-101/ARN-6 or R-101A/ARN-6 and the two Control Boxes C-149/ARN-6 or C-149A/ARN-6. Use four No. 8-32 screws and attach the coupling firmly to the structure of the airplane. When the receiver and control boxes are finally in their mountings, connect a tuning shaft between the center fitting of the coupling and the receiver. Connect tuning shafts from both control boxes to Coupling MC-203-A. Turn a "TUNING" crank in a counterclockwise direction until the stop is reached. Uncouple the tuning shafts from both control boxes and set the dials to the "ALIGN" mark, which appears at the low frequency end of the 850-1750-kilocycle band. Reconnect the shafts without disturbing the dials' positions. Turn both "TUNING" cranks to prove freedom of operation.

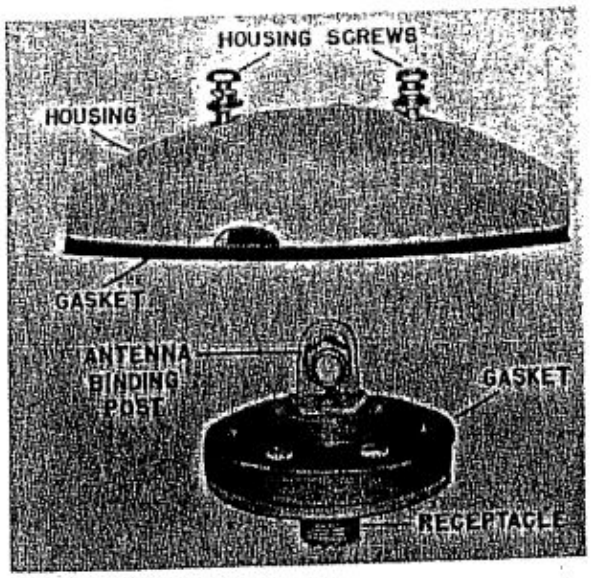

Figure 2-3. Coupling Unit CU-65/ARN-6, or CU-65A/ARN-6 Housing Removed

c. CORDING.

(1) GENERAL.—Interconnecting cables must be made up; five are required for a dual control installation and three are required for a single control installation. Cables pass through grommets in the receiver mounting and fasten to binding posts on the junction board. All cables needed are shown together in the cording diagrams (see figure 2-12 for single control and figure 2-13 for dual control installations). Determine lengths necessary. Follow figures 6-1, 6-2, 6-3, 6-4, 6-5, and 6-6 for details. Remove the connector ring in the control box mountings to get access to the back terminals. Replace connector ring and put the clamp over the cable when soldering is completed.

Note

Control Panel C-758/A is a self-contained unit with all its electrical connections terminating in a receptacle jack J-101 at the rear of the panel. Connections to binding posts on the junction board of the receiver mounting are made directly by means of a cable, one end of which plugs into J101 and the other terminates at the various binding posts of the receiver. The cording diagrams pertain to installation of both control box and control panel.

(2) MAKE-UP OF CABLES.—Plugs and wiring should be installed according to instructions for particular aircraft. (Refer to the Handbook of Instructions for Airplane Designers and to the installation drawings.) To prevent the ferrule from rubbing the insulation, the wires should be bundled and taped, or wrapped with cord for about 2 inches back from the plug. In soldering wires to the plug terminals, use the following method:

(a) Remove the cable clamp and adapter from the plug housing to gain access to the terminals.

(b) Remove the insulation from the individual wires for a distance of 3/16-inch and tin the ends of the wires.

(c) Run all wires through the cable clamp and adapter.

(d) Slip a 3-8-inch length of spaghetti tubing on each wire, but leave the tinned ends clear.

(e) Tin the cups of the terminals, being careful not to spill solder on the phenolic body.

(f) Solder each wire to its terminal. Use sufficient solder to fill the cups. Test each terminal to be sure that the joint is secure.

(g) Make sure that each terminal is in its proper place in the plug body and that the spaghetti tubing is pushed down over the soldered joint.

(h) Replace the adapter and cable clamp and tighten clamp screws enough to secure cable.

(3) Connections of cables 1, 3, and 5 to the junction board must be varied slightly from what is shown in figures 6-1, 6-3, and 6-5 unless both the loop and the antenna are located on the top side of the airplane. Table 2-1 shows what connections are transposed for different locations of the loop and antenna. In the first two columns pick the arrangement of loop and antenna being used and read across. Exchange the positions of wires as indicated. This will make the loop turn in the proper direction when controlled by the "LOOP L-R" switch, and the indicator pointers will read properly instead of being reversed 180 degrees.

Note

In order to apply table 2-1 to installation of Control Panel C-758/A, substitute the letters d and B (corresponding to pins on J-101 of Control Panel C-758/A) for lead designations W and X respectively.

Table 2-1. Junction Board Connections for Various Mountings of Loop and Antenna Connections to Junction Board for Dual Remote Control

Location of Loop on Aircraft	*Location of Non-directional Antennas*	*Cable 1*		*Cable 3*	*Cable 5*
TOP	TOP	C to 4 B to 3	E to 20 F to 2	W to 13 X to 14	W to 58 X to 59
BOTTOM	BOTTOM	C to 3 B to 4	E to 20 F to 2	W to 14 X to 13	W to 59 X to 58
TOP	BOTTOM	C to 4 B to 3	E to 2 F to 20	W to 14 X to 13	W to 59 X to 58
BOTTOM	TOP	C to 3 B to 4	E to 2 F to 20	W to 13 X to 14	W to 58 X to 59
FOR SINGLE REMOTE CONTROL					
TOP	TOP	C to 4 B to 3	E to 20 F to 2	W to 13 X to 14	
BOTTOM	BOTTOM	C to 3 B to 4	E to 20 F to 2	W to 14 X to 13	
TOP	BOTTOM	C to 4 B to 3	E to 2 F to 20	W to 14 X to 13	
BOTTOM	TOP	C to 3 B to 4	E to 2 F to 20	W to 13 X to 14	

(4) Cable 6 consists of four wires, two for each lead, to reduce drop in power input. At the airplane's fuse box this cable must have a 10-ampere fuse.

(5) Interphone connection for dual control installation is made by bringing the "high" side of the interphone circuit to junction board binding post 30. For a single control installation with Mounting MT-274 ( )/ARN-6, connect the "high" side to binding post 17 and the ground side to 30.

Note

If the interphone system is connected to the compass equipment, removal of the headset plug, at the control box having control, connects the audio output of the compass to the input of the interphone equipment. Then the audio level to the interphone is controlled by the "AUDIO" control on the compass control box. In Control Panel C-403A/A, C-758/A or C-1514/A the interphone connection is permanent.

(6) Marker beacon connections can be made at junction board binding post 31 for +A, and to terminal 29 for ground.

(7) For cords 1 and 2 either the 72 inch or 180 inch lengths can be used, with either straight or right angle connectors, depending on the condition. (See figures 6-18 and 6-19.)

Note

Do not cut these cords. Their exact lengths are required. Cord 1 has bonding braid on its connectors which must be grounded to the receiver "GROUND" post at one end and to the metal structure of the airplane on the other end.

(8) Install Radio Compass Receiver R-101/ARN-6 or R-101A/ARN-6 by carefully sliding it into the mounting and tightening the thumb nuts.

(9) Slide each Control Box C-149/ARN-6 or C-149A/ARN-6 into its mounting so that the pins enter the sockets. Tighten the four captive screws.

(10) Clamp cables, cords, and tuning shafts into spaces that will not interfere with the airplane control or with any other equipment or instruments. Cables and tuning shafts attached to Radio Compass Receiver R-101/ARN-6 or R-101A/ARN-6 should be unsupported for a distance of 2 feet from the unit and should have enough slack so they will not interfere with the shock mounting.

d. AFTER-INSTALLATION TESTS.

After Radio Compass AN/ARN-6 has been installed in the aircraft, make the following tests before placing the equipment in service.

(1) INITIAL CHECKS.

(a) Before turning on Radio Compass AN/ARN-6, check the battery voltage and polarity at the junction board in the receiver mounting. Terminal 31 should be connected to the positive side of the aircraft DC power supply. A voltage check may be made from terminal 31 to 30 or ground.

(b) Check all the equipment for security of mounting. Check the tightness of all plugs. Make certain all cords and cables are securely in place and that the ground braids on the loop cord are bonded to the aircraft structure at the loop end and to the receiver "GROUND" post at the receiver end.

(c) Check the vacuum tubes and vibrator to make certain they are securely seated in their sockets.

(d) Test the operation of the tuning shafts and Coupling MC-203-A; inspect the connections at both control boxes or panels. The "ALIGN" mark on both control boxes should coincide and line up with the dial index when the stop is reached.

(2) OPERATIONAL TESTS.—If the installation is for dual control the following checks should be made from each control box or panel.

(a) Turn the function switch to "COMP-ADF."

(b) Push the "CONTROL" button and check to see that control of the equipment is transferred from one control box to the other. At Control Panel C-403A/A, C-758/A or C-1514/A turn the function switch to "CONT" and return to "COMP-ADF."

(c) Using headset check the operation of the "VOLUME" control to see that it properly controls headset volume.

(d) While listening with headset, jar Radio Compass Unit R-101/ARN-6 or R-101A/ARN-6 to check possible noise or intermittent reception.

(e) With the function switch in "ANT." check operation of equipment on all four bands. Switch "CW-VOICE" switch to "CW" and check the operation of the beat frequency oscillator.

(f) Switch to "LOOP" and check reception on all bands. Check the operation of the "LOOP L-R" switch. Direction and speed of loop rotation, as indicated by the indicator pointers, are controlled by direction and amount of "LOOP L-R" switch rotation respectively.

(g) Park the aircraft in an area at least 200 feet away from metallic frame buildings, hills, power lines, railroads, or other large electrically conductive objects. Swing the heading of the aircraft so that it points exactly toward a transmitting station. Turn the function switch to "COMP." and tune the equipment to this station. The indicator pointer should swing to zero index within 2 degrees. The accuracy of this zero bearing will depend upon the following:

1. The accuracy with which the fore-and-aft line of the aircraft was aligned with the direction of the transmitting station.

2. The accuracy with which the loop mounting base was aligned with the fore-and-aft line of the aircraft.

3. The amount of distortion in the direction of arrival of radio waves caused by unsymmetrical location of the loop in relation to the physical makeup of the aircraft and accessories.

Note

An error less than 5 degrees will not be serious if the cause of this error can be definitely shown to be the result indicated in paragraph 3 above. In these cases the error results from the particular aircraft installation and can be corrected when the radio compass deviation is applied to the compensator (see section II, paragraph 2.*b*). If the indicator pointer swings to 180 degrees instead of 0 degree, the sensing is not correct. It can be corrected by connecting components properly. [See section II, paragraph 1.*c*(3).]

(b) Swing the heading of the aircraft approximately 15 degrees to the right of the original heading. The indicator pointer should swing to about 345 degrees. A reading of 15 degrees instead of 345 degrees indicates improper connection of components for the location of loop and antenna in this installation. [See section II, paragraph 1.*c*(3).]

2. ADJUSTMENT.

a. RADIO COMPASS DEVIATION CALIBRATION.

(1) It will be necessary to check the direction of radio bearings every 15 degrees from the fore-and-aft axis of the aircraft in order to determine and compensate for deviations caused by distortion of the radio field pattern due to wings, engines, propellers, antennas, and other parts of the aircraft.

Note

It is important that no compensation shall be present in the loop at the time the calibration is made. Make a check to be certain that there is no compensation. If compensation is present, remove it prior to the calibration. [See section II, paragraph 1.*a*(2)*(j)*.]

(2) The calibration may be made on the ground for installations in which the loop is on top of the airplane; however, for installations with the loop beneath the fuselage, the use of the flight method is necessary if accuracy is to be obtained. Since ground methods require more time and more personnel and do not obviate the necessity for checking in the air, they will not be discussed in detail. Calibration data may be obtained in flight by the following method: (All radio bearings are to be read on Indicator ID-92/ARN-6 or ID-92A/ARN-6 (if possible) for these checks.)

(a) Select a medium or high-powered radio station between 25 and 100 miles distant from the locality at which the test is to be conducted. The radio station selected should not be in a congested channel or in a channel where high-powered adjacent channel signals can, by slight mistuning, cause bearing errors. The station should normally provide good bearings with little or no fluctuation of the indicator pointer.

(b) Select a day when the wind is less than 8 miles per hour in order to avoid excessive drift angles and when the air is smooth to avoid errors in reading the bearing angles. Do not make the calibration within 2 hours of sunrise or sunset or when wide fluctuations of bearings are noted.

(c) Using the "VAR" knob on indicator (ID-92/ARN-6 or ID-92A/ARN-6 if available) set the azimuth scale zero to the index.

(d) Select a landmark or series of landmarks (such as a road, railroad tracks, section lines, etc.) which will provide a direct line toward the radio station. Since power lines or railroads on or adjacent to the landmark can distort the radio path, make a check to determine whether or not distortion is present. This can be done by crossing the reference line at various angles while maintaining fixed courses by means of the directional gyro. If the bearing changes rapidly as the line is approached, distortion is present and should be eliminated by flying at greater elevation, or by selecting a new reference landmark.

(e) With the aircraft in level flight, fly along this reference line at an altitude low enough to avoid parallax error. If the airplane has a drift meter installed, it can be used to ensure that the direction of flight is parallel to, or directly over, the reference line. Set the directional gyro at zero. When passing over some predetermined point or intersecting line to the reference, record simultaneously the indicator (ID-92/ARN-6 or ID-92A/ARN-6 if available) bearing and the directional gyro reading. Also record the drift meter reading if a drift meter is being used. The above readings, if the previous setting and the line of flight have been maintained, should be zero. This maneuver, as well as those discussed in the following steps, are indicated by figure 2-4. In practice it will be found practicable to have the copilot use figure 2-4 to direct the pilot, thereby aiding him in flying the indicated flight pattern.

(f) Turn the aircraft to the left and then swing back to the right, crossing the reference line at an angle of 15 degrees by the directional gyro. Swing far enough out on these maneuvers to regain level flight some distance before the reference line is reached. Headings should be made only during conditions of level flight. The instant the aircraft crosses the reference line, observe the radio compass bearing and record this bearing in column 3 on figure 2-5. For those installations having a drift meter, greater accuracy can be obtained, since the drift meter observer can determine the exact moment of crossing the reference, and the heading at the exact flight position can be determined.

(g) Repeat the above procedure throughout step 1 of figure 2-4, recording the data in the third column of figure 2-5; return on the reference line as shown in step 2. The directional gyro should be set each time a new step is begun.

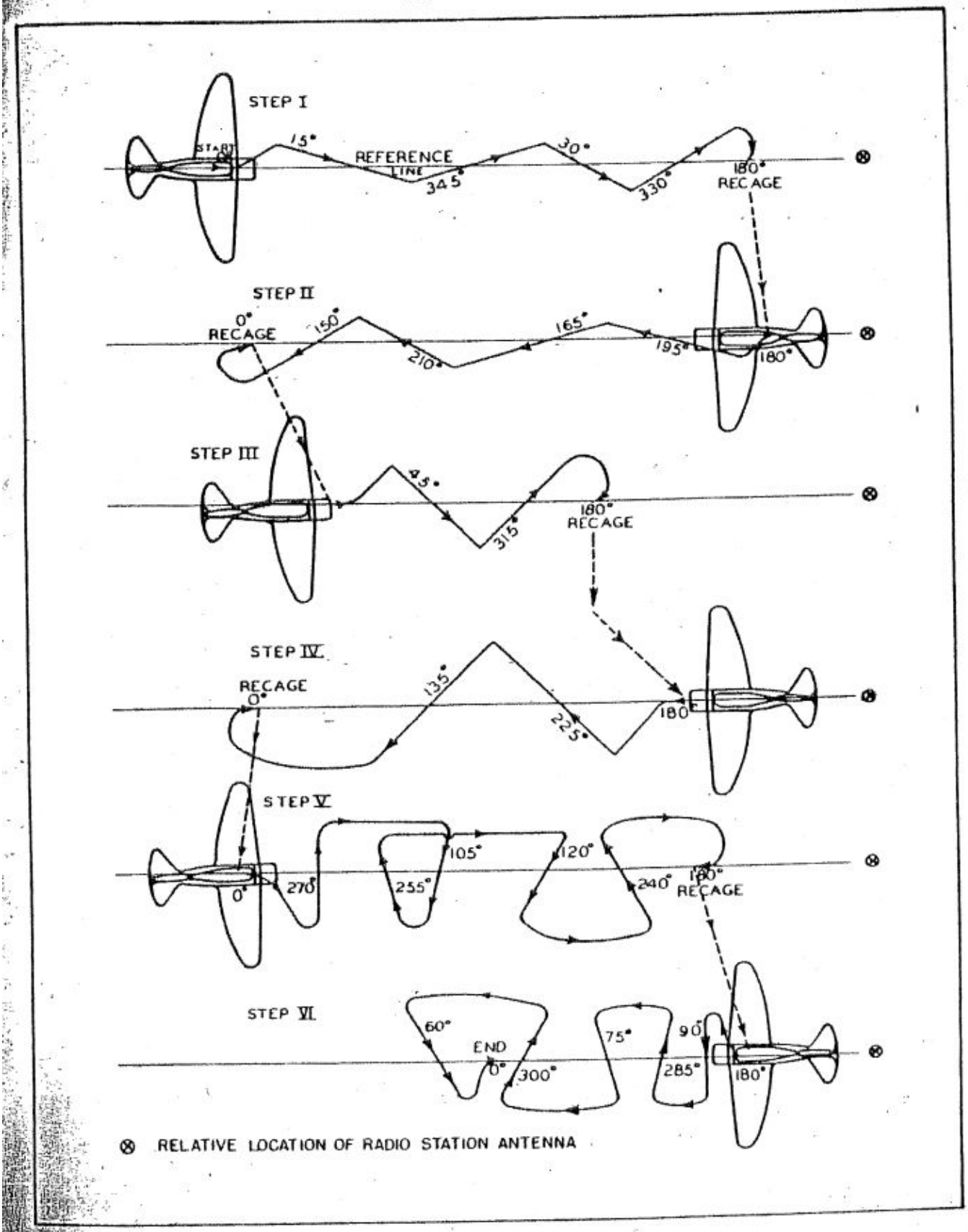

Figure 2-4. Procedure for Obtaining Radio Compass Deviation in Flight

NOTE: Head toward station over predetermined point on reference line, steady, set GYRO on 0° and check zero bearing.

Station Used _____
Frequency _____
Plane No. _____
Pilot _____
Recorder _____

Flight Test Data for Curve			Compensator Adjustment Data	
Column #1	Column #2	Column #3	Column #4	Column #5
Gyro Bearing	Plane to Radio Station Bearing	Indicated Bearing	Loop Scale Reading	Compensator Corrected Bearing
* 0	0	0	0	0
15	345		15	
345	15			
30	330		45	
330	30			
** 180	180		75	
195	165			
165	195		105	
210	150			
150	210		135	
* 45	315			
315	45		165	
** 225	135			
135	225		195	
* 270	90			
105	255		225	
255	105			
120	240		255	
240	120			
** 90	270		285	
285	75			
75	285		315	
300	60			
60	300		345	

NOTE: This form to be used in conjunction with "Radio Compass Deviation Calibration Curve." (See Figure 2-7.)

* Cage Gyro 0°
** Recage Gyro 180°

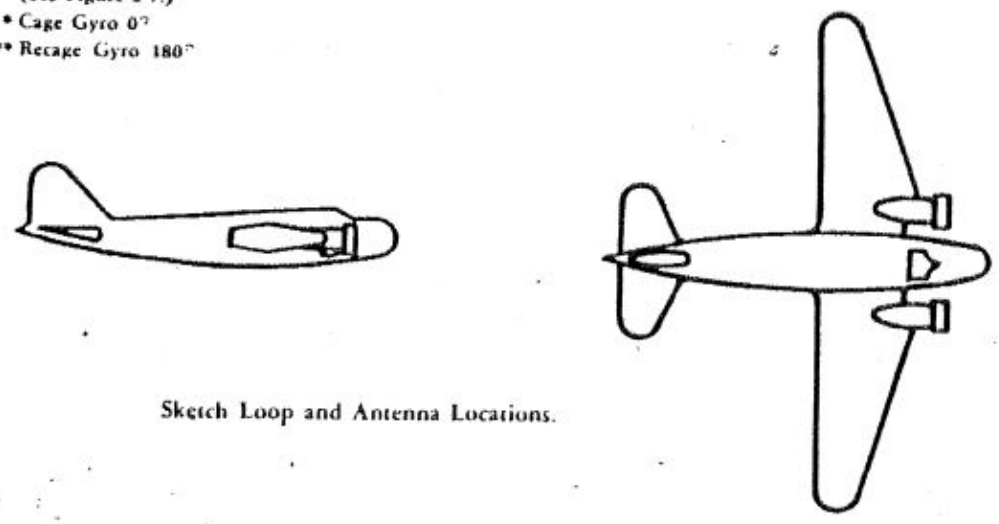

Sketch Loop and Antenna Locations.

Figure 2-5. Radio Compass Deviation Calibration Data

NOTE: Head toward station over predetermined point on reference line, steady, set GYRO on 0° and check zero bearing.

Station Used ID-WWIL
Frequency 266
Plane No. B23 39-27
Pilot BRUNDAGE, A.F.
Recorder SELG, A.D.

Flight Test Data for Curve			Compensator Adjustment Data	
Column #1	Column #2	Column #3	Column #4	Column #5
Gyro Bearing	Plane to Radio Station Bearing	Indicated Bearing	Loop Scale Reading	Compensator Corrected Bearing
* 0	0	0	0	0
15	345	349	15	29
345	15	7		
30	330	338	45	62
330	30	16		
** 180	180	180	75	82
195	165	170		
165	195	188	105	100
210	150	159		
150	210	197	135	124
* 45	315	325		
315	45	27	165	158
** 225	135	146		
135	225	208	195	208
* 270	90	90		
105	255	242	225	244
255	105	112		
120	240	221	255	263
240	120	131		
** 90	270	269	285	281
285	75	64		
* 75	285	291	315	306
300	60	43		
60	300	309	345	340

NOTE: This form to be used in conjunction with "Radio Compass Deviation Calibration Curve." (See Figure 2-8.)

* Cage Gyro 0°

** Recage Gyro 180°

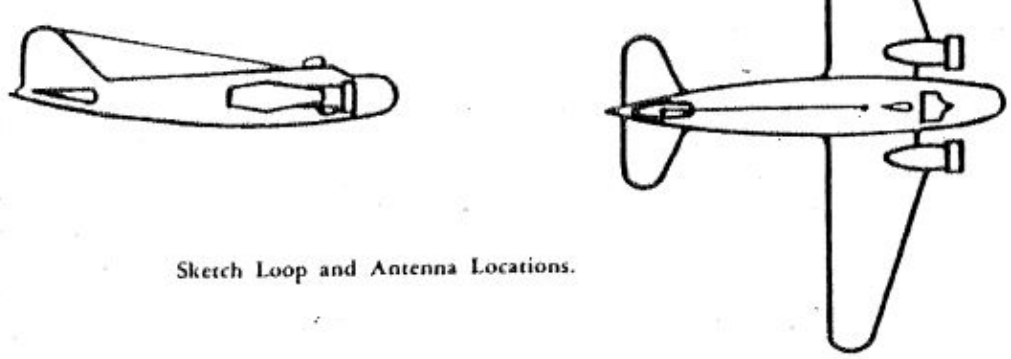

Sketch Loop and Antenna Locations.

Figure 2-6. Radio Compass Deviation Calibration Data, Numerical Example

AIRCRAFT A.C. NO. _____ BY _____ DATE _____

STATION _____ FREQUENCY _____ K.C. EQUIPMENT TYPE _____

REFERENCE LINE, LANDMARK: _____ PREDETERMINED POINT _____

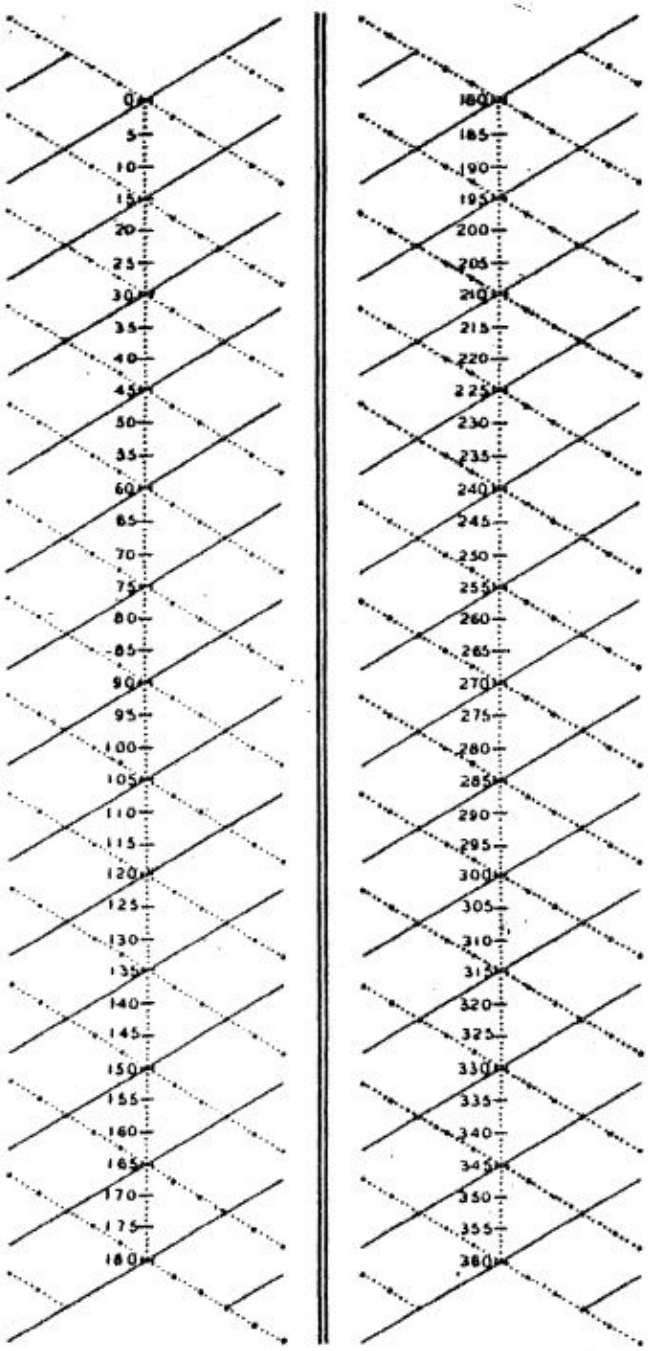

Figure 2-7. Radio Compass Deviation Calibration Curve

AIRCRAFT A.C. No. 39-27 B-23 BY _____ DATE FEB. 5, 1946

STATION WWIL ·—·· FREQUENCY 266 K.C. EQUIPMENT TYPE AN/ARN-6

REFERENCE LINE, LANDMARK U.S. HIGHWAY #36 PREDETERMINED POINT EATON, OHIO

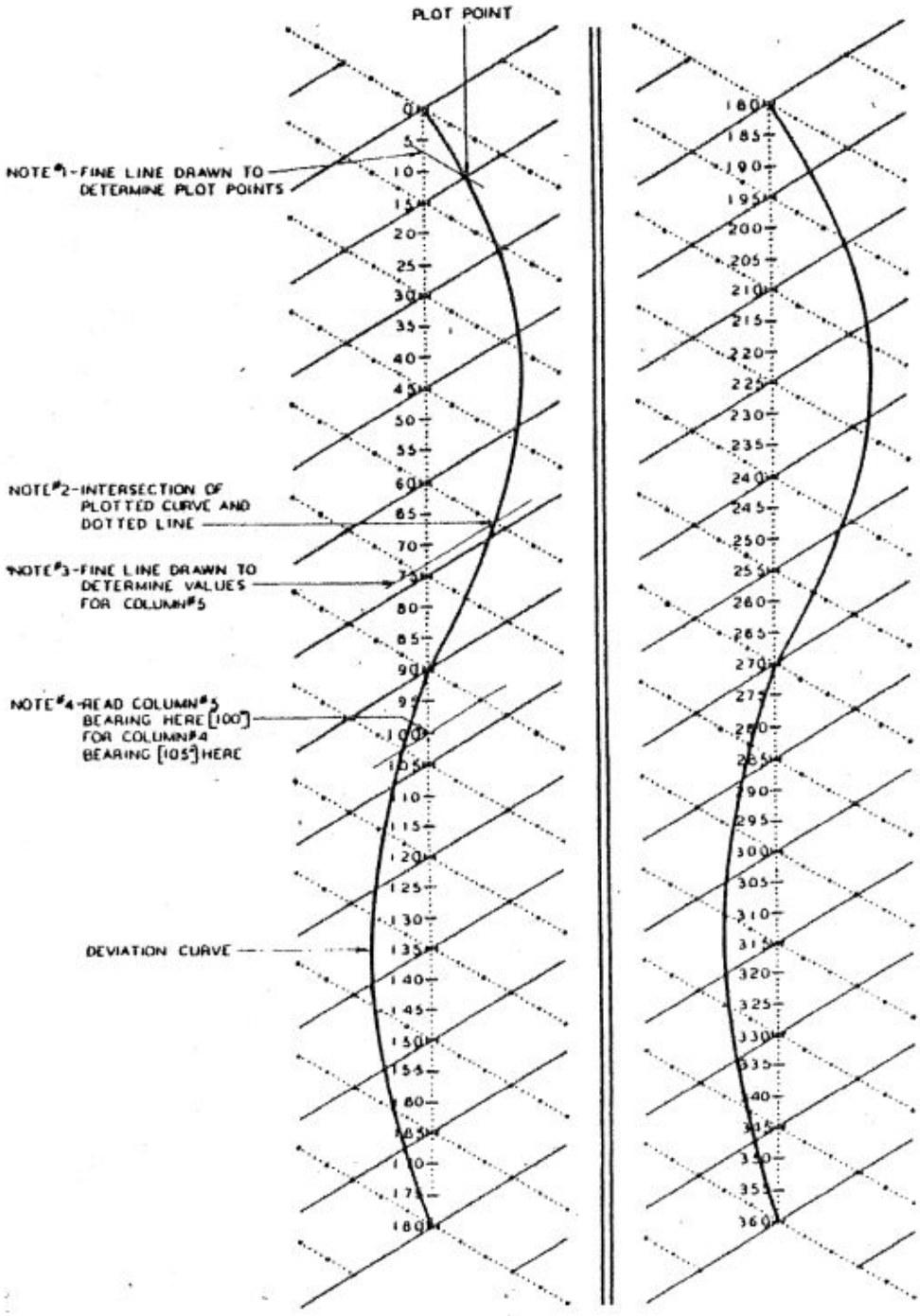

Figure 2-8. Radio Compass Deviation Calibration Curve, Numerical Example

(h) Repeat the above procedure until the entire flight pattern of figure 2-4 has been flown.

(i) During the above procedure, take care to avoid parallax in reading the instruments and set the directional gyro accurately. Make one or two check runs to obtain best accuracy.

(j) Calibration data obtained for a particular type of airplane is usable without modification for all airplanes of that type if the location of the loop and other antennas is the same. Since all airplanes of the same type may not have the same radio installations, an accurate diagram with antenna dimensions and exact loop location will add to the usefulness of the recorded data (figure 2-6).

Note

Since the radio compass deviation changes to some extent with frequency, take calibration data at several frequencies to ensure greatest accuracy in use. The readings used to set up the compensator in loop should be those obtained at some frequency between 200 and 800 kilocycles, since in that frequency range the radio wave characteristics are better suited to radio compass use. Under service conditions, and with the compensator properly adjusted, the over-all radio compass deviation should not exceed 3 degrees except at points of large rate of change of error between 15 degree rhumb lines or sectors.

b. ADJUSTMENT OF COMPENSATOR.

(1) GENERAL.—After the radio compass deviation has been determined in accordance with section II, paragraph 2. *a.*, it may be compensated on compensator in Loop AS-313/ARN-6 or AS-313A/ARN-6 so that correct bearings may be read directly from the bearing pointers of Indicators ID-90( )/ARN-6, ID-91( )/ARN-6, ID-92( )/ARN-6, and ID-231( )/ARN-6. Although the corrections can be compensated by direct reference of the observed data, it is more practicable because of the design of the compensator to plot the data and interpolate from the resultant curve the values of correction to be applied at each adjusting screw when the cam roller is aligned with the screw.

Note

If deviation calibration is being determined for an aircraft in which the loop is mounted in a position perpendicular (on the horizontal plane) to the normal fore-and-aft centerline, the indicated bearings will have a 90 degree displacement if any indicator other than the ID-231( )/ARN-6 is used. Therefore, if for instance, Indicator ID-92( )/ARN-6 is being used (under this condition) for calibration, 90 degrees must be added to, or subtracted from, the bearings read on Indicator ID-92 ( )/ARN-6 when determining the correction data and this 90 degree displacement must also be considered when adjusting the compensator screws on the loop. If Indicator ID-231( )/ARN-6 is used to determine deviation correction data under these conditions, the indicated bearing on Indicator ID-231( )/ARN-6 will be in the correct quadrant and the loop scale will contain the 90 degree displacement. *(See figure 6-16.)*

(2) DETERMINATION OF CORRECTION DATA.

(a) Plot the indicated bearing from column 3, figure 2-5, against the corresponding plane-to-radio station bearings of column 2, using the chart of figure 2-7. An example is shown in figures 2-6 and 2-8. Lay a straightedge parallel to the dotted line (note 1, figure 2-8) and through the chosen point of column 3, and draw a fine line. The point at which this line intersects the solid 15-degree line (column 2) is the plot point. For example, the indicated bearing, for a true bearing of 15 degrees (column 2), is 7 degrees (column 3). Lay a straightedge parallel to the dotted line through the 7-degree vertical graduation and draw a fine line. This fine line intersects the solid line which passes through the 15-degree graduation. This intersection is one point on the deviation curve. Repeat the above for each of the 24 15-degree positions and then draw a smooth curve through the plotted points to form the deviation curve.

Note

Do not attempt to apply corrections exceeding plus or minus 25 degrees on the compensator. The correction curve should be smooth and essentially sinusoidal. If there are sharp discontinuities in the curve or if the rate of change of correction exceeds 12 degrees in 15 degrees of azimuth, it will be necessary to determine the cause of such errors and remove this cause, as such errors will usually be caused by unsymmetrical antenna structures on the aircraft. It will then be necessary to rerun the aircraft error calibration. Should antennas or the aircraft structure be changed in any way after a calibration has been made, it will be necessary to rerun the calibration. The indicated bearings are listed in column 4 for adjustment of the compensator. Adjustment may proceed in either the clockwise and counterclockwise progression from the zero position as shown in the chart, or from the 15-degree position directly around in simple clockwise progression.

(b) The next step is to determine from the above deviation curve the values for column 5. Draw a fine line (see note 3, figure 2-8), parallel to the solid lines from the intersections (see note 2, figure 2-8) of the plotted deviation curve and the dotted lines, to the

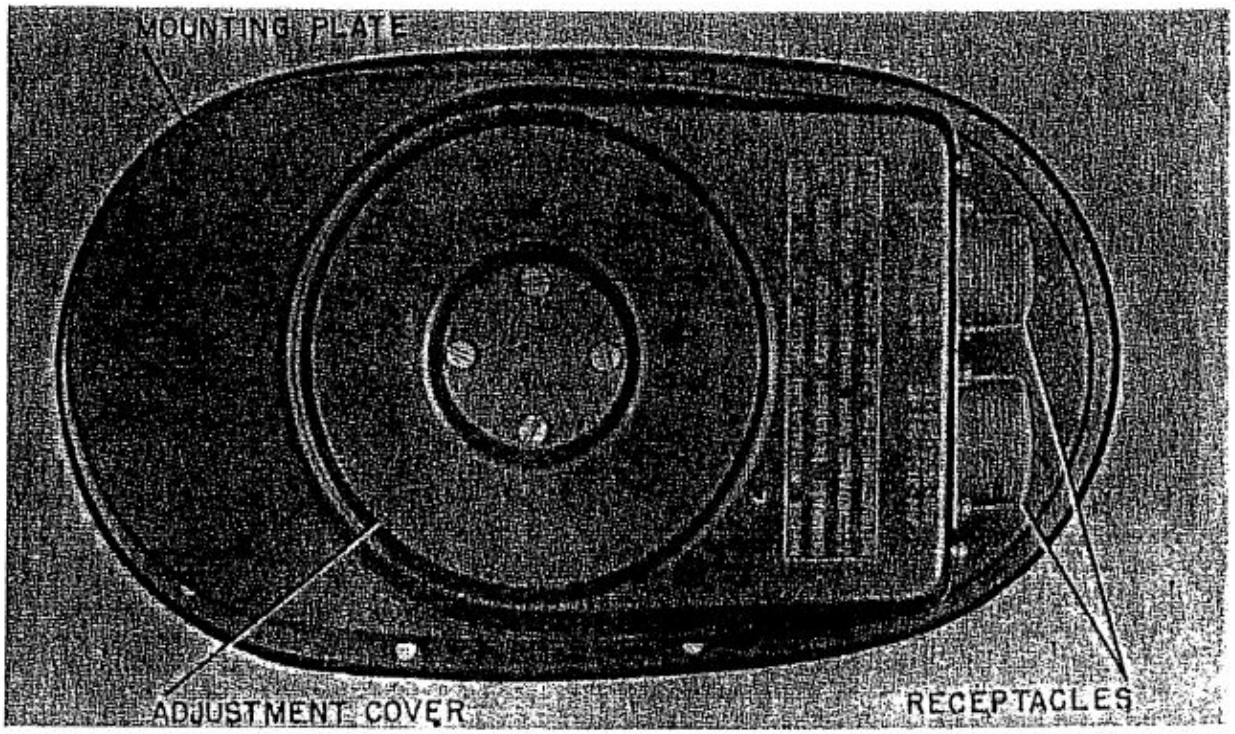

Figure 2-9. Loop AS-313( )/ARN-6, Bottom View

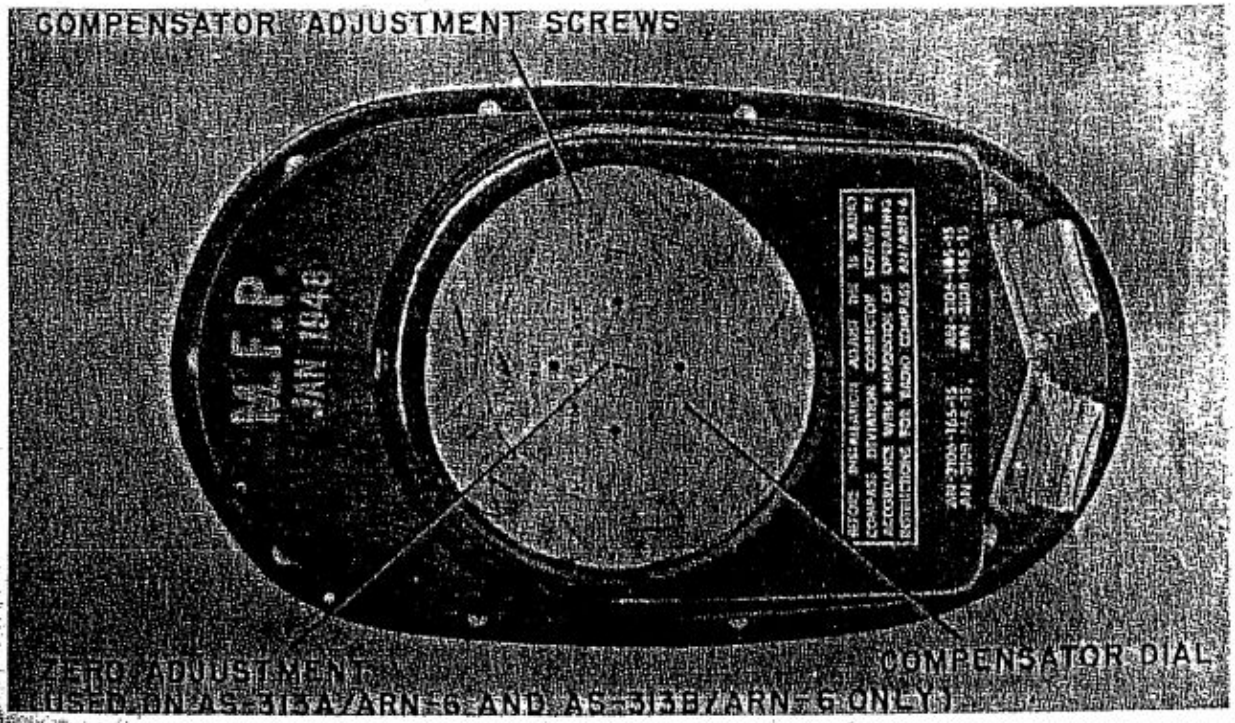

Figure 2-10. Loop AS-313( )/ARN-6, Bottom View (Adjustment Cover Removed)

vertical graduations. In column 5, record values for the points of intersection (see note 4, figure 2-8) as read on the vertical graduations, beside the 15-degree dotted line values in column 4. For example, it is desired to determine the corrected pointer bearing for the loop position of 60 degrees (column 4). Lay the straightedge parallel to the solid line and draw a fine line through the intersection of the dotted 60-degree line and the deviation curve (see note 2, figure 2-8). This line passes through the vertical graduations at 73 degrees. This bearing value is recorded in column 5. Similarly a bearing of 105 degrees rom column 4 gives a bearing of 100 degrees for column 5.

(3) ADJUSTMENT OF COMPENSATOR SCREWS.

(a) Remove the loop from the airplane (unless ready access to the bottom of the assembly and the loop scale can be had without dismounting). Remove the compensator adjustment cover by removing the four small screws about the center (see figure 2-9).

(b) Determine which scale is to be used (black for top mounting; red for belly mounting). (See figure 2-10.)

(c) With the loop connected to its power supply and an indicator, and in operation, use a screwdriver to adjust the 12 (AS-313/ARN-6) or 13 (AS-313A/ARN-6 and AS-313B/ARN-6) adjustment screws as outlined below. (If the loop is removed from the plane, it may be necessary to make a bench set-up for compensator adjustment.) For circuit and list of necessary equipment see figure 2-11.

(d) Rotate the loop until the loop pointer is exactly at 15 (column #4) on the proper scale (red or black). Turn the screw next to 15 (on the compensator scale of the same color on bottom of loop) until the indicator reads the figure shown in column No. 5 (corrected radio bearing).

Note

If the loop is mounted in a position which is perpendicular (on the horizontal plane) to the normal fore-and-aft aircraft centerline study figure 6-13 and determine what correction (quadrant) must be applied to the loop scale. That is, if the loop has been mounted perpendicular to the fore-and-aft centerline and Indicator ID-231( )/ARN-6 was used to obtain correction data, add 90 degrees to the readings of the loop scale and adjust the screw (on the compensator scale) next to this new (90 degree added) number.

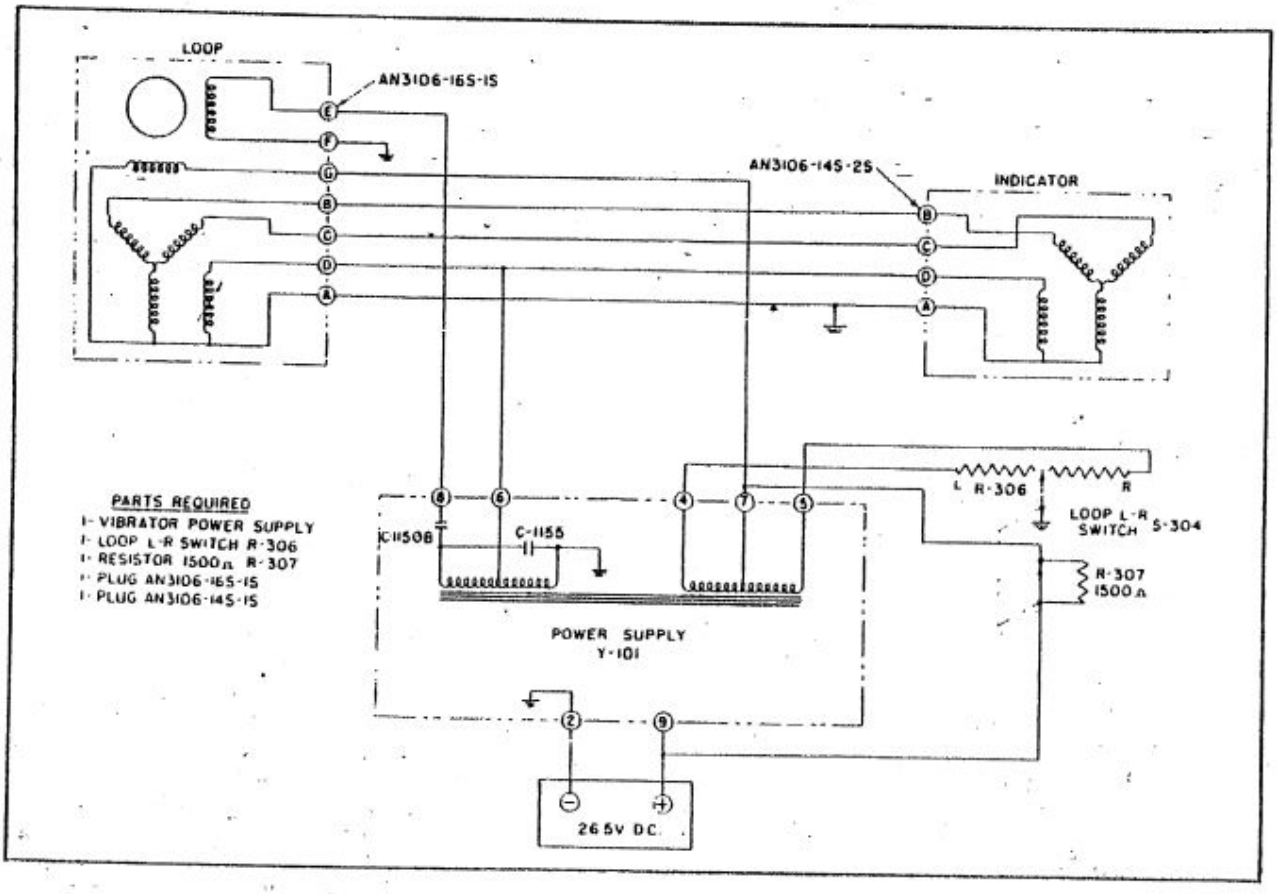

Figure 2-11. Bench Set-Up for Loop Compensator Adjustment

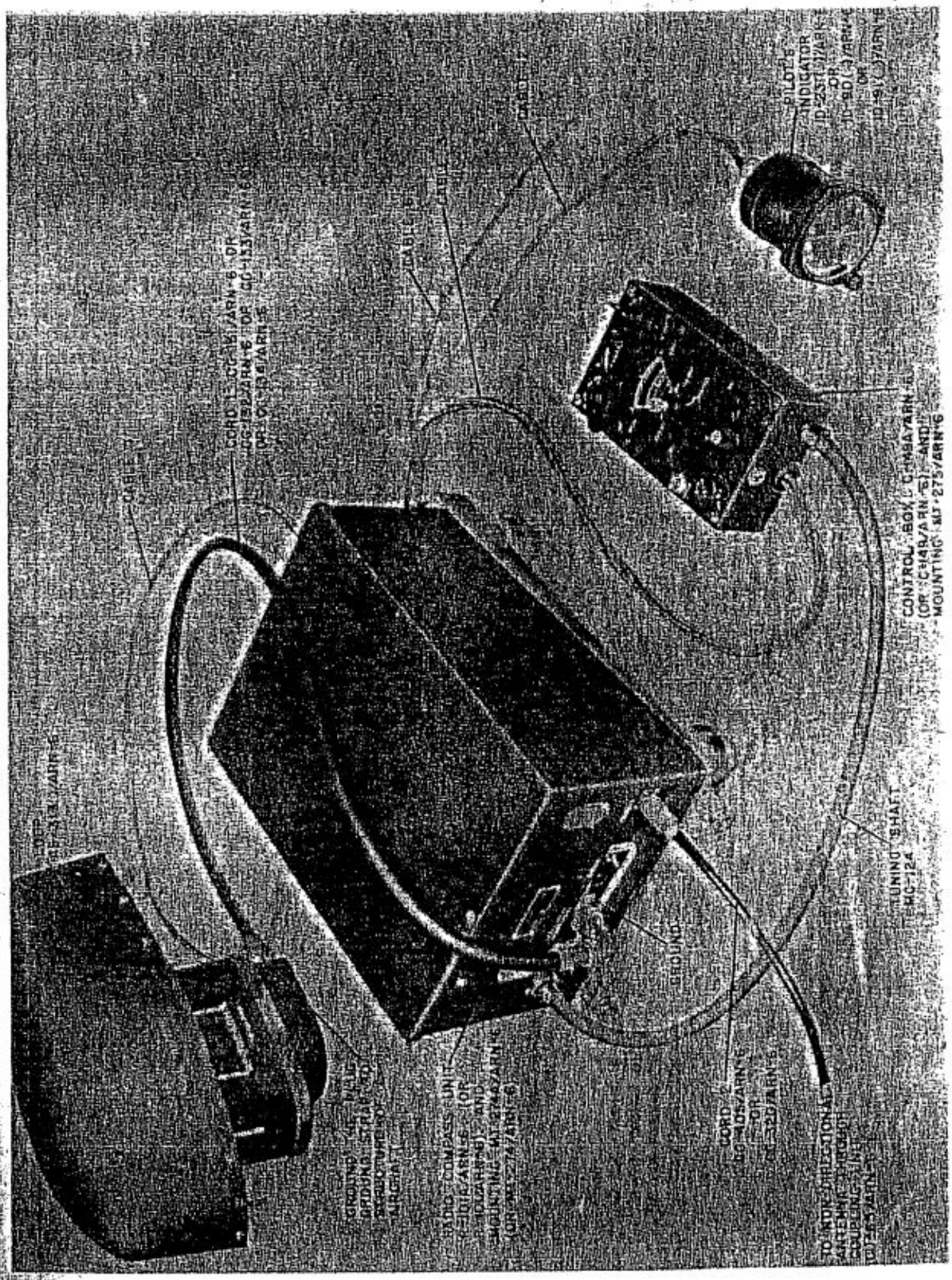

Figure 2-12. Pictorial Cording Diagram (Single Control)

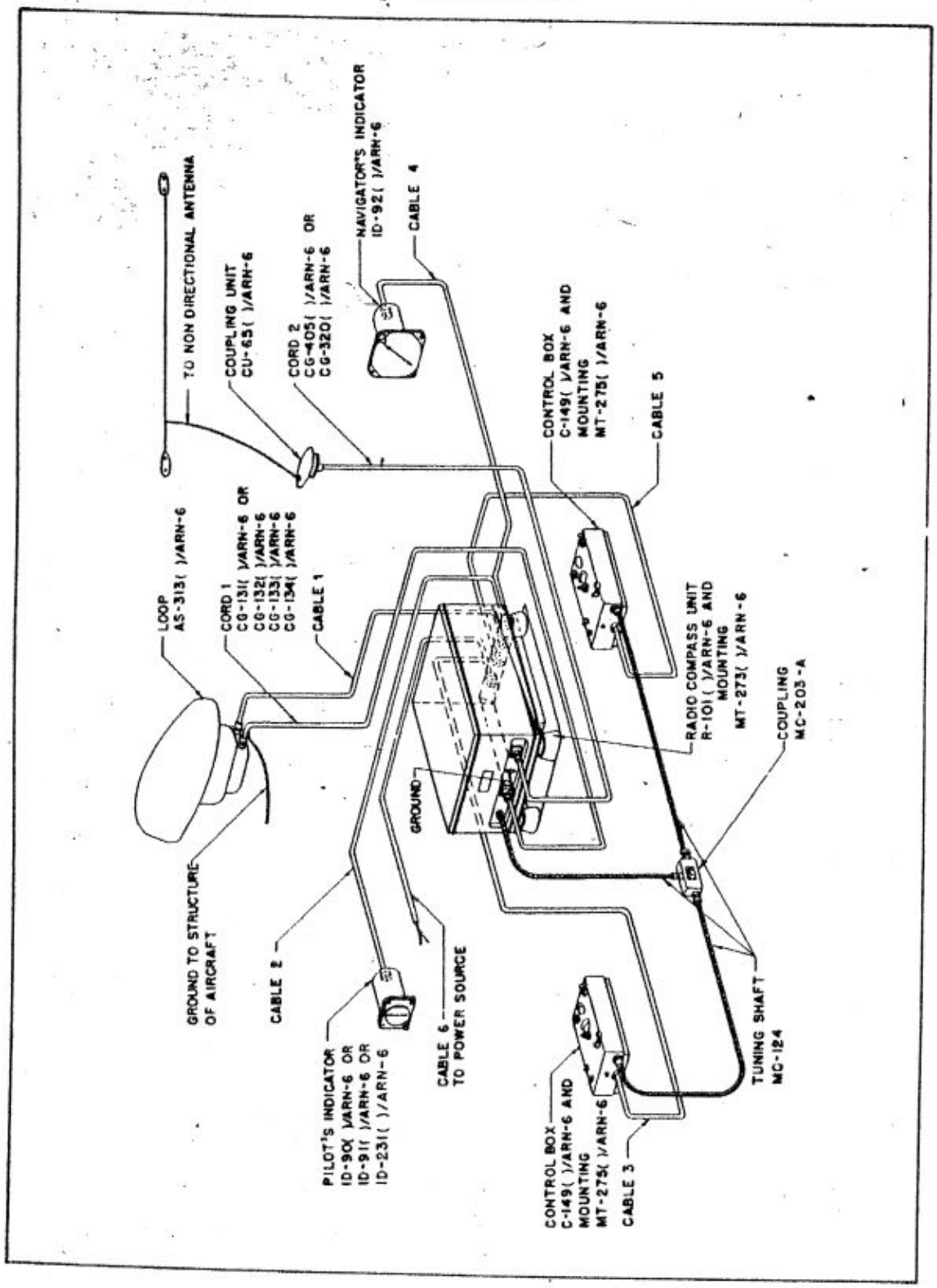

Figure 2-13. Cording and Interconnection Diagram (Dual Control)

(e) Rotate the loop to the next number in column No. 4 and adjust the corresponding screw to the figure shown in column No. 5. Continue around the screws in numerical order.

CAUTION

Never turn any of the compensating screws more than two complete revolutions at a time, to avoid putting a permanent bend in the cam strip.

(f) If large errors are to be corrected, or if the rate of change per 30-degree sector is rapid, it may be necessary to set up one-half or one-third the required correction on all screws. Go around the circle once or twice more until all screws have been satisfactorily adjusted.

(g) Replace the compensator adjustment cover. Remount the loop and connect the cables.

(4) ADJUSTMENT OF LOOP COMPENSATOR SCREWS FOR SPECIAL INSTALLATION IN P-84 AIRCRAFT.—In the P-84 aircraft the loop is mounted with its zero heading 90 degrees counterclockwise from the fore-and-aft centerline of the aircraft, as viewed from above. Indicator ID-231( )/ARN-6 must be used in this special installation to correct for the 90 degree counterclockwise displacement of the loop zero heading. Follow procedure as outlined in section II, paragraph 2, for development of the deviation calibration data and then proceed with loop compensator adjustments as follows:

(a) Follow instructions outlined in paragraph (3) preceding while making use of table 2-2 for correct loop scale reading and compensator corrected bearing.

(b) Table 2-2 is a *numerical example* showing how to change the information found in column No. 4 of figure 2-6 to the correct loop scale reading for P-84 aircraft installations as listed in column No. 4a of table 2-2. To obtain the information given in column No. 4a, add 90 degrees to the figures found in column No. 4. When performing the above addition, if the sum is greater than 360 degrees, subtract 360 degrees from the total to obtain the correct figure for column No. 4a. The compensator corrected bearing remains unchanged as is shown in columns No. 5 and 5a.

Table 2-2. Loop Compensator Adjustment Data for P-84 Aircraft, Numerical Example

Compensator Adjustment Data As Given in Figure 2-6		*Corrected Compensator Adjustment Data for Use with Special Loop Installation in P-84 Aircraft*	
Column 4	*Column 5*	*Column 4a*	*Column 5a*
Loop Scale Reading	*Compensator Corrected Bearing*	*Loop Scale Reading*	*Compensator Corrected Bearing*
15	29	105	29
45	62	135	62
75	82	165	82
105	100	195	100
135	124	225	124
165	158	255	158
195	208	285	208
225	244	315	244
255	263	345	263
285	281	15	281
315	306	45	306
345	340	75	340

NOTE: If Loop AS-313A/ARN-6 or AS-313B/ARN-6 is used in the installation, it is possible to apply some correction at 270 degrees by using the zero adjustment screw. When making this adjustment be sure to observe the "CAUTION" on the compensator adjustment cover.

SECTION III
OPERATION

1. OPERATING CONTROLS.

Figure 3-1 shows the front of Control Box C-149/ARN-6 or C-149A/ARN-6; figure 3-1A shows the front of Control Panel C-403A/A, and figure 3-1B shows the front of Control Panel C-758/A. Figure 3-1C shows the front of Control Panel C-1514/A. (Note: On function switch "ADF" replaces "COMP"). The figures identify for the operator the various controls and other items used. Corresponding controls bear corresponding reference numbers.

2. TO START AND STOP THE EQUIPMENT.

a. TO START THE EQUIPMENT.

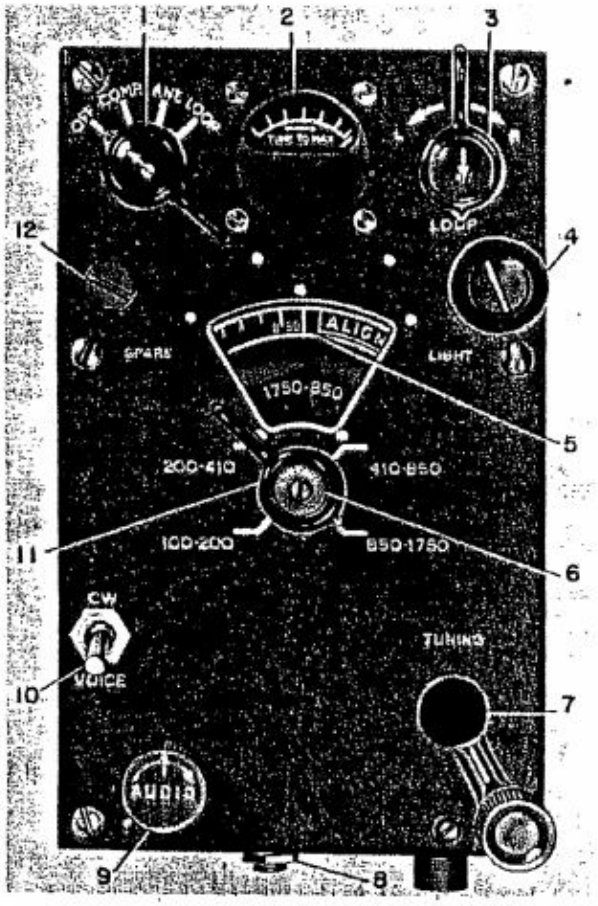

1. Function switch
2. Tuning meter
3. "LOOP L-R" switch
4. "LIGHT" control
5. Dial
6. "CONTROL" button
7. "TUNING" crank
8. Phone jack
9. "AUDIO" control
10. "CW-VOICE" switch
11. Band switch
12. "SPARE" lamp

Figure 3-1. Control Box C-149/ARN-6 or C-149A/ARN-6, Front View

(1) The equipment is started by turning the function switch (1, figures 3-1, 3-1A, 3-1B and 3-1C) to "COMP-ADF.," "ANT.," or "LOOP" position.

(2) In dual control installations it is necessary to determine which control box is in control of the equipment. Control is had if the dial (5) and the tuning meter (2) are illuminated when the "LIGHT" control knob (4, figure 3-1) is turned fully clockwise, or the "LIGHTS" switch (4, figure 3-1A) is set at "HI" or "LO." Another indication of control will be a deflection of the tuning meter pointer away from its clockwise stop after waiting approximately 15 seconds. If control is not obtained, push the "CONTROL" button (6, figure 3-1) or turn the function switch (1, figures 3-1A and 3-1B) momentarily to "CONT," and control will be switched to that control box.

(3) In dual control installations using Control Panels C-1514/A, it is necessary to determine which

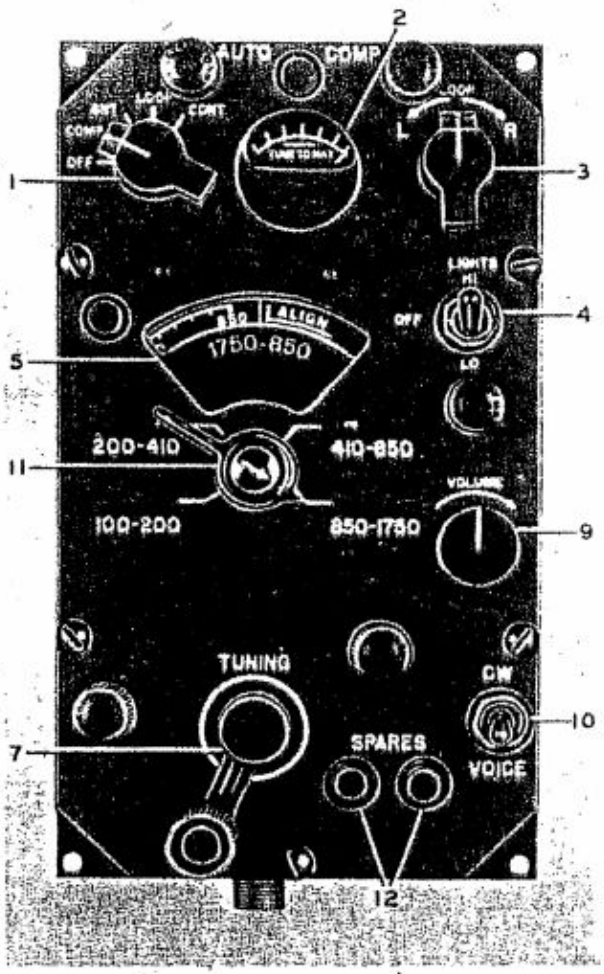

Figure 3-1A. Front of Control Panel C-403A/A

control panel is in control of the equipment. The control panel having its dial illuminated is in control. If control is not had, turn the function switch momentarily to the "CONT" position and control will be switched to that control panel.

b. TO STOP THE EQUIPMENT.—To stop the equipment turn the function switch (1, figures 3-1, 3-1A, 3-1B and 3-1C) to "OFF."

3. OPERATION.

a. GENERAL.—The equipment will perform the following three major functions:

(1) Homing compass operation.

(2) Position finding using automatic and aural-null methods.

(3) Receiver operation using "ANT." or "LOOP."

b. HOMING COMPASS OPERATION.—To use as a homing compass perform the following operations:

(1) Turn the function switch (1, figures 3-1, 3-1A, 3-1B and 3-1C) to "COMP-ADF." position.

(2) In dual control installations push the "CONTROL" button (6, figure 3-1) or turn the function switch (1, figures 3-1A and 3-1B) momentarily to "CONT." if the other box has control.

(3) Rotate the bandswitch (11) to the frequency band in which operation is desired.

(4) Turn the "TUNING" crank to the desired station frequency and tune for maximum swing of the tuning meter (2). Greater accuracy in tuning may be obtained by placing the "CW-VOICE" switch (10) in "CW" position. A 900-cycle tone will be heard along with the station modulation. This will aid in accurate tuning. After tuning, return the "CW-VOICE" switch to "VOICE" to eliminate the 900-cycle tone.

(5) Adjust the "AUDIO" or "VOLUME" control (9) for desired headset level.

(6) Listen for station identification to be sure that the correct station is being received.

(7) Turn the "VAR" knob on the indicator until the azimuth zero is at the index.

(8) The indicator pointer will now show the bearing of the station relative to aircraft heading. For example, if the pointer is to the left of zero, the station is on the left. Turn the aircraft to the left until the pointer is at zero. If the aircraft heading is held at zero degrees on the radio compass indicator, ultimate flight over the radio station antenna will result. Crosswinds, however, will cause the flight path to be a curved line. Direction of wind drift may be determined by noting any change in magnetic bearing while homing with the radio compass. An increasing magnetic bearing indicates a wind from the right while a decreasing magnetic bearing indicates a wind from the left. Compensate for wind drift by offsetting the aircraft heading until there is a minimum rate of change of the magnetic compass reading. The radio compass indicator now shows directly in degrees the relative aircraft to station heading necessary to correct for wind drift.

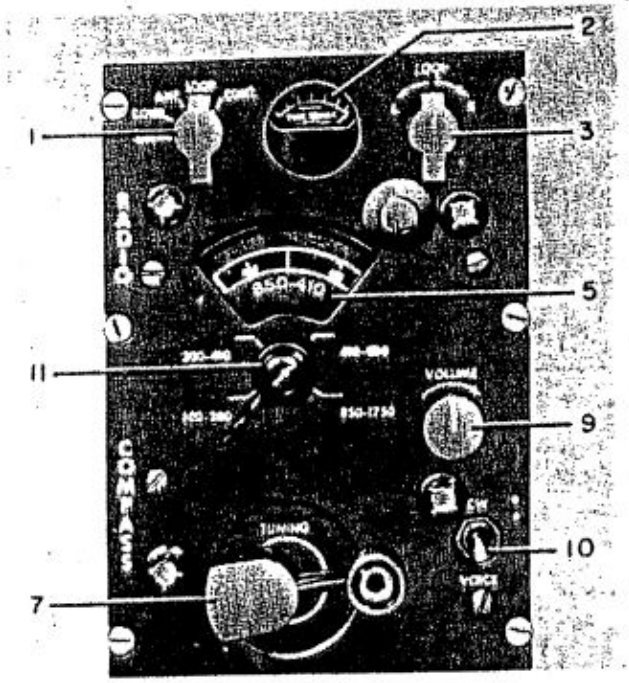

Figure 3-1B. Control Panel C-758/A, Front View

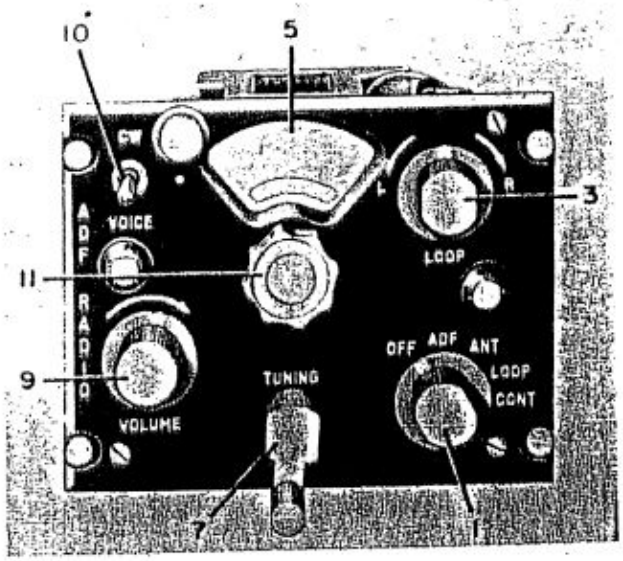

Figure 3-1C. Control Panel C-1514/A, Front View

c. POSITION FINDING.

(1) GENERAL.—There are two methods of position finding, automatic and aural-null. Prior to the use of either method, the following steps should be taken in order to shorten the time required for a complete set of readings.

(a) Select three stations whose geographical locations are spaced at approximately equal intervals about the aircraft.

(b) Tune in the stations, identify them and log their dial readings.

(2) AUTOMATIC METHOD.—For operation as an automatic indicating position finder, perform the following operations:

(a) Adjust "VAR" knob on the indicator until its bearing scale at the index is the same as the *true* magnetic heading of the aircraft.

(b) Set the function switch knob (1, figures 3-1, 3-1A, 3-1B and 3-1C) to "COMP-ADF."

(c) Tune in one of the selected stations, and record the bearing as indicated by the *tail* of the indicator pointer.

(d) Repeat *(c)* for the other stations, in rapid succession, while flying with a steady level heading.

Note

Because of the plane's motion, the less time taken for observations, the greater the accuracy of the fix.

(e) The recorded bearings will be the station to aircraft bearings from north. Project lines from the stations at the recorded bearings. The aircraft position will be within the vicinity of the small triangle made by the intersection of the projected lines.

(3) AURAL-NULL METHOD.—For operation as an aural-null position finder perform the following operations:

(a) Adjust the "VAR" knob on the indicator until its bearing scale at the index is the same as the *true* magnetic heading of the aircraft.

(b) Set the function switch knob (1, figures 3-1A, 3-1B and 3-1C) to "LOOP" position.

(c) Tune in the desired station. To obtain good signal strength for station identification it may be necessary to rotate the loop by means of the "LOOP L-R" switch knob (3) for maximum signal. Direction and speed of loop's rotation are controlled by direction and amount of "LOOP L-R" switch rotation, respectively.

(d) Use the "LOOP L-R" switch knob (3) as indicated in paragraph (c) preceding, and rotate loop for minimum headset volume. Record the bearing shown by the indicator pointer. Better definition of the null may be obtained by turning the "AUDIO" or "VOLUME" control fully clockwise and locating the null by either listening for minimum audio signal or noting a counterclockwise dip of the tuning meter pointer (2). The use of "CW" operation also improves the definition of the null. To obtain "CW" operation throw the "CW-VOICE" switch (10) to "CW" position.

(e) Position finding in "LOOP" operation is subject to a 180-degree error since there are two null points in a 360-degree rotation of the loop. This ambiguity is overcome by keeping aware of the general geographical location and selecting stations located well to the left and right of the course. Figure 3-2 demonstrates a flight on a north course with station A supposedly dead ahead. If the indicator shows a bearing of 180 degrees when station A is used, apparently station A has been passed and the flight is away from it. This indication also could be the result of using the wrong null. However, since station B is to the left and station C is to the right, by taking null point bearings on stations B and C and projecting lines through the stations at angles indicated by their bearings relative to north until they cross, the approximate position may be determined. Then it is known if station A really has been passed or if the wrong null has been used.

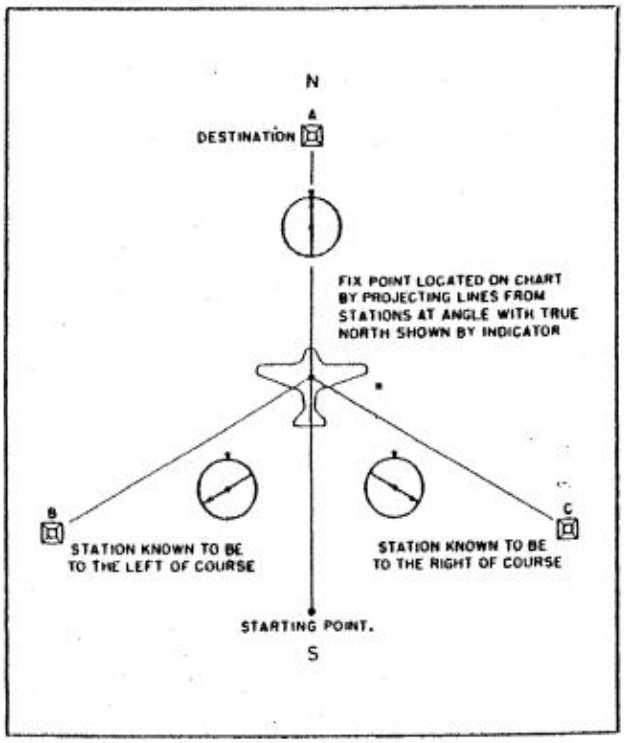

Figure 3-2. Position Fix

d. RECEIVER OPERATION.

(1) ANTENNA RECEPTION.

(a) Turn the function switch (1, figures 3-1, 3-1A, 3-1B and 3-1C) to "ANT." position.

(b) Turn band switch (11) to desired frequency band.

(c) Throw "CW-VOICE" switch (10) to "CW" position for aural reception of unmodulated signals.

(d) Use the "TUNING" crank and tune in the desired station.

(e) Adjust "AUDIO" or "VOLUME" control (9) for desired headset volume.

Note

For best definition of radio range stations adjust the "AUDIO" or "VOLUME" control for the lowest usable headset volume and continue to reduce volume as the A-N signals increase in strength.

(2) LOOP RECEPTION. — If reception on "ANT." is noisy due to precipitation static, commonly known as rain or snow static, better results may be obtained by operating in "LOOP" position as follows:

(a) Turn function switch (1, figures 3-1, 3-1A 3-1B and 3-1C) to "LOOP" position.

(b) Turn band switch (11) to desired frequency band.

(c) If station is unmodulated, place "CW-VOICE" switch (10) in "CW" position.

(d) Tune in desired station.

(e) Rotate loop with the "LOOP L-R" switch (3) until maximum signal is obtained. If flight course is not straight, readjustments may be necessary.

(f) Adjust "AUDIO" or "VOLUME" control (9) for desired headset volume.

(g) For best definition of radio range A-N signals on "LOOP," it is necessary to maintain the loop near the 90- or 270-degree position and adjust the "AUDIO" control for lowest usable headset volume.

Note

Cone of silence indications are not always reliable while receiving on "LOOP." In some cases, an increase instead of a decrease in signal may be noted. This is the result of certain types of radio range transmitting antennas and the loop location on the aircraft.

e. SUMMARY OF PRECAUTIONS DURING OPERATION.

(1) Select radio stations that provide stable bearings. Do not use a station for bearing unless it can be identified by headset signal on "COMP-ADF." operation. High powered clear channel stations should be used when possible. Any interference from other stations will cause an error in bearing. Tune equipment accurately. Station identification must be checked, especially stations broadcasting network programs. Avoid taking bearings on synchronized stations except when close to desired station. If station stops transmitting or fades, bearings may change to other stations of the same frequency thus causing errors. This is especially true of code stations operating in a network.

(2) Night effect or reflection of radio waves from the sky may be recognized by fluctuations in bearings. Night effect is worse at sunrise and sunset. The higher the frequency of operation the greater the night effect. It may be present at distances over 20 miles when receiving 850 to 1750-kilocycle stations, however with 100 to 450-kilocycle stations reliable bearings above 200 miles can be taken even when night effect is present. The remedies for night effect are:

(a) Increase altitude, thereby increasing signal strength of direct waves.

(b) Use stations operating on lower frequency.

(c) Take an average of the fluctuations.

(3) Mountain effect is considered to be the reflection of radio waves from mountain surfaces. It is known to exist around Salt Lake City and Pittsburgh. Do not rely fully on bearings taken in such areas.

(4) For aural reception of A-N signals, operate equipment on "ANT." or "LOOP" instead of "COMP-ADF." since the action of AVC in "COMP-ADF" position will cause broad course indications. Always operate the equipment with "AUDIO" control set at lowest usable headset volume and reduce it as the A-N signal strength increases. Cone of silence indications are not always reliable when operating the equipment on "LOOP." Use equipment on "ANT." for cone of silence indication.

(5) This equipment should provide compass bearings during conditions of moderate precipitation static which interrupt normal reception. When static becomes too severe it will be necessary to operate on "LOOP" position. In this position, satisfactory aural reception and aural-null direction finding will be possible most of the time.

(6) Do not depend on two stations for a fix of location; use at least three stations with bearings spaced at approximately equal intervals throughout 360 degrees for greatest accuracy.

(7) While taking bearings always keep aircraft on a steady level heading.

(8) When homing or direction finding on "LOOP" operation there is a 180-degree ambiguity and station bearings may be 180 degrees from the null obtained. Use stations with good signal strength for sharply defined nulls. Width of null may be controlled by position of "AUDIO" or "VOLUME" control. The tuning meter may be used as a visual-null indicator.

SECTION IV
THEORY OF OPERATION

1. GENERAL.

a. OVERALL PURPOSE OF EQUIPMENT.—Radio Compass AN/ARN-6 is designed to guide the aircraft to a transmitting station at its destination or to take bearings on transmitting stations as an aid to navigation. The indicator continuously indicates the direction of the transmitting station with respect to the aircraft heading. While the equipment is being used as a radio compass, the pilot and navigator can also hear the station signals and thus obtain weather reports or other flight information. In addition, it may be used as a radio communication receiver.

b. OVERALL FUNCTIONING OF EQUIPMENT.—The general functioning of the equipment is outlined in the block diagram, figure 4-2. The directional loop receives a signal which passes through a stage of preamplification. The phase of the signal is retarded 90 degrees, for reasons described in detail later, and then is fed to both grids of a dual-triode tube used as a balanced modulator, with 100-cycle push-pull modulation. The modulated signal is combined with the signal from the sense, or nondirectional, antenna, and the result goes through a more or less conventional superheterodyne receiver. The detected signal is fed to two independent output circuits, one for listening, and the other for automatic control of the loop drive motor. The position of the loop is remotely shown on the indicators. The manner in which these results are obtained is described fully in paragraphs 2 and 3, following.

2. DETAIL FUNCTIONING OF EQUIPMENT.

a. LOOP AS-313/ARN-6, AS-313A/ARN-6, OR AS-313B/ARN-6.

(1) Loop AS-313/ARN-6, AS-313A/ARN-6, or AS-313B/ARN-6 consists of a rotatable loop coil, driven by a motor (B-701) through a gear train. There is an autosyn transmitter (B-702) connected to the loop coil through a "compensator," which transmits to the indicators the orientation of the loop coil. The compensator is actually a variable cam, which causes the autosyn transmitter to run ahead of, or behind, its normal position with respect to the loop coil. The function of the compensator is more fully described in paragraph (4) below.

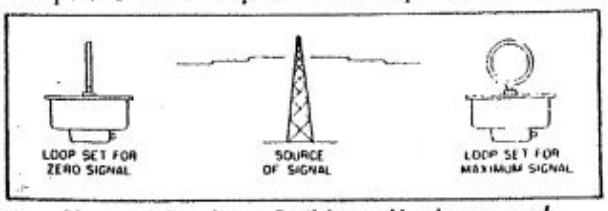

Figure 4-1. Loop Positions, Maximum and Zero Signal

(2) The loop antenna is directional in that the voltage induced in the loop is maximum when the line of travel of the received radio wave lies in the plane of the loop coil (figure 4-1). The resultant voltage which is induced in the loop is 90 degrees out of phase with that of the sense antenna, and leads or lags according to which edge of the loop coil is nearer the signal source.

(3) In "Compass" operation, the direction in which the motor drives the loop coil depends (through receiver circuits) on whether the loop signal leads or lags the sense signal; by this means the loop coil is rotated so that the same side of the coil is always toward the station being received. Since the loop coil position is transferred to the indicators by the autosyn systems, except as discussed in paragraph (4) immediately following, the indicators show the bearing of the received station.

(4) The line of travel of the received radio wave is subject to distortion by the metallic structure of the airplane; the effect of this distortion is to make the station being received appear to be in a false direction. Since the loop is unable to allow for this, a compensator, mentioned in paragraph (1) above, comes between the loop coil shaft and the autosyn transmitter. This causes the transmitter to run behind or ahead of the loop, according to an experimentally determined curve (section II, "Installation and Adjustment," paragraph 2.*a.*), so that the indicators will give the correct bearing.

b. RADIO COMPASS UNIT R-101 ARN-6 OR R-101A/ARN-6.

(1) MECHANICAL. *(See figure 4-21.)*—Radio Compass Unit R-101/ARN-6 or R-101A/ARN-6 is mechanically simple. The rotation of the tuning capacitor is done through a 120:1 gear train, which is built into the capacitor. The endplate has a spline connection which projects through a hole in the cabinet to receive the flexible drive shaft. The band switch mechanism is a frame supporting a motor, gear train, and geneva movement, whereby two shafts, to which the band-switch wafers are keyed, are rotated. Since the switch shafts rotate intermittently, because of the geneva movement, there is no need for a motor clutch or quick-stop device.

(2) COMPASS OPERATION. *(See figures 4-3, 4-4, 4-5, and 4-6.)*

(a) The voltage from the loop is amplified (by V-101) and retarded 90 degrees (by L-102) so that, instead of leading or lagging, it is either in phase with

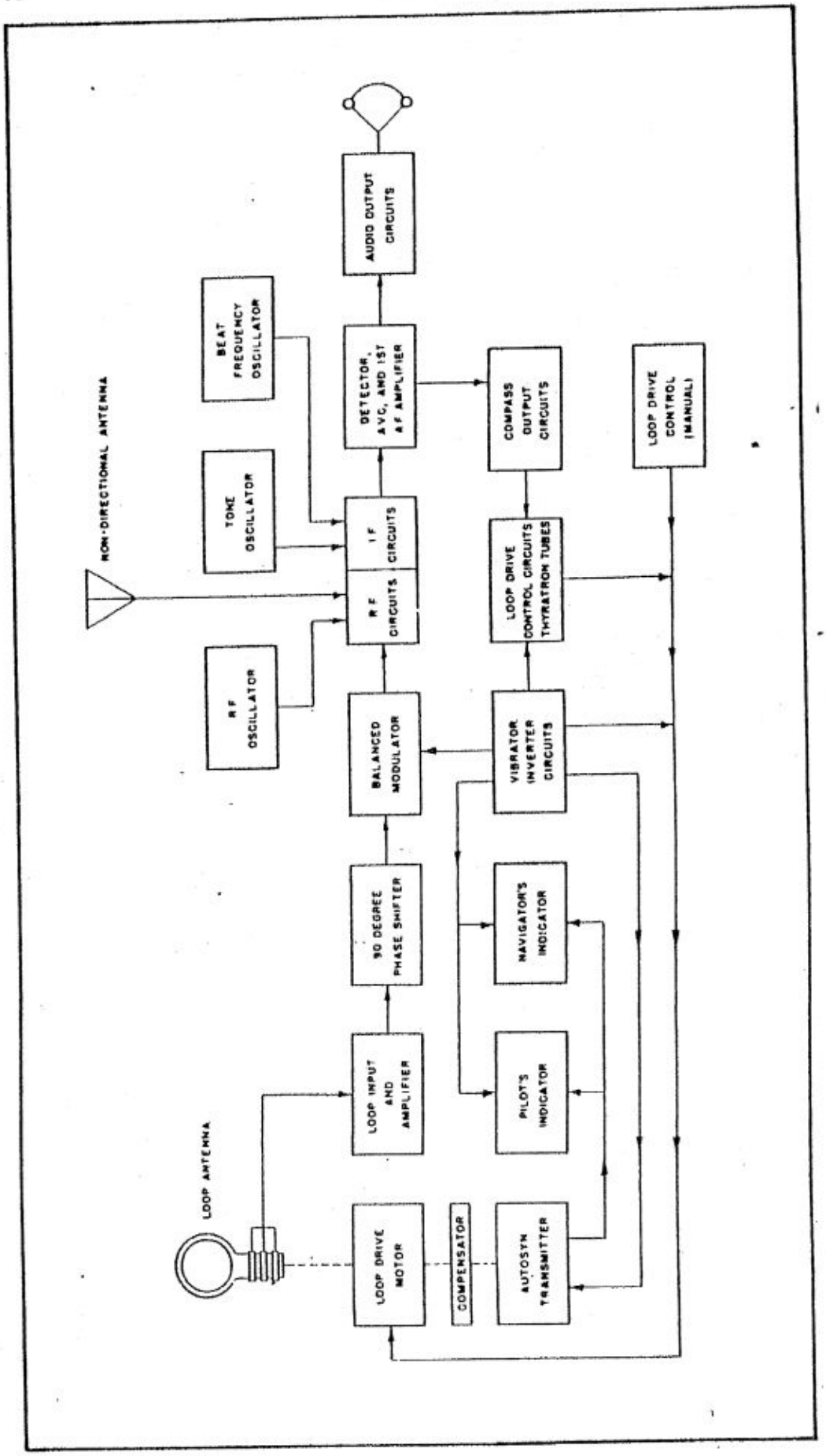

Figure 4-2. Functional Block Diagram

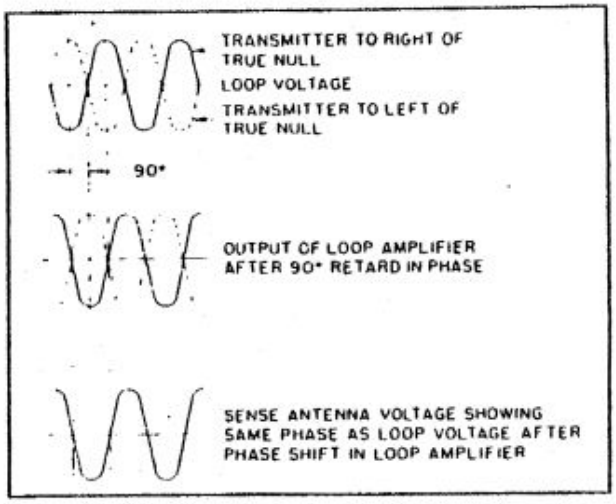

Figure 4-3. Phase Relations, Loop and Antenna Circuits

or in phase opposition to the voltage received by the sense antenna depending on which edge of the loop is nearer the transmitter. This is shown in figure 4-3.

(b) Refer to figure 4-4 (A, B, C, D, E). The signal output of the phaser is fed equally to both grids of the balanced modulator (V-102). This tube acts as an amplifier, feeding into the center-tapped winding of transformer L-103. Since the two plates feed the opposite ends of a winding, and since the signals on the plates are in phase, it might be expected that no current would flow in the winding, and consequently no signal would pass through. However, the grids have impressed on them, in phase opposition a modulating voltage from the 100-cycle inverter unit. The effect of this modulating voltage is to make first one of the triodes pass the signal, and then the other. This is equivalent to shifting the input from one end of the coil of L-103 to the other; or, in other words, reversing the phase of the signal, as shown in figure 4-4, D, E.

(c) The signal derived as above (figure 4-4, D, E) and the signal received on the sense antenna (F) are combined in the output of L-103, giving a result shown in (G). This signal passes through the RF and IF circuits of the receiver, and, when finally demodulated by V-108, the resulting 100-cycle audio signal has a phase relation with respect to the original ap-

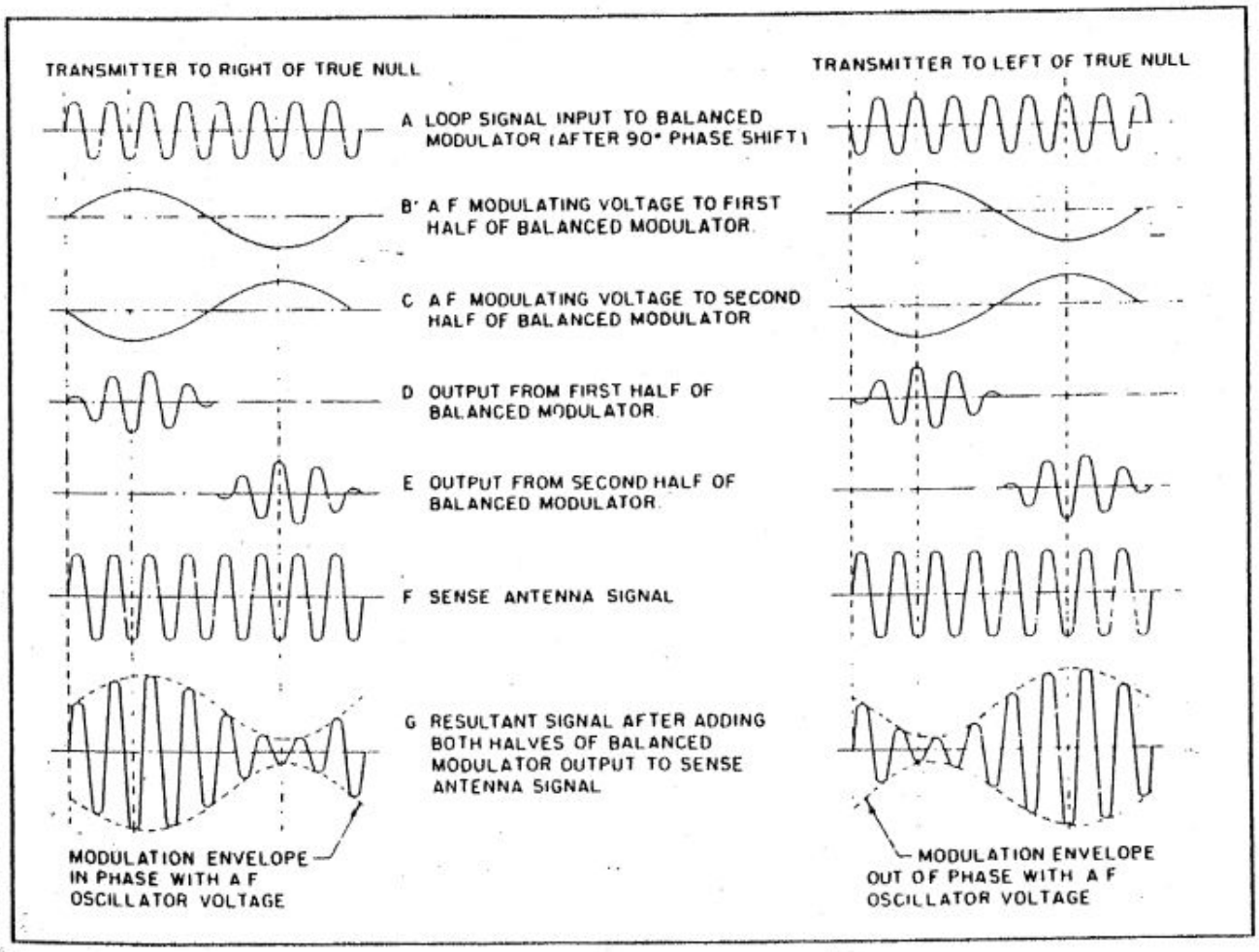

Figure 4-4. Balanced Modulator, Input and Output

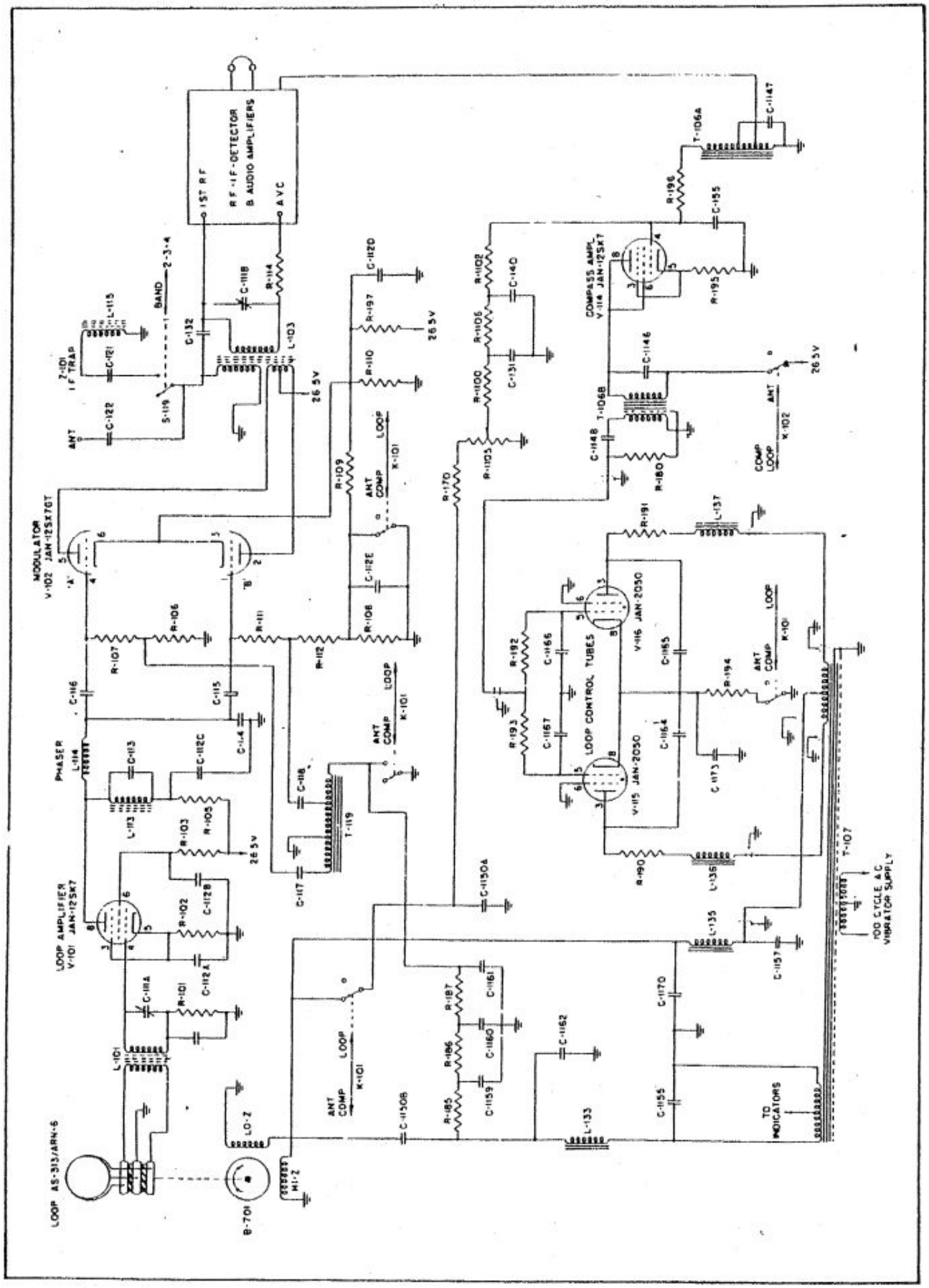

Figure 4-5. Functional Diagram—Compass and Loop Control Circuits of Radio Compass Unit R-101/ARN-6

plied 100-cycle modulating voltage which is dependent upon the direction of signal reception with respect to the axis of the loop.

(d) The 100-cycle audio output is taken from the cathode circuit of V-108. The signal is amplified by V-114, for which T-106A and T-106B are the input and output transformers, respectively; both transformers are resonated by capacitors to give a peak response at 100 cycles. This 100-cycle output feeds the grids of two thyratron tubes, V-115 and V-116, whose plates are supplied in phase opposition, or push-pull, from the same source which furnished the original modulation in V-102. Since one plate is positive and the other negative at any given moment, that tube will fire whose plate is positive when the grids go positive. This, of course, depends on the phase relation of the grid and plate voltages as explained in the immediately preceding paragraphs. The firing of either tube will cause current to flow in the high impedance ("Hi-Z") winding of the loop drive motor, through the following circuit: R-194, K-101, ground, terminal X of P-102 and J-501, terminal 2 of E-501, terminal 4 of B-701, Hi-Z winding, terminal 3 of B-701, terminal 21 of E-501, terminal E of P-102 and J-501, terminal 5 of T-107, thence through the winding of T-107 to one or the other control tube. The phase of the current drawn determines the direction of rotation of loop drive motor B-701, and is, in turn, determined by which half of the winding of T-107 is used. Since this selection is made by the control tubes, and therefore by the direction of the incoming signal, the motor turns the loop one way or the other, depending on which side of the loop is nearer the direction of signal approach. Rotation stops for lack of signal when the "front" face of the loop exactly faces the transmitter.

Note

Obviously there will be no rotation if the "rear" face of the loop faces the transmitter. However, in this condition, the loop is in unstable equilibrium and the slightest deviation from exactness will start the loop turning until it is properly oriented.

(3) ANTENNA OPERATION. *(See figures 4-5, 4-6, 4-7, and 4-8.)*

(a) When the instrument is used for ordinary communication reception with the sense antenna, the "Antenna" relay, K-102, is energized through an appropriate contact on S-305, the function selector switch in the control box.

Note

See table 4-1 for reference symbol numbers of corresponding components for Control Panels C-403A/A, C-758/A and C-1514/A.

(b) The operation of relay K-102 makes the following circuit changes:

1. Removes plate and screen supply from the loop amplifier V-101 and modulator V-102.

2. Removes plate and screen supply from the compass amplifier V-114.

3. Switches CW-VOICE circuit from the tone oscillator V-109B to the beat frequency oscillator V-110A. See paragraph 3.*c*(4), this section, on CW-VOICE operation, for an explanation of the purpose of this change.

4. Removes power from the vibrator inverter unit Y-101.

5. Removes short from holding coil of K-102, to decrease current drain and prevent overheating of the pull-in coil.

c. These changes cut out the unused portions of the circuit, so that no loop signal voltage will enter the receiver, and so that vibrator Y-102 will not be needlessly operated.

(4) LOOP OPERATION. *(See figures 4-5, 4-6, 4-7, and 4-8).*

(a) When the instrument is used for reception with the loop antenna, the "Loop" relay, K-101, is energized through an appropriate contact on S-305, the function selector switch in the control box.

(b) The operation of K-101 makes the following circuit changes:

1. Disconnects and grounds the sense antenna.

2. Grounds (through a capacitor) the antenna terminal on the IF trap Z-101; this capacitor simulates the sense antenna so that circuit conditions will be unchanged.

3. Ungrounds the cathodes of loop control tubes V-115 and V-116, thereby preventing automatic loop operation.

4. Removes short across R-108. This causes the grid of V-102B to be substantially returned to its cathode instead of ground since R-108 is considerably greater than R-109. This change decreases the bias on V-102 making it a conventional class A RF amplifier. V-102A remains cut off due to the slight increase in bias resulting from the increased conduction of V-102B. Thus, no cancellation of the loop signal takes place as explained previously in paragraph 2.*b*.(1)*(b)*.

5. Short-circuits the primary of modulation transformer T-119. This effectively removes the modulating voltage from V-102. This method is used because it is necessary to keep the vibrator inverter unit, Y-101, operating to furnish power for the loop drive and indicator circuits.

6. Removes short from resistors R-184 and R-1109, two of the cathode bias resistors for V-106. This decreases the gain of the first IF stage to decrease noise level.

7. Switches CW-VOICE circuit from tone oscillator V-109B, to beat frequency oscillator V-110A. See paragraph 3.*c*(4), this section, on CW-VOICE operation, for an explanation of the purpose of this change.

8. Disconnects shunt capacitor C-1150A from "Hi-Z" winding of loop drive motor, B-701 in R-101/ARN-6 only. The resonating effect of this capacitor is not needed when manual control is used. (This function is not required in R-101A/ARN-6).

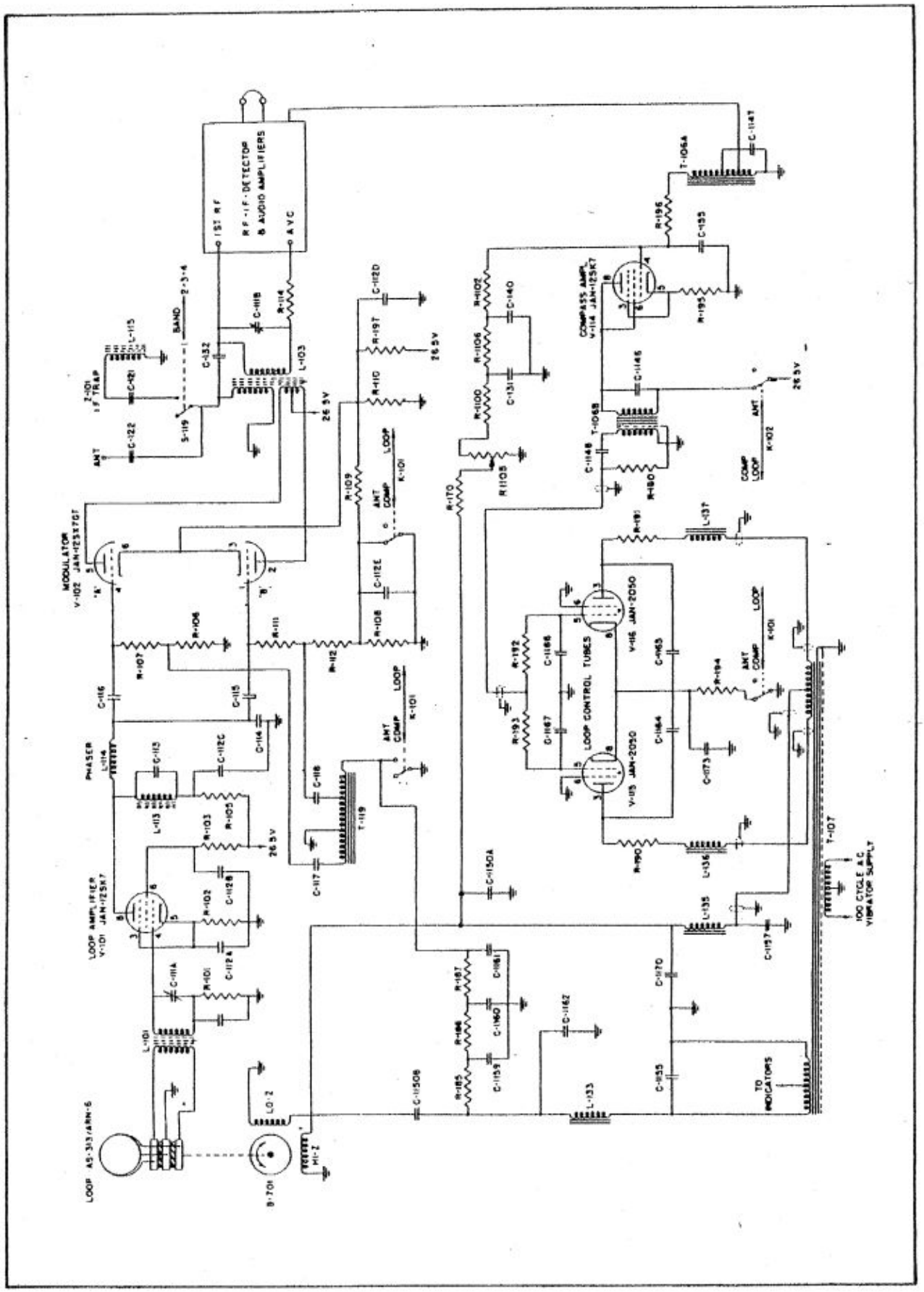

Figure 4-6. Functional Diagram—Compass and Loop Control Circuits of Radio Compass Unit R-101A/ARN-6

9. Removes short from holding coil of relay K-101, to decrease current drain and prevent overheating of the pull-in coil.

c. These changes are intended principally to cut out sense antenna signal, and permit the loop signal to get through V-102.

c. CONTROL BOX C-149/ARN-6 OR C-149A/ARN-6. *(See figure 8-1, 8-2, 8-3, or 8-4.)*

(1) GENERAL.—The control box includes: a function selector switch which makes proper connections for automatic compass, loop, or antenna reception; an audio control; a "CW-VOICE" switch; a phone jack, and other components needed for proper operation. All but the first one of these controls are discussed under the specific circuit applications in paragraph 3., this section, as are the individual circuits to which they pertain. The tuning dial and drive mechanism (figure 4-21) is also contained in the control box. The tuning crank turns the flexible shaft by a 1:2 pair of bevel gears, and the dial through a 32:1 (approx.) spur gear train.

(2) COMPASS OPERATION.

(a) Terminal J of the control box is connected to the +26.5-volt battery supply. When the function selector switch S-305 is in any position other than "OFF", S-305B connects this supply to: receiver tube filaments through terminal "L"; dial light E-307; plate (pin 5) of tuning indicator tube V-113 by way of M-301; band switch S-303; control change-over switch S-301; "CW-VOICE" switch S-306.

(b) Appropriate volume control circuits are set up; see paragraph 3.*d.*, this section.

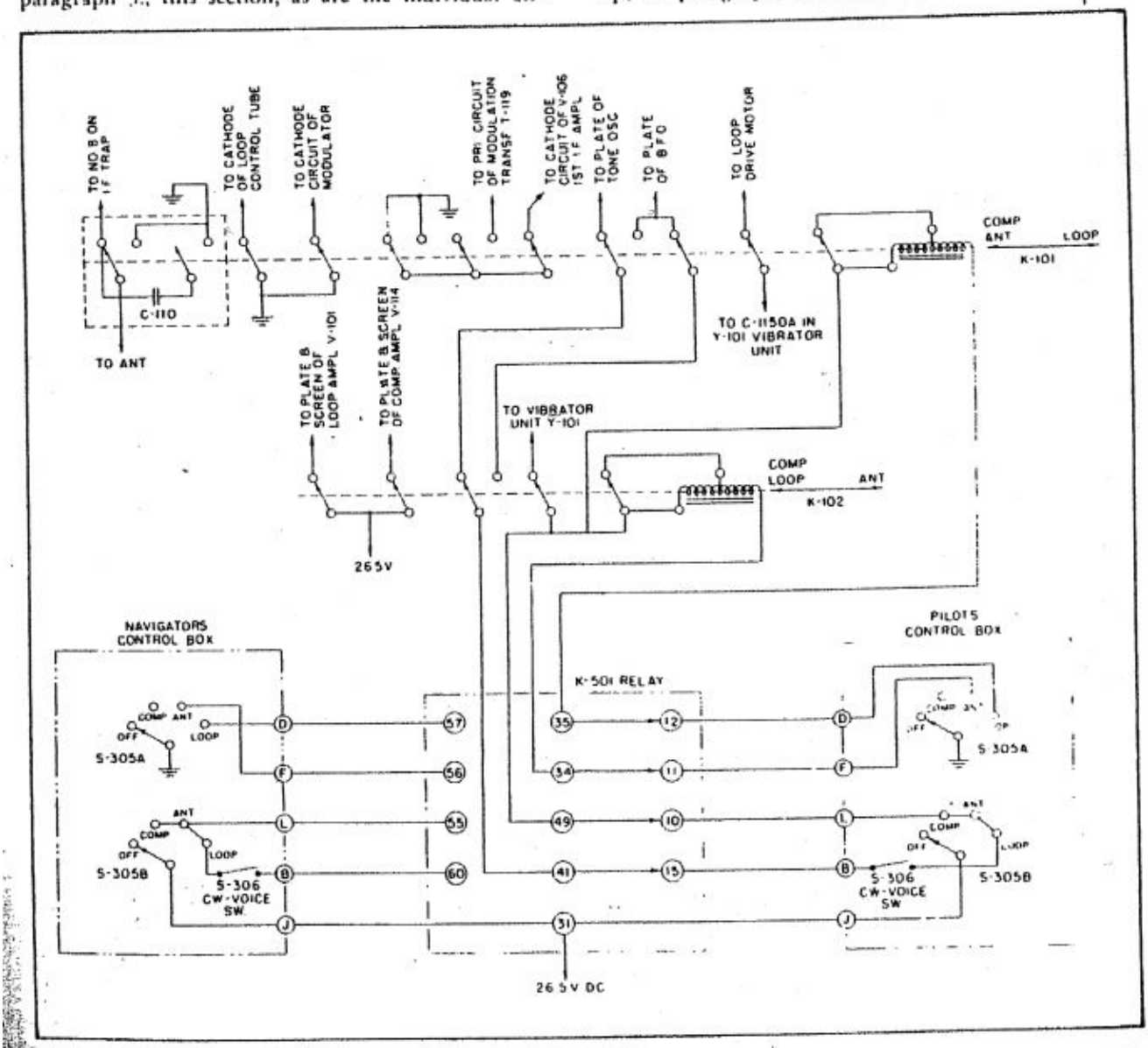

Figure 4-7. Functional Diagram—Antenna and Loop Relay Circuits of Radio Compass Unit R-101/ARN-6

(3) ANTENNA OPERATION.

(a) The equipment is turned on as in paragraph (2)*(a)* above.

(b) Terminal F is grounded, which operates relay K-102 in the receiver, setting up proper receiver circuits.

(c) Appropriate volume control circuits are set up; see paragraph 3.*d.* following:

(4) LOOP OPERATION.

(a) The equipment is turned on as in paragraph (2)*(a)* preceding.

(b) Terminal D is grounded, which operates relay K-101 in the receiver, setting up proper receiver circuits.

(c) The arm of the "LOOP L-R" control, R-306, is grounded, permitting manual control of the loop drive motor.

(d) Through S-304, R-307, DC is impressed on the high impedance ("Hi-Z") winding of loop drive motor B-701. This has a powerful damping or braking effect when the R-306, S-304, is in center position. When the manual control calls for loop rotation, S-304 cuts R-307 into the circuit, cutting out all the damping current except a very small amount to improve steadiness.

(e) Appropriate volume control circuits are set up; see paragraph 3.*d.* following.

d. INDICATORS.—All of the different types of indicators are mechanically and electrically similar. Each indicator consists of an autosyn (synchro) motor, with a direct-mounted pointer; each has a manually rotatable azimuth scale, adjustable by means of a knob. The mechanical differences are in pointer position (at electrical zero), size, scale diameter and marking, and luminous painting. Electrically, the autosyn motors assume the same angular positions as a corresponding unit in the loop antenna. See paragraph 3.*a.*(4), this section.

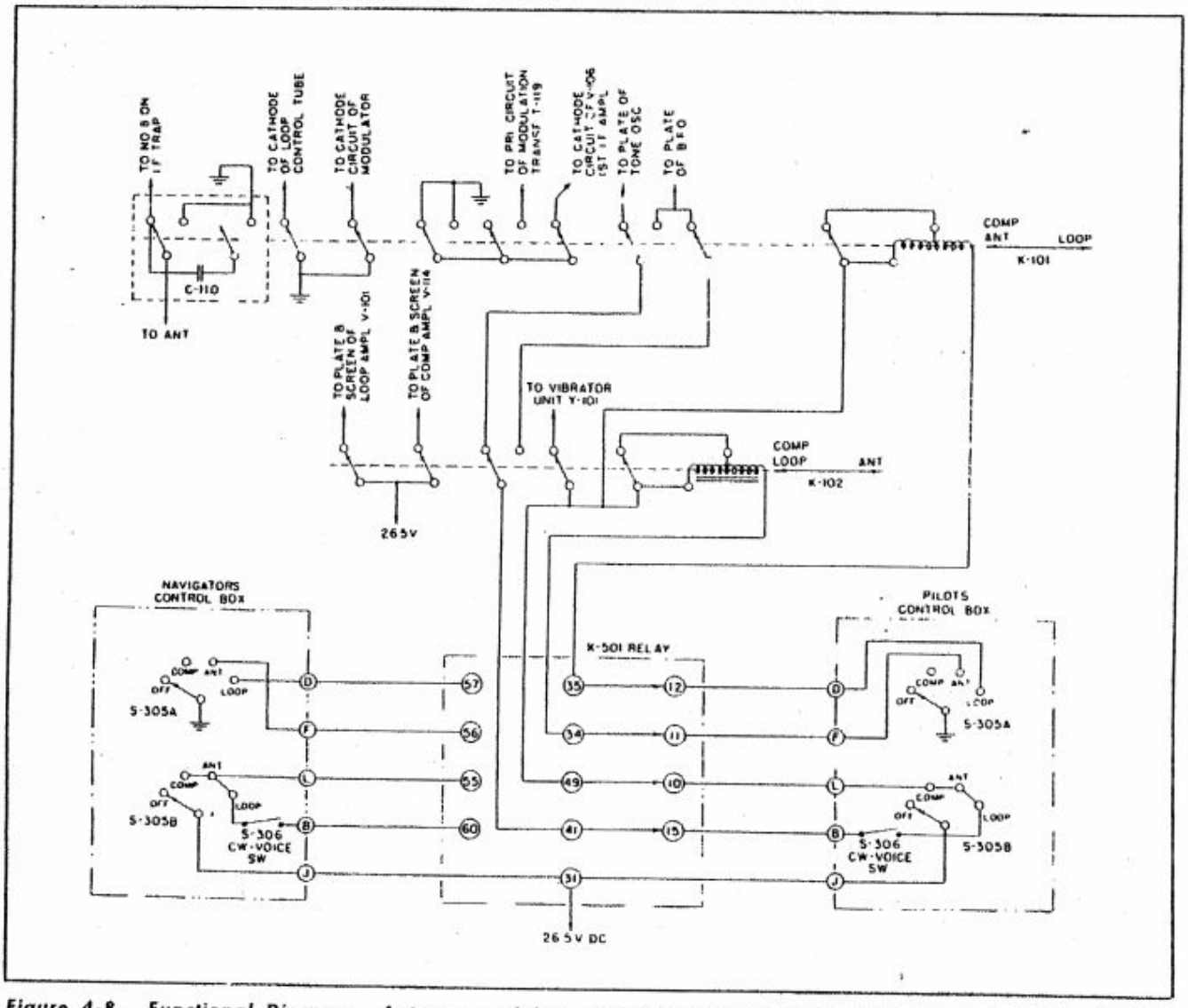

Figure 4-8. Functional Diagram—Antenna and Loop Relay Circuits of Radio Compass Unit R-101A/ARN-6

dA. CONTROL PANELS C-403A/A AND C-758/A *(See figures 8-10A and 8-10D).*

(1) GENERAL.—The control panel includes: a function selector switch which makes proper connections for automatic compass, loop, or antenna reception, and a circuit for taking control in dual control installations; a "VOLUME" control; a "CW-VOICE" switch; and other components needed for proper operation. With the exceptions that the function switch and the control button of Control Box C-149/ARN-6 are both combined into the function switch of Control Panels C-403A/A and C-758/A and that the instrument illumination is electrically controlled in Control Panel C-403A/A, the operation parallels that of Control Box C-149/ARN-6. *(See paragraph 2c, this section).* In addition, Control Panel C-403A/A is equipped for internal illumination of its plastic panel. This lighting circuit is designed to operate from the aircraft's 28 volt lighting circuit, and has nothing to do functionally with the operation of Radio Compass AN/ARN-6. Control Panel C-758/A has one dial lamp and four panel lamps which light when the panel has control, giving in effect ultra-violet illumination. No provision is made for adjusting the intensity of the lamps on either Control Panel C-758/A.

(2) CORRESPONDING COMPONENTS. — The corresponding components, identified by reference symbols, between Control Box C-149/ARN-6 and Control Panel C-403A/A are listed in table 4-1.

dB. CONTROL PANEL C-1514/A *(See Figure 8-10C).*

(1) GENERAL.—The control panel includes: a function switch which makes proper connections for automatic direction finder, loop, or antenna reception, and a circuit for taking control of dual control installation; a "VOLUME" control; a "CW-VOICE" switch; and other components needed for proper operation. Control panel C-1514/A is similar to Control Panel C-403A/A with the following exceptions: (A) No switch is provided to vary dial illumination. (B) No tuning meter is mounted in the Control Panel. (A terminal is provided on rear of control panel for connection of external tuning meter for installation checks.) (C) The "COMP" position on the function switch of Control Panel C-403A/A is identified as "ADF" on Control Panel C-1514/A.

(2) CORRESPONDING COMPONENTS.—The corresponding components between Control Box C-149/ARN-6, Control Panel C-403A/A and Control Panel C-1514/A are identified by reference symbols and are listed in Table 4-1.

Table 4-1. Corresponding Components, Control Box C-149/ARN-6, Control Panel C-403A/A, Control Panel C-758/A and Control Panel C-1514/A

C-149/ARN-6	C-403A/A	C-758/A	C-1514/A
E307	I101 and I102	I102	I-1
X301	R101, R102, R109, R110 and S105	Not included	Not included
M301	M101	M101	Not included
R301	R107	R107	R-1
R302	R103	R103	R-3
R303	R105	R105	R-5
R304	R106	R106	R-2
R306	Part of S103	Part of S103	Part of S-3
R307	R108	R108	R-4
S301	S102F	S102F	S-2F
S303	S101	S101	S-1
S304	S103	S103	S-3
S305	S102	S102	S-2
S306	S104	S104	S-4
P301	Harness	J101	P-101
J301	Not included	Not included	Not included
Not included	I103, I104, I105, I106 and I107	I101, I103, I104, and I105	I-2 and I-3

3. CIRCUIT FEATURES.

This paragraph gives a functional analysis of portions of the entire circuit, where an explanation is deemed advisable, or of interest. Where specific mention is made of Control Box C-149/ARN-6, occasional reference to table 4-1 may be necessary to understand the operational counterpart of the control panels.

a. LOOP CONTROL AND INDICATOR CIRCUITS. *(See figures 4-5, 4-6, and 4-9.)*

(1) Since the receiver, Radio Compass Unit R-101/ARN-6 or R-101/ARN-6, is primarily designed for the automatic control of the loop, this function is fully described in paragraph 2.*b.*, this section. Figure 4-5 or 4-6 is recommended for study, in preference to the complete schematic, since all bandswitching is omitted and the ordinary RF and IF circuits indicated only as a block.

(2) When using loop reception instead of automatic compass, the thyratron circuit controlling the loop drive is made ineffective by opening the common cathode return for V-115 and V-116 with a contact of K-101. The manual control is made effective by grounding the arm of "LOOP L-R" control R-306 in the control box. R-306 then substitutes for the thyratrons in a similar circuit; each side becomes equivalent to one of the thyratrons. Whenever R-306 is in its released position, S-304 is closed, shorting R-307; a DC damping current passes through one winding of the motor, B-701, to act as a brake on the loop. But when R-306 is turned to operate B-701, S-304 opens, cutting in a resistance sufficient to reduce the damping current to a negligible value.

(3) In order to provide a suitable control for "hunting" of the loop—that is, small oscillations about its null point when operating as an automatic radio compass—a negative feedback system is provided. Refer again to figure 4-5. The "Hi-Z" winding of B-701 is the winding controlled by the thyratrons. The sig-

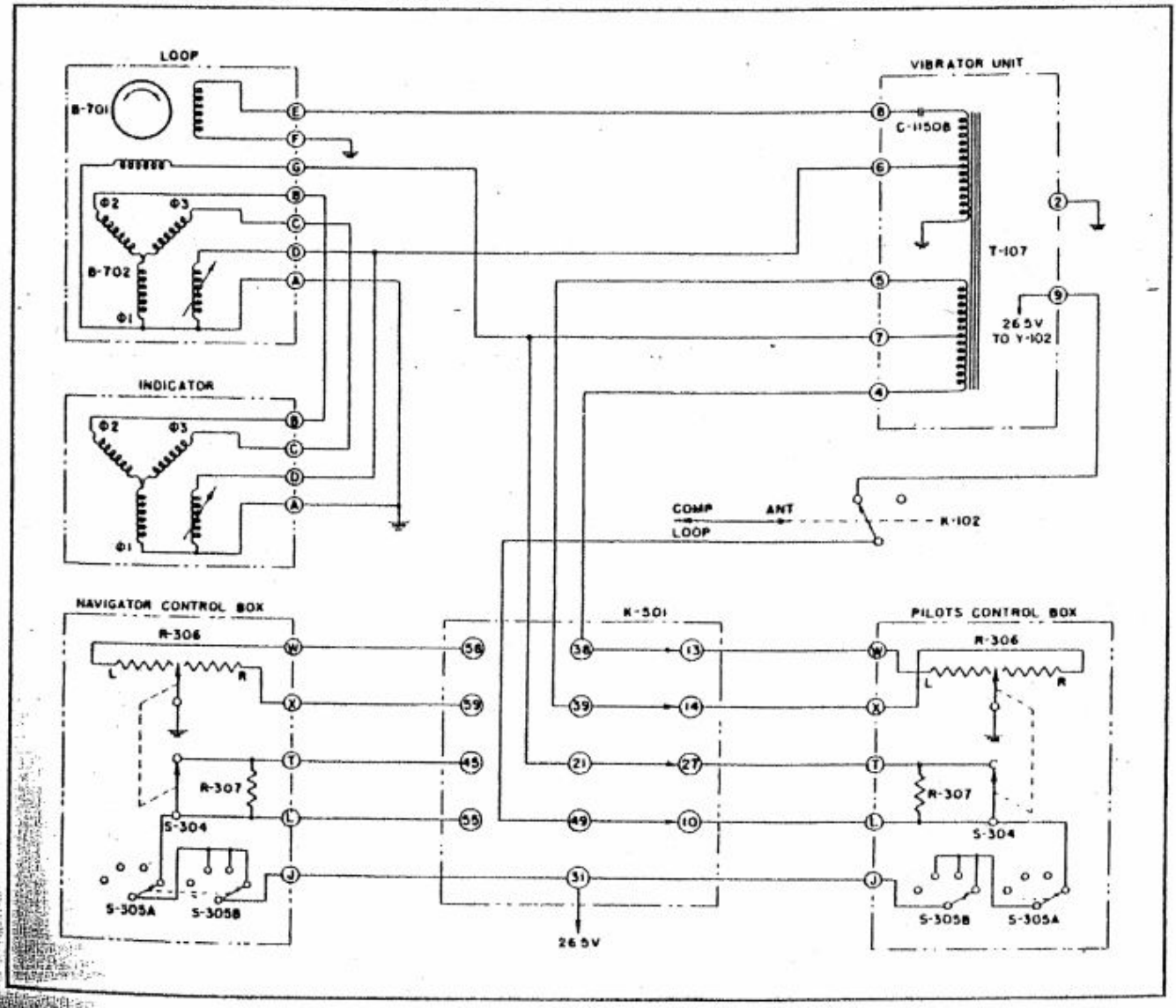

Figure 4-9. Functional Diagram—Manual Loop L-R Control and Indicator Circuits

nal impressed on this winding also is applied to the voltage dividing system R-170 and R-1105. A portion of the signal voltage, selected by the setting of R-1105, is attenuated and well-filtered by the RC network R-1100, C-131, R-1106, C-140, and R-1102. The signal appearing at the output of this network is applied to the grid of the compass amplifier V-114, along with the operating signal. The phasing of this feedback signal is negative—that is, it tends to counteract the original signal. In practice, the magnitude of the feedback signal is increased by adjusting R-1105, so that hunting just stops, the adjustment being made under standard test conditions with a signal strength of 100,000 microvolts per meter.

(4) Related to the loop control system is the indicator system. In the loop is an Autosyn (synchro) transmitter, B-702, whose rotor winding is energized from Y-101. The terminals of the "Y"-winding are connected to the corresponding terminals of the indicators, which have similar Autosyns. The rotors of the indicator Autosyns are connected to the same source as that of B-702. The indicators consequently repeat the position of B-702, and hence the corrected loop position. [See paragraph 2.a.(4) of this section.]

b. BAND-SWITCH CIRCUIT. *(See figure 4-10.)*

(1) B-101, which operates the band-switch mechanism, is a series motor and will run if either field is connected to 26.5 volts positive; its direction of rotation will depend upon which field is used.

(2) The arm of band switch S-303 is energized from the battery supply through the indicated section of S-305.

(3) Assume that switch S-303 is turned to some other band, for example, to position II (Band 2). By tracing the circuit, it can be seen that one of the motor fields (the lower one in this drawing) is energized through one segment of band follow-up switch S-126.

(4) The motor will run, operating the band-switch mechanism. The segments of switch S-126 will rotate with the mechanism, until the gap, now shown at the contact for band 1, has rotated to the contact for band 2. When the gap reaches the band 2 contact, the circuit is broken and the motor stops.

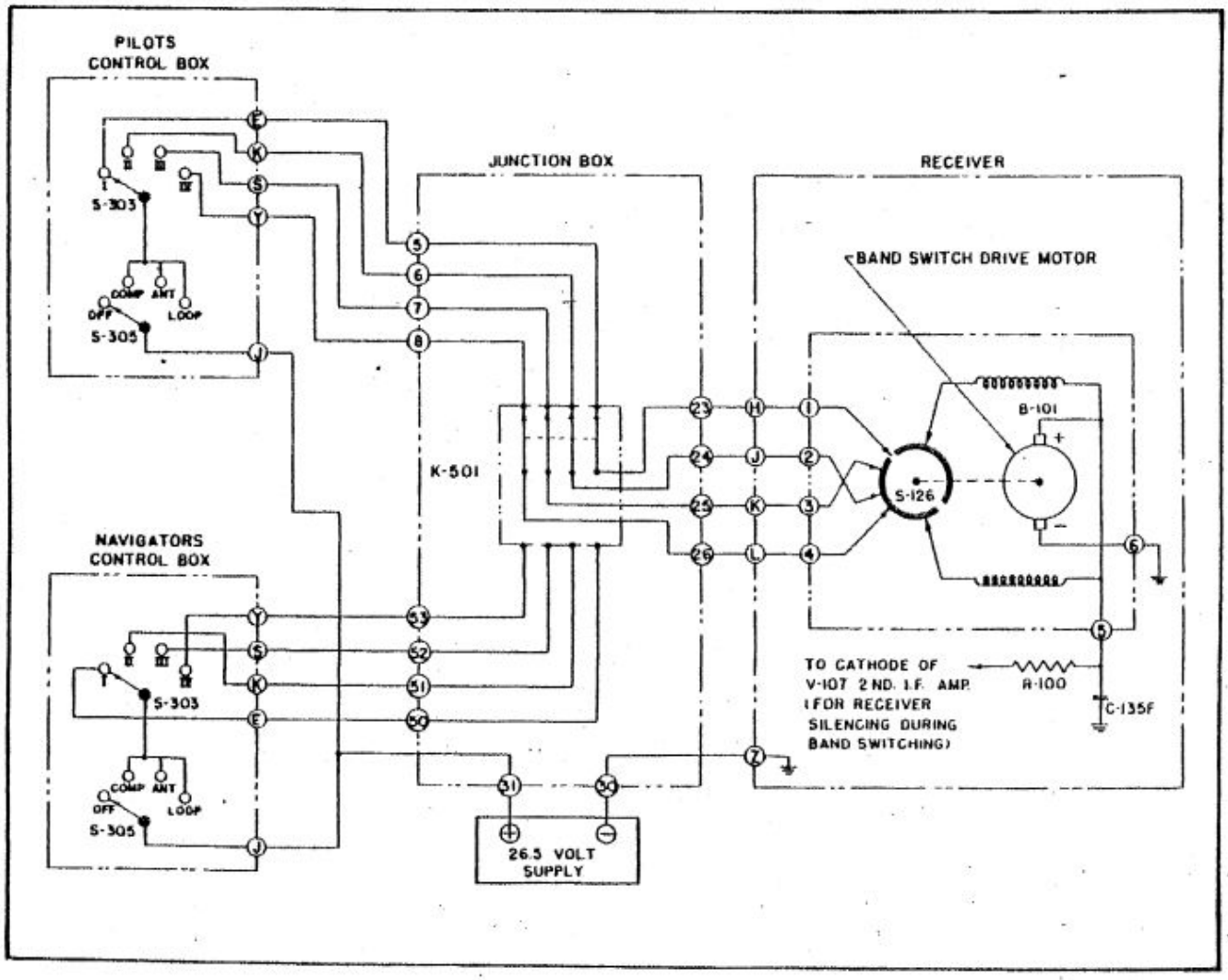

Figure 4-10. Functional Diagram—Band Switch Drive Circuits

(5) With the mechanism in band 2 position, if S-303 is now turned back to band 1, the other field winding of B-101 is energized, and the motor rotates in the opposite direction until the proper position is reached.

(6) In this manner, the motor operates for every change of S-303, so that the band-switch mechanism will come to rest in the desired position. It should be noted that the successive positions of the mechanism are in the sequence 1-3-2-4; this sequence is used for better electrical and mechanical design of the RF transformer assemblies.

(7) Every time the motor operates, the portion of the operating voltage which appears across the armature is applied through R-100 to the cathode of V-107, the second IF amplifier; this bias is sufficient to cut the tube off, and is used to silence the receiver during the switching operation.

c. "CW-VOICE" SWITCH AND CIRCUITS. *(See figure 4-11 or 4-12.)*

(1) The "CW-VOICE" switch S-306 in the control box, when put in CW position, makes provisions for reception of CW signals by one of two different methods.

(2) If compass operation is selected, a 900-cycle audio or tone oscillator (V-109B) is controlled by S-306. This gives suppressor grid modulation of the incoming signal applied in the second intermediate frequency tube, V-107.

(3) If either antenna or loop reception is selected, K-101 or K-102 is operated, so that S-306 controls the beat frequency oscillator V-110A. (See also figure 4-7 or 4-8.)

(4) The tone oscillator is used in compass operation because the amplitude of the tuning meter indication is dependent solely upon the accuracy of tuning. No "zero-beat" exists, to mislead the operator. For other than automatic compass operation, the beat-frequency oscillator is used to make audible the CW signals. In this case, the pitch can be adjusted to suit the operator, by very small motions of the tuning dial. Moreover, it results in better signal-to-noise ratio and leaves no residual modulation when not tuned to a carrier.

d. AUDIO AND SENSITIVITY CONTROLS. *(See figures 4-13 and 4-14.)*

(1) The method of audio volume control is different for compass operation and ordinary reception;

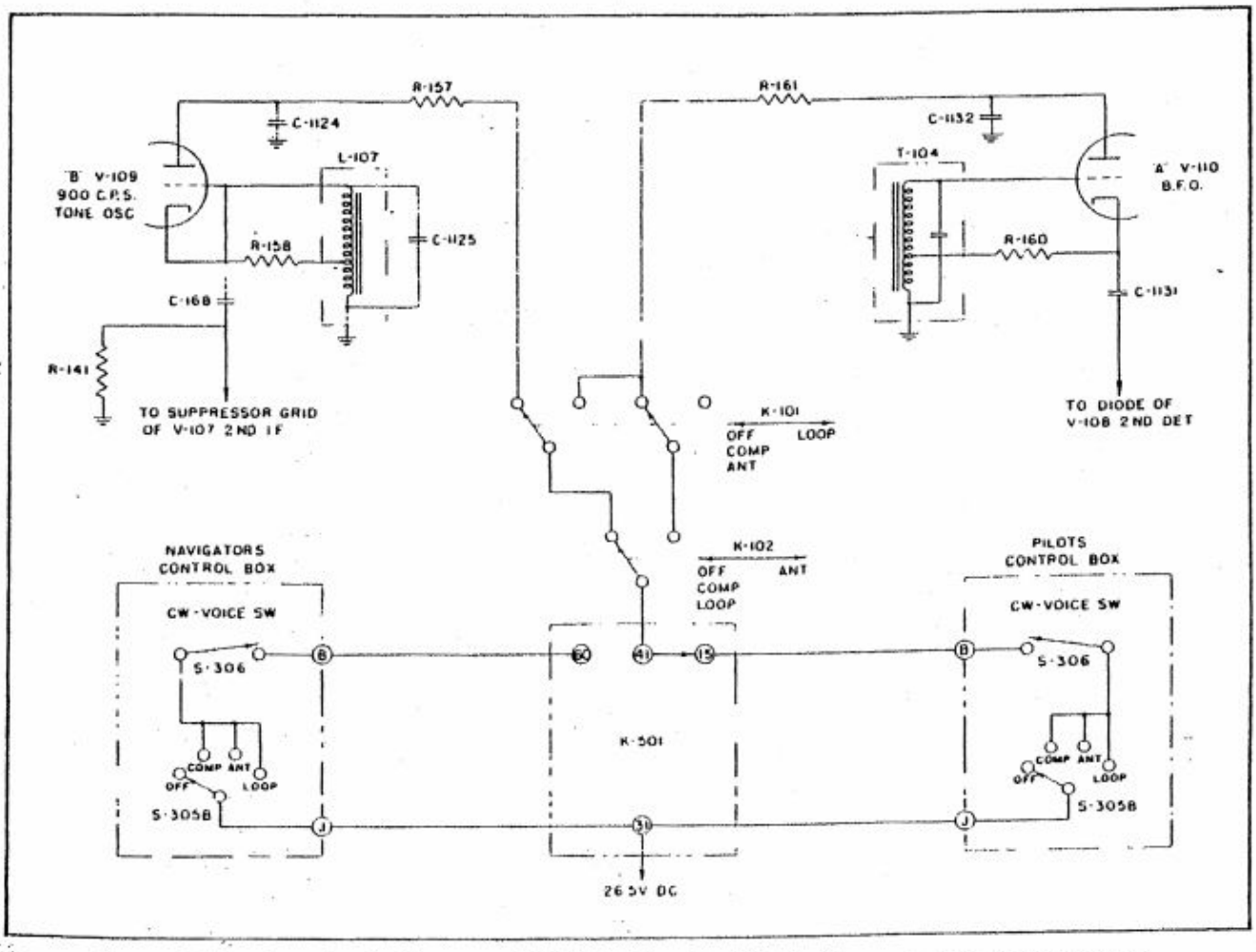

Figure 4-11. Functional Diagram—CW-Voice Circuit of Radio Compass Unit R-101/ARN-6

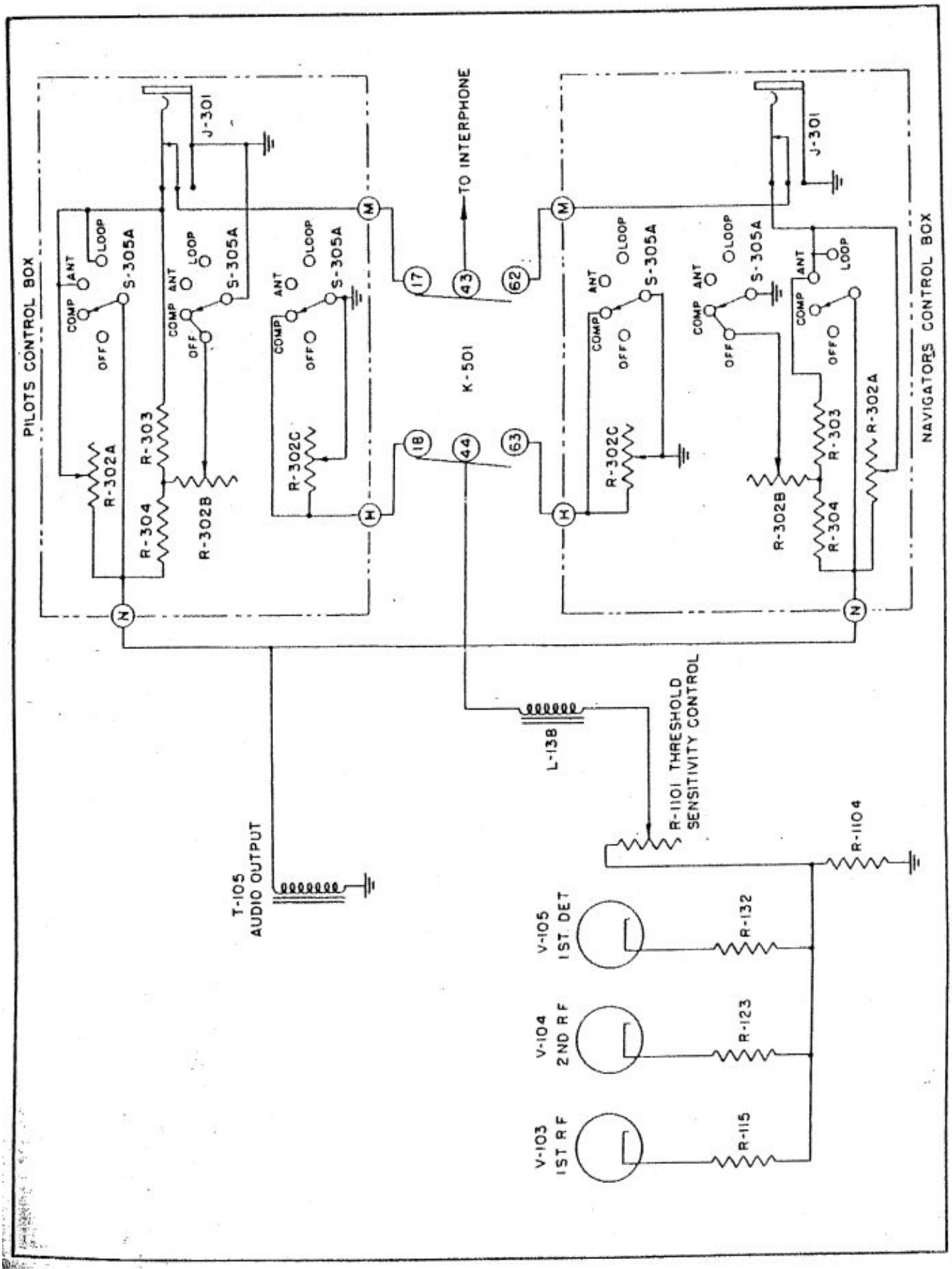

Figure 4-13. Functional Diagram—Audio and Sensitivity Control of Radio Compass Unit R-101/ARN-6

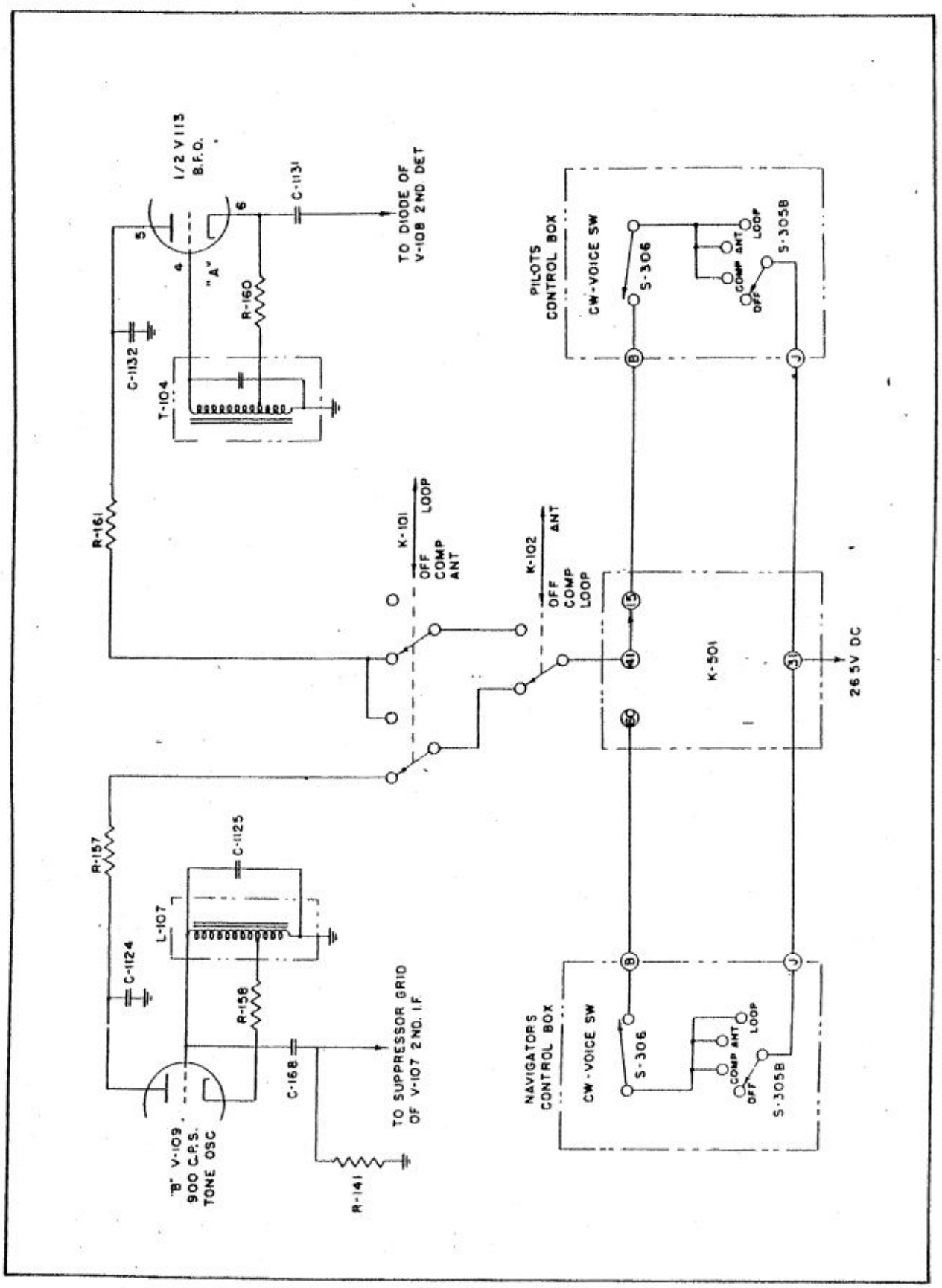

Figure 4-12. Functional Diagram—CW-Voice Circuit of Radio Compass Unit R-101A/ARN-6

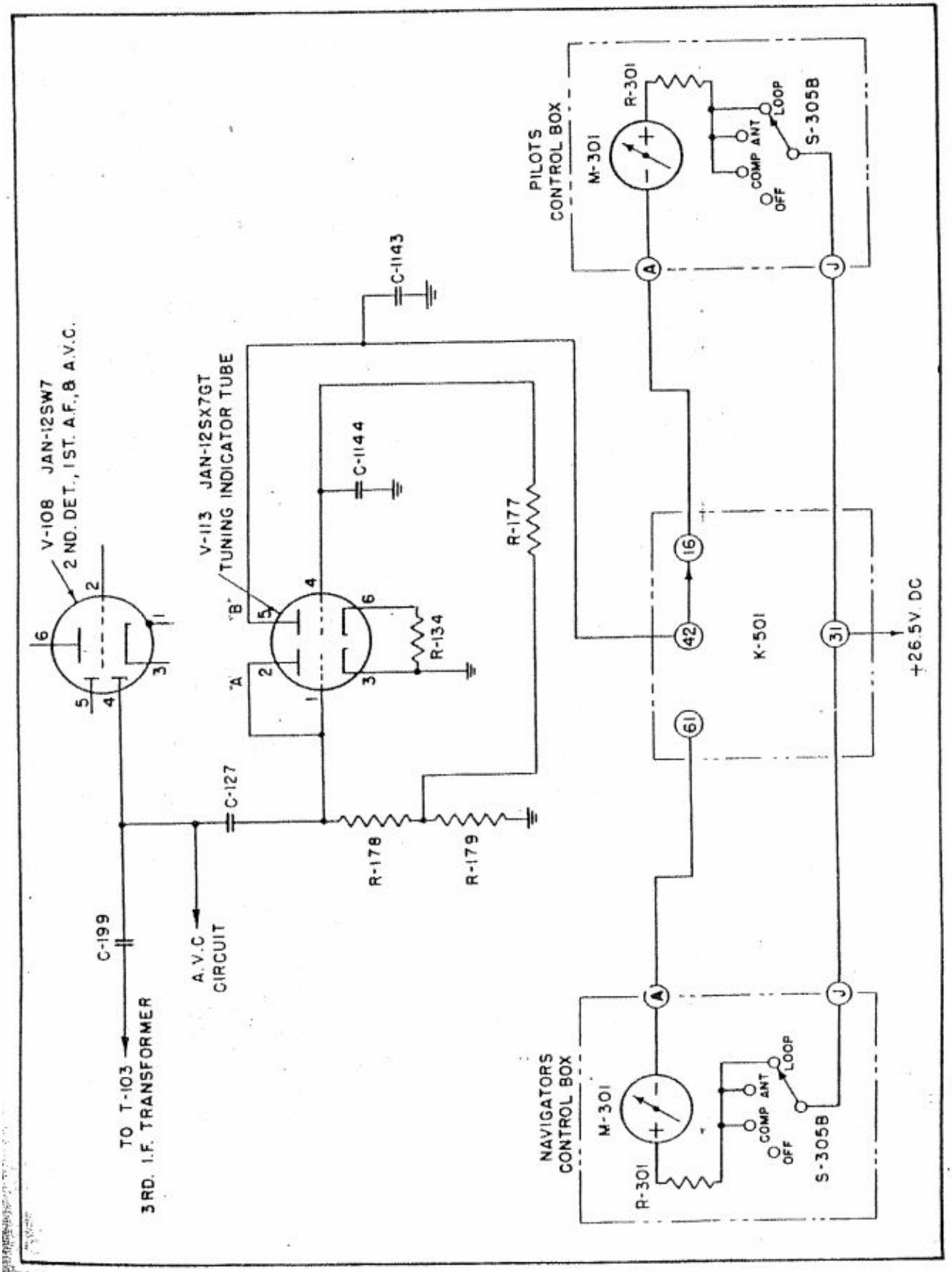

Figure 4-15. Functional Diagram—Tuning Indicator Circuit of Radio Compass Unit R-101/ARN-6

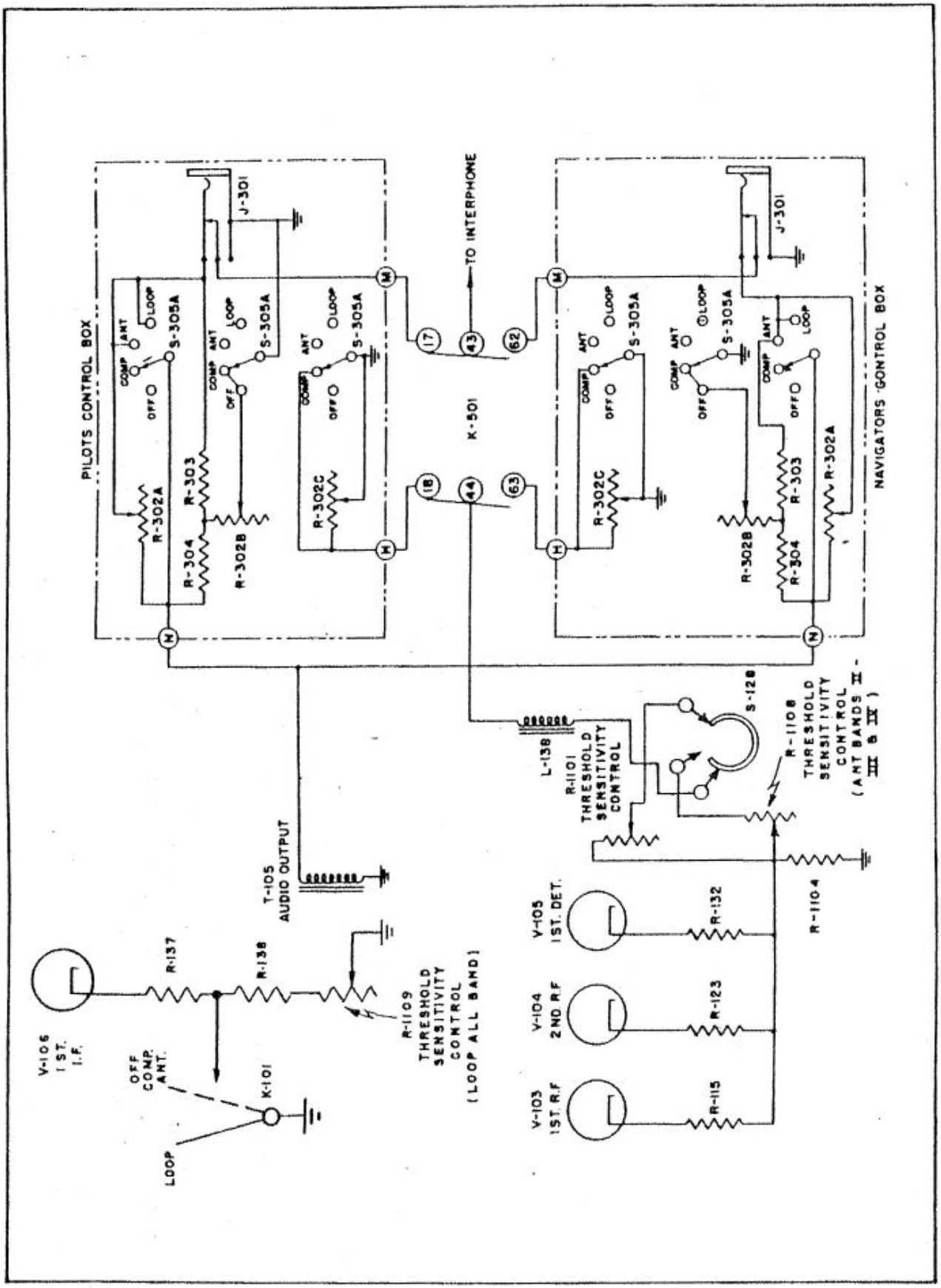

Figure 4-14. Functional Diagram—Audio and Sensitivity Control of Radio Compass Unit R-101A/ARN-6

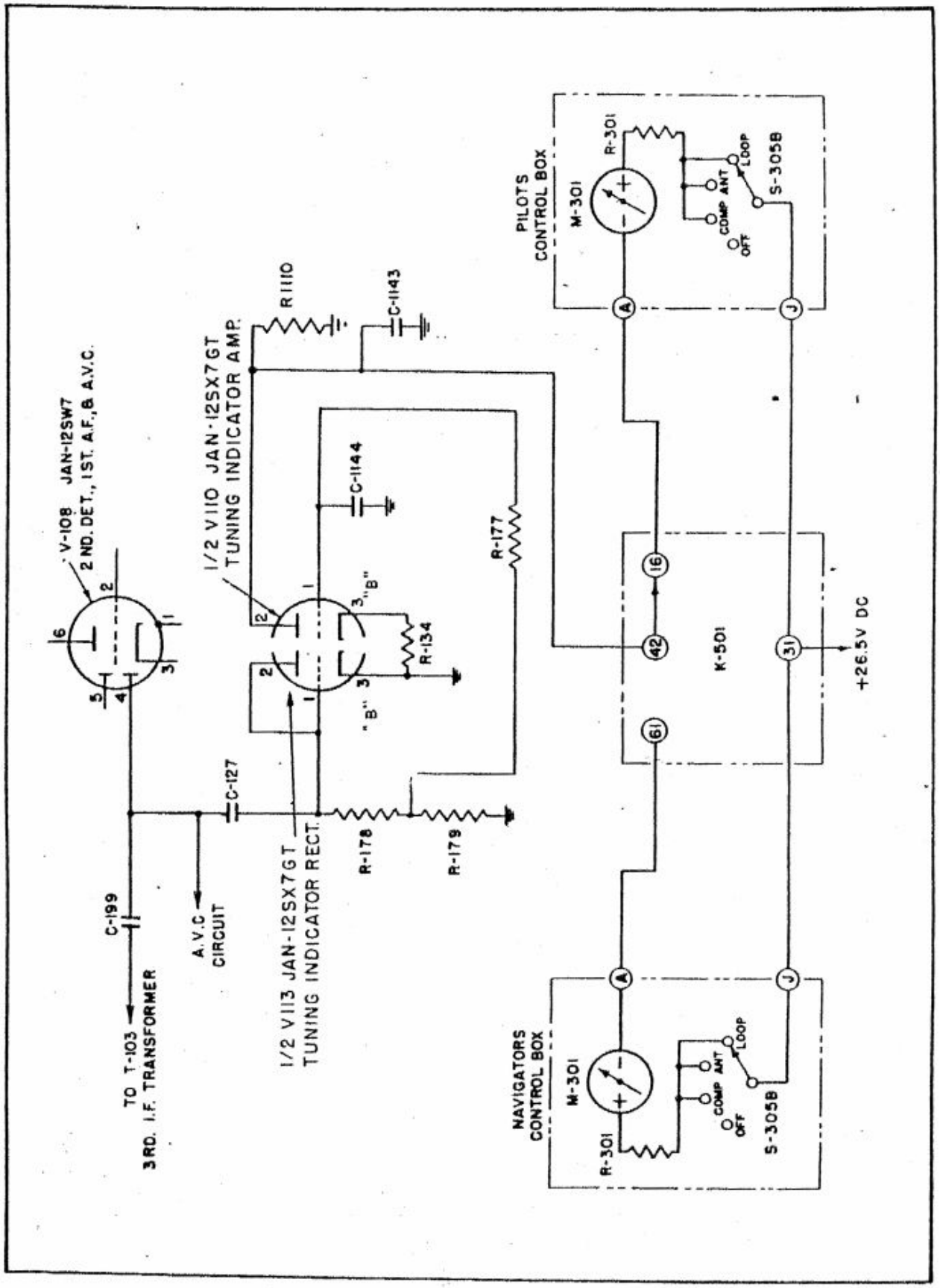

Figure 4-16. Functional Diagram—Tuning Indicator Circuit of Radio Compass Unit R-101A/ARN-6

these differences are accomplished by connections to switch S-305A in the control box.

(a) With S-305A set for automatic compass operation, the audio volume is controlled by a bridged-T attenuator (R-303, R-304, R-302A, R-302B) in the control box.

(b) With S-305 set for antenna and loop reception, the bridged-T attenuator is cut out of the circuit, and volume control is accomplished entirely by varying the RF gain. This is accomplished by audio control resistor R-302C, which is in series with the cathodes of V-103, V-104, and V-105.

(2) The threshold sensitivity controls, R-1101, R-1109, and R-1108, are factory or service adjustments; they set the maximum RF gain by the cathode bias method, which can be reduced by audio control R-302C during loop or antenna reception. R-1101 is used in R-101/ARN-6, and R-1101, R-1107, and R-1108 are used in R-101A/ARN-6.

e. TUNING INDICATOR CIRCUIT. *(See figure 4-15 or 4-16.)*

(1) The output of the second IF stage is fed to diode No. 2 (pin 4) of V-108, through C-199. The rectified voltage is used for the AVC system, but the "ripple" component is fed through coupling capacitor C-127 to 1/2 of V-113, connected as a diode.

(2) The rectified output of V-113 appears across the load R-178, R-179; and a definite proportion of this voltage is applied to the grid of V-113B (in R-101/ARN-6) or V-110B (in R-101A/ARN-6) through the filter R-177 and C-1144.

(3) V-113B (of R-101/ARN-6) and V-110V (of R-101A/ARN-6) are DC amplifiers, and their plate current is measured by tuning indicator M-301.

(4) The result is that an increase of signal strength develops a higher voltage across the load of V-113A (in R-101/ARN-6) or V-113B (in R-101A/ARN-6); this gives a higher negative grid voltage on V-113B (in R-101/ARN-6) or V-110B (in R-101A/ARN-6); this reduces the current in M-301, which causes the pointer to move to the right. (M-301 has a right-zero scale instead of the usual left zero.)

f. AVC CIRCUITS. *(See figure 4-17.)*

(1) The output of the second IF stage is fed to diode No. 2 (pin 4) of V-108, through C-199. The rectified voltage appears across the series load resistors R-148 and R-146.

(2) The full AVC voltage across both R-148 and R-146 is filtered through R-147, C-1105, R-145, and C-194. This filtered AVC voltage is applied through R-114 to the grid of the first RF amplifier, V-103.

(3) A selected portion of the AVC voltage is taken from the junction of R-148 and R-146, and is filtered through C-1104, R-149, and C-1103. This filtered AVC voltage is applied through R-119 to the grid of the second RF amplifier, V-104, and through R-127 to the signal grid of the first detector, V-105.

(4) "Delayed AVC," which signifies that there is no AVC action until a certain minimum signal strength is reached, is accomplished by giving V-108 a positive cathode bias by means of resistors R-153 and R-182.

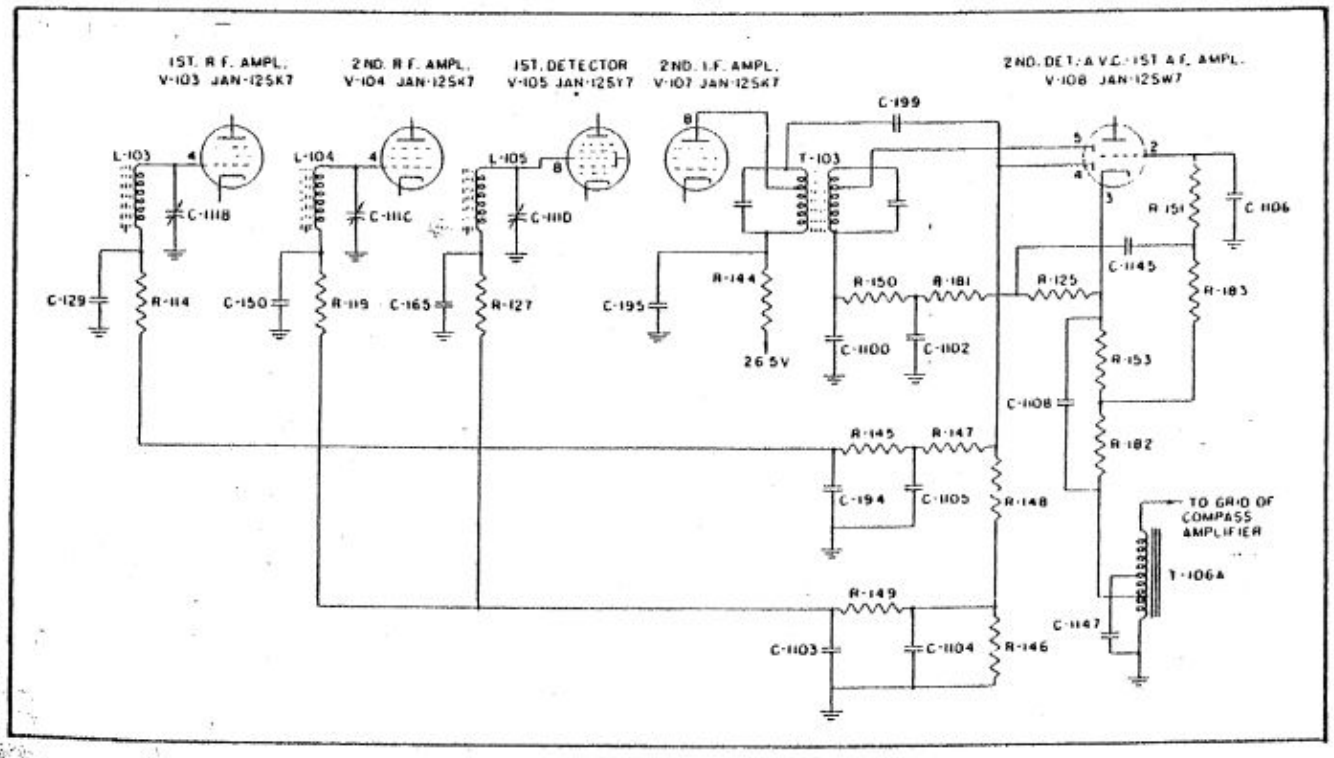

Figure 4-17. Functional Diagram—AVC, Detector, and First Audio Circuit

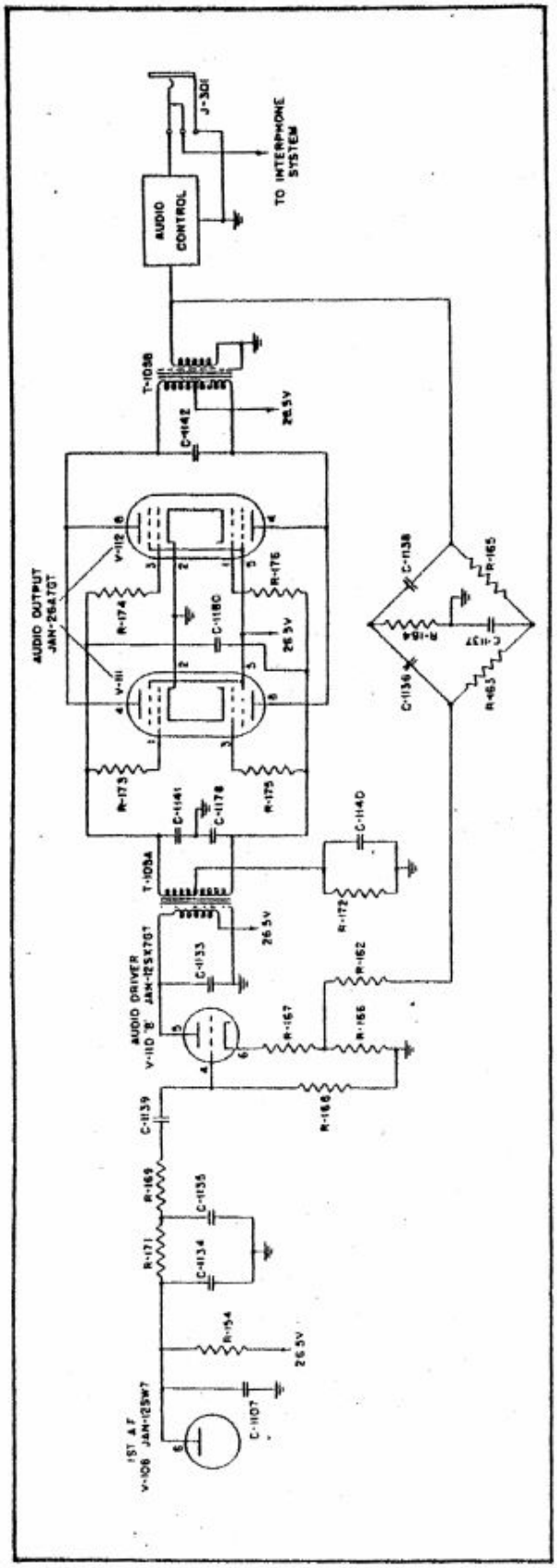

Figure 4-18. Functional Diagram—Audio Driver and Output Circuits of Radio Compass Unit R-101 ARN-6

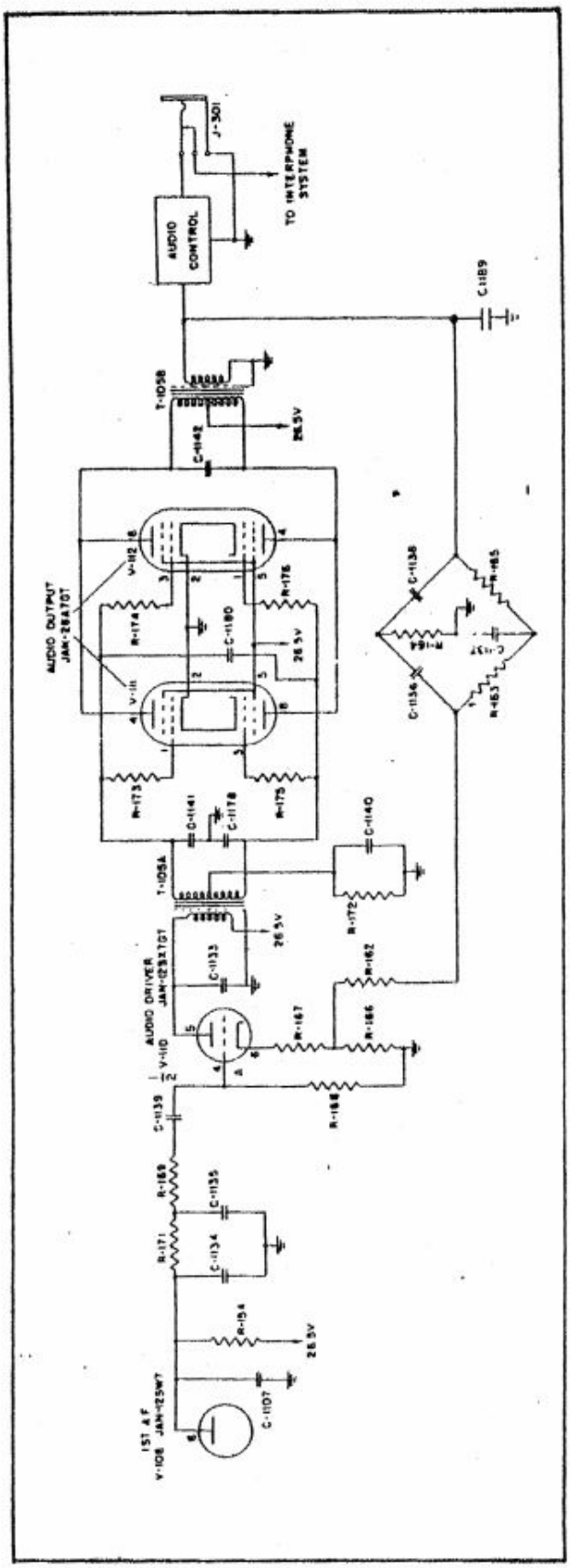

Figure 4-19. Functional Diagram—Audio Driver and Output Circuits of Radio Compass Unit R-101A/ARN-6

No AVC voltage will be developed until the peak signal voltage on the AVC diode plate exceeds the cathode bias.

g. SECOND DETECTOR AND FIRST AF AMPLIFIER. *(See figure 4-17.)*

(1) Diode No. 1 (pin 5) of V-108 is the detector, which rectifies the signal taken from the secondary of T-103. The resulting AF voltage appears across the diode load R-150, R-181, and R-125, which serves also as an IF filter system in combination with C-1100 and C-1102.

(2) That portion of the AF voltage which appears across R-125 is applied to the grid of the triode, through C-1145 and the additional filter R-151, and C-1106.

(3) The grid is returned through grid leak R-183 to the cathode system to such a point that R-153 is a cathode bias resistor.

(4) Resistor R-182 is not involved in this system. Its function is to increase the cathode potential for reasons applicable to the AVC system only.

(5) Audio output, except the 100-cycle loop-control signal, is taken from the triode plate in the usual way, described in paragraph *h.* immediately following.

(6) The 100-cycle component of the plate current, used for loop control, is taken from the cathode circuit and passes through a portion of T-106A, where it is resonated by C-1147. The output of T-106A then goes to the compass amplifier, V-114, and the loop control circuits. See paragraph 3.*a.*, this section.

h. AUDIO DRIVER AND OUTPUT CIRCUITS. *(See figures 4-18 and 4-19.)*

(1) The audio signal appearing at the triode plate of the first AF amplifier, V-108 is filtered of residual IF through the network C-1134, R-171, C-1135, and R-169. It is capacitance-coupled to the grid of the audio driver, V-110B (in R-101 ARN-6) or V-110A (in R-101A ARN-6).

(2) The output of V-110B (in R-101 ARN-6) or V-110A (in R-101A ARN-6) is transformer-coupled by T-105A to the audio output stage, which is two tubes, V-111 and V-112, in push-pull parallel. The grid resistor for this stage, R-172, is connected from the center tap of the input transformer secondary to ground, and is bypassed by capacitor C-1140. From each end of the secondary there is a capacitor connected to ground, C-1141 and C-1178; these capacitors bypass the audio frequencies beyond the useful range, to prevent squealing which might otherwise occur.

(3) V-111 and V-112 are beam power tubes, and especially designed for operation with 26.5v on the plates. Operation of the tubes is class AB_2, inasmuch as the plate current, in normal operation, is reduced to a residual value, not cut-off, but for practical purposes equivalent to it. Grid current flows so that the proper grid bias is developed across R-172 and C-1140. Thus, an automatic bias is developed which varies with the signal level and maintains the average operation

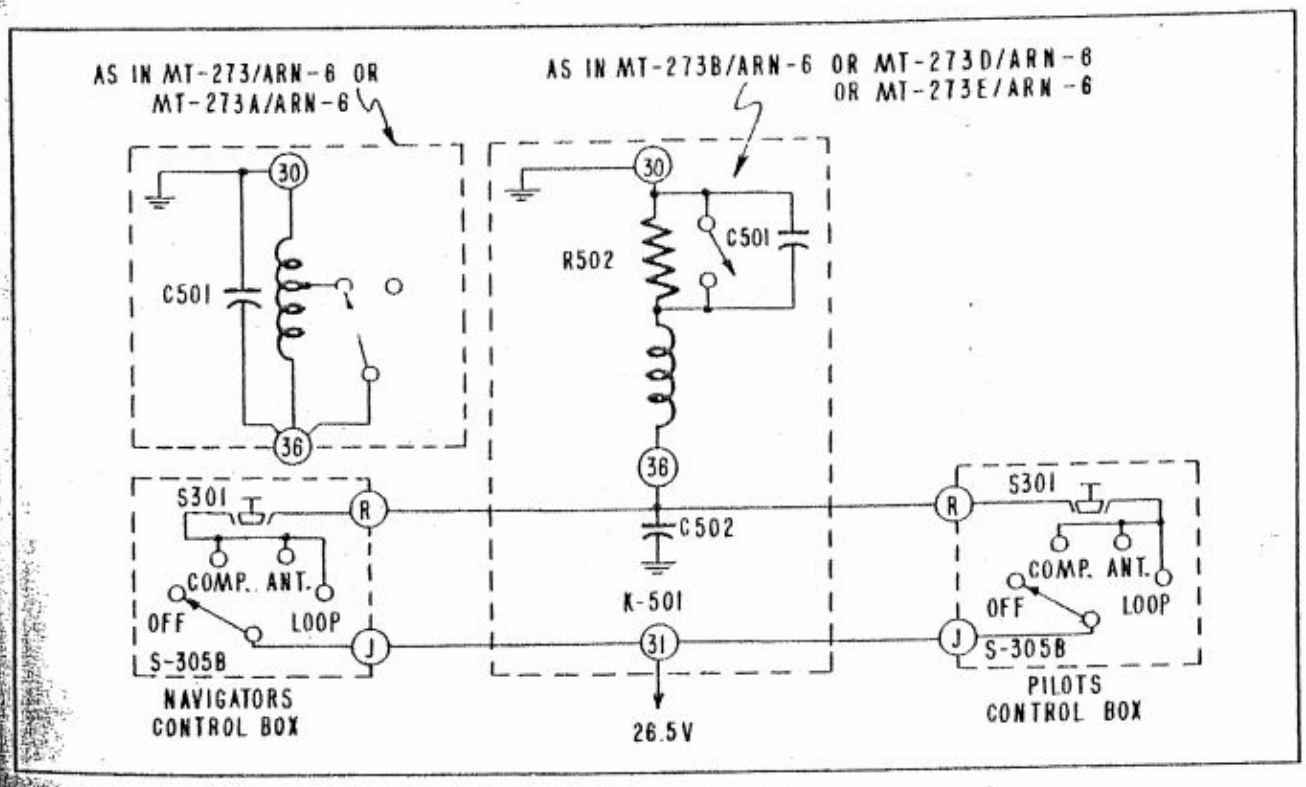

Figure 4-20. Functional Diagram—Control Transfer Circuit

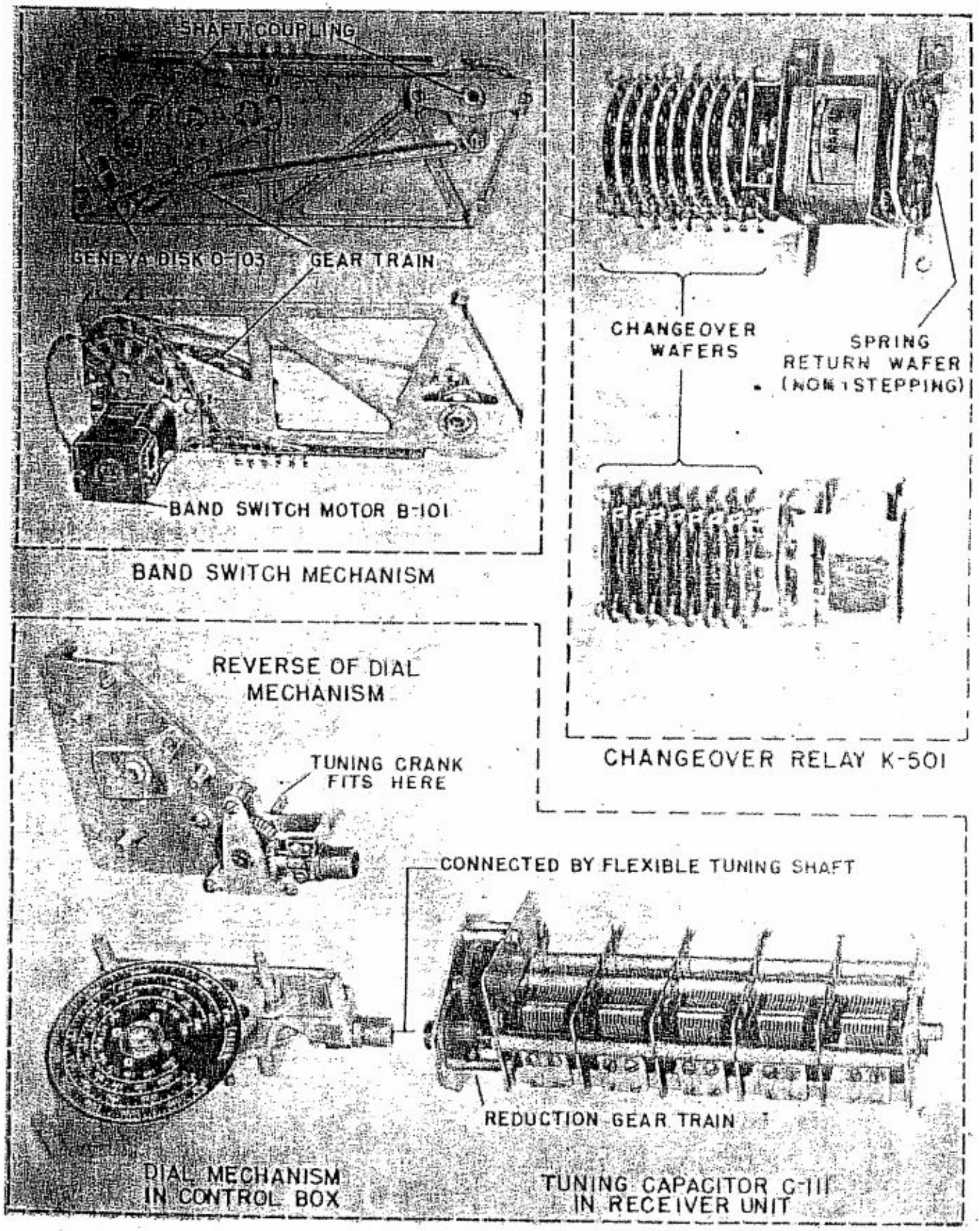

Figure 4-21. Miscellaneous Mechanism

of the tubes as class AB . A parasitic suppression resistor is in series with each control grid.

(4) The plates of the output tubes are connected to the push-pull primary of the output transformer T-105B, which is paralleled with capacitor C-1142 to modify the response, and stop oscillations resulting otherwise from the feedback described below.

(5) The secondary of T-105B is connected to the audio circuits in the control box and thence to the interphone or headphone. It is also connected to a feedback network, R-165, C-1138, C-1137, R-164, R-163, and C-1136. This network is designed to pass 2500 cycles per second; the sharpness of tuning inherent in the network is reduced by using a selectively low impedance load consisting of R-162 and R-166. These two resistors also act as a voltage divider, and since R-166 is used in common with the cathode circuit of the audio driver, V-110B (in R-101 ARN-6) or V-110B (in R-101A ARN-6) a feedback results. The effect of this feedback is to boost the high frequencies.

i. CONTROL TRANSFER CIRCUIT. *(See figure 4-20.)*

Note

This paragraph applies to dual control installations only. In single control installations, no connection is made to terminal "R" of connector J-302, and S-301 has no function.

(1) The circuit by which control is transferred from one control box to the other is quite simple. S-301 is a sensitive switch operated by a push-button located at the center of the band-switch knob on the control box. If this switch should be pressed while the function switch is at any of the three "on" positions, it will energize relay K-501 in receiver Mounting MT-273( ) ARN-6. This relay is a stepping type, such that successive impulses switch receiver connections alternately from one control box to the other.

(2) In mounting MT-273A ARN-6 there is a single switch wafer shown at the lower end of the relay (figures 4-20 and 4-21), which is not connected with the stepping mechanism; it has normally closed contacts. In mountings MT-273B ARN-6, MT-273D ARN-6, and MT-273E ARN-6 this switch is a spring type switch (in place of the previously mentioned wafer switch) operated by a lever on the shaft of the relay solenoid. When the coil is energized, the contacts open, cutting in a high resistance section of the coil, to prevent over-heating in case the button should remain depressed for an appreciable time. The capacitor C-502 is used for spark reduction when S-301 is opened.

(3) Upon operation of K-501, all control box connections are transferred, except the 26.5-volt supply, the audio output, and the ground connections, which are common to both boxes.

SECTION V
MAINTENANCE

1. SERVICE INSEPECTIONS.

Note

It is preferable that the following inspections be made with the airplane at least 250 feet distant from hills, towers, power lines, telephone lines, buildings, and other large electrically-conductive objects which are likely to distort the radio frequency field. For a list of test equipment used with Radio Compass AN ARN-6 see paragraph 10 of this section

a. PREFLIGHT INSPECTION.

(1) This inspection of Radio Compass AN ARN-6 should be a rapidly performed visual and operating inspection to determine if the equipment is in working order. Make a visual check for security of all components and check sense antenna for proper tension and security.

(2) Observe all mechanical controls for correct operation; perform the operational check which follows:

(a) Turn the function switch to "COMP-ADF."

(b) If installation is dual control, check operation of "CONTROL" button or turn the function switch momentarily to "CONT." making certain control can be transferred to and from your control box.

(c) Turn "LIGHT" control fully clockwise, or throw the "LIGHTS" switch to "HI" and "LO" positions, and observe operation of the lamps by noting the illumination of the dial and tuning meter. Check presence of serviceable spare lamps. Control Panel C-758 A has neither "LIGHT" control nor spare lamps.

(cA)—On Control Panel C-1514 A observe operation of the dial lamp by noting illumination of the dial. No spare lamps are provided; however the panel light is interchangeable with the dial lights.

(d) Tune through each band and check the operation of the tuning meter, "AUDIO" or "VOLUME" control, "CW-VOICE" switch and band switch, noting signal strength, accuracy of dial calibration, and indicated bearing of stations of known location.

(e) Turn function switch to "LOOP." Operate "LOOP L-R" switch and observe action of indicator pointer.

(f) Turn function switch "OFF" and if installation is dual control, repeat preceding checks outlined in paragraph 1.a(2), preceding, using the second control box.

b. DAILY INSPECTION.

(1) This inspection should be a thorough visual and operating inspection to determine whether the equipment is in working order. Make a visual check for security of all components. Check the sense antenna for proper tension and security. Inspect the loop housing for damage and replace if cracked.

(2) Observe all mechanical controls for correct operation; perform the operation check which follows:

(a) Turn function switch to "ANT."

(b) If installation is dual control, check the operation of the "CONTROL" button or turn the function switch momentarily to "CONT." making certain control can be transferred to and from your control box.

(c) Turn the "LIGHT" control fully clockwise, or throw the "LIGHTS" switch to "HI" and "LO" positions, and observe the operation of the lamp by noting the illumination of the dial and tuning meter. Check the presence of a serviceable "SPARE" lamp.

(cA) On Control Panel C-1514 A observe operation of the dial lamp by noting illumination of the dial. No spare lamp is provided; however, the panel lights No. AN-3140-327 are interchangeable with the dial light.

(d) Tune through each band and check the operation of the tuning meter, "AUDIO" or "VOLUME" control, "CW-VOICE" switch, and band switch.

(e) Turn the function switch to "LOOP." Operate "LOOP L-R" switch and observe indicator for direction and speed of loop rotation, which is controlled by direction and amount of "LOOP L-R" switch rotation, respectively. Check for smoothness of rotation at both high and low speeds, taking into consideration small variations resulting from deviation corrections. Tune in a station and check to see if, during 360 degrees rotation of the loop, two nulls are indicated. Nulls may be identified by reduction in volume of the audible signal and a dip toward the left of the tuning meter pointer.

(f) Turn function switch to "COMP-ADF." and tune in a station. Observe the indicator reading. Switch to "LOOP" and operate the "LOOP L-R" switch until the indicator pointer is 175 degrees clockwise from the station bearing position. Switch back to "COMP-ADF." and observe the time it takes for the indicator pointer to return to the station bearing. It should take approximately 5 seconds on a moderately strong signal. Repeat this check, rotating indicator pointer to a position 175 degrees counterclockwise from the station bearing.

(g) Repeat check in preceding paragraph on each band using stations whose bearing is known. The indicator should show the correct station bearing with respect to the aircraft heading.

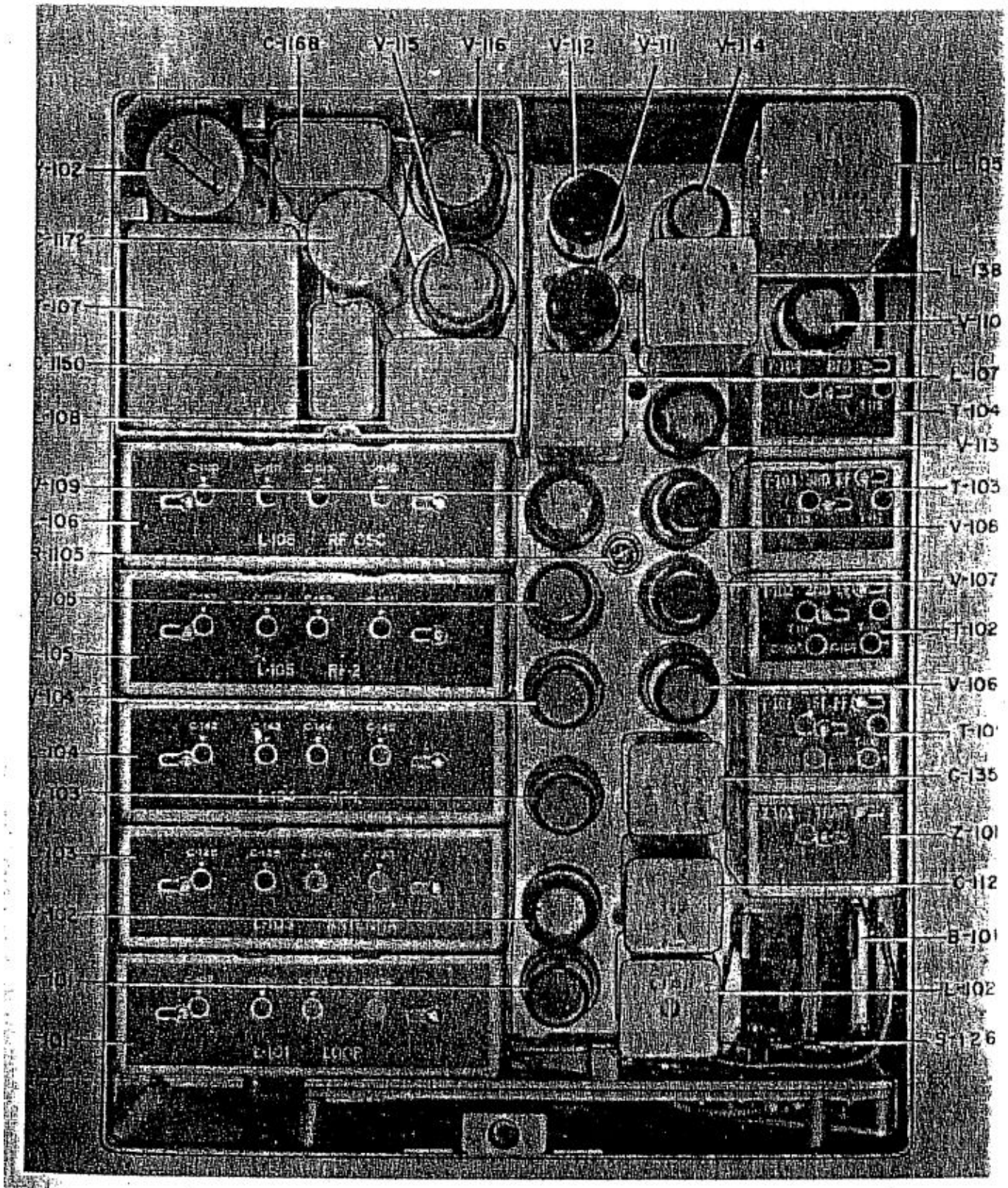

Figure 5-1. Radio Compass Unit R-101 ARN-6, Top View, Cover Removed

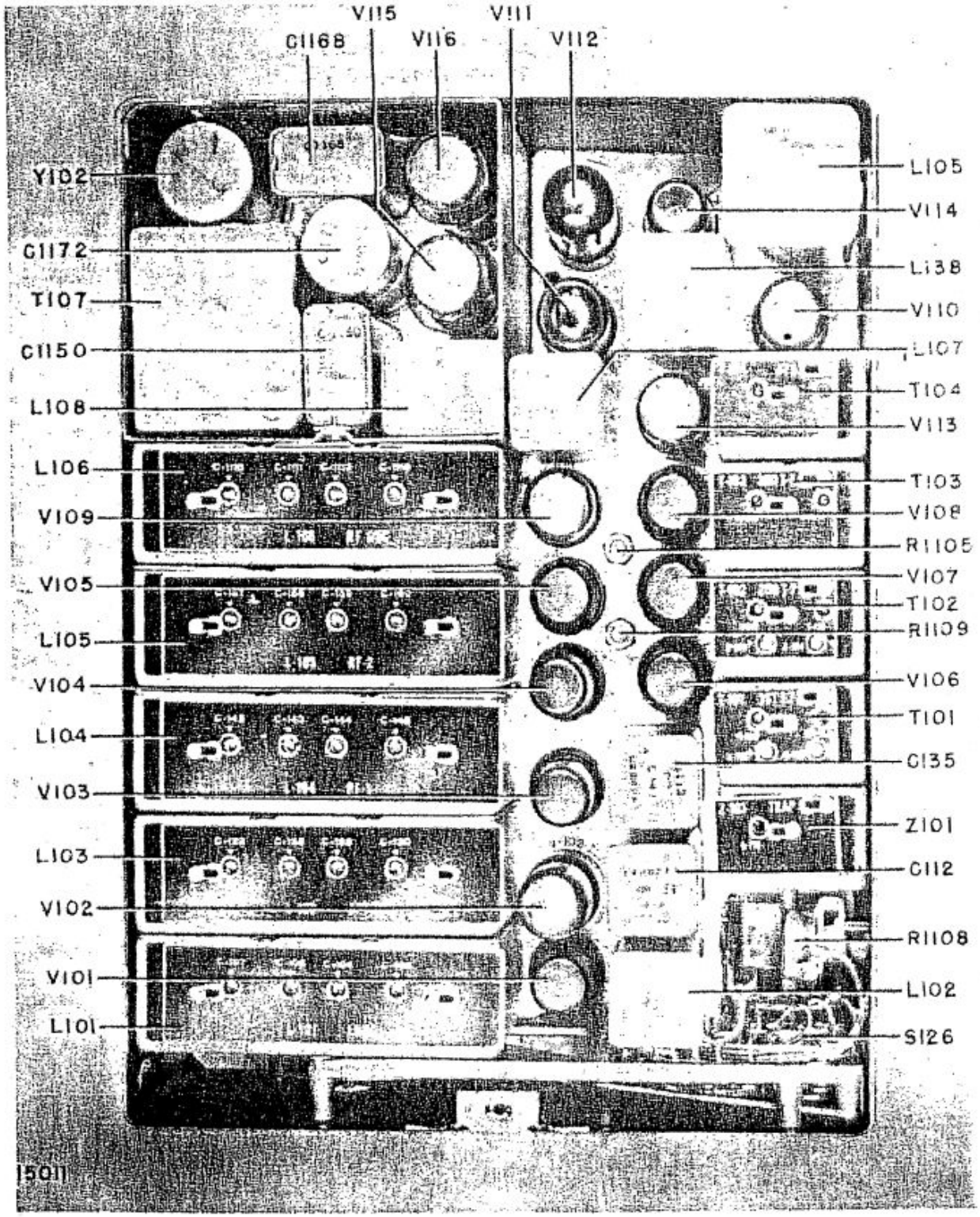

Figure 5-2. Radio Compass Unit R-101A/ARN-6, Top View, Cover Removed

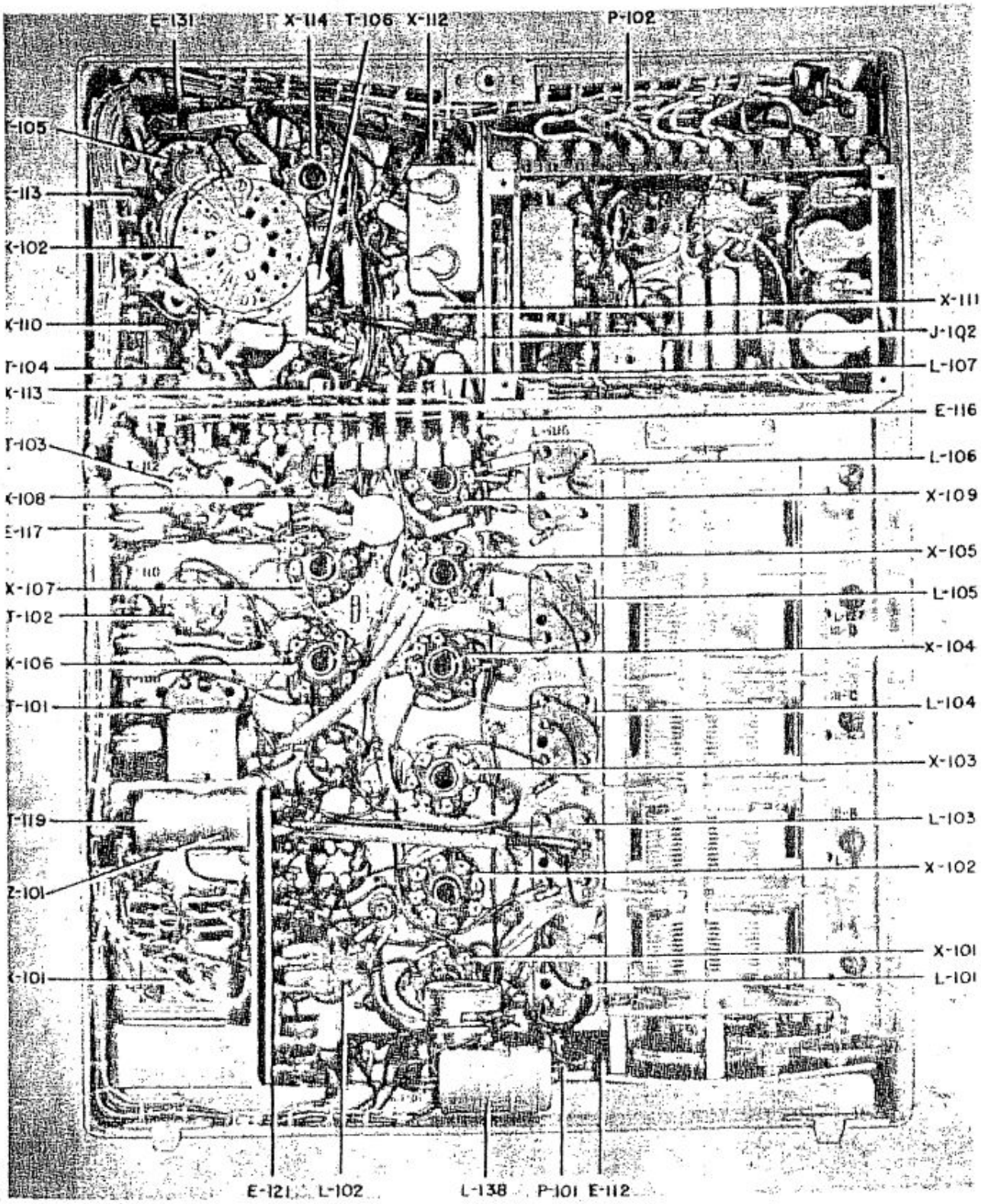

Figure 5-3. Radio Compass Unit R-101/ARN-6, Bottom View, Cover Removed

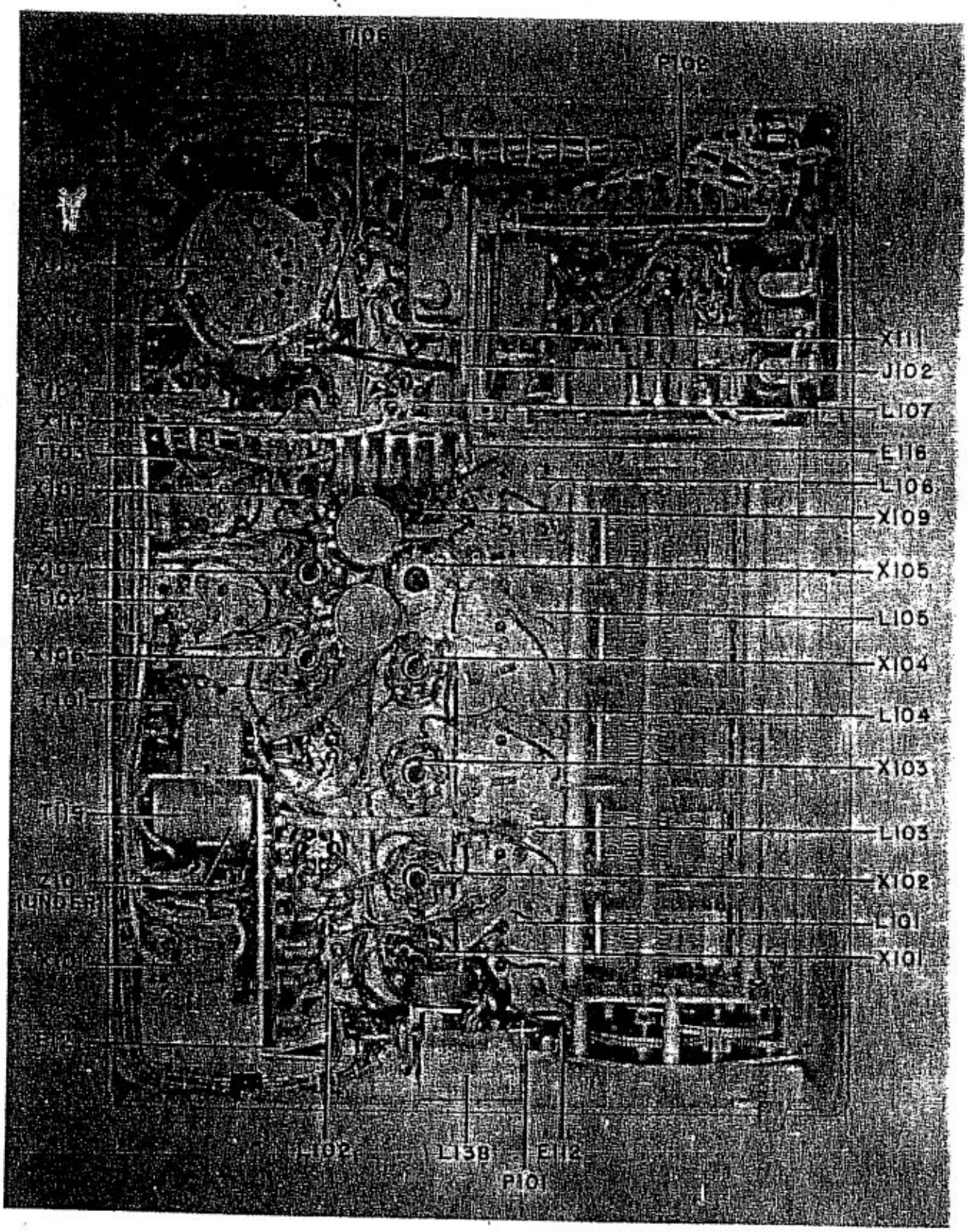

Figure 5-4. Radio Compass Unit R-101A/ARN-6, Bottom View, Cover Removed

(b) Turn function switch to "ANT." and, with the receiver tuned between stations, jar or vibrate the control box, receiver, and connecting cables and cords to check for intermittent or noisy reception.

(i) Turn function switch "OFF" and, if installation is dual control, repeat checks outlined in paragraph 1.*b*(2), preceding, using the second control box.

c. 100-HOUR INSPECTION.

(1) Repeat check outlined in paragraph 1.*b*(1) preceding.

(2) RECEIVER INSPECTION.—Detach the loop and antenna plugs, ground connection, and tuning shaft from the front of the receiver. Loosen the two knurled nuts located at the lower front corners of the receiver cabinet. Use the receiver handle and carefully pull receiver straight forward out of its mounting. Take receiver unit to a test bench.

(a) Remove top and bottom covers by loosening the fasteners and lifting the covers off the receiver.

(b) Test all tubes on a tube tester being careful to reinstall tubes in the identical sockets from which they were removed. Replace any tubes found defective.

(c) Make the necessary corrections when inspection reveals the following: loose or dirty tube and plug sockets, contacts, broken or corroded connections, damaged parts, and dirty chassis.

(d) Replace top and bottom covers and reinstall receiver unit in its mounting. Lift and hand-tighten knurled nuts until receiver is secure.

(e) Attach the antenna and loop plugs and the tuning shaft to the receiver.

(f) Check the alignment of the tuning shafts by turning the tuning crank counterclockwise until the stop is reached. Check to see that the "ALIGN" mark, which appears on the low frequency end of the 850-1750-kc band, is at the index. If not, disconnect, adjust and reconnect. Hand tighten tuning shaft. Make this check on both control boxes if installation is dual control.

(3) CONTROL BOXES.—Loosen the four captive screws and carefully remove the control box from its mounting. For removal of Control Panel C-758 A turn the six spiral cam fastener studs to free the panel from the cam fastener receptacle strips. Make the necessary corrections when inspection reveals the following: binding tuning drives or controls, loose or broken plugs, broken or corroded connections, and burnt out lamps. Make certain a serviceable spare lamp is installed in the spare lamp holder. (Control Panel C-758 A has no spare lamp holder.)

(3A) CONTROL PANEL C-1514 A—Loosen the four Dzus fasteners in the corners of the control panel. If corrections necessitate the removal of the back cover, remove the MRE-34S-G receptacle and MC-136-A coupling and then loosen the two Dzus fasteners on the rear of the control panel. The back cover may then be pulled away from the panel, thereby exposing the components of the panel for inspection.

(4) INDICATORS.—Carefully inspect the indicators for security of mounting; remove the AN connector and check for broken wires and corroded connections. After corrections are made, if necessary, reconnect plug on unit having moisture indicators, check the moisture indicator dot, which is located on the hub of the pointer; it should be dark blue. Light blue or pink indicates the presence of moisture, resulting from a leak. The indicator unit must be replaced if this check reveals presence of moisture. Repeat the above checks for any additional indicators used in the installation.

(5) LOOP.—Remove the loop housing, if used, by removing the 12 screws from around the base of the housing and lift off. Clean all grease and dirt off the loop, both inside and outside of the plane. Inspect the sockets for corrosions, and clean if necessary. Inspect loop housing for cracks and replace if damaged. Inspect fit of loop mounting and tighten if loose on units having moisture indicators; check the color of the moisture indicator in the top of the dome. A dark blue color indicates dryness, the correct condition. A light blue or pink color indicates there is a leak in the assembly. Replacement of the entire loop probably will be necessary. Reinstall the loop housing with care.

d. GENERAL INSPECTION.—Remove Radio Compass Unit R-101( ) ARN-6, Control Box C-1490( ) ARN-6 CONTROL PANELS C-403A A, C-758 A, or C-1514 A and Indicators ID-92( ) ARN-6 (Navigator's), ID-90( ) ARN-6 (Pilot's), ID-91( ) ARN-6 (Pilot's night fighters) or ID-231( ) ARN-6 from the aircraft.

(1) INSPECTION APPLICABLE TO ALL COMPONENTS.

(a) Inspect all subassemblies in components for security and possible damage. Tighten all nuts, bolts, and screws, if found to be loose. Do not tighten or loosen glyptalled screws or nuts unless they are loose or appear to have been disturbed. If they are loose, remove screws or nuts, apply glyptal No. 1276, replace and tighten.

(b) Remove all loose solder, dirt, and metallic chips.

(c) Clean components thoroughly, both inside and out, and touch up scratched paint.

(d) Remove all traces of corrosion, paying special attention to plug connectors and moving contacts.

(e) Inspect all wiring and soldered joints. If two or more strands are broken at a soldered joint, cut off lead and resolder.

(2) RADIO COMPASS UNIT R-101 ARN-6 OR R-101A ARN-6. *(See figures 5-1, 5-2, 5-3, 5-4, 5-5, and 5-6.)*

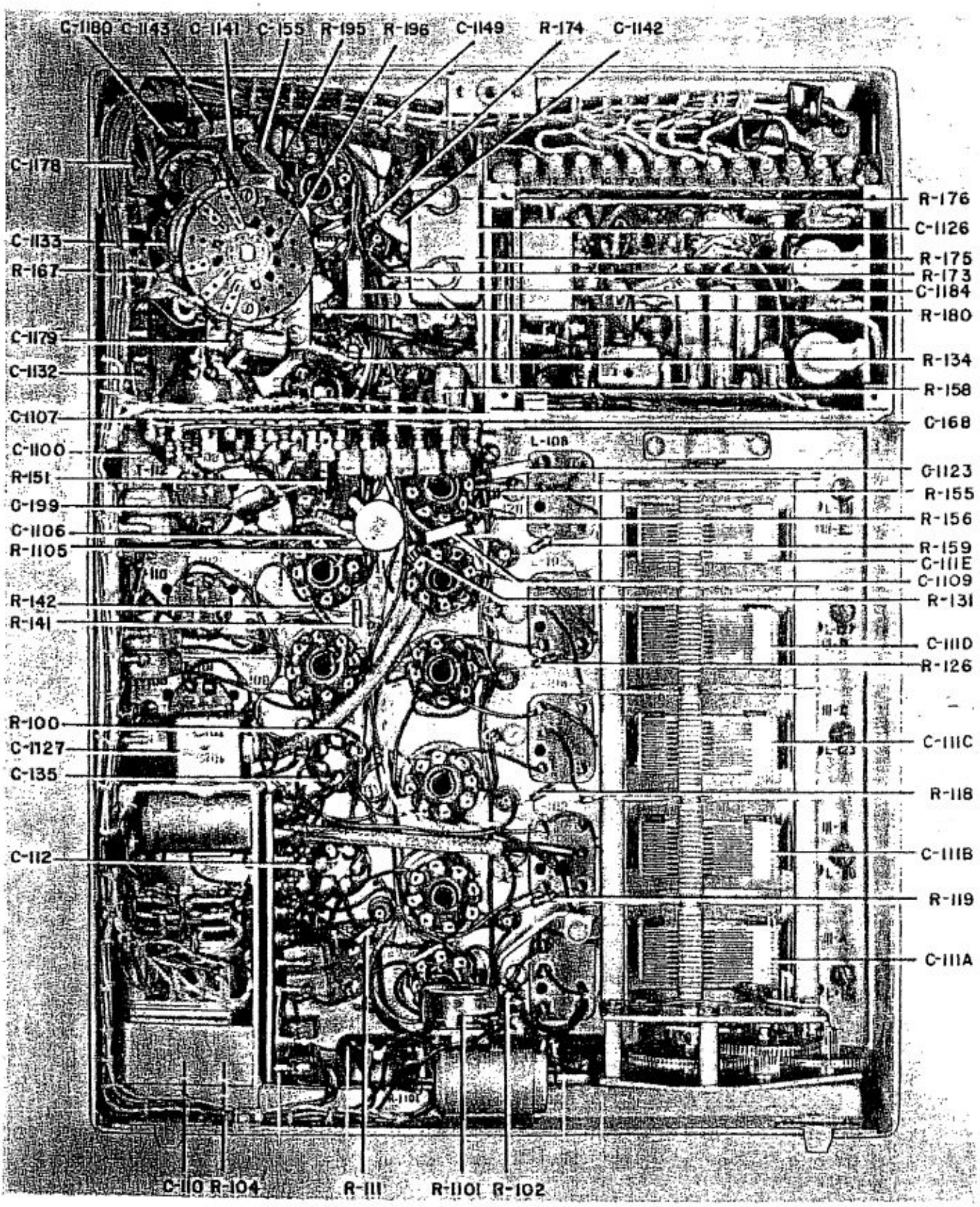

Figure 5-5. Radio Compass Unit R-101/ARN-6, Bottom View, Resistor and Capacitor Locations

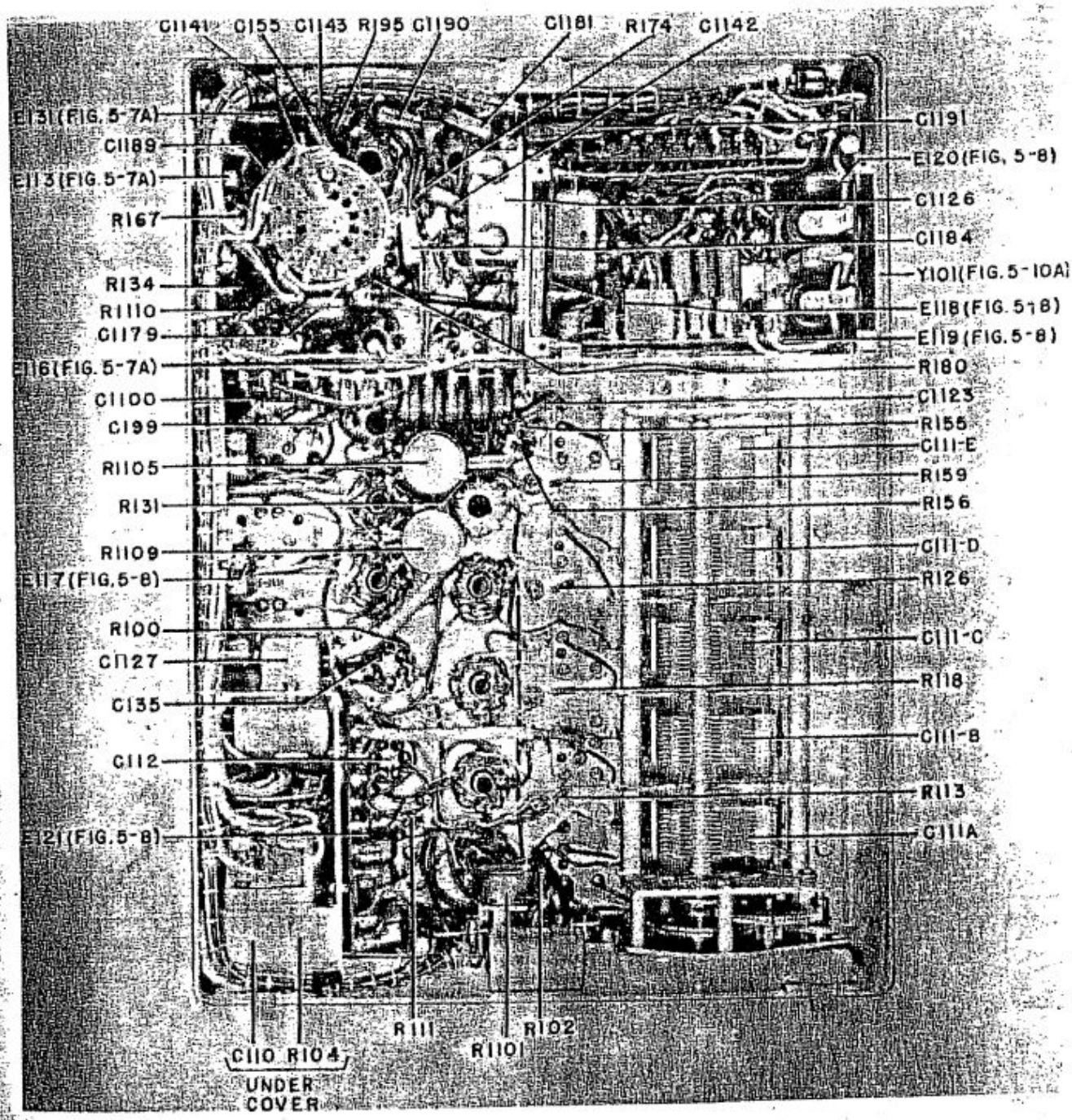

Figure 5-6. Radio Compass Unit R-101A/ARN-6, Bottom View, Resistor and Capacitor Locations

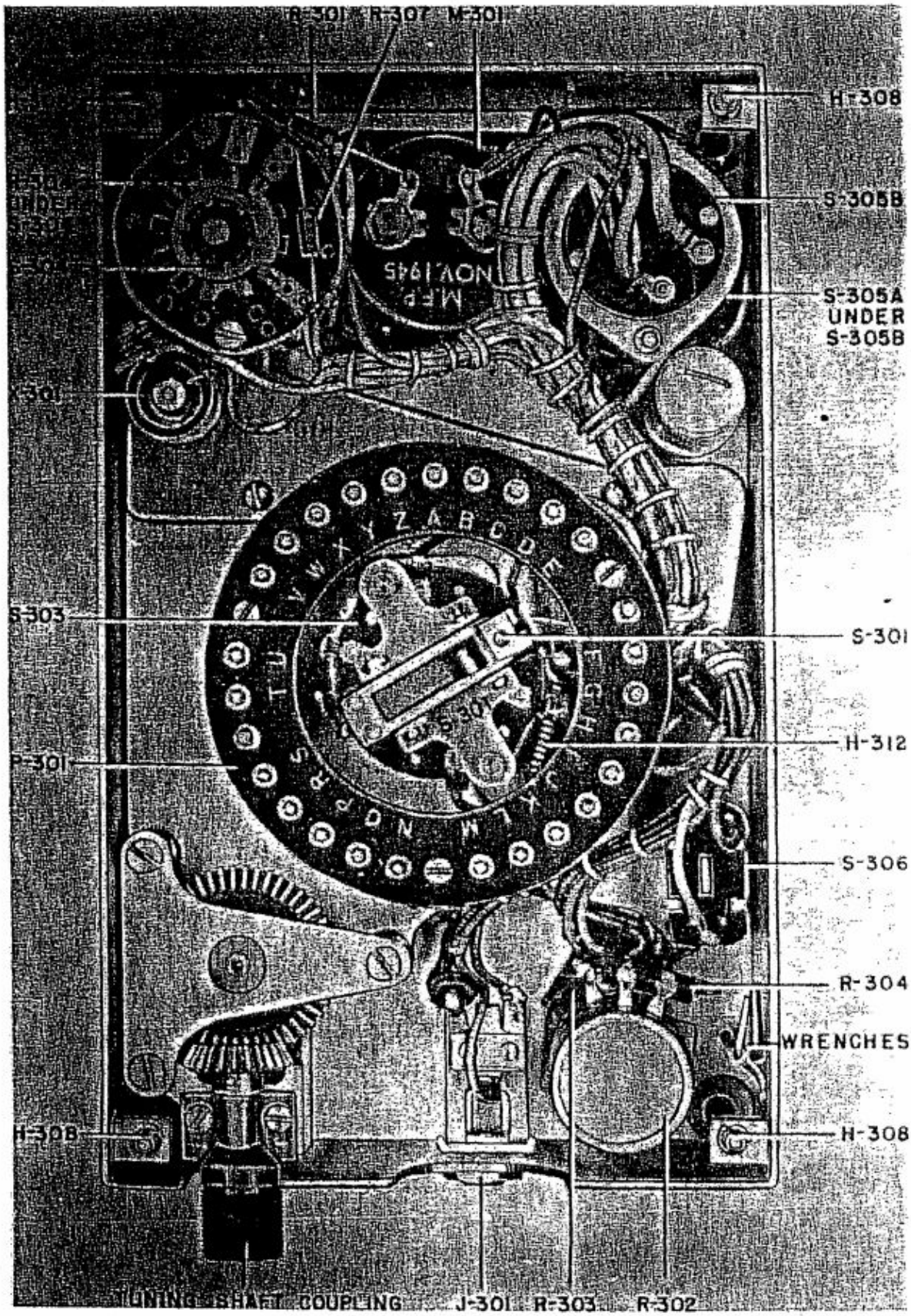

Figure 5-7. Control Box C-149/ARN-6 or C-149A/ARN-6, Rear View

Section V

AN 16-30ARN6-3 Section V

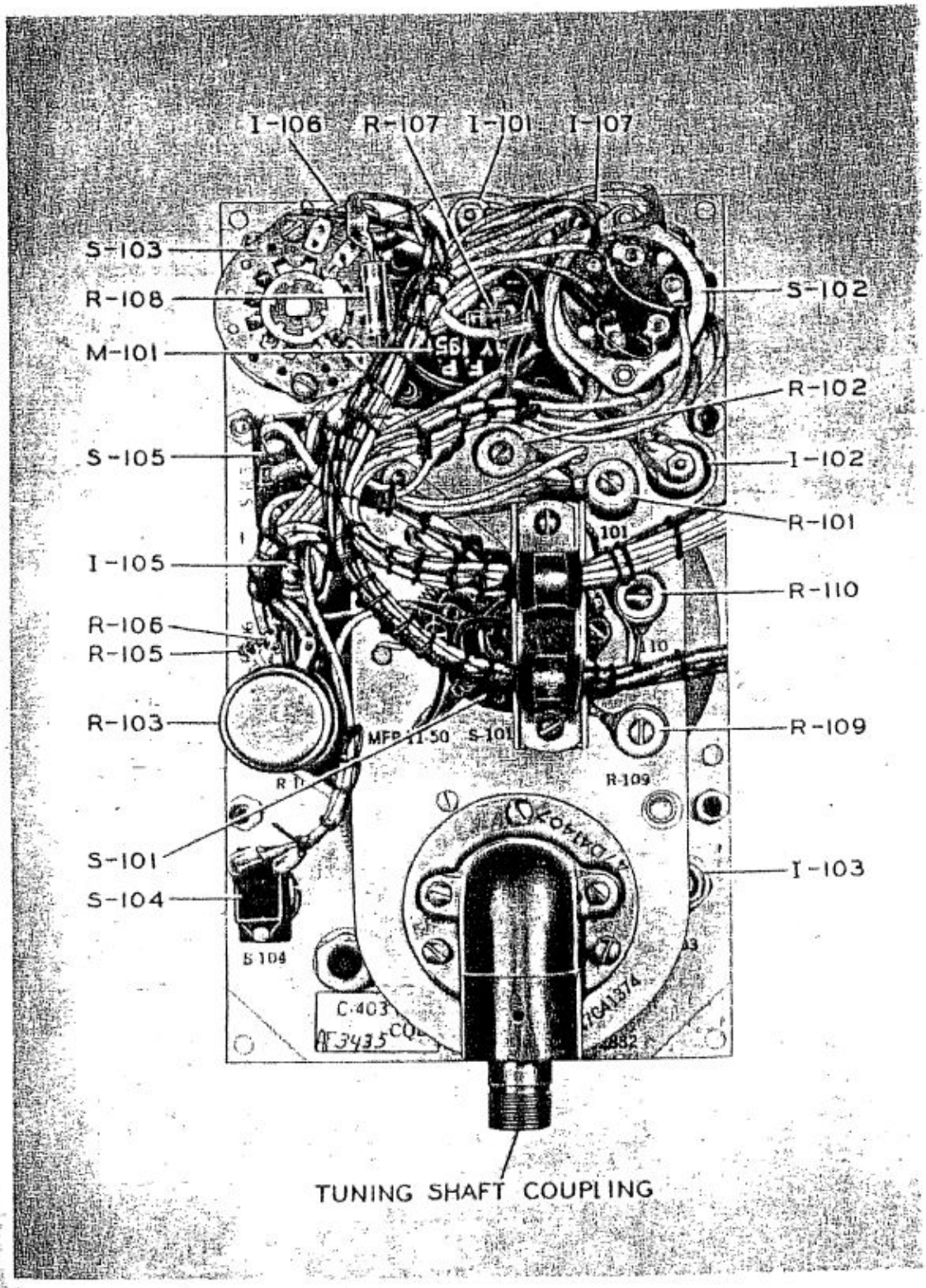

Figure 5-7A. Control Panel C-403A/A, Rear View

(a) Remove top and bottom covers and inspect unit as described in paragraph 1.*d*.(1), this section. Do not disturb wiring or alignment adjustments.

(b) Use Tube Tester I-177, or its equivalent, and check all tubes in accordance with the instructions given in the Technical Order for the test set used. Replace all tubes which show shorts or are 20 per cent below rated transconductance. Loop control tubes, V-115 and V-116, when tested on Test Set I-180, or equivalent, should be matched as to striking point. If they differ greatly in this respect, select two tubes which are matched.

(c) If Tube Tester I-177 is not available, and the tube tester in use does not provide a test for the JAN-2050 type tubes, it is recommended that they be tested in the following manner: With the heaters connected to 6.3 volts, apply 250 volts rms through 3000-ohms resistance to the plate. Connect the screen grid to the cathode. Connect the control grid to a variable DC bias supply through a 100,000-ohm resistor. Conduction should occur between −3.3 and −2.1 volts grid bias.

(d) Check the tuning capacitor drive gear train. Remove all dirt and old grease. Lubricate tuning shaft coupling and gears as specified in the Lubrication Chart, figure 5-38.

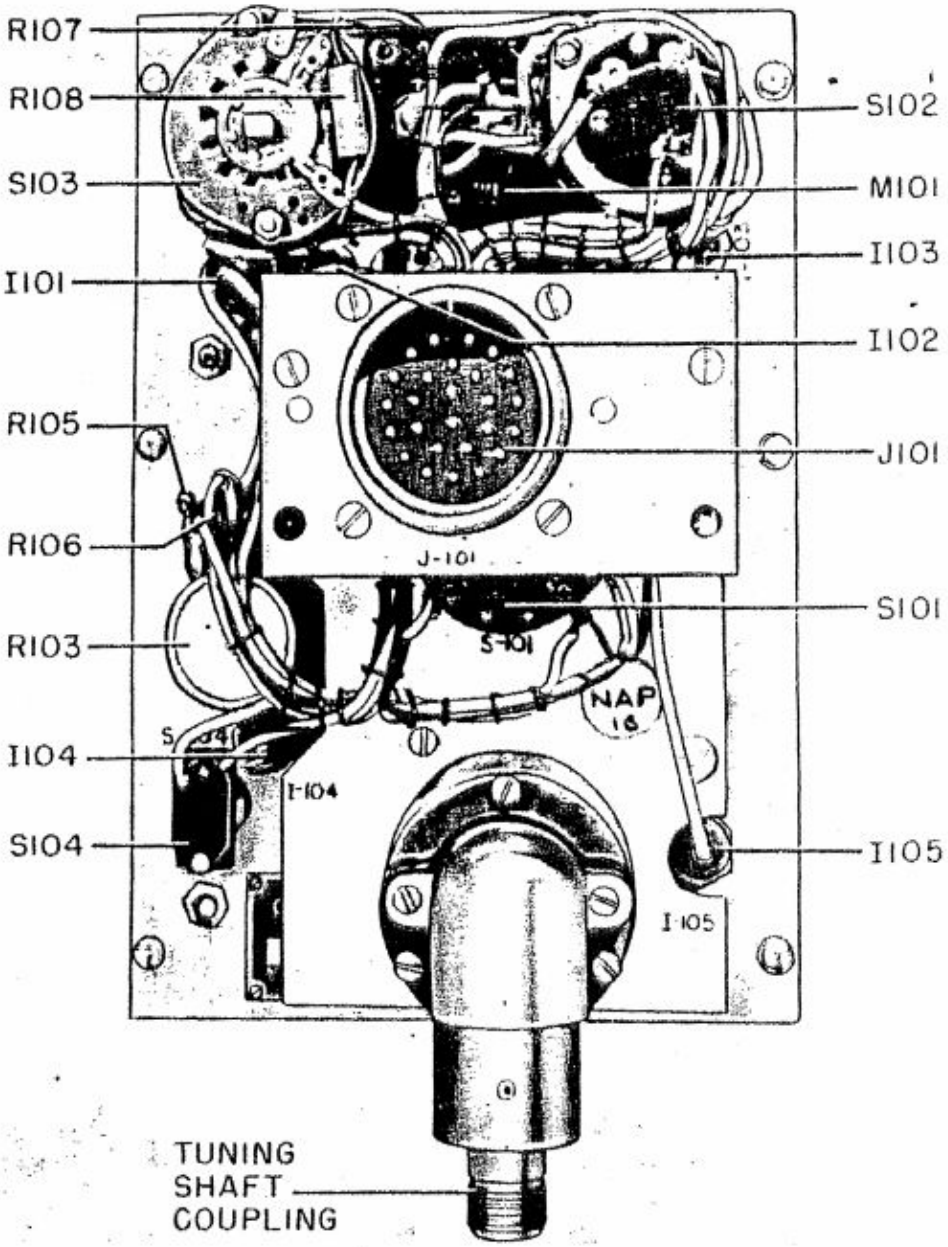

Figure 5-7B. Control Panel C-758/A, Rear View

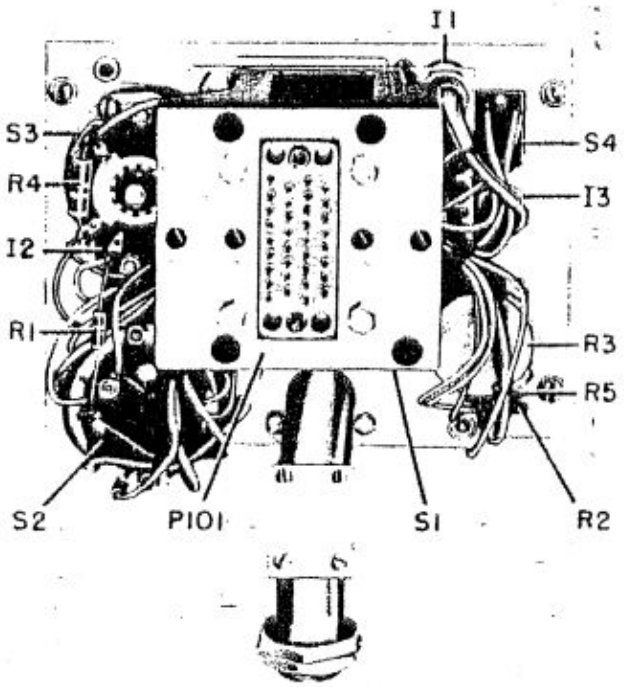

MC-136-A
TUNING SHAFT COUPLING

Figure 5-7C. Control Panel C-1514/A, Rear View

(e) Inspect tuning capacitor C-111 for possible damage of plates. If there is dirt between plates, remove with a pipe cleaner. Do not bend plates and do not blow dirt out with air hose as the line may contain water, and high pressure may bend the plates.

(3) CONTROL BOXES C-149/ARN-6 OR C-149A/ARN-6 OR CONTROL PANELS C-403A/A, C-758/A or C-1514/A. *(See figures 1-1A, 1-1B, 1-6, 4-21, 5-7, 5-7A and 5-7B.).*

(a) Inspect the dial drive mechanism. Clean and lubricate as instructed in the Lubrication Chart, figure 5-38.

(b) Inspect the phone jack J-301 and connector plug P-301 for damage or corrosion.

(c) Visually check the operation of the "CONTROL" switch S-301, or the "CONT." position of the function switch S-102.

(d) Inspect the action of the "LOOP L-R" switch S-103 or S-304. Be sure R-108 or R-307 is shorted out of the circuit by S-103 or S-304 when the "LOOP L-R" switch is in neutral position. Operate the L-R Control and check to see that it returns to the center (open) position when released.

(e) Visually inspect the tuning meter M-101 or M-301 for damage.

(4) INDICATORS.—ID-90( )/ARN-6, ID-91( )/ARN-6, ID-92( )/ARN-6 and ID-231( )/ARN-6. *(See figures 1-9, 1-10, and 1-11.)*

(a) Visually inspect the indicator for damage and proper operation of the "VAR" knob. The "VAR" knob should rotate the azimuth scale without binding, but with sufficient friction to prevent it from vibrating away from a set position.

(b) Rotate the loop at slow speed and see that the indicator pointer follows the loop position smoothly without sticking or jerking. Take into consideration possible variations resulting from compensator correction.

(c) On indicators having moisture indicators, inspect the moisture indicator located on the center of the indicator pointer. The color should be dark blue. If the color of the moisture indicator has changed to light blue or pink, the unit has developed a leak and replacement of the entire indicator probably will be necessary.

(5) LOOP AS-313/ARN-6, AS-313A/ARN-6, AND AS-313B/ARN-6. *(See figures 1-8, 2-1, and 2-2.)*

(a) Remove the loop housing if used. Clean all grease and dirt off the loop, both inside and outside the plane. Inspect connector plugs for corrosion and possible damage.

(b) Inspect the loop mounting for damage and tighten the mounting screws if loose.

(c) On loops having moisture indicators, check the color of the moisture indicator in the top of the glass dome. A dark blue color indicates dryness. A light blue or pink color indicates there is a leak and replacement of the entire loop probably will be necessary.

(6) MOUNTING MT-273( )/ARN-6 AND MT-274( )/ARN-6. *(See figures 1-4 and 1-5.)*—Remove cover plate and inspect wiring and components. Check connector J-501 and control relay K-501 for corrosion and remove all dirt and dust. Tighten all binding post nuts on the junction board.

(7) COUPLING UNIT CU-65/ARN-6 AND CU-65A/ARN-6. *(See figures 1-12 and 2-3.)*—Remove the housing and check the antenna connection to make certain it is secure. Tighten the mounting screws if they are loose.

2. TROUBLE-SHOOTING INSTALLED EQUIPMENT.

a. To locate cause of unsatisfactory operation of the equipment when installed in the aircraft much time may be saved if a step-by-step procedure is followed as outlined in the Trouble-Shooting Chart. (See figure 5-1 or 5-2.)

b. Before removing the equipment from the aircraft make the following checks:

(1) With the equipment turned off, check the fuse and replace if burned out.

(2) Remove the receiver from its mounting and check the DC supply at the junction board. Terminal 31 is +26.5 volts and terminal 30 is ground. If this voltage is correct, proceed as follows:

(3) Turn on the equipment at the control box and check the DC voltage from terminal 49 to ground. This voltage reading should be the same as the reading at terminal 31. If the equipment is dual control, repeat the above checks with each control box. When making the above checks, if no voltage is present or the fuse burns out, check for a possible open or grounded DC supply circuit in the control boxes or interconnecting cables. If the voltage at terminal 49 is correct, proceed as follows:

(4) Turn off the equipment. Replace the receiver in its mounting and secure with the thumb nuts. See that all cables are connected and that the control boxes are secured in their mountings. Turn on the equipment. If the fuse burns out, the fault may be traced to the receiver.

(5) When trouble has been traced to one unit, substitute an identical unit known to be in working order and recheck the equipment for proper operation.

(6) Make sure that the nondirectional antenna and lead-in are not grounded or open.

c. If equipment works satisfactorily as a compass but receiver output is low or absent, make the following checks:

(1) If compass receiver output is fed through the aircraft's interphone system, try plugging headphones directly into the compass control box and check receiver output with the "AUDIO" control fully clockwise.

(2) If equipment is dual control check output at each control box as one may be damaged.

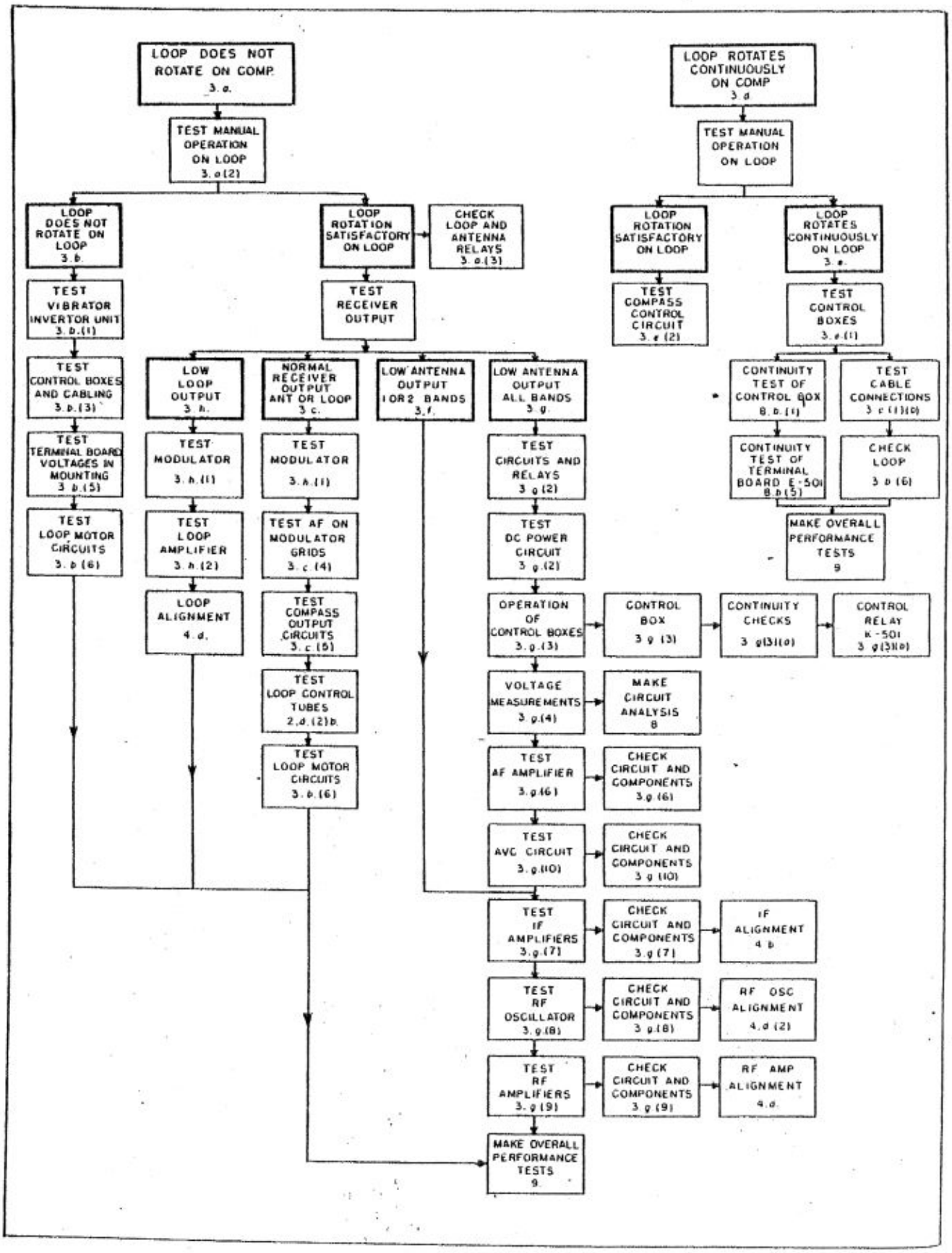

Figure 5-8. Trouble Shooting Chart

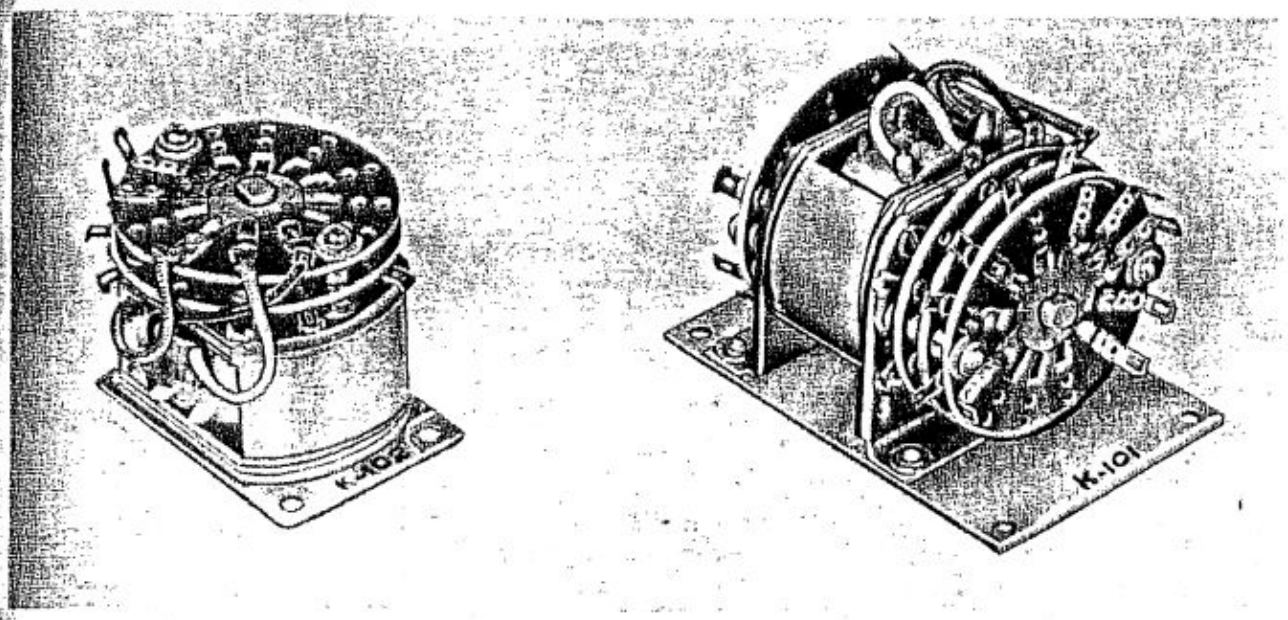

Figure 5-9. Loop and Antenna Relays K-101 and K-102

3. TROUBLE-SHOOTING AT REPAIR STATION.

Note

The following test procedure is based on the use of a satisfactory set of tubes. Carefully check all tubes and replace any tube not having characteristics within standard limits. See paragraph 1.*d*(2)*(b)*, this section. For lists of test equipment used with Radio Compass AN/ARN-6 see paragraph 10 of this section.

a. LOOP DOES NOT ROTATE ON "COMP-ADF."

(1) Operate Radio Compass AN/ARN-6 with function switch in "ANT." position. Tune in stations of known power on each band and note whether reception is normal. If trouble is experienced on only one or two bands, proceed as outlined in paragraph 3.*f.*, this section. If unsatisfactory operation is obtained on all bands, proceed as outlined in paragraph 3.*g.*, this section. If "ANT." operation is satisfactory, proceed as follows.

(2) Operate Radio Compass AN/ARN-6 with the function switch in "LOOP" position. Check loop rotation with the "LOOP L-R" switch. If loop rotation is unsatisfactory, proceed as outlined in paragraph 3.*b.*, this section. Should loop rotation be satisfactory in "LOOP," and receiver output normal in both "LOOP" and "ANT.," the difficulty may be in the compass and loop control circuits.

(3) Check for correct operation of antenna relay K-102 and loop relay K-101. (See figure 5-9.) With the function switch in "ANT." position, antenna relay K-102 should be energized and loop relay K-101 should remain in its unenergized position. Switch to "LOOP" and note the loop relay K-102, which is now energized, and antenna relay K-102, which becomes de-energized. In "COMP-ADF." operation both relays should remain unenergized. If either relay does not operate normally, as described above, make continuity checks of circuits controlling the relays. Check for proper operation of S-305A in the control box. Should the loop and antenna relays operate correctly, proceed as follows. (Refer to table 4-1, corresponding components, if symbol numbers corresponding to the control panels are desired.)

(4) With a .25-microfarad capacitor temporarily bridge the following two points: the junction point of R-150, R-181, and C-1102, located on terminal board E-116 (figure 5-10 or 5-11), and either terminal lug of capacitor C-117 or C-118, both of which are located on terminal board E-121 (figure 5-12). The result of this bridge should cause the loop to turn clockwise (in R-101/ARN-6) or counterclockwise (in R-101A/ARN-6) when connected to C-117 and counterclockwise (in R-101/ARN-6) or clockwise (in R-101A/ARN-6) when connected to C-118. If the above checks cause the loop to rotate satisfactorily, check the modulator input circuits. Also check the switches and transformer windings in the antenna transformer assembly L-103. Should no loop rotation result when the above capacitor bridge is applied, proceed as follows.

(5) With a vacuum tube voltmeter, check the output of the modulation transformer T-119 for 100 cycle-per-second AC modulation voltage. Check for the above voltage between ground and both terminals of C-117 and C-118 located on terminal board E-121. (See figure 5-12.) If no modulation voltage is present, check for possible shorts in modulation transformer T-119, relay K-101, and condensers C-1161, C-1160, or C-1159. Also check for possible open circuit of R-187, R-186, R-185, or connecting wires. If modulating voltage is correct, proceed as follows.

(6) Bridge a short-circuiting jumper from terminal 8 of transformer T-106 to terminal 4 on the power

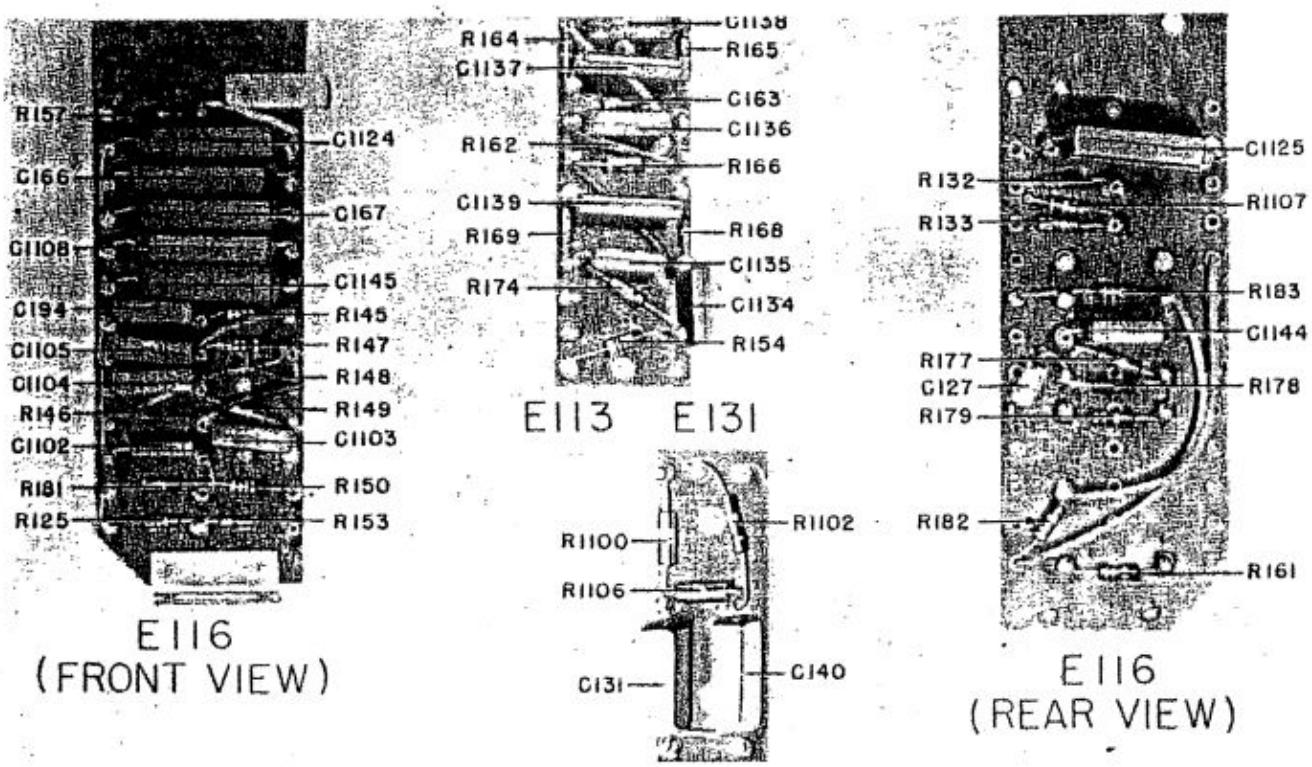

Figure 5-10. Terminal Boards Used in Radio Compass Unit R-101/ARN-6—E-113, E-116, and E-131

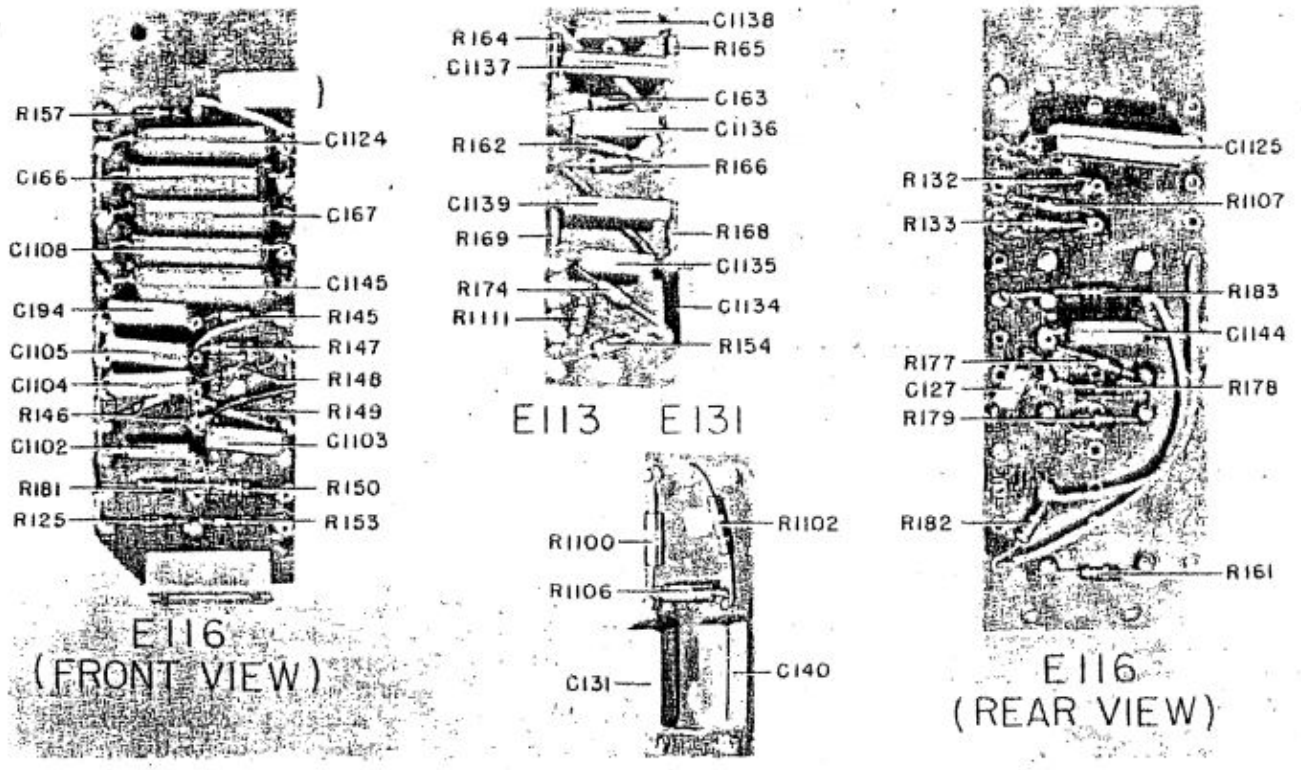

Figure 5-11. Terminal Boards Used in Radio Compass Unit R-101A/ARN-6—E-113, E-116, and E-131

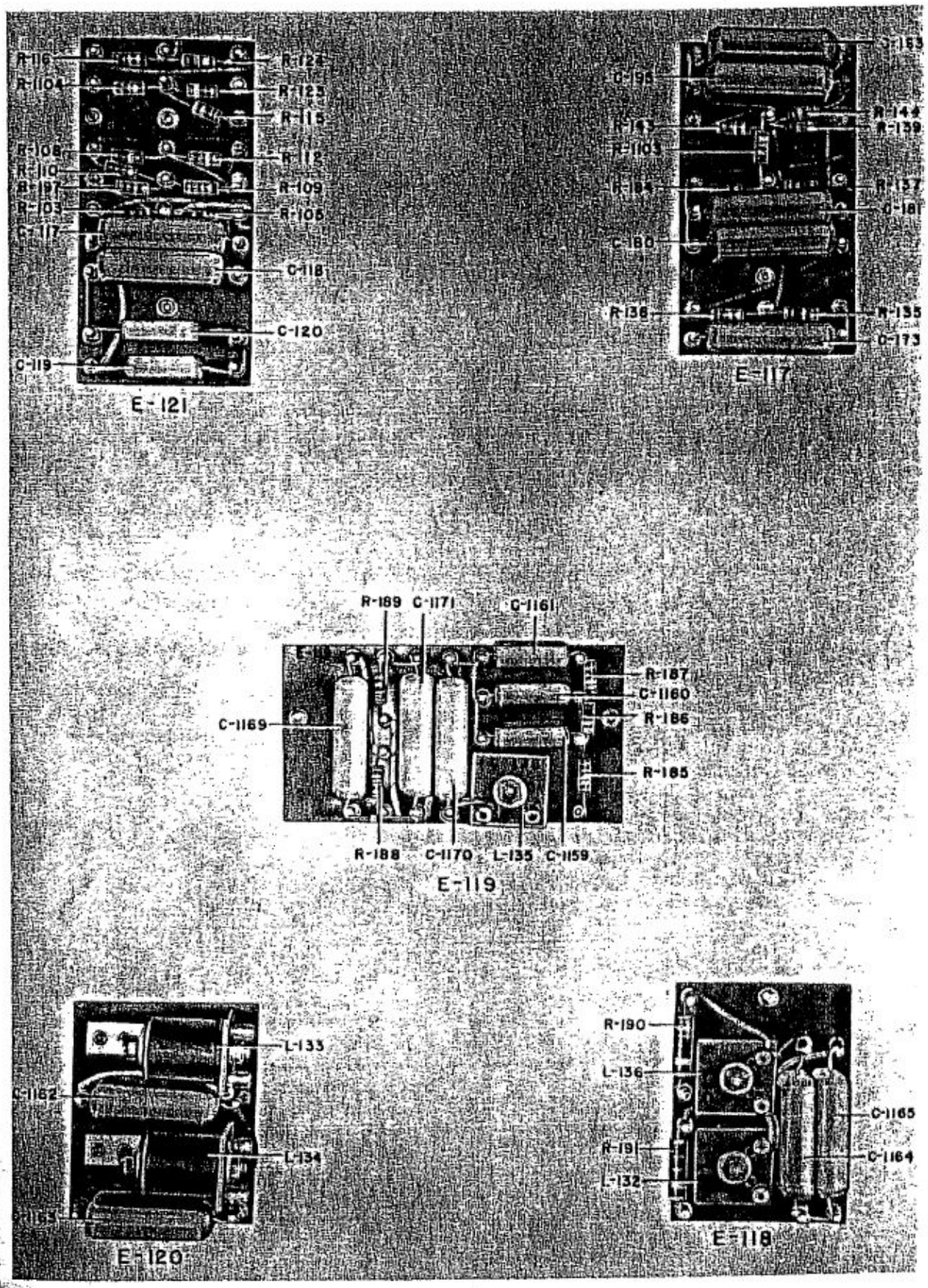

Figure 5-12. Terminal Boards—E-117, E-118, E-119, E-120, and E-121

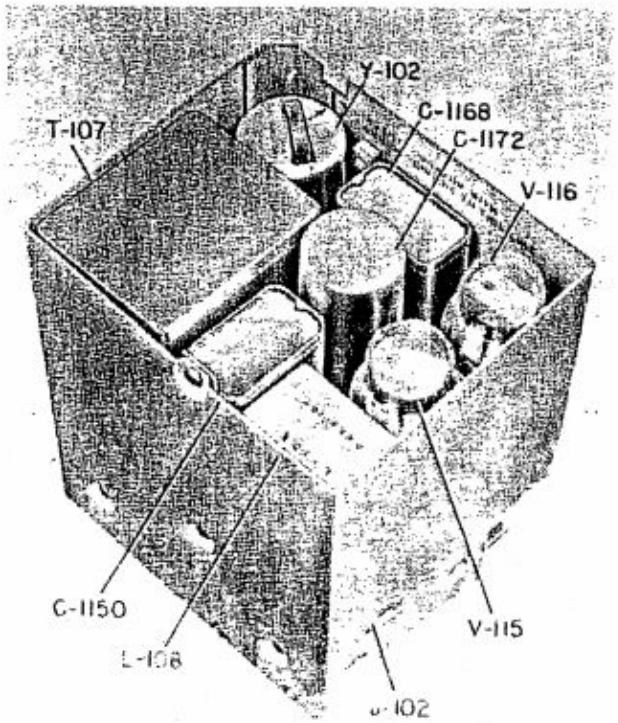

Figure 5-13. Vibrator Inverter Unit Y-101, Top View

supply terminal strip. The loop should rotate clockwise (in R-101/ARN-6) or counterclockwise (in R-101A/ARN-6. Change jumper to terminal 5 on the power supply terminal strip. The loop should rotate counterclockwise (in R-101/ARN-6) or clockwise (in R-101A/ARN-6). If the loop does not rotate when the above check is made, turn off the equipment and make an ohmmeter check between pin 8 of V-115 and ground. The resistance should be approximately 47 ohms. If incorrect check R-194 and relay contacts on K-101. Also check components in the plate circuit of the loop control tubes. Should loop rotation be satisfactory, proceed as follows.

(7) With the equipment turned off remove vibrator Y-102 and tube V-115. Turn the function switch to "COMP-ADF." With the audio signal generator apply a 100 cycle-per-second signal between ground and the junction point of R-150, R-181 and C-1102. With a vacuum tube voltmeter, check for the presence of the 100 cycle-per-second signal on the grid of the compass amplifier V-114 (pin 4). Continue to trace the signal on the plate of V-114 (pin 8) and the grids (pin 5) of both loop control tubes V-115 and V-116. If during the above checks, the signal is not present at one of the test points, check all components in the circuit between the point where the signal was present and the point where it disappeared.

b. LOOP DOES NOT ROTATE ON "LOOP."

(1) Operate Radio Compass AN/ARN-6 with function switch in "LOOP" position. Check for proper operation of the vibrator Y-102. (See figure 5-13.) If vibrator is operating, a buzzing sound will be heard. If vibrator is not working replace with one known to be in working order. If the replaced vibrator operates normally, check the equipment for proper operation on "LOOP" and "COMP-ADF." If replacement vibrator operates and loop does not rotate on "LOOP" with the "LOOP L-R" switch, proceed as outlined in paragraph 3.*b*(3) below. If replacement vibrator does not operate, proceed as follows.

(2) With the function switch in "LOOP" position, check for the presence of +26.5 volts DC input voltage at terminal 9 of the power supply terminal strip. If no voltage is present, check the switch contacts on relay K-102 and connecting wiring. Should the input voltage to power supply be normal check L-108 and L-132 in the vibrator power supply. (See figure 5-14 or 5-15.) Also check wiring and socket connections to the vibrator socket X-117.

(3) If vibrator is operating and loop will not rotate manually with the "LOOP L-R" switch substitute a control box known to be in working order and test operation of equipment. Should equipment fail to operate, proceed according to paragraph 3.*b*.(5) below. If the equipment operates satisfactorily, proceed as follows.

(4) Remove defective control box and check wiring, switch contacts, and components in the manual loop drive circuits.

(5) Make continuity checks through connecting cables and junction board in receiver mounting. With the function switch in "LOOP" position, make voltage checks in the receiver mounting. (See table 5-2.) When making voltage checks in the receiver mounting, it will be necessary to remove the receiver from its mounting and connect receiver to mounting by means of Special Purpose Cable CX-1021/ARN-6, designed for this use. By using this test cable it is possible to gain access to the bottom of the receiver and its mounting while the equipment is operating. Check for the 100 cycle-per-second AC voltage from terminals 38 and 39 to ground. This voltage should be approximately 90 volts AC with the "LOOP L-R" switch in neutral position. If voltage is incorrect, make continuity checks between terminals 38, 39, and 21 in the receiver mounting, to terminals B, C, and E, respectively, on the vibrator power supply terminal board. Also, check for the 100 cycle-per-second voltage from terminals B and C on the vibrator power supply terminal board to ground. The AC voltage should be approximately 90 volts. If the voltage is not present, check transformer T-107, L-135, R-189, R-188, and connecting wires. If vibrator power supply is defective, it may be replaced as a unit. [See paragraph 5.*a*.(5), this section, for replacement instructions.] If vibrator power supply voltages are correct, proceed as follows.

(6) Make continuity checks of the loop drive motor and connecting cables. For resistance readings in Loop AS-313/ARN-6, AS-313A/ARN-6, or AS-313B/ARN-6 see table 5-8. If resistance readings are incorrect, substitute a loop known to be in working order and test the equipment for proper operation.

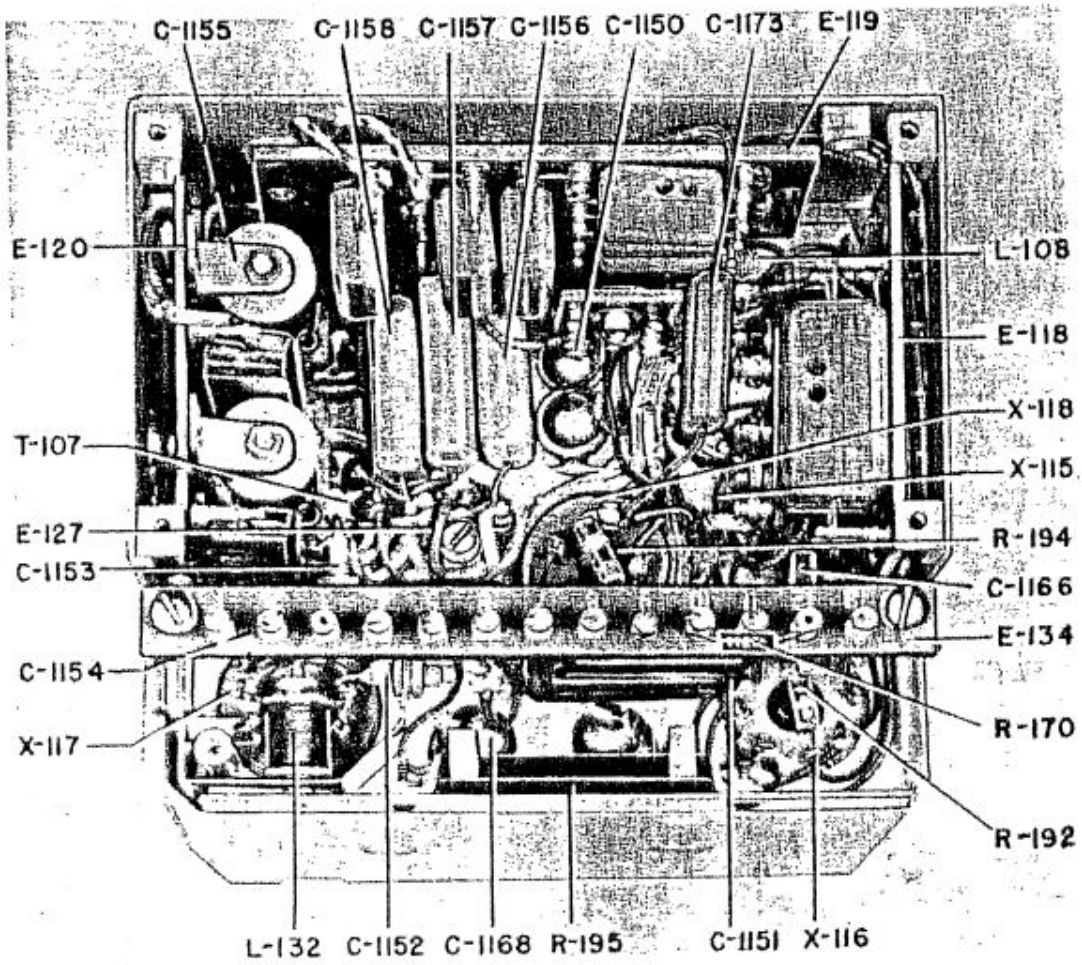

Figure 5-14. Vibrator Inverter Unit Y-101, Used in Radio Compass Unit R-101/ARN-6, Bottom View

c. LOOP ROTATES TO BEARING SLOWLY ON "COMP-ADF."—ALL BANDS.—Make checks in accordance with paragraph 3.*b.*, this section, paying special attention to circuit components in the vibrator power supply and receiver which cause proper phase shifting and filtering of the 100 cycle-per-second modulating voltage delivered to the modulator grids. The vibrator frequency and voltage output are very important and may be checked as follows:

(1) VIBRATOR FREQUENCY CHECK. — To Check the vibrator frequency, operate the equipment on "COMP-ADF." Apply an 850-kc signal, 50 microvolts or over, externally modulated 30 per cent by an accurately calibrated audio signal generator, to the antenna through a 50-micromicrofarad capacitor. Tune the compass receiver to the applied signal. Slowly vary the frequency of the modulating voltage from 90 to 110 cycles per second. Observe the action of the loop or indicators. As you approach zero beat with the vibrator frequency the loop and indicator pointers will start to oscillate. This oscillation will become slower and slower until there is a very wide back and forth swing. If it were possible to zero beat with the vibrator frequency, continuous loop rotation in one direction or the other would be the result. When loop oscillation is at minimum rate, read the frequency on the audio signal generator scale. This reading is the exact frequency of the vibrator. The vibrator frequency must be 100 cycles per second, plus or minus five cycles. A vibrator whose frequency is out of the specified limits must be replaced.

(2) VIBRATOR OUTPUT CHECK.—The condition of the vibrator contact points may be checked by using an oscilloscope. Connect the vertical (Y axis) input of an oscilloscope to pin 1 or 3 of the vibrator power transformer T-107. With the internal sweep adjusted to the vibrator frequency, observe the wave shape. A vibrator with contact points in good condition should have a square-wave voltage output similar to that shown in waveform "B", figure 5-16. As the vibrator contact points wear and become pitted, the waveshape will become ragged and peaked similar to that shown in waveform "C", figure 5-16. A vibrator in this condition should be replaced. If the vibrator output voltage is of the correct frequency and waveshape, proceed as follows.

(3) PHASE RELATION IN LOOP CONTROL TUBES.—It is very important that the phase relationship between the voltage on the grids and plates of the loop control tubes be proper. When the loop is re-

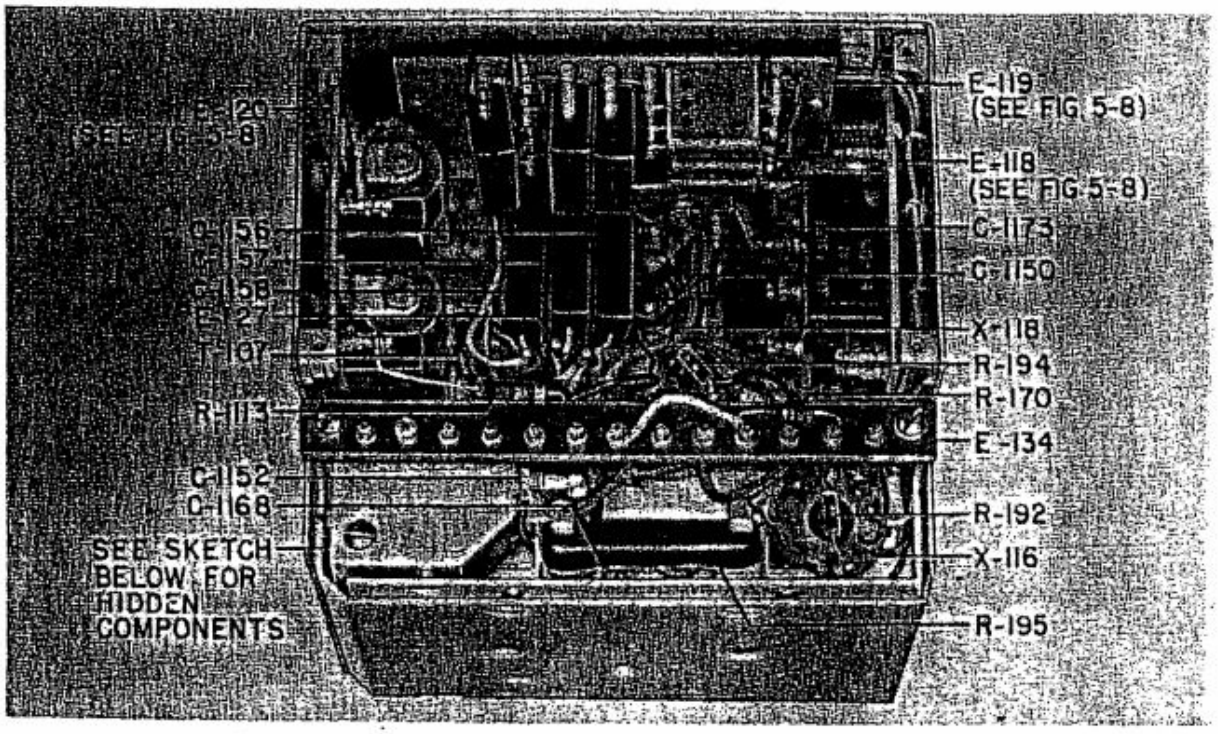

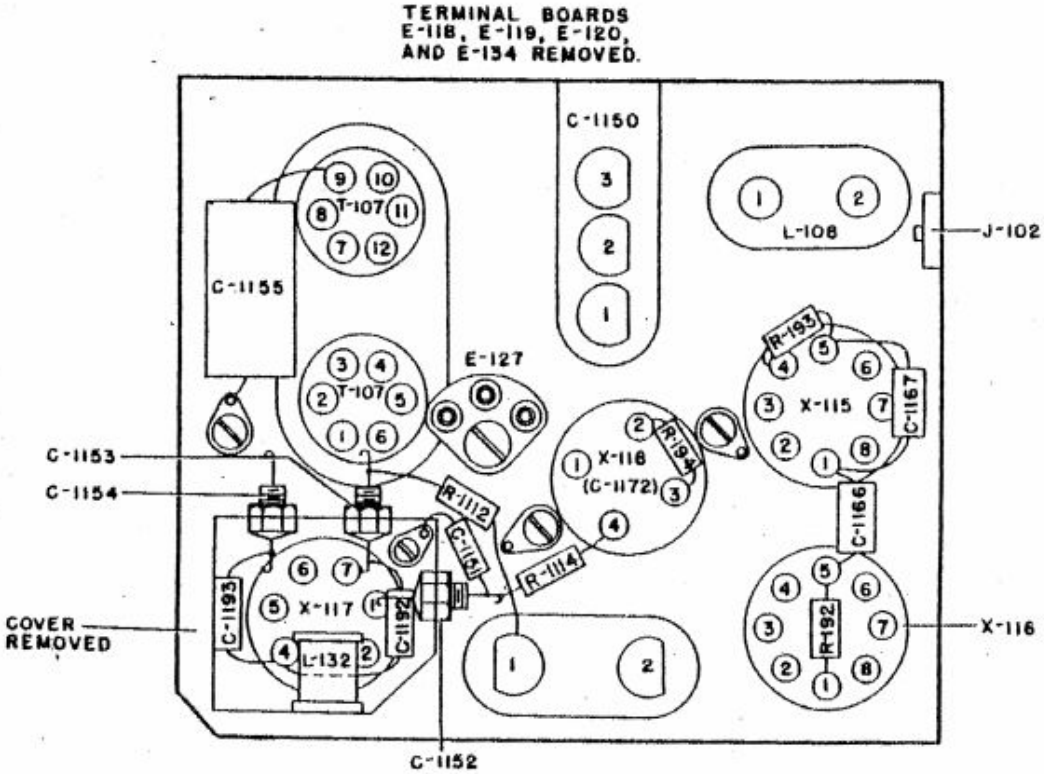

Figure 5-15. Vibrator Inverter Unit Y-101, Used in Radio Compass Unit R-101A/ARN-6, Bottom View

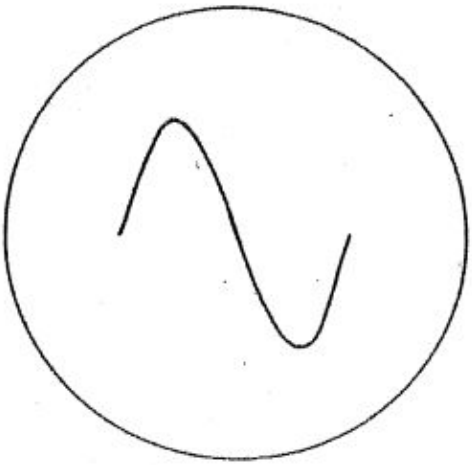

WAVEFORM A

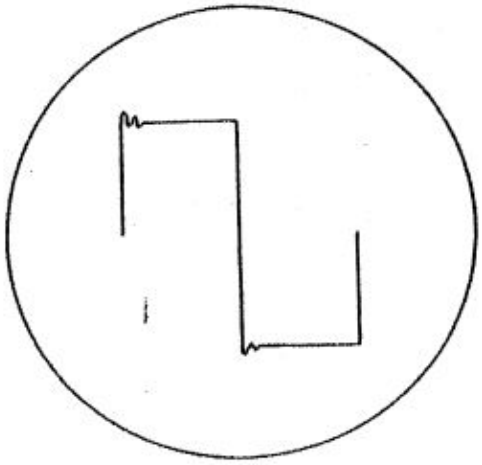

WAVEFORM B

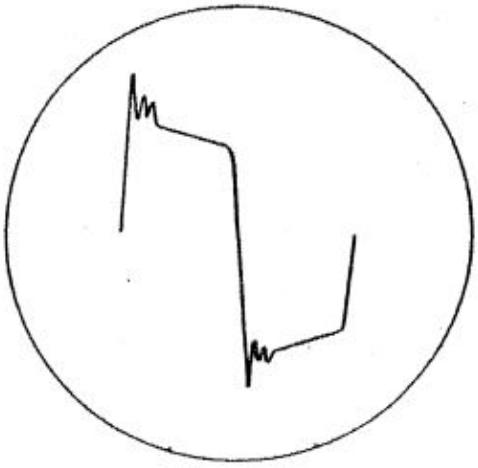

WAVEFORM C

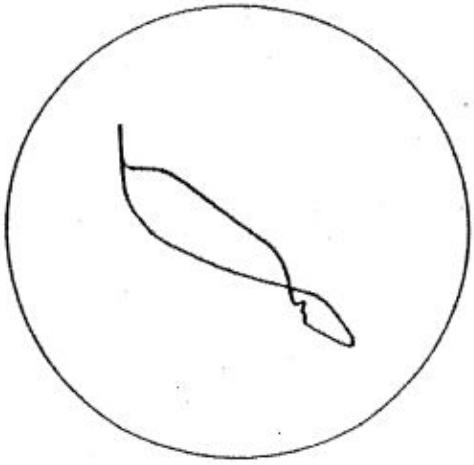

WAVEFORM D

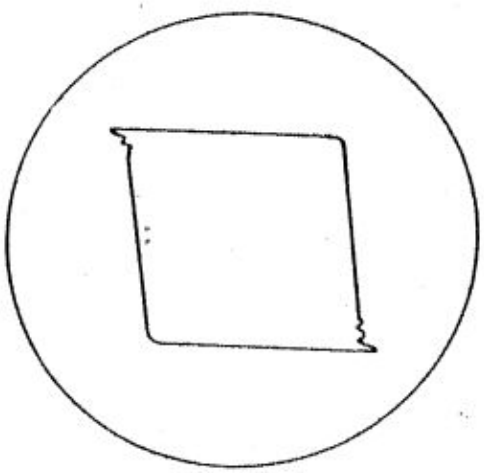

WAVEFORM E

Figure 5-16. Waveforms in Radio Compass Unit R-101/ARN-6

turning clockwise to bearing, the voltage on the grid and plate of V-115 should be in phase. This condition may be checked by applying the grid and plate voltages of V-115 to the Y and X axis of an oscilloscope, respectively. Adjust the oscilloscope amplifiers for equal deflection. With the loop returning clockwise to bearing, the waveform should be similar to that shown in waveform "D", figure 5-16. A similar waveform will be obtained with the X axis input connected to the plate of V-116 and with the loop returning counterclockwise to bearing. (Considerable variation may be expected in this waveform—the important thing is that it slopes in this direction.)

(4) PHASE SHIFTING AND FILTER NETWORK.—The output of the filter network, consisting of R-185, R-186, R-187, C-1159, C-1160, and C-1161, should result in a good sine-wave voltage with a phase shift of 90 degrees with respect to the square-wave input. To check the output waveform of the above network, apply the voltage at terminal 13 of the vibrator terminal strip to the X axis input of the oscilloscope. Use internal sweep of 100 cycles per second. The waveshape should be similar to that shown in waveform "A", figure 5-16. To check the phase shift resulting from the network, remove the internal sweep of the oscilloscope and connect the Y axis input of the oscilloscope to the input of the filter network. The input point is accessible at the junction of C-1162 and L-113 located on terminal board E-120 (see figure 5-12). The resultant waveform should be similar to that shown in waveform "E", figure 5-16.

(5) COMPASS AMPLIFIER FREQUENCY RESPONSE.—Remove the vibrator Y-102 from the vibrator power supply and operate the equipment on "COMP-ADF." Apply the output of an audio signal generator through a .25-microfarad capacitor to the grid (pin 2) of the first audio amplifier V-108. Keep the audio signal level below 0.5 volt so as not to overload the circuit. To measure the voltage output attach a vacuum tube voltmeter or oscilloscope between ground and terminal 8 of the compass transformer T-106. Vary the audio frequency input between 70 and 130 cycles per second and note the resonant peak at about 100 cycles per second. The output voltage should fall off quite sharply above 120 and below 80 cycles per second. If C-1146 or C-1147 were open, the resonant point would change and poor compass operation would result.

d. LOOP ROTATES CONTINUOUSLY ON "COMP-ADF."—Determine whether operation is normal with function switch on "LOOP." If not, see paragraph *e.* below. If operation is normal on "LOOP," check loop control tubes V-115 and V-116, capacitors C-1164 and C-1165, and associated wiring.

e. LOOP ROTATES CONTINUOUSLY ON "LOOP."—If operation is satisfactory on "COMP-ADF.", check manual "LOOP L-R" control R-306; but if loop rotates continuously on "COMP-ADF.", determine whether trouble is associated with one control position, if dual control installation. (Single control installations require all checks given for dual.)

(1) In single control installations, or dual control installations, if difficulty is associated with one control position, make the following checks:

(a) Remove the suspected control box from its mounting. Run a jumper between terminals "L" and "J" of J-302 in the control box mounting; this provides power to the receiver.

(b) If the trouble continues, check wiring between the receiver mounting and the control box mounting, particularly looking for grounds in the wires from "W" and "X" of J-302. Also check the corresponding connections in the receiver mounting.

(c) If the trouble ceases with the suspected control box removed from its mounting, check the "LOOP L-R" switch, R-306, and the wiring to it.

(2) In single control installations, or dual control installations, if difficulty is not associated with one control position, look for grounding in the plate circuit of V-115 or V-116. Before making the ground check, remove cable connector J-405 from loop connector P-701; this is necessary because the circuit to be tested is grounded through one winding of the loop drive motor B-701. The circuits to be checked include terminals 4 and 6 of T-107, R-190, R-191, L-136, L-137, R-188, R-189, C-1169, C-1170, terminals 4 and 5 of Y-101, pins B and C of P-102 and J-501, terminal 38 or 39 of E-501, and the corresponding connections on K-501.

f. LOW RECEIVER OUTPUT ON "ANT."—1 or 2 BANDS.—If satisfactory operation is obtained on one or two bands, it is unnecessary to check the operation of the audio and second detector circuits. The difficulty must be ahead of the second detector and may be traced to one IF channel or the RF amplifier circuits. Proceed as outlined in paragraph 3.*g.*(7), this section.

g. LOW RECEIVER OUTPUT ON "ANT."—ALL BANDS.

(1) GENERAL.—When both signal and noise output are low, or absent, first check all cable and cord connections for security or possible damage. If equipment output is being fed through the aircraft interphone system, plug headphones directly into the radio compass control box and check receiver output with the "AUDIO" control fully clockwise.

(2) DC POWER SUPPLY.—Check the DC input voltage on binding post 31 in the receiver mounting. This voltage should be +26.5 volts with the equipment turned on. Check the DC voltage on binding post 49. This voltage should also be +26.5 volts. If voltage is incorrect, check cabling between receiver mounting and control box for possible open circuit or high resistance connections. Also check switch contacts on relay K-501. Check the filtered DC voltage at the red terminal of capacitor C-1127. (See figure 5-5 or 5-6.) The voltage should be approximately +26.5 volts. If voltage is low, check L-107B and C-1127.

(3) OPERATION OF CONTROL BOX C-149/ARN-6, C-149A/ARN-6, OR CONTROL PANEL C-403A/A, C-758/A or C-1514/A.—Check the operation of the equipment at both the pilot's and navigator's control box. If receiver output is low or absent in both positions, proceed as outlined in paragraph 3.g.(4) below. Should equipment operate satisfactorily with one control box and not the other, proceed as follows:

(a) Remove defective control box or control panel from its mounting and substitute another unit known to be in working order. If equipment operates normally, make the following checks on the defective unit. Check all wiring, components, and switch contacts for opens, shorts, or grounds. *(See figures 5-7, 5-7A, 5-7B and 5-7C).* Pay particular attention to the audio control R-103 or R-302, phone jack J-301, and function switch S-102 or S-305. If substitute control box or control panel did not correct the trouble, proceed as follows:

(b) Check the control box mounting MT-275/ARN-6 for defective wiring and corroded or damaged contacts on J-302. Check the connecting cables between the control box mounting and the receiver mounting. Check the control relay K-501 for proper operation. Check the connections to relay K-501, its wiring, and switch contacts for open or short circuits. Check all wiring in receiver mounting.

(4) VOLTAGE MEASUREMENTS.—Measure the socket voltages with the function switch in "COMP-ADF." position and compare with table 5-3 or 5-4. If any considerable variation from values given in the voltage chart is noted, check all resistors, capacitors, coils, switches, and wiring in circuits where incorrect voltage reading is noted. If all voltage measurements are satisfactory, proceed as follows:

(5) TUNING METER M-301.—Normal tuning meter action indicates that the RF and IF sections of the receiver are in proper working order, with the possible exception of the secondary of the 3rd IF transformer. With the function switch in "ANT." position, check the operation of the tuning meter M-101 or M-301. After approximately 30 seconds warm-up period the tuning meter pointer should swing to the left side of the scale. If the tuning meter pointer remains against its clockwise stop, switch to the other control position and check that tuning motor. If tuning meter operates normally from second control position, remove defective control box and proceed as outlined in paragraph 3.g.(3), this section, paying special attention to components in the tuning meter circuit. If both tuning meters are inoperative, check the socket voltages of the tuning meter amplifier tubes (V-113B or V-110B). (See table 5-3 or 5-4.) Also check cathode resistor R-134, capacitor C-1143, and wiring in the tuning meter circuit. If tuning meter action appears to be normal, apply a 10-microvolt signal, 30 per cent modulated at 400 cycles per second, to the antenna through 50-micromicrofarad capacitor. Turn the "VOLUME" control fully clockwise. The pointer should swing approximately one scale division to the right, as the receiver is tuned to resonance with the input signal. If tuning meter action is correct and there is no 400 cycle-per-second audio output to the headphones, the trouble may be in the audio output circuits. Normal tuning meter action indicates that the RF and IF sections of the receiver are in proper working order, with the possible exception of the secondary of the 3rd IF transformer.

(6) AUDIO AMPLIFIER TEST.—If trouble is suspected in the audio output circuits, make socket voltage tests for the 1st AF amplifier (V-108), audio driver (V-110) and audio output tubes (V-111 and V-112). If any considerable variation from the typical values given in table 5-3 or 5-4 is noted, check the wiring and components associated with the tube elements in question. Apply a 400 cycle-per-second signal from an audio signal generator, through a .25-microfarad capacitor, to the grid (pin 2) of the first audio tube V-108. A signal input of .05 volt should result in an output of 50 milliwatts at the phone jack J-301. (If one of the control panels is installed, use leads from binding post 43 and 30 of the junction board located within mounting of the receiver to check audio output.) An audio signal of .27 volt applied to the grid (pin 4) of the audio driver V-110 should also result in a 50-milliwatt output. If in the above checks the output of the audio circuits falls well below the normal output

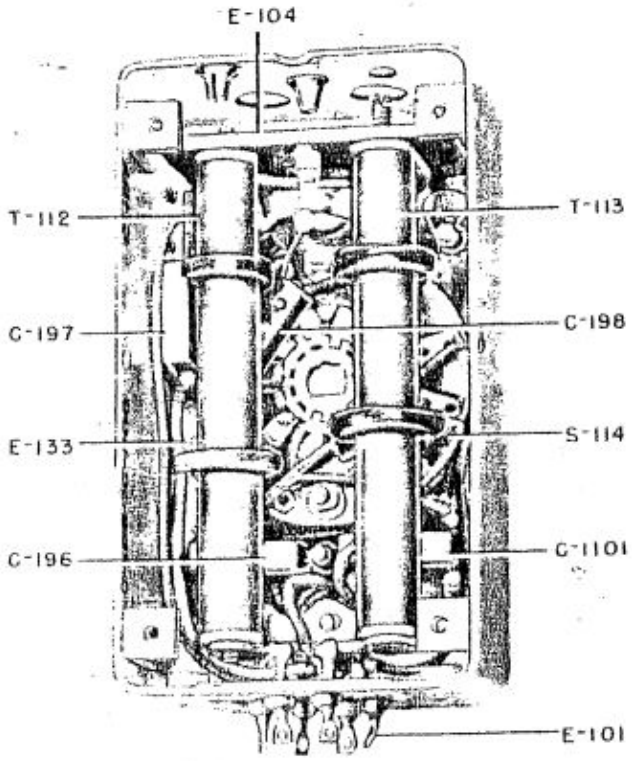

Figure 5-17. Third IF Transformer Assembly T-103, Cover Removed

(7) IF AMPLIFIER TESTS.

(a) THIRD IF AMPLIFIER. *(See figure 5-17.)* —Operate the equipment with the function switch in "ANT." position. Turn the "AUDIO" control fully clockwise and set the band switch to the 100-200-kc range. Connect the output of a signal generator, through a 0.1 microfarad capacitor, to the grid (pin 4) of the second IF amplifier V-107. Adjust the signal generator to 455 kc, 30 per cent modulated at 400 cycles per second. Plug a 300-ohm output meter into the control box phone Jack J-301. The signal input for a 50-milliwatt output should be approximately 47,000 microvolts if the 3rd IF is operating normally. If more than a 75,000-microvolt signal is required, slightly adjust the aligning screws for the primary and secondary of T-112 to determine whether misalignment has caused the loss of sensitivity. If satisfactory sensitivity cannot be obtained after alignment, or alignment is impossible, remove the third IF transformer from the receiver and check all components and wiring. Set the band switch to the 200-410-kc range and repeat the above procedure for the 142.5-kc IF channel. Use a signal generator frequency of 142.5-kc and check the alignment of T-113. A 34,000-microvolt signal input should result in a 50-milliwatt output.

(b) SECOND IF AMPLIFIER. *(See figure 5-18).* —When testing the 2nd IF amplifier follow the same general procedure outlined in paragraph 3.*g.*(7)*(a)* above. Connect the signal generator to the grid (pin 4) of the first IF amplifier tube V-106. The input signal required for a 50-milliwatt output for the two IF channels should be as follows: 2,200 microvolts for the 455-kc IF channel and 1,800 microvolts for the 142.5-kc IF channel. If misalignment is suspected follow alignment procedure given in paragraph 4, this section.

(c) FIRST IF AMPLIFIER. *(See figure 5-18.)*— When testing the first IF amplifier follow the general procedure outlined in paragraph 3.*g.*(7)*(a)*, preceding. Connect the signal generator to the grid (pin 8) of the first detector V-105. The signal input required for a standard 50-milliwatt output should be as follows: 390 microvolts for the 455-kc IF channel and 200 microvolts for the 142.5-kc IF channel. If poor sensitivity is noted, check the setting of the threshold sensitivity control R-1101 and R-1108. Turn R-1101 fully clockwise and check the signal input required for 50-milliwatt output with "AUDIO" control at maximum. The input signal should be somewhat less than the values given above if the first IF stage is working properly. The proper adjustment of the threshold sensitivity control is given in paragraph 3.*f.*, this section. If sensitivity is low and misalignment is suspected, follow alignment procedure given in paragraph 4.*b.*, this section.

Note

If replacement of IF transformers or components within IF circuits is required, complete realignment of all IF stages will be necessary.

(8) RF OSCILLATOR TESTS.—If the receiver is inoperative, or badly off calibration, the difficulty may be traced to the RF oscillator. If socket voltage tests fail to reveal the source of trouble, make the following tests:

(a) To make certain the RF oscillator is oscillating on all bands, use a vacuum tube voltmeter and measure the voltage on the grid (pin 4) of the RF oscillator V-109. The voltage should be approximately −2 volts with the equipment tuned to the high frequency end of each band. If the tube is not oscillating, the grid voltage will be approximately −0.3 volt. If the oscillator is normal, except for parts of one or two bands, try replacing the oscillator tube before checking components of the circuit. If the tube replacement does not correct the difficulty, remove RF oscillator transformer assembly L-106 and check all components, switch contacts, and wiring in the inoperative circuit.

(b) If the RF oscillator is functioning normally but it is impossible to calibrate the dial at the high frequency end of the band with the trimmer capacitor, check the shunt capacitor in parallel with the trimmer for possible open circuit. If low frequency dial calibration is impossible with the transformer core adjustments, check the series padding capacitors, C-1121, C-1118, C-1119, and C-1120. Also check switch contacts on S-124 and associated wiring. (See figures 5-19 and 5-19A.)

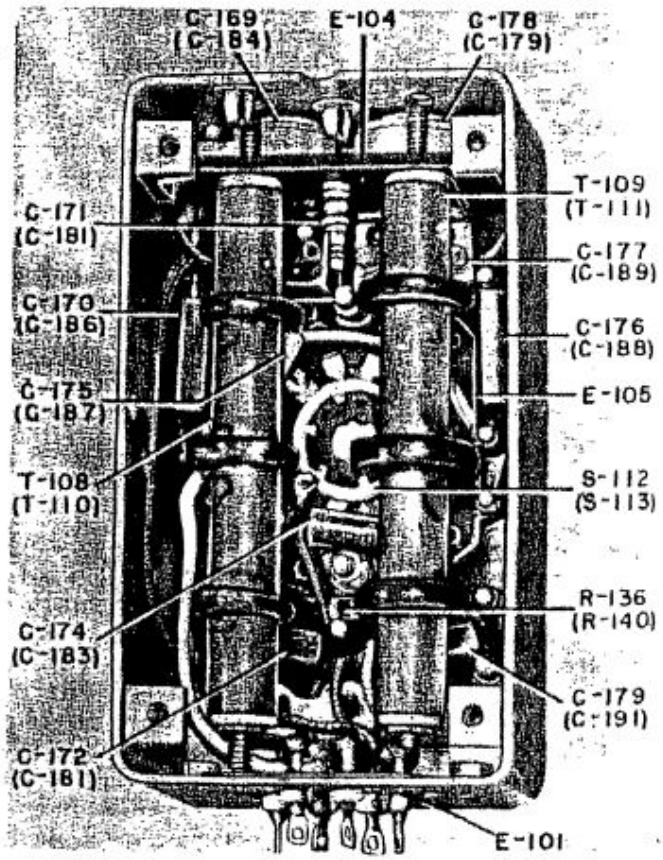

Figure 5-18. First or Second IF Transformer Assembly T-101 or T-102, Cover Removed

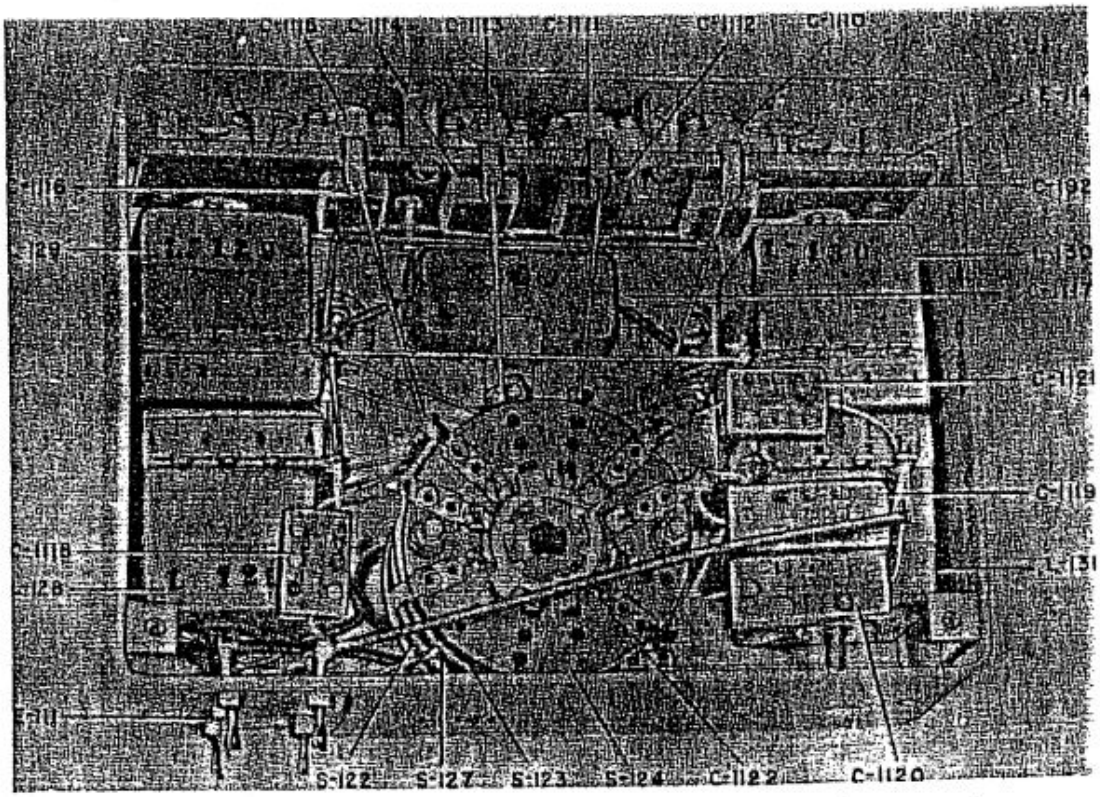

Figure 5-19. RF Oscillator Transformer Assembly L-106, Cover Removed (Radio Compass Unit R-101/ARN-6 or R-101A/ARN-6)

Note

If RF oscillator tube or circuit components are replaced it will be necessary to completely align all bands of the RF oscillator and RF amplifier circuits. For alignment procedure see paragraph 4.*d*., this section.

(9) RF AMPLIFIER TESTS.—If socket voltage tests of first and second RF amplifier tubes fail to reveal cause of trouble, make sensitivity checks of both RF amplifiers as follows:

(a) Apply an RF signal, 30 per cent modulated at 400 cycles per second, to the grid (pin 4) of the 2nd RF amplifier V-104, through a 0.1 microfarad capacitor. The frequency of the RF signal should be the same as that used for alignment at the high frequency end of each band. (See table 5-1.) The signal input for a 50-milliwatt audio output should be approximately 50 microvolts.

(b) Repeat the above check for the first RF signal into the grid (pin 4) of V-103. The signal input for a 50-milliwatt audio output should be approximately eight microvolts.

(c) In the above sensitivity tests, if the sensitivity is low, check alignment of the RF stages. Check AVC action as outlined in sub-paragraph (10) below.

(d) Should alignment be impossible or sensitivity considerably below normal, remove transformer assembly causing trouble and check all components, switch contacts, and wiring. (See figures 5-20 and 5-20A.) Carefully check capacitors C-165, C-150, and C-129. If one of these capacitors is open, the RF ground will be removed from the grid return of the associated stage and considerable loss of sensitivity will result. Should both first and second RF stages be normal, apply a 5-microvolt signal to the antenna in a manner described in paragraph 4.*d*.(4)*(a)*, this section. Reduce "AUDIO" control to give a 4:1 signal-to-noise ratio, as described in paragraph 4.*d*.(4)*(c)*, this section. The audio output should be approximately 50 milliwatts or more. If output is below normal, check relay K-101 for proper operation. Check components, switch contacts and wiring in IF trap Z-101. (See figure 5-21.) Check alignment of antenna transformer assembly L-103, following procedure outlined in alignment data, paragraph 4.*d*.(4), this section. Should the above checks fail to reveal the source of trouble, remove the antenna transformer assembly, and check all circuit components, switch contacts, and wiring. (See figures 5-22 and 5-22A.) Replacement of L-103, L-104, L-105 or any circuit components within

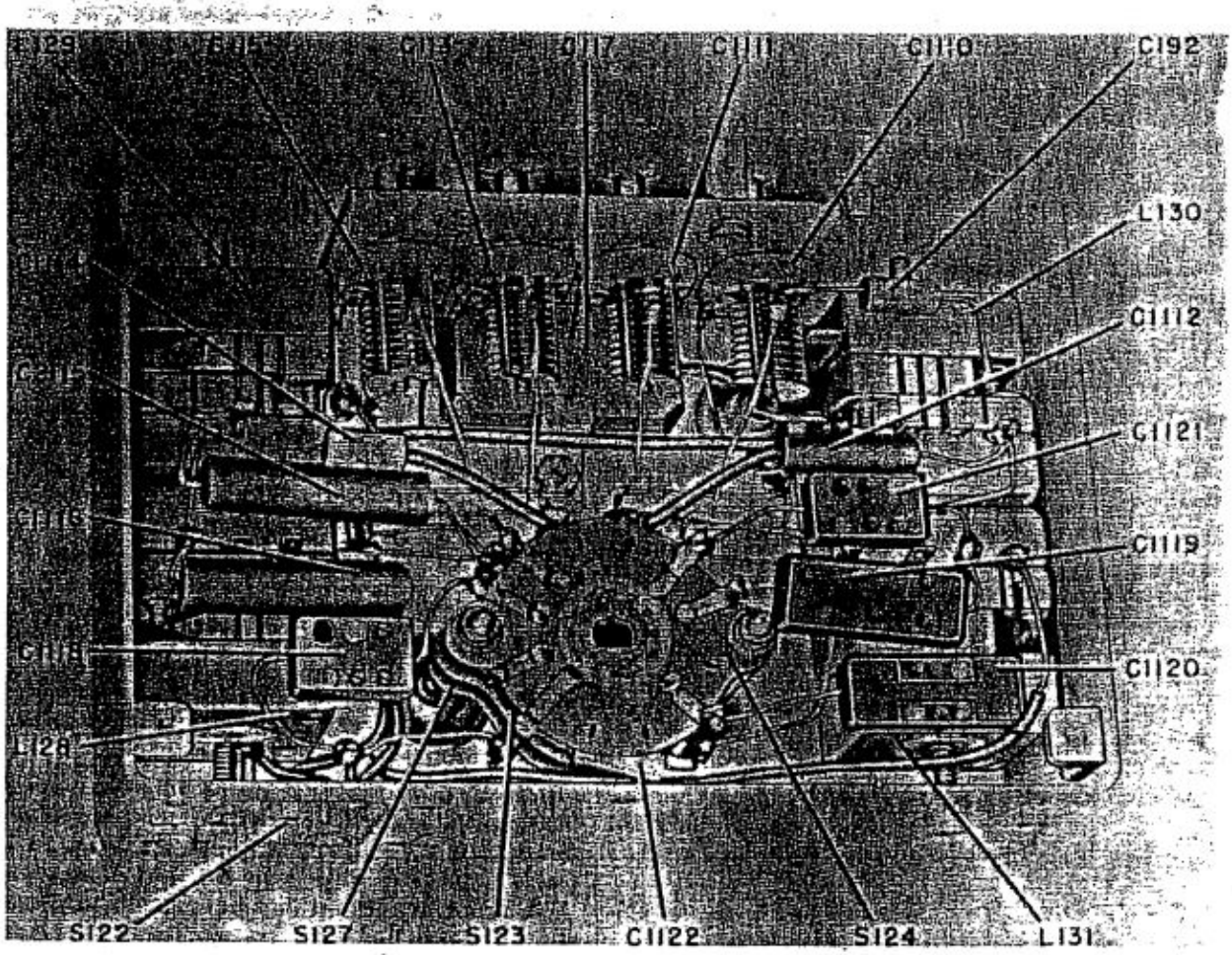

Figure 5-19A. RF Oscillator Transformer Assembly L-106, Cover Removed (Radio Compass Unit R-101B/ARN-6)

these assemblies will make complete realignment necessary.

(10) AVC CIRCUIT TESTS.—Very poor sensitivity or high distortion on strong signals may result from improper operation of AVC circuits. Normal AVC voltages measured on an average receiver and method used are as follows: feed a 220,000-microvolt 455-kc signal, 30 per cent modulated at 400 cycles per second, into the grid of the 2nd IF tube, V-107. Turn the band switch to the 100-200-kc band and set the "AUDIO" control fully clockwise. With a vacuum tube voltmeter, measure the AVC voltage at the grid (pin 4) of the 1st RF tube, V-103. This voltage reading should be approximately −3 volts DC. The audio output at the phone jack should be 490 milliwatts. Turn the band switch to the 200-410-kc band. A 255,000-microvolt 142.5-kc input should result in approximately the same AVC voltage as above with an audio output of 450 milliwatts. Following the above procedure measure the AVC voltage on the grid (pin 4) of the 2nd RF amplifier and the grid (pin 8) of the 1st detector. The voltage at either grid should be approximately −2.25 volts DC for each IF channel. If there is no AVC voltage present, check the AVC voltage at the diode (pin 4) of the 2nd detector V-108. If voltage is present, check the AVC filter networks consisting of the following resistors and capacitors: R-147, R-145, C-1105, C-194, R-149, C-1104, and C-1103. Also check the AVC load resistors, R-148 and R-146, and associated wiring. If no AVC voltage is present at the diode, check coupling capacitor C-199. Also try tube replacement. If AVC voltage is missing at one of the three controlled tubes, check the RF bypass capacitor and filter resistor in the defective circuit. Check C-129 and R-114 in the 1st RF amplifier cir-

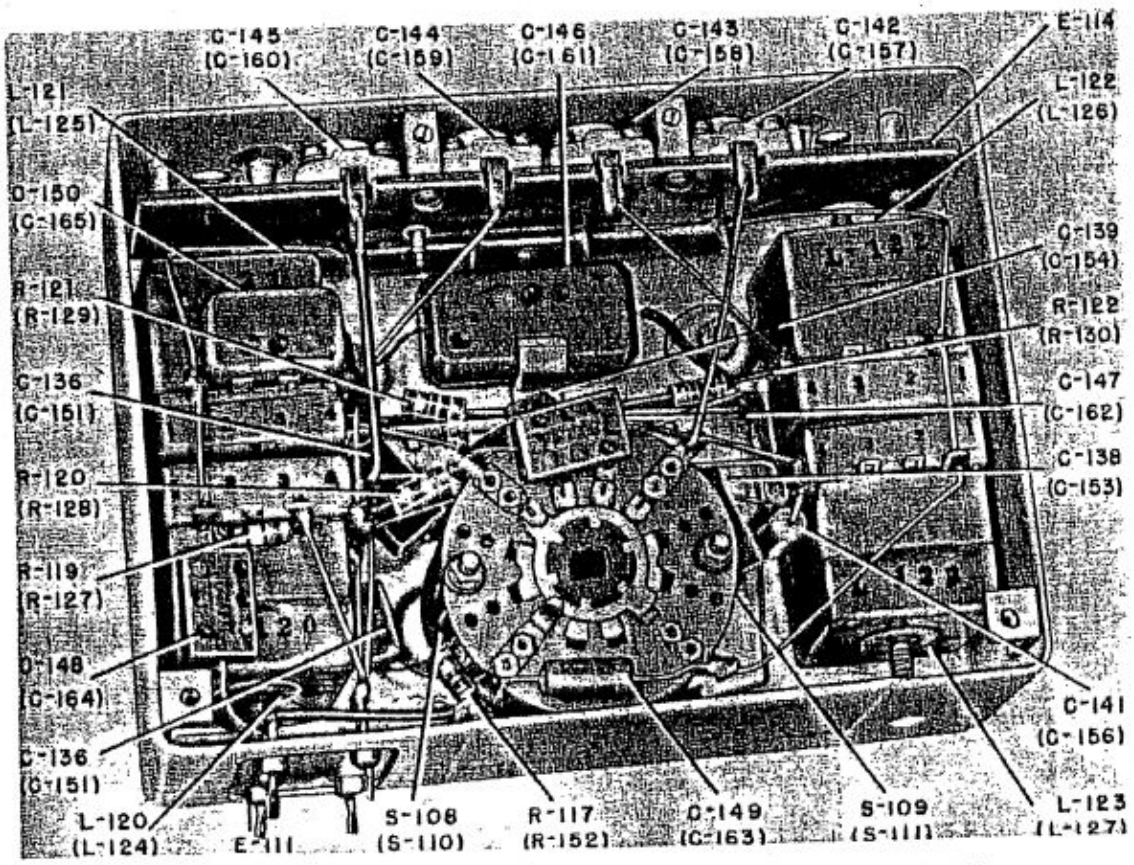

Figure 5-20. First or Second RF Transformer Assembly L-104 or L-105, Cover Removed (Radio Compass Unit R-101/ARN-6 or R-101A/ARN-6)

cuit, C-150 and R-119 in the 2nd RF amplifier circuit, and C-165 and R-127 in the 1st detector circuit.

b. LOW RECEIVER OUTPUT ON "LOOP."—Operate Radio Compass Unit R-101/ARN-6 or R-101A/ARN-6 with the function switch in "LOOP" position. Tune in stations on each band, and observe whether trouble is encountered on all bands or on one or two bands. If on all bands, proceed as outlined in paragraph 3.*g.* preceding as far as applicable. If, however, the trouble is encountered on one or two bands only, the difficulty may be in the antenna transformer assembly L-103. Measure the voltage on the plates of the modulator tube V-102 for each band switch position. If any considerable variation from the values given in table 5-3 or 5-4 is noted, check the components in the antenna transformer assembly L-103. Check switch contacts and coils for possible open or short circuits. If the foregoing tests do not reveal the trouble, proceed as follows:

(1) MODULATOR TEST.—Measure the socket voltages of the modulator tube V-102 and compare with information given in table 5-3 or 5-4. Note the change in cathode bias when the function switch is changed from "COMP-ADF." to "LOOP." The bias voltage should increase when the function switch is in "LOOP." This increase in bias tends to cut off the "B" section of the modulator, thus allowing the loop signal to pass through the antenna transformer L-103 without cancellation from the "B" section of the modulator. If the bias does not change check the loop relay K-101 for defective switch contacts. Also check the components in the cathode and grid circuits of the modulator V-102. The voltage gain from the grid of the loop amplifier V-101 to the grid of the first RF Amplifier V-103 should be between three to six times.

(2) LOOP AMPLIFIER TEST.—Measure the socket voltages of loop amplifier tube V-101 and compare with the readings in table 5-3 or 5-4. If any considerable variation from the chart values are noted, check the wiring and components for open or short circuits. If the socket voltages are correct and reception is poor on all bands, check the components of the phaser L-102. Carefully check L-114 in the phaser, figure 5-23. To check L-114 it will be necessary to remove the shield. If reception is poor on one or two bands and the above checks do not reveal the trouble, check

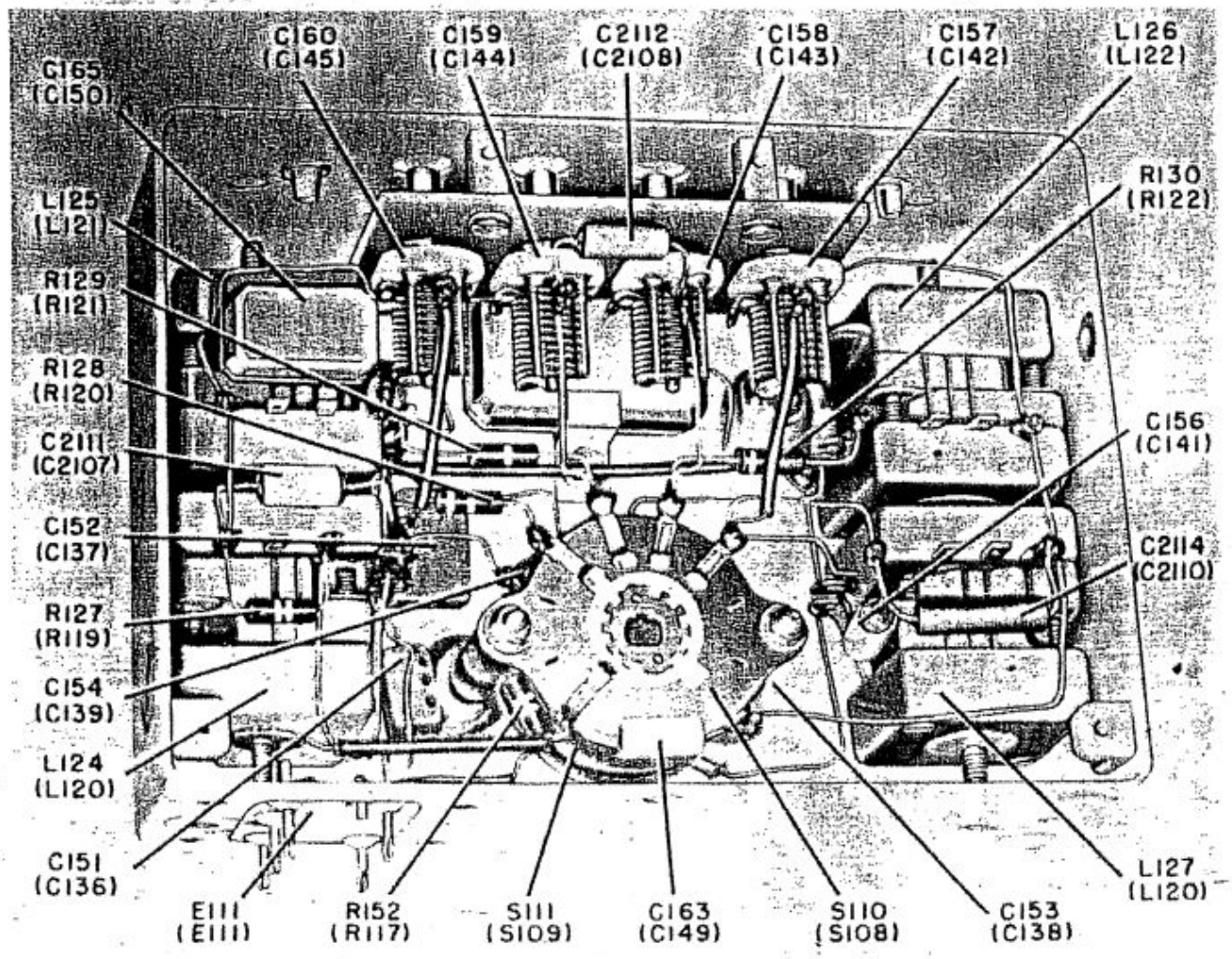

Figure 5-20A. First or Second RF Transformer Assembly L-104 or L-105, Cover Removed (Radio Compass Unit R-101B/ARN-6)

the alignment of the loop transformer trimmers in the bands at fault. If the proper alignment proves impossible, remove the loop transformer assembly L-101 and carefully check all switch contacts and other circuit components. (See figures 5-24 and 5-24A.) For alignment procedure see paragraph 4.*d.*, this section.

(3) LOOP TEST.—Make resistance measurements in the loop at plugs P-701 and P-702. Refer to resistance table 5-8. Make continuity check of Loop Cord CG-131/ARN-6, CG-132/ARN-6, CG-133/ARN-6, or CG-134/ARN-6 for possible shorts or open circuits.

(4) LOOP ALIGNMENT.—If any alterations in the setting of the loop transformer assembly trimmers, or replacement of the loop transformer assembly, were necessary, complete realignment of the loop stage will be necessary. Follow alignment procedure outlined in paragraph 4.*d.*, this section. After alignment has been completed, proceed with performance tests outlined in paragraph 9, of this section.

i. ERROR IN BEARING INDICATION.

(1) Large errors are probably caused by open or short circuits, or incorrect wiring in the loop and indicator circuits.

(2) If error in bearing appears on only one indicator, check the wiring at indicator plug J-403 for possible broken leads or poorly soldered connections. Check continuity of cable between indicator plug and terminal board in the receiver mounting. Also check indicator for open or shorted windings.

(3) Should both indicators show the same incorrect bearing, check all cables in the indicator circuits for open or short circuits. If cables are in order, check

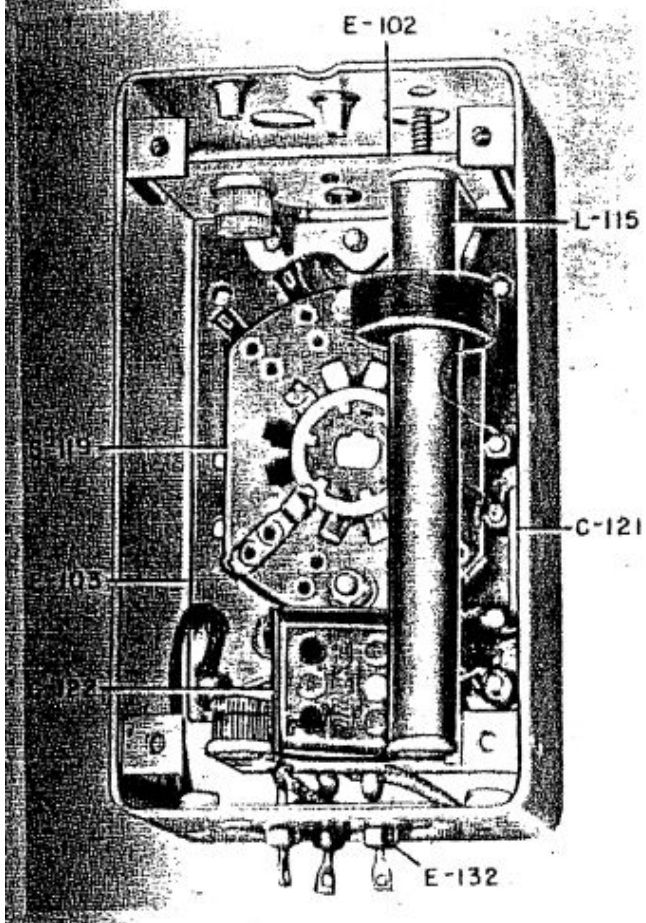

Figure 5-21. IF Trap Z-101, Cover Removed

indicator windings. Also check the autosyn transmitter windings in the loop. For resistance readings in the loop and indicators see tables 5-8 and 5-11.

(4) If the error is small, check another station on another band. If the error is on one band only, it is probably caused by misalignment of the LOOP or OSC stage of that band. Carefully realigning the LOOP, ANT, RF, and OSC stages may correct the error. This error is usually accompanied by slightly sluggish compass action.

(5) If the compass action is good but shows up to 20-degree error, check the loop compensation.

(6) Check the grounds associated with the LOOP, the loop transmission line, and receiver. Check and tighten, if necessary, the gang support screws on the front of the receiver.

(7) Make checks of paragraph 3.*e.*, this section. These faults can also cause bearing errors.

(8) In a test cage, small errors can be caused by direct radiation from the signal generator. This may be detected by moving the signal generator, plugging the AC cord into another outlet or moving its ground while watching the bearing indicator. Turning the signal generator around may also show up this error. Excessive room noise can cause the indicator to hand on one side of true bearing. This can be checked by turning off the signal generator and rotating loop on LOOP position to find null of the noise, also by operating the COMP-ADF. with no signal to take bearing on the noise.

j. EXCESSIVE HUNTING AT BEARING.—Check resistors and capacitors in the loop control feedback network. This network feeds an out-of-phase signal to the grid of the compass amplifier from pin 10 on the vibrator power supply terminal board. The feedback network consists of the following resistors and capacitors: R-170, R-1105, R-1100, R-1106, R-1102, C-131, and C-140. R-1105 is the variable feedback adjustment. The proper adjustment of this control is made at the factory and should not be changed unless a standard compass test cage is available. For proper adjustment of R-1105 see paragraph 4.*g.*, this section.

k. "CW-VOICE" SWITCH HAS NO EFFECT.—Operation of the equipment with "CW-VOICE" switch in "CW" position should result in a 900 cycle-per-second tone, or beat frequency note, as the receiver is tuned to a modulated or unmodulated station. The tone oscillator operates when the function switch is in "COMP-ADF." position while the beat-frequency oscillator operates in "ANT." or "LOOP." If "CW-VOICE" switch has no effect proceed as follows:

(1) GENERAL.—Turn function switch to "COMP-ADF." and place "CW-VOICE" switch in "CW" position. Tune in station and listen for a 900 cycle-per-second tone. If tone is not present, switch to "ANT." and listen for beat frequency tone. If neither tone nor beat-frequency oscillator operate, make the above checks with the other control box or, in case of single control installation, replace control box with one known to be in working order. If equipment operates correctly from second control position, remove defective control box and check "CW-VOICE" switch S-306 and associated wiring. Also check connecting cables and contacts on control relay K-501 in receiver mounting. If "CW" operation is not obtainable at either control box, check switch contacts on antenna relay K-102, loop relay K-101, and associated wiring.

(2) "CW" OPERATION NORMAL ON "COMP-ADF." ONLY.—With the "CW-VOICE" switch in "CW" position and function switch on "ANT." check socket voltages for beat-frequency oscillator (V-113 or V-110). If any considerable variation from voltages given in table 5-3 or 5-4 is noted, check all resistors, capacitors, switches, contacts, and wiring in circuits associated with the tube. If voltages are normal, check

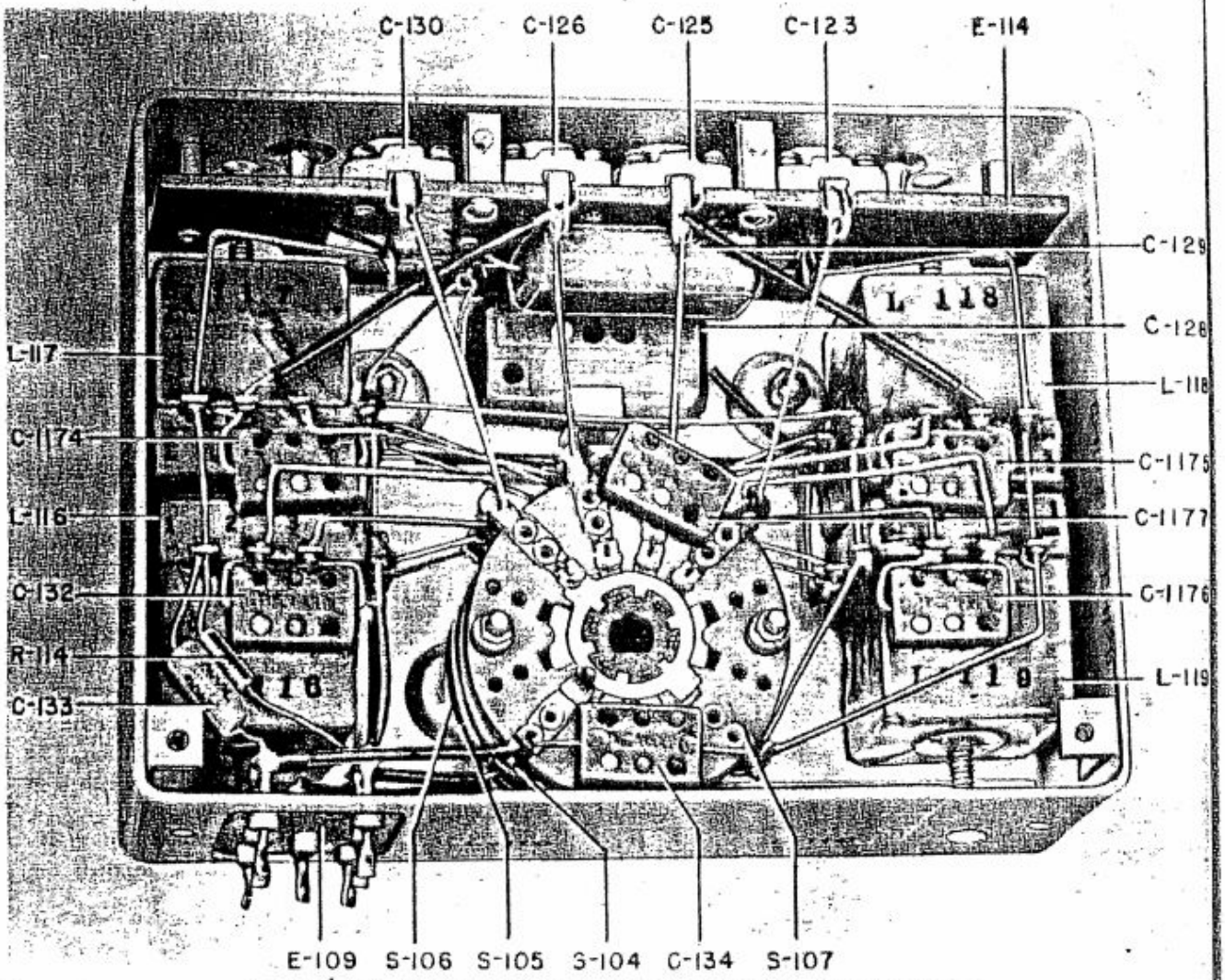

Figure 5-22. Antenna Transformer Assembly L-103, Cover Removed (Radio Compass Unit R-101/ARN-6 or R-101A/ARN-6)

for possible operation of both IF channels by tuning in stations on each band. If beat-frequency oscillator operates on one IF channel and not the other, check alignment of beat-frequency-oscillator transformer T-104. Follow beat-frequency-oscillator alignment instructions given in paragraph 4., this section. If above checks do not reveal cause of trouble, remove beat-frequency-oscillator transformer T-104 and check all components, switches, and wiring. (See figure 5-25.)

(3) "CW" OPERATION NORMAL ON "LOOP" OR "ANT." ONLY.—Make socket voltage measurements for tone oscillator V-109B. Check components in circuits where voltages are incorrect. If voltages are normal, check the coupling capacitor C-168 and suppressor grid resistor R-141 for open or short circuits. Also check C-1125, as this capacitor and inductance L-107 together determine the resonant frequency of the tone oscillator. Make resistance check of L-107A; see table 5-17 or 5-18, "Coil Measurements."

l. NOISY RECEIVER OPERATION.—To locate the cause of noisy receiver operation, check the following components for possible source of trouble:

Component	*Source of Trouble*
Electron Tubes	Microphonic or shorted tube elements, or socket connections.
Receiver Circuits	Loose wires, defective resistors, or capacitors.
Plugs and Receptacles	Poor contacts or high resistance shorts.

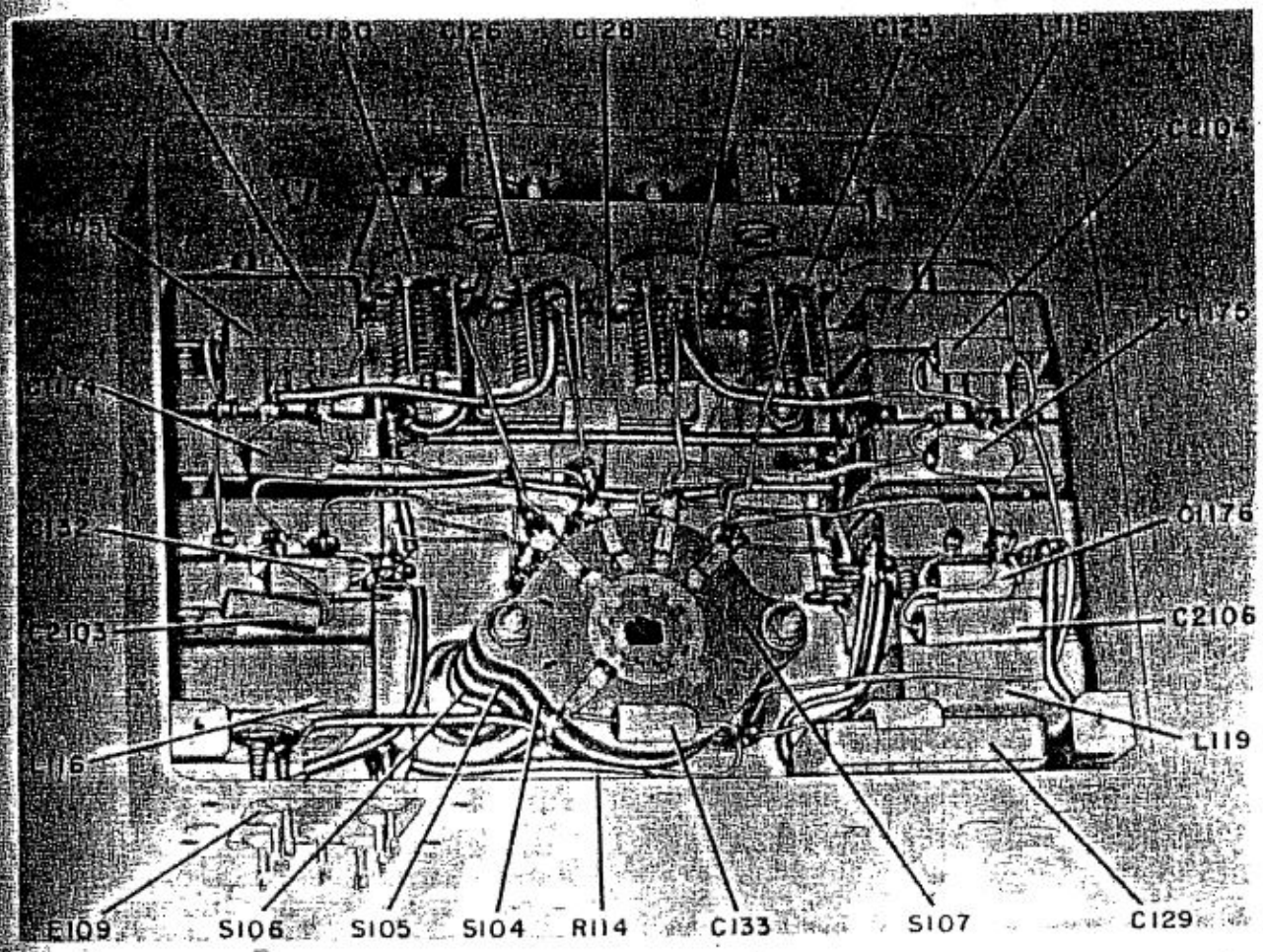

Figure 5-22A. Antenna Transformer Assembly L-103, Cover Removed (Radio Compass Unit R-101B/ARN-6)

Component	*Source of Trouble*
Loop Assembly	Corroded or damaged connectors.
Vibrator Unit	Defective vibrator or vibrator has filter.
Antenna	Loose antenna lead-in within antenna coupling unit.
Variable Capacitors	Dirt between plates.
Switches	Dirty contacts.
Relays	Dirty contacts.
Bonding	Loose connections.
Power Source	Loose or corroded cable connections or fuses.

4. CIRCUIT ALIGNMENT PROCEDURE.

a. GENERAL.

(1) Radio Compass AN/ARN-6 has been carefully aligned by the manufacturer, and thoroughly inspected before shipment. The circuit design and ruggedness of the equipment assures that proper alignment will be maintained over a long period of time. Before changing any adjustments, be certain that the difficulty is not the result of the more common troubles such as: weak or noisy tubes, incorrect operating voltages, broken or corroded connectors, and damaged cords or cables. Factory adjustments are not to be altered unless absolutely necessary. Measure any questionable performance characteristics in accordance with paragraph 9 of this section.

(2) All aligning capacitors are accessible from the

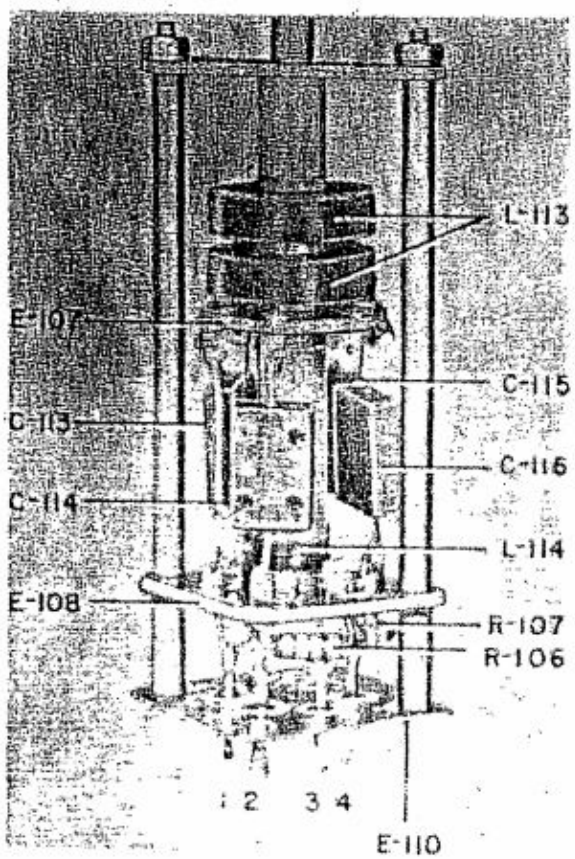

Figure 5-23. Phaser L-102, Cover Removed

top of the chassis. Also accessible from the top are the following inductance core adjusting screws: beat-frequency oscillator; 1st, 2nd and 3rd IF secondaries; IF trap, bands two and three of the RF oscillator, 1st and 2nd RF amplifiers, loop and antenna transformers. (See figures 5-26 or 5-27 and 5-28.) Inductance core adjustment screws accessible from the bottom of the chassis are: 1st, 2nd, and 3rd IF primaries; and bands one and four of the RF oscillator, 1st and 2nd RF amplifiers, loop and antenna transformers. (See figure 5-29 or 5-30.)

(3) For alignment purposes, it is necessary to have a signal generator covering the required frequencies, and capable of being modulated 30 per cent at 400 cycles per second. This should be connected to the receiver through a 0.1-microfarad capacitor. The signal level to be applied in all cases is that level which is required to give an output of about 50 milliwatts into a 300-ohm output meter plugged into the active control box, with the audio control R-302 set at maximum volume. As adjustments proceed, reduce the signal generator's output to keep the audio output to its proper level. See table 6-3 for expected final value of signal input. If a 300-ohm output meter is not available, any 300-ohm load can be used, such as a 300-ohm resistor or two pairs of Headsets HS-33 connected in parallel. The power output is given by the formula: Milliwatts $= \frac{10E^2}{3}$, where E is the voltage across the 300 ohms, measured by a vacuum-tube AC voltmeter. For example, 3.87 volts corresponds to 50 milliwatts, and 1.94 volts to 12.5 milliwatts.

b. INTERMEDIATE-FREQUENCY ALIGNMENT.

(1) GENERAL.—The two-channel IF section of the receiver consists of three stages of amplification. The 455-kc IF channel is used when the receiver is operated on the 100-200-kc band and the 142.5-kc IF channel is used on all remaining bands. Follow the general instructions given in paragraph 4.*a*.(3), preceding. Also perform the following preparatory step.

Turn all primary and secondary IF core adjusting screws counterclockwise to the stops.

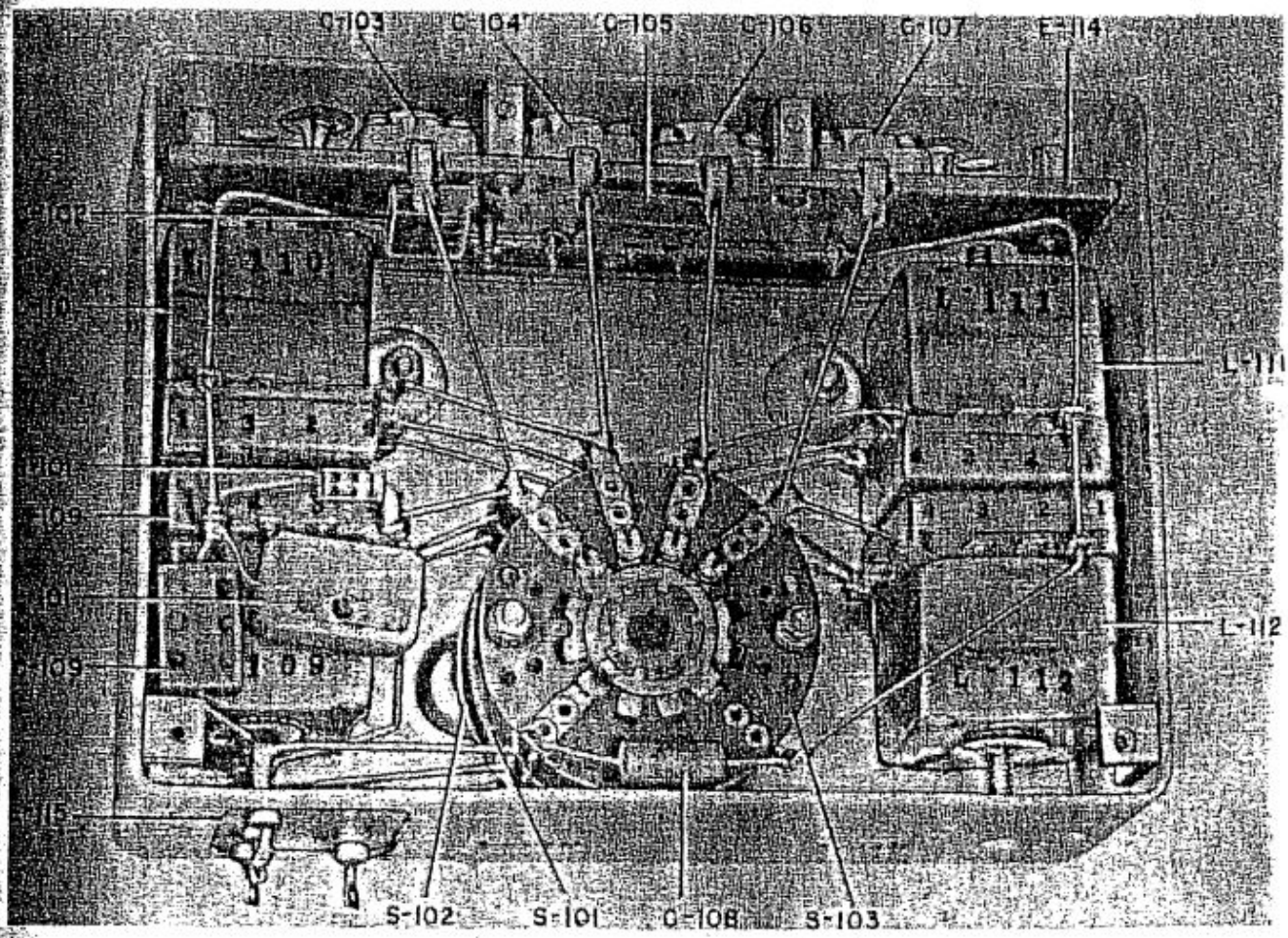

Figure 5-24. Loop Transformer Assembly L-101, Cover Removed (Radio Compass Unit R-101/ARN-6 or R-101A/ARN-6)

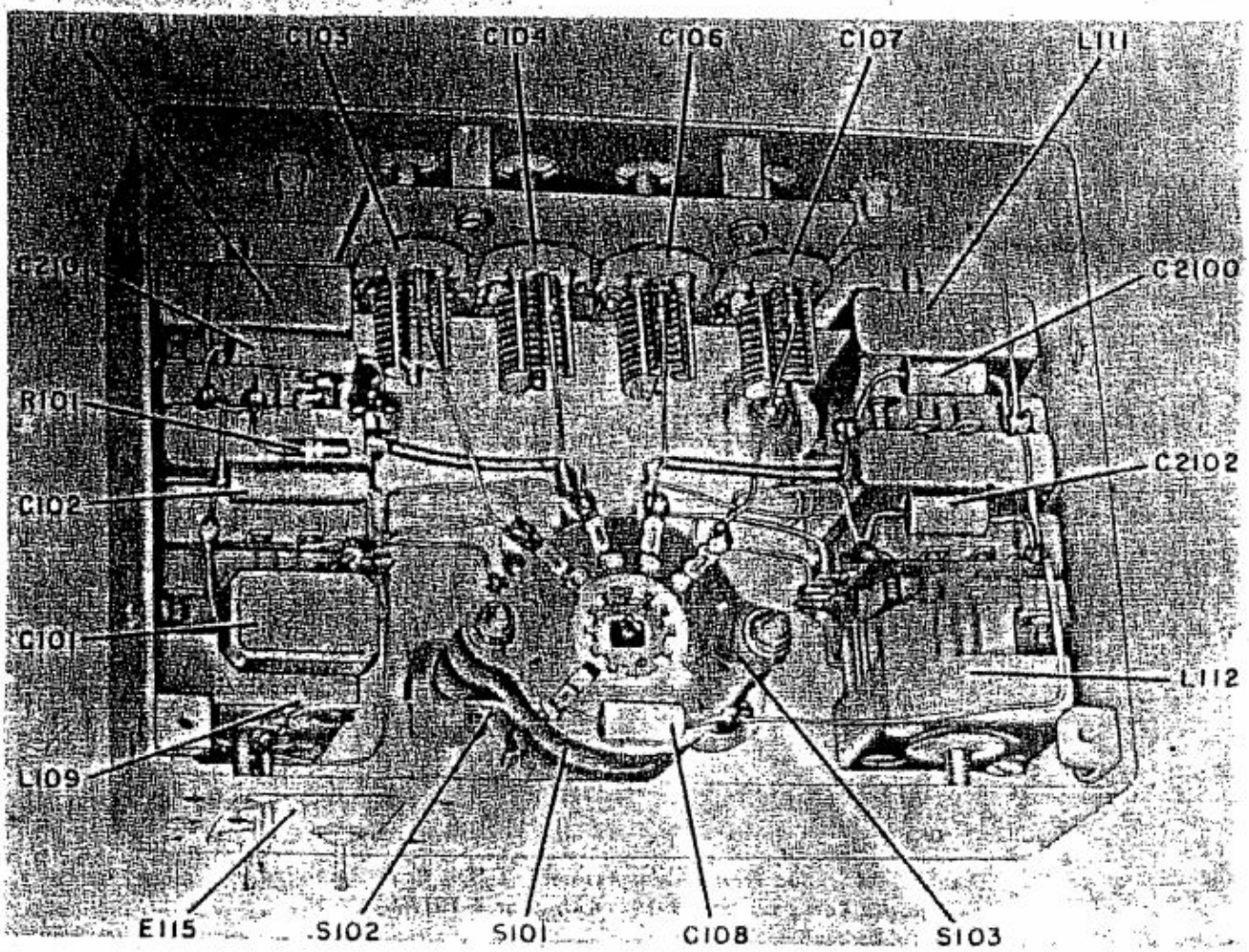

Figure 5-24A. Loop Transformer Assembly L-101, Cover Removed (Radio Compass Unit R-101B/ARN-6)

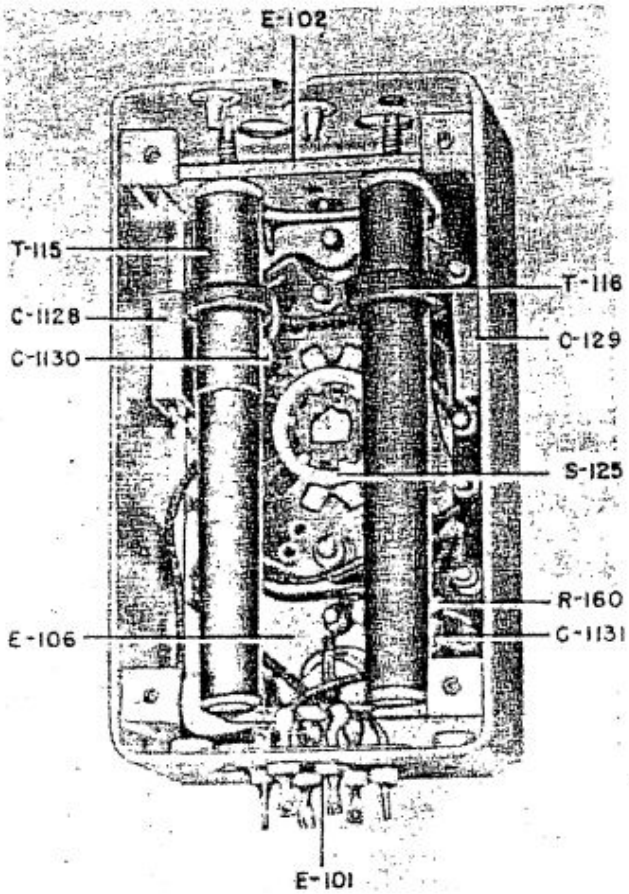

Figure 5-25. Beat-Frequency-Oscillator Transformer Assembly T-104, Cover Removed

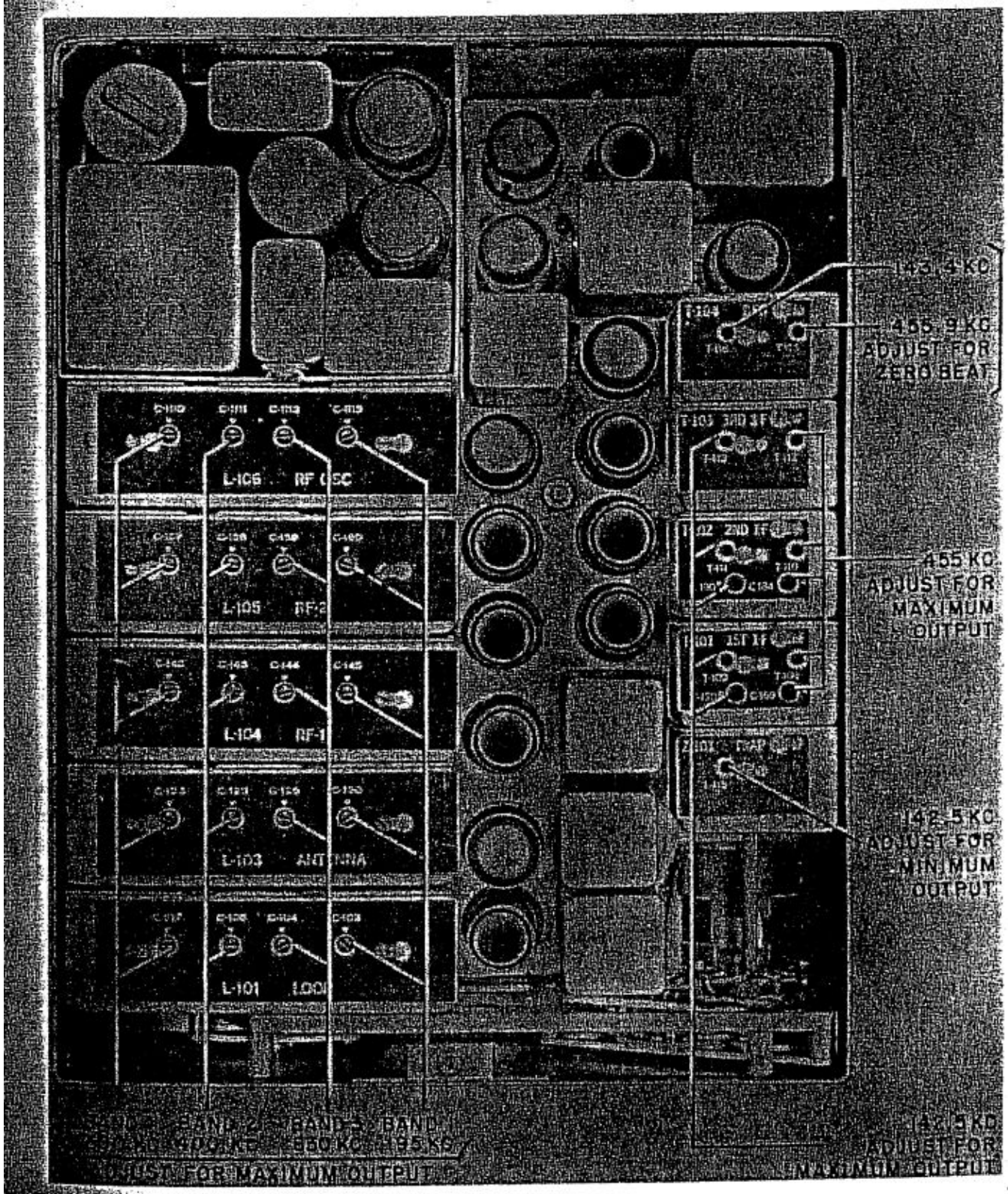

Figure 5-26. Radio Compass Unit R-101/ARN-6, Top View, Alignment Points

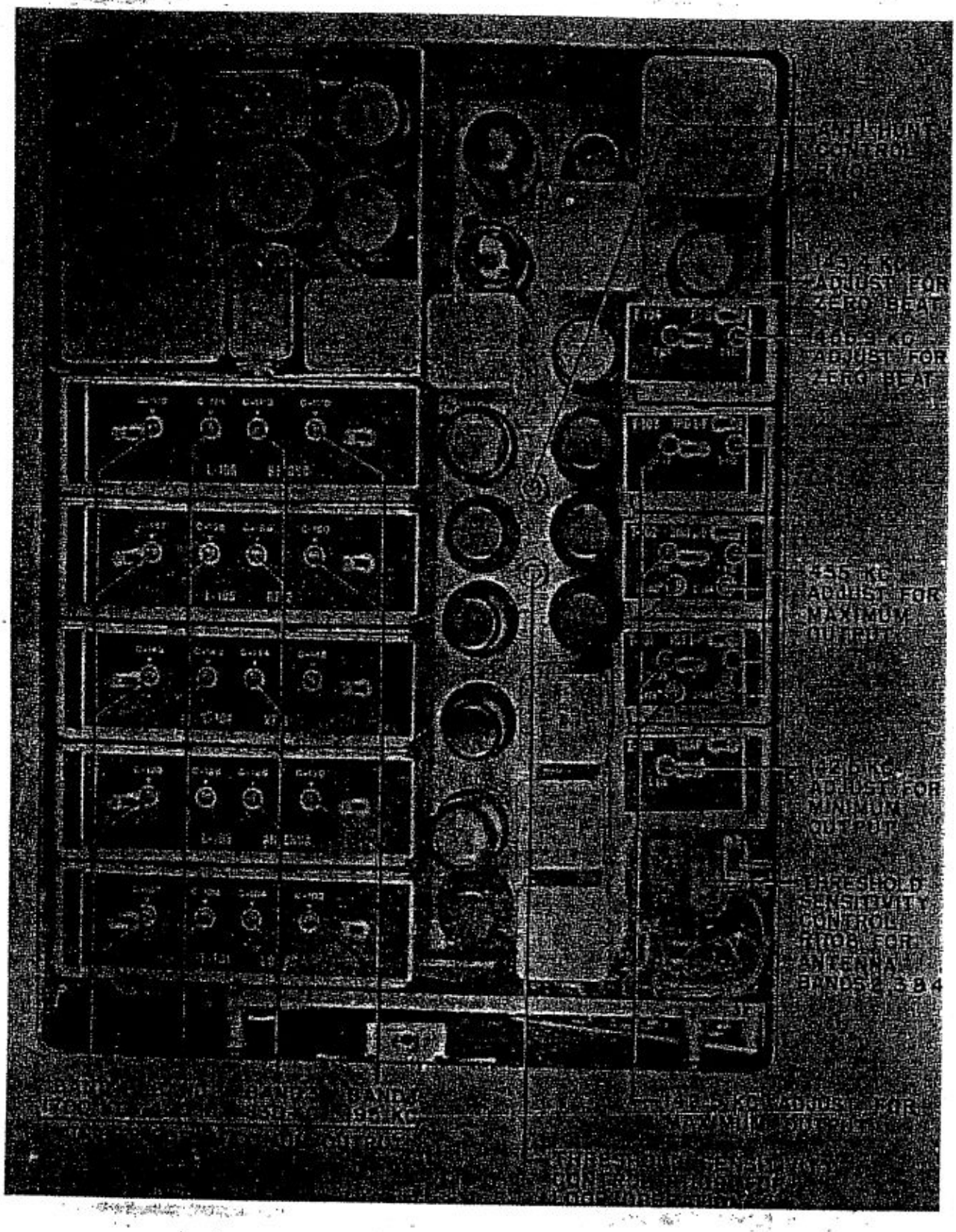

Figure 5-27. Radio Compass Unit R-101A/ARN-6, Top View, Adjustments

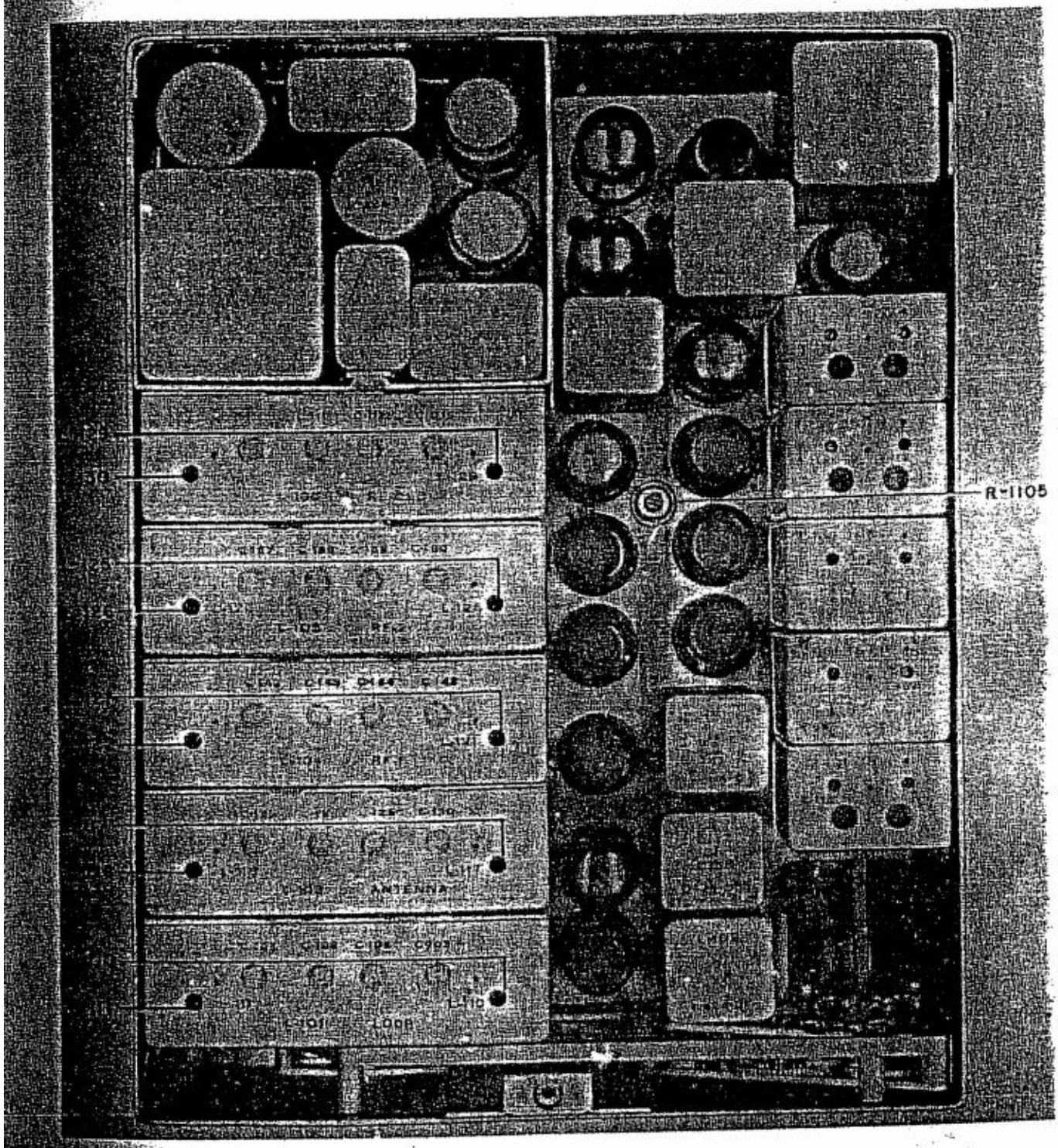

Figure 5-28. Radio Compass Unit R-101/ARN-6 and R-101A/ARN-6, Top View, Low Frequency RF Alignment Points

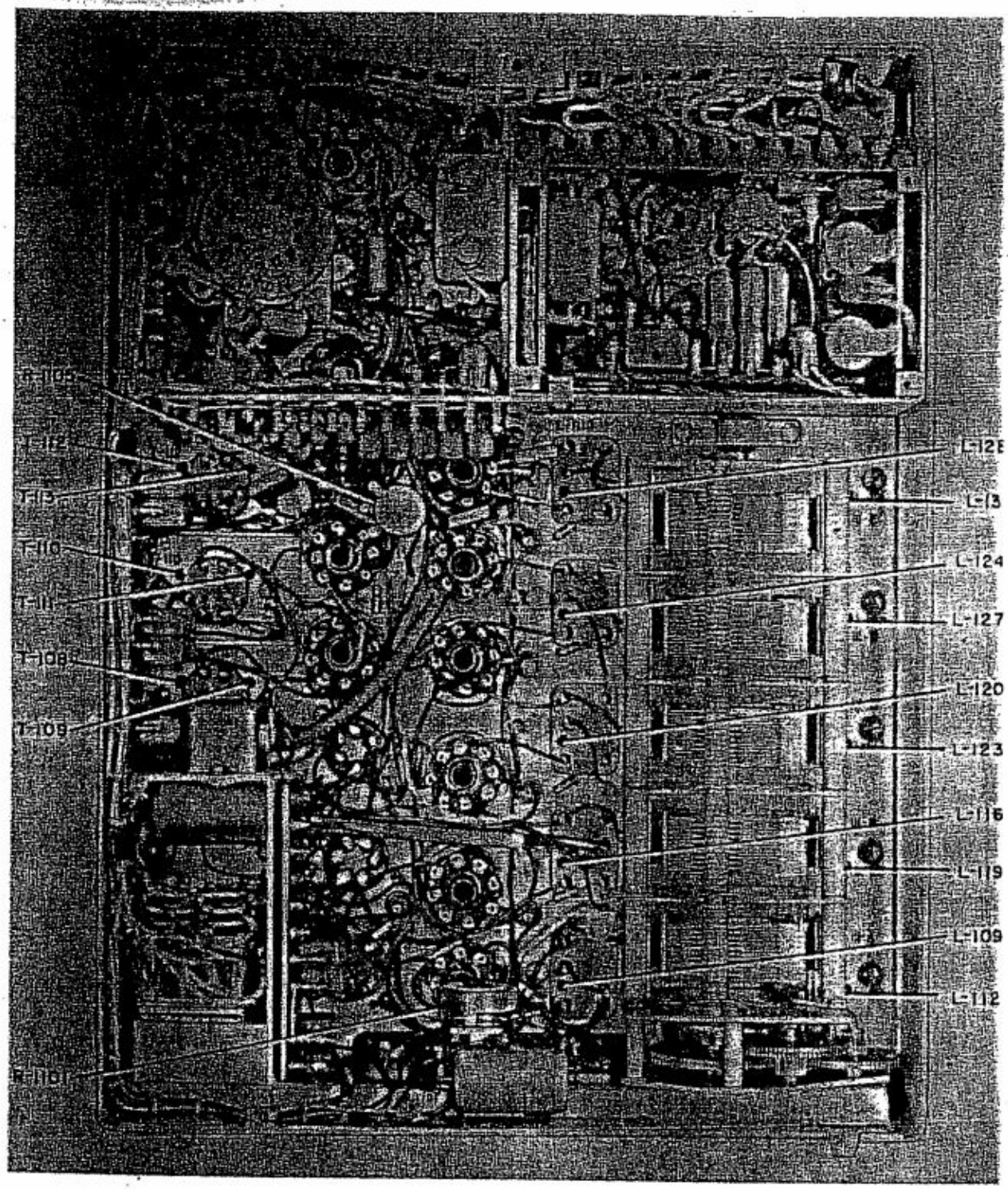

Figure 5-29. Radio Compass Unit R-101/ARN-6, Bottom View, Alignment Points

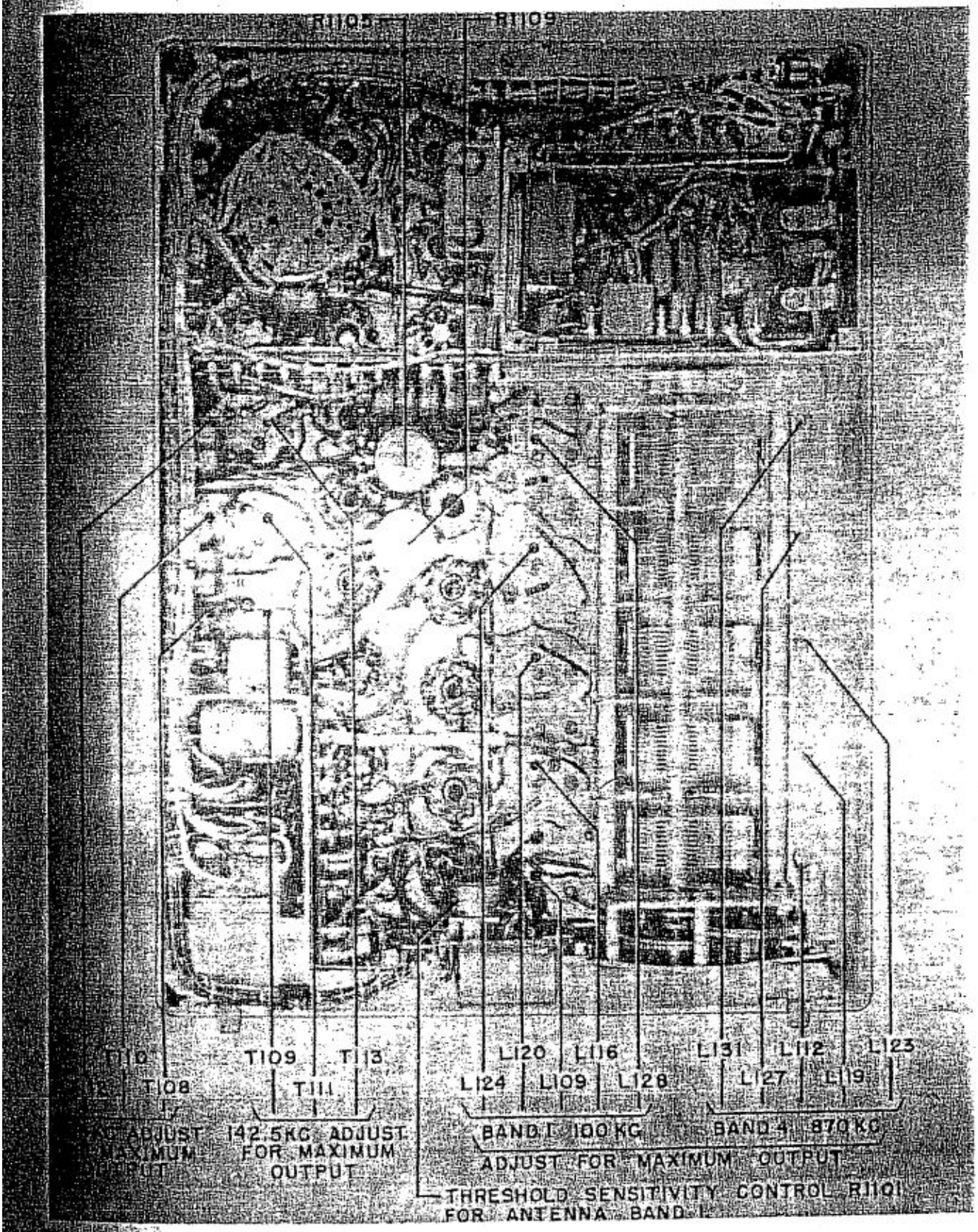

Figure 5-30. Radio Compass Unit R-101A/ARN-6, Bottom View, Adjustments

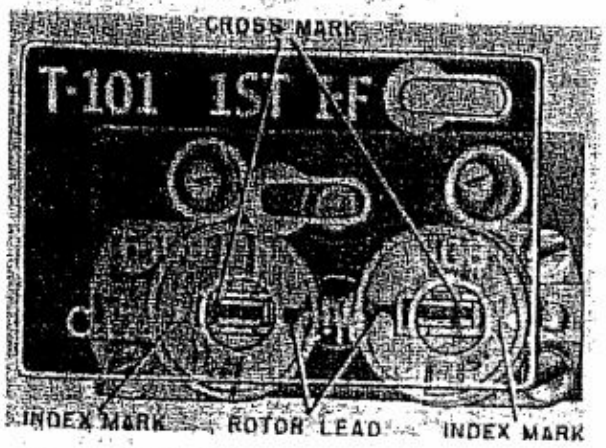

Figure 5-31. Trimmer Capacitors, Minimum Capacity Setting

(2) 455-KC IF CHANNEL ALIGNMENT.

(a) THIRD IF STAGE ALIGNMENT.

1. Turn the function switch to "ANT." position and allow receiver to warm up for approximately 20 minutes. Turn the band switch to the 100-200-kc band and turn the "AUDIO" control fully clockwise.

2. Apply a 455-kc signal, 30 per cent modulated at 400 cycles per second, through a 0.1-microfarad capacitor, to the grid (pin 4) of the second IF amplifier, V-107.

3. Align the primary and secondary of T-112 for maximum output, reducing the signal generator output as necessary to keep the receiver output below 50 milliwatts. If a broad indefinite resonant peak is observed, it may be the result of overloading the circuit. Reduce the input signal to remedy the difficulty. The final input signal for a 50-milliwatt output should be approximately 47,000 microvolts.

(b) SECOND IF STAGE ALIGNMENT.

1. Apply the 455-kc aligning signal to the grid (pin 4) of the first IF amplifier tube, V-106.

2. Alternately align the primary and secondary of T-110 until maximum output is obtained.

Note

It is possible, in some cases, to peak the IF transformers at two positions of the core adjusting screws. The proper core adjustment is obtained by first turning the core adjusting screws fully counterclockwise and then clockwise to first resonant peak.

3. Adjust trimmer capacitor C-184 for maximum output. The final input signal for a 50-milliwatt output should be approximately 2,200 microvolts.

(c) FIRST IF STAGE ALIGNMENT.

1. Apply the 455-kc aligning signal to the grid (pin 8) of the first detector tube, V-105.

2. Alternately align the primary and secondary of T-108 until maximum output is obtained.

3. Adjust trimmer capacitor C-169 for maximum output. The final input signal required for a 50-milliwatt output should be approximately 390 microvolts.

(3) 142.5-KC IF CHANNEL ALIGNMENT.

(a) THIRD IF STAGE ALIGNMENT.

1. Turn the bandswitch to the 200-410-kc band and the "AUDIO" control fully clockwise.

2. Apply a 142.5-kc signal, 30 per cent modulated at 400 cycles per second, through a 0.1-microfarad capacitor to the grid (pin 4) of the second IF amplifier tube, V-107.

3. Alternately align the primary and secondary of T-113 until maximum output has been obtained, reducing the signal input as necessary to keep the receiver output below 50 milliwatts. Overloading the circuit with too high an input signal will result in a broad resonant peak. Reduce the input signal to remedy the difficulty. The final input signal for a 50-milliwatt output should be approximately 47,000 microvolts.

(b) SECOND IF STAGE ALIGNMENT.

1. Feed the 142.5-kc aligning signal to the grid (pin 4) of the first IF amplifier tube, V-106.

2. Alternately align primary and secondary of T-111 for maximum output.

3. Adjust trimmer capacitor C-190 for maximum output. The signal input for a 50-milliwatt output should be approximately 1,800 microvolts.

c. FIRST IF STAGE ALIGNMENT.

1. Feed the 142.5-kc alignment signal into the grid (pin 8) of the first detector tube, V-105.

2. Alternately align the primary and secondary of T-109 until maximum receiver output is obtained. Keep receiver output below 50 milliwatts by reducing signal input when necessary.

3. The final input required for a 50-milliwatt output should be approximately 200 microvolts.

(4) Replace the IF cover plates and tighten cover plate screws.

c. BEAT-FREQUENCY-OSCILLATOR ALIGNMENT.

(1) GENERAL.—The frequency of the beat-frequency oscillator, when properly aligned, should be 900 cycles per second above the frequency of the IF channels. Therefore, the beat-frequency oscillator should be adjusted for 455.9 kc for the 455-kc IF channel, and 143.4 kc for the 142.5-kc IF channel.

(2) ALIGNMENT.

(a) Turn function switch to "ANT." and allow the receiver to warm up approximately 20 minutes.

(b) Place "CW-VOICE" switch in "CW" position.

(c) Switch to the 100-200-kc band.

(d) Apply a 455.9-kc unmodulated signal of approximately 50,000 microvolts, to the grid (pin 4) of the 2nd IF amplifier V-107.

(e) Adjust T-115 for zero beat in headphones.

(f) Switch to the 200-410-kc band and tune signal generator to 143.4 kc.

(g) Adjust T-116 for zero beat in the headphones.

d. RADIO-FREQUENCY ALIGNMENT.

(1) PREPARATORY INSTRUCTIONS.

(a) It is necessary to see that the IF sections of the receiver are properly aligned before starting work on the RF sections.

(b) The tuning mechanism must be connected, so that the capacitor C-111 is against its full-mesh stop, when the dial is at "ALIGN" (mark is at low-frequency end of 850-1750-kc band). To reduce lost motion, use as short a flexible tuning shaft as possible. Moreover, the control box, receiver, and flexible shaft should be fastened to prevent motion; it is possible to flex the shaft so there will be relative rotation between the two ends.

(c) Check the accuracy of tuning indications at the calibration points given in table 5-1 by feeding a modulated signal into the receiver according to paragraph 4*d.*(4)*(a)*. If the tuning is accurate, the RF oscillator, L-106, is correctly aligned.

(2) RF OSCILLATOR.—The RF oscillator requires special care in alignment, as upon its accuracy depends the calibration of the tuning dial. The procedure is given in detail below, and will serve as a guide for the use of table 5-1 in aligning the other RF stages.

(a) Connect the signal generator through 0.1-microfarad to pin 8 of V-105. Turn on the modulation.

(b) Tune the receiver and signal generator to 200 kc.

(c) Adjust C-1115 for maximum indication on the output meter.

(d) Tune the receiver and signal generator to 100 kc.

(e) Adjust L-128 for maximum indication on the output meter.

(f) Repeat steps *(b), (c), (d) and (e)*, concluding with step *(c)* until no further adjustments are required. This is necessary because adjustments at one end affect the alignment at the other. Unless the band was very seriously out of alignment, five adjustments should be sufficient—three at the high end, and two at the low end of the band.

(g) Repeat steps *(b)* to *(f)* for bands 2 and 3, using frequencies, signal generator connections, and adjustment points as given in table 5-1.

(h) When the 850-1750-kc band is being aligned, the following additional step should be taken after adjusting C-1110 for the first time. In proper operation, the oscillator frequency should exceed the signal frequency by the intermediate frequency. Under certain conditions it is possible to adjust the oscillator, when tuned to 1700 kc, to a frequency below 1700 kc instead of above, as normal, and get a response. To prove a correct adjustment, tune the signal generator successively to twice the IF above and below 1700 kc, namely, 1985 kc and 1415 kc, without touching the receiver. If the alignment at this point was performed correctly the receiver should respond at 1985 kc but not at 1415 kc. Then proceed as for the other bands.

(3) 2ND AND 1ST RF AMPLIFIERS.

(a) The *second* RF stage should be aligned next after the RF oscillator. Refer to table 5-1.

1. Connect the signal generator to proper terminal.

Table 5-1. RF Alignment Data

Stage: ⟶	*RF Osc.* L-106	*2nd RF* L-105	*1st RF* L-104	*Ant.* L-103	*Loop* L-101	*For Adjustment Location See Fig.*
Connect Sig. Gen. through 0.1 mf to ⟶	V-105, pin 8	V-104, pin 4	V-103, pin 4	see par.: 4*d.*(4)*(a)*	see par.: 4*d.*(4)*(b)*	
High Frequency End						
Band — *Freq.*						
1 — 200 kc	C-1115	C-160	C-145	C-130	C-103	5-26 or 5-27
2 — 410 kc	C-1111	C-158	C-143	C-125	C-106	
3 — 840 kc	C-1113	C-159	C-144	C-126	C-104	
4 — 1750 kc	C-1110	C-157	C-142	C-123	C-107	
Low Frequency End						
Band — *Freq.*						
1 — 100 kc	L-128	L-124	L-120	L-116	L-109	5-29 or 5-30
2 — 200 kc	L-130	L-126	L-122	L-118	L-111	
3 — 410 kc	L-129	L-125	L-121	L-117	L-110	
4 — 850 kc	L-131	L-127	L-123	L-119	L-112	

2. Align high frequency end of each band, at stated frequency.

3. Align low frequency end of each band, at stated frequency.

4. Check high frequency alignment.

5. Repeat until alignments are correct at both ends, concluding with the high frequency adjustment. This is necessary, as the changing of an adjustment at one end affects the other.

(b) Align the *first* RF stage using same procedure as the second RF stage. Refer to table 5-1 for alignment points.

(4) ANTENNA STAGE.

(a) Connect a Coupling Unit CU-65/ARN-6 or CU-65A/ARN-6 to the receiver through a Cord CG-320/ARN-6 or CG-405/ARN-6. Connect the signal generator to the binding post of the coupling unit, through a 50-micromicrofarad capacitor (in addition to the 0.1 microfarad capacitor already in the lead from the signal generator).

(b) The alignment procedure is the same as that for the RF amplifiers given in paragraph (3) above.

(c) Sensitivity control R-1101 (in R-101/ARN-6) or sensitivity controls R-1101, R-1108, and R-1109 (in R-101A/ARN-6) should be at maximum (clockwise). Adjust "AUDIO" control and signal generator output so that the receiver audio output is 50 milliwatts, with the 30-per-cent 400-cycle modulation on, and not over 12.5 milliwatts (representing noise) with the modulation off. This signal-to-noise power ratio of 4:1 (equivalent to a 2:1 voltage ratio) is a usual standard of adjustment.

(5) LOOP STAGE.

(a) For proper alignment of the loop stage a standard radio compass test cage should be used. Operate the equipment on "LOOP." Tune the receiver and signal generator to the aligning frequency and turn the loop with the "LOOP L-R" switch for maximum signal output. Proceed as outlined in paragraph *(b)* below. If a standard test cage is not available the following method may be used for feeding a signal into the loop stage without upsetting the input impedance of the circuit. Wind a small radiating loop of six turns, about 6 inches in diameter, using insulated wire. Connect the loop to output terminals of the signal generator and locate it approximately 2 feet, center to center, from the receiving loop. Orient the radiating loop so that the opening is facing the receiving loop. Rotate the receiving loop for maximum signal. Proceed as follows:

(b) The alignment procedure is the same as that for the RF amplifiers, given in paragraph 4.*d*.(3) above.

(c) Volume control settings are determined as in paragraph 4.*d*.(4)*(c)* above.

e. IF WAVE TRAP ALIGNMENT.—The purpose of the wave trap Z-101 is to reduce interference on bands 2, 3, and 4, caused by unwanted strong signals on the IF frequency.

(1) Connect signal generator to receiver as described in paragraph 4.*d*.(4)*(a)* above.

(2) Turn receiver function switch to "ANT." Tune receiver to 200 kc on the 200-410-kc band.

(3) Tune signal generator to receive, using modulation; adjust signal generator output to 10 microvolts, and receiver audio control to 50-milliwatts output. These steps are required to prevent spurious peak adjustments, resulting from side-bands and noise effects. Then retune signal generator to 142.5 kc, and increase its output to about 1 volt. Adjust L-115, which is the coil of trap Z-101, for minimum output on the meter. See table 6-5 or 6-6 for normal IF rejection ratio.

f. ADJUSTMENT OF THRESHOLD SENSITIVITY.

(1) FOR RADIO COMPASS UNIT R-101A/ARN-6.—On band one (100-200 kc), the "ANT." and "COMP-ADF." function sensitivity control is R-1101 and it is reached through a hole (having a removable cover) in the front of the receiver (see figure 5-30). On bands two, three, and four (200-1750 kc), the "ANT." and "COMP-ADF." function threshold sensitivity control is R-1108 and it is reached through a hole (having removable cover) in the side of the receiver (see figure 5-27). The "LOOP" function sensitivity control for all bands is R-1109 and is accessible by removal of the top cover of the receiver (see figure 5-27). The proper adjustment of these controls is that which gives 35 milliwatts of noise into a standard load, at the noisiest point, when the "AUDIO" control is at maximum. To adjust these threshold controls, proceed as follows:

(a) Provide a dummy antenna by connecting Coupling Unit CU-65/ARN-6 or CU-65A/ARN-6 to the receiver through one of the antenna cables CG-320/ARN-6 or CG-405/ARN-6, and connect a 50-micromicrofarad capacitor from the antenna post to ground (in the coupling unit).

(b) Turn the function switch to "ANT." the band switch to "100-200" (band one), and permit the receiver to warm up for at least 20 minutes.

(c) Plug a 300-ohm output meter into the active control box. Turn the "AUDIO" control to maximum, and tune the receiver over the range of band one (100-200 kc) to the point at which the noise level (as shown on the output meter) is greatest.

(d) With the receiver tuned to the noisiest point, loosen the shaft locknut and adjust R-1101 (see figure 5-30) so that the noise level is 35 milliwatts. Recheck the range of band one (100-200 kc). Tighten the locknut.

(e) Leave the function switch in the "ANT." position, and by using the band switch control and the "TUNING" crank, tune the receiver through its range on bands two, three, and four (200-1750 kc). Note the point at which the noise level, as indicated on the output meter, is greatest. (This point usually occurs at the high frequency end of band two, near 400 or 410 kc.) With the receiver tuned to the noisiest point, loosen the shaft locknut and adjust R-1108 (see figure 5-27) so that the noise level is 35 milliwatts. Recheck over the tuning range. Tighten the locknut.

(f) Connect a well shielded dummy loop, place the function switch in the "LOOP" position, and the "AUDIO" control to maximum.

(g) Tune the receiver over its entire range, on all four bands (100-1750 kc), noting the point at which the noise level (as indicated on the output meter) is greatest. With the receiver tuned to the noisest point, adjust R-1109 (see figure 5-27) so that the noise level is 35 milliwatts. Recheck over the full tuning range (100-1750 kc).

(h) Remove the dummy loop and the dummy antenna.

(2) FOR RADIO COMPASS UNIT R-101/ARN-6.—The threshold sensitivity control, R-1101, is reached through a hole with a removable cover, in the front of the receiver. For location of R-1101 see figure 5-29. The proper adjustment of this control is that which will give 35 milliwatts of noise into a standard load, at the noisiest point, when the "AUDIO" control is at maximum. To adjust, proceed as follows:

(a) Turn function switch to "ANT." and let receiver warm up for at least 20 minutes. Connect Coupling Unit CU-65/ARN-6 or CU-65A/ARN-6 to the receiver through one of the antenna cords CG-320/ARN-6 or CG-405/ARN-6.

(b) Connect a 50-micromicrofarad capacitor from the antenna post to ground, in the coupling unit. Shield carefully the receiver and antenna connections so that no outside signal will be received. Plug a 300-ohm output meter into the active control box.

(c) Turn "AUDIO" control to maximum, and tune receiver over its entire range, in all four bands, noting the point at which the noise level, as shown on the output meter, is greatest. (This point usually occurs at the high frequency end of band 2; near 400 or 410 kc.) With the receiver tuned to the noisiest point, loosen the shaft locknut and adjust R-1101 so that the noise level is 35 milliwatts. Recheck over the full tuning range. Tighten the shaft locknut.

(d) Remove the dummy antenna.

g. ADJUSTMENT OF LOOP MOTOR ANTI-HUNT CONTROL.—This adjustment is made to eliminate hunting of loop drive motor, when the loop is at its null, or equilibrium position, in "COMPASS" or "ADF" operation. The hunting is caused by spurious voltages, developed in the thyratron-transformer combination. By feeding back a properly phased portion of these voltages, the hunting can be minimized without impairing accuracy or sensitivity. R-1105, shown in figures 5-26 and 5-27, controls the amount of feedback. When insufficient voltage is fed back, the loop will still oscillate slightly about its null; if too much, the speed of response will be decreased in the immediate vicinity of the null point, although final accuracy will be the same.

(1) Use a signal, modulated 30 per cent at 400 cycles per second, of about 100,000 microvolts per meter field strength, which must be obtained from a radio compass test cage.

(2) Turn function switch to "COMP-ADF." Allow receiver to warm up for 20 minutes.

(3) Tune compass receiver to resonance with the input signal.

(4) Loosen control locknut and turn feedback control R-1105 fully counterclockwise.

(5) Switch to "LOOP" and with the "LOOP L-R" switch rotate loop 45 degrees off true bearing.

(6) Switch to "COMP-ADF." and note action of loop as it swings to the bearing. The loop should overshoot the true bearing and then hunt, or oscillate about the null point.

(7) Turn control R-1105 clockwise until hunting stops.

(8) Switch to "LOOP" and repeat steps (5) and (6) above. This time, if a correct adjustment was reached in step (7), the loop should overshoot the null slightly, once in each direction, and come to rest.

(a) If loop does not overshoot null point, turn control R-1105 slightly counterclockwise until proper adjustment is obtained.

(b) Should loop overshoot bearing and oscillate more than twice before coming to rest, turn control R-1105 slightly clockwise until proper adjustment is obtained.

(9) After proper adjustment has been made, tighten control locknut.

5. DISASSEMBLY OF UNITS.

IMPORTANT

After any servicing, perform necessary tropicalization at once. See paragraph 7.

a. RADIO COMPASS UNIT R-101/ARN-6 OR R-101A/ARN-6.—After removing the radio compass unit from its mounting, the upper and lower covers may be taken off by giving the "Air-loc" fasteners a quarter turn counterclockwise, preparatory to further disassembly.

(1) BAND SWITCH MECHANISM.

(a) REMOVAL AND REPLACEMENT.

1. Loosen the shaft-lock nut, and remove the attaching nut for threshold sensitivity adjustment R-1102.

2. Move R-1101 to one side, and remove the bracket on which it was mounted.

3. Unsolder the six leads from band-switch terminal board E-112.

4. Loosen the covers of the band-switch shaft ports by removing one screw from each; the covers are then pushed to one side to allow removal of the shafts.

5. Withdraw the shafts from the receiver, as in figure 5-32. The RF coil shaft, O-110, can be started by grasping the head with pliers, or by using a slim screwdriver behind the panel to get under the cross-pin in the shaft head and pry it out; the IF coil shaft, O-111, can be started by hand from the inside.

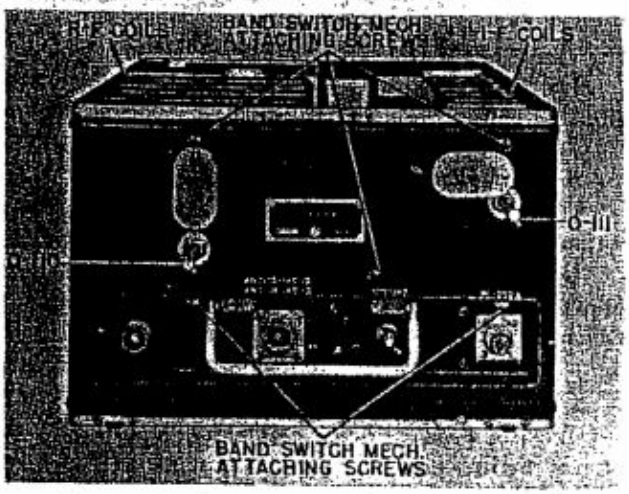

Figure 5-32. Radio Compass Unit R-101/ARN-6 or R-101A/ARN-6, Front View

6. Remove the five screws, indicated in figure 5-32, which hold the mechanism frame.

7. Lift the mechanism out of the receiver. By lifting the motor end out first, the mechanism can be slipped out endwise, past the receptacle for the cover fastener.

8. Before the mechanism is replaced, it is necessary to be sure all the switch wafers and the mechanism are aligned with each other. |Ordinarily the switch wafers will not have been moved; means for setting these will be found in paragraph 5.*a*.(2)(*e*), this section, on removal and replacement of the coil assemblies.| It is usually necessary only to see that the mechanism is at the same setting that it was when removed. A quick visual check can be made by looking through the shaft openings in the IF switch wafers, and seeing that they are at the same angle as the switch wafer on the mechanism.

9. After having made sure of the alignment of the holes, apply lubrication according to figure 5-38, and replace the mechanism by reversing the steps taken in removing it.

(*b*) DISASSEMBLY AND REASSEMBLY.

1. The motor can be removed, after unsoldering the electrical connections, by taking out four screws which hold the mounting plate, with attached motor.

2. Switch wafers S-126 (of R-101/ARN-6) and S-126 and S-128 (of R-101A/ARN-6) are attached by two screws. Figure 5-33 shows how the mounting parts are assembled. When reassembling the switch to the frame, be sure the turned-up ears on the switch rotor fit into the two notches in the adapter ring 0-108.

3. The gear train is dissambled by removing the triangular bearing plate, which is held by three screws. (The gear train is shown in figures 5-33 and 5-34.) The gears can be removed in the sequency 0-105, 0-104, and 0-106. It is necessary that the pin on 0-105 be out of any slot in geneva disc 0-103 to lift the gear out; otherwise, there is interference between the "horns" of 0-103 and the milled clearance slot in the shaft of 0-105. 0-106, the gear which is directly meshed with the motor shaft gear, can be removed if 0-103 is moved along its axis to the extent of its play.

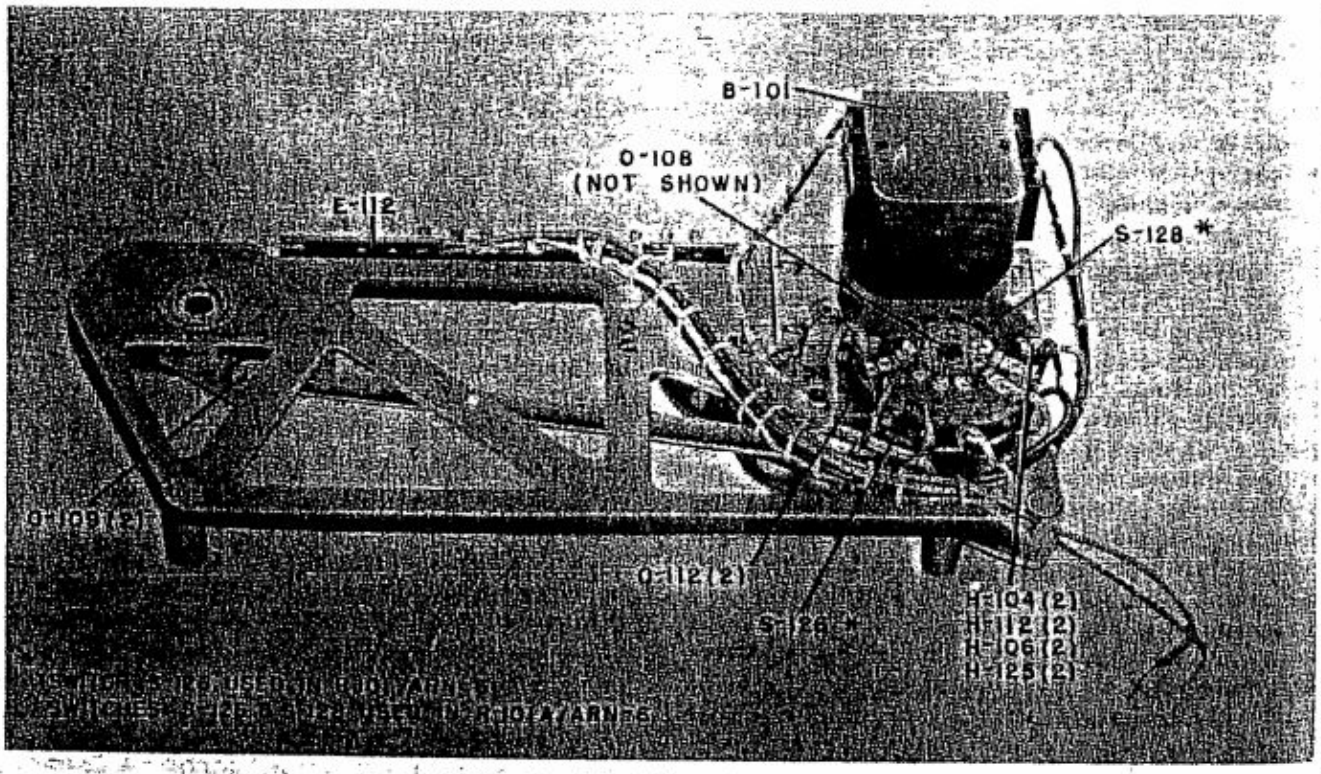

Figure 5-33. Band-Switch Mechanism, Motor Side

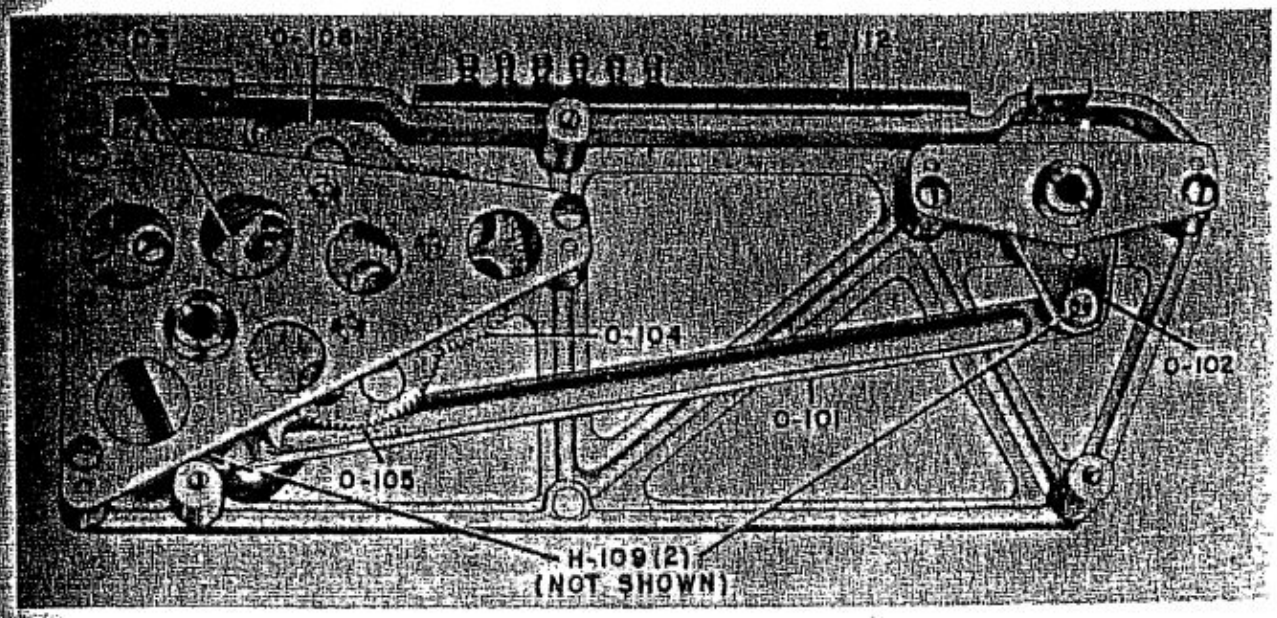

Figure 5-34. Band-Switch Mechanism, Gear Side

f. The geneva disc 0-103 and the arm 0-102 can be removed, if necessary. Remove link 0-101 by first removing retainer rings 0-109; be careful not to lose washers H-109. To remove 0-103, after disassembling the gear train, take off the adapter ring 0-108, which is held by two setscrews. (A small wrench to fit the setscrews will be found in the coil spring retainer rivered inside the case, near the band-switch mechanism.) 0-103 can then be lifted out. 0-102 is removable after taking off the small bearing plate which holds it.

Note

The frame and the two plates, which contain the shaft bearings, are a matched set. If more than one mechanism is being worked on at the same time, use care not to mix the sets.

5. When reassembling the mechanism, reverse the disassembly procedure, noting that the adapter ring 0-108 is located with the cross-slot away from the frame, and at right angles to the slot in the opposite end of the hub, or shaft, of geneva disc 0-103. Final tightening of the setscrews in 0-108 should be done with a switch shaft 0-111 temporarily set in place, to insure correct alignment.

(2) RF AND IF COIL ASSEMBLIES.

(a) Remove proper band-switch shaft by opening the port on the front panel, and sliding the shaft straight out. (See figure 5-32.) Use care not to break the shaft. The RF coil shaft, 0-110, can be started by grasping the head with pliers, or by using a slim screwdriver behind the panel to get under the cross-pin in the shaft head and pry it out; the IF coil shaft, 0-111, can be started by hand from the inside.

(b) Unsolder all connections from the terminals of the coil assembly to be removed. These are accessible under the chassis.

(c) Remove the two screws holding the coil assembly in place, and lift the coil assembly out.

(d) To remove trap Z-101, it will be necessary to loosen transformer T-119 and the large relay shield around loop relay K-101, to allow convenient access to the terminals. See paragraph 5.*a.*(3)(*a*) below.

(e) In replacing the coils, be sure the switch wafers are properly lined up to suit the position of the band-switch mechanism. Figure 5-35 shows the switch

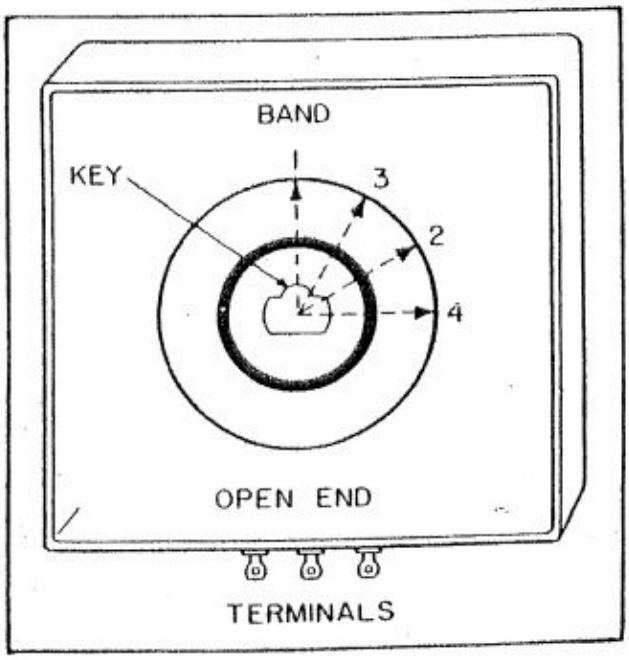

Figure 5-35. Band-Switch Positions

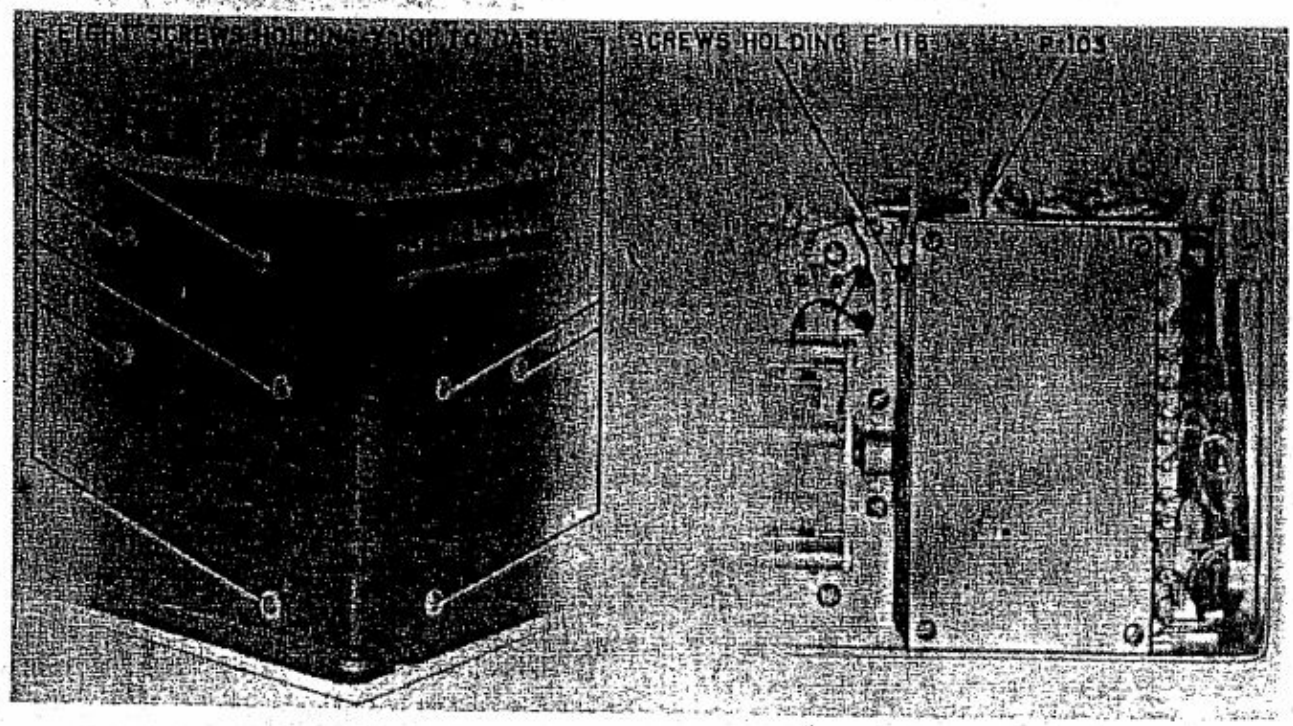

Figure 5-36. Vibrator Inverter Unit Y-101, Removal

position for different bands, as seen from the open side of the coil assembly can. All the band-switch wafers except S-114, in 3rd IF T-103, may be 180 degrees away from the position shown. Check can be made electrically for proper positioning of S-114. Apply an ohmmeter between terminals #7 and #8 of T-103. If continuity is not indicated, the switch rotor should be turned 180 degrees.

(3) LOOP RELAY K-101. *(See figures 5-9 and 5-3 or 5-4.)*

(a) To remove K-101, the RF shields must be moved to one side, for accessibility. Remove the screw directly beneath J-101; this detaches the small shield covering the end wafer. Remove transformer T-119 from the large shield; it is not necessary to unsolder connections from T-119 if care is used not to break them. Loosen the four screws holding the large shield —two at the side and two at the front. The large shield can then be tipped over, giving better access to the connection on the relay. After unsoldering connections, the relay can be removed by unfastening the four screws which hold the base.

(b) After replacing the relay, and the shields, check carefully to see that no connections have been broken.

(4) TUNING CAPACITOR C-111.

Note

Take care to avoid bending the plates even slightly; tuning and operating characteristics may be affected. For mechanical protection, mesh plates fully by turning one of the gears before starting to remove C-111.

(a) Unsolder from the capacitor the 11 connections, two each from L-101, L-103, L-104, L-105, L-106, and a heavy ground lead.

(b) Remove the two screws attaching the capacitor to the front panel.

IMPORTANT

If any spacers are found between the panel and C-111, these must be replaced when reassembling.

(c) Remove the two screws holding the clamp at the opposite end of the capacitor.

(d) The capacitor can now be lifted out.

(e) Replace by reversing the procedure. Note

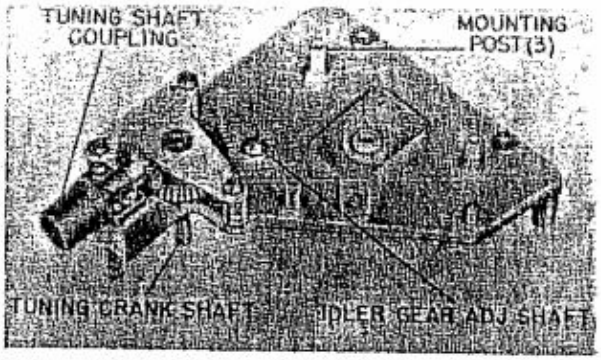

Figure 5-37. Tuning Mechanism, Bottom View

that the leads from terminals 1 of L-101, L-103, L-104, and L-105 and terminal 6 of L-106 are soldered to the insulated terminals at the side of C-111; the leads from terminal 2 are attached to the tabs riveted to the section dividers of C-111. Since the latter leads go directly to ground, do not assume they may be connected to any convenient ground point; they must be connected as they originally were.

(5) VIBRATOR-INVERTER UNIT Y-101. *(See figure 5-36.)*

(a) Unsolder the 13 leads from terminal board E-134.

(b) Disconnect input cable by pulling P-103 out of J-102, and remove screw attaching E-116 to Y-101.

(c) Remove eight screws attaching Y-101 to the outer case.

(d) Y-101 may then be slid out.

(e) Replace by reversing the above procedure.

b. CONTROL BOX C-149/ARN-6 OR C-149A/ARN-6. *(See figures 5-7 and 1-6.)*—The control box is fairly simple mechanically; the instructions given below cover a few cases where complications may occur.

(1) REMOVAL OF TUNING MECHANISM.

(a) Remove control pushbutton E-301, band-switch knob E-304, tuning crank 0-302, and light-control knob E-302. Loosen setscrews disclosed when the band-switch knob is taken off. Loosen the axial setscrew found in the special round nut 0-301 under the screw which held the control button.

(b) Detach ring-shaped connector P-301, control switch S-301, and band switch S-303. Electrical connections to these need not be unsoldered, but disconnect the two yellow leads to indicator light X-301.

(c) Unscrew the push rod which operates S-301; this is threaded into O-301, and is normally kept in position by the axial setscrew mentioned in paragraph *(a)* above.

(d) Lift out the four-leaved detent star and shaft; in order to do this it is necessary to hold the detent arm back.

(e) Remove the three screws on the front of the box—one each under the light control, the spare lamp holder, and the tuning crank. The mechanism can now be removed, using care not to damage the dial.

(f) The idler gear, between the tuning-crank gear and dial gear, rotates on a hex-headed bearing, attached with a #6-32 screw, indicated in figure 5-37. The hole in the casting, through which the screw passes, is oversize to permit removing the gear for best meshing. Do not loosen this adjustment unless necessary.

(g) In reassembling, be sure the push rod operating S-301 is adjusted to a suitable position before tightening the setscrew in 0-301. Also note that with the band-switch knob at the 200-410-kc band, switch wafer S-303 makes connection to the terminal with the black lead with red tracer (terminal nearest "A" of T-301 when correctly assembled).

(2) OTHER PARTS.

(a) To remove the tuning meter M-301, it will be found necessary to loosen and move to one side either the function switch or the "LOOP L-R" switch. Unless the "LOOP L-R" switch is to be removed as well, it will be found easier to loosen the function switch, because the wiring to it permits greater freedom of motion.

(b) The indicator light receptacle X-301 cannot be removed without first removing the tuning mechanism as described in paragraph (1) above.

bA. CONTROL PANEL C-403A/A. *(See figures 1-1A and 5-7A.)*—The control panel is fairly simple mechanically; the instructions given below cover a few cases where complication may occur.

(1) REMOVAL OF PLASTIC LIGHTING PANEL.

(a) Remove the "TUNING" crank and the knobs from function switch, "LOOP L-R" switch, band switch, and "VOLUME" control.

(b) Remove caps from panel lights I-103, I-104, I-105, I-106, and I-107. Pull the ring gasket from each of the five lights.

(c) Remove the five screws from the front of the plastic panel—two on each side edge and one on the bottom edge.

(d) Remove the plastic panel by lifting straight out from the metal subpanel.

(e) In reassembling, it may be necessary to loosen the nuts holding the five panel lights to the subpanel. Tighten these nuts after the plastic panel is replaced and aligned.

(2) REMOVAL OF TUNING MECHANISM.

(a) Remove plastic lighting panel (See paragraph (1) above).

(b) Remove the screws holding the harness cable clamps, the bandswitch wafer S-101, and resistors R-101, R-102, R-109, and R-110. Electrical connections need not be unsoldered, but disconnect the ground wire and the wires from dial light I-102 by removing the lugs.

(c) Remove the three screws on the front of the subpanel—one each above panel light I-103, above the dial window, and below the tuning crank.

(d) In reassembling, be sure the insulating washer is in place where dial lamp I-102 projects through the metal subpanel. Also note that with the bandswitch knob and mask at the 850-1750 kc band, switch wafer S-101 closes the circuit to the terminal with the brown lead with slate tracer (terminal nearest R-109 when correctly assembled).

(3) OTHER PARTS.

(a) To remove the tuning meter M-101, remove the plastic lighting panel to gain access to the meter mounting screws. It will be found necessary to loosen and move to one side either the function switch or the "LOOP L-R" switch. Unless the "LOOP L-R" switch is to be removed as well, it will be found easier to loosen the function switch, because the wiring to it permits greater freedom of motion. In reassembling, be sure the meter light I-101 is properly insulated from its bracket and the subpanel.

(b) Dial light receptable I-102 cannot be removed without first removing the tuning mechanism.

bB. CONTROL PANEL C-758/A. *(See figures 1-1B and 5-7B.)*—The instructions given below cover a few cases where complication may occur in the removal of certain parts.

(1) REMOVAL OF PLASTIC PANEL.

(a) Remove all knobs and the tuning crank by loosening the setscrews holding the knobs in position on their shafts.

(b) Unscrew the four panel lamps and one dial lamp.

(c) Remove the four screws from the front of the plastic panel—two on each side.

(d) Remove the plastic panel by lifting straight out from the metal subpanel.

(e) In reassembling, carefully position the plastic panel so that the panel light holders will not have to be realigned.

(2) REMOVAL OF TUNING MECHANISM.

(a) Remove the "TUNING" crank by loosening the two setscrews holding crank to its shaft.

(b) Remove the three screws holding the block-coupling to the coupling spacer and the tuning mechanism is free.

(3) OTHER PARTS.

(a) To remove the tuning meter M-101, remove the plastic panel in order to gain access to the meter mounting screws. Remove the two terminal screws; the meter is then easily slid out.

(b) Dial lamp retainer for I-102 cannot be removed without first removing the mounting bracket holding J-101.

(c) The soldered connections to receptacle J-101 may be inspected by removing the four screws securing the receptacle to the mounting bracket and the four screws holding the bracket to the mounting plate. The bracket is then removed without hooking onto or breaking any of the leads adjacent to it. The accessibility of the receptacle is limited by the rigidity of the leads wired to it.

bC. CONTROL PANEL C-1514/A. *(See figures 1-1C and 5-7C.)*—The control panel is fairly simple mechanically; the instructions given below cover a few cases where complication may occur.

(1) REMOVAL OF PLASTIC LIGHTING PANEL.

(a) Remove the "TUNING" crank and the knobs from the function switch, "LOOP L-R" switch, bandswitch, and "VOLUME" control.

(b) Remove the caps from panel lights I-1, I-2, and I-3. Pull the ring gasket from each of the three lights.

(c) Remove the three screws from the front of the plastic panel—one from each bottom corner and one from upper right corner.

(d) Remove the plastic panel by lifting straight out from the metal subpanel.

(e) In reassembling, it may be necessary to loosen the nuts holding the three panel lights to the subpanel. Tighten these nuts after the plastic panel is replaced and aligned.

c. LOOP AS-313/ARN-6, AS-313A/ARN-6, AND AS-313B/ARN-6. *(See figures 2-1 and 2-2.)*

(1) REMOVAL OF LOOP HOUSING FROM HOUSING PLATE: — Remove the 12 screws from around the base of the housing and lift off.

(2) REMOVAL OF LOOP. — Remove the ten screws around the loop assembly. Lift out loop. (In case of belly mounting the loop will drop out. Care must be taken to support it till all screws are removed.)

(3) DISASSEMBLY OF LOOP.—Any further disassembly and reassembly requires use of a high power induction heater with special coil, a vacuum pump of high power, means for introducing dry nitrogen at required pressure, and a special tool for sealing the exhaust tube. The loop is ball-bearing equipped throughout, with adequate lubrication supplied at time of assembly. Additional lubrication should never be required and should only be applied where the above equipment is available.

CAUTION

Do not attempt to open the loop by any means other than a properly designed induction coil of high power. Application of heat to the case seal for more than a few seconds may result in injury to the glass insulators, which cannot be replaced.

d. INDICATORS ID-90( )/ARN-6, ID-91( )/ARN-6, ID-231( )/ARN-6, AND ID-92( )/ARN-6.—The

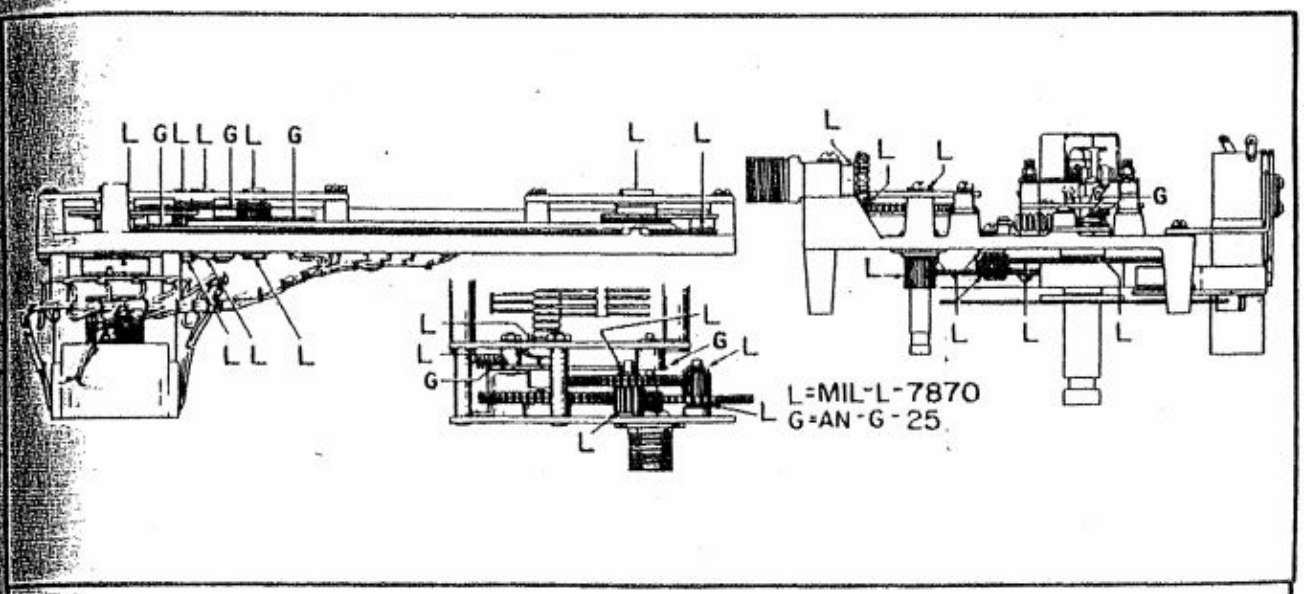

LUBRICATION CHART

MAJOR ASSEMBLY	PART	TYPE OF LUBRICANT	QUANTITY OF LUBRICATION	LUBRICATION PERIOD
CONTROL BOX C-149/ARN-6 AND C-149A/ARN-6	DIAL MECHANISM BEARINGS GEAR MESHES DETENT CAM	 MIL-L-7870 MIL-L-7870 AN-G-25	 ONE DROP THIN FILM THIN FILM	 1,000 HRS. 1,000 HRS. 1,000 HRS.
RADIO COMPASS UNIT R-1011/ARN-6	BAND CHANGE MECHANISM BEARINGS GEAR MESHES GENEVA DISC AND PIN	 MIL-L-7870 AN-G-25 AN-G-25	 ONE DROP THIN FILM THIN FILM	 1,000 HRS. 1,000 HRS. 1,000 HRS.
	TUNING CAPACITOR DRIVE ASSEMBLY BEARINGS GEAR MESHES AND STOP CAM	 MIL-L-7870 AN-G-25 AN-G-25	 ONE DROP THIN FILM THIN FILM	 500 HRS. 500 HRS. 500 HRS.
TUNING SHAFT MC-124	CORE SHAFTING	AN-G-25	THIN FILM	AT ASSEMBLY
COUPLING MC-203A	GEAR BOX GEARS	AN-G-25	PACK GEAR BOX WITH APPROX. ONE OUNCE	AT ASSEMBLY OR WHEN SERVICED

Figure 5-38. Lubrication Chart

indicators are not subject to the field servicing. Their disassembly and reassembly require special techniques, vacuum pumps, and equipment for gas-filling.

6. LUBRICATION.

Figure 5-38 gives the lubrication points and kind of lubricant needed for the proper maintenance of the equipment. No lubrication is required for Control Panel C-758/A.

7. TROPICALIZATION.

a. REFERENCE.—Reference is made to T.O. No. 16-1-41, "General Instructions for Tropicalization of Communications Equipment."

b. OCCASION.—In the case of small repairs, tropicalizing can be done with a small brush. Numerous or extensive repairs should be followed by overall tropicalization. Furthermore, the effectiveness of an appli

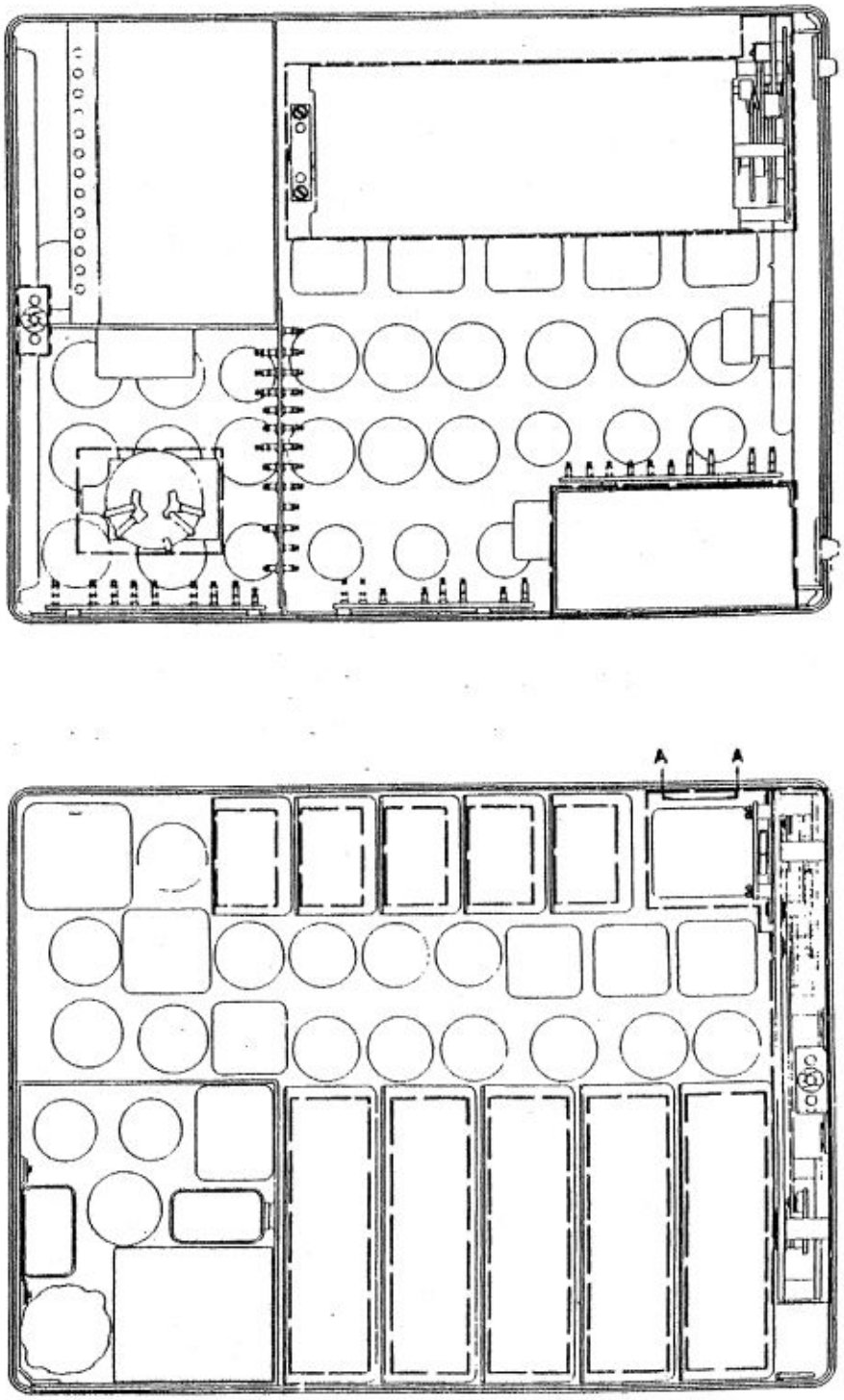

Figure 5 39. Tropicalization Masking

cation of fungicidal lacquer is not permanent; the coat may become damaged, may peel off, or may lose strength. No general rule can be laid down as to advisable frequency of overall tropicalization; experience with similar equipment under similar climatic conditions is necessary. However, should evidence of fungus-growth appear, the fungus should be carefully cleaned out, the equipment thoroughly overhauled, and retropicalization performed in accordance with the reference given in paragraph 7*a.* above.

c. SPECIFIC INSTRUCTIONS.

(1) RADIO COMPASS UNIT R-101/ARN-6 OR R-101A/ARN-6.

(a) Mask all areas bounded by the heavy dash lines in figure 5-39.

(b) Mask the outside of the case, or housing, and the small tongues holding the cover.

(c) Mask tube socket contacts by inserting dummy or burned-out tubes. If the operating tubes must be used, mask their envelopes.

(d) Relay K-102 may be removed, as the unsoldering and replacement of connections will be found easier than the task of masking the contacts. The threads and tops of the mounting posts should then be masked for good electrical grounding. After replacing the relay, the soldered joints should be tropicalized by brush.

(e) Band-switch shafts 0-110 and 0-111 should be removed before spraying.

(f) Remove cover from vibrator inverter Y-101; mask exterior surface of cover-brackets, and the tapped holes.

(g) Remove cover plates from tops of coil cans, before applying masking.

(h) Follow instructions given in T.O. Number 16-1-41.

Note

Maximum drying temperature for the receiver, before application of lacquer, is 140° F. (60°C.)

WARNING

The case of the receiver is substantially closed. To avoid possibility of an explosion of solvent fumes, from sparking at relay contacts, allow the receiver to dry 24 hours before replacing the covers.

(i) The "MFP-(date)" stamp is applied at A-A, figure 5-39.

(2) OTHER MAJOR ASSEMBLIES, AND COMPONENTS.—Because of the inconvenience of masking switch wafers, multi-contact connectors, and similar items, hand-brush application of the tropicalizing compound is suggested in the case of all subject parts not treated in the receiver. This includes the control box, the various mountings, and the interiors of the RF and IF coil assemblies and relays in the receiver. New replacement parts are furnished already tropicalized, where the parts require it; in making replacements it is necessary only to touch up scuffed surfaces (as, for example, where lockwashers or nuts have "bitten" through the lacquer coat), the soldered connections, and accidental breaks in coatings on nearby parts.

8. TYPICAL ELECTRICAL MEASUREMENTS.

a. VOLTAGE MEASUREMENTS.

(1) GENERAL.—The voltage measurements listed in the following tables were made with a 1,000-ohm-per-volt voltmeter in all cases except where otherwise stated.

(2) CONNECTOR PANEL VOLTAGES ON TERMINAL BOARD E-501 OR E-502.—Make these measurements between indicated terminals and ground with a 1,000-ohm-per-volt voltmeter. Input voltages to equipment 26.5 volts DC. "AUDIO" control and threshold sensitivity control, R-1101, are set fully clockwise. Antenna disconnected. Compass receiver must be removed from its mounting to gain access to the connector panel terminal board. Use Special Purpose Cable CX-1021/ARN-6 to make necessary electrical connections between receiver and mounting. (See table 5-2.)

Table 5-2. Connector Panel Voltages

Term	Function Switch	Scale	Voltage	Circuit	Remarks
2	"COMP."	—	0	Ground	
3	"COMP."	25 AC	0-10v	Autosyn signal	Reading depends on indicator setting, and varies over stated range
4	"COMP."	25 AC	0-10v	Autosyn signal	Reading depends on indicator setting, and varies over stated range
16	—	—	—	Tuning meter	Do not read; may damage tuning meter
20	"COMP."	100 AC*	58v	Loop drive	
	"ANT."		0		
21	"COMP."	100 DC	26.5v	Loop damping DC	
	"LOOP"		26.5v		
	"ANT."		0		
22	"COMP."	50 AC	23v	Autosyn rotor	
23	"COMP."	50 DC	26.5v	Band-switch con.	Band switch at 100-200 kc
24	"COMP."	50 DC	26.5v	Band-switch con.	Band switch at 200-410 kc
25	"COMP."	50 DC	26.5v	Band-switch con.	Band switch at 410-850 kc
26	"COMP."	50 DC	26.5v	Band-switch con.	Band switch at 850-1750 kc
28	"COMP."	25 DC	13.5v	Dial light	
29	"COMP."		0	Neg. DC supply	
30	"COMP."		0	Neg. DC supply	
31	"COMP."	50 DC	26.5v	Ant. relay con.	
34	"COMP."	50 DC	26.5v	Pos. DC supply	
	"ANT."		0	Ant. relay con.	
35	"COMP."	50 DC	26.5v	Loop relay con.	
	"LOOP"		0		
36	"COMP."	50 DC	0	Changeover relay con.	When control button is pushed, has 26.5 volts
38	"ANT."	50 DC	26.5v		
	"LOOP"		3-10v	Manual "Loop left"	
	"COMP."	100 AC	90v		
	"LOOP"		94v		
39		Same as 38		Manual "Loop right"	
41	"COMP."	50 DC	26.5v	Plate, beat-frequency oscillator and Tone	"CW-VOICE" switch at "CW"
42	—	—	—	Tuning meter	Do not read; may damage tuning meter
44	"ANT."	10 DC	0-7v	Audio control	Varies between 0v and 7v, according to volume control setting
49	"COMP."	50 DC	26.5v	Power lead to receiver	
61	—	—	—	Tuning meter	Do not read; may damage tuning meter

*Use series capacitor.

Note—"COMP" position on function switch of Control Panel C-1514/A is indicated as ADF (Automatic Direction Finder).

(3) TUBE SOCKET VOLTAGES.—Measurements are made from indicated tube socket terminals to ground. Function switch in "COMP-ADF." positions and "CW-VOICE" switch in "VOICE" position unless otherwise noted. Input voltage to equipment 26.5 volts DC. For type of test equipment used refer to the tables on the following pages.

Table 5-3—Tube Socket Voltages (Radio Compass Unit R-101A/ARN-6)

(Measurements made with a 1,000-ohm-per-volt voltmeter)

Tube Type: JAN	*V-101 12SK7*	*V-102 12SX7-GT*	*V-103 12SK7*	*V-104 12SK7*	*V-105 12SY7*	*V-106 12SK7*	*V-107 12SK7*	*V-108 12SW7*	*V-109 12SX7-GT*	*V-110 12SX7-GT*	*V-111, V-112 26A7-GT*	*V-113 12SX7-GT*	*V-114 12SK7*
Pin 1	Shell	Grd "B"	Shell	Shell	Suppressor	Shell	Shell	Shell	Grid "B"	Grid "A"	Grid	Grid "B"	Shell
Scale	—	1 DC	—	—	—	—	—	—	1 DC	1 DC		1 DC	—
Reading	00	0	00	00	00	00	00	00	0(4)	0	(6)	—0.2v(6)	00
Pin 2	Heater	Plate "B"	Heater	Heater	Heater	Heater	Heater	Grid	Plate "B"	Plate "B"	Cathode	Plate "B"	Heater
Scale	50 DC	50 DC	—	50 DC	—	50 DC	—	1 DC	50 DC	25 DC	—	1 DC	50 DC
Reading	13.2v	25.5v	00	13.2v	00	13.2v	00	0	22.5v(4)	14v(7)	00	—0.2v(6)	13.2v
Pin 3	Suppressor	Cathode "B"	Suppressor	Suppressor	Plate	Suppressor	Suppressor	Cathode	Cathode "B"	Cathode "B"	Grid	Cathode "B"	Suppressor
Scale	1 DC	5 DC	1 DC	1 DC	50 DC	2.5 DC	2.5 DC	1 DC	1 DC	1 DC		—	2.5 DC
Reading	0.63v	2.4v(1)	0.7v	0.7v	25.5v	1v(2)	0	0.75v	0.45v(4)	.3v(7)	(6)	00	1.25v
Pin 4	Grid	Grid "A"	Grid	Grid	Screen	Grid	Grid	Diode Pl.	Grid "A"	Grid "A"	Plate	Grid "A"	Grid
Scale	1 DC	1 DC	1 DC	1 DC	50 DC	1 DC	1 DC	1 DC	2.5 DC	1 DC	50 DC	1 DC	1 DC
Reading	0	0	0	0	25v	0	0	0	—1.5v	0	26v	0	0
Pin 5	Cathode	Plate "A"	Cathode	Cathode	Grid, Inj.	Cathode	Cathode	Diode Pl.	Plate "A"	Plate "A"	Screen	Plate "A"	Cathode
Scale	1 DC	50 DC	1 DC	1 DC	1 DC	2.5 DC	2.5 DC	2.1 DC	50 DC	50 DC	50 DC	50 DC	2.5 DC
Reading	0.63v	25.5v	0.7v	0.7v	0	1v(2)	1.25v(3)	0	22v	25.5v	26v	23v(5)	1.25v
Pin 6	Screen	Cathode "A"	Screen	Screen	Cathode	Screen	Screen	Plate	Cathode "A"	Cathode "A"	Heater	Cathode "A"	Screen
Scale	50 DC	5 DC	50 DC	50 DC	2.5 DC	50 DC	50 DC	25 DC	—	1 DC	—	2.5 DC	50 DC
Reading	25v	2.4v(1)	25.5v	26.5v	1.1v	26v	26v	12v	00	0.5v	00	1.1v(5)	26v
Pin 7	Heater	Heater	Heater	Heater	Heater	Heater	Heater	Heater	Heater	Heater	Heater	Heater	Heater
Scale	50 DC	50 DC	50 DC	50 DC	50 DC	50 DC	50 DC	—	—	—	50 DC	50 DC	50 DC
Reading	26.5v	13.2v	13.2v	26.5v	13.2v	26.5v	13.2v	00	00	00	26.5v	13.2v	26.5v
Pin 8	Plate	Heater	Plate	Plate	Grid, Sig.	Plate	Plate	Heater	Heater	Heater	Plate	Heater	Plate
Scale	50 DC	50 DC	50 DC	50 DC	1 DC	50 DC	50 DC	50 DC	50 DC	50 DC	50 DC	50 DC	50 DC
Reading	24v	26.5v	25v	25v	0	26.5v	25.5v	13.2v	13.2v	13.2v	26v	26.5v	25.5v

NOTES:

(1) 2.8v with function switch at "Loop".
(2) 2.2v (5v meter scale), with function switch at "Loop".
(3) During band-switch operation, rises to approx. 7v.
(4) "CW-VOICE" Switch at "CW".
(5) "CW-VOICE" Switch at "CW", function switch at "Loop".
(6) Variation too great for significant readings.
(7) Approximate value; subject to considerable variation.
00 denotes solid ground connection.
0 denotes zero or unreadably low voltage.

Table 5-4—Tube Socket Voltages (Radio Compass Unit R-101A/ARN-6)

(Measurements made with a 1,000-ohm-per-volt voltmeter)

Tube Type: JAN	*V-101 12SK7*	*V-102 12SX7-GT*	*V-103 12SK7*	*V-104 12SK7*	*V-105 12SY7*	*V-106 12SK7*	*V-107 12SK7*	*V-108 12SW7*	*V-109 12SX7-GT*	*V-110 12SX7-GT*	*V-111, V-112 26A7-GT*	*V-113 12SX7-GT*	*V-114 12SK7*
Pin 1 Scale	Shell	Grid "B" 1 DC	Shell	Shell	Suppressor	Shell	Shell	Shell	Grid "B" 1 DC	Grid "A" 1 DC	Grid	Grid "A" 1 DC	Shell
Reading	00	0	00	00	00	00	00	00	0(4)	0(5)	(6)	—0.2v(6)	00
Pin 2 Scale	Heater 50 DC	Plate "B" 50 DC	Heater	Heater 50 DC	Heater	Heater 50 DC	Heater	Grid 1 DC	Plate "B" 50 DC	Plate "A" 50 DC	Cathode	Plate "A" 1 DC	Heater 50 DC
Reading	13.2v	25.5v	00	13.2v	00	13.2v	00	0	22.5v(4)	23.3v(5)	00	—0.2v(6)	13.2v
Pin 3 Scale	Suppressor 1 DC	Cathode "B" 5 DC	Suppressor 1 DC	Suppressor 1 DC	Plate 50 DC	Suppressor 2.5 DC	Suppressor 2.5 DC	Cathode 1 DC	Cathode "B" 1 DC	Cathode "A" 2.5 DC	Grid	Cathode "A"	Suppressor 2.5 DC
Reading	0.63v	2.4v(1)	0.7v	0.7v	25.5v	1v(2)	0	0.75v	0.45v(4)	1.1v(5)	(6)	00	1.25v
Pin 4 Scale	Grid 1 DC	Grid "A" 1 DC	Grid 1 DC	Grid 1 DC	Screen 50 DC	Grid 1 DC	Grid 1 DC	Diode Pl. 1 DC	Grid "A" 2.5 DC	Grid "B" 1 DC	Plate 50 DC	Grid "B" 1 DC	Grid 1 DC
Reading	0	0	0	0	25v	0	0	0	—1.5v	0	26v	0	0
Pin 5 Scale	Cathode 1 DC	Plate "A" 50 DC	Cathode 1 DC	Cathode 1 DC	Grid, Inj. 1 DC	Cathode 2.5 DC	Cathode 2.5 DC	Diode Pl. 1 DC	Plate "A" 50 DC	Plate "B" 50 DC	Screen 50 DC	Plate "B" 25 DC	Cathode 2.5 DC
Reading	0.63v	25.5v(1)	0.7v	0.7v	0	1v(2)	1.25v(3)	0	22v	25.5v	26v	14v(7)	1.25v
Pin 6 Scale	Screen 50 DC	Cathode "A" 5 DC	Screen 50 DC	Screen 50 DC	Cathode 2.5 DC	Screen 50 DC	Screen 50 DC	Plate 25 DC	Cathode "A"	Cathode "B" 1 DC	Heater	Cathode "B" 1 DC	Screen 50 DC
Reading	25v	2.4v(1)	25.5v	25.5v	1.1v	26v	26v	12v	00	0.5v	00	0.3v(7)	26v
Pin 7 Scale	Heater 50 DC	Heater 50 DC	Heater 50 DC	Heater 50 DC	Heater 50 DC	Heater 50 DC	Heater 50 DC	Heater	Heater	Heater	Heater 50 DC	Heater 50 DC	Heater 50 DC
Reading	26.5v	13.2v	13.2v	26.5v	13.2v	26.5v	13.2v	00	00	00	26.5v	13.2v	26.5v
Pin 8 Scale	Plate 50 DC	Heater 50 DC	Plate 50 DC	Plate 50 DC	Grid, Sig. 1 DC	Plate 50 DC	Plate 50 DC	Heater 50 DC	Heater 50 DC	Heater 50 DC	Plate 50 DC	Heater 50 DC	Plate 50 DC
Reading	24v	26.5v	25v	25v	0	26.5v	25.5v	13.2v	13.2v	13.2v	26v	26.5v	25.5v

NOTES:

(1) 2.8v with function switch at "Loop".
(2) 2.2v (5v meter scale), with function switch at "Loop".
(3) During band-switch operation, rises to approx. 7v.
(4) "CW-VOICE" Switch at "CW".
(5) "CW-VOICE" Switch at "CW", function switch at "Loop".
(6) Variation too great for significant readings.
(7) Approximate value; subject to considerable variation.
00 denotes solid ground connection.
0 denotes zero or unreadably low voltage.

Table 5-5—Tube Socket Voltages (Radio Compass Unit R-101A/ARN-6)

(20,000 ohm-per-volt voltmeter)

Tube Type: JAN	*V-101 12SK7*	*V-102 12SX7-GT*	*V-103 12SK7*	*V-104 12SK7*	*V-105 12SY7*	*V-106 12SK7*	*V-107 12SK7*	*V-108 12SW7*	*V-109 12SX7-GT*	*V-110 12SX7-GT*	*V-111, V-112 26A7-GT*	*V-113 12SX7-GT*	*V-114 12SK7*
Pin 1 Scale	Shell —	Grid "B" 1 DC	Shell —	Shell —	Suppressor —	Shell —	Shell —	Shell —	Grid "B" 1 DC	Grid "B" 1 DC	Grid	Grid "B" 1 DC	Shell —
Reading	00	0	00	00	00	00	00	00	0v(4)	0	(7)	—.5v(8)	00
Pin 2 Scale	Heater 50 DC	Plate "B" 50 DC	Heater —	Heater 50 DC	Heater —	Heater 50 DC	Heater —	Grid 1 DC	Plate "B" 50 DC	Plate "B" 50 DC	Cathode —	Plate "B" 1 DC	Heater 50 DC
Reading	13.2v	25.5v	00	13.2v	00	13.2v	00	0	22.5v(4)	20v(8)	00	—.5v(8)	13.2v
Pin 3 Scale	Suppressor 1 DC	Cathode "B" 10 DC	Suppressor 1 DC	Suppressor 1 DC	Plate 50 DC	Suppressor 10 DC	Suppressor 10 DC	Cathode 10 DC	Cathode "B" 1 DC	Cathode "B" 10 DC	Grid	Cathode "B" —	Suppressor 10 DC
Reading	0.8v	2.8v(1)	0.85v	0.9v	25.5v	1v(2)	0	2v	0.8v(4)	.7(8)	(7)	00	1.6v
Pin 4 Scale	Grid 1 DC	Grid "A" 1 DC	Grid 1 DC	Grid 1 DC	Screen 50 DC	Grid 1 DC	Grid 1 DC	Diode Pl. 1 DC	Grid "A" 10 DC	Grid "A" 1 DC	Plate 50 DC	Grid "A" 1 DC	Grid 1 DC
Reading	0	0	0	0	25v	0	0	0	See Note (5)	0	26v	0v	0
Pin 5 Scale	Cathode 1 DC	Plate "A" 50 DC	Cathode 1 DC	Cathode 1 DC	Grid. Inj. 1 DC	Cathode 10 DC	Cathode 10 DC	Diode Pl. 1 DC	Plate "A" 50 DC	Plate "A" 50 DC	Screen 50 DC	Plate "A" 50 DC	Cathode 10 DC
Reading	0.8v	25.5v	0.85v	0.9v	—.2v	1v(2)	1.5v(3)	0	23.5v	25.5v	26v	25v(6)	1.6v
Pin 6 Scale	Screen 50 DC	Cathode "A" 10 DC	Screen 50 DC	Screen 50 DC	Cathode 10 DC	Screen 50 DC	Screen 50 DC	Plate 50 DC	Cathode "A" —	Cathode "A" 1 DC	Heater —	Cathode "A" 10 DC	Screen 50 DC
Reading	25v	2.8v(1)	25.5v	25.5v	1.3v	26v	26v	16.5v	00	0.75v	00	1.6v(6)	26v
Pin 7 Scale	Heater 50 DC	Heater 50 DC	Heater 50 DC	Heater 50 DC	Heater 50 DC	Heater 50 DC	Heater 50 DC	Heater —	Heater —	Heater —	Heater 50 DC	Heater 50 DC	Heater 50 DC
Reading	26.5v	13.2v	13.2v	26.5v	13.2v	26.5v	13.2v	00	00	00	26.5v	13.2v	26.5v
Pin 8 Scale	Plate 50 DC	Heater 50 DC	Plate 50 DC	Plate 50 DC	Grid, Sig. 1 DC	Plate 50 DC	Plate 50 DC	Heater 50 DC	Heater 50 DC	Heater 50 DC	Plate 50 DC	Heater 50 DC	Plate 50 DC
Reading	24v	26.5v	25v	25v	0	25.5v	25.5v	13.2v	13.2v	13.2v	26v	26.5v	25.5v

NOTES:

(1) 3.6v with function switch at "Loop".
(2) 2.5v with function switch at "Loop".
(3) During band-switch operation, rises to approx. 8v.
(4) "CW-VOICE" Switch at "CW".
(5) Oscillating circuit; meter lead affects operation. Indicated value from —0.1 to —2v, varying as tuning is changed.
(6) "CW-VOICE" Switch at "CW"; function switch at "Loop".
(7) Variation too great for significant readings.
(8) Approximate value; subject to considerable variation.
00 denotes solid ground connection
0 denotes zero or unreadably low voltage.

Table 5-6—Tube Socket Voltages R-101/ARN-6 (Radio Compass Unit R-101A/ARN-6)

(20,000 ohm-per-volt voltmeter)

Tube Type: JAN	*V-101 12SK7*	*V-102 12SX7-GT*	*V-103 12SK7*	*V-104 12SK7*	*V-105 12SY7*	*V-106 12SK7*	*V-107 12SK7*	*V-108 12SW7*	*V-109 12SX7-GT*	*V-110 12SX7-GT*	*V-111, V-112, 26A7-GT*	*V-113 12SX7-GT*	*V-114 12SK7*
Pin 1	Shell	Grid "B"	Shell	Shell	Suppressor	Shell	Shell	Shell	Grid "B"	Grid "A"	Grid	Grid "A"	Shell
Scale	—	1 DC	—	—	—	—	—	—	1 DC	1 DC		1 DC	—
Reading	00	0	00	00	00	00	00	00	0v(4)	0(6)	(7)	—.5v(8)	00
Pin 2	Heater	Plate "B"	Heater	Heater	Heater	Heater	Heater	Grid	Plate "B"	Plate "A"	Cathode	Plate "A"	Heater
Scale	50 DC	50 DC	—	50 DC	—	50 DC	—	1 DC	50 DC	50 DC	—	1 DC	50 DC
Reading	13.2v	25.5v	00	13.2v	00	13.2v	00	0	22.5v(4)	22v(6)	00	—.5v(8)	13.2v
Pin 3	Suppressor	Cathode "B"	Suppressor	Suppressor	Plate	Suppressor	Suppressor	Cathode	Cathode "B"	Cathode "A"	Grid	Cathode "A"	Suppressor
Scale	1 DC	10 DC	1 DC	1 DC	50 DC	10 DC	10 DC	10 DC	1 DC	10 DC		—	10 DC
Reading	0.8v	2.8v(1)	0.85v	0.9v	25.5v	1v(2)	0(1)	2v	0.8v(4)	1.7v(6)	(7)	00	1.6v
Pin 4	Grid	Grid "A"	Grid	Grid	Screen	Grid	Grid	Diode Pl.	Grid "A"	Grid "B"	Plate	Grid "B"	Grid
Scale	1 DC	1 DC	1 DC	1 DC	50 DC	1 DC	1 DC	1 DC	10 DC	1 DC	50 DC	1 DC	1 DC
Reading	0	0	0	0	25v	0	0	0	See Note (5)	0	26v	0v	0
Pin 5	Cathode	Plate "A"	Cathode	Cathode	Grid Inj.	Cathode	Cathode	Diode Pl.	Plate "A"	Plate "B"	Screen	Plate "B"	Cathode
Scale	1 DC	50 DC	1 DC	1 DC	1 DC	10 DC	10 DC	1 DC	50 DC	50 DC	50 DC	50 DC	10 DC
Reading	0.8v	25.5v	0.85v	0.9v	0.13v	1v(2)	1.5v(3)	0	23.5v	25.5v	26v	21v(8)	1.6v
Pin 6	Screen	Cathode "A"	Screen	Screen	Cathode	Screen	Screen	Plate	Cathode "A"	Cathode "B"	Heater	Cathode "B"	Screen
Scale	50 DC	10 DC	50 DC	50 DC	10 DC	50 DC	50 DC	50 DC	—	1 DC	—	10 DC	50 DC
Reading	25v	2.8v(1)	25.5v	25.5v	1.3v	26v	26v	16.5v	00	0.75v	00	0.8v(8)	26v
Pin 7	Heater	Heater	Heater	Heater	Heater	Heater	Heater	Heater	Heater	Heater	Heater	Heater	Heater
Scale	50 DC	50 DC	50 DC	50 DC	50 DC	50 DC	50 DC	—	—	—	50 DC	50 DC	50 DC
Reading	26.5v	13.2v	13.2v	26.5v	13.2v	26.5v	13.2v	00	00	00	26.5v	13.2v	26.5v
Pin 8	Plate	Heater	Plate	Plate	Grid, Sig.	Plate	Plate	Heater	Heater	Heater	Plate	Heater	Plate
Scale	50 DC	50 DC	50 DC	50 DC	1 DC	50 DC	50 DC	50 DC	50 DC	50 DC	50 DC	50 DC	50 DC
Reading	24v	26.5v	25v	25v	0	25.5v	25.5v	13.2v	13.2v	13.2v	26v	26.5v	25.5v

NOTES:

(1) 3.6v with function switch at "Loop".
(2) 2.5v with function switch at "Loop".
(3) During band-switch operation, rises to approx. 8v.
(4) "CW-VOICE" Switch at "CW".
(5) Oscillating circuit; meter lead affects operation. Indicated value from —0.1 to —2v, varying as tuning is changed.
(6) "CW-VOICE" Switch at "CW"; function switch at "Loop".
(7) Variation too great for significant readings.
(8) Approximate value; subject to considerable variation.
00 denotes solid ground connection
0 denotes zero or unreadably low voltage.

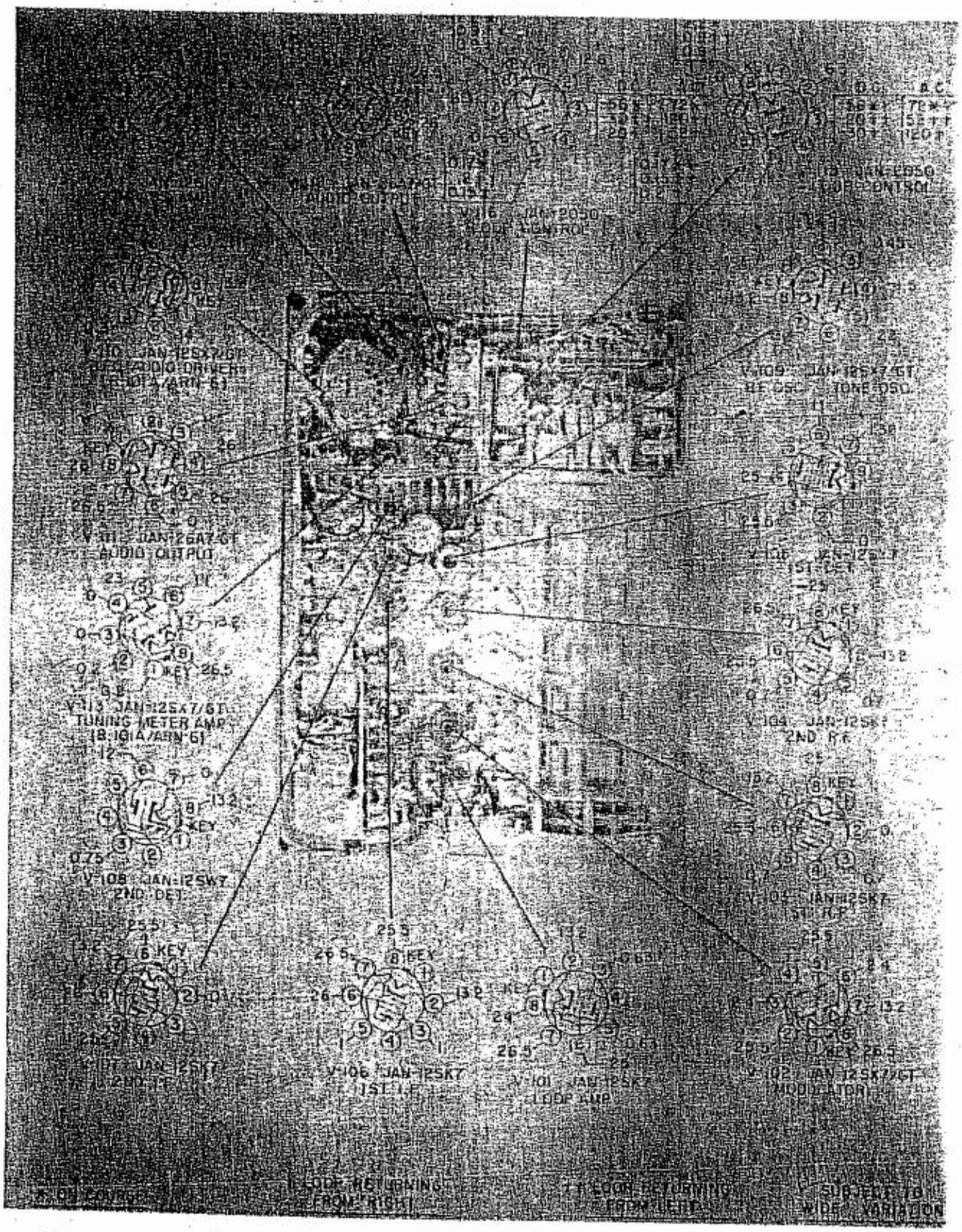

Figure 5-40. Tube Socket Voltages of Radio Compass Unit R-101A/ARN-6

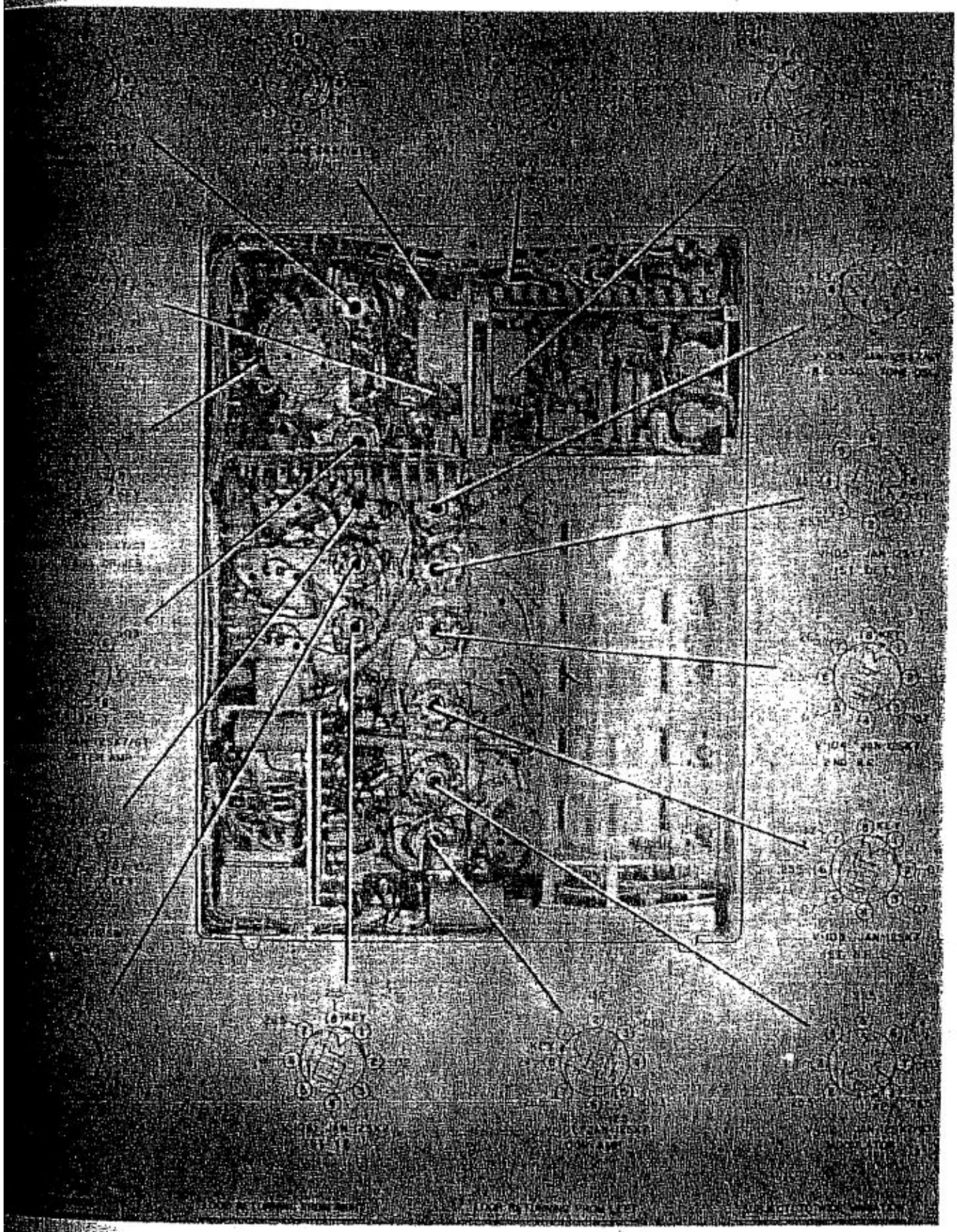

Figure 5-41. Tube Socket Voltages of Radio Compass Unit R-101, ARN-6

Table 5-7. Typical Socket Voltage Readings for Loop Control Tubes V-115 and V-116
(Measurements made with a 1,000-ohm-per-volt voltmeter)

Tube	*Socket Terminal*	*Scale*	*Loop Rotating Toward Null*		*Loop at Null*
			Clockwise	*Counterclockwise*	
V-115 JAN-2050	Heater Pin 2	DC	6.3v	6.3v	6.3v
	Plate Pin 3	DC	—20v	—30v	—56v
		*AC	52v AC	120v AC	72v AC
	Heater Pin 7	DC	0v	0v	0v
	Cathode Pin 8	DC	0.9v	0.9v	2.2v
V-116 JAN-2050	Heater Pin 2	DC	12.6v	12.6v	12.6v
	Plate Pin 3	DC	—30v	—20v	—76v
		*AC	120v AC	52v AC	72v AC
	Heater Pin 7	DC	6.3v	6.3v	6.3v
	Cathode Pin 8	DC	0.9v	0.9v	2.2v

* Use series condensor.

Direction of loop rotation is determined by viewing loop from top of glass dome. Readings taken on equipment wired for top mounting of antenna and loop.

b. RESISTANCE AND CONTINUITY MEASUREMENTS.

(1) LOOP AS-313/ARN-6, AS-313A/ARN-6, OR AS-313B/ARN-6.—Remove Plugs P-701 and P-702.

Table 5-8. Typical Resistance Readings in Loop

P-701 Terminals	*Scale Reading*		*Probable Cause for Incorrect Reading*
	Used	*Ohms*	
A to B	Direct	8.5	Open or shorted field coil B-702
A to C	Direct	8.5	Open or shorted field coil B-702
A to D	Direct	26	Open or shorted armature coil, defective brushes, B-702
E to F	R X 10	300	Low Impedance winding of motor B-701 shorted or open
G to A	R X 10	780	High Impedance winding of motor B-701 shorted or open
A, B, C, D	R X 10,000	Open	Windings of motor B-701 or wiring grounded
P-702 Terminals			
A to ground	Direct	0	Broken ground connection
A to B	Direct	.5	Open or shorted loop winding
A to C	Direct	.5	Open or shorted loop winding
B to C	Direct	.5	Open or shorted loop winding

(2) CONTROL BOX C-149/ARN-6 OR C-149A/ARN-6.—Resistance measurements are made with controls in the following positions: Function switch on "COMP.," "AUDIO" control fully clockwise, "CW-VOICE" switch on "VOICE," band switch in band III position, and "LOOP L-R" switch in neutral position. Controls are operated, as indicated in the following table, and then returned to original setting.

Table 5-9. Typical Resistance Readings in Control Box C-149/ARN-6 or C-149A/ARN-6

P-301 Terminals	*Operate and Return to Original Setting*	*Scale Used*	*Resistance (Ohms)*	*Probable Cause of Incorrect Reading*
A to ground		R x 10,000	Open	M-301
B to ground	"CW" on	R x 10,000	Open	S-306
C to ground		R x 10,000	Open	X-301
D to ground	Switch to "LOOP"	Direct	0	S-305A
E to ground	Switch to Band 1	R x 10,000	Open	S-303
F to ground	Switch to "ANT"	Direct	0	S-305A
H to ground		Direct	0	S-305A
H to ground	Switch to "ANT" or "LOOP"	Direct	7	R-302C
J to ground		R x 10,000	Open	S-305B
K to ground	Switch to Band 2	R x 10,000	Open	S-303
L to ground		R x 10,000	Open	
M to ground		R x 10,000	*10,000	J-301, R-302A, R-302,
M to ground	"AUDIO" off	R x 10	* 130	R-303, S-305A, or R-304
N to ground		R x 1,000	*10,000	J-301, R-302A, R-302B
N to ground	"AUDIO" off	R x 10	* 120	R-303, S-305A, or R-304
P to ground		Direct	0	Broken ground wire

Table 5-9. Typical Resistance Readings in Control Box C-149/ARN-6 or C-149A/ARN-6 (Continued)

P-301 Terminals	*Operate and Return to Original Setting*	*Scale Used*	*Resistance (Ohms)*	*Probable Cause of Incorrect Reading*
R to ground	Depress "CONTROL"	R x 10,000	Open	S-301
S to ground		R x 10,000	Open	S-303
T to ground		R x 10,000	Open	S-304, R-307 or S-305A
W to ground	Switch to "LOOP"	R x 10,000	Open	R-306 off center
W to ground	Switch to "LOOP" "LOOP L-R" switch at "L"	R x 10	300	R-306, or S-305A
X to ground	Switch to "LOOP"	R x 10,000	Open	R-306 off center
X to ground	Switch to "LOOP" "LOOP L-R" switch at "R"	R x 10	300	R-306 or S-305A
Y to ground	Switch to Band 4	R x 10,000	Open	S-303
L to A		R x 1,000	24,000	M-301 or R-301
L to B	"CW" on	Direct	0	S-306
L to C		Direct	6	X-301 or E-307
L to E	Switch to Band 1	Direct	0	S-303
L to J		Direct	0	S-305B
L to K	Switch to Band 2	Direct	0	S-303
L to R	Depress "CONTROL"	Direct	0	S-301
L to S		Direct	0	S-303
L to T	Switch to "LOOP"	Direct	0	S-304
L to T	Switch to "LOOP" "LOOP L-R" switch at "L" or "R"	R x 100	1,500	R-307 or S-304
L to Y	Switch to Band 4	Direct	0	S-303
M to N		Direct	* 4	J-301 or R-302A
M to N	"AUDIO" off	R x 10	* 250	J-301 or R-302A
M to N	Switch to "LOOP"	Direct	0	J-301 or S-305A
H to P	Switch to "LOOP"	R x 1,000	* 7	R-302C
H to P	"AUDIO" off Switch to "LOOP"	Direct	*35,000	R-302C

* Readings subject to wide variation due to resistor tolerance.

(2A) CONTROL PANEL C-403A/A.—Resistance measurements are made with controls in the following positions: Function switch on "COMP.," "VOLUME" control fully clockwise, "CW-VOICE" switch on "VOICE," band switch in Band III position (410-850 kc), "LOOP L-R" switch in neutral position, and "LIGHTS" switch "OFF." Controls are operated as indicated in the following table, and then returned to original setting.

Table 5-9A. Typical Resistance Readings in Control Panel C-403A/A.

Harness Terminal	*Operate and Return to Original Setting*	*Scale Used*	*Resistance (Ohms)*	*Probable Cause of Incorrect Reading*
460 to ground		R x 10,000	Open	M-101
461 to ground	"CW" on	R x 10,000	Open	S-104
462 to ground		R x 10,000	Open	I-101, I-102 or S-105
463 to ground	Switch to "LOOP"	Direct	0	S-102C
464 to ground	Switch to Band 1	R x 10,000	Open	S-101
465 to ground	Switch to "ANT."	Direct	0	S-102C
465 to ground		Direct	0	S-102C
466 to ground	Switch to "ANT." or "LOOP"	Direct	* 7	R-103C
466 to ground	"VOLUME" off and Switch to "LOOP"	R x 1,000	*35,000	R-103C
467 to ground		R x 10,000	Open	S-102B
468 to ground	Switch to Band 2	R x 10,000	Open	S-101
469 to ground		R x 10,000	Open	S-101, S-102A, S-102B, S-102F, R-101, R-107 or R-109
470 to ground		R x 10,000	*10,000	R-103A, R-103B, R-105 or S-102E
470 to ground	"VOLUME" off	R x 10	* 130	R-105, S-102E
471 to ground		R x 1,000	*10,000	R-103B, R-105, S-102E
471 to ground	"VOLUME" off	R x 10	* 130	R-103B, R-106, S-102E
472 to ground		Direct	0	Broken ground wire
473 to ground	Switch to "CONT."	R x 10,000	Open	S-102F
474 to ground		R x 10,000	Open	S-101

Table 5-9A. Typical Resistance Readings in Control Panel C-403A/A (Continued)

Harness Terminal	*Operate and Return to Original Setting*	*Scale Used*	*Resistance (Ohms)*	*Probable Cause of Incorrect Reading*
475 to ground		R x 10,000	Open	S-102A, S-103, R-108
476 to ground	Switch to "LOOP"	R x 10,000	Open	S-103 off center
476 to ground	Switch to "LOOP" and "LOOP L-R" switch at "L"	R x 10	300	S-102E or S-103
477 to ground	Switch to "LOOP"	R x 10,000	Open	S-103 off center
477 to ground	Switch to "LOOP" and "LOOP L-R" switch at "R"	R x 10	300	S-102E, or S-103
478 to ground	Switch to Band 4	R x 10,000	Open	S-101
489 to ground		Direct	*20	I-103, I-104, I-105, I-106, I-107
469 to 460		R x 1,000	24,000	M-101 or R-107
469 to 461	"CW" on	Direct	0	S-104
469 to 462		R x 10,000	Open	S-105
469 to 462	"LIGHTS" switch "HI"	Direct	*82	I-101, I-102, R-101, R-109, S-105
469 to 462	"LIGHTS" switch "LO"	Direct	*102	I-101, I-102, R-102, R-110, S-105
469 to 464	Switch to Band 1	Direct	0	S-101
469 to 467		Direct	0	S-102B*
469 to 467	Switch to "ANT.," "LOOP", or "CONT."	Direct	0	S-102B
469 to 467	Switch to "OFF"	R x 10,000	Open	S-102B
469 to 468	Switch to Band 2	Direct	0	S-101
469 to 473	Switch to "CONT."	Direct	0	S-102F
469 to 474		Direct	0	S-101
469 to 475	Switch to "LOOP" and "LOOP L-R" control at "L" or "R"	R x 10	820	R-108 or S-103
469 to 478	Switch to Band 4	Direct	0	S-101
470 to 471		Direct	*4	R-103A
470 to 471	"VOLUME" off	R x 10	*260	R-103A, R-105, or R-106
470 to 471	Switch to "ANT.," "LOOP," or "CONT."	Direct	0	S-102D

* Readings subject to wide variation due to resistor tolerance.

(2B) CONTROL PANEL C-758/A.—Resistance measurements are made with controls in following positions: Function switch on "COMP.", "VOLUME" control fully clockwise, "CW-VOICE" switch on "VOICE", bandswitch in Band III position (410-850 kc), and "LOOP L-R" switch in neutral position. Controls are operated as indicated in the following table, and then returned to original setting.

Table 5-9B. Typical Resistance Readings in Control Panel C-758/A

J-101 Terminals	*Operate and Return to Original Setting*	*Scale Used*	*Resistance (Ohms)*	*Probable Cause of Incorrect Reading*
V to ground		R x 10,000	Open	M-101
K to ground	"CW" on	R x 10,000	Open	S-104
F to ground		Direct	35	I-101, I-102, I-103, I-104, I-105
U to ground	Switch to "LOOP"	Direct	0	S-102C
Z to ground	Switch to Band I	R x 10,000	Open	S-101
C to ground	Switch to "ANT."	Direct	0	S-102C
P to ground		Direct	0	S-102C
P to ground	Switch to "ANT." or "LOOP"	Direct	*7	R-103C
P to ground	"VOLUME" off and switch to "LOOP"	R x 1,000	*35,000	R-103C
E to ground		R x 10,000	Open	S-102B
R to ground	Switch to Band II	R x 10,000	Open	S-101
G to ground		R x 10,000	Open	S-101, S-102A, S-102B, S-102F, R-107
H to ground		R x 10,000	*10,000	R-103A, R-103B, R-105, or S-102E
H to ground	"VOLUME" off	R x 10	*130	R-105, S-102E
L to ground		R x 1,000	*10,000	R-103B, R-105, S-102E
L to ground	"VOLUME" off	R x 10	*130	R-103B, R-106, S-102E
a to ground		Direct	0	Broken ground wire
Y to ground	Switch to "CONT."	R x 10,000	Open	S-102F
T to ground		R x 10,000	Open	S-101
D to ground		R x 10,000	Open	S-102A, S-103, R-108
d to ground	Switch to "LOOP"	R x 10,000	Open	S-103 off center
d to ground	Switch to "LOOP" and "LOOP L-R" switch at "L"	R x 10	300	S-102E or S-103

* Reading subject to wide variation due to resistor tolerance.

Table 5-9B. Typical Resistance Readings in Control Panel C-758/A (Continued)

J-101 Terminals	*Operate and Return to Original Setting*	*Scale Used*	*Resistance (Ohms)*	*Probable Cause of Incorrect Reading*
B to ground	Switch to "LOOP"	R x 10,000	Open	S-103 off center
B to ground	Switch to "LOOP" and "LOOP L-R" switch at "R"	R x 10	300	S-102E or S-103
A to ground	Switch to Band IV	R x 10,000	Open	S-101
G to V		R x 1,000	*23,000	M-101 or R-107
G to K	"CW" on	Direct	0	S-104
G to Z	Switch to Band I	Direct	0	S-101
G to E		Direct	0	S-102B
G to E	Switch to "ANT.", "LOOP", or "CONT."	Direct	0	S-102B
G to E	Switch to "OFF"	R x 10,000	Open	S-102B
G to R	Switch to Band II	Direct	0	S-101
G to Y	Switch to "CONT."	Direct	0	S-102F
G to T		Direct	0	S-101
G to D	Switch to "LOOP" and "LOOP L-R" control at "L" or "R"	R x 10	820	R-108 or S-103
G to A	Switch to Band IV	Direct	0	S-101
H to L		Direct	*4	R-103A
H to L	"VOLUME" off	R x 10	*260	R-103A, R-105, or R-106
H to L	Switch to "ANT.", "LOOP", or "CONT."	Direct	0	S-102D

* Reading subject to wide variation due to resistor tolerance.

(2C) CONTROL PANEL C-1514/A.—Resistance measurements are made with controls in the following positions: Function Switch on "ADF", "VOLUME" control fully clockwise, "C-W VOICE" Switch on "VOICE", band switch in Band III position (410-850 kc) and "LOOP L-R" switch in neutral position. Controls are operated as indicated in the following table, and then returned to original setting.

Table 5-9C. Typical Resistance Readings in Control Panel C-1514/A

Harness Terminal	*Original and Return to Original Setting*	*Scale Used*	*Resistance*	*Probable Cause of Incorrect Reading*
V to ground		R x 10,000	Open	S-2A, S-4, S-2B, S-1, S-2F
K to ground	CW on	R x 10,000	Open	S-4
CC to ground		R x 100	100	I-1, I-2, I-3
U to ground	Switch to "LOOP"	Direct	0	S-2C
Z to ground	Switch to band I	R x 10,000	Open	S-1
C to ground	Switch to "ANT"	Direct	0	S-2C
F to ground		Direct	0	S-2C
P to ground	Switch to "ANT" or "LOOP"	Direct	*5	R-3C
P to ground	Volume Off and Switch to "LOOP"	R x 10,000	*35,000	R-3C
E to ground		R x 10,000	Open	S-2B
R to ground	Switch to Band II	R x 10,000	Open	S-1
BB to ground		R x 10,000	Open	S-1, S-2A, S-2B, S-2F, R-1
H to ground		R x 10,000	*10,000	R-3A, R-3B, R-5, S-2E
H to ground	Volume Off	R x 100	*130	R-5, S-2E
L to ground		R x 10,000	*10,000	R-3B, R-2, S-2E
L to ground	Volume Off	R x 100	*130	R-3B, R-2, S-2E
AA to ground		Direct	0	Broken ground wire
Y to ground	Switch to "CONT"	R x 10,000	Open	S-2F
T to ground		R x 10,000	Open	S-1
D to ground		R x 10,000	Open	S-2A, S-3, R-4
DD to ground	Switch to "LOOP"	R x 10,000	Open	S-3 off center
DD to ground	Switch to "LOOP" & "LOOP L-R" at "L"	R x 100	*300	S-2E, S-3
B to ground	Switch to "LOOP"	R x 10,000	Open	S-3 off center
B to ground	Switch to "LOOP" & "LOOP L-R" at "R"	R x 100	*300	S-2E, S-3
A to ground	Switch to Band IV	R x 10,000	Open	S-1
F to ground		Direct	80	I-2, I-3
BB to V		R x 10,000	*22,000	R-1
BB to K	"CW" on	Direct	0	S-4
BB to Z	Switch to Band I	Direct	0	S-1
BB to E		Direct	0	S-2B

* Readings subject to wide variation due to resistor tolerance.

Table 5-9C. Typical Resistance Readings in Control Panel C-1514/A (Continued)

Harness Terminal	*Original and Return to Original Setting*	*Scale Used*	*Resistance*	*Probable Cause of Incorrect Reading*
BB to E	Switch to "ANT," "LOOP" or "CONT"	Direct	0	S-2B
BB to E	Switch "Off"	R x 10,000	Open	S-2B
BB to R	Switch to Band II	Direct	0	S-1
BB to Y	Switch to "CONT"	Direct	0	S-2F
BB to T		Direct	0	S-1
BB to D	Switch to "LOOP" & "LOOP L-R" at "L" or "R"	R x 100	*820	R-4, S-3
BB to A	Switch to Band IV	Direct	0	S-1
H to L		Direct	*2	R-3A
H to L	Volume Off	R x 100	*240	R-3A, R-2, R-5
H to L	Switch to "ANT," "LOOP" or "CONT"	Direct	0	S-2D

*Readings subject to wide variation due to resistor tolerance.

(3) RADIO COMPASS UNIT R-101/ARN-6 OR R-101A/ARN-6.—Resistance measurements are made with the band switch in Band III (410-850 kc) position and threshold sensitivity control, R-1101, set fully clockwise.

Table 5-10. Typical Resistance Readings in Radio Compass Unit R-101/ARN-6 or R-101-A/ARN-6

P-102 Terminals	*Scale Used*	*Reading (Ohms)*	*Probable Cause for Incorrect Reading*
A to ground	Direct	0	Broken Ground Connection
B to ground	R x 10,000	400,000 or more	C-1169, C-1170, C-1171, C-1156, C-1157, C-1158, C-1146, or C-1165
C to ground	R x 10,000	400,000 or more	Same as above
D to ground	Direct	6	C-1163, L-134, T-107, or R-113
F to ground	R x 10,000	400,000 or more	Same as B to ground
F to ground	R x 10,000	Open	C-1150A (Note condenser charge)
G to ground	Direct	2	Tubes Y-101 or L-139
H to ground	Direct	30	B-101, C-135F or S-126
J to ground	Direct	30	B-101, C-135F or S-126
K to ground	R x 10,000	Open	S-126
L to ground	Direct	30	B-101, C-135F or S-126
M to ground	Direct	9	R-101
N to ground	Direct	4	T-105B
R to ground	Direct	9	K-102
S to ground	R x 10,000	Open	
U to ground	R x 100	5,000	R-1104, R-1101, or L-138
W to ground	R x 10,000	Open	C-1143 (Note condenser charge)
X to ground	Direct	0	Broken ground connection
Z to ground	Direct	0	Broken ground connection
B to C	R x 100	1,100	T-107, R-188, R-189
B to E	R x 100	600	R-188, T-107, or L-135
C to E	R x 100	600	T-189, T-107 or L-135
G to R	Direct	7	K-102
H to L	Direct	45	B-101 or S-126
M to G	Direct	7	K-101
P-101 Terminals			
A to ground	Direct	0	Broken ground connection
B to ground	R x 10,000	Open	L-110 or wiring grounded
C to ground	R x 10,000	Open	L-110 or wiring grounded
B to C	Direct	1	L-110

(4) INDICATORS ID-90( )/ARN-6, ID-91( )/ARN-6, ID-92( )/ARN-6 AND ID-231( )/ARN-6.—Remove connector J-403.

Table 5-11. Typical Resistance Readings in Indicators ID-90/ARN-6, ID-91/ARN-6, ID-92/ARN-6, and ID-231/ARN-6

Plug Terminals	*Scale Used*	*Reading (Ohms)*	*Probable Cause for Incorrect Reading*
A, B, C or D to ground	R x 10,000	Open	Coil or wiring grounded
A to B	Direct	8.5	Open or shorted field winding
A to C	Direct	8.5	Open or shorted field winding
A to D	Direct	22	Open or shorted armature winding or defective brushes

Table 5-11A. Typical Resistance Readings in Indicators ID-90A/ARN-6, ID-91A/ARN-6, ID-92A/ARN-6, and ID-231A/ARN-6

Plug Terminals	*Scale Used*	*Reading (Ohms)*	*Probable Cause for Incorrect Reading*
A, B, C or D to ground	R x 10,000	Open	Coil or winding grounded
A to B	Direct	17	Open or shorted field winding
A to C	Direct	17	Open or shorted field winding
A to D	Direct	55	Open or shorted armature winding or defective brushes

Table 5-11B. Typical Resistance Readings in Indicators ID-91B/ARN-6, ID-231D/ARN-6, and ID-231E/ARN-6

Plug Terminals	*Scale Used*	*Reading (Ohms)*	*Probable Cause for Incorrect Reading*
A, B, C or D to ground	R x 10,000	Open	Coil or winding grounded
A to B	Direct	16.4	Open or shorted field winding
A to C	Direct	16.4	Open or shorted field winding
A to D	Direct	50	Open or shorted armature winding or defective brushes

(5) MOUNTING MT-273( )/ARN-6 AND MT-274( )/ARN-6, CONTINUITY.

Table 5-12. Mounting MT-273( )/ARN-6—Continuity

From Terminal	*To Terminal*	*Color*	*From Terminal*	*To Terminal*	*Color*
A on J-501	29 on E-501	BK	5 on Wafer 4	54 on E-501	Y-BK
B on J-501	38 on E-501	W-G	6 on Wafer 4	55 on E-501	Y
C on J-501	39 on E-501	W-BK	7 on Wafer 4	28 on E-501	Y-BK
D on J-501	22 on E-501	W-Y	12 on Wafer 4	49 on E-501	Y
E on J-501	21 on E-501	W-R	1 on Wafer 5	12 on E-501	BK-W
F on J-501	20 on E-501	W-BR	2 on Wafer 5	11 on E-501	BK-R
G on J-501	49 on E-501	Y	5 on Wafer 5	56 on E-501	BK-R
H on J-501	23 on E-501	BK-BR	6 on Wafer 5	57 on E-501	BK-W
J on J-501	24 on E-501	BK-R	7 on Wafer 5	34 on E-501	BK-R
K on J-501	25 on E-501	BK-O	12 on Wafer 5	35 on E-501	BK-W
L on J-501	26 on E-501	BK-Y	1 on Wafer 6	14 on E-501	W-BK
M on J-501	35 on E-501	BK-W	2 on Wafer 6	13 on E-501	W-G
P on J-501	32 on E-501	O	5 on Wafer 6	58 on E-501	W-G
R on J-501	34 on E-501	BK-R	6 on Wafer 6	59 on E-501	W-BK
S on J-501	41 on E-501	R-Y	7 on Wafer 6	38 on E-501	W-G
T on J-501	44 on E-501	BR	12 on Wafer 6	39 on E-501	W-BK
Y on J-501	42 on E-501	B	1 on Wafer 7	16 on E-501	B
X on J-501	2 on E-501	BK-W	2 on Wafer 7	15 on E-501	R-Y
Z on J-501	30 on E-501	BK	5 on Wafer 7	60 on E-501	R-Y
1 on Wafer 1	27 on E-501	W-R	6 on Wafer 7	61 on E-501	B
*2 on Wafer 1	*1 on E-501	Y-G	7 on Wafer 7	41 on E-501	R-Y
*5 on Wafer 1	*46 on E-501	Y-B	12 on Wafer 7	42 on E-501	B
6 on Wafer 1	45 on E-501	W-R	1 on Wafer 8	18 on E-501	BR
*7 on Wafer 1	*33 on E-501	Y-R	2 on Wafer 8	17 on E-501	O-W
12 on Wafer 1	21 on E-501	W-R	5 on Wafer 8	62 on E-501	O-W
1 on Wafer 2	6 on E-501	BK-R	6 on Wafer 8	63 on E-501	BR
2 on Wafer 2	5 on E-501	BK-BR	7 on Wafer 8	43 on E-501	O-W
5 on Wafer 2	50 on E-501	BK-BR	12 on Wafer 8	44 on E-501	BR
6 on Wafer 2	51 on E-501	BK-R	1 on Wafer 9	K-501 coil	BK
7 on Wafer 2	23 on E-501	BK-BR	2 on Wafer 9	36 on E-501	Y
12 on Wafer 2	24 on E-501	BK-R	2 on Wafer 9	K-501 coil	Y
1 on Wafer 3	8 on E-501	BK-Y	2 on Wafer 9	C-501	
2 on Wafer 3	7 on E-501	BK-O	12 on Wafer 9	30 on E-501	BK
5 on Wafer 3	52 on E-501	BK-O	12 on Wafer 9	K-501 coil	R
6 on Wafer 3	53 on E-501	BK-Y	12 on Wafer 9	Ground	BK
7 on Wafer 3	25 on E-501	BK-O	R-501	28 on E-501	
12 on Wafer 3	26 on E-501	BK-Y	R-501	30 on E-501	
1 on Wafer 4	10 on E-501	Y	29 on E-501	30 on E-501	
2 on Wafer 4	9 on E-501	Y-BK			

* Connection used only in Mounting MT-273A/ARN-6. Wired with #16 AWG wire.

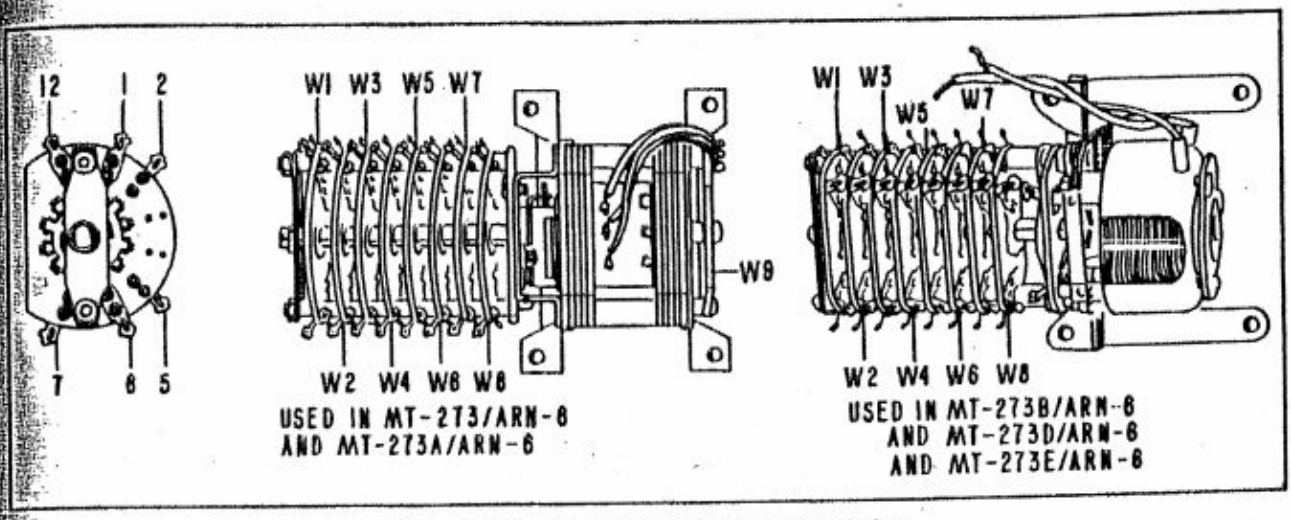

Figure 5-42. Mounting Base Stepping Relay

Table 5-13. Mounting MT-274( )/ARN-6—Continuity

From Terminal	*To Terminal*	*Color*	*From Terminal*	*To Terminal*	*Color*
A on J-501	29 on E-502	BK	5 on E-502	23 on E-502	BK-BR
B on J-501	38 on E-502	W-G	6 on E-502	24 on E-502	BK-R
C on J-501	39 on E-502	W-BK	7 on E-502	25 on E-502	BK-O
D on J-501	22 on E-502	W-Y	8 on E-502	26 on E-502	BK-Y
E on J-501	21 on E-502	W-R	9 on E-502	28 on E-502	Y-BK
F on J-501	20 on E-502	W-BR	10 on E-502	49 on E-502	Y
G on J-501	49 on E-502	Y	11 on E-502	34 on E-502	BK-R
H on J-501	23 on E-502	BK-BR	12 on E-502	35 on E-502	BK-W
J on J-501	24 on E-502	BK-R	13 on E-502	38 on E-502	W-G
K on J-501	25 on E-502	BK-O	14 on E-502	39 on E-502	W-BK
L on J-501	26 on E-502	BK-Y	15 on E-502	41 on E-502	R-Y
M on J-501	35 on E-502	BK-W	16 on E-502	42 on E-502	B
P on J-501	32 on E-502	O	17 on E-502	43 on E-502	O-W
R on J-501	34 on E-502	BK-R	18 on E-502	44 on E-502	BR
S on J-501	41 on E-502	R-Y	21 on E-502	27 on E-502	W-R
U on J-501	44 on E-502	BR	29 on E-502	30 on E-502	
W on J-501	42 on E-502	B	R-501	30 on E-502	
X on J-501	2 on E-502	BK-W	R-501	28 on E-502	
Z on J-501	30 on E-502	BK			

NOTE: Wired with #16 AWG wire.

c. TUBE CURRENT MEASUREMENTS.—Current measurements were made with a 1,000-ohm-per-volt voltmeter. When socket pin 1 is used for a grid connection instead of shell connection, it is necessary to run a jumper wire from pin 1 on the receiver tube socket, to the flexible pin tip connection on the analyzer octal tube adapter. This flexible pin lead is connected to pin 1 of the tube. The jumper wire is necessary when measuring currents for tubes V-102, V-109, V-110, V-111, V-112, and V-113.

Table 5-14. Typical Current Readings, Loop Control Tubes V-115 and V-116

Tube	*Circuit*	*Scale*	*Loop Rotating Toward Null*		*Loop at Null*
			Clockwise	*Counterclockwise*	
V-115 JAN-2050	Plate	25 ma DC	19 ma	0	23 ma
	Cathode	25 ma DC	19 ma	0	23 ma
	Heater	1000 ma DC	600 ma	600 ma	600 ma
V-116 JAN-2050	Plate	25 ma DC	0 ma	19 ma	23 ma
	Cathode	25 ma DC	0 ma	19 ma	23 ma
	Heater	1000 ma DC	600 ma	600 ma	600 ma

Table 5-15—Typical Tube Current Measurements (Radio Compass Unit R-101/ARN-6)

Tube Type: JAN	*V-101 12SK7*	*V-102 12SX7-GT*	*V-103 12SK7*	*V-104 12SK7*	*V-105 12SY7*	*V-106 12SK7*	*V-107 12SK7*	*V-108 12SW7*	*V-109 12SX7-GT*	*V-110 12SX7-GT*	*V-111, V-112 26A7-GT*	*V-113 12SX7-GT*	*V-114 12SK7*
Pin 1	Shell	Grid "B"	Shell	Shell	Suppressor	Shell	Shell	Shell	Grid "B"	Grid "B"	Grid	Grid "B"	Shell
Scale		1 ma			1 ma				1 ma	1 ma	1 ma	1 ma	
Reading	—	0	—	—	0	—	—		0.2	0	0	0	—
Pin 3	Suppressor	Cathode "B"	Suppressor	Suppressor	Plate	Suppressor	Suppressor	Cathode	Cathode "B"	Cathode "B"	Grid	Cathode "B"	Suppressor
Scale	1 ma	1 ma	1 ma	1 ma	1 ma	1 ma	1 ma	1 ma	2.5 ma	1 ma	1 ma	1 ma	1 ma
Reading	0	0.2 0.73 "L"	0	0	.42	0	0	0.2	1.5	0.25	0	0	0
Pin 4	Grid	Grid "A"	Grid	Grid	Screen	Grid	Grid	Diode Pl.	Grid "A"	Grid "A"	Plate	Grid "A"	Grid
Scale	1 ma	1 ma	1 ma	1 ma	2.5 ma	1 ma	1 ma	1 ma	1 ma	1 ma	100 ma	1 ma	1 ma
Reading	0	0	0	0	1.8	0	0	0	0	0	40 to 50	0	0
Pin 5	Cathode	Plate "A"	Cathode	Cathode	Grid, Inj.	Cathode	Cathode	Diode Pl.	Plate "A"	Plate "A"	Screen	Plate "A"	Cathode
Scale	2.5 ma	1 ma	2.5 ma	2.5 ma	1 ma	2.5 ma	2.5 ma	1 ma	2.5 ma	1 ma	25 ma	1 ma	2.5 ma
Reading	2	0.2 0 "L"	1.65	1.65	0	2.0 0.55 "L"	1	0	1.3	0.8	5 to 8	.7 "L"	1.15
Pin 6	Screen	Cathode "A"	Screen	Screen	Cathode	Screen	Screen	Plate	Cathode "A"	Cathode "A"	Heater	Cathode "A"	Screen
Scale	1 ma	1 ma	1 ma	1 ma	5 ma	1 ma	1 ma	1 ma	2.5 ma	1 ma	1000 ma	1 ma	1 ma
Reading	0.5	0.2 0 "L"	0.4	0.4	2.5	0.53 0.14 "L"	0.25	0.2	1	0.8	600	0.25 .7 "L"	0.3
Pin 8	Plate	Heater	Plate	Plate	Grid, Sig.	Plate	Plate	Heater	Heater	Heater	Plate	Heater	Plate
Scale	2.5 ma	500 ma	2.5 ma	2.5 ma	1 ma	2.5 ma	1 ma	250 ma	500 ma	500 ma	100 ma	500 ma	1 ma
Reading	1.5	300	1.25	1.25	0	1.5 0.41 "L"	0.75	150	300	300	40 to 50	300	0.85

NOTES:

Readings followed by "L" are taken with function switch in "LOOP" position. All readings are in milliamperes.

Table 5-16—Typical Tube Current Measurements (Radio Compass Unit R-101/ARN-6)

Type: JAN Tube	*V-101 12SK7*	*V-102 12SX7-GT*	*V-103 12SK7*	*V-104 12SK7*	*V-105 12SY7*	*V-106 12SK7*	*V-107 12SK7*	*V-108 12SW7*	*V-109 12SX7-GT*	*V-110 12SX7-GT*	*V-111, V-112, 26A7-GT*	*V-113 12SX7-GT*	*V-114 12SK7*
Pin 1	Shell	Grid "B"	Shell	Shell	Suppressor	Shell	Shell	Shell	Grid "B"	Grid "A"	Grid	Grid "A"	Shell
Scale	—	1 ma			1 ma				1 ma	1 ma	1 ma	1 ma	
Reading	—	0	—	—	0		—	—	0.2	0	0	0	—
Pin 3	Suppressor	Cathode "B"	Suppressor	Suppressor	Plate	Suppressor	Suppressor	Cathode	Cathode "B"	Cathode "A"	Grid	Cathode "A"	Suppressor
Scale	1 ma	1 ma	1 ma	1 ma	1 ma	1 ma	1 ma	1 ma	2.5 ma	1 ma	1 ma	1 ma	1 ma
Reading	0	0.2 0.73 "L"	0	0	.42	0	0	0.2	1.5	0.7 "L"	0	0	0
Pin 4	Grid	Grid "A"	Grid	Grid	Screen	Grid	Grid	Diode Pl.	Grid "A"	Grid "B"	Plate	Grid "B"	Grid
Scale	1 ma	1 ma	1 ma	1 ma	2.5 ma	1 ma	1 ma	1 ma	1 ma	1 ma	100 ma	1 ma	1 ma
Reading	0	0	0	0	1.8	0	0	0	0	0	40 to 50	0	0
Pin 5	Cathode	Plate "A"	Cathode	Cathode	Grid. Inj.	Cathode	Cathode	Diode Pl.	Plate "A"	Plate "B"	Screen	Plate "B"	Cathode
Scale	2.5 ma	1 ma	2.5 ma	2.5 ma	1 ma	2.5 ma	2.5 ma	1 ma	2.5 ma	1 ma	25 ma	1 ma	2.5 ma
Reading	2	0.2 0 "L"	1.65	1.65	0	2.0 0.55 "L"	1	0	1.3	0.8	5 to 8	0.25	1.15
Pin 6	Screen	Cathode "A"	Screen	Screen	Cathode	Screen	Screen	Plate	Cathode "A"	Cathode "B"	Heater	Cathode "B"	Screen
Scale	1 ma	1 ma	1 ma	1 ma	5 ma	1 ma	1 ma	1 ma	2.5 ma	1 ma	1000 ma	1 ma	1 ma
Reading	0.5	0.2 0 "L"	0.4	0.4	2.5	0.53 0.14 "L"	0.25	0.2	1	0.8	600	0.25	0.3
Pin 8	Plate	Heater	Plate	Plate	Grid, sig.	Plate	Plate	Heater	Heater	Heater	Plate	Heater	Plate
Scale	2.5 ma	500 ma	2.5 ma	2.5 ma	1 ma	2.5 ma	1 ma	250 ma	500 ma	500 ma	100 ma	500 ma	1 ma
Reading	1.5	300	1.25	1.25	0	1.5 0.41 "L"	0.75	150	300	300	40 to 50	300	0.85

NOTES:

Readings followed by "L" are taken with function switch in "LOOP" position. All readings are in milliamperes.

d. COIL MEASUREMENTS.—Measurements for both audio and radio frequency coils are given in tables 5-17 and 5-18. Coil Q-measurements are made with iron cores at a definite setting. When measuring RF coils first turn core adjusting screws clockwise to the stops and then back out the number of turns as indicated in the table. The IF coil core adjusting screws are turned counterclockwise to the stops and then turned in the number of turns indicated in the chart.

Table 5-17—Coil Measurements (Radio Compass Unit R-101/ARN-6)

Ref. No.	*Part of Ref. No.*	*Winding*	*Terminals*		*Ohms, (DC)*	*Inductance at 1 kc*	*Q-meter measurements*			*Iron core settings, for stated Q-meter reading*	*Coils in or out of shield can*	*Remarks*
			Connect to	*Join*			*Freq. Kc.*	*Q*	*Resonating capacity, mmf*			
L-107A		Tone Osc. Trans.	3-5		86	.3 hy						
		(4 is C.T.)	3-4		36	.06 hy						
			4-5		50	.095 hy						
L-107B		Choke	1-2		10	.55 hy						
L-108		(4 is C.T.)	1-2		4.5	.09 hy						
L-109		Secondary	4-1		29	7,210 μh	100	32	442	2-1/2 to 5 turns out	Out	Secondary Q-meter measurements taken with primary connected to loop through 6-foot Cord CG-131/ARN-6.
		Primary	7-6		0.425	15.5 μh						
		Sec. + Pri.	4-7	1 to 6	29.4	7,735 μh	100	107	307.5			
L-110	L-101	Secondary	4-1		3.2	480 μh	410	65	439	2-1/2 to 5 turns out	Out	(Same as L-109)
		Primary	7-6		0.47	18 μh						
		Sec. + Pri.	4-7	1 to 6	3.7	628 μh	400	201	227			
L-111	L-101	Secondary	4-1		6.5	1,915 μh	200	49	438	2-1/2 to 5 turns out	Out	(Same as L-109)
		Primary	7-6		0.47	18 μh						
		Sec. + Pri.	4-7	1 to 6	7	2,250 μh	200	182	268			
L-112	L-101	Secondary	4-1		1.5	113 μh	850	70	427	2-1/2 to 5 turns out	Out	(Same as L-109)
		Primary	7-6		0.47	18 μh						
		Sec. + Pri.	4-7	1 to 6	2	210 μh	800	78	187			
L-113	L-102	Shunt	1-6		400	0.2 hy	50	50			In	
L-114	L-102	Series		(see remarks)	7.5	122 μh	1,750	42			In	If C-115 is shorted, can be measured at terminals 5 and 6.
L-115	Z-101	If wave trap		(see remarks)	137	26,000 μh	142.5	50		3 turns in	In	Short C-121; measure from terminals 1 and 7; switch wafer in band 3 position.
L-116	L-103	Secondary	2-1		27	5,900 μh	100	82	450		Out	Secondary Q-meter measurements taken with primary shunted with 175 mmf, and also 15 mmf coupling capacitor between terminals 2 and 3, and terminal 4 grounded.
		Primary	3-4		158	50,200 μh	52.5	44	175			
		Sec. + Pri.	2-3	1 to 4	185	65,700 μh	50	47	147			
		Tertiary	6-5		1.5	10 μh						
L-117	L-103	Secondary	2-1		2.8	360 μh	410	150	452		Out	(Same as L-116)
		Primary	3-4		28	2,750 μh	226	82	175			
		Sec. + Pri.	2-3	1 to 4	31	3,600 μh	175	87	224			
		Tertiary	6-5		3.9	70 μh						
L-118	L-103	Secondary	2-1		5.3	1,480 μh	200	154	445		Out	Secondary Q-meter measurements taken with primary shunted with 175 mmf, and with 10 mmf coupling between terminals 2 and 3; terminal 4 grounded.
		Primary	3-4		94	19,700 μh	84.5	58	175			
		Sec. + Pri.	2-3	1 to 4	99	24,200 μh	75	58	180			
		Tertiary	6-5		2.8	36 μh						

Table 5-17—Coil Measurements (Radio Compass Unit R-101 ARN-6) (Continued)

Ref. No.	Part of Ref. No.	Winding	Terminals: Connect to	Terminals: Join	Ohms, (DC)	Inductance at 1 kc	Q-meter measurements: Freq. Kc.	Q-meter measurements: Q	Q-meter measurements: Resonating capacity, mmf	Iron Core settings, for stated Q-meter Reading	Coils in or out of shield can	Remarks
L-119	L-103	Secondary	2-1		1.7	85 μh	850	116	460		Out	(Same as L-118)
		Primary	3-4		12	723 μh	450	74	175			
		Sec. +Pri.	2-3	1 to 4	14	900 μh	350	80	222			
		Tertiary	6-5		4.7	103 μh						
L-120	L-104	Secondary	4-1		33	5,200 μh	100	78	454	2-1/2 to 5 turns out	Out	Secondary Q-meter measurements taken with primary shunted with 500 mmf.
		Primary	6-7		160	44,500 μh	50	33	227			
		Sec. + Pri.	4-6	1 to 7	193	55,000 μh	50	33	171			
L-121	L-104	Secondary	4-1		2.5	348 μh	410	208	444	2-1/2 to 5 turns out	Out	(Same as L-120)
		Primary	6-7		94	18,150 μh	75	44	250			
		Sec. + Pri.	4-6	1 to 7	96.5	19,250 μh	75	42	232			
L-122	L-104	Secondary	4-1		5.1	1,415 μh	200	208	443	2-1/2 to 5 turns out	Out	(Same as L-120)
		Primary	6-7		160	43,000 μh	50	33	240			
		Sec. + Pri.	4-6	1 to 7	165	46,500 μh	50	32	217			
L-123	L-104	Secondary	4-1		1.54	80 μh	850	167	450	2-1/2 to 5 turns out	Out	(Same as L-120)
		Primary	6-7		64	8,260 μh	100	38	307			
		Sec. + Pri.	4-6	1 to 7	65.5	8,570 μh	100	37	295			
L-124	L-105	Same as L-120										
L-125	L-105	Same as L-121										
L-126	L-105	Same as L-122										
L-127	L-105	Same as L-123										
L-128	L-106	Secondary	5-4		1.74	187 μh	600	50	380	2-1/2 to 5 turns out	Out	
		Primary	7-6		3.2	53 μh	1,200	43	325			
		Sec. + Pri.	5-7	4 to 6	4.9	343 μh	600	59	209			
L-129	L-106	Secondary	5-4		1.9	217 μh	600	50	318	2-1/2 to 5 turns out	Out	
		Primary	7-6		2.7	40 μh	1,200	43	422			
		Sec. + Pri.	5-7	4 to 6	4.6	347 μh	600	59	198			
L-130	L-106	Secondary	4-5		3.5	630 μh	350	57	329	2-1/2 to 5 turns out	Out	
		Primary	7-6		4.5	112 μh	700	45	441			
		Sec. + Pri.	5-7	4 to 6	8	1,010 μh	350	50	209			
L-131	L-106	Secondary	5-4		0.95	63 μh	1,000	51	394	2-1/2 to 5 turns out	Out	
		Primary	7-6		1.9	22 μh	2,000	51	340			
		Sec. + Pri.	5-7	4 to 6	2.9	113 μh	1,000	62	218			
T-105A		Primary	1-2		430	10 hy						
		Secondary	3-4		380	5.2 hy						
			3-can		100,000							
T-105B		Primary	5-7		15	1 hy						
			5-6		7	.275 hy						
			6-7		8	.275 hy						
		Secondary	8-can		3.5	.135 hy						

Table 5-17—Coil Measurements (Radio Compass Unit R-101/ARN-6) (Continued)

Ref. No.	Part of Ref. No.	Winding	Terminals: Connect to	Terminals: Join	Ohms, (DC)	Inductance at 1 kc	Q-meter measurements: Freq. Kc.	Q-meter measurements: Q	Q-meter measurements: Resonating capacity, mmf	Iron Core settings, for stated Q-meter Reading	Coils in or out of shield can	Remarks
T-106A		Interstage trans.	1-3		3,250							Inductance cannot be determined, because of internal capacitors.
		(2 is C.T.)	1-2		550							
			2-3		2,700							
T-106B		Primary	4-5		1,100							Inductance cannot be determined, because of internal capacitors.
		Secondary	1-6		2,200							
T-107		Primary	1-3		2.3	0.15 hy						
			1-2		1.1	0.04 hy						
			2-3		1.2	0.04 hy						
		Secondary #1	4-6		125	2 hy						
			4-5		62	0.65 hy						
			5-6		63	0.65 hy						
		Secondary #2	7-9		4.5	0.27 hy						
			7-8		1.7	0.045 hy						
T-108	T-101	Secondary	4-3		10	560 μh	455	90		2-1/2 turns in	In	Switch in Band 1 position. For tertiary, see figure 8-11; resistance, and 1,000-cycle inductance measured from terminal No. 1 to outer connection of C-169. For Q-measurements disconnect internal components from circuit.
		Tertiary (link)		(see remarks)	12.5	555 μh	455	75				
		Primary	7-8		9.2	560 μh	455	90		2 turns in		
T-109	T-101	Secondary	4-3		45	3,800 μh	142.5	52		2-1/2 turns in	In	Switch in Band 3 position. For tertiary, see figure 8-11; resistance, and 1,000-cycle inductance measured from terminal No. 1 to outer connection of C-178. For Q-measurements, disconnect internal components from circuit.
		Tertiary (link)		(see remarks)	54	3,820 μh	142.5	48				
		Primary	7-8		43	3,800 μh	142.5	52		2 turns in		
T-110	T-102	Same as T-108										
T-111	T-102	Same as T-109								3 turns in	In	Switch in Band 1 position. For Q-measurements disconnect C-197 and C-1101.
T-112	T-103	Secondary	3-4		10	630 μh	455	90				
		Primary	6-8		15	1,020 μh	455	95		16 turns in		
		Pri. start to tap	7-8		6.6	265 μh						
T-113	T-103	Secondary	3-4		38	3,550 μh	142.5	52		3-1/2 turns in	In	Switch in Band 3 position. For Q-measurements disconnect C-196 and C-198.
		Primary	6-8		44	4,050 μh	142.5	54		20 turns in		
		Pri. start to tap	7-8		19	1,020 μh						
T-115	T-104		1-4		12.5	560 μh	455	63		3 turns in	In	Switch in Band 1 position. Short out R-160, and, for Q-measurements, disconnect C-1128 and C-1130.
		Start to tap	3-4	(see remarks)	11.5	510 μh						
T-116	T-104		1-4		35	3,250 μh	142.5	43		3 turns in	In	Switch in Band 3 position. Short out R-160, and, for Q-measurements, disconnect C-1129 and C-1130.
		Start to tap	3-4	(see remarks)	32	2,875 μh						
T-119		Primary portion	1-2		1,400	40 hy						
		Sec. portion:										
		Start to CT	3-1		1,050	35 hy						
		CT to fin.	1-5		1,300	35 hy						
		Entire wdg.	3-2		2,450	(over 100 hy)						
Y-102		Vibrator coil	4-7		135							

Table 5-18—Coil Measurements (Radio Compass Unit R-101A/ARN-6)

Ref. No.	Part of Ref. No.	Winding	Terminals: Connect to	Terminals: Join	Ohms, (DC)	Inductance at 1 kc	Q-meter measurements: Freq. Kc.	Q-meter measurements: Q	Q-meter measurements: Resonating capacity, mmf	Iron Core settings, for stated Q-meter Reading	Coils in or out of shield can	Remarks
L-107A		Tone Osc. Trans.	3-5		80	.3 hy						
L-107B		Choke	1-2		10	.55 hy						
L-108			1-2		4.5	.09 hy						
L-109	L-101	Secondary	4-1		29	68,000 μh	100	32	452	2-1/2 to 5 turns out	Out	Secondary Q-meter measurements taken with primary connected to loop through 6-foot Cord CG-131/ARN-6.
		Primary	7-6		0.4	12 μh						
		Sec. + Pri.	4-7	1 to 6	29.4	7,400 μh						
L-110	L-101	Secondary	4-1		3.2	450 μh	410	65	439	2-1/2 to 5 turns out	Out	(Same as L-109)
		Primary	7-6		0.4	16 μh						
		Sec. +Pri.	4-7	1 to 6	3.7	615 μh						
L-111	L-101	Secondary	4-1		6.5	1,850 μh	200	46	438	2-1/2 to 5 turns out	Out	(Same as L-109)
		Primary	7-6		0.44	15 μh						
		Sec. + Pri.	4-7	1 to 6	7	2,160 μh						
L-112	L-101	Secondary	4-1		1.5	110 μh	850	66	427	2-1/2 to 5 turns out	Out	(Same as L-109)
		Primary	7-6		0.44	17 μh						
		Sec. + Pri.	4-7	1 to 6	2	205 μh						
L-113	L-102	Shunt	1-6		400	0.2 hy	50	50			In	
L-114	L-102	Series		(see remarks)	7.5	122 μh	1,750	42			In	If C-115 is shorted, can be measured at terminals 5 and 6.
L-115	Z-101	I-F wave trap		(see remarks)	137	26,000 μh	142.5	50		3 turns in	In	Short C-121; measure from terminals 1 and 7; switch wafer in band 3 position.
L-116	L-103	Secondary	2-1		27	5,950 μh	100	100	450		Out	Secondary Q-meter measurements taken with primary shunted with 230 mmf.
		Primary	3-4		158	56,000 μh	50	44	230			
		Tertiary	6-5		1	6 μh						
L-117	L-103	Secondary	2-1		2.8	345 μh	410	170	452		Out	(Same as L-116)
		Primary	3-4		28	2,750 μh	200	65	230			
		Tertiary	6-5		2.6	55 μh						
L-118	L-103	Secondary	2-1		5.3	1,480 μh	200	160	445		Out	Secondary Q-meter measurements taken with primary shunted with 230 mmf.
		Primary	3-4		94	17,000 μh	80	50	230			
		Tertiary	6-5		.7	26 μh						
L-119	L-103	Secondary	2-1		1.5	82 μh	850	155	460		Out	(Same as L-118)
		Primary	3-4		7.2	620 μh	423	80	230			
		Tertiary	6-5		3	90 μh						
L-120	L-104	Secondary	4-1		42	5,400 μh	100	65	454	2-1/2 to 5 turns out	Out	Secondary Q-meter measurements taken with primary shunted with 230 mmf.
		Primary	6-7		162	44,500 μh	50	28	230			
L-121	L-104	Secondary	4-1		2.5	335 μh	410	190	444	2-1/2 to 5 turns out	Out	(Same as L-120) except Secondary Q-meter measurements with 93 mmf.
		Primary	6-7		94	18,000 μh	120	45	93			
L-122	L-104	Secondary	4-1		5.1	1,400 μh	200	190	443	2-1/2 to 5 turns out	Out	(Same as L-120) except pri shunt 185 mmf.
		Primary	6-7		160	42,000 μh	57	30	185			
L-123	L-104	Secondary	4-1		1.54	76.5 μh	850	100	450	2-1/2 to 5 turns out	Out	(Same as L-120) except pri shunt with 40 mmf in series with 12K ohms.
		Primary	6-7		64	8,300 μh	260	47	40			

Table 5-18—Coil Measurements (Radio Compass Unit R-101A/ARN-6) (Continued)

Ref. No.	Part of Ref. No.	Winding	Terminals: Connect to	Terminals: Join	Ohms, (DC)	Inductance at 1 kc	Q-meter measurements: Freq. Kc.	Q-meter measurements: Q	Q-meter measurements: Resonating capacity, mmf	Iron Core settings, for stated Q-meter Reading	Coils in or out of shield can	Remarks
L-124	L-105	Same as L-120										
L-125	L-105	Same as L-121										
L-126	L-105	Same as L-122										
L-127	L-105	Same as L-123										
L-128	L-106	Secondary	5-4		1.74	180 μh	600	55	380	2-1/2 to 5 turns out	Out	
		Primary	7-6		3.2	53 μh	1,200	45	315			
L-129	L-106	Secondary	5-4		1.9	215 μh	600	51	318	2-1/2 to 5 turns out	Out	
		Primary	7-6		1.6	42 μh	1,200	42	410			
L-130	L-106	Secondary	4-5		3.5	600 μh	350	59	329	2-1/2 to 5 turns out	Out	
		Primary	7-6		4.5	115 μh	700	45	440			
L-131	L-106	Secondary	5-4		0.95	63 μh	1,000	52	394	2-1/2 to 5 turns out	Out	
		Primary	7-6		1.9	22 μh	2,000	47	300			
T-105A		Primary	1-2		430	10 hy						
		Secondary	3-4		380	5.2 hy						
			3-can		100,000							
T-105B		Primary	5-7		15	1 hy						
			5-6		7	.275 hy						
			6-7		8	.275 hy						
		Secondary	8-can		3.5	.135 hy						
T-106A		Interstage trans. (2 is C.T.)	1-3		3,250							Inductance cannot be determined, because of internal capacitors.
			1-2		550							
			2-3		2,700							
T-106B		Primary	4-5		1,100							Inductance cannot be determined, because of internal capacitors.
		Secondary	1-6		2,200							
T-107		Primary	1-3		1.9	0.15 hy						
			1-2		1.1	0.04 hy						
			2-3		1.2	0.04 hy						
		Secondary #1	4-6		125	2 hy						
			4-5		62	0.65 hy						
			5-6		63	0.65 hy						
		Secondary #2	7-9		4.5	0.27 hy						
			7-8		1.7	0.045 hy						
T-108		Secondary	4-3		8.5	490 μh	455	90		2-1/2 turns in	In	Switch in Band 1 position. For tertiary, see figure 8-11 resistance, and 1,000-cycle inductance measured from terminal No. 1 to outer connection of C-169. For Q-measurements disconnect internal components from circuit.
		Tertiary (link)		(see remarks)	10.9	490 μh	455	75				
		Primary	7-8		8.5	490 μh	455	90		2 turns in		
T-109	T-101	Secondary	4-3		45	3,600 μh	142.5	52		2-1/2 turns in	In	Switch in Band 3 position. For tertiary, see figure 8-11 resistance, and 1,000-cycle inductance measured from terminal No. 1 to outer connection of C-178. For Q-measurements, disconnect internal components from circuit.
		Tertiary (link)		(see remarks)	54	3,700 μh	142.5	48				
		Primary	7-8		43	3,600 μh	142.5	52		2 turns in		

Table 5-18—Coil Measurements (Radio Compass Unit R-101A/ARN-6) (Continued)

Ref. No.	Part of Ref. No.	Winding	Terminals: Connect to	Terminals: Join	Ohms, (DC)	Inductance at 1 kc	Q-meter measurements: Freq. Kc.	Q-meter measurements: Q	Q-meter measurements: Resonating capacity, mmf	Iron Core settings, for stated Q-meter Reading	Coils in or out of shield can	Remarks
T-110	T-102	Same as T-108										
T-111	T-102	Same as T-109										
T-112	T-103	Secondary	3-4		10	630 μh	455	90		3 turns in	In	Switch in Band 1 position. For Q-measurements disconnect C-197 and C-1101.
		Primary	6-8		15	1,020 μh	455	95		16 turns in		
T-113	T-103	Secondary	3-4		34	3,550 μh	142.5	52		3-1/2 turns in	In	Switch in Band 3 position. For Q-measurements disconnect C-196 and C-198.
		Primary	6-8		43	4,050 μh	142.5	54		20 turns in		
T-115	T-104		1-4		12.5	560 μh	455	63		3 turns in	In	Switch in Band 1 position. Short cut R-160, and for Q-measurements, disconnect C-1128 and C-1130.
T-116	T-104		1-4		35	3,250 μh	142.5	43		3 turns in	In	Switch in Band 3 position. Short cut R-160, and for Q-measurements, disconnect C-1129 and C-1130.
T-119		Primary portion	1-2		1,400	40 hy						
		Sec. portion:										
		Start to CT	3-1		1,050	35 hy						
		CT to fin.	1-5		1,300	35 hy						
		Entire wdg.	3-2		2,500	(over 100 hy)						
Y-102		Vibrator coil	4-7		135							

9. OVERALL PERFORMANCE TESTS.

a. GENERAL.—If at any time the operation of the equipment is questionable, measure the performance according to the following procedure. After making any major repairs or adjustments, remeasure the performance to be sure the adjustments have been properly made. The results of these measurements should conform to the normal performance characteristics shown in table 6-5 or 6-6, but in no case should be worse than the minimum requirements, which are shown in table 6-5.

b. STANDARD TEST CONDITIONS.—All individual performance tests are made under the following conditions unless otherwise specified.

(1) Power Supply—26.5 volts DC, measured at terminals 30 and 31 of the terminal board in the receiver mounting.

(2) Warm-up Period—Receiver should be turned on 20 minutes before performing any of the tests.

(3) Dummy Antenna—50 micromicrofarad series capacitance, connected to Coupling Unit CU-65/ARN-6, thence to receiver through the usual cable. (If for any reason an antenna lead-in cable is not available for test purposes, a 100-micromicrofarad capacitor from antenna connection to ground will simulate it satisfactorily.)

For tests involving loop or compass operation there is the added specification that the antenna must be 0.25-meter effective height. This is determined from the constants of the test cage.

(4) Standard Signal Modulation—400 cycles, 30 per cent.

(5) Receiver Conditions—Operation is normally at "ANTENNA" and with "CW-VOICE" switch at "VOICE."

(6) Standard Output—50-milliwatts audio into a 300-ohm load. Ordinarily, the load will be a standard output meter, plugged into the active control box. The 300-ohm load can, if necessary, be made by connecting two pairs of Headsets HS-33 in parallel. (See end of paragraph (7) following.)

(7) Signal-to-noise ratio—4:1 in power, 2:1 in voltage. The noise output is 12.5 milliwatts when the combined noise and modulation output is 50 milliwatts.

The procedure used in obtaining this result is first to set the signal generator to give a modulated signal of rather low level. Tune receiver carefully to resonance. Switch off the modulation, leaving the carrier. Adjust the "AUDIO" control to give 12.5 milliwatts output, representing noise. Turn on the modulation and adjust signal generator voltage to give 50 milliwatts combined noise and modulation. Repeat adjustments alternately until no further change is required.

For information, with a 300-ohm load, 1.94 volts corresponds to 12.5 milliwatts, and 3.87 volts to 50 milliwatts; measure with a vacuum tube voltmeter.

c. METHODS OF MEASUREMENT.—In performance tests, make each measurement as follows, under the conditions of paragraph *b.* above.

(1) ANTENNA SENSITIVITY.—Apply standard modulated signal to antenna connection through the dummy antenna. Set signal generator to test frequency and make adjustments for standard signal-to-noise ratio. The required signal voltage represents the sensitivity at that particular test frequency.

(2) ANTENNA NOISE LEVEL.—Disconnect the signal generator, and ground the 50-micromicrofarad dummy antenna, so that capacitor is connected from the antenna post to the frame of Coupling Unit CU-65/ARN-6. Including the capacity of the cable, this puts 150 micromicrofarads across the antenna connector J-101. Shield dummy antenna and receiver thoroughly. Set "AUDIO" control fully clockwise. Tune equipment throughout complete range. The highest output reading in each band is the antenna noise level.

After this test has been made, repeat with "AUDIO" control in counterclockwise, or minimum, position. If the noise level exceeds .050 milliwatts at any tuning setting, trouble is indicated in filtering, or second detector and audio circuits.

(3) LOOP SENSITIVITY.—See that loop is mounted in proper position in test cage, to fulfill antenna requirements. Set function switch to "LOOP." Adjust signal generator and "AUDIO" control for standard signal-to-noise ratio. The field strength at the center of the loop, as computed from the test cage constants, expresses the loop sensitivity.

(4) LOOP NOISE LEVEL.—Shield the loop and receiver thoroughly. Set function switch to "LOOP," and "AUDIO" control at maximum. Tune the equipment throughout complete range. The highest reading in each band is the loop noise level.

(5) INTERMEDIATE-FREQUENCY REJECTION RATIO.—Adjust for standard signal-to-noise ratio. Leave the "AUDIO" control at this setting, and retune the signal generator to the point of maximum response in the vicinity of the intermediate frequency (455 kc on band 1—100 to 200 kc; 142.5 kc on bands 2, 3, and 4—200 to 1750 kc.) Increase the signal until 50-milliwatt output is obtained. The ratio of the signal generator output at the intermediate frequency to that at the test frequency, for 50-milliwatt output, is the rejection ratio.

Note

The harmonics of the signal will appear in the frequency range of the equipment. To avoid response from harmonics, select a test frequency removed from the harmonics by at least 20 kilocycles.

(6) IMAGE REJECTION RATIO.—Adjust for standard signal-to-noise ratio, at test frequency. Then, without readjusting the receiver, retune the signal generator higher than the test frequency by twice the intermediate frequency (910 kc higher on band 1—100 to 200 kc; 285 kc higher on bands 2, 3, and 4—200 to

1750 kc.) Increase signal until 50-milliwatt output is obtained. The required signal should not be less than the value in the tables.

(7) COMPASS ACCURACY (SENSITIVITY AND SPEED OF TAKING BEARING).—See that the loop is mounted in proper position in the test cage to fulfill antenna requirements. Receiver is to be operated on "COMP-ADF." Apply a signal of specified frequency and intensity. The accuracy is measured by displacing the loop about 5 degrees from the equilibrium position, and permitting it to return by compass action. This test should be repeated on each side of the equilibrium position. (The loop may be displaced by turning the function switch to "LOOP," operating the "LOOP L-R" control, and, when ready to read, returning the function switch to "COMP-ADF.")

The speed of taking bearings is measured similarly. The loop is displaced 175 degrees either side of equilibrium, and the time of return noted. The field strength should be 25 microvolts per meter for this measurement.

(8) HUNTING.—Operate receiver on "COMP-ADF." With a strong signal there should be no hunting if the loop feedback control is properly adjusted; there may be overshooting—once in each direction—before the loop comes to rest. When the signal is weak, internal noise may cause some hunting, or wavering, around the equilibrium point. The maximum value of this hunting is given in the tables.

(9) AVC ACTION.—Operate receiver on "ANT." The applied signal should be modulated, and at the frequency specified in the table. The "AUDIO" control is set at maximum, and the output read in the standard manner. The tables give output milliwatts as a function of microvolts input signal strength.

(10) ANTENNA SELECTIVITY.—For this test, two points are taken—one for each intermediate frequency. Proceed at first as in making observations for Antenna Sensitivity, paragraph (1) above. When the antenna sensitivity has been found for a test-point, increase the signal input by the factor in the table, indicated as "X" resonant input. Do not touch the receiver, but tune the signal generator to points on each side of the resonant frequency where the output of the receiver drops to the standard value again. The difference in frequency between the two points is the band width, for a given level. Repeat the test for the several output levels, and for the other test frequency.

10. EQUIPMENT REQUIRED FOR TESTING AND MAINTENANCE.

a. GENERAL.—This paragraph lists the equipment necessary for complete inspection and overhaul as given in this section. For apparatus required only for relatively few tests, the application is given.

b. TEST CAGE.—A standard radio compass test cage should be available, with RF source and characteristics such that the field strength is known at the receiving loop position, and variable up to 100,000 microvolts per meter intensity. It must also supply signal to the noise antenna connection through a 50 micromicrofarad capacitor. It will be found a great convenience to have in the test cage a complete set-up known to be in good working order; localization of trouble can be facilitated by substituting suspected components into the good set-up, and good components into the equipment under test. The test cage is strongly recommended for alignment, and is required for overall performance tests.

c. RF SIGNAL GENERATOR.—The RF signal generator used for the directly applied signals may be the same one used as part of the test cage set-up. It should cover from 100 kc to 2500 kc. It should be capable of modulating the signal 30 per cent at 400 cycles per second for alignment and overall performance tests; internal modulation is convenient, but external modulation is equally satisfactory. External modulation is required for the test of vibrator frequency.

d. OUTPUT METER.—An output meter is an AC voltmeter, calibrated to read directly in watts (or other specified units), in combination with a load resistance of stated value. A very convenient form is Voltohmmeter I-166, or equivalent. In the absence of such an output meter, any 300-ohm ($\pm 5\%$) load can be used, such as two pairs of Headsets HS-33 connected in parallel, and a vacuum tube AC voltmeter connected across the load. (Some meters have a vacuum tube DC scales and low impedance AC scales. Do not use these.) If the resistance-and-voltmeter method is used, power is computed from the formula: Milliwatts $= \frac{10E^2}{3}$ where E is the voltage. The two commonly used points are 50 milliwatts, and 12.5 milliwatts, corresponding respectively to voltages of 3.87 and 1.94 across the 300 ohms.

e. METERS.—For DC voltage readings a 20,000-ohm-per-volt voltmeter should be used, if possible, especially for those readings which are different from those taken with a 1000-ohm-per-volt meter (see tables 5-3 or 5-4 and 5-5 or 5-6). For AC voltage readings, DC milliampere readings, and DC voltage readings where the more sensitive meter is not available, a 1000-ohm-per-volt voltmeter is the recommended instrument. A vacuum tube voltmeter for DC voltages is useful in measuring AVC values. These meters are not required for overall performance tests, except to verify the 26.5-volt DC supply.

eA. TUNING METER—An external tuning meter must be used for the installation check of Control Panel C-1514/A. Use DeJur Amsco Type FA-112, or equivalent, having a 295 micro amp movement from bumper to full scale.

f. TUBE TESTER.—Tube Tester I-177, or equivalent, is recommended for testing the tubes.

g. Q-METER.—The Q-meter may be any standard type, capable of measuring Q's at frequencies as low as 50 kc and as high as 2,000 kc. This instrument is required only for analysis of RF and IF coils, as indicated in table 5-14 or 5-14A.

h. OSCILLOSCOPE.—Any good quality general purpose oscilloscope may be used. This instrument is used in checking the loop control system.

i. AF SIGNAL GENERATOR.—Any good quality

general purpose AF signal generator may be used; the calibration should be checked before use. This instrument is used to modulate the signal at 400 cycles per second, provided the RF signal generator's internal modulation is not used. The instrument is also used if the vibrator frequency or loop amplifier frequency response is to be checked.

j. MISCELLANEOUS.

(1) Also needed is a Special Purpose Cable CX-1021/ARN-6. This cable makes point-to-point connections between the 22-contact receptacle J-501 in the receiver mounting and the mating plug P-102 in the receiver, so the receiver may be operated out of the mounting. (A substitute cable can be made up by using a spare J-501 and P-102, and connecting corresponding terminals with at least 5 feet of wire.)

(2) For timing speed of loop rotation use a stopwatch, or ordinary watch with a sweep second-hand.

(3) Miscellaneous supplies should be on hand, including tropicalization kit and masking tape, black wrinkle touch-up enamel, glyptal 1153 and 1276, and usual service tools.

11. OVERHAUL OF HERMETICALLY SEALED INDICATORS AND LOOP ANTENNA.

a. SPECIAL EQUIPMENT SUPPLIED.

(1) The overhaul of hermetically sealed units requires special equipment. Table 5-19 shows special equipment supplied by Bendix Radio Division of Bendix Aviation Corporation.

Table 5-19. Equipment Supplied

Bendix Type No.	*Army Type Designation*	*Description*
MM-62A	None	Overhaul Rack

b. SPECIAL EQUIPMENT REQUIRED BUT NOT SUPPLIED.

(1) Table 5-20 lists the equipment required but not supplied. The equipment consists of available commercial items or items that can be readily constructed.

c. USE OF EQUIPMENT.

(1) All special equipment and equipment required but not supplied is to be used for overhaul of both loop antennas and indicators.

d. OVERHAUL OF LOOP ANTENNA AS-313B/ARN-6.

(1) OPENING OF MAIN SOLDER SEAL.

(a) Place the loop antenna to be opened on the bench jig (see figure 5-43) and remove the five screws (reference 1) holding the bottom adjustment cover in place. Cut the exhaust tube (reference 2) midway between the soldered end and the loop housing cover. This is necessary to prevent solder from being sucked into the loop when the main solder seal begins to soften. Details for the bench jig construction are given in figure 5-44.

(b) Turn the power on to the "LOOP" Calrod heating unit in the MM-62A Overhaul Rack and allow it to pre-heat for approximately five minutes. When the unit is hot, place antenna to be opened in the heating unit with the dome end up. (See figure 5-45.)

(c) After the loop antenna has been in the heating unit for approximately ten minutes, the main solder seal will begin to soften. As soon as this occurs, tap the edge of the loop housing cover lightly at the end opposite the receptacle holders. This should be done with a small screwdriver and mallet to overcome the mechanical friction between the loop housing and the loop housing cover.

CAUTION

While the loop housing cover is being removed extreme care must be exercised to avoid damage to the connecting leads and the glass header assemblies. The interconnecting leads have approximately one inch of slack.

Table 5-20. Equipment Required But Not Supplied

Quantity	*Item*	*Use*	*Manufacturer's Part Number*	*Manufacturer*
1	Cutter	For cutting exhaust valve	No. 12X-1855	K. K. Porter Everett, Mass.
1	Snap ring remover	For removing snap rings	No. 51-12, 28	Waldes, Kohinoor, Inc. Long Island City, N. Y.
1	Wrench, Bristo No. 6	For general maintenance		(procure locally)
1	Wrench, Bristo No. 10	For general maintenance		(procure locally)
1	Wrench	For holding case cap and hermeflex assembly	To be constructed	(See figure 5-69)
1	Bench jig	For supporting loop assembly at mounting plate	To be constructed	(See figure 5-44)
1	Bench jig	For supporting loop assembly at inner support	To be constructed	(See figure 5-48)

(d) After the main solder seal has broken and the loop housing cover removed, the heating unit should be turned off and the loop antenna assembly allowed to cool for approximately ten minutes before removing it from the rack.

(e) When the loop antenna has cooled sufficiently to permit removal from the heating unit, the loop housing and the loop housing cover should be removed simultaneously, extreme care being exercised to prevent the loop housing cover from becoming entangled in the heating unit. After the loop antenna assembly has been removed from the heating unit, place it back in the bench jig with the dome end down. (See figure 5-46.)

(2) DISASSEMBLY PROCEDURE.

(a) LOOP HOUSING COVER REMOVAL.

1. Unsolder all of the interconnecting leads to the glass header assembly. This will permit complete removal of the loop housing cover. Do not further disassemble the adjustable cam assembly at this time.

(b) SUPPORT PLATE ASSEMBLY REMOVAL.

1. Remove the four socket head screws (see figure 5-47, reference 1) and the lock washers. (See reference 2.)

2. Grasp the large loop gear and carefully lift the support plate assembly out of the loop housing. Set the support plate assembly on the bench jig with the dome end down. (See figure 5-49.) Details for constructing this bench jig are given in figure 5-48.

CAUTION

Care must be taken when handling this unit to avoid damaging the loop shields. Never grasp the loop assembly at the shields.

(c) DISASSEMBLY OF SUPPORT PLATE ASSEMBLY.—The extent of disassembly depends upon what parts require repair or replacement. The gear train and motor assembly, the autosyn, the loop gear and post assembly and the brush holder assembly, may be removed individually as instructed in the following paragraphs:

1. REMOVAL OF MOTOR AND GEAR TRAIN ASSEMBLY.

a. Remove three screws (figure 5-50, reference 1) and three lock washers. (See reference 2.) Lift the gear train and motor assembly (reference 3) from the support plate. (See reference 4.)

b. To remove the motor from the gear train assembly, remove three screws (figure 5-51, reference 1) and three lock washers (reference 2), and lift the motor and pinion assembly (reference 3) from the gear train assembly. (See reference 4.) Do not further disassemble the gear train assembly at this time.

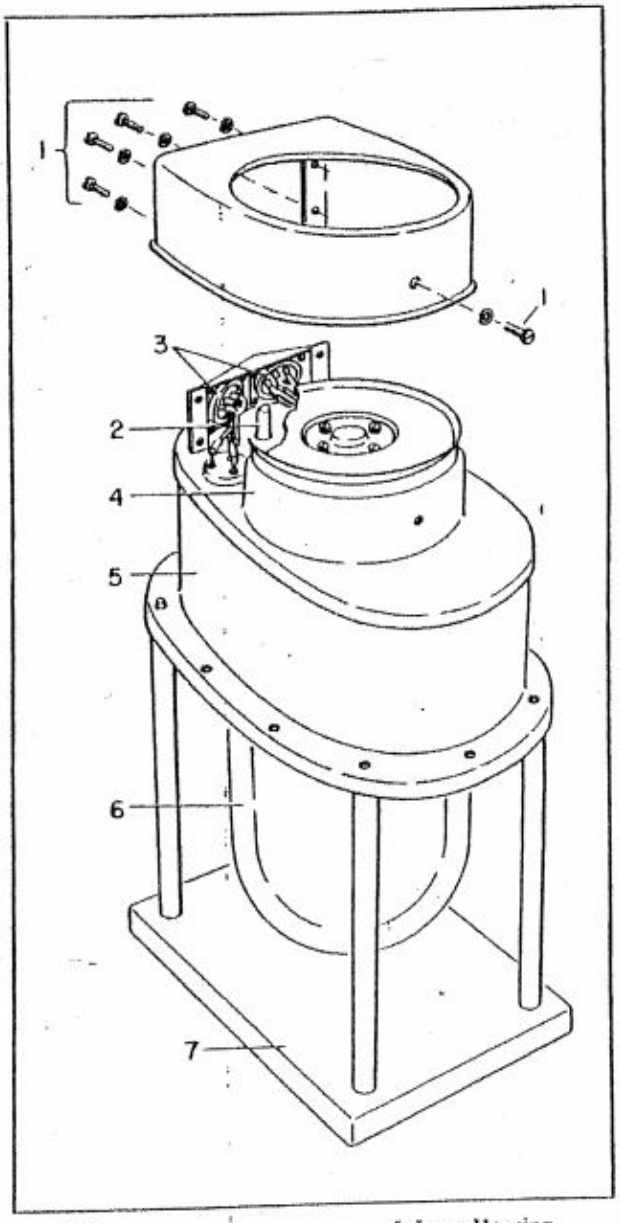

1 Screws
2 Exhaust Tube
3 Receptacles
4 Adjustable Cam Assembly
5 Loop Housing
6 Dome
7 Bench Jig

Figure 5-43. Removal of Bottom Cover and Opening of Exhaust Tube

2. REMOVAL OF AUTOSYN.

a. To remove the autosyn and the autosyn gear from the support plate assembly, remove three screws (figure 5-52, reference 1), lock washers (reference 2) and clamps (reference 3), holding the autosyn (reference 4) to the support plate. (See reference 8.) Slide the autosyn and autosyn gear (reference 5) out of the support plate. Remove the setscrew (reference 6) from the autosyn gear bushing (reference 7), and slide the bushing off the gear. Grasp the autosyn gear

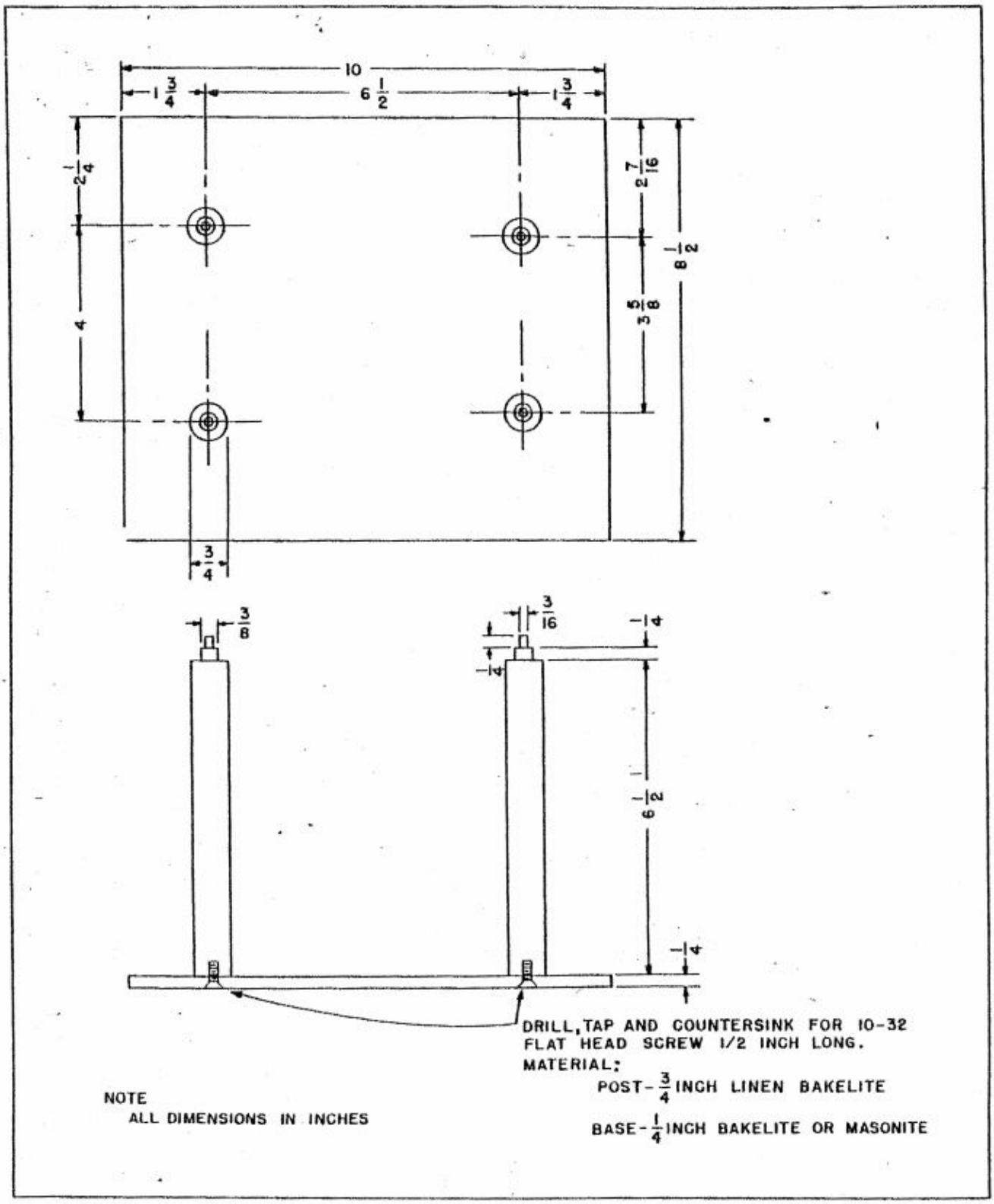

Figure 5-44. Bench Jig for Supporting Loop Assembly at Mounting Plate

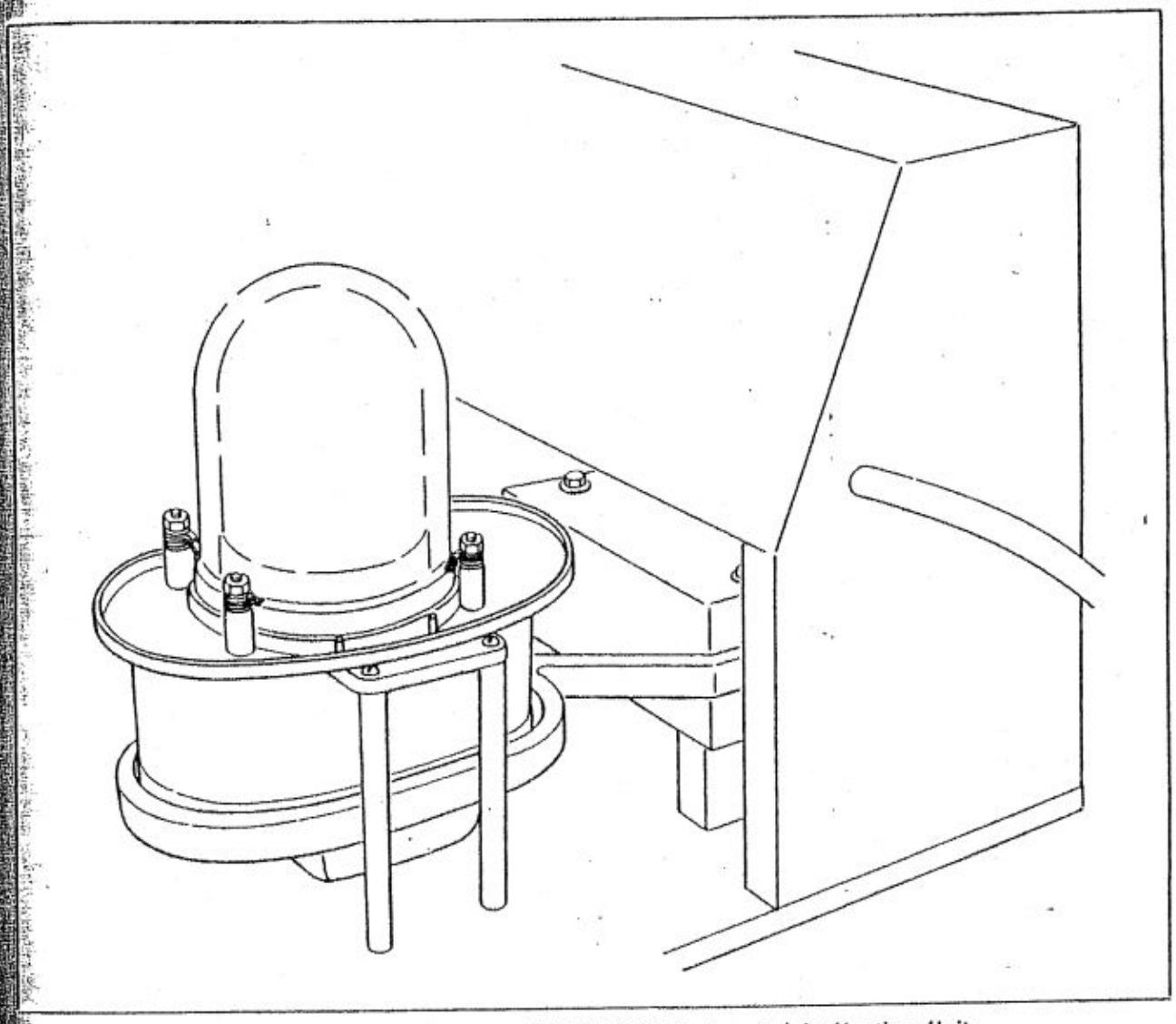

Figure 5-45. Loop Antenna AS-313B/ARN-6 Mounted in Heating Unit

(reference 5) firmly and slide it off the autosyn shaft.

3. REMOVAL OF BRUSH HOLDER ASSEMBLY.

a. Loosen the cable clamp (figure 5-53, reference 1) by loosening the screw. (See reference 2.) Carefully slide the loop cable assembly through this clamp. Remove the two screws (reference 3) and two lock washers (reference 4), holding the brush holder (reference 16) in place.

4. REMOVAL OF LOOP AND SHAFT ASSEMBLY, COMPENSATOR GEAR ASSEMBLY, AND GEAR AND POST ASSEMBLY.

a. Remove two screws (figure 5-53, reference 5), two lock washers (reference 6), and two flat washers (reference 7), and lift the compensator shaft assembly (reference 8) off the compensator gear. (See reference 12.)

b. Disengage the compensator gear spring (reference 9) from the clip on the loop gear (reference 15) and the post on the compensator gear. (See reference 12.)

c. Remove three screws (reference 10) and three lock washers. (See reference 11.) Slide the compensator gear (reference 12) off the hub and dowel assembly. (See reference 13.)

d. Pull out the dowel pin (figure 5-54, reference 1), and slide the hub (reference 2) off the loop shaft. (See reference 7.) Lift the loop gear (reference 3), the spacer (reference 4) and the ball bearing assembly (reference 5) off the loop shaft. (See reference 7.)

CAUTION

It is very important that the hub and dowel assembly be reassembled to the same loop

shaft from which it was removed. The tapered holes in the two parts are drilled in line as a unit.

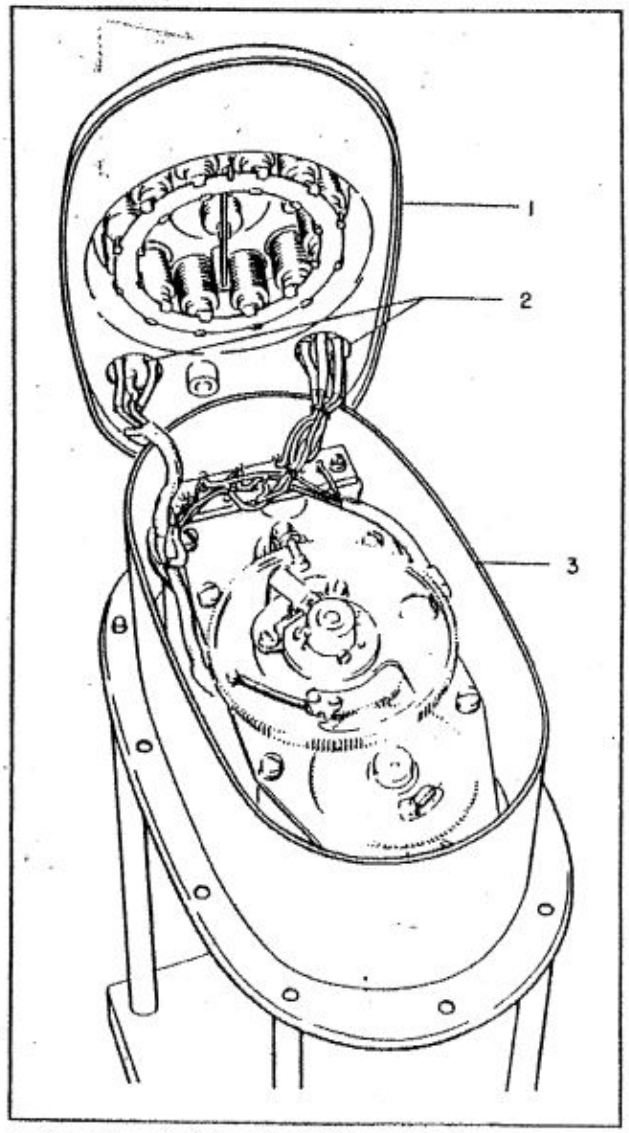

1 Loop Housing Cover
2 Glass Headers
3 Loop Housing

Figure 5-46. Opening of Main Solder Seal

(3) INSPECTION, CLEANING, AND REPAIR.

(a) GENERAL.—It is essential, after disassembly, to keep all parts clean and free from dust. Particular care must be taken to remove all traces of solder which may have splashed into the loop during the unsoldering of the main seal.

(b) ADJUSTABLE CAM ASSEMBLY.

1. Inspect the bellows assembly for cracks or distortion. Observe the condition of the silver solder fillet at the top of each bellows where the adjusting screw passes through.

2. Inspect the headers for cracked or chipped glass and bent terminals. If a header is damaged, unsolder it and solder a new one in its place using a 200-watt soldering iron.

3. Examine the cam strip for evidence of wear or kinks. If the cam strip requires replacement, cut the ends of the pins holding the compensator arm (figure 5-55, reference 1), and push the pins (reference 2) out of the posts thus releasing the compensator arm. Rotate the cam strip notch successively over each cam holder and disengage it. Place a new cam strip in the cam holders; replace the pins and compensator arm and secure the pins by swaging the ends.

(c) ADJUSTMENT COVER ASSEMBLY.

1. Remove the four screws (figure 5-56, reference 1), and four lock washers (reference 2), and lift the adjustment cover (reference 3) off. Remove the four screws (reference 4), and four lock washers (reference 5) and lift the adjustment dial (reference 6)

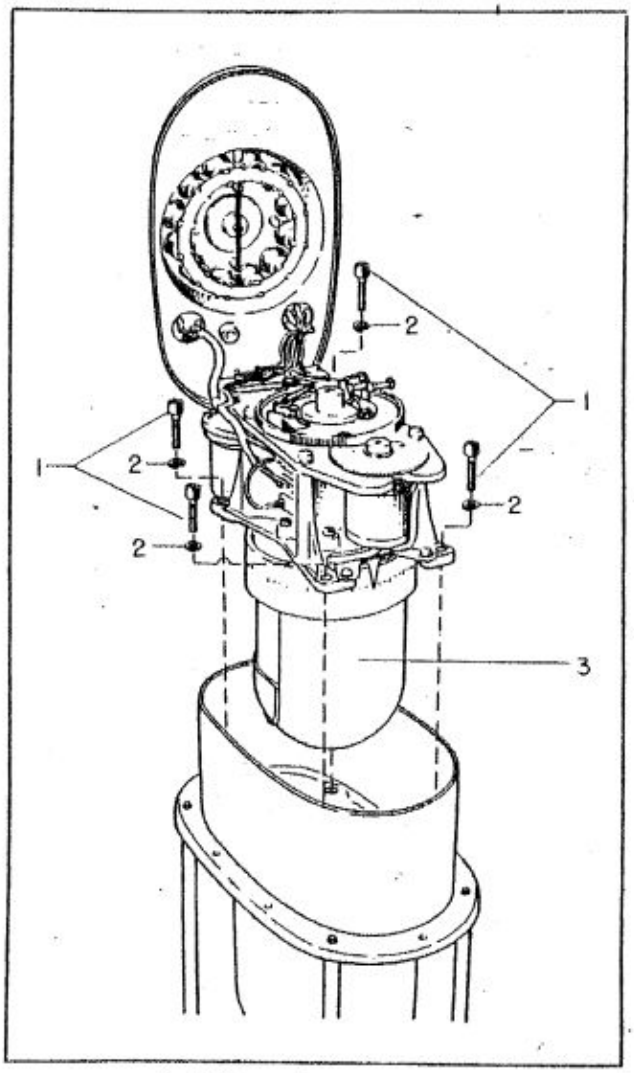

1 Screw
2 Lock Washer
3 Loop Assembly

Figure 5-47. Removing Loop Assembly from Housing

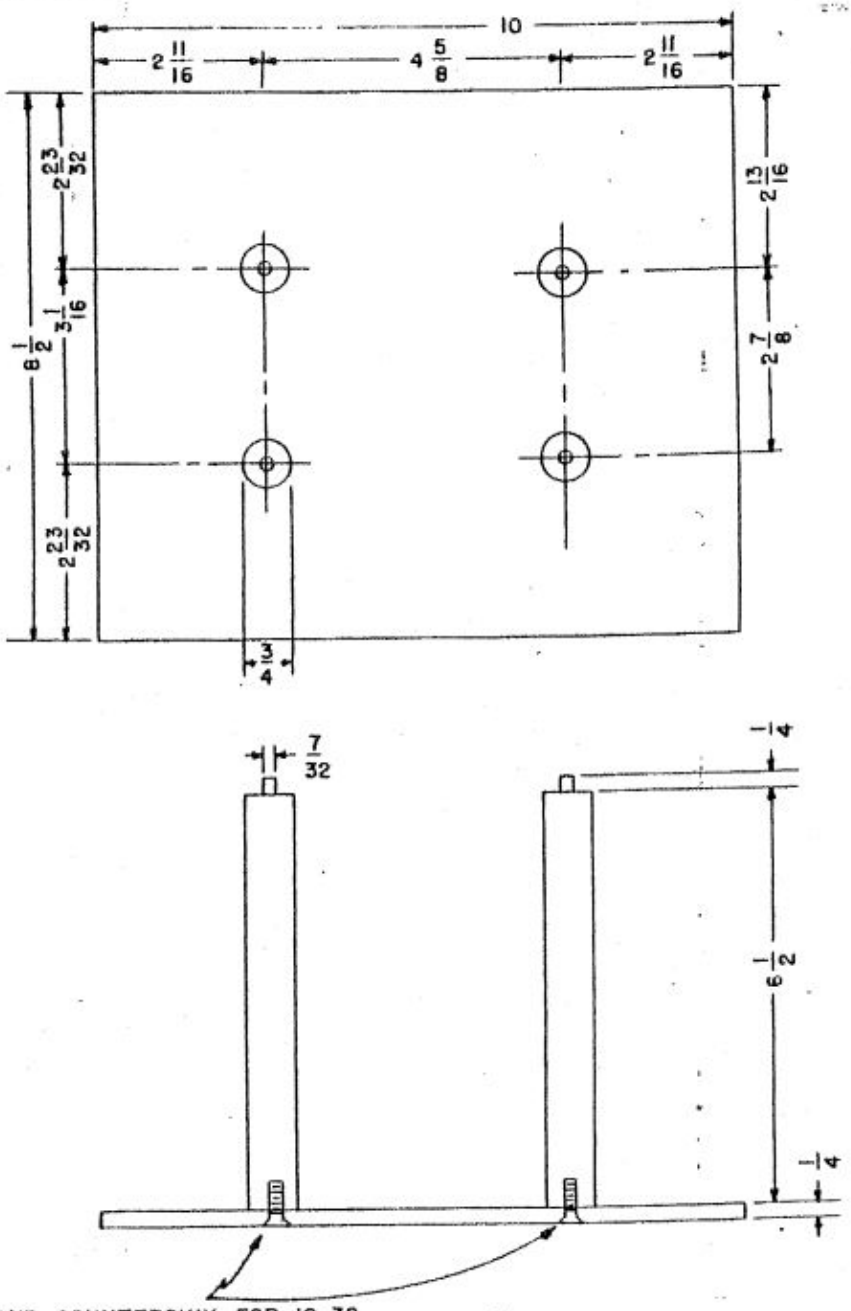

DRILL, TAP AND COUNTERSINK FOR 10-32 FLAT HEAD SCREW 1/2 INCH LONG.

MATERIAL:

POSTS - 3/4 INCH LINEN BAKELITE

BASE - 1/4 INCH BAKELITE OR MASONITE

NOTE
ALL DIMENSIONS IN INCHES

Figure 5-48. Bench Jig for Supporting Loop Assembly at Inner Support

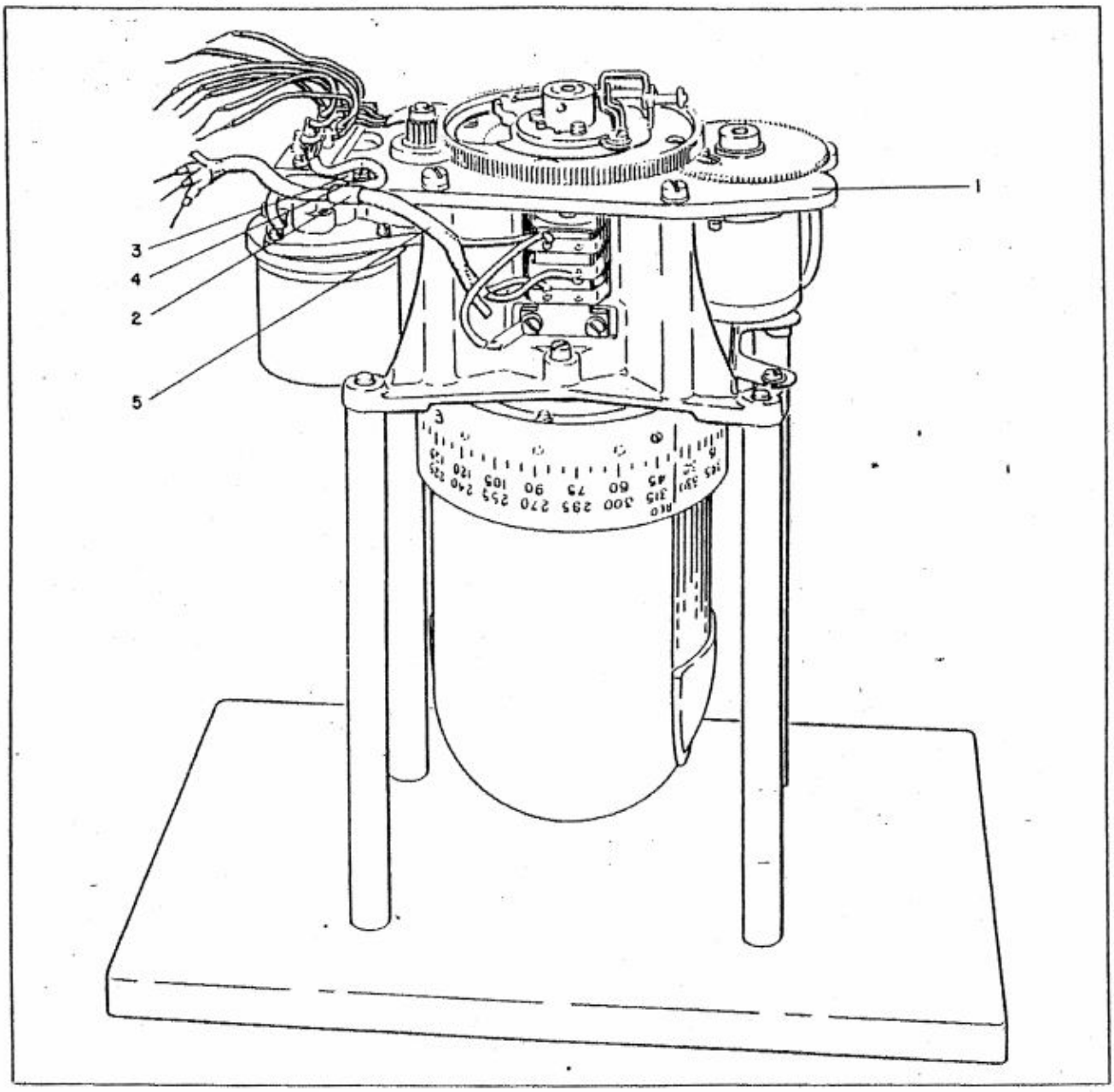

1 Support Plate
2 Cable Clamp
3 Screw
4 Lock Washer
5 Brush Assembly Cable

Figure 5-49. Loop AS-313B/ARN-6 Mounted on Bench Jig, Housing Removed

off. Remove the adjustment cover assembly (reference 7) by unscrewing the 13 adjustment nuts (reference 8) a few turns at a time in succession.

2. Examine the adjustment cover assembly and check each adjustment nut to determine if the snap ring is properly seated in its groove in the adjustment nut. This may be determined by exerting finger pressure on the open end of each adjustment nut. Using a screwdriver, turn each adjustment nut a few turns in both directions. A small amount of friction will resist the rotation, however, there must be no evidence of sticking or binding.

3. If it is found to be necessary to remove an adjustment nut, spring the snap ring (reference 9) open and slide the adjustment nut out. To replace an adjustment nut, slip a spring washer (reference 10) over the nut and then insert it into the adjustment cover assembly. (See reference 7.) Slip a flat washer (reference 11) over the end of the nut and secure it in place with the snap ring. (See reference 9.)

4. Before screwing the adjustment cover onto the loop housing cover again, clean thoroughly and

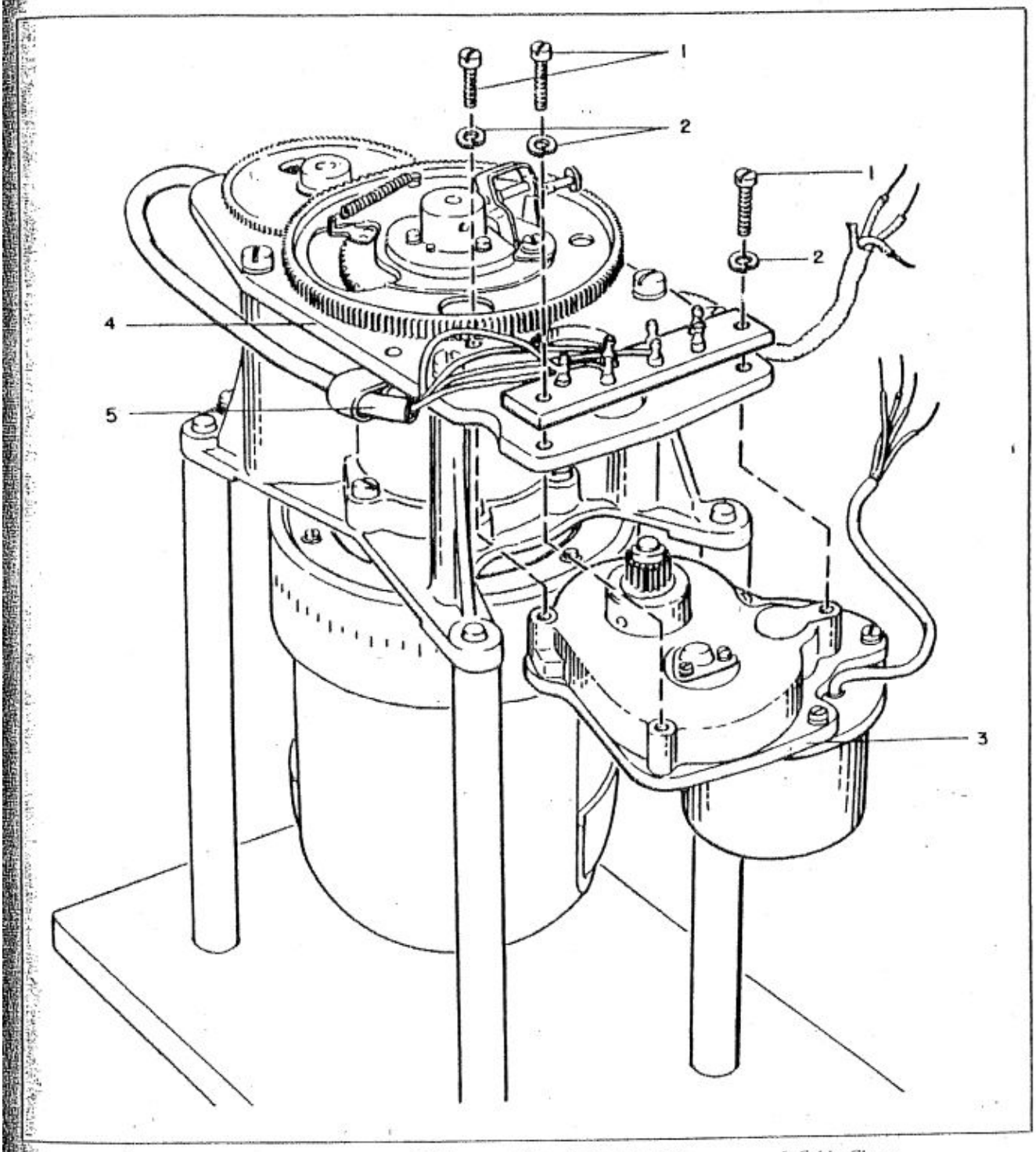

1 Screw
2 Lock Washer
3 Motor and Gear Train Assembly
4 Support Plate
5 Cable Clamp

Figure 5-50. Removal of Motor and Gear Train Assembly

then paint the bellows section of the loop housing cover without painting the actual bellows. Refer to paragraph 11*d*(8)(*a*) through (*c*) for paint specifications. Set the reinforcing ring (reference 12) and screw in the adjustment nuts evenly. Place the adjustment dial (reference 6) over the adjustment nuts so that the dial markings correspond with the adjustment nuts.

Note

The zero position of the loop is on the end away from the receptacle holder.

5. Secure the adjustment cover assembly to the loop housing bottom cover with the four screws (reference 1) and lock washers. (See reference 2.) Do not assemble the adjustment screw cover (reference 3) to the adjustment cover assembly at this time.

6. Unsolder the cut-off exhaust tube (reference 13) and soft solder a new one in its place.

7. Examine the wiring between the headers and receptacles. Replace any defective wiring in accordance with the wiring diagram in figure 8-12. Examine the condition of the receptacles and replace if any signs of damage are present.

(*d*) MOTOR AND PINION ASSEMBLY.

1. Examine the pinion (figure 5-57, reference 3); if it shows signs of wear or damage, replace it with a new pinion. To do this, hold the pinion securely and unscrew the holding nut. (See reference 1.) Then pull the flat washer (reference 2) off. Slide the pinion off the tapered shaft, being careful not to bend the shaft.

2. Check the end play of the motor shaft. End play should be between 0.002 and 0.005 inch using a one pound gauging load.

3. Check the resistance of the motor as follows:

Across Black and Gray—235 ohms ±10 per cent

Across Yellow and Green—560 ohms ±10 per cent

4. Use 550-volt ac at a commercial frequency (such as 60 cycles) for three seconds as a check for insulation breakdown between each lead and ground.

5. Spin the shaft by hand at low speeds to see if there is any excessive sticking or binding.

6. Check all screws for proper assembly and tightness.

(*e*) AUTOSYNS.

1. Check the end play of the autosyn shaft. End play should not exceed 0.001 inch with a one pound gauging load.

2. Check the resistance of the autosyn winding as follows:

Across Red and Black (rotor)—36 ohms ±10 per cent

Across any two stator leads—10.8 ohms ±10 per cent

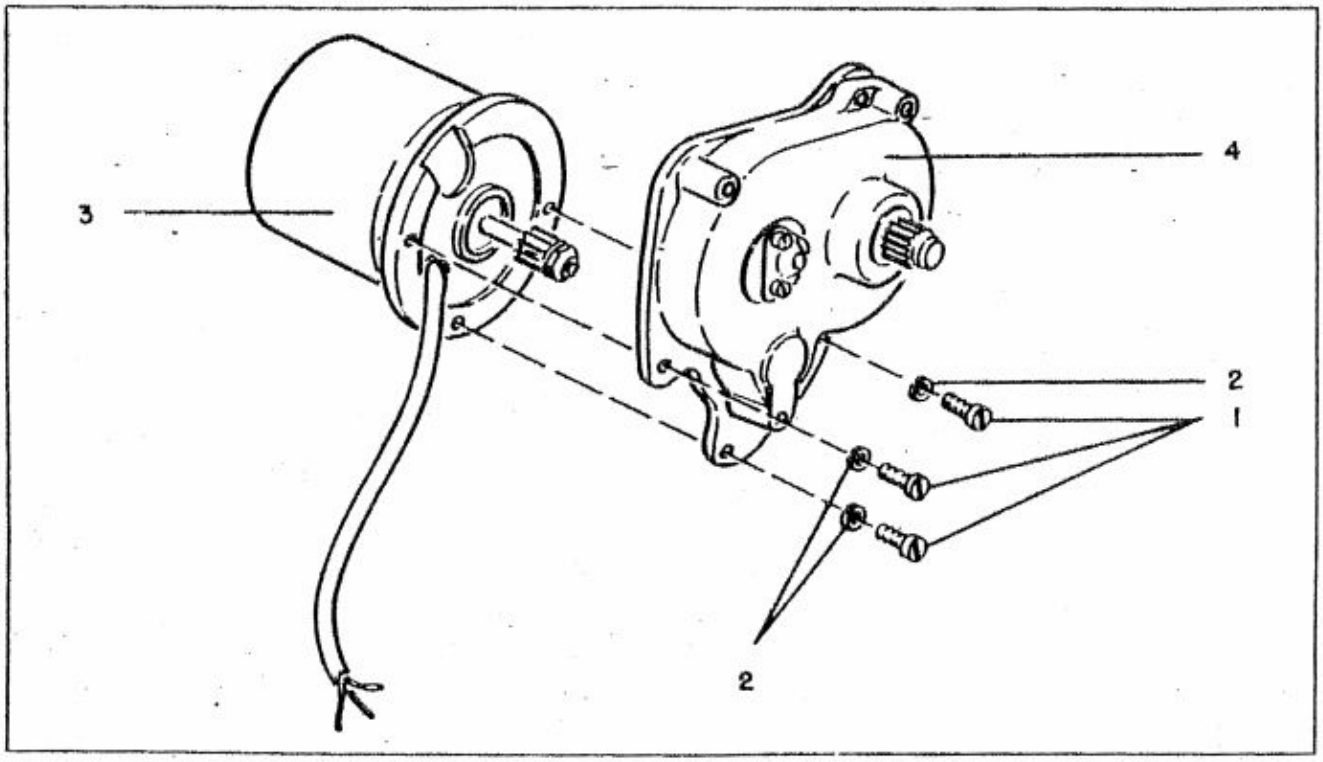

1 Screws
2 Lock Washers
3 Motor and Pinion Assembly
4 Gear Train Assembly

Figure 5-51. Motor and Gear Train Assembly

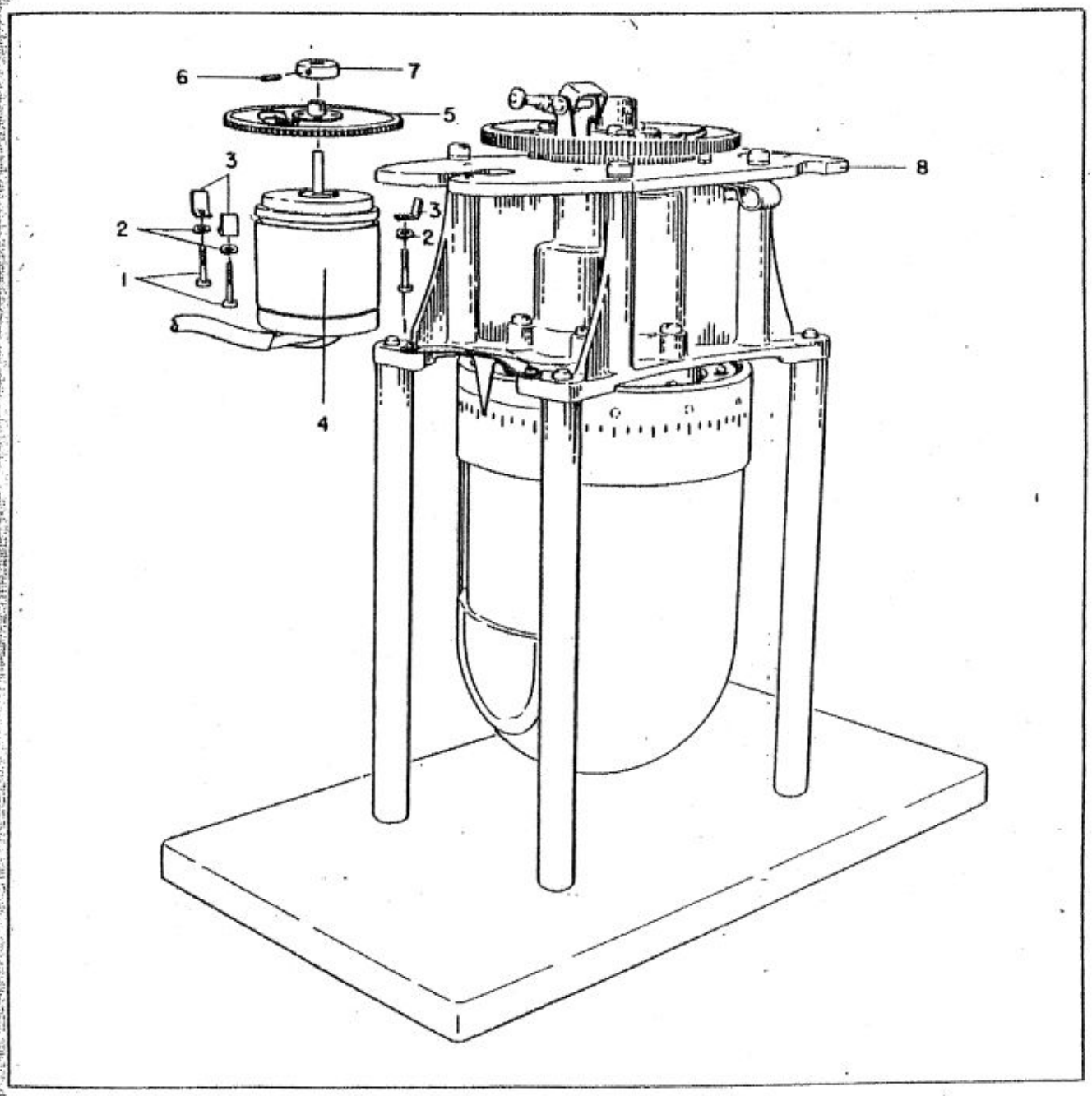

1 Screw
2 Lock Washer
3 Mounting Clamps
4 Autosyn
5 Autosyn Gear
6 Setscrew
7 Gear Bushing
8 Support Plate

Figure 5-52. Removal of Autosyn from Support Plate Assembly

3. With the autosyn in a horizontal position with no excitation, the torque required to overcome the static friction must not exceed 30 gramcentimeters.

4. Use 550-volt ac at a commercial frequency (such as 60 cycles) for three seconds as a check for insulation breakdown between each lead and ground.

5. Connect the autosyn to a Pioneer 5998-17E Master Indicator, or equivalent. Using an input of 22-volt ac at 100 cycles, check the indicator action as the transmitter is rotated slowly. The indicator should rotate slowly and in the same direction as the autosyn transmitter. During this test, observe the transmitter rotor current; it should be approximately 170 milliamperes and should be relatively steady, indicating continuous good brush and slip ring contact.

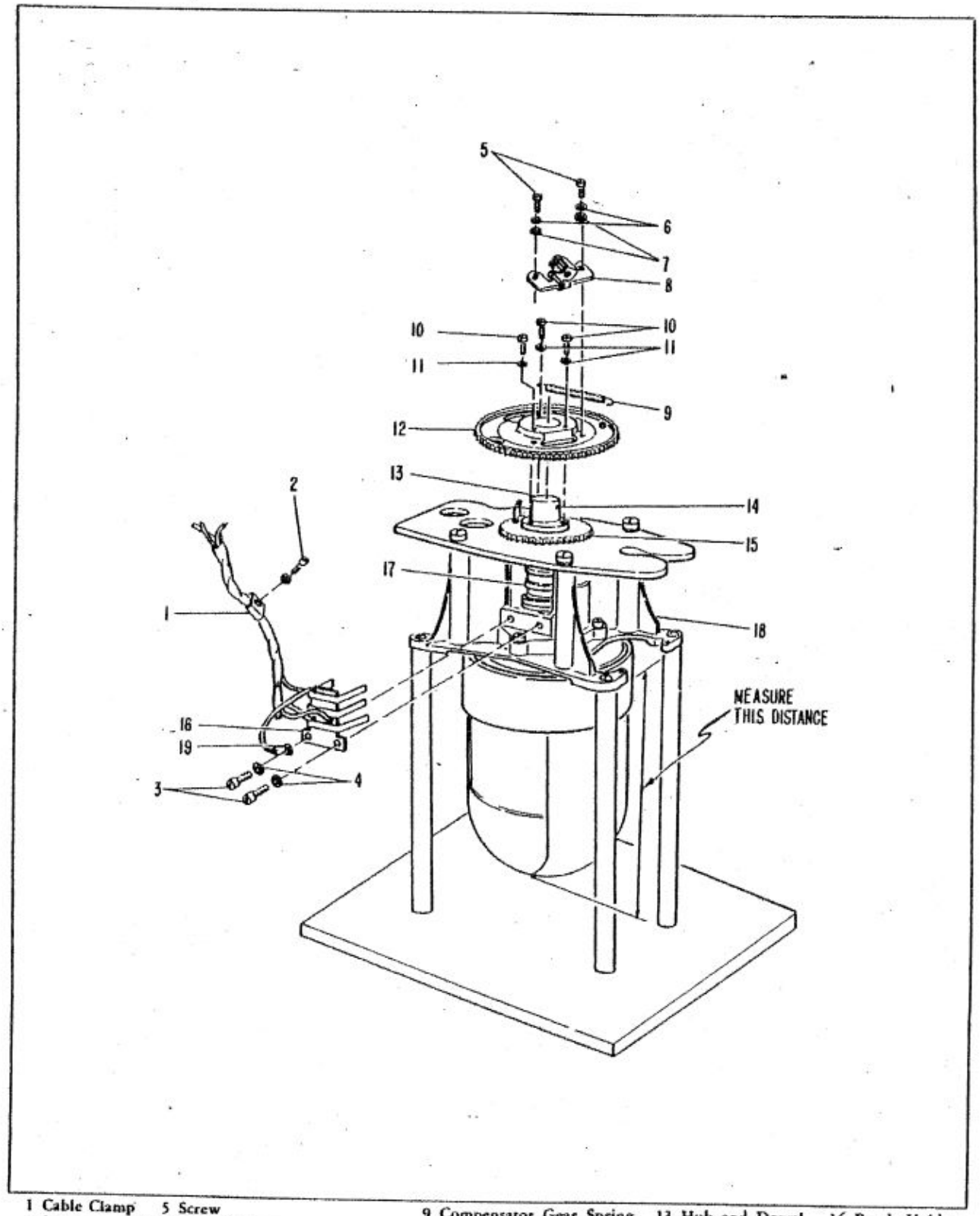

1 Cable Clamp
2 Screw
3 Screw
4 Lock Washer
5 Screw
6 Lock Washer
7 Washer
8 Compensator Shaft Assembly
9 Compensator Gear Spring
10 Screw
11 Lock Washer
12 Compensator Gear
13 Hub and Dowel Assembly
14 Dowel Pin
15 Loop Gear
16 Brush Holder
17 Slip Rings
18 Inner Support
19 Ground Lug

Figure 5-53. Removal of Compensator Gear Assembly and Brush Assembly

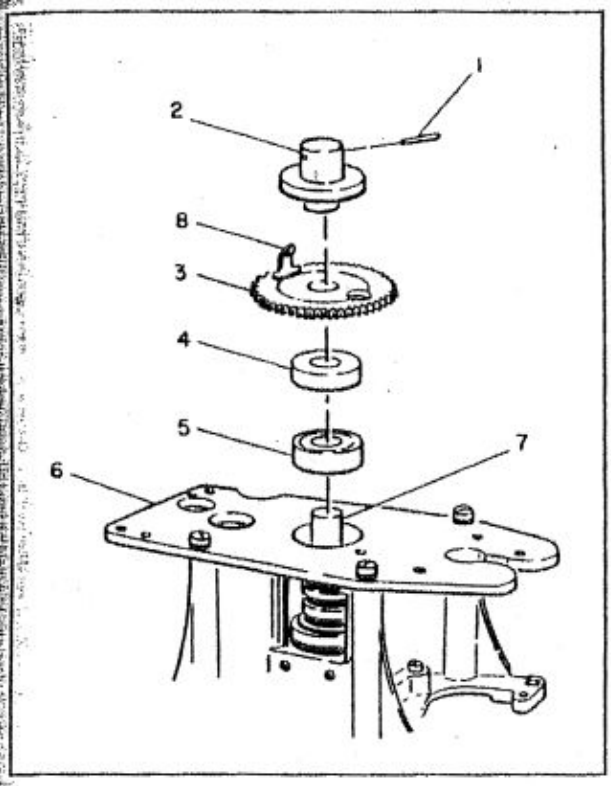

1 Dowel Pin
2 Hub
3 Loop Gear
4 Spacer
5 Ball Bearing Assembly
6 Support Plate
7 Loop Shaft
8 Spring Clip

Figure 5-54. Removal of Hub and Dowel Assembly, Loop Gear, Spacer, and Ball Bearing Assembly from Loop Shaft

(f) LOOP AND SHAFT ASSEMBLY.

1. Examine the two loop shields (figure 5-58, reference 1) for signs of damage. If necessary, they should be replaced in accordance with the following instructions:

a. Remove the four screws and lock washers (reference 3), the six screws (reference 4) and lock washers (reference 5), and slide the loop dial (reference 6) off. Carefully remove the shields which are cemented to the coil forms. Do not snap off the moulded locating pins on the coil forms. Cement the new shields in place with E.C.—826 cement (Minnesota Mining Co.). Note that the shields are located over the pins on the top of the coil form and are assembled tightly against the bearing surfaces of the top coil form. Examine the dial for damage, and if necessary, replace with a new one. Locate the dial on the loop so that the locating hole in the dial is centered with respect to the locating hole in the plate. This is very important since it determines the zero of the loop. Secure the dial and shields to the side of the plate with the four screws and to the bottom of the plate with six flat washers, lock washers, and screws which had been removed to take the dial off. All of the above screws must be glyptalled at the time of assembly.

2. Examine the ball bearings. (See figure 5-58, references 7 and 8.) Relubricate if necessary with filtered Univis P-38 Oil (Colonial Beacon Oil Co.). The large ball bearing assembly (reference 7) cannot be replaced individually because of the wiring to the slip-ring assembly. The small ball bearing assembly (reference 8) has a light press fit on the loop shaft and may be replaced if required. Check the locking nut (reference 9) to see that it is tight against the large ball bearing assembly. The setscrews (reference 10) in the locking nut must be assembled with glyptal.

3. Thoroughly clean and polish the slip rings (reference 11) prior to assembly, using fine polishing paper, grade 0, or equivalent.

4. Measure the Q and loop inductance using a Type 160A Q-Meter (Boonton Radio Corp.), or equivalent, and a precision variable capacitor. Measured by the two-frequency method, at 1000 kilocycles and 2000 kilocycles, the inductance of the loop prior to assembly into the case must be 25.5 microhenries plus 1.5 per cent. The Q must not be less than 50 at 1000 kilocycles nor less than 40 at 2000 kilocycles.

(g) COMPENSATE SHAFT ASSEMBLY.

1. Examine the compensator shaft assembly (figure 5-59), to determine if the roller (reference 1) rotates freely. If the roller is worn, replace the compensator arm. (See reference 2.)

2. Check the end play of the compensator arm assembly with respect to the adjustment bracket. (See reference 3.) The end play should be between 0.002 and 0.007 inch. If necessary, adjust the end play by inserting washers (reference 4), between the adjustment bracket (reference 3), and the compensator arm. (See reference 2.)

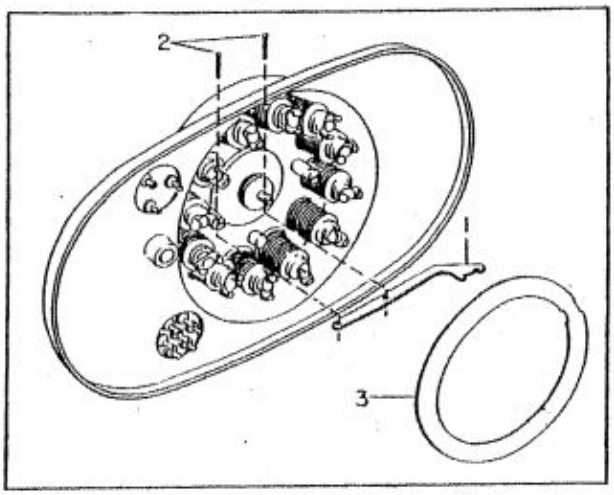

1 Compensator Arm
2 Pins
3 Flexible Ring

Figure 5-55. Disassembly of Compensator Arm Assembly

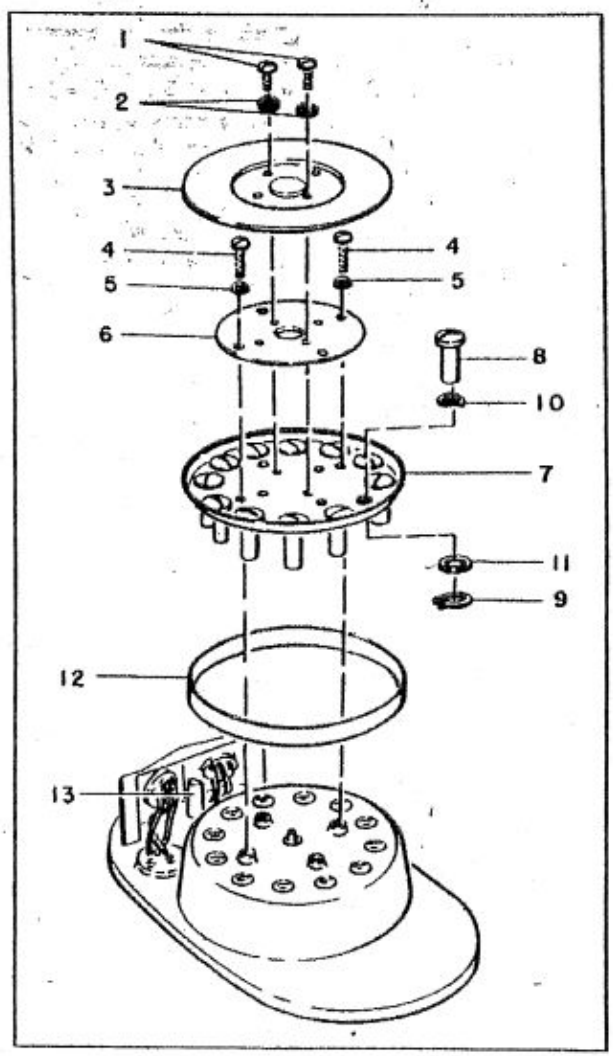

1 Screw
2 Lock Washer
3 Adjustment Cover
4 Screw
5 Lock Washer
6 Adjustment Dial
7 Adjustment Cover Assembly
8 Adjustment Nut
9 Snap Ring
10 Spring Washer
11 Flat Washer
12 Reinforcing Ring
13 Cut-off Exhaust Tube

Figure 5-56. Removal of Adjustment Cover Assembly

3. Check to see if the snap rings (reference 6) are properly assembled in the grooves.

4. Thoroughly clean the shaft and roller and relubricate with filtered Univis P-38 Oil (Colonial Beacon Oil Co.) or equivalent.

(b) MOUNTING PLATE ASSEMBLY. *(See figure 5-60.)*

1. Carefully examine the solder joints for good continuity of solder.

2. Carefully examine the glass dome (reference 1) and the glass to metal bond for cracks. If the glass dome is cracked, replace the entire assembly by removing the nut (reference 2), lock washer (reference 3), upper and lower glass clamps (references 4 and 5) and the pad (reference 6) and slipping off the glass dome.

(i) GEAR TRAIN ASSEMBLY.

1. Remove the three screws (figure 5-61, reference 1) and the three lock washers. (See reference 2.) Lift the gear plate (reference 3) from the gear housing (reference 4). These parts are dowelled together.

2. Remove two screws (reference 5), lock washers (reference 6) and dust cover. (See reference 7.)

3. Remove the snap ring (reference 8) and lift the gear cluster (reference 17) out.

Note

A snap ring remover is required to remove the snap ring. Snap rings should be removed from the end of shaft and not across the shaft if the snap ring is to be used in reassembly.

4. Examine the gear cluster (reference 17) for tight assembly and proper staking of gear to shaft. Replace the assembly if there is any evidence of wear or damage.

5. Remove the two setscrews (reference 9) and slide the loop pinion assembly (reference 10) out of this gear housing. Check the setscrew (reference 12) in the loop pinion (reference 11) for proper assembly. The ball bearings (references 13 and 15) must rotate freely. If the gear, pinion, sleeve, or ball bearings of this assembly are worn or damaged, replace the complete loop pinion assembly. (See reference 10.)

6. Clean the ball bearings (references 13 and 15) and relubricate with filtered Univis P-38 Oil (Colonial Beacon Oil Co.) or equivalent.

7. Check to see that the two dowel pins (reference 22) are securely anchored into the gear plate (reference 3) before reassembling the gear train assembly.

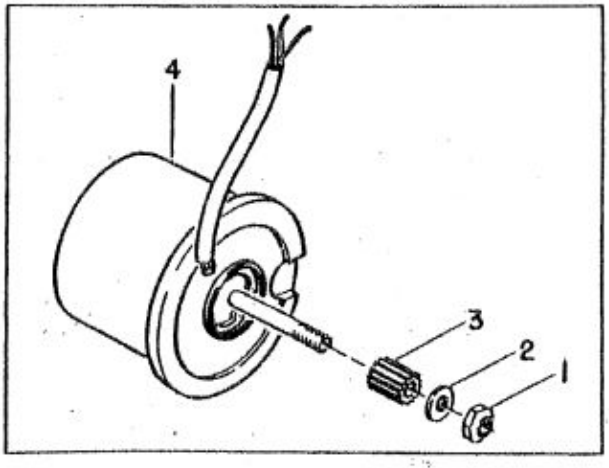

1 Nut
2 Washer
3 Pinion
4 Motor

Figure 5-57. Motor and Pinion Assembly

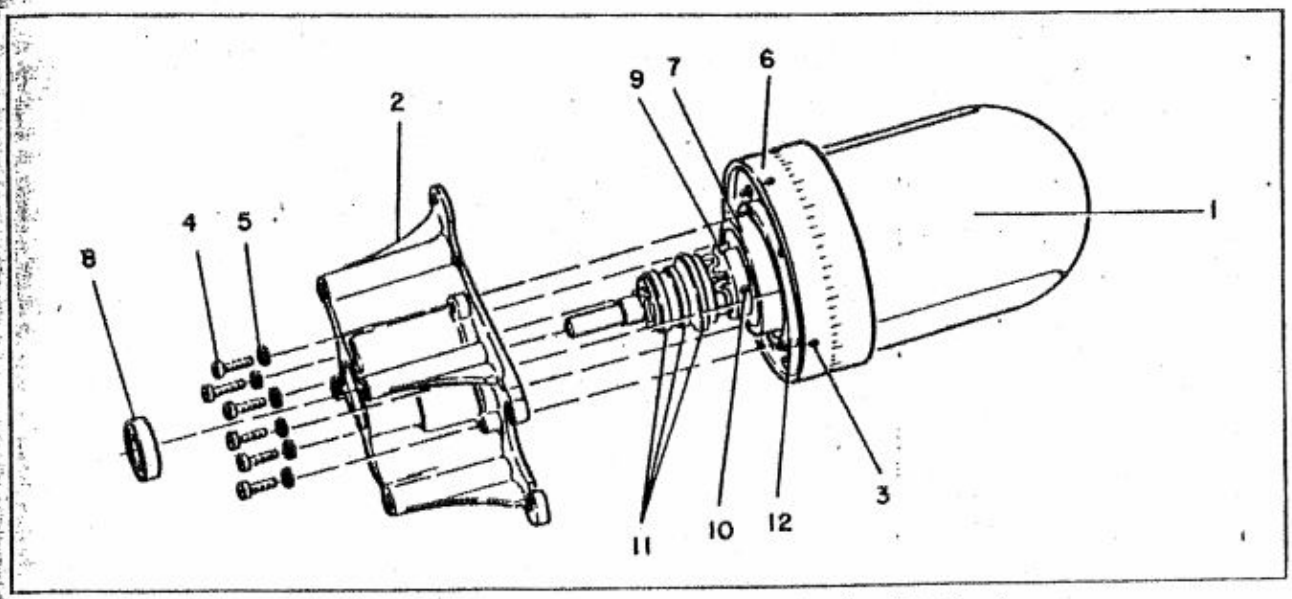

1 Loop Shields
2 Inner Support
3 Screws
4 Screws
5 Lock Washers
6 Loop Dial
7 Ball Bearing Assembly (large)
8 Ball Bearing Assembly (small)
9 Bearing Locking Nut
10 Locking Nut Setscrew
11 Slip Rings
12 Clamping Ring

Figure 5-58. Reassembly of Loop Shaft to Inner Support

CAUTION

Do not interchange plates or gear housings since they are drilled and dowelled as a set.

8. Reassemble the gear train assembly and lubricate the gears with Beacon M-325 Grease (Colonial Beacon Oil Co.), or equivalent. Use only enough grease to properly lubricate the gears; do not use an excessive amount.

9. Test the gear train with fingers for free rotation. There should be no binding or sticking.

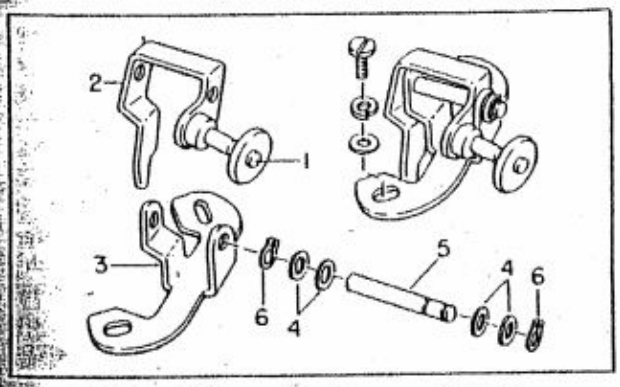

1 Roller and Sleeve Assembly
2 Compensator Arm
3 Adjustment Bracket
4 Washer
5 Arm Shaft
6 Snap ring

Figure 5-59. Disassembly of Compensator Assembly

10. Check all screws for tightness and proper assembly of lock washers.

(j) BRUSH HOLDER ASSEMBLY.

1. Examine this assembly for proper riveting. If the brushes are cracked around the rivets, the entire assembly should be replaced.

2. Polish the brushes with a fine polishing paper, grade 0, or equivalent.

3. Check to see that the brushes are properly spaced with respect to the slip rings and that they are parallel to each other.

(4) REASSEMBLY.

(a) REASSEMBLY OF SUPPORT PLATE ASSEMBLY.

1. Insert the loop and shaft assembly (figure 5-58) into the inner support (reference 2) so that both the large and small bearings (references 7 and 8) are properly seated.

2. Secure the bearing clamping ring (reference 12) to the inner support (reference 2) with the six screws (reference 4) and lock washers. (See reference 5.)

3. Secure the support plate (figure 5-62, reference 1) to the inner support (reference 2) with the four screws (reference 3) and the four lock washers. (See reference 4.)

4. Secure the pointer (reference 5) to the inner support (reference 2) with the two screws (reference 6), two lock washers (reference 7), and two flat washers. (See reference 8.) Before tightening the

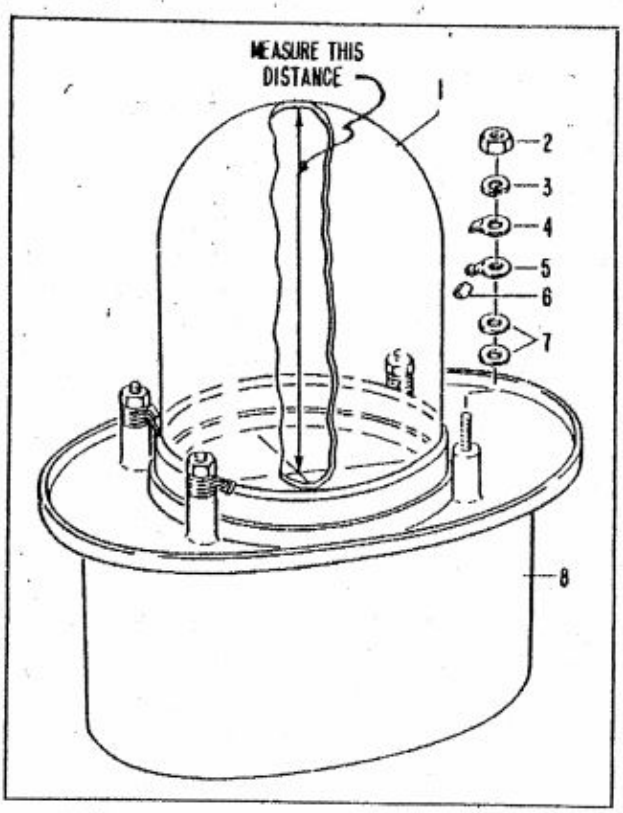

1 Dome
2 Nut
3 Lock Washer
4 Upper Glass Clamp
5 Lower Glass Clamp
6 Pad
7 Washers
8 Loop Housing

Figure 5-60. Mounting Plate Assembly

screws, position the pointer so that its tip falls on the centerline within 0.010 inch of the inner support (reference 2) relative to the four mounting holes in the inner support.

5. Secure the motor and pinion assembly (figure 5-51, reference 3) to the gear train assembly (reference 4) with the three screws (reference 1) and three lock washers. (See reference 2.)

6. Mount the motor and gear train assembly (figure 5-50, reference 3) onto the support plate (reference 4), with the three screws (reference 1) and three lock washers. (See reference 2.) Note that the screw which goes in the hole closest to the pinion gear is shorter than the other two.

7. Mount the autosyn (figure 5-52, reference 4) to the support plate (reference 8) and secure it in place with three mounting clamps (reference 3), three screws (reference 1), and three lock washers. (See reference 2.)

8. Set the loop assembly in the test jig with the loop winding facing down.

9. Slip the autosyn gear (reference 5) over the end of the autosyn shaft with the split gear hub facing away from the autosyn. Slip the gear bushing (reference 7) over the hub and temporarily secure it in place by tightening the setscrew. (See reference 6.)

10. Slide the ball bearing assembly (figure 5-54, reference 5) and the spacer (reference 4) over the end of the loop shaft. (See reference 7.) Slide the loop gear (reference 3) over the end of the loop shaft with the spring clip (reference 8) facing away from the loop. Before engaging the loop gear (reference 3), and the autosyn gear, adjust the spring tension between the two split sections of the autosyn transmitter gear by displacing one split gear with respect to the other by two or three teeth after removing all slack from the spring. Then slide the hub (reference 2) over the loop shaft in such a manner that the loop gear assembly (reference 3) locates itself on the shoulder of the hub. Line up the tapered hole in the hub with the tapered hole in the shaft and drive in the dowel pin (reference 1) which should be glyptalled prior to assembly.

11. Slip the compensator gear (figure 5-53, reference 12) over the hub and dowel assembly (reference 13) in the following manner:

a. The hole in the compensator gear must engage the dowel pin pressed into the hub.

b. The post riveted to the compensator gear must face away from the loop.

c. Position the loop gear (reference 15) so that its spring clip is free to travel within the cutout in the compensator gear. (See reference 12.)

d. Secure the compensator gear (reference 12) to the hub and dowel assembly with the three screws (reference 10) and the three lock washers. (See reference 11.)

12. Mount the compensator shaft assembly (reference 8) on the compensator gear (reference 12) in such a manner that the polished side of the compensator arm rides against the pin which is staked in the compensator gear assembly. Temporarily secure the compensator assembly in place with the two screws (reference 5) and lock washers (reference 6) and two flat washers. (See reference 7.)

13. Assemble the compensator gear spring (reference 9) by attaching one of its ends to the post of the compensator gear (reference 12) and its other end to the clip in the loop gear. (See reference 15.)

14. Check the action of the compensator arm of the compensator shaft assembly (reference 8) as it actuates the loop gear assembly. (See reference 15.) The resistance to the motion should be firm but not sticky as the loop gear is rotated through an angle of approximately 25 degrees on either side of the centerline cutout in the compensator gear. Repeat this check as the compensator gear is rotated through 360 degrees. There must be no binding between the pinion of the gear train assembly and the compensator gear.

15. Set the autosyn and loop to "zero" as follows:

a. Connect the autosyn transmitter to a 22-volt a-c, 100-cycle supply and to a Pioneer Master

Indicator 5998-17E (Pioneer Instrument Division of Bendix Aviation Corp.), or its equivalent.

b. Loosen (but do not remove) the setscrews (figure 5-52, reference 6), and the two screws (figure 5-53, reference 5), taking care not to disengage the mesh between the autosyn gear and the compensator gear.

c. Rotate the loop until the pointer (figure 5-63, reference 1) is lined up with the zero-degree graduation on the loop dial. (See reference 2.) It is very important that the loop remains fixed in this position while setting zero.

d. Push down on the roller (figure 5-64, reference 1) of the compensator shaft assembly until the centerline of the spring clip (reference 2) of the compensator gear assembly is directly in line with a centerline passing through the autosyn transmitter shaft. (See reference 3.) At the same time adjust the location of the compensator shaft assembly (reference 5) so that the center of the roller is also on this centerline. Tighten the two screws. (See reference 6.) Release the pressure on the roller and rotate the autosyn transmitter shaft (reference 3) with respect to the autosyn transmitter gear assembly (reference 7), until the master indicator reads 30 degrees. Then tighten the setscrew (reference 8) without shifting the setting. Apply glyptal to the head of the setscrew. Note that the autosyn transmitter gear assembly (reference 7) is secured to the autosyn transmitter shaft so that the mesh of the teeth of the autosyn transmitter gear assembly is central with the face of the teeth on the compensator gear assembly.

16. Before assembling the brush holder (figure 5-53, reference 16) to the inner support (reference 18),

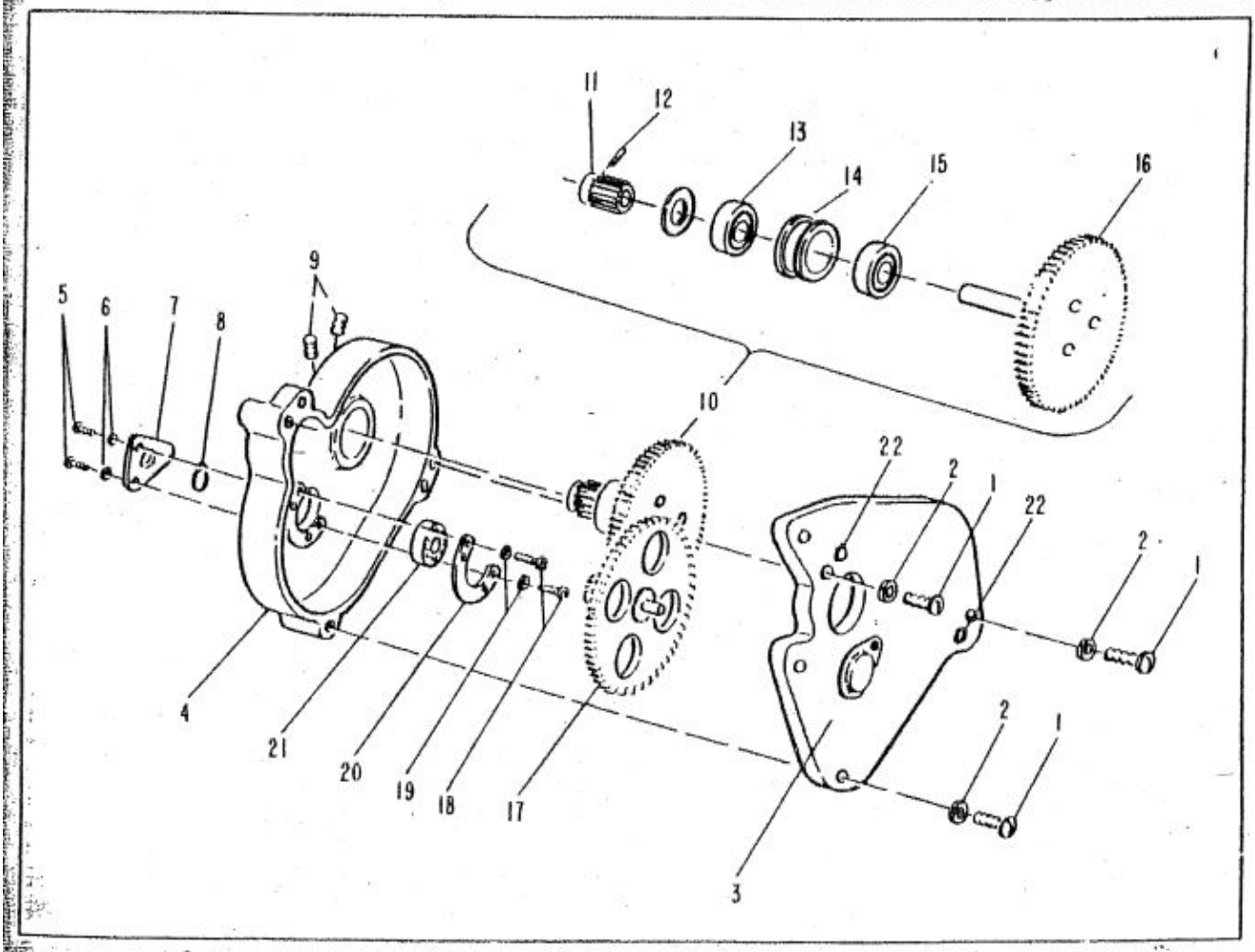

1 Screw
2 Lock Washer
3 Gear Plate
4 Gear Housing
5 Screw
6 Lock Washer
7 Dust Cover
8 Snap Ring
9 Setscrews
10 Loop Pinion Assembly
11 Loop Pinion
12 Setscrew
13 Ball Bearing Assembly
14 Bushing
15 Ball Bearing Assembly
16 Gear
17 Gear Cluster
18 Screws
19 Lock Washers
20 Bearing Clamp
21 Ball Bearing Assembly
22 Dowel Pins

Figure 5-61. Gear Train Assembly

check the spacing and centering of the brushes. The middle and lower brushes should be spaced ¾-inch apart and the upper brushes should be spaced one inch apart. (See figure 5-65.) Carefully slide the brushes over the slip rings (figure 5-53, reference 17) and secure the brush holder assembly to the inner support (reference 18) with the two screws (reference 3) and lock washers. (See reference 4.) Ground the solder lug (reference 19) to the inner support with one of the screws. Check to see that the brushes are in good alignment with the slip rings and the loop and shaft assembly.

17. Anchor the autosyn leads to the side of the support plate with the cable clamp (figure 5-50, reference 5), the screw (reference 1) and the lock washer. (See reference 2.) Anchor the loop cable assembly to the other side of the support plate with the cable clamp (figure 5-53, reference 1), the screw (reference 2) and the lock washer. (See reference 4.)

18. Inspect the clearance of all of the wires with respect to the moving parts. Leads must be sufficiently tight to prevent contact between the leads and the moving parts. All of the leads except the brush assembly leads should be protected with vinylite covering. The brush assembly leads are protected with cloth braid covering.

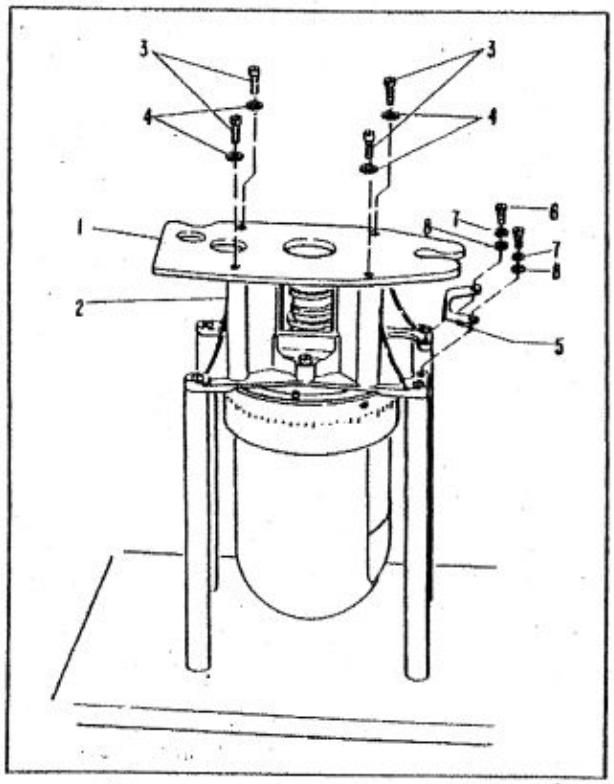

1 Support Plate
2 Inner Support
3 Screws
4 Lock Washers
5 Pointer
6 Screw
7 Lock Washer
8 Washer

Figure 5-62. Reassembly of Support Plate

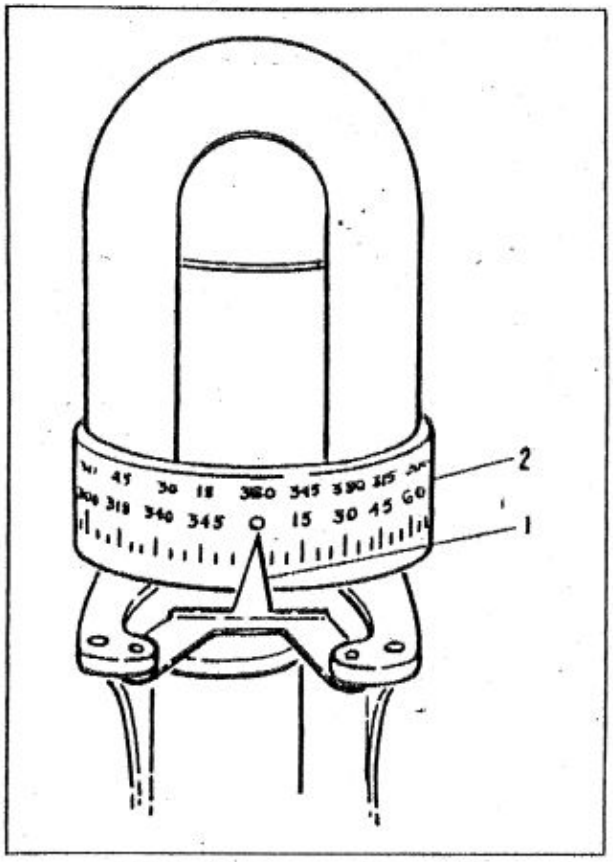

1 Loop Pointer 2 Loop Dial

Figure 5-63. Loop Dial Zero Adjustment Position

19. Examine all screw and lock washers for correct assembly and tightness.

20. Measure the height of the top of the loop shields above the mounting surface of the lugs on the inner support of the support plate assembly. (See figure 5-53.)

21. Measure the inside height of the top of the glass dome above the surface of the mounting plate adjacent to the four mounting inserts. (See figure 5-60.) Select a mounting plate assembly whose inside height exceeds that of the top of the loop shields by at least 1/32 inch.

22. Carefully examine the two subassemblies for dirt, lint, or solder chips prior to assembly. Secure them together with the four screws (figure 5-47, reference 1), and four lock washers. (See reference 2.) Rotate the loop slowly by turning the loop gear by hand and check to see if there is any interference between the loop assembly and the glass dome.

23. Re-tin the extreme outside of the loop housing (figure 5-46, reference 3), for about ½ inch from the edge. Similarly, re-tin the inside mating surface of the loop housing cover. (See reference 1.) This operation will facilitate soldering the final seal.

24. Solder the autosyn transmitter and motor leads to the terminal board (figure 5-46), in accordance

with the wiring diagram in figure 8-12. Then solder the leads from the terminal board and the leads from the loop brush assembly to the headers in accordance with the wiring diagram in figure 8-12. If it is necessary to replace any wire, the color coding, wire size, and wire type should be the same as the original assembly.

25. Connect the loop antenna assembly into a standard screen room test set-up. Using a four inch arm locked to the loop shaft, measure the stalled torque of the loop at fast speed. The stalled torque must not be less than 20 pound-inches in either direction of rotation.

26. Examine the adjustable cam assembly for dirt, lint or solder chips.

27. Prior to assembly of the adjustable cam assembly, apply a very light coat of Beacon M-325 Grease (Colonial Beacon Oil Co.), or equivalent, to the same strip. Then carefully fit the adjustable cam assembly over the sleeve of the mounting plate assembly and clamp these subassemblies together while performing the Pre-Final Tests. Remove the loop antenna assembly from the test set-up.

(5) PRE-FINAL TESTS.

(a) ELECTRICAL BREAKDOWN.

1. No insulation breakdown should occur when 550-volt ac at a commercial frequency (such as 60 cycles) is applied between any ungrounded circuit and ground.

(b) POLARITY.

1. Rotate the loop until the zero-degree graduation of the loop faces West. Pass a current of 0.25-amperes dc through the loop winding, having the positive pole of the battery connected to pin "B" of the electrical connector receptacle and the negative pole connected to pin "C". With a correct magnetic compass located on the zero-degree side of the loop and in a plane approximately even with the bottom of the hemispherical dome of the loop, the north seeking end of the compass needle must be attracted toward the loop.

(c) SLIP-RING CONTACT.

1. Connect a 45 or 22½-volt B-battery in series with a 600-ohm headset and the loop windings. Rotate the loop at fast speed and slow speeds. The presence of any noise in the headset as the loop is rotating indicates poor brush and slip-ring contact. An alternate method of making this test is to send 0.25 amperes of dc through the coil and observe the variation of voltage across the loop winding as measured with a millivolt meter. This voltage should be between 25 and 33 millivolts (including the voltage drop

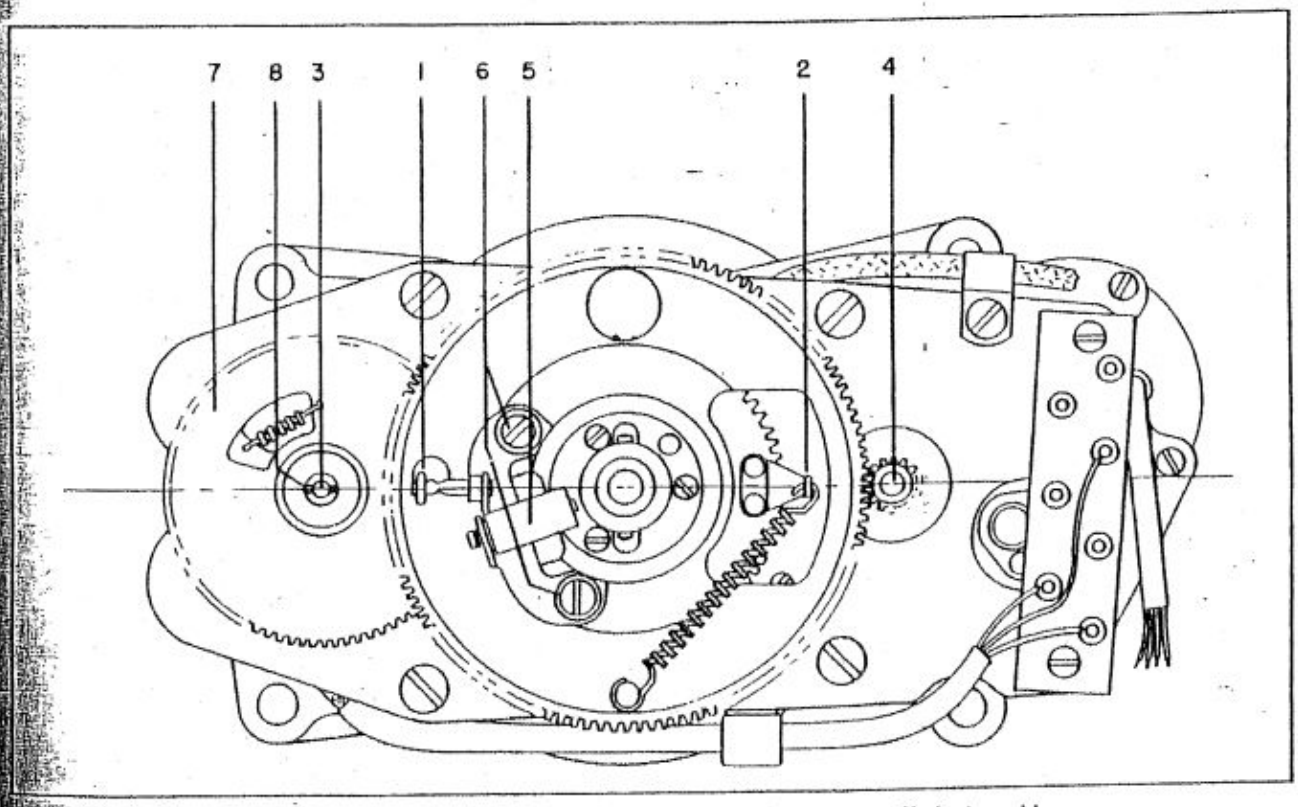

1 Roller
2 Spring Clip
3 Autosyn Transmitter Shaft
4 Pinion Gear
5 Compensator Shaft Assembly
6 Screws
7 Autosyn Transmitter Gear Assembly
8 Setscrew

Figure 5-64. Alignment of Adjustable Cam Assembly

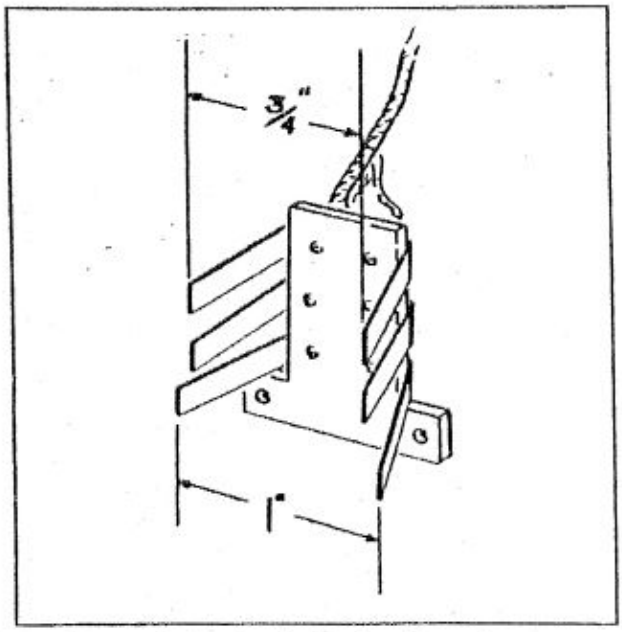

Figure 5-65. Brush Spacing, Loop Antenna A5-313B/ARN-6

in the cable) which is not to exceed three millivolts across the terminals of the loop, and the variation in voltage should not exceed five millivolts in either set of brushes as the loop is rotated through 360 degrees indicating good brush and slip-ring contact.

(d) DIRECTION OF ROTATION AND SPEED.

1. Connect the loop into a standard screen room test set-up. Adjust the loop compensator screws so that the loop is compensated with a sinusoidal correction of 20 degrees with maximum correction points at 45, 135, and 315-degree azimuth positions. With the power on, rotate the loop in both directions and check to see if there is a tendency to stick as evidenced by other than smooth, uniform action. Check the loop for correct rotation and correct indicator action and rotation. Measure the loop speed in both directions. The loop speed should be between 30 and 45 degrees per second for fast speed and between 5 and 11 degrees per second for slow speed.

(e) LOOP Q AND INDUCTANCE.

1. Measure the inductance of the loop by the two-frequency method (1000 kilocycles and 2000 kilocycles) with a Model 160A Q Meter (Boonton Radio Corp.), or equivalent, and a precision variable capacitor. The inductance with the loop in the zero position shall be 24.3 microhenries plus one per cent minus 1.5 per cent. The Q shall not be less than 50 at 1000 kilocycles and not less than 40 at 2000 kilocycles.

(6) RESEALING.

(a) The loop antenna assembly should be mounted in the bench jig with dome end up. Check the clamps to make sure that the loop housing cover and the loop housing are held tightly together. Using a 250-watt soldering iron with a flat tip and rosin core solder (recommended lead to tin ratio of 63 to 37), form an airtight solder seal around the seam. Care should be exercised to prevent overheating and damaging the headers on the interior, however, sufficient heat should be applied to form a smooth fillet of solder.

(b) After the main solder seal has been formed, the joint should be rubbed lightly with a wire brush to remove all excess rosin and to leave the solder seal clean for inspection of small air leaks.

(7) EVACUATION AND LEAK DETECTION FOR LOOP OR INDICATOR.

(a) With the main solder seal made and a new exhaust tube soldered in place, the loop or indicator is ready for evacuation and filling with dry nitrogen and sealing.

(b) To flush and evacuate the loop or indicator, the rubber manifold hose (figure 5-66, reference 1) is connected to the exhaust tube (reference 2) and clamped securely to prevent leakage.

(c) Close the valve marked "VACUUM" (reference 4) and open the valve marked "NITROGEN." (See reference 5.)

(d) Open the valve on the nitrogen tank (reference 6), noting the bottle pressure on the gauge. (See reference 7.)

(e) Open the nitrogen line valve. (See reference 8.)

(f) Gradually open the nitrogen regulator valve (reference 9) until 15 pounds per square inch is registered on the manifold pressure gauge (reference 10), indicating that the loop (indicator) and manifold have been filled with dry nitrogen. This pressure may also be read on the regulator pressure gauge. (See reference 11.)

(g) With the manifold pressure gauge continuing to indicate 15 pounds per square inch pressure, submerge the entire loop or indicator assembly in a container of warm water (approximately 85° F) and examine closely for indications of air leaks around the main solder seal, dome and header assemblies. If such leaks are present, the loop or indicator should be removed from the water, the nitrogen supply turned off and the leaks repaired. If signs of leaks appear around the glass header assemblies, they must be replaced.

(h) If no signs of leakage appear, the loop or indicator should be left submerged for a minimum of five minutes under 15 pounds per square inch pressure as a precaution against immediately undetectable leaks.

Note

In locations where high humidity prevails, it is advisable to bake the loop antenna assembly or indicator in an oven at 185 degrees for a period of three hours before the leak detection test is made.

(i) If after this procedure has been completed, and no signs of leaks are detected, remove the assembly from the water while still connected to the manifold, and place in a convenient position for scavenging.

(j) Scavenging is accomplished by closing the "NITROGEN" valve (reference 5) and starting the vacuum pump by setting the compressor ON-OFF switch (reference 12) on the heating unit to the "ON" position. The valve marked "VACUUM" (reference 4) is then opened, thus evacuating the loop antenna assembly or indicator and the manifold. This condition is to remain unchanged until the manifold pressure gauge (reference 10) stabilizes at the lowest vacuum reading. The "VACUUM" valve is then closed and the "NITROGEN" valve is gradually opened. Observe that the nitrogen tank regulator (reference 11) is still reading 15 pounds per square inch.

(k) When the system has stabilized at 15 pounds per square inch, as indicated by the manifold pressure gauge, close the "NITROGEN" valve and gradually open the "VACUUM" valve. The vacuum pump is to remain running continuously throughout the scavenging cycle. When the vacuum pump has evacuated the manifold and loop or indicator as indicated by a minimum reading on the manifold pressure gauge, one scavenging cycle has been completed. These scavenging cycles are for the purpose of removing any traces of air or water vapor that may be present in the loop antenna assembly or indicator which would cause rust or corrosion at some later date, rendering the equipment inoperative. It is recommended that a minimum of three scavenging cycles as described above, be made.

(l) At the completion of the scavenging cycles, close the "VACUUM" valve, fill the entire system to 15 pounds per square inch with dry nitrogen. When this pressure has been reached, as indicated by the manifold pressure gauge, close the "NITROGEN" valve.

(m) With manifold hose still connected, cut exhaust tube with a cutter. The exhaust tube must be soldered immediately to prevent the nitrogen from escaping. The exhaust tube, when cut, should not extend more than 1⅛ inches above loop housing cover (hermeflex).

(8) FINAL TEST AND INSPECTION.

(a) Using a universal lacquer thinner, wash the outside of the loop antenna assembly or indicator with a brush to remove all traces of dirt and grease.

(b) Spray all external metal parts with a light coat of "Ecodur Zinc Chromate Speed Primer N. 51401" (Mass & Waldstein, Newark, N. J.), or equivalent. Allow the primer to air dry. If necessary, the primer may be force-dried by baking for ½ hour at 150°F(66°C) to 170°F(77°C). Use one part primer to two or two and one-half parts of Reducer No. 8 (Mass & Waldstein), or equivalent.

(c) Then spray all external parts with dull black lacquer using "Kissling No. 7587, Dull Black Technicote" (L. J. Kissling & Sons, New York, N. Y.) or equivalent. Use one part of lacquer to two or three parts of "Kissling No. 5052 Thinner" or equivalent. Allow lacquer to air dry. If necessary lacquer may be force-dried by baking for one hour at 175°F(79°C).

(d) Check all external soldered wire connections and coat them with fungicidal varnish (Mass & Waldstein's No. 512A), or equivalent. Slide vinylite tubing in place over all wiring solder joints.

(e) Check for proper assembly of the adjustment cover, adjustment dial, and reinforcing ring. The adjustment cover assembly must bear tightly against the reinforcing ring.

(f) Repeat the tests outlined under "Pre-Final Tests." [Refer to Paragraph 11*d*(5).] At the conclusion of tests, reset the compensator so that the master autosyn indicator shows the correct loop position. Adjust compensator screws to zero correction plus or minus one degree at each 15-degree point and plus or minus ¼ degree at the zero point. Be sure that each compensator screw turns without sticking or binding.

(g) At the completion of this, set up the correction required for the operation in the airplane and observe whether the indicator follows this correction smoothly and continuously as the loop is rotated.

(h) Measure the loop speed in both directions. It should be between 30 and 45 degrees per second, on fast speed and between 5 and 11 degrees for slow.

(i) See figure 5-56 after completing all tests. Assemble the adjustment cover (reference 3) to the bottom cover with the four screws (reference 1) and lock washers (reference 2). Assemble the adjustment case to the loop housing (figure 5-43, reference 5.)

(j) Examine the completed loop for proper finish, location of nameplate, receptacle notations, and instructions. All notations must be clear and readable.

e. OVERHAUL OF INDICATORS ID-90( )/ARN-6, ID-91A/ARN-6, ID-91B/ARN-6, ID-231A/ARN-6, ID-231D/ARN-6, AND ID-231E/ARN-6.

(1) GENERAL.—The overhaul procedure for Indicators ID-90( )/ARN-6, ID-91A/ARN-6, ID-91B/ARN-6, ID-231A/ARN-6, ID-231D/ARN-6, and ID-231E/ARN-6 is essentially the same for all seven indicators. The units differ primarily in paints used on the dial faces. Indicator ID-231( )/ARN-6 differs from Indicators ID-90( )/ARN-6 and ID-91( )/ARN-6 in that the pointer is displaced 270 degrees to compensate for the error induced when the Loop Antenna AS-313B/ARN-6 is mounted with its major axis 90 degrees from the fore-and-aft center line of the fuselage of the aircraft. Indicators ID-91B/ARN-6, ID-231D/ARN-6, and ID-231E/ARN-6 further differ from the other indicators only in that the synchro repeaters are smaller and lighter-weight; the mounting plate and clamps have been strengthened; and these units are non-interchangeable with the corresponding part in Indicators ID-90( )/ARN-6, ID-91A/ARN-6, and ID-231A/ARN-6.

(2) OPENING MAIN SOLDER SEAL.

(a) PRELIMINARY PROCEDURE.—Prior to opening the main solder seal, some of the external parts of the indicator must be removed as follows:

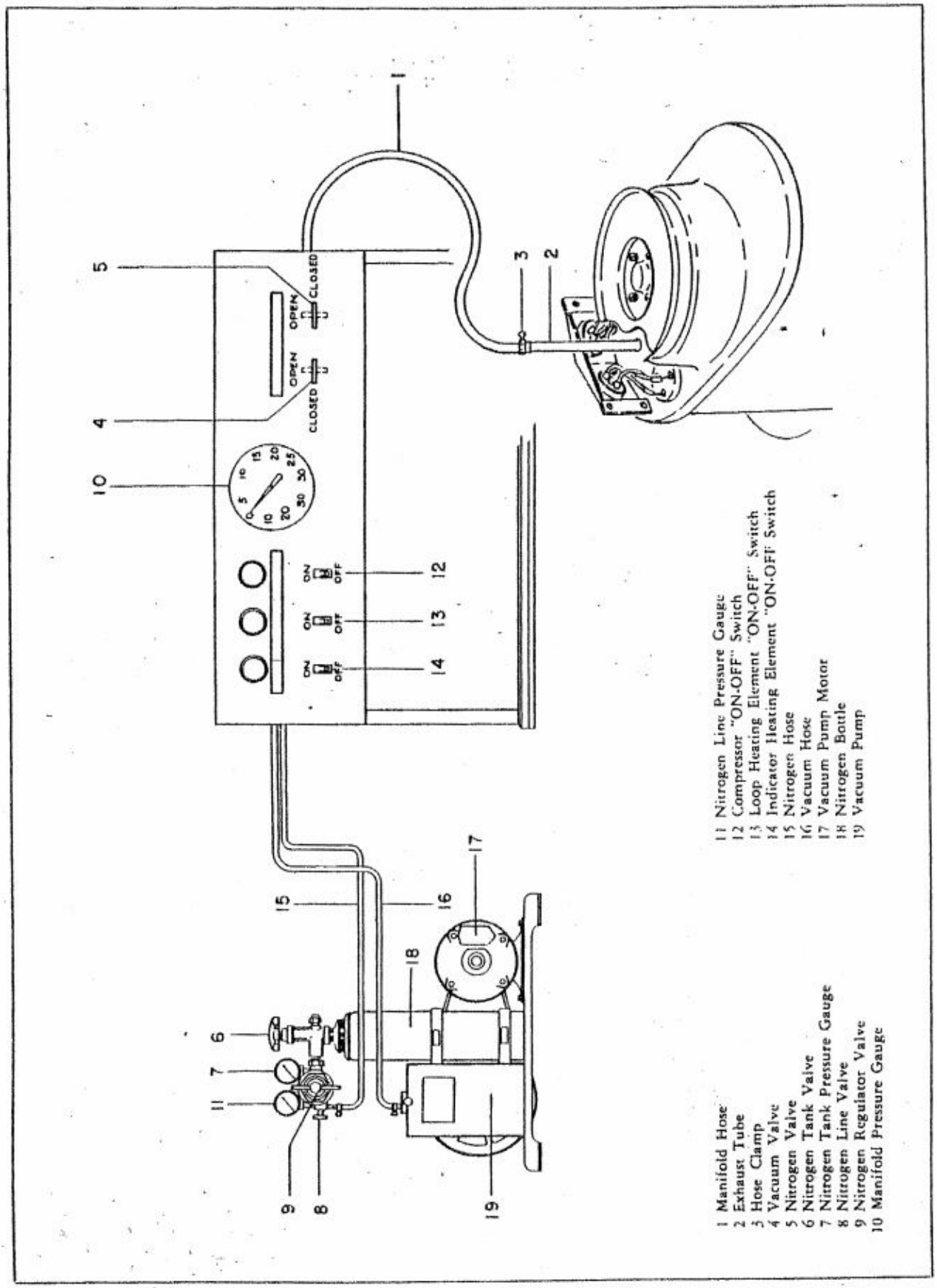

Figure 5-66. Evacuation and Leak Detection

1. Remove three screws (figure 5-67, reference 1) and three lock washers. (See reference 2.)

2. Lift off the rear cover assembly. (See reference 3.)

3. Pry off the snap ring and slide the insert out of the electrical connector receptacle (reference 4) and out of its frame.

4. If necessary to replace, remove the electrical connector receptacle from the back cover by removing the four screws (reference 5), four lock washers (reference 6), and the four nuts. (See reference 7.)

5. Unscrew the knob (reference 8) and the nut (reference 9) from the gear and shaft assembly. (See reference 10.)

6. Pry off the snap ring (reference 11) and remove the two washers. (See references 12 and 13.) Slide the shaft out of the bearing plate (reference 14) on the case cap and hermeflex assembly. (See reference 15.)

7. Remove the eight screws (reference 16) and lock washers (reference 17) and slide the rear clamp ring (reference 18) and the front clamp ring (reference 19) off the case.

8. Using any universal lacquer thinner, remove all of the paint from the exterior of the indicator.

9. Break the air seal by cutting off the exhaust tube (reference 20) below its sealed end. This is very important since it prevents solder from being sucked into the interior of the indicator when the main solder seal begins to soften.

(b) OPENING.

1. Turn the "INDICATOR" switch on the heating unit to the "ON" position and allow the unit to pre-heat for approximately five minutes.

2. While the unit is pre-heating, screw the special wrench (figure 5-68, reference 1) onto the spacer posts on the rear of the case cap and hermeflex assembly. Construction information for this wrench is shown in figure 5-69. This wrench provides a means of separating the case cap and hermeflex assembly from the case when the solder seal softens.

3. When the heating unit is ready, insert the indicator in the heating unit from the bottom as illus-

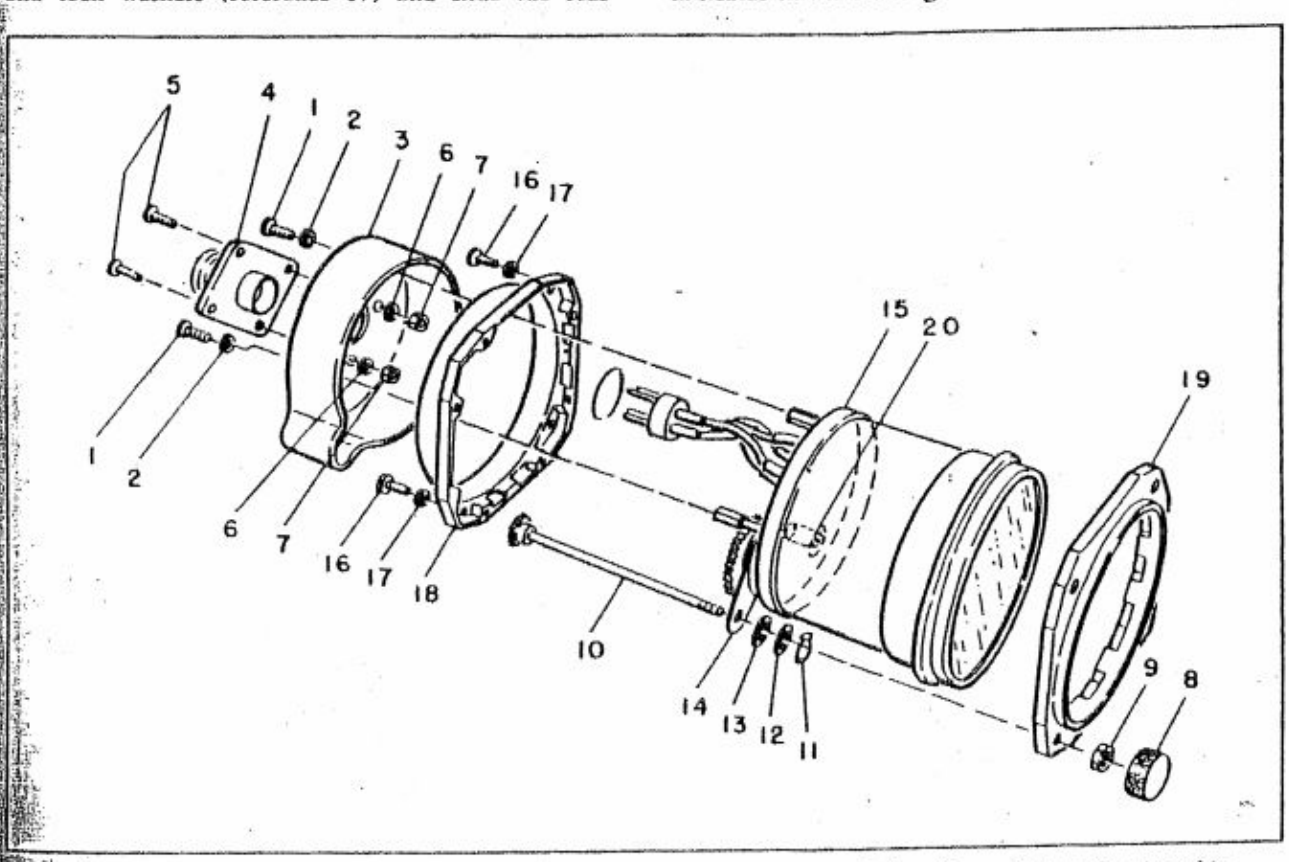

1 Screw
2 Lock Washer
3 Rear Cover
4 Electrical Connector Receptacle
5 Screw
6 Lock Washers
7 Nut
8 Knob
9 Nut
10 Gear and Shaft Assembly
11 Snap Ring
12 Spring Washer
13 Washer
14 Bearing Plate
15 Case Cap and Hermeflex Assembly
16 Screw
17 Lock Washer
18 Rear Clamp Ring
19 Front Clamp Ring
20 Exhaust Tube

Figure 5-67. Preliminary Disassembly Procedure

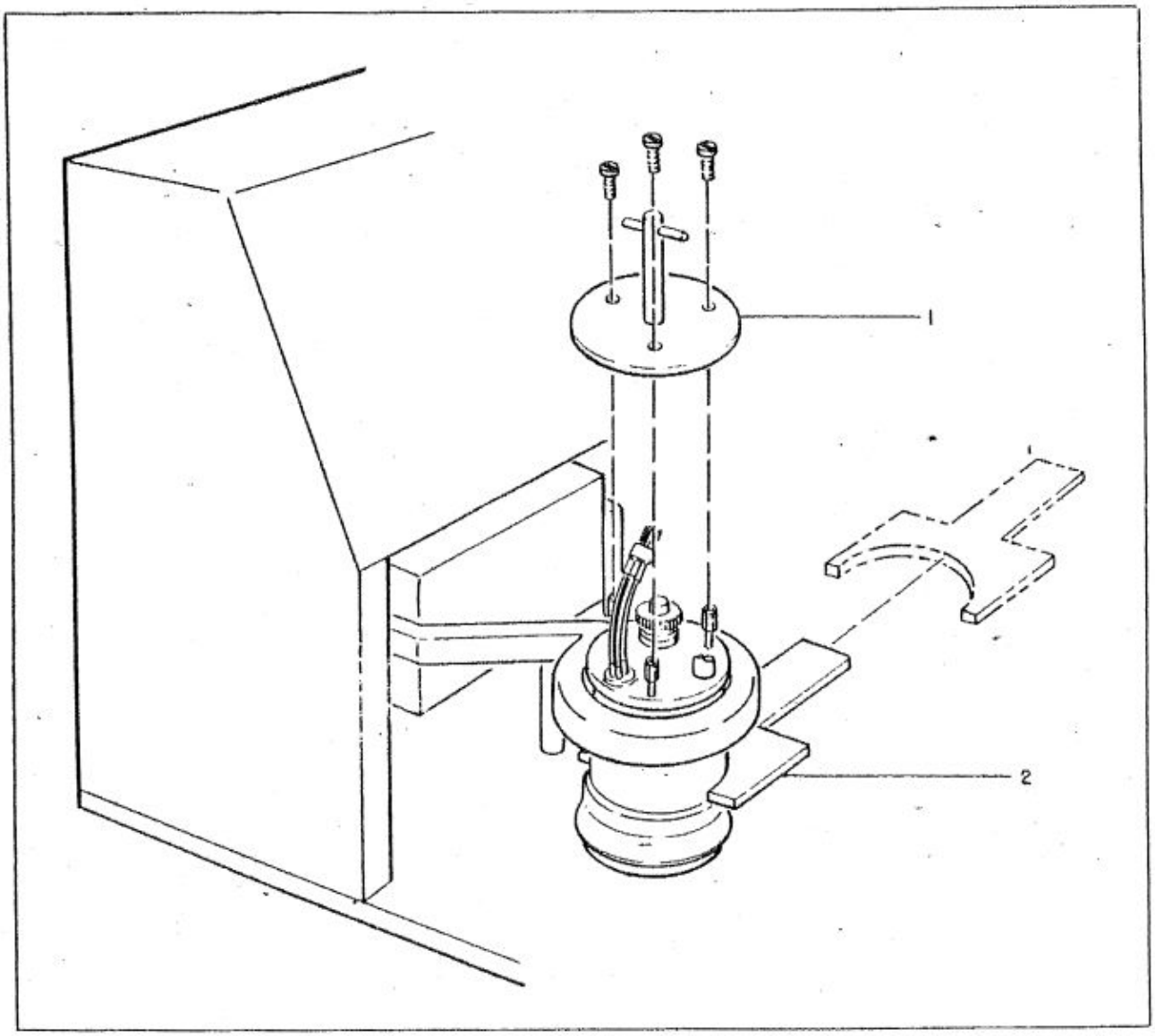

1 Special Wrench for Holding Case Cap and Hermeflex Assembly 2 Special Wrench for Holding Case

Figure 5-68. Opening Main Solder Seal

trated in figure 5-68. The main solder seal should begin to soften in approximately 10 minutes.

4. When the solder seal softens, grasp the case with the special wrench (reference 2) and hold the case securely in place while lifting the case cap and hermeflex assembly off.

5. Place the indicator assembly and the case assembly in a clean convenient place on the bench and allow the unit to cool before preceding with disassembly and overhaul.

(3) DISASSEMBLY PROCEDURE.

(a) REMOVAL OF BACK COVER, FRONT AND REAR CLAMP RINGS, AND DIAL ASSEMBLY.

1. Remove the pointer (figure 5-70, reference 1) which has a press fit on a tapered shaft. Extreme care must be taken when removing pointer to prevent damage to the shaft.

2. Remove the two inner dial screws (reference 2), and the inner dial. (See reference 3.)

3. Remove the four outer dial screws (reference 4) and remove the outer dial (reference 5), the dial gear (reference 6), and the spring washer. (See reference 7.)

4. Remove the fixed pointer (reference 8) by removing the [illegible] screws (reference 9) and lock washers. (See reference 10.)

(b) REMOVAL OF AUTOSYN ASSEMBLY.

1. To remove the autosyn, remove the three screws (figure 5-71, reference 1) and lock washers.

(See reference 2.) Lift the autosyn assembly out far enough to disengage the coupling assembly (reference 3) on the mounting plate. (See reference 8.)

2. Carefully unsolder the connecting leads. Mark the leads with some sort of identification for convenience in resoldering leads to the header.

3. Remove the three screws (reference 5), the lock washers (reference 6), and the flat washers (reference 7) and slide the autosyn out of the mounting plate. (See reference 8.)

(c) REMOVAL OF COUPLING, BEARING, AND PINION AND SHAFT ASSEMBLY.

1. Remove the groove pin (figure 5-72, reference 1) from the coupling (reference 2) and slide the coupling off the shaft.

2. Remove the snap ring (reference 3) and the flat washer (reference 4) from the shaft and slide the shaft and pinion assembly (reference 5) out of the mounting plate. (See reference 6.)

3. Remove the snap ring (reference 7) and the bearing washer (reference 8) and slide the ball bearing assembly (reference 9) out of the hermeflex assembly. (See reference 10.)

4. Remove the groove pin (reference 11) and slide the gear (reference 12) from the rear of the shaft on the hermeflex assembly.

(4) INSPECTION, CLEANING AND REPAIR.

(a) AUTOSYN.

1. Check the end play of the autosyn rotor. End play should be between 0.0025 and 0.0005 inches.

2. Check the d-c resistance of the autosyn as shown in Table 5-11, 5-11A, or 5-11B.

(b) REAR PLATE HERMEFLEX ASSEMBLY.

1. Inspect the header (figure 5-72, reference 13) for cracked or chipped glass and bent terminals. If the header is damaged, unsolder it and soft solder (63-37 rosin core solder) a new header in its place using a 200-watt soldering iron. Carefully examine the soft soldered joint around the header.

2. Check the action of the hermeflex by rotating the gear (reference 12) by hand. The gear must turn smoothly with no tendency to stick or bind. If the hermeflex is damaged, replace the entire unit which is silver-soldered to the rear plate.

3. Clean the gear with a glass fibre or hair brush. If the start gear is worn or damaged it should be replaced. Drive the groove pin (reference 11) out; slide the gear off the shaft and replace with a new gear. Secure the groove pin with glyptal when reassembling.

4. Unsolder the exhaust tube (reference 14) and soft-solder a new one in its place.

(c) CASE ASSEMBLY.

1. Examine the glass and the glass-to-metal

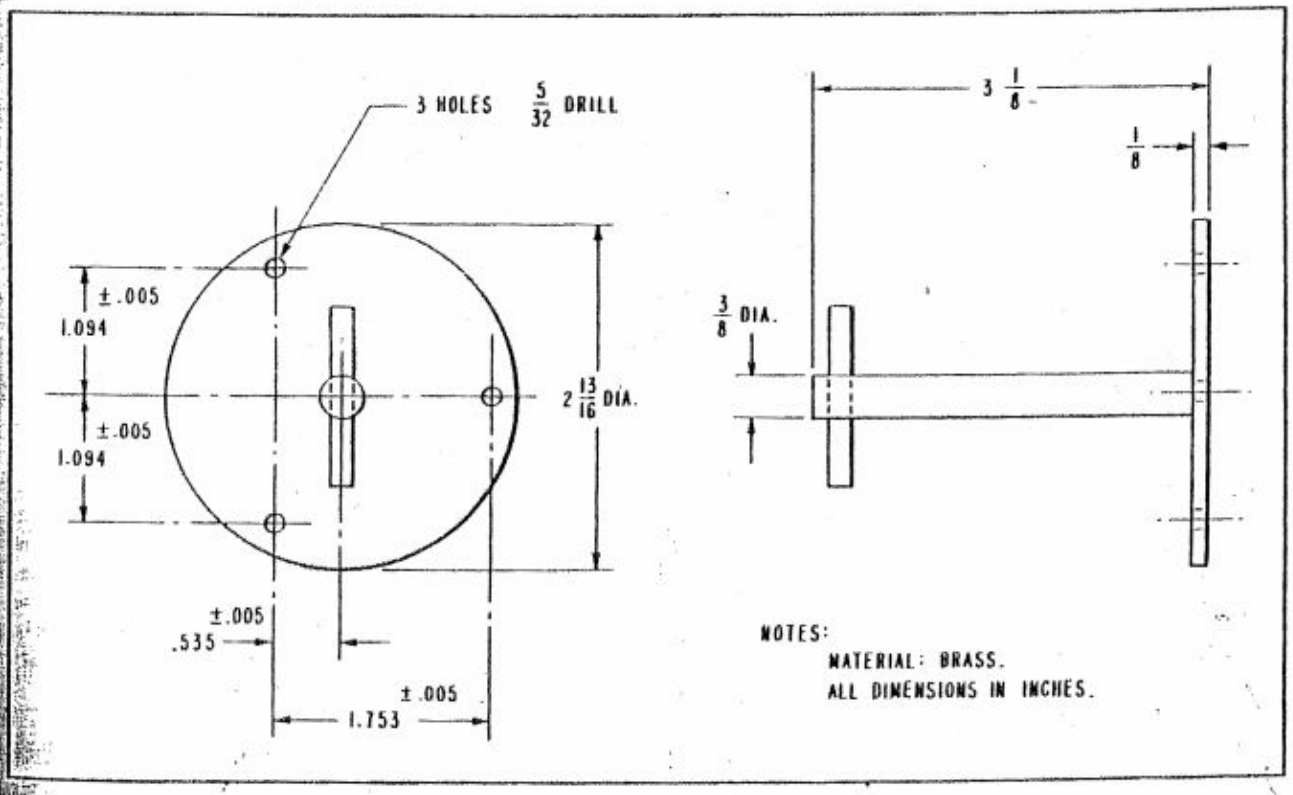

Figure 5-69 Special Wrench Construction

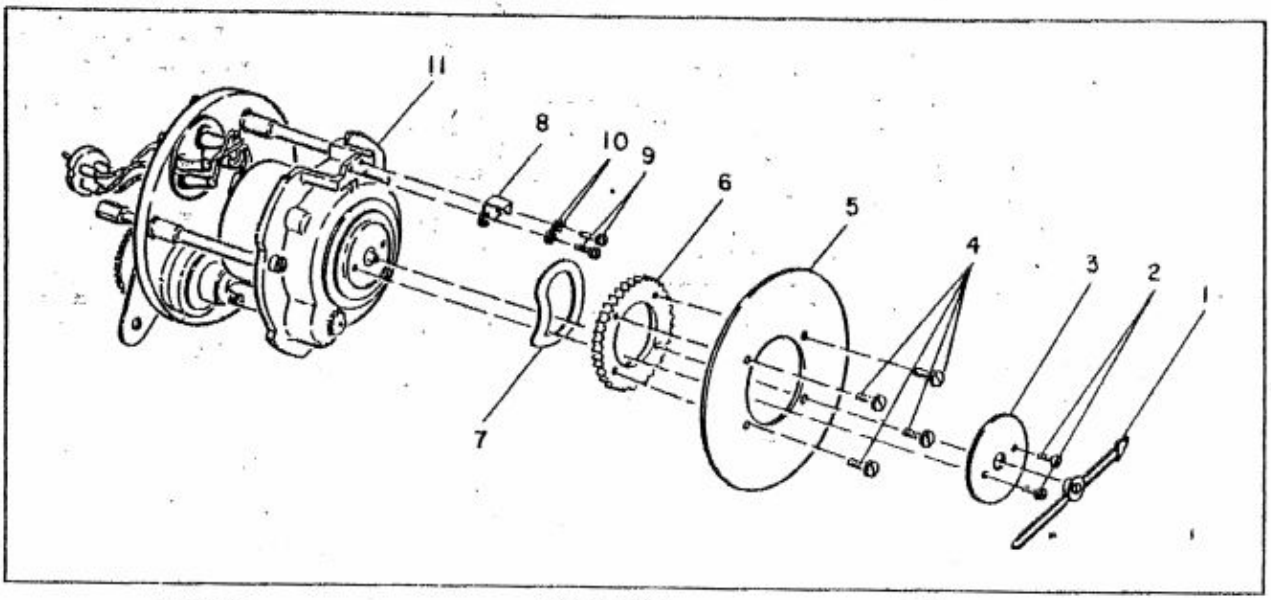

1 Pointer
2 Screws
3 Inner Dial
4 Screws
5 Outer Dial
6 Dial Gear
7 Spring Washer
8 Fixed Pointer
9 Screws
10 Lock Washers
11 Mounting Plate

Figure 5-70. Removal of Pointer, Fixed Pointer, Dials, and Dial Gears

bond for cracks. If there are any signs of damage, replace the case.

(d) DIAL AND POINTER.

1. Examine the finish on the dial and pointer. If they are damaged, replace with new parts.

(e) GEARS.

1. Clean the dial gear (figure 5-70, reference 6) and pinion (figure 5-72, reference 5) with a glass or fibre brush. A gear which is worn or damaged must be replaced. If the pinion gear is damaged, it will be necessary to replace the pinion, the shaft, and the groove pin as a unit. If the coupling (figure 5-72, reference 2) is worn or damaged, replace the coupling, the pinion, the shaft, and the groove pin as a unit.

(5) REASSEMBLY.

(a) MOUNTING PLATE.

1. Insert the shaft and pinion assembly (figure 5-72, reference 5) through the hole in the mounting plate. (See reference 6.)

2. Slide the flat washer (reference 4) and the snap ring (reference 3) on the shaft and secure the snap ring in the slot provided for it in the shaft.

3. Slide the coupling (reference 2) on the shaft and secure it in place with the groove pin. (See reference 1.) Apply a small amount of glyptal to the groove pin before inserting it in the groove provided in the coupling.

(b) CASE CAP AND HERMEFLEX ASSEMBLY.

1. Place the inner crank assembly in the hermeflex assembly so that the oscillating shaft in the hermeflex engages the hole in the inner crank assembly.

2. Place the bearing thrust washer (reference 8) and the snap ring (reference 7) in place, and secure the inner crank assembly in place in the hermeflex assembly.

3. Place the gear (reference 12) on the outer crank shaft and secure it in place with groove pin. (See reference 11.) Apply a small amount of glyptal to the groove pin before inserting it into the hole in the gear bushing.

(c) AUTOSYN.

1. Place the autosyn (figure 5-71, reference 9) in position in the mounting plate (reference 8) and secure it with the three screws (reference 5), three lock washers (reference 6) and three flat washers. (See reference 7.)

2. Solder the leads from the rear of the autosyn to the header in accordance with the wiring diagram, figure 8-13.

3. Secure the case cap and hermeflex assembly (reference 4) to the mounting plate with the three screws (reference 1) and the three lock washers. (See reference 2.) When securing the case cap and hermeflex assembly to the mounting plate, be sure that the groove pin in the inner crank shaft lines up properly with the coupling and that there is no excessive clearance between these parts.

(d) DIALS AND POINTER.

1. Secure the outer dial (figure 5-70, reference 5) to the dial gear (reference 6) with the four screws. (See reference 4.) Apply a small amount of glyptal to

the screws before assembling parts. Before tightening these screws, locate the dial with respect to the dial gear so that their inside diameters are concentric within 0.002 inch.

2. Place the spring washer (reference 7) over the bearing surface of the mounting plate.

3. Mount the dial gear and outer dial assembly over the spring washer and carefully mesh the teeth on the dial gear with the teeth on the pinion gear.

4. Place the inner dial (reference 3) in place over the dial gear and secure it in place with the two screws. (See reference 2.)

5. Secure the fixed pointer (reference 8) in place at the top of the mounting plate with the two screws (reference 9) and two lock washers. (See reference 10.) Apply a small amount of glyptal at assembly.

6. Connect the autosyn to an electrical zero transformer as shown in figure 5-73. Set the master autosyn for zero. With the autosyn locked at electrical zero, press the pointer onto the tapered shaft of the autosyn.

Note

When pressing the pointer on the shaft, the head of the pointer should be set at zero degrees for Indicators ID-90( )/ARN-6 and ID-91( )/ARN-6. It should be set at 270 degrees for Indicator ID-231( )/ARN-6.

If a new pointer is required, it must be reamed for a three-degree taper fit. The bottom side of the hub of the pointer must clear the dial by 1/16 inch. Bend the pointer tips to within 1/32 inch of the dial.

7. Check the tightness of the pointer by holding the indicator vertically with the pointer end down and suspend a five-pound weight from the hub of the pointer. Be careful not to bend the points or the shaft when making this test. The pointer should not show any signs of coming loose from the shaft.

8. Examine the entire reassembled unit for proper mechanical assembly, tightness of screws and nuts, and presence of lock washers. Also check the unit for complete absence of dirt, solder chips or any other foreign matter.

9. Examine the case assembly to be sure that it is clean. Carefully slip the reassembled unit into the case.

10. Mount the indicator assembly so that the dial is visible for testing.

(6) PRE-FINAL TESTS.

(a) The tests described in the following paragraphs should be made using the test circuit shown in figure 5-73. All tests should be made with a master transmitter, the indicator under test, and one other indicator in the circuit, except where otherwise specified. The master indicator should be an Air Force Type MO-40, or equivalent, that has been selected for accuracy. Mount the master transmitter so that the rotor may be positioned at the 15 degree points ac-

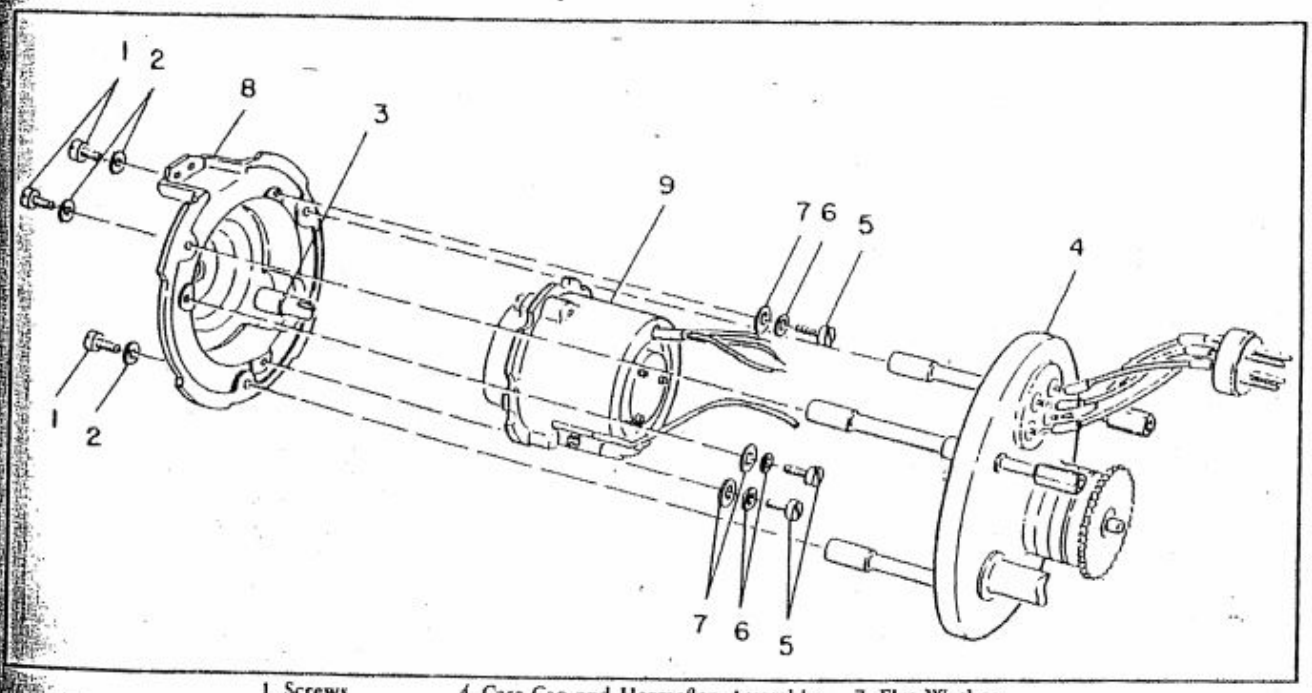

1 Screws
2 Lock Washers
3 Coupling
4 Case Cap and Hermeflex Assembly
5 Screw
6 Lock Washer
7 Flat Washer
8 Mounting Plate
9 Autosyn

Figure 5-71. Removal of Autosyn

curately. The power supply voltage should be set for 22 volts at 100 cycles.

(b) ELECTRICAL BREAKDOWN.

1. No insulation breakdown should occur when 550 volts at a commercial frequency is applied between any rotor or stator lead to ground.

(c) MECHANICAL ERROR.

1. Set the pointer of the indicator at zero degree for Indicators ID-90( )/ARN-6 and ID-91( )/ARN-6 or 270 degrees for Indicator ID-231( )/ARN-6. Rotate the outer dial and note the reading of the head of the pointer with respect to the tail of the pointer for every 45 degrees. The reading at the tail must always be 180 degrees ±0.5 degree from the reading at the head of the pointer. Repeat this test with the head of the pointer placed at 90 degrees [ID-90( )/ARN-6 and ID-91( )/ARN-6] or zero degree [ID-231( )/ARN-6].

(d) SPINNING.

1. This test should be made using only the indicator being tested and the master indicator in the circuit. With switch on the test set in the "CAL" position, set the master transmitter to zero degree. Turn the power off and set the master indicator to 165 degrees. Turn the power on. When the pointer comes to rest, turn the power off. Set the master transmitter to zero degree and turn the power on. There should be no spinning or continuous oscillation of the indicator pointer.

(e) ELECTRICAL ZERO.

1. With the switch set on "E-Z", the indicator should read within 0.5 degree of zero [ID-90( )/ARN-6 and ID-91( )/ARN-6] or 90 degrees [ID-231( )/ARN-6].

(f) SCALE ERROR AND FRICTION.

1. The master indicator should be indexed in increments of 15 degrees starting at zero degree. Two readings should be made for each transmitter setting; the first reading without the buzzer vibrating and the second reading with the buzzer vibrating the indicator to overcome the effect of friction. The difference between the first and second reading at any point should not exceed 1.0 degree. The difference between the second reading and the transmitter setting should not exceed ±0.5 degree for the zero-degree setting of the transmitter or ±1.25 degrees for all other settings [ID-90( )/ARN-6 and ID-91( )/ARN-6]. The difference between the second reading and the transmitter setting should not exceed 270 degrees ±0.5 degree for the zero setting of the transmitter or 270 degrees ±1.25

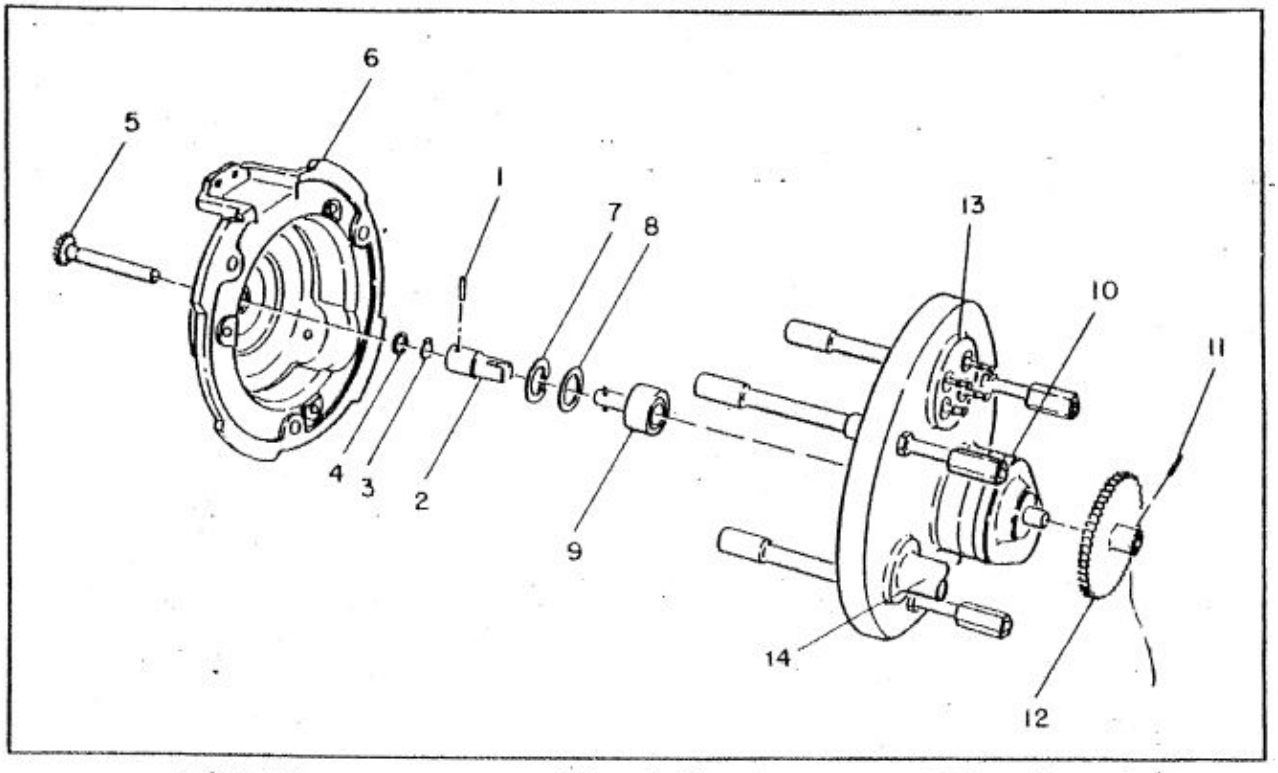

1 Groove Pin
2 Coupling
3 Snap Ring
4 Washer
5 Shaft and Pinion Assembly
6 Mounting Plate
7 Snap Ring
8 Washer
9 Ball Bearing Assembly
10 Hermeflex
11 Groove Pin
12 Gear
13 Header
14 Exhaust Tube

Figure 5-72. Removal of Pinion, Coupling, and Bearing Assembly

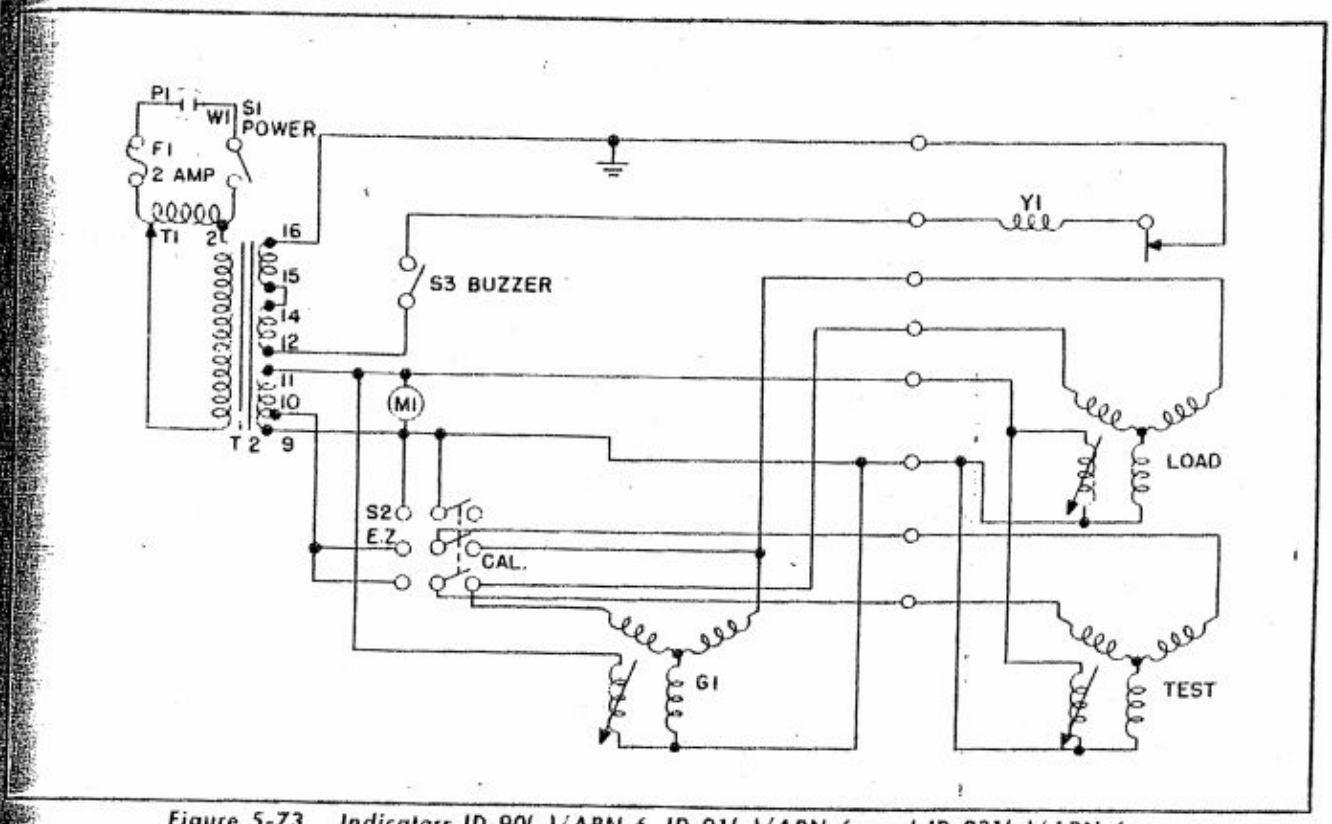

Figure 5-73. Indicators ID-90( )/ARN-6, ID-91( )/ARN-6, and ID-231( )/ARN-6 Test Setup, Schematic Diagram

degrees for all other settings. Repeat this test rotating the transmitter in the opposite direction. Note that the indicator rotates in the same direction as the transmitter. The pointer should rotate smoothly without jerking.

(7) RESEALING.

(a) Correctly position the case with respect to the case cap and hermeflex assembly.

(b) A soft solder (63-37 rosin core solder), air-tight seal should be made at the seam. Use a 200-watt soldering iron. Care must be taken to form a smooth air-tight fillet of solder at the seam and to avoid damage to the inner assembly as a result of overheating.

(c) After the assembly has been soldered, allow it to cool sufficiently and then brush the seam with a small gauge wire brush to remove all traces of rosin and leave the seal clean for closer inspection.

(8) EVACUATION AND LEAK DETECTION.

(a) After the main solder seal has been made and the unit inspected, soft solder a new exhaust tube in the case cap.

(b) Refer to the instructions given in paragraph 11d(7) for complete details on evacuation and leak detection.

(c) Refer to the instructions given in paragraph 11d(8) for complete details on refinishing the external surfaces of the indicator.

(9) FINAL TEST AND INSPECTION.

(a) Assemble the front clamp ring (figure 5-67, reference 19), and the rear clamp ring (reference 18) to the mounting flange of the case assembly with the eight screws (reference 16) and lock washers. (See reference 17.) Care must be taken when tightening these screws to insure that the bearing hole in the clamp ring is lined up with the bearing hole in the bearing plate on the hermeflex. The fixed pointer should be located midway between the two mounting screw holes in the front clamp ring.

(b) Insert the gear and shaft assembly (reference 10) through the hole in the bearing plate.

(c) Slip the spring washer (reference 12) and the flat washer (reference 13) over the shaft before inserting it into the front clamp ring (reference 19). Carefully mesh the pinion on the gear shaft (reference 10) with the hermeflex gear. Push the snap ring in place in the groove in the shaft.

(d) Screw the nut (reference 9) and the knob (reference 8) onto the gear shaft. (See reference 10.) Lock the knob in place by tightening the nut against it. Rotate the outer dial by turning the knob to insure that it turns freely. The torque required at the knob to rotate the dial should be between 4 and 10 inches-ounces. The backlash between the dial and the knob shall not exceed 45° as measured at the knob.

(e) Solder the leads to the outside of the headers

and to the receptacle in accordance with the wiring diagram shown in figure 8-13. Check all soldered connections and coat them with fungicidal varnish Interchemical No. IB200457 (Interchemical Corp., Newark, N. J.).

(f) Assemble the back cover assembly to the indicator with the three screws (reference 1) and lock washers. (See reference 2.)

SECTION VI

SUPPLEMENTARY DATA

1. TECHNICAL SUMMARY.

a. TUBE COMPLEMENT.—The electron tubes used in Radio Compass AN/ARN-6 and their functions are listed in tables 6-1 and 6-2.

Table 6-1. Tube Complement for R-101/ARN-6

Reference Symbol	*Type Designation*	*Function*
V-101	JAN-12SK7	Loop Amplifier
V-102	JAN-12SX7GT	Modulator
V-103	JAN-12SK7	1st RF Amplifier
V-104	JAN-12SK7	2nd RF Amplifier
V-105	JAN-12SY7	1st Detector
V-106	JAN-12SK7	1st IF Amplifier
V-107	JAN-12SK7	2nd IF Amplifier
V-108	JAN-12SW7	2nd Detector-AF Amplifier-AVC
V-109	JAN-12SX7GT	RF Oscillator-Tone Oscillator
V-110	JAN-12SX7GT	Beat-Frequency Oscillator-Audio Driver
V-111	JAN-26A7GT	Audio Output
V-112	JAN-26A7GT	Audio Output
V-113	JAN-12SX7GT	Tuning Meter Amplifier
V-114	JAN-12SK7	Compass Amplifier
V-115	JAN-2050	Loop Control
V-116	JAN-2050	Loop Control

Table 6-2. Tube Complement for R-101A/ARN-6

Reference Symbol	*Type Designation*	*Function*
V-101	JAN-12SK7	Loop Amplifier
V-102	JAN-12SX7GT	Modulator
V-103	JAN-12SK7	1st RF Amplifier
V-104	JAN-12SK7	2nd RF Amplifier
V-105	JAN-12SY7	1st Detector
V-106	JAN-12SK7	1st IF Amplifier
V-107	JAN-12SK7	2nd IF Amplifier
V-108	JAN-12SW7	2nd Detector-AF Amplifier-AVC
V-109	JAN-12SX7GT	RF Oscillator-Tone Oscillator
V-110	JAN-12SX7GT	Audio Driver and Tuning Meter
V-111	JAN-26A7GT	Audio Output
V-112	JAN-26A7GT	Audio Output
V-113	JAN-12SX7GT	Tuning Meter and Beat-Frequency Oscillator
V-114	JAN-12SK7	Compass Amplifier
V-115	JAN-2050	Loop Control
V-116	JAN-2050	Loop Control

b. FREQUENCY RANGE.—Radio Compass AN/ARN-6 covers a frequency range from 100 to 1750 kilocycles.

c. TUNING BANDS.—Radio Compass AN/ARN-6 has four bands covering the frequency range from 100 to 1750 kilocycles as follows:

Band one ..... 100 to 200 kc
Band two ..... 200 to 410 kc
Band three ..... 410 to 850 kc
Band four ..... 850 to 1750 kc

d. PRESET FREQUENCIES.

(1) There are two intermediate frequency channels used in Radio Compass AN/ARN-6.

(a) Channel one—455 kc used for band one.

(b) Channel two—142.5 kc used for bands two, three, and four.

(2) There are two types of CW reception used in Radio Compass AN/ARN-6.

(a) A beat-frequency oscillator (BFO) is used for CW reception when the equipment is used in "ANT." or "LOOP" operation. A frequency of 455.9 kc is used for band one and 143.4 kc for bands two, three, and four.

(b) A tone oscillator is used for CW reception when the equipment is used in "COMP-ADF." operation. The tone oscillator is tuned to 900 cycles per second and modulates the CW signal as it passes through the IF channels.

e. ELECTRICAL CHARACTERISTICS OF ANTENNAS.

(1) NONDIRECTIONAL ANTENNA. — The nondirectional antenna input circuit of the receiver is designed to operate from a low capacity transmission line connected through the proper matching circuit, to a conventional 40 to 100-micromicrofarad antenna, having an effective height of from 0.05 to 0.5 meter.

(2) LOOP ANTENNA.—The loop antenna is a low impedance iron core loop of nine turns, electrically

center-tapped by means of a shunt coil of 12 turns and electrostatically shielded. The loop cord connecting the loop to the receiver is shielded and has a distributed capacitance of 135 micromicrofarads $^{+15}_{-6}$ micromicrofarads between terminals B and C.

f. OUTPUT IMPEDANCE.—The output impedance of Radio Compass AN/ARN-6 is 300 ohms. This low output impedance is designed for the use of Headsets HS-33 or HS-38.

g. VOLTAGE INPUTS FOR STANDARD OUTPUT OF 50 MILLIWATTS.—Voltage measurements made with function switch in "ANT." operation, "AUDIO" control turned fully clockwise, and the input signal 30 per cent modulated at 400 cycles per second fed through a 50-micromicrofarad capacitor as a dummy antenna. The sensitivity control set for a standard 4:1 signal to noise ratio.

Table 6-3. Voltage Inputs for Standard Output of 50 Milliwatts

Volts	*Input Frequency*	*Measurement Point*
8 μv	850 kc	Pin 4 of V-103 1st RF Amplifier
50 μv	850 kc	Pin 4 of V-104 2nd RF Amplifier
250 μv	850 kc	Pin 8 of V-105 1st Detector
2.5K μv	455 kc	Pin 4 of V-106 1st IF Amplifier
2K μv	142.5 kc	Pin 4 of V-106 1st IF Amplifier
40K μv	455 kc	Pin 4 of V-107 2nd IF Amplifier
45K μv	142.5 kc	Pin 4 of V-107 2nd IF Amplifier
.15 volts	455 kc	Pin 5 of V-108 2nd Detector
.15 volts	142.5 kc	Pin 5 of V-108 2nd Detector
.06 volts	400 cps	Pin 2 of V-108 1st Audio
.3 volts	400 cps	Pin 4 of V-110 Audio Driver

h. POWER CONSUMPTION.—The average power required is four amperes at 26.5 volts DC. Power consumption under specific operation conditions are listed in the following table (table 6-4):

i. PERFORMANCE CHARACTERISTICS. — Normal and minimum performance characteristics are given in tables 6-5 or 6-6 and 6-7:

Table 6-4. Power Consumption

Conditions of Operation	*Volts Input*	*DC Amps.*
Continuous Operation on "ANT." 100 μv Signal	24 26.5 30	3.28 3.5 3.8
Continuous Operation on "COMP." or "ADF," (Signal Tuned in Bearing Taken)	24 26.5 30	3.82 4.1 4.5
Continuous Operation on "COMP." "or ADF" (Loop Turning by Thyratrons)	24 26.5 30	3.71 4.0 4.4
Continuous Operation on "LOOP" (Loop Stationary)	24 26.5 30	3.72 3.95 4.31
Continuous Operation on "LOOP" (Loop Rotating Fast by "LOOP L-R" Switch 100 μv Signal)	24 26.5 30	3.81 4.1 4.48
Continuous Operation on "LOOP" (Loop Rotating Slow by L-R Switch)	24 26.5 30	3.7 4.0 4.32
Band Switch Operating (Average) (Set in "COMP." Pos.)	26.5	.5a increase

Table 6-5. Normal Performance Characteristics

Test Point	*Band 1*			*Band 2*			*Band 3*			*Band 4*		
Test Frequency (kc)	105	150	195	205	300	400	420	620	840	870	1300	1700
Ant. Sens (μv)	5.7	5	4.9	4.5	4.5	5	4	4	4.5	3.1	3.4	3.4
Ant. Noise Level (mw)	20	25	35	10	30	35	10	20	25	15	20	20
Loop Sensitivity (μv per meter)	96	70	65	70	53	42	44	42	32	38	32	28
Loop Noise Level (mw)	13	15	15	30	35	20	30	15	13	8	10	5
IF Rej. Ratio (x1000)	*	*	500	125	250	400	300	300	500	500	500	500
Image Rej. Ratio (x1000)	*	*	500	*	*	500	500	500	250	500	100	30
Compass Accuracy	±1.0° at all frequencies and field strengths from 25 μv per meter up											
Compass Sensitivity	25 μv per meter or better											
Speed of Taking Bearings	4 to 7 seconds for 175° (45-25 degrees per second)											
Hunting	0° to ±1°											
AVC Action	μv	5	10	50	100	500	1M	5M	10M	50M	100M	250M
Test Freq. 850 kc 30% Mod.	mw	150	190	310	340	440	480	600	610	625	640	650

ANT. Selectivity	Resonant Input Multiplied By	2	10	100	1M	10M
Test Freq. 840 kc.	Band Width in Kc (IF=142.5 kc)	3.5	5.6	8	10.5	14
Test Freq. 195 kc.	Band Width in Kc (IF=455 kc)	2.2	4.4	8	11.6	15

* Too great to measure

Table 6-6. Normal Performance Characteristics

Test Point	*Band 1*			*Band 2*			*Band 3*			*Band 4*		
Test Frequency (kc)	105	150	195	205	300	400	420	620	840	870	1300	1700
Ant. Sens. (μv)	5.4	5.4	5.3	4.5	4.8	4.5	4.3	4.3	4.5	2.5	3	3
Ant. Noise Level (mw)	5 to 30	5 to 30	5 to 30	2 to 20	3 to 25	3 to 25	1 to 10	2 to 15	2 to 20	2 to 20	5 to 30	5 to 30
Loop Sensitivity (μv per meter)	90 to 125	75 to 100	65 to 90	60 to 85	40 to 65	45 to 75	40 to 60	35 to 50	30 to 65	25 to 50	25 to 45	20 to 35
Loop Noise Level (mw)	3 to 30	4 to 35	4 to 35	5 to 35	3 to 35	4 to 25	3 to 35	2 to 20	1 to 10	2 to 25	5 to 25	1 to 25
IF Rej. Ratio (x1000)	*	*	500	100 to 225	150 to 350	200 to 600	175 to 500	500	500	500	500	500
Image Rej. Ratio (x1000)	*	*	500	*	*	500	500	500	300 to 500	500	100 to 200	30 to 60
Compass Accuracy	±1.0° at all frequencies and field strengths from 25μv per meter up											
Compass Sensitivity	25 μv per meter or better											
Speed of Taking Bearings	4.5 to 6 seconds for 175°											
Hunting	0° to ±1°											
AVC Action	μv	5	10	50	100	500	1M	5M	10M	50M	100M	250M
Test Freq. 850 kc 30% Mod.	mw	50 to 125	80 to 170	160 to 250	200 to 300	270 to 350	290 to 370	350 to 425	370 to 435	420 to 480	430 to 500	450 to 600

ANT. Selectivity	Resonant Input Multiplied By	2	10	100	1M	10M
Test Freq. 840 kc.	Band Width in Kc (IF = 142.5 kc)	3.5	5	7	9	11
Test Freq. 195 kc	Band Width in Kc (IF = 455 kc)	2.2	4.4	8	11.5	15

* Too great to measure.

Table 6-7. Minimum Performance Characteristics

Test Point	*Band 1*			*Band 2*			*Band 3*			*Band 4*		
Test Frequency (kc)	105	150	195	205	300	400	420	620	840	870	1300	1700
Ant. Sens. (μv)	Not worse than 15 μv at any point											
Ant. Noise Level (mw)	Not less than .1 mw or more than 75 mw											
Loop Sensitivity (μv/m)	Not worse than 150 μv m on bands 2, 3 and 4											
Loop Noise Level (mw)	Not less than .1 mw or more than 75 mw											
IF Rej. Ratio	Not less than 50K to 1											
Image Rej. Ratio	Not less than 100,000 to 1						40,000 to 1			10,000 to 1		
Compass Accuracy	±2° at all freq. and field strengths											
Compass Sensitivity	Not worse than 50 μv per meter at any point											
Speed of Taking Bearings	Not worse than 25° sec.											
Hunting	Not more than ±2°											
AVC Action Test Freq. 840 kc 30% Mod.*												

* Should not reach max output with less than 1000 μv input and output for high input should not drop more than 2 db from max.

Table 6-7. Minimum Performance Characteristics (Continued)

ANT. Selectivity	Resonant Input Multiplied By	.2	10	100	1M	10M
Test Freq. 840 kc	Band Width in Kc (IF = 142.5 kc)	6.0	8.5	12	15	20
Test Freq. 195 kc	Band Width in Kc (IF = 455 kc)	4.5	8.0	12	16	25

Table 6-8. American and British Terminology Glossary

United States	*British Equivalent*	*Definition*
Antenna	Aerial	A conductor consisting of a wire supported in the air for directly transmitting or receiving electrical waves.
Aircraft	Aircraft	Any weight-carrying device designed to be supported by the air, either by buoyancy or by dynamic action. In Britain used only as a collective plural and in the United States, as either singular or a collective plural.
Airplane	Aeroplane	A mechanically driven aircraft, heavier than air, fitted with fixed wings and supported by the dynamic action of the air.
Battery, storage	Storage battery or accumulator	A battery of leakproof design which will not discharge its liquid contents during violent maneuvers.
Beacon, radio range	Radio track beacon	A radio transmitter supplying directive radio waves that provide a means of keeping aircraft on the proper course.
Conduit or electrical tubing	Conduit	A tube for receiving and protecting electric wires or cables.
Controls, air, cable, or flight	Flying controls	The means employed to operate the control surfaces of an aircraft.
Copilot	Second pilot	The assistant to the pilot of an aircraft.
Course	Track angle	The direction over the surface of the earth, with respect to true north, which an aircraft flies.
Direction finder radio, or automatic direction finder	Radio direction finder (R.D.F.), radio compass, or steering director	A radio instrument which, if once tuned to a station, points continuously and automatically to the station.
Documents, classified	Protected papers	All documents which are classified for protection to a greater or lesser degree from the general public.
Drift	Drift-angle	The angle between the heading and the track.
Engine	Aero-engine	An engine used to provide the motive power for an aircraft.
Field, landing	Landing ground	A field of such a size and nature as to permit of aircraft landing and taking off in safety.
Gasket	Gasket, joint, or washer	A sheet or ring of packing used for engine heads, pipe joints, and similar purposes.
Generator	Generator or dynamo (obsolescent)	A machine by which mechanical energy is changed into electrical energy.
Ground	Ground or earth	The connection made in grounding an electrical circuit.
Gyro-directional or directional indicator	Directional gyro, direction indicator, or gyroscopic . . . turn indicator	Any instrument employing a gyroscope for indicating any change in the direction of the aircraft in azimuth from a straight course.
Heading	Course	The angular direction of the longitudinal axis of an aircraft with respect to true north.
Interphone	Intercommunication or intercom (slang)	A system of communication between different stations on the same aircraft.
Inverter	Motor generator (d.c. to a.c.)	A motor coupled to a generator for transforming electric currents.
Left	Port	Situated to the left, looking in the direction of motion of an aircraft.

Table 6-8. American and British Terminology Glossary (Continued)

United States	*British Equivalent*	*Definition*
Loop, radio or loop antenna	Loop aerial	A specified number of turns of wire located in the wings or wound around the fuselage of an airplane. Small portable loops on a rectangular frame are also used.
Mast, radio	Rod aerial	A mast attached to an aircraft which serves as part of the radio antenna structure.
Meter, drift or drift indicator	Drift sight	An instrument for measuring the drift angle.
Mile, sea	Sea mile or admiralty mile	A measure of distance equal in the United States to 6080.20 feet and in Britain to 6080 feet. One knot is 1 sea mile per hour.
Navigation, air or aerial navigation	Avigation	The guidance of craft through the air in accordance with previous calculations. "Avigation" has been used, but is considered unnecessary in the U.S.
Nut, self-locking or Elastic stop nut (trade name)	Self-locking nut or Simmonds nut (trade name)	A nut so constructed that it locks in place when tightened.
Operator, radio	Wireless operator	The operator of a radio sending and receiving set.
Plug or attachment plug	Plug	A removable male fitting for making electrical connections by insertion in a receptacle or body.
Post, binding	Terminal	A metallic post attached to the electrical apparatus for convenience in making connections.
Radio	Wireless	A device for the transmission or reception of signals by means of electric waves.
Radio, directional	Direction finder or directional wireless	Equipment for finding the azimuth of a distant transmitter.
Right	Starboard	Situated to the right, looking in the direction of an aircraft.
Screw, fillister	Cheese-headed screw	A screw whose head is cylindrical and slotted with a convex or flat top.
Setscrew or headless setscrew	Grub screw	A headless machine screw screwed through one part tightly upon another part to prevent relative movement.
Shield or screen (ignition)	Ignition harness or screening	A device which protects other electrical apparatus from being affected by magnetic fields set up by the ignition system.
Socket, plughole, or jack	Socket	A fixed female fitting for making electrcal connections by the insertion of a plug.
Track or course	Track	The projection of the path of the center of gravity of an aircraft onto the earth's surface.
Tube	Valve	A radio electron tube.
Wrench	Wrench or spanner	An instrument for exerting a twisting load, as in turning bolts or nuts.
Wire, safety or lock wire	Safety wire or lock wire	A wire used to secure a small part so that it cannot loosen.

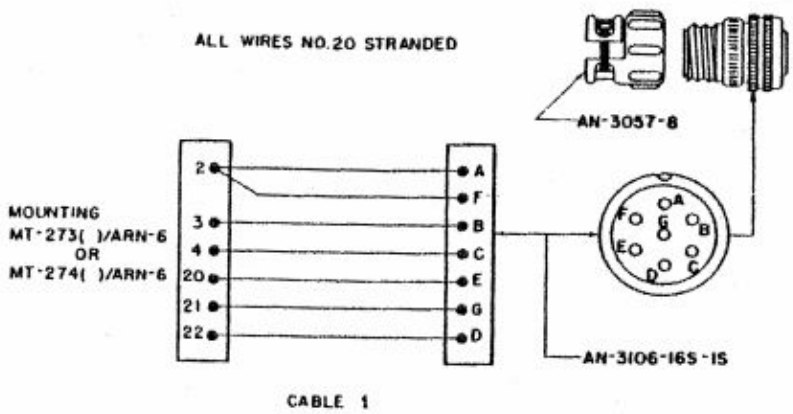

LOCATION OF LOOP ON AIRCRAFT	LOCATION OF NON-DIRECTIONAL ANTENNA	CONNECT WIRES
TOP	TOP	C-4 E-20 B-3 F-2
BOTTOM	BOTTOM	C-3 E-20 B-4 F-2
TOP	BOTTOM	C-4 E-2 B-3 F-20
BOTTOM	TOP	C-3 E-2 B-4 F-20

Figure 6-1. Cable No. 1

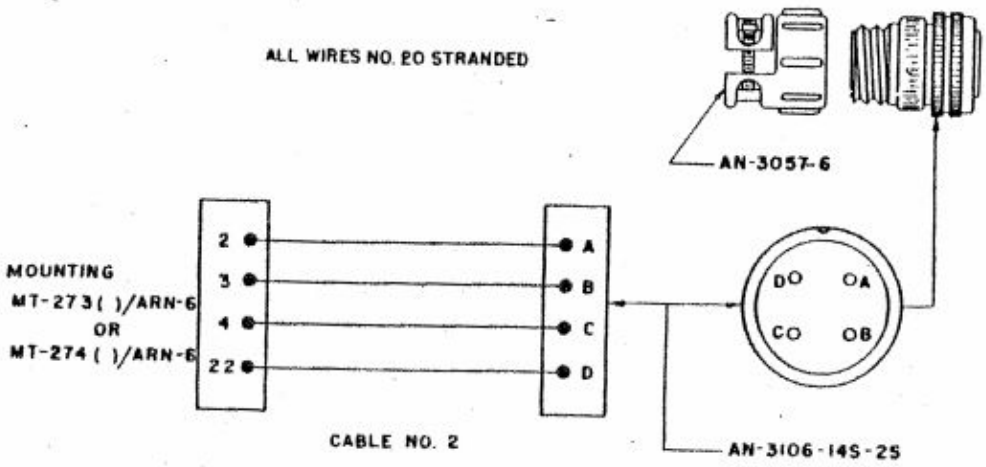

Figure 6-2. Cable No. 2

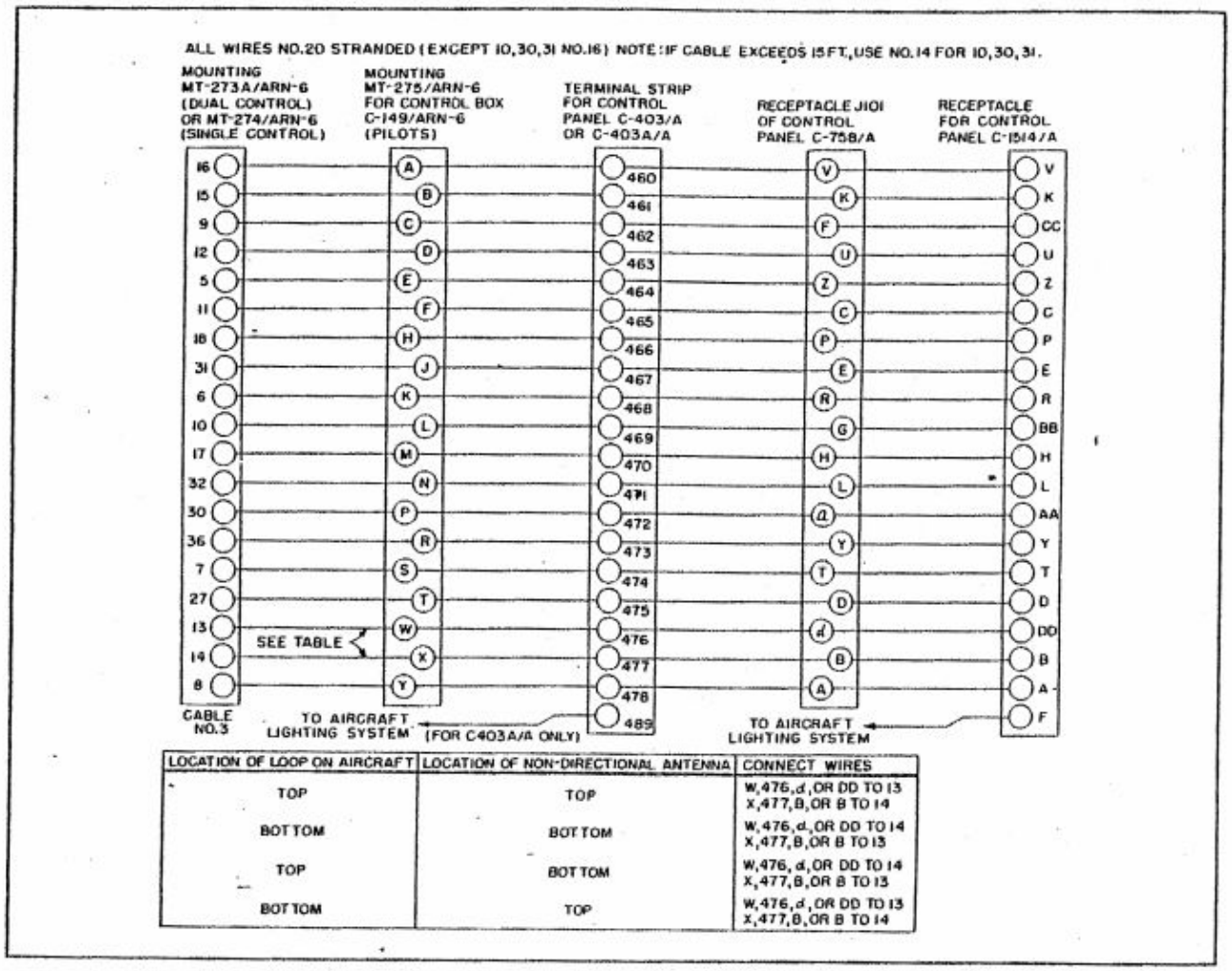

LOCATION OF LOOP ON AIRCRAFT	LOCATION OF NON-DIRECTIONAL ANTENNA	CONNECT WIRES
TOP	TOP	W,476,d,OR DD TO 13 X,477,B,OR B TO 14
BOTTOM	BOTTOM	W,476,d,OR DD TO 14 X,477,B,OR B TO 13
TOP	BOTTOM	W,476,d,OR DD TO 14 X,477,B,OR B TO 13
BOTTOM	TOP	W,476,d,OR DD TO 13 X,477,B,OR B TO 14

Figure 6-3. Cable No. 3

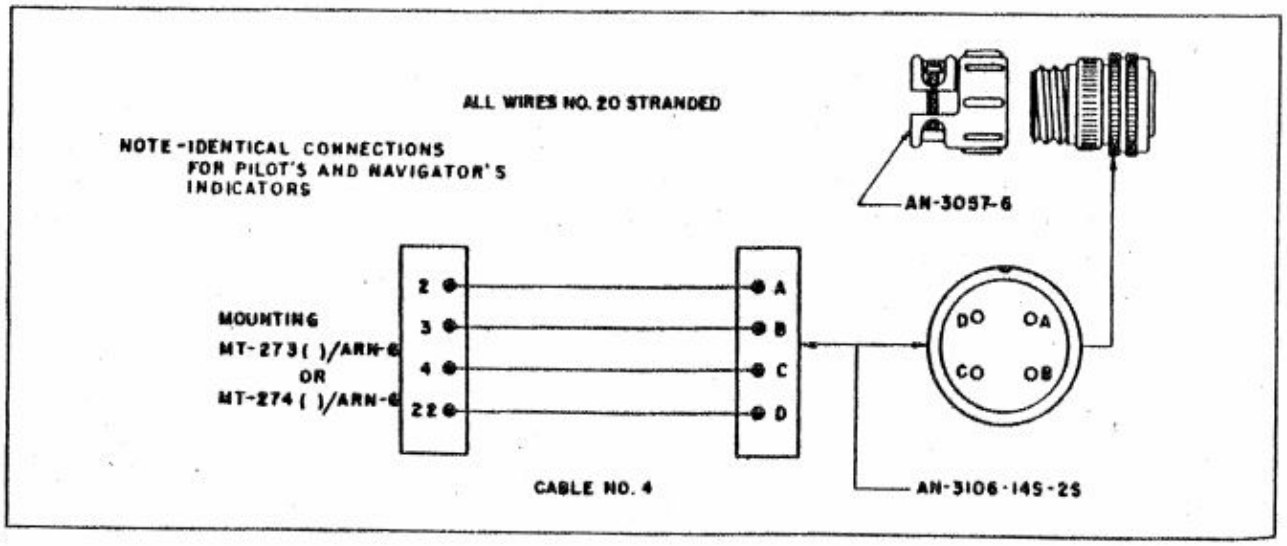

Figure 6-4. Cable No. 4

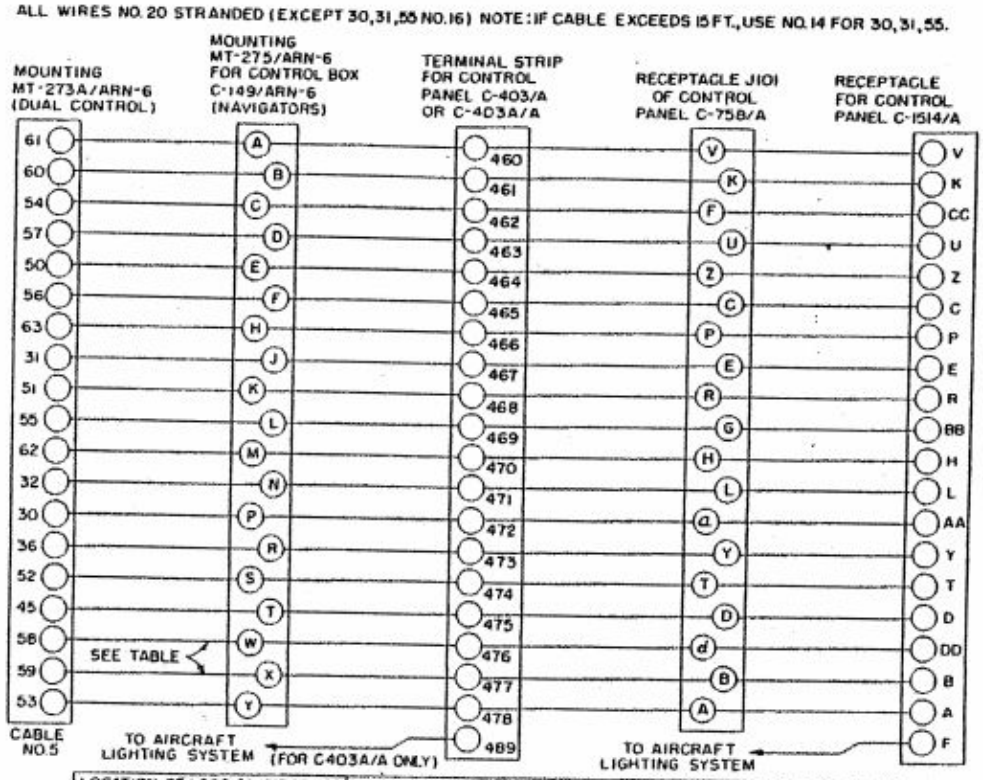

LOCATION OF LOOP ON AIRCRAFT	LOCATION OF NON-DIRECTIONAL ANTENNA	CONNECT WIRES
TOP	TOP	W,476,d,OR DD TO 58 X,477,B,OR B TO 59
BOTTOM	BOTTOM	W,476,d,OR DD TO 59 X,477,B,OR B TO 58
TOP	BOTTOM	W,476,d,OR DD TO 59 X,477,B,OR B TO 58
BOTTOM	TOP	W,476,d,OR DD TO 58 X,477,B,OR B TO 59

Figure 6-5. Cable No. 5

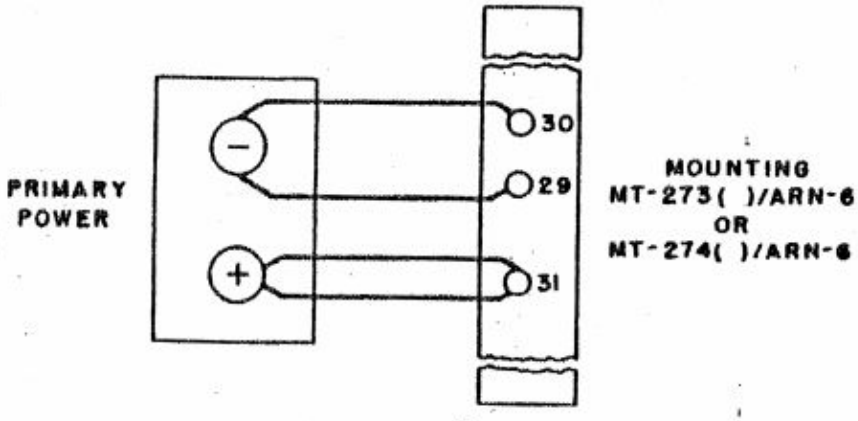

CABLE NO. 6

NOTE: TWO NO. 16 WIRES ARE USED FOR EACH POWER LEAD.

Figure 6-6. Cable No. 6

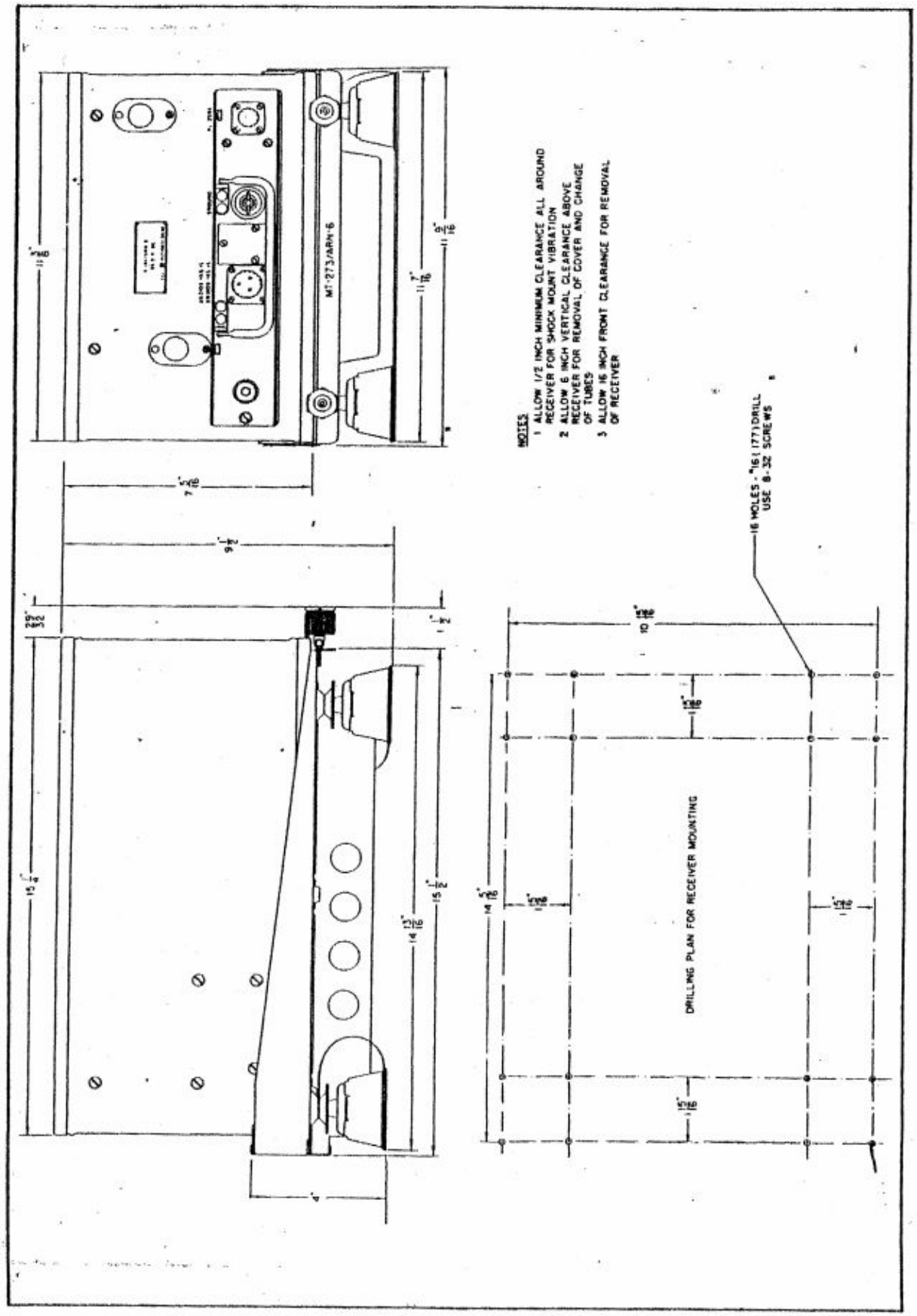

Figure 6-7. Radio Compass Unit R-101/ARN-6 and Mounting MT-273A/ARN-6, MT-273B/ARN-6, or MT-274/ARN-6, Outline Drawing

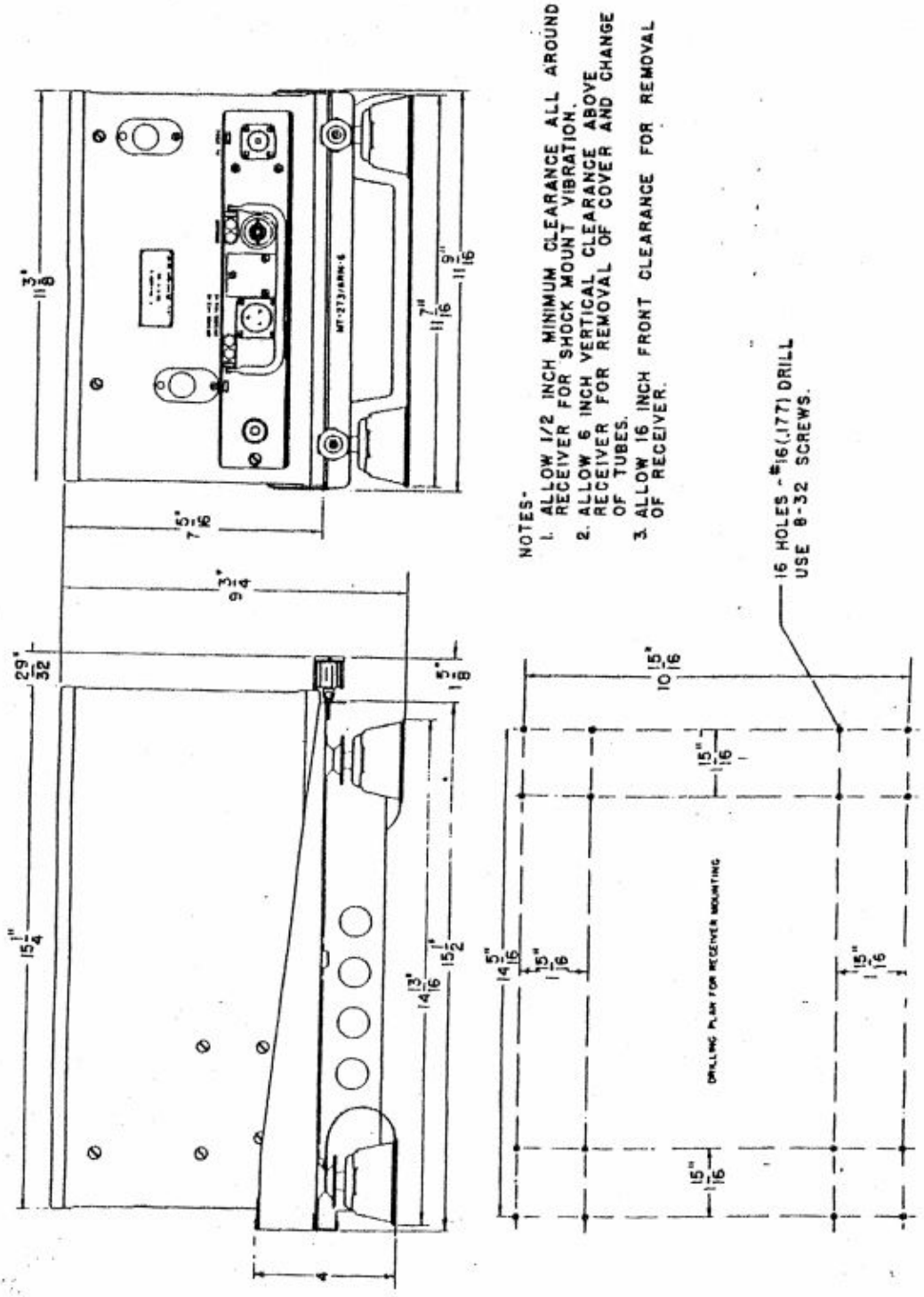

Figure 6-8. Radio Compass Unit R-101A/ARN-6, and Mountings MT-273( )/ARN-6 or MT-274( )/ARN-6, Outline Drawing

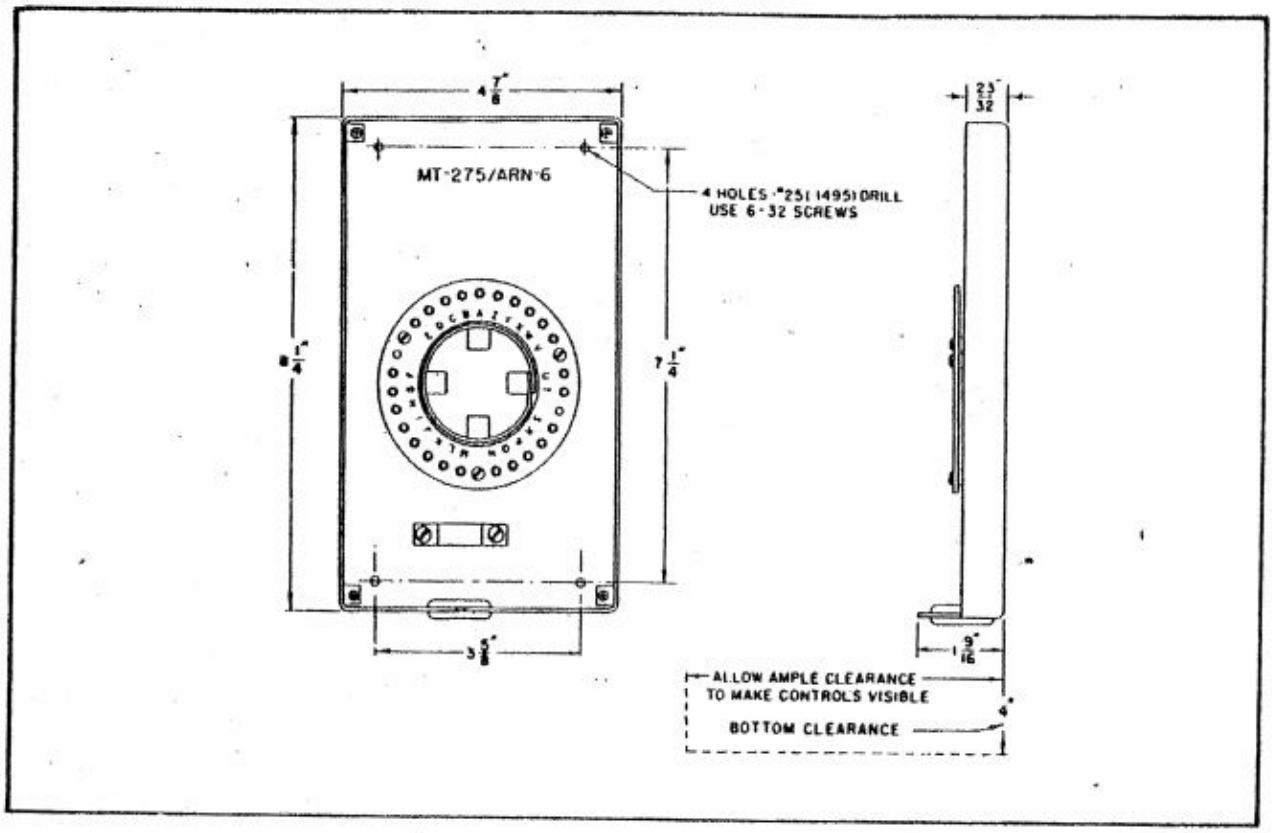

Figure 6-9. Mounting MT-275/ARN-6, Outline Drawing

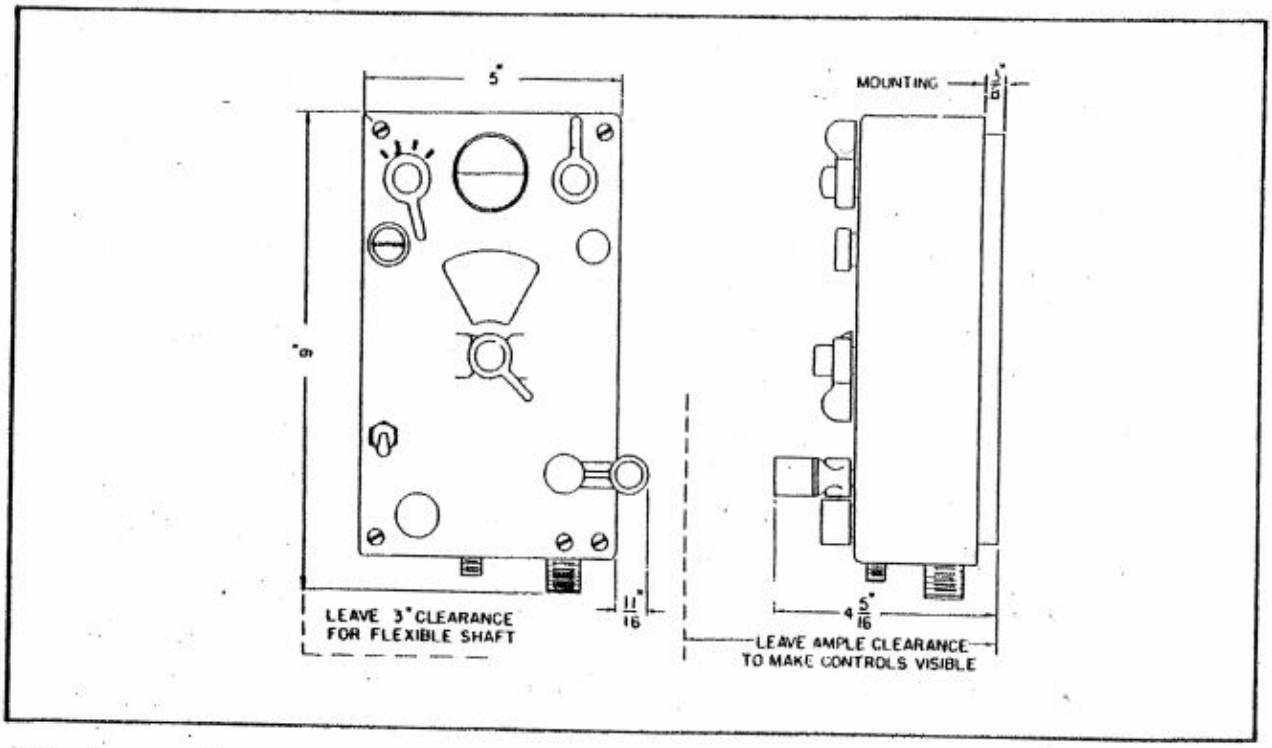

Figure 6-10. Control Box C-149/ARN-6 or C-149A/ARN-6, Outline Drawing

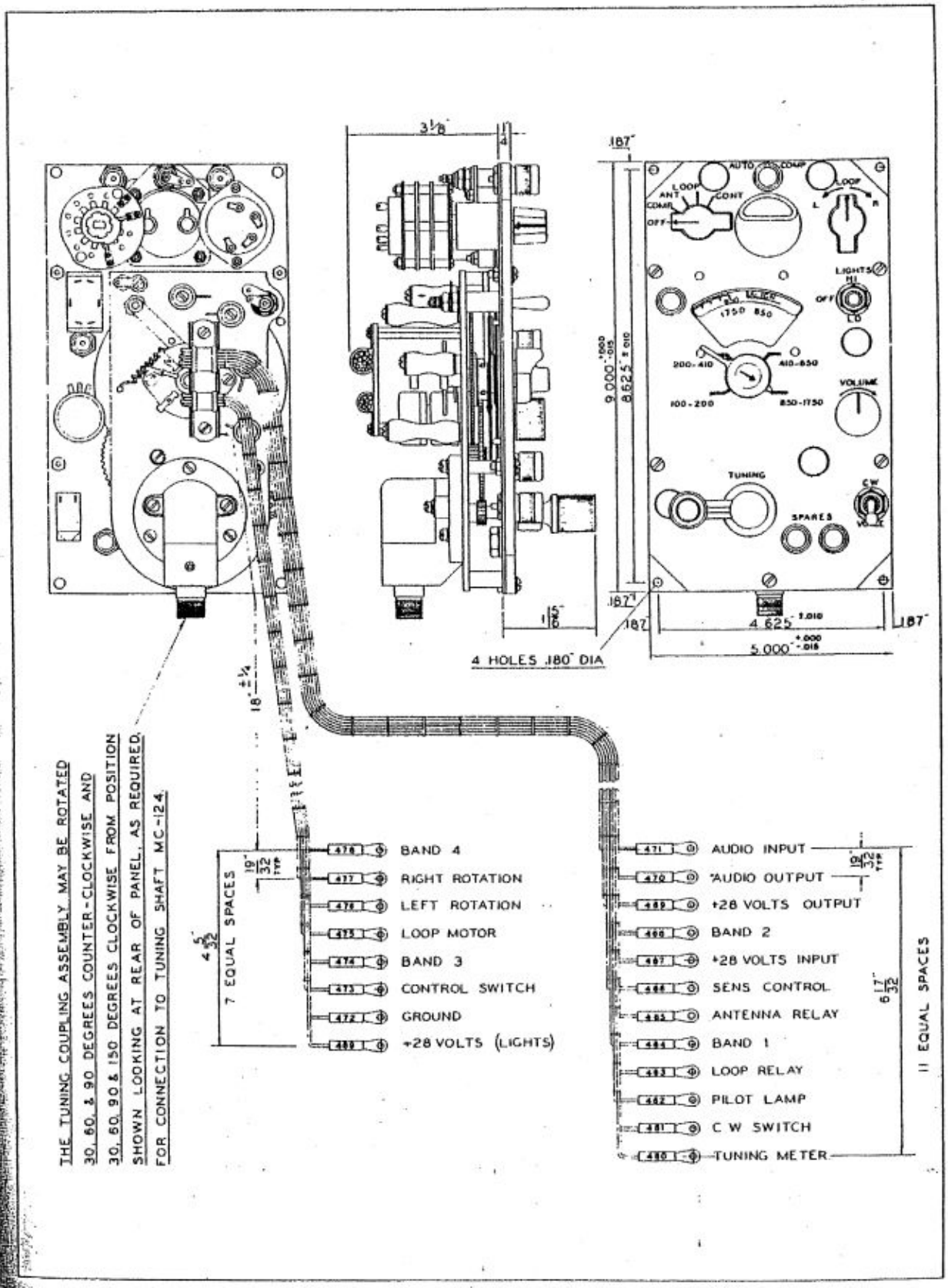

Figure 6-10A. Control Panel C-403A/A, Outline Drawing

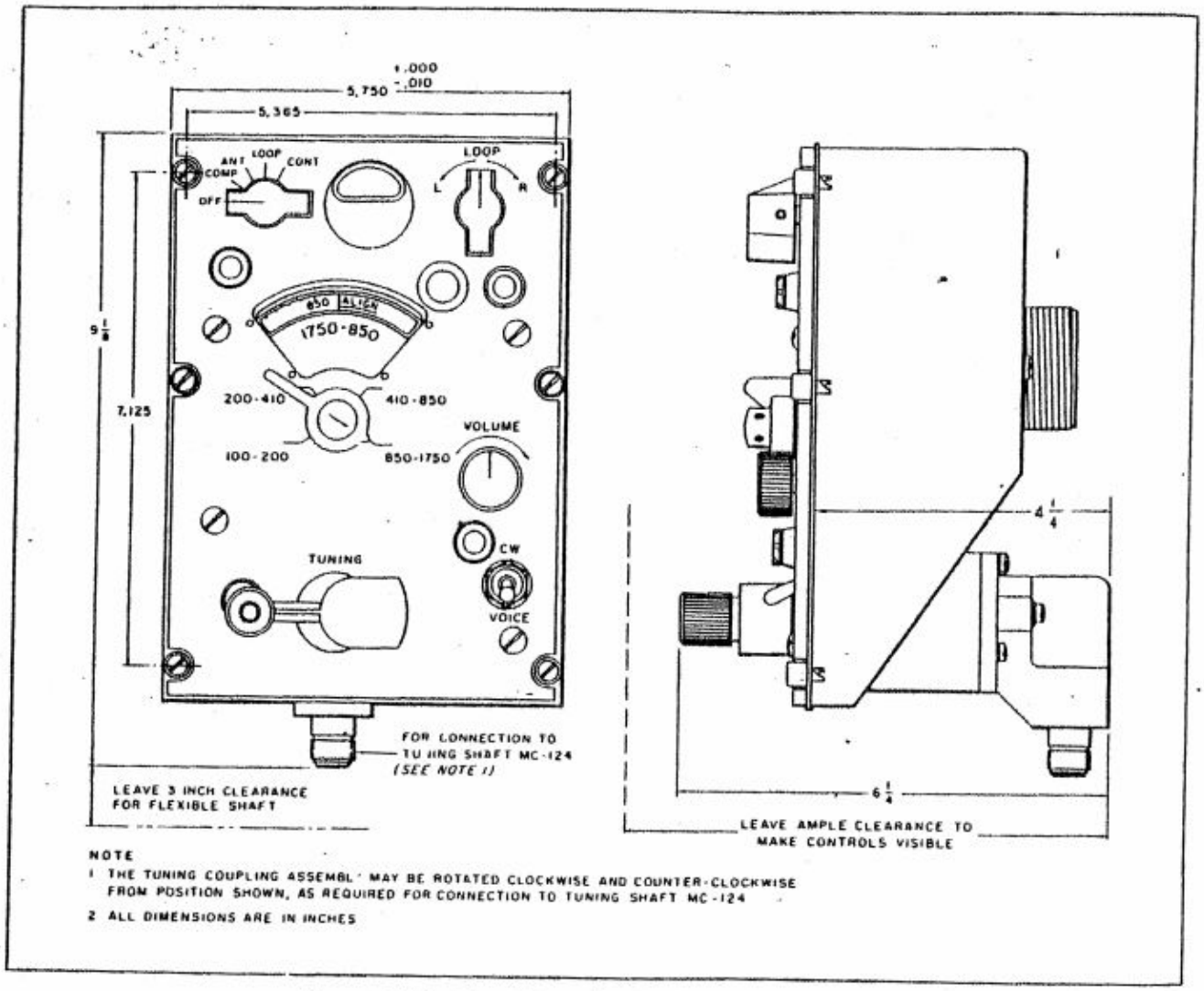

NOTE

1 THE TUNING COUPLING ASSEMBLY MAY BE ROTATED CLOCKWISE AND COUNTER-CLOCKWISE FROM POSITION SHOWN, AS REQUIRED FOR CONNECTION TO TUNING SHAFT MC-124

2 ALL DIMENSIONS ARE IN INCHES

Figure 6-10B. Control Panel C-758/A, Outline Drawing

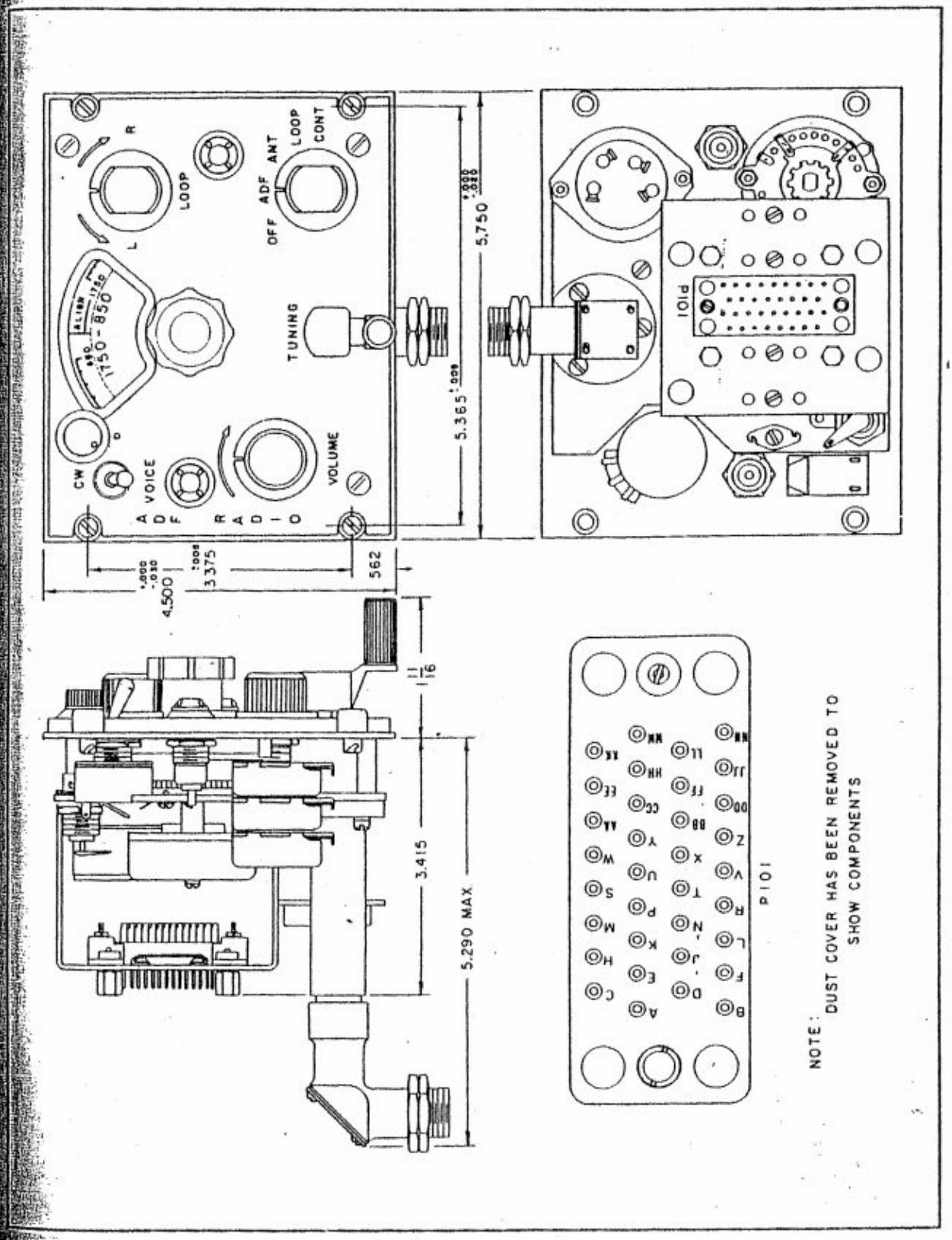

Figure 6-10C. Control Panel C-1514/A, Outline Drawing

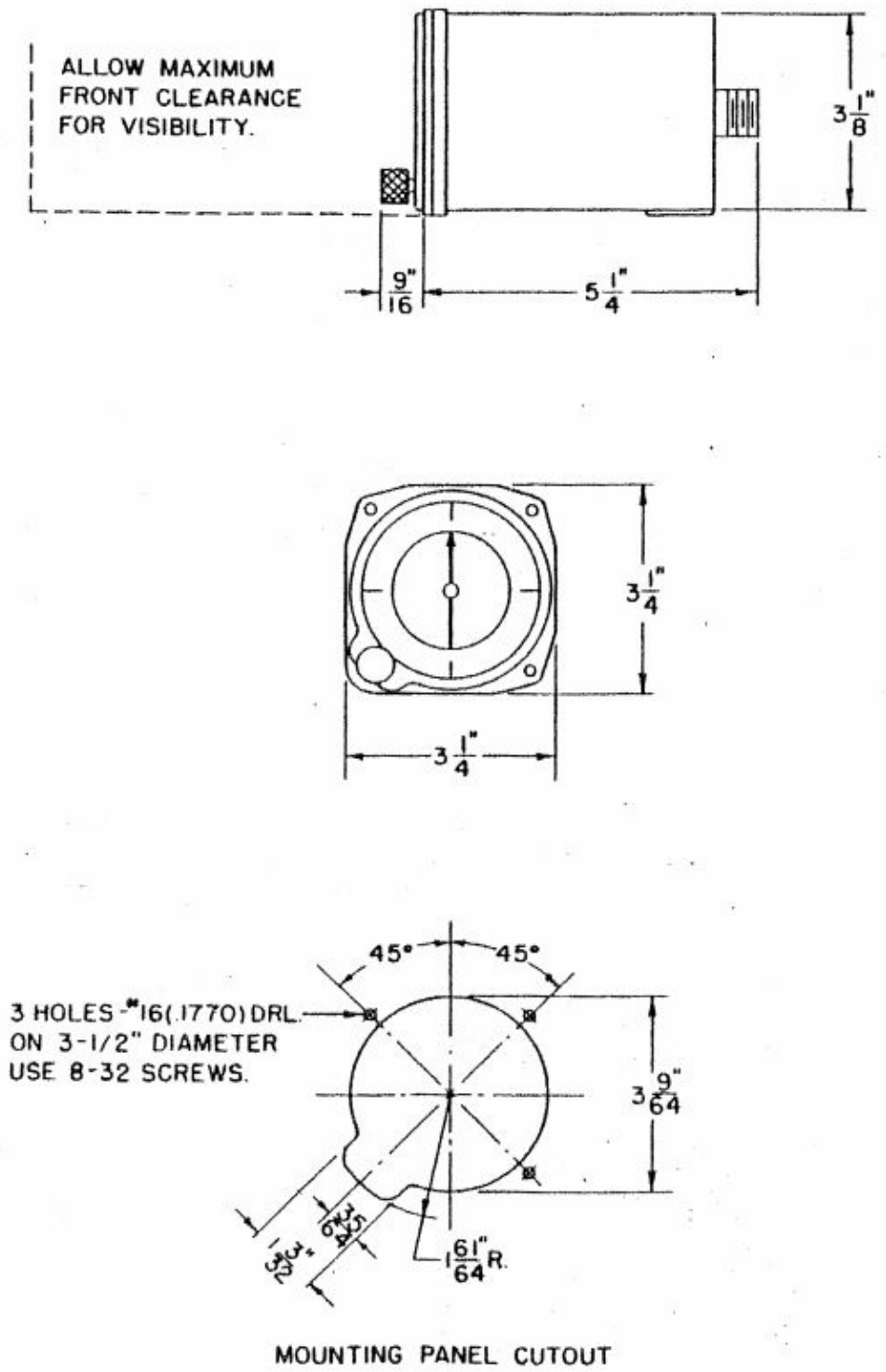

Figure 6-11. Indicator ID-90/ARN-6 (Pilot's), ID-91/ARN-6 (Pilot's Night Fighter), or ID-231/ARN-6, Outline Drawing

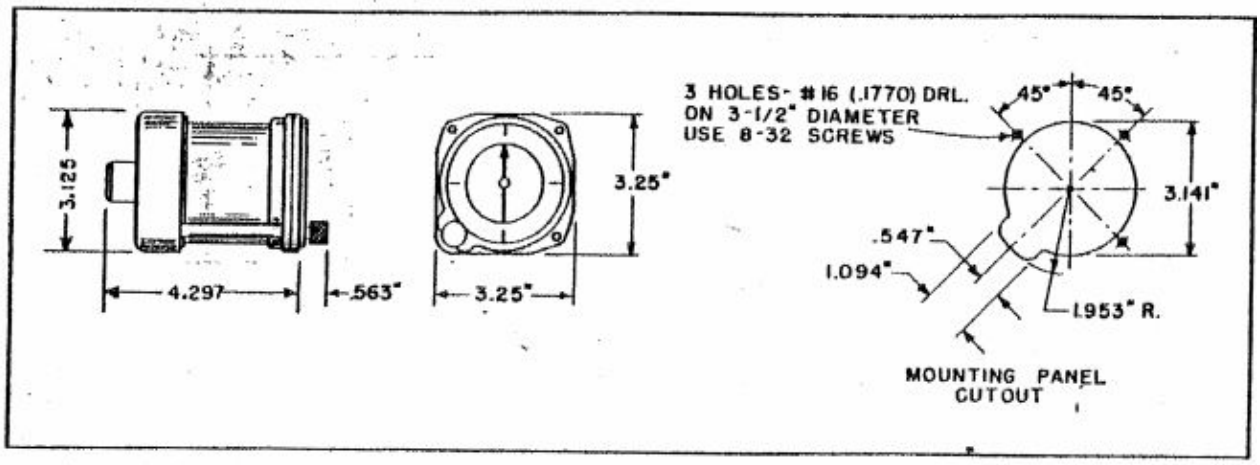

Figure 6-12. Indicator ID-90A/ARN-6 (Pilot's), ID-91A/ARN-6 or ID-91B/ARN-6 (Pilot's Night Fighter), ID-231A/ARN-6, ID-231D/ARN-6, or ID-231E/ARN-6, Outline Drawing

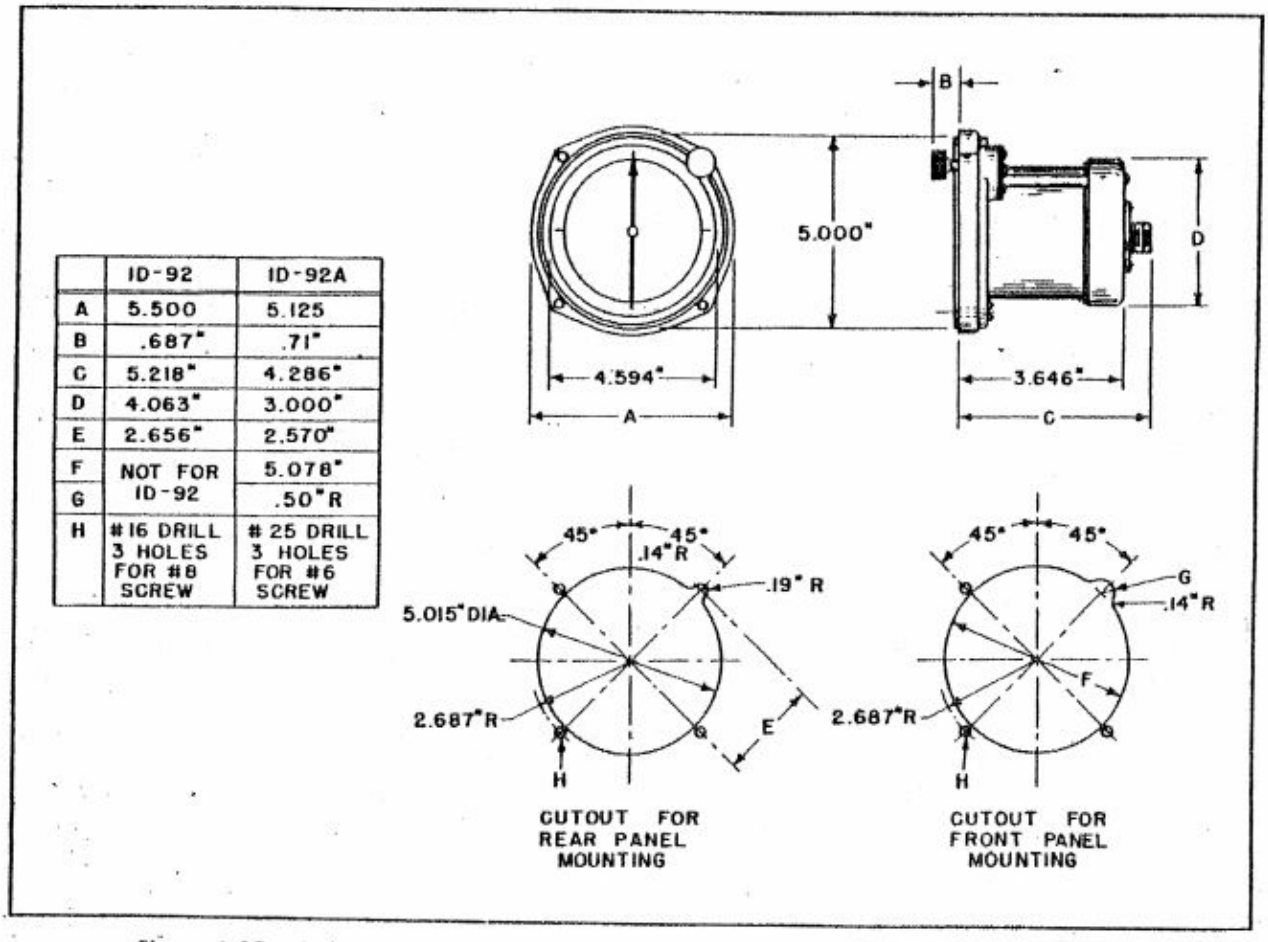

	ID-92	ID-92A
A	5.500	5.125
B	.687"	.71"
C	5.218"	4.286"
D	4.063"	3.000"
E	2.656"	2.570"
F	NOT FOR ID-92	5.078"
G		.50"R
H	#16 DRILL 3 HOLES FOR #8 SCREW	#25 DRILL 3 HOLES FOR #6 SCREW

Figure 6-13. Indicator ID-92/ARN-6 or ID-92A/ARN-6 (Navigator's), Outline Drawing

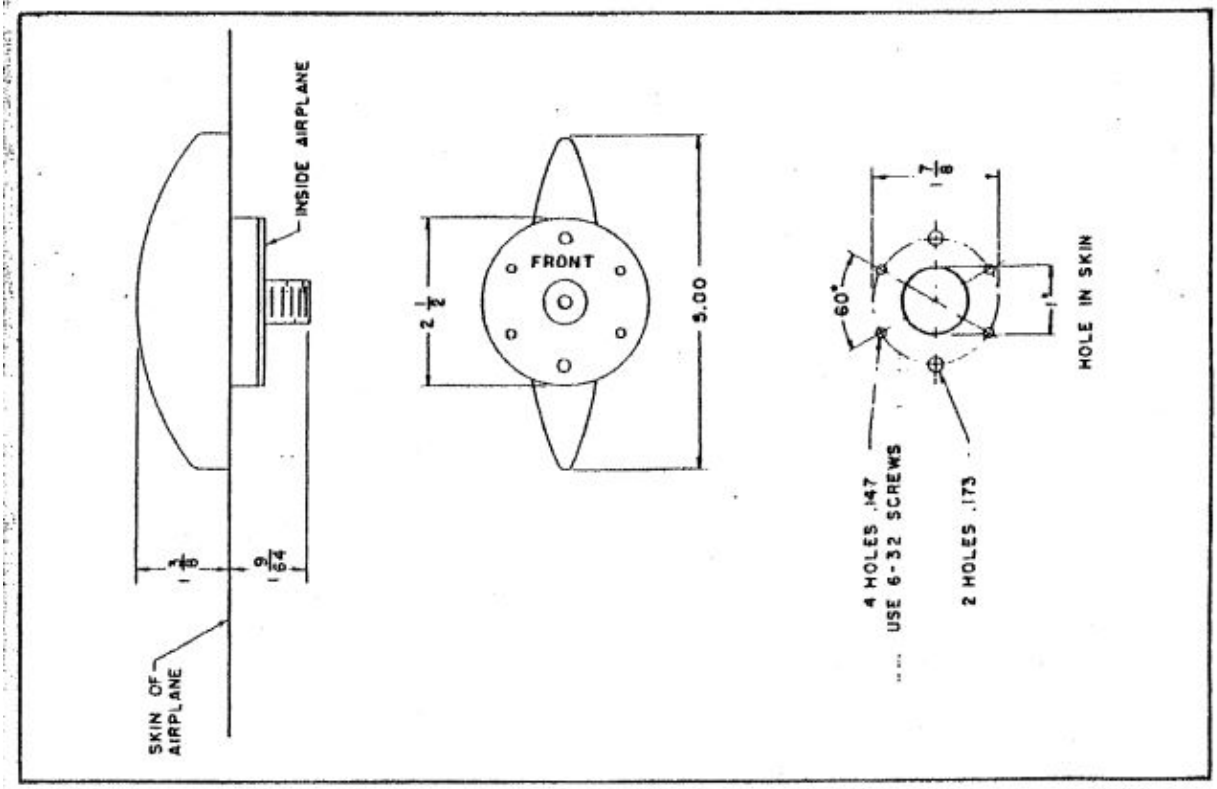

Figure 6-14. Coupling Unit CU-65, ARN-6 (Coupling Antenna to Transmission Line), Outline Drawing

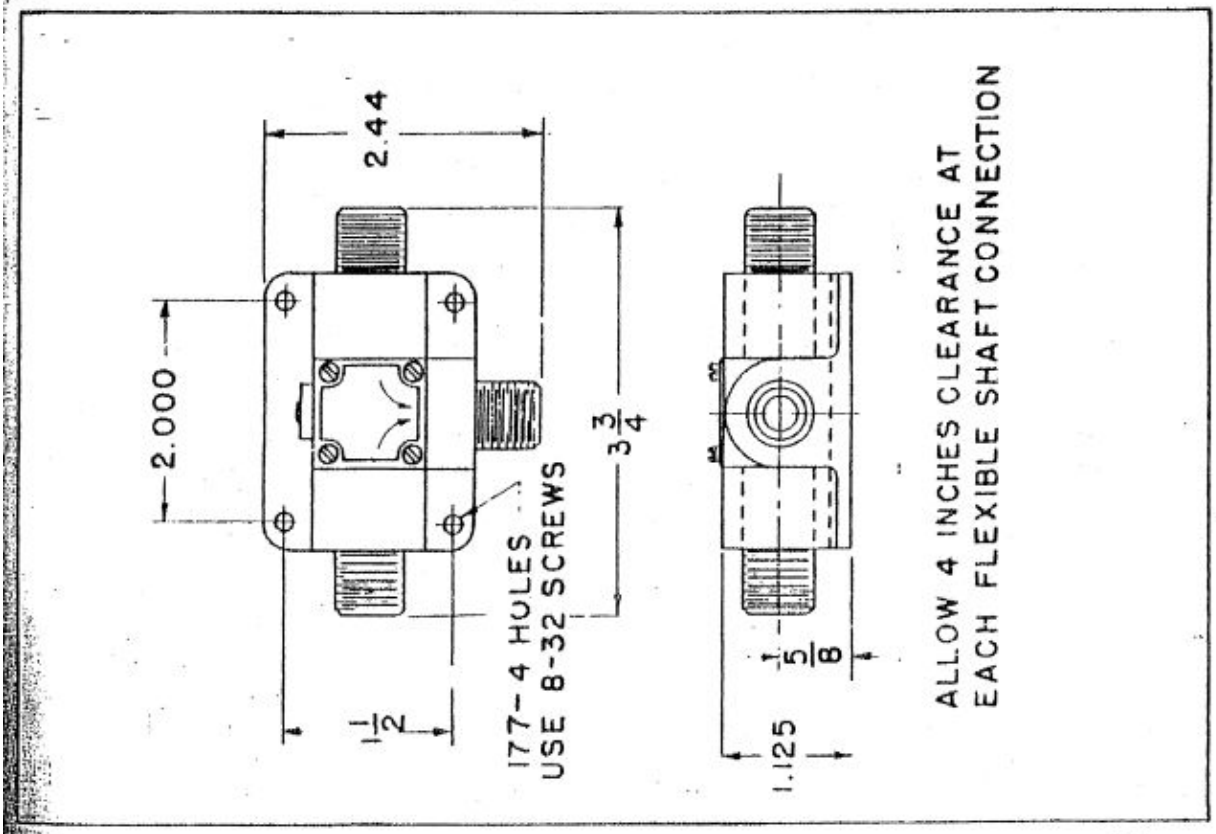

Figure 6-15. Coupling MC-203-A, Outline Drawing

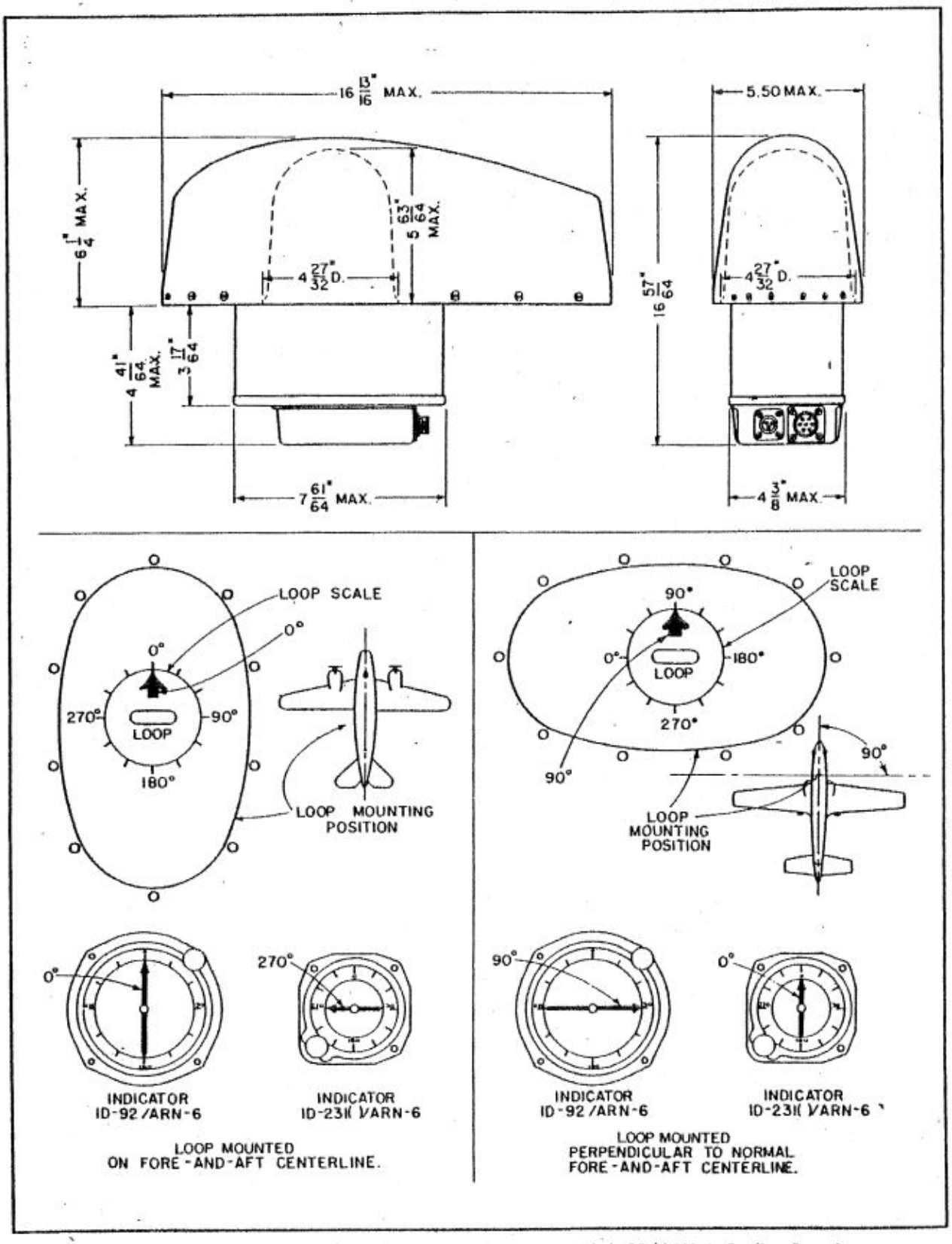

Figure 6-16. Loop AS-313/ARN-6, AS-313A/ARN-6, or AS-313B/ARN-6, Outline Drawing

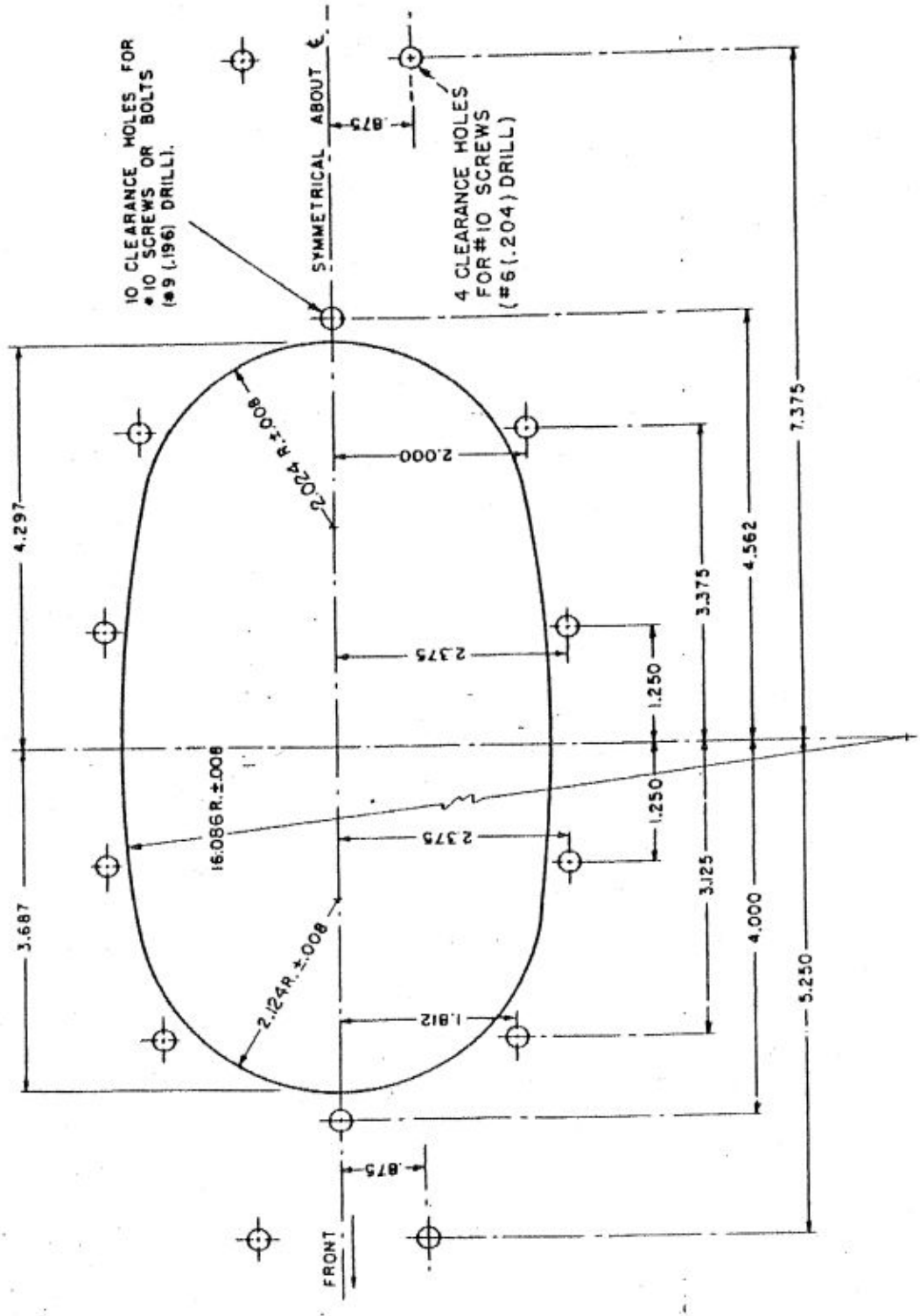

Figure 6-17. Loop AS-313 ARN-6, AS-313A/ARN-6, or AS-313B/ARN-6, Mounting Dimensions

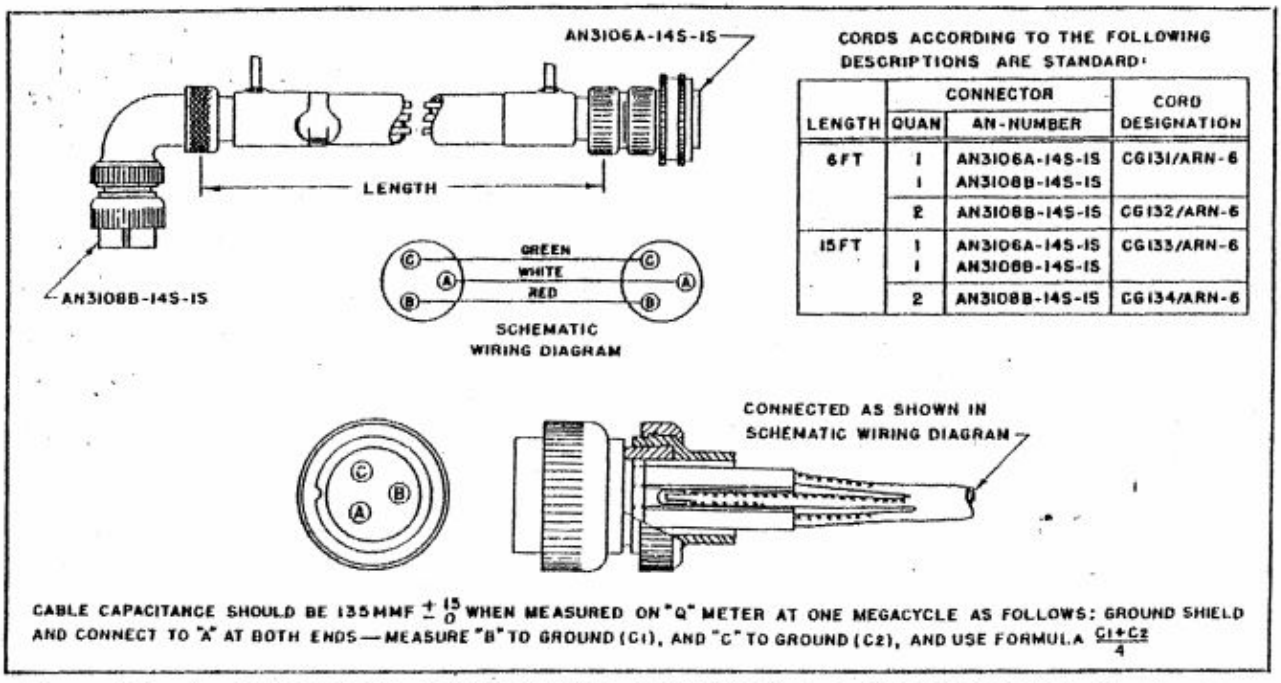

CORDS ACCORDING TO THE FOLLOWING DESCRIPTIONS ARE STANDARD:

LENGTH	CONNECTOR QUAN	CONNECTOR AN-NUMBER	CORD DESIGNATION
6FT	1 1	AN3106A-14S-15 AN3108B-14S-15	CG131/ARN-6
	2	AN3108B-14S-15	CG132/ARN-6
15FT	1 1	AN3106A-14S-15 AN3108B-14S-15	CG133/ARN-6
	2	AN3108B-14S-15	CG134/ARN-6

Figure 6-18. Cord CG-131/ARN-6, CG-132/ARN-6, CG-133/ARN-6, or CG-134/ARN-6, Outline Drawing

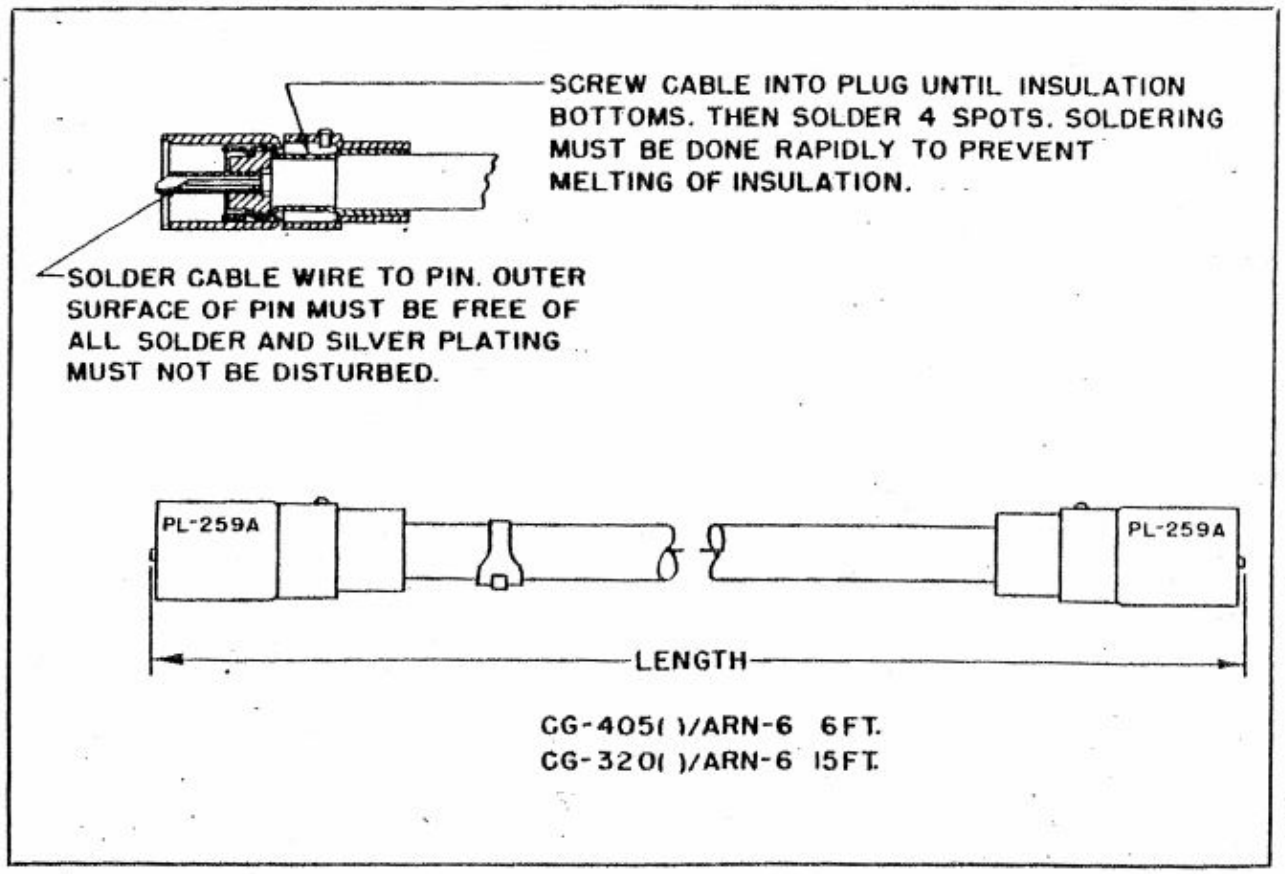

Figure 6-19. Cord CG-320/ARN-6 or CG-405/ARN-6, Outline Drawing

SECTION VII
PARTS CATALOG

1. CONTENT OF TABLE OF REPLACEABLE PARTS.

Listings in the Table of Replaceable Parts do not constitute a complete breakdown of the equipment but consist of all electrical parts and such operative mechanical parts, with the exception of structural and minor parts such as standard bolts, screws, nuts, etc., that are subject to loss or failure. In some instances individual detail parts of a sub-assembly may not be listed as separate items, since replacement of such items is impractical.

2. ARRANGEMENT OF TABLE.

a. The Table of Replaceable Parts is arranged in groups by major assemblies. In each group the major assembly itself appears first in the table, followed by the parts arranged alphabetically and numerically according to the reference number. The group headed "Miscellaneous" contains assemblies and accessories for which no subordinate parts are listed; this group includes indicators, RF transmission lines, loop antenna, and instruction plate. The following summary lists the major assemblies:

b. Resistors R-125, R-150, and R-181 appear in two different groups, as follows:

(1) Radio Compass Units R-101/ARN-6, serial No. 25 or less: R-125, 82,000 ohms; R-150, 12,000 ohms; R-181, 27,000 ohms.

(2) Radio Compass Units R-101/ARN-6, serial No. 26 or over: R-125, 333,000 ohms; R-150, 470,000 ohms; R-181, 82,000 ohms.

Note

Radio Compass Unit R-101A/ARN-6 or R-101B/ARN-6 employs two additional threshold controls (R-1108 and R-1109) and an additional switch section (S-128). Some of the capacitor and resistor values in R-101A/ARN-6 or R-101B/ARN-6 are different from those in R-101/ARN-6 (see Table of Replaceable Parts), and functions of sections of V-110 and V-113 are changed. (See schematic diagrams.) Radio Compass Unit R-101B/ARN-6 further differs from R-101/ARN-6 or R-101A/ARN-6 in the types and values of capacitors in L-101, L-103, L-104, L,105, and L-106. (See schematic diagrams.)

In making replacements, do not mix values from different groups; in case of doubt, check resistor values, as well as radio compass unit serial number. If instructed by proper authority, the earlier group

Summary of Table of Replaceable Parts

Major Assembly		*Ref. No. (Numerical)*	*Sig. C. Stock No.*	*Table Page*
Radio Compass (complete)	AN/ARN-6		2S902-6	
Radio Compass Unit	R-101/ARN-6,	100-199	2C3035-101	132
	R-101A/ARN-6 and	1100-1199	2C3035-101	132
	R-101B/ARN-6	2100-2199		132
Control Box	C-149/ARN-6 and		2C666-149	185
	C-149A/ARN-6	301-399	2C666-149	185
and Mounting	MT-275/ARN-6	401-499	2Z6763-275	191
Mounting	MT-273A/ARN-6,		2Z6763-273	191
	MT-273B/ARN-6,		2Z6763-273	191
	MT-273D/ARN-6 and		2Z6763-273	191
	MT-273E/ARN-6	501-599	2Z6763-273	191
and Mounting	MT-274/ARN-6,		2Z6763-274	191
	MT-274A/ARN-6,		2Z6763-274	191
	MT-274B/ARN-6 and		2Z6763-274	191
	MT-274C/ARN-6	501-599	2Z6763-274	191
Coupling Unit	CU-65/ARN-6 and	601-699	2C472-65	194
	CU-65A/ARN-6	611-699		
			2C472-65	194
Loop	AS-313/ARN-6,			
	AS-313A/ARN-6 and			
	AS-313B/ARN-6	701-799	2A1991-313 (loop, less housing) 2A790-141 (housing)	195
Indicator	ID-90/ARN-6,		2C1565-90	200
	ID-90A/ARN-6		2C1565-90	200
	ID-91/ARN-6,		2C1565-91	200
	ID-91A/ARN-6,		2C1565-91	200
	ID-91B/ARN-6,		2C1565-91	200
	ID-92/ARN-6,		2C1565-92	200
	ID-92A/ARN-6,		2C1565-92	200
	ID-231/ARN-6,		2C1565-231	200
	ID-231A/ARN-6,		2C1565-231	200
	ID-231D/ARN-6 and		2C1565-231	200
	ID-231E/ARN-6	801-899	2C1565-231	200
Instruction Plate				205
RF Transmission Line				205
Control Panel	C-403A/A	101-199	2C667-403A	206
	C-758/A and	101-199	*1600-D130800/0	
	C-1514/A	1-099		

may be replaced by the later, with a consequent improvement in audio quality.

3. EXPLANATION OF SYMBOLS USED.

a. REFERENCE SYMBOLS (COLUMN ONE.)—To identify parts of an equipment referred to in the text, in illustrations, and in the Table of Replaceable Parts, a reference symbol is assigned to each part making up a major assembly of an equipment. Each symbol consists of an alphabetical and a numerical portion, separated by a hyphen. The numerical portion is an indication of the major assembly to which a particular part belongs, as indicated in the "Summary of Table of Replaceable Parts," in paragraph 2. The alphabetical portion indicates the nature of the part, as follows:

A—Structural parts
B—Motors
C—Capacitors
E—Miscellaneous electrical parts, terminal boards, insulators, knobs, lamps, phenolic spacer bushings, etc.
H—Miscellaneous hardware, screws, nuts, washers, collars, springs, metal bushings, etc.
I—Indicators (panel and indicator lights)
J—Electrical connectors, female contact (male contact in Control Panel C-758/A)
K—Relays
L—RF coils and transformers and assemblies thereof; audio reactors and autotransformers
M—Meters
O—Mechanical parts, gears, shafts, cranks, etc.
P—Electrical connectors, male contact
R—Resistors
S—Switches and switch wafers
T—Transformers, IF and AF
V—Electron tubes
X—Sockets for tubes, "plug-in" parts, and lamps
Y—Vibrator inverter and vibrator unit
Z—RF tuned impedance (wave trap)

b. CROSS-HATCH SYMBOL (COLUMN TWO).—The symbol "#" appearing instead of a stock number in column two of the Table of Replaceable Parts, denotes that the part so indicated is not concurrently furnished as a spare or is not replaceable.

4. ABBREVIATIONS.

Abbreviations used in the Table of Replaceable Parts and their meanings are as follows:

ABEC—Annular Bearing Engineer's Committee
AC—alternating current
adj—adjust, adjustable, or adjustment
AF—audio frequency
alum—aluminum
AM—amplitude modulation
ant—antenna
approx—approximate, approximately
aux—auxiliary
AVC—automatic volume control
AWG—American Wire Gauge
bfo—beat-frequency oscillator
brg—bearing (s)
c—center
cad—Cadmium
circum—circumference
c/o—consisting of
coef—coefficient
cont—contact (s)
cps—cycles per second
CRS—cold-rolled-steel
csk—countersunk
CT—center tapped, center tap
c to c—center to center
ctb—counterbore (d)
ctr—center
d—deep, depth
DC—direct current
deg—degree (s)
det—detail (s)
dimen—dimensions
dr—drum (s)
ea—each
elec—electric
FH—fillister head
fil—filament (s)
fl—flange (s)
flex—flexible
FMS—from mounting surface
fp—fungusproof (ed)
freq—frequency (ies)
galv—galvanized
gm—gram (s)
h—height or high
hd—head
hex—hexagon, hexagonal
HF—high-frequency
hp—horsepower
HS—hermetically sealed
hy—henry (s)
ID—inside diameter
IF—intermediate frequency
impr—impregnate (ed) (ion)
incl—includes, included, inclusive, including
ins—insulating, insulated, insulator (s)
int—internal
JAN—Joint Army-Navy
kc—kilocycle
lb—pound (s)
ma—milliampere (s)
max—maximum
mf—microfarad (s)
mh—millihenry (s)
min—minimum
min—minute (s)
mmf—micromicrofarad (s)
mp—moistureproof (ed)
mtg—mounting
mtg/c—mounting center (s)
neg—negative
NF—National Fine (thread)
No.—number (s)

o/a—overall
OD—outside diameter
OH—oval head
osc—oscillator
oz—ounce (s)
PD—pitch diameter
phos—phosphor
pl—plated
p/m—plus or minus
p/o—part of
pos—positive
pri—primary (ies)
rad—radius
RC—rubber-covered
Ref—reference
RF—radio frequency
RH—right hand
RMS—root mean square
RSW—resistant to salt water
secd—secondary (ies)
sect—section (s)
Sig C—Signal Corps
SLF—straight line frequency
spcl—special
spec—specification
SPST—single-pole, single-throw
sq—square
SS—stainless steel
std—standard
Stk—stock
temp—temperature
term—terminal (s)
thd—thread
thk—thick, thickness
tol—tolerance
uh—microhenry (s)
v—volt (s)
vacw—AC working volts
vdcw—DC working volts
vert—vertical
w—watt (s)
w/—with
wd—wide, width
wnd—wound, winding (s)
WW—wire-wound
x—by (as used to express dimensions)
#—number (s)
"—inch (es)
%—per cent
±—plus or minus
°—degree (s)
'—minute (s)
'—feet

5. ORDERING SPARE PARTS.

a. GENERAL.—Each Service using the Table of Replaceable Parts has established certain depots and service groups for the storage and issue of spare parts. The regulations of each Service should be studied to determine the method of requisitioning spare parts and the sources from which they may be obtained. Information in the table pertaining to manufacturers' or contractors' names, types, models, or drawing numbers is not to be interpreted as authorization to field agencies to attempt to purchase identical or comparable spare parts directly from wholesale or retail stores except under emergency conditions as covered by the existing regulations of the Service concerned.

b. USAF PERSONNEL.—The Table of Replaceable parts is for information *only* and is not to be construed as a list of allowances of maintenance parts or components. Organizations using this equipment will consult applicable AF Technical Orders in the 00-30 and 00-30A series. Higher maintenance and supply echelons will consult applicable Technical Orders in the 16-55 series.

c. STOCK NUMBERS. — In the second column ("Army Stock Number, Navy Stock Number, British Ref. Number") of the Table of Replaceable Parts, the "AAF#" is the Air Force Part Number, the Signal Corps Stock Number (for Army) and the "ASO#" is the Aviation Supply Office Stock Number (for Navy).

TABLE OF REPLACEABLE PARTS

MODEL: Radio Compass AN/ARN-6 **MAJOR ASSEMBLY: Radio Compass Unit R-101/ARN-6, R-101A/ARN-6 and R-101B/ARN-6**

Reference Symbol	*Army Stock Number Navy Type Number British Ref. Number*	*Name of Part and Description*	*Function*	*Mfr. and Designation or JAN Type*	*Drawing Or Spec. No.*
Series 101-199 1100-1199	AAF #2C3035-101	RECEIVER, Radio: Army-Navy Radio Compass Unit R-101/ARN-6; AM & CW; for automatic radio compass use, also communication reception; 100 to 1750 kc in 4 bands; input nominal 26.5v DC, 106 watts; principal output controls loop drive motor; mounts in Mounting MT-273( )/ARN-6 or Mounting MT-274( )/ARN-6; approx 11-3/8" lg x 7-5/16" h x 15-1/4" d; 16 tubes; superheterodyne reception; has bfo and tone modulation, internal phasing modulate, gas-discharge tubes for loop drive control, external control box, p/o Radio Compass AN/ARN-6.	Receiver		Fairchild F424-A1
Series 101-199 1100-1199	or AAF #2C3035-101 ASO #R16-R-2193-33	Receiver, Radio: Army-Navy Radio Compass Unit R-101/A ARN-6; AM & CW; for automatic radio compass use, also communication reception 100 to 1750 kc in 4 bands; input nominal 26.5v DC, 106 watts; principal output controls loop drive motor; mounts in Mounting MT-273( )/ARN-6 or MT-274 ( )/ARN-6; approx 11-3/8" lg x 7-5/16" h x 15-1/4" d; 16 tubes; superheterodyne reception; has bfo and tone modulation, internal phasing modulator, gas-discharge tubes for loop drive control, external control box; p/o Radio Compass AN/ARN-6.	Receiver	Bendix Part No. OR200268-1	Bendix Dwg. OR200268-1
Series 101-199 1100-1199 2100-2199		RECEIVER, Radio: Army-Navy Radio Compass Unit R-101B/ARN-6; AM & CW; for automatic radio compass use, also communication reception; 100 to 1750 kc in 4 bands; input nominal 26.5v dc, 106 watts; principal output controls loop drive motor; mounts in Mounting MT-273( )/ARN-6 or MT-274 ( )/ARN-6; approx 11-3/8" lg x 7-5/16" h x 15-1/4" d; 16 tubes; superheterodyne reception; has bfo and tone modulation, internal phasing modulator, gas-discharge tubes for loop drive control, external control box; p/o Radio Compass AN/ARN-6.	Receiver	Bendix Part No. OR200268-4	Bendix OR200268-4
A-101		COVER: electrical shielding; brass, hot tin dipped; rectangular, with one corner cut off at 45 degrees; 1-21/32" lg x 1-15/32" wd x 1/32" thk; two mtg holes #26 dr, spaced 1-1/2" approx on diagonal.	To complete shielding of X-117 Used with R-101/ARN-6, R-101A/ARN-6 and R-101B/ARN-6	Bendix Part No. C228016	Fairchild B-424-930 and Bendix Dwg. C228016
B-101	AAF #3H3100A02-16 ASO #R17-M-3459-130	MOTOR, DC: split-field reversible series; rating not specified—less than 1/50 hp; closed frame; 2.141" lg x 1.794" wd x 1.468" h overall shaft has attached gear 0.312" pitch diam, 15 teeth, 48 pitch 7/16" overall lg 7/32" tooth face; 26.5v DC, 12.5 watts; 3200 rpm; mtg by screws; end of frame tapped 4 holes #6-32 on 1-3/7" circle at 45 degrees point; tropicalized.	Band-switch drive Used with R-101/ARN-6, R-101A/ARN-6 and R-101B/ARN-6	Bendix Part No. L221028-1	Fairchild B424-AA16 and Bendix Dwg. L221028-1
C-101	AAF #3DA10-405 ASO #R16-C-11697-490	CAPACITOR, fixed: paper dielectric; equal to JAN-CN22E103K except has 3-dot color code; 10,000 mmf ± 10%; 300 vdcw; molded yellow mica filled phenolic case; case not over 57/64" lg x 13/16" wd x 19/64" thk; 2 axial wire leads.	RF bypass, L-101 Used with R-101/ARN-6, R-101A/ARN-6 and R101B/ARN-6	Micamold #339; YL110	Fairchild B424-763, Bendix C220082-4 and Magnavox 257817-4

C-102	AAF #3D9018-11	CAPACITOR, Fixed: paper dielectric; 18 mmf ±1 mmf; 300 vdcw; 51/64" x 15/32" x 7/32"; molded phenolic; 2 axial wire leads.	Part of secondary tuning, L-109. Used with R-101/ARN-6	Micamold Type PO 18 ±5%D	Fairchild B424-621
	or AAF #3D9018-13 ASO #R16-C-7865-22-500	CAPACITOR, Fixed: ceramic; 18 mmf ±5%; 500 vdcw.	Part of secondary tuning, L-109. Used with R-101A/ARN-6	JAN type CC26CJ180J	JAN-C-20
	or	CAPACITOR, Fixed: ceramic; 390 mmf ±2%; 500 vdcw.	Part of secondary tuning, L-109. Used with R-101B/ARN-6	JAN type CC26RH390G	Magnavox 250088-129
C-103	AAF #3D9030V-6 ASO #R16-C-7852-505	CAPACITOR, Variable: ceramic; rotary type, single sect; 4 to 30 mmf; 500 vdcw; negative temp coef 500 mmf/mf/°C; 27/32" lg x 21/32" wd x 3/8" h; solder lug term; two 0.120" diam mtg holes in base, on 7/16" mtg/c; screwdriver slot adjustment; ceramic base.	Trimmer, secondary L-109. Used with R-101/ARN-6 and R-101A/ARN-6	Erie Type N500TS2A	Fairchild C-424-8 and Bendix Dwg. C219043-1
	or	CAPACITOR, Variable: air dielectric plate meshing type, one section; 3.3 mmf to 23.3 mmf; 7/8" lg x 5/8" wd x 3/4" h excluding shaft; shaft 1/2" lg x 0.188" diam; 10 plates, 0.02" thk; 180 degrees clockwise rotation; ceramic insulation; lug terminals; shaft mtg.	Trimmer, secondary L-109. Used with R-101B/ARN-6	Johnson type 160-127-9	Bendix C219535-6 and Magnavox C267819
C-104	AAF #3D9030V-6 ASO #R16-C-7852-505	CAPACITOR, Variable: ceramic; 4 to 30 mmf. Same as C-103.	Trimmer, secondary L-110. Used with R-101/ARN-6 and R-101A/ARN-6		
	or	CAPACITOR, Variable: air dielectric; 3.3 mmf to 23.3 mmf. Same as C-103.	Trimmer, secondary L-110. Used with R-101B/ARN-6		
C-105	AAF #3D9082-12	CAPACITOR, Fixed: mica dielectric; 12 mmf ±1 mmf; 300 vdcw; 51/64" x 15/32" x 7/32"; molded phenolic; 2 axial wire leads	Part of secondary tuning L-110 and L-111. Used with R-101/ARN-6	Micamold Type PO 12 ±5%D	Fairchild B424-622
	or AAF #3D9012/50 ASO #R16-C-7863-50-500	CAPACITOR, Fixed: ceramic, 12 mmf ±5%; 500 vdcw.	Part of secondary tuning L-110 and L-111. Used with R-101A/ARN-6	JAN type CC21CJ120J	JAN-C-20
C-106	AAF #2D9030V-6 ASO #R16-C-7852-505	CAPACITOR, Variable: ceramic, 4 to 30 mmf. Same as C-103.	Trimmer, secondary L-111. Used with R-101/ARN-6 and R-101A/ARN-6		
	or	CAPACITOR, Variable: air dielectric; 3.3 to 23.3 mmf; Same as C-103.	Trimmer, secondary L-111. Used with R-101B/ARN-6		
C-107	AAF #3D9030V-6 ASO #R16-C-7852-505	CAPACITOR, Variable: ceramic; 4 to 30 mmf. Same as C-103.	Trimmer, secondary L-112. Used with R-101/ARN-6 and R-101A/ARN-6		
	or				

TABLE OF REPLACEABLE PARTS (Continued)

MODEL: Radio Compass AN/ARN-6 **MAJOR ASSEMBLY: Radio Compass Unit R-101/ARN-6, R-101A/ARN-6 and R-101B/ARN-6**

Reference Symbol	*Army Stock Number Navy Type Number British Ref. Number*	*Name of Part and Description*	*Function*	*Mfr. and Designation or JAN Type*	*Drawing Or Spec. No.*
		CAPACITOR, Variable: air dielectric; 3.3 to 23.3 mmf; Same as C-103.	Trimmer, secondary L-112. Used with R-101B/ARN-6		
C-108	AAF #3D9024-23	CAPACITOR, Fixed: ceramic; 24 mmf ±2%; 500 vdcw.	Temp compensation, all secondaries of L-101. Used with R-101/ARN-6	JAN CC21UK240G	JAN-C-20
	or	CAPACITOR, Fixed: ceramic; 24 mmf ±5%; 500 vdcw.	Temp compensation, all secondaries of L-101. Used with R-101A/ARN6	JAN type CC21TH240J	JAN-C-20
	or	CAPACITOR, Fixed: ceramic; 24 mmf ±5%; 500 vdcw.	Temp compensation secondaries of L-101. Used with R-101B/ARN-6	JAN type CC21SH240J	Magnavox 250088-116
C-109	AAF #3DA10-405 ASO #R16-C -11697-490	CAPACITOR, Fixed: mica dielectric 12 mmf ±1 mmf. Same as C-101.	Part of secondary tuning L-101 all bands. Used with R-101/ARN-6		
	or AAF #3D9012-50 ASO #R16-C -7863-50-500	CAPACITOR, Fixed: ceramic; 12 mmf ±5%. Same as C-105.	Part of secondary tuning L-101 all bands. Used with R-101A/ARN-6		
C-110	AAF #3D9150-52	CAPACITOR, Fixed: mica dielectric; 150 mmf ±2%; 500 vdcw; temp coef letter E; case size 20 per JAN-C-5, 51/64" x 15/32" x 7/32" max; 2 axial wire leads.	Compensation for sense antenna, loop operation. Used with R-101/ARN-6	Micamold PO 150 ±2%E	Fairchild F26-CM20E 151G
	or AAF #3K2015133 ASO #R16-C -9954-6-100	CAPACITOR, Fixed: mica; 150 mmf ±2%; 500 vdcw.	Compensation for sense antenna, loop operation. Used with R-101A/ARN-6	JAN type CM20C151G	JAN-C-5
C-111	AAF #3D9402V-6 ASO #R16-C -11947-100	CAPACITOR, Variable: air dielectric plate meshing type, five sections; 12.5 to 402 mmf per section; modified SLF characteristic; 750v RMS; 9-5/16" lg x 3-3/16" wd x 1-27/32" h excluding flex shaft coupling; flex shaft coupling 5/8" −27 thd x 19/32" lg; flex shaft gear reduction adjustment; 21 polished aluminum plates per section, .02" thk; 180 degree clockwise rotation; ceramic insulation; lug terminals, two mtg holes for #8-32 screws on front plate, on 2-1/2" mtg/c.	Main gang tuning capacitor. Section A Loop tuning B Ant. tuning C 1st RF tuning D 2nd RF tuning E Osc tuning Used with R-101/ARN-6, R-101A/ARN-6 and R-101B/ARN-6	Radio Condenser Co. CN817094	Fairchild E424-AB1, Bendix N219042 and Magnavox 267801-1

C-112	AAF#3DA300-18 ASO#R16-C-11339-18	CAPACITOR, Fixed: paper dielectric; six sections; 300,000 mmf +25% −10% per section; 400 vdcw, hermetically sealed metal can; 1-3/8" lg x 1-3/8" wd x 3-7/8" h, mineral oil impregnation and partially filled 6 solder lug terminals; all sections have common ground to can; 4 mtg holes for #6-32 screw, 1" mtg/c.	Section A Cathode bypass V-101 B Screen bypass V-101 C Plate supply filter V-101 D Cathode bypass V-102 E bypass, R-108 (grid circuit, V-102B) F Screen bypass V-103 Used with R-101/ARN-6, R-101A/ARN-6 and R-101B/ARN-6	Micamold Special Electrical Utilities	Fairchild D424-585, Bendix L220081 and Magnavox 257812-1
C-113	AAF#3K2075033 ASO#R16-C -9882-70-10	CAPACITOR, Fixed: mica; 75 mmf ±2%; 500 vdcw.	Resonator, phasing unit L-102. Used with R-101/ARN-6, R-101A/ARN-6 and R-101B/ARN-6	JAN CM20C750G	JAN-C-5 Magnavox 257827-2022
C-114	AAF#3K2020022 ASO#R16-C -9813-14-5	CAPACITOR, Fixed: mica; 20 mmf ±5%; 500 vdcw.	Resonator, phasing unit L-102. Used with R-101/ARN-6, R-101A/ARN-6 and R-101B/ARN-6	JAN CM20B200K	JAN-C-5 Magnavox 257827-1106
C-115	AAF#3K2024122 ASO#R16-C -9973-4-100	CAPACITOR, Fixed: mica; 240 mmf ±5%; 500 vdcw.	Grid coupling L-102 to V-102B. Used with R-101/ARN-6, R-101A/ARN-6 and R-101B/ARN-6	JAN type CM20B241J	JAN-C-5 Magnavox 257827-1135
C-116	AAF#3K2024122 ASO#R16-C -9973-4-100	CAPACITOR, Fixed: mica; 240 mmf ±5%; 500 vdcw. Same as C-115.	Grid coupling L-102 to V-102A. Used with R-101A/ARN-6 and R-101B/ARN-6		
C-117	AAF#3DA250-439 ASO#R16-C -11338-17-20	CAPACITOR, Fixed: paper dielectric, wax impreg; 250,000 mmf ±20%; 120 vdcw; molded yellow mica-filled phenolic case; case is 1-15/32" lg x 49/64" wd x 13/32" thk; 2 axial wire leads.	100-cycle input to V-102A. Used with R-101/ARN-6, R-101A/ARN-6 and R-101B/ARN-6	Micamold 345-20	Fairchild B424-512, Bendix C220082-11 and Magnavox 257817-11
C-118	AAF#3DA250-439 ASO#R16-C -11338-17-20	CAPACITOR, Fixed: paper dielectric; 250,000 mmf. Same as C-117.	100-cycle input to V-102B. Used with R-101/ARN-6, R-101A/ARN-6 and R-101B/ARN-6		
C-119	AAF#3DA10-364	CAPACITOR, Fixed: paper dielectric; 10,000 mmf. Same as C-101.	RF bypass, 100-cycle supply to V-102A. Used with R-101/ARN-6	JAN type CM35B103J	Magnavox 257830-1178
	or AAF#3K3510322 ASO#R16-C -10492-51	CAPACITOR, Fixed: paper dielectric; 10,000 mmf ±5%; 500 vdcw.	RF bypass 100-cycle supply to V-102A. Used with R-101A/ARN-6 and R-101B/ARN-6		

TABLE OF REPLACEABLE PARTS (Continued)

MODEL: Radio Compass AN/ARN-6 **MAJOR ASSEMBLY: Radio Compass Unit R-101/ARN-6, R-101A/ARN-6 and R-101B/ARN-6**

Reference Symbol	*Army Stock Number Navy Type Number British Ref. Number*	*Name of Part and Description*	*Function*	*Mfr. and Designation or JAN Type*	*Drawing Or Spec. No.*
C-120	AAF #3DA10-364	CAPACITOR, Fixed: paper dielectric; 10,000 mmf. Same as C-101.	RF bypass, 100-cycle supply to V-102B. Used with R-101/ARN-6		
	or				
	AAF #3K3510322 ASO #R16-C-10492-51	CAPACITOR, Fixed: mica; 10,000 mmf ±5%; 500 vdcw. Same as C-119.	RF bypass, 100-cycle supply to V-102B. Used with R-101A/ARN-6 and R-101B/ARN-6		
C-121	AAF #3D9038-1 ASO #R16-C -9842-82-200	CAPACITOR, Fixed: silver mica; 38 mmf ±5%; 500 vdcw; size 20 case is 11/16" lg x 7/16" wd x 3/16" thk; 2 axial wire leads.	Resonator for Z-101. Used with R-101/ARN-6, R-101A/ARN-6 and R-101B/ARN-6	Micamold type PO 38 ±5%; D Electromotive 603M	Fairchild B424-626, Bendix C220076-5 and Magnavox 257818-1
C-122	AAF #3DKA2-110	CAPACITOR, Fixed: mica dielectric 2000 mmf ±10%; 500 vdcw; temp coef letter C; case size 30 per JAN-C-5, 53/64" x 53/64" x 9/32" max; 2 axial wire leads. (Identical with JAN-CM30C202J, except increased capacity tolerance.)	Sense antenna series. Used with R-101/ARN-6	Aerovox #1464S	Fairchild F26-CM30C 202K
	or				
	AAF #3K3020222 ASO #R16-C-10240-71	CAPACITOR, Fixed: mica; 2,000 mmf ±5%; 500 vdcw.	Sense antenna series. Used with R-101A/ARN-6 and R-101B/ARN-6	JAN type CM30B202J	JAN-C-5 Magnavox 257829-1159
C-123	AAF #3D9030V-6 ASO #R16-C-7852-505	CAPACITOR, Variable: ceramic; 4 to 30 mmf. Same as C-103.	Trimmer, secondary L-119. R-101/ARN-6 and R-101A/ARN-6		
	or				
		CAPACITOR, Variable: air dielectric; 3.3 to 23.3 mmf. Same as C-103.	Trimmer, secondary L-119. Used with R-101B/ARN-6		
C-124		(Reference number not assigned)			
C-125	AAF #3D9030V-6 ASO #R16-C-7852-505	CAPACITOR, Variable: ceramic; 4 to 30 mmf. Same as C-103.	Trimmer, secondary L-118. Used with R-101/ARN-6 and R-101A/ARN-6		
	or				
		CAPACITOR, Variable: air dielectric; 3.3 to 23.3 mmf. Same as C-103.	Trimmer, secondary L-118. Used with R-101B/ARN-6		
C-126	AAF #3D9030V-6 ASO #R16-C-7852-505	CAPACITOR, Variable: ceramic; 4 to 30 mmf. Same as C-103.	Trimmer, secondary L-117. Used with R-101/ARN-6 and R-101A/ARN-6		
	or				

		CAPACITOR, Variable: air dielectric; 3.3 to 23.3 mmf. Same as C-103.	Trimmer, secondary L-117. Used with R-101B/ARN-6		
C-127	AAF #3D9010-3	CAPACITOR, Fixed: mica dielectric; 10 mmf ±1 mmf; 300 vdcw; temp coef letter D; size 20 case is 51/64" lg x 15/32" wd x 7/32" thk; 2 axial wire leads.	Coupling into V-113A. Used with R-101/ARN-6	Aerovox #1469	Fairchild B424-627
	or AAF #3D9010-92 ASO #R16-C-7862-2	CAPACITOR, Fixed: ceramic; 10 mmf ±1%; 500 vdcw.	Coupling into V-113A. Used with R-101A/ARN-6 and R-101B/ARN-6	JAN type CC21CJ100F	JAN-C-20 Magnavox 250088-72
C-128	AAF #3DA250-439 ASO #R16-C -11338-17-20	CAPACITOR, Fixed: paper dielectric; 250,000 mmf; same as C-117.	Bypass, V-102 plate supply. Used with R-101/ARN-6, R-101A/ARN-6 and R-101B/ARN-6		
C-129	AAF #3DA100-908 ASO #R16-C-11299-26	CAPACITOR, Fixed: paper; 100,000 mmf ±10% 300 vdcw; 1-15/32" lg x 49/64" wd x 13/32" h; axial wire leads.	AVC filter for V-103, and RF ground for secondaries of L-103. Used with R-101/ARN-6, R-101A/ARN-6 and R-101B/ARN-6	Micamold 345YL122	Bendix Dwg. C220082-7, Fairchild B424-766 and Magnavox 257817-7
C-130	AAF #3D9030V-6 ASO #R16-C-7852-505	CAPACITOR, Variable: ceramic; 4 to 30 mmf. Same as C-103.	Trimmer, secondary L-116. Used with R-101/ARN-6 and R-101A/ARN-6		
	or	CAPACITOR, Variable: air dielectric; 3.3 mmf to 23.3 mmf. Same as C-103.	Trimmer, secondary L-116. Used with R-101B/ARN-6		
C-131	AAF #3DA10-405 ASO #R16-C -11697-490	CAPACITOR, Fixed: paper dielectric; 10,000 mmf. Same as C-101.	Loop feedback network. Used with R-101/ARN-6, R-101A/ARN-6 and R-101B/ARN-6	Micamold 339YL110	Bendix C220082-4, Fairchild B424-763 and Magnavox 257817-4
C-132	AAF #3D9015-5	CAPACITOR, Fixed: mica dielectric; 15 mmf ±1 mmf; 300 vdcw; temp coef letter D; size 20 case is 51/64" lg x 15/32" wd x 7/32" thk; 2 axial wire leads.	RF bridge, L-116. Used with R-101/ARN-6	Micamold Type PO CM20D150J	Fairchild B424-629
	or AAF #5D9015-61 ASO #R16-C-7864-115	CAPACITOR, Fixed: ceramic; 15 mmf ±5%; 500 vdcw.	RF bridge, L-116. Used with R-101A/ARN-6 and R-101B/ARN-6	JAN type CC21HJ150J	JAN-C-20 Magnavox 250088-74
C-133	AAF #3D9024-23	CAPACITOR, Fixed: ceramic; 24 mmf. Same as C-108.	Temp. compensation, all secondaries of L-103. Used with R-101/ARN-6		
	or				

TABLE OF REPLACEABLE PARTS (Continued)

MODEL: Radio Compass AN/ARN-6 **MAJOR ASSEMBLY: Radio Compass Unit R-101/ARN-6, R-101A/ARN-6 and R-101B/ARN-6**

Reference Symbol	*Army Stock Number Navy Type Number British Ref. Number*	*Name of Part and Description*	*Function*	*Mfr. and Designation or JAN Type*	*Drawing Or Spec. No.*
		CAPACITOR, Fixed: ceramic; 24 mmf ±5%; neg temp coef; 500 vdcw.	Temp. compensation, all secondaries of L-103. Used with R-101A/ARN-6	JAN type CC21TH240J	JAN-C-20
	or	CAPACITOR, Fixed: ceramic; 24 mmf ±5%; 500 vdcw.	Temp. compensation, all secondaries of L-103. Used with R-101B/ARN-6	JAN type CC21TH240J	Magnavox 250088-110
C-134	AAF #3D9012-12	CAPACITOR, Fixed: mica dielectric; 12 mmf ±1 mmf. Same as C-105.	Part of secondary tuning L-103, all bands. Used with R-101/ARN-6		
	or AAF #3D9012-50 ASO #R16-C -7863-50-500	CAPACITOR, Fixed: ceramic; 12 mmf ±5%; 500 vdcw. Same as C-105.	Part of secondary tuning L-103, all bands. Used with R-101A/ARN-6 and R-101B/ARN-6	JAN type CC21CJ120J	JAN-C-20
C-135	AAF #3DA300-18 ASO #R16-C-11339-18	CAPACITOR, Fixed: paper dielectric; six sections; 300,000 mmf per section. Same as C-112.	Section A Cathode bypass V-103 B Cathode bypass V-104 C Screen bypass V-104 D Cathode bypass V-106 E Cathode bypass V-107 F Noise filter B-101 Used with R-101/ARN-6, R-101A/ARN-6 and R-101B/ARN-6		
C-136	AAF #3DK9150-25 ASO #R16-C-9951-500	CAPACITOR, Fixed: mica dielectric 150 mmf ±20%; 300 vdcw; temp coef letter A; case 1/2" lg x 9/32" wd x 3/16" thk; case of molded phenolic; 2 axial wire leads.	Stage gain compensating L-104. Used with R-101/ARN-6, R-101A/ARN-6 and R-101B/ARN-6,	Micamold Type Q	Fairchild B424-640, Bendix A113365-151 and Magnavox 257814-1
C-137	AAF #3D9200-89	CAPACITOR, Fixed: mica dielectric 200 mmf ±2%; 500 vdcw; temp coef letter E; case size 20 per JAN-C-5, 51/64" x 15/32" x 7/32" max; 2 axial wire leads.	Part of primary tuning, L-120. Used with R-101/ARN-6	Micamold PO 200 ±2%E	Sig. C dwg. RL-D-6141
	or AAF #3K2020143 ASO #R16-C-9966-91	CAPACITOR, Fixed: mica; 200 mmf ±2%; 500 vdcw.	Part of primary tuning L-120. Used with R-101A/ARN-6 and R-101B/ARN-6	JAN type CM20D201G	JAN-C-5 Magnavox 257827-3033

C-138	AAF #3D9018-11	CAPACITOR, Fixed: mica dielectric; 18 mmf ±1 mmf. Same as C-102.	Part of primary tuning L-120, L-121, L-122. Used with R-101/ARN-6		
	or AAF #3D9018-13 ASO #R16-C -7865-22-500	CAPACITOR, Fixed: ceramic; 18 mmf ±5%. Same as C-102.	Part of primary tuning L-120, L-121, L-122. Used with R-101A/ARN-6 and R-101B/ARN-6		
C-139	AAF #3K2075032 ASO #R16-C-9883-100	CAPACITOR, Fixed: silver mica; 75 mmf ±5%; 500 vdcw; 2 axial wire leads.	Part of primary tuning L-120, L-122. Used with R-101/ARN-6, R-101A/ARN-6 and R-101B/ARN-6	JAN type CM20D750J	JAN-C-5 Magnavox 257827-1122
C-140	AAF #3DA10-405 ASO #R16-C -11697-490	CAPACITOR, Fixed: paper dielectric; 10,000 mmf. Same as C-101.	Loop feedback. Used with R-101/ARN-6, R-101A/ARN-6 and R-101B/ARN-6		
C-141	AAF #3D9002-38 ASO #R16-C-7778-85	CAPACITOR, Fixed: ceramic, 2 mmf ±.25 mmf; 500 vdcw.	RF bridge, L-123. Used with R-101/ARN-6, R-101A/ARN-6 and R-101B/ARN-6	JAN CC21CK020C (or any other temperature coefficient instead of "CK")	Magnavox 250088-71
C-142	AAF #3D9030V-6 ASO #R16-C-7852-505	CAPACITOR, Variable: ceramic; 4 to 30 mmf. Same as C-103.	Trimmer, secondary L-123. Used with R-101/ARN-6 and R-101A/ARN-6		
	or	CAPACITOR, Variable: air dielectric; 3.3 to 23.3 mmf. Same as C-103.	Trimmer, secondary L-123. Used with R-101B/ARN-6		
C-143	AAF #3D9030V-6 ASO #R16-C -7852-505	CAPACITOR, Variable: ceramic; 4 to 30 mmf. Same as C-103.	Trimmer, secondary L-122. Used with R-101/ARN-6 and R-101A/ARN-6		
	or	CAPACITOR, Variable: air dielectric; 3.3 to 23.3 mmf. Same as C-103.	Trimmer, secondary L-122. Used with R-101B/ARN-6		
C-144	AAF #3D9030V-6 ASO #R16-C -7852-505	CAPACITOR, Variable: ceramic; 4 to 30 mmf. Same as C-103.	Trimmer, secondary L-121. Used with R-101/ARN-6 and R-101A/ARN-6		
	or	CAPACITOR, Variable: air dielectric; 3.3 to 23.3 mmf. Same as C-103.	Trimmer, secondary L-121. Used with R-101B/ARN-6		
C-145	AAF #3D9030V-6 ASO #R16-C -7852-505	CAPACITOR, Variable: ceramic; 4 to 30 mmf. Same as C-103.	Trimmer, secondary L-120. Used with R-101/ARN-6 and R-101A/ARN-6		
	or				

TABLE OF REPLACEABLE PARTS (Continued)

MODEL: Radio Compass AN/ARN-6 **MAJOR ASSEMBLY: Radio Compass Unit R-101/ARN-6, R-101A/ARN-6 and R-101B/ARN-6**

Reference Symbol	*Army Stock Number Navy Type Number British Ref. Number*	*Name of Part and Description*	*Function*	*Mfr. and Designation or JAN Type*	*Drawing Or Spec. No.*
		CAPACITOR, Variable: air dielectric; 3.3 to 23.3 mmf. Same as C-103.	Trimmer, secondary L-120. Used with R-101B/ARN-6		
C-146	AAF #3DA250-439 ASO #R16-C -11338-17-20	CAPACITOR, Fixed: paper dielectric; 250,000 mmf. Same as C-117.	Bypass, V-103 plate supply. Used with R-101/ARN-6, R-101A/ARN-6 and R/101B-ARN-6		
C-147	AAF #3D9082-12	CAPACITOR, Fixed: mica dielectric; 12 mmf ±1 mmf. Same as C-105.	Part of secondary tuning L-120, L-123. Used with R-101/ARN-6		
	or AAF #3D9012-50 ASO #R16-C -7863-50-500	CAPACITOR, Fixed: ceramic: 12 mmf ±5%. Same as C-105.	Part of secondary tuning, L-120, L-123. Used with R-101A/ARN-6 and R-101B/ARN-6		
C-148	AAF #3D9018-11	CAPACITOR, Fixed: mica dielectric; 18 mmf ±1 mmf. Same as C-102.	Part of secondary tuning, L-104, all bands. Used with R-101/ARN-6		
	or AAF #3D9018-13 ASO #R16-C -7865-22-500	CAPACITOR, Fixed: ceramic; 18 mmf ±5%. Same as C-102.	Part of secondary tuning, L-104, all bands. Used with R-101A/ARN-6 and R-101B/ARN-6		
C-149	AAF #3D9024-23	CAPACITOR, Fixed: ceramic; 24 mmf. Same as C-108.	Temp. compensation, secondaries of L-104. Used with R-101/ARN-6		
	or	CAPACITOR, Fixed: ceramic; 24 mmf ±5%; 500 vdcw.	Temp. compensation, secondaries of L-104. Used with R-101A/ARN-6	JAN type CC21TH240J	JAN-C-20
	or	CAPACITOR, Fixed: ceramic; 33 mmf ±5%; 500 vdcw.	Temp. compensation, secondaries of L-104. Used with R-101B/ARN-6	CC21RH330J	Magnavox 250088-120
C-150	AAF #3DA10-405 ASO #R16-C -11697-490	CAPACITOR, Fixed: Paper dielectric; 10,000 mmf. Same as C-101.	AVC filter, for V-104, and RF ground, secondaries of L-104. Used with R-101/ARN-6, R-101A/ARN-6 and R-101B/ARN-6.		

C-151	AAF # 3DK-9150-25 ASO # R16-C-9951-500	CAPACITOR, Fixed: mica dielectric; 150 mmf. Same as C-136.	Stage gain compensating. Used with R/101/ARN-6, R-101A/ARN-6 and R-101B/ARN-6		
C-152	AAF # 3D9200-89	CAPACITOR, Fixed: mica dielectric; 200 mmf ±2%. Same as C-137.	Part of primary tuning, L-124. Used with R-101/ARN-6		
	or AAF # 3K2020143 ASO # R16-C-9966-91	CAPACITOR, Fixed: mica; 200 mmf ±2%. Same as C-137.	Part of primary tuning, L-124. Used with R-101A/ARN-6 and R-101B/ARN-6		
C-153	AAF # 3D9018-11	CAPACITOR, Fixed: mica dielectric; 18 mmf ±1 mmf. Same as C-102.	Part of primary tuning, L-124, L-125, L-126. Used with R-101/ARN-6		
	or AAF # 3D9018-13 ASO # R16-C -7865-22-500	CAPACITOR, Fixed: ceramic, 18 mmf ±5%. Same as C-102.	Part of primary tuning, L-124, L-125, L-126. Used with R-101A/ARN-6 and R-101B/ARN-6		
C-154	AAF # 3K2075032 ASO # R16-C-9883-100	CAPACITOR, Fixed: mica dielectric; 75 mmf. Same as C-139.	Part of primary tuning, L-124, L-126. Used with R-101/ARN-6, R-101A/ARN-6 and R-101B/ARN-6		
C-155	AAF # 3DA1-118	CAPACITOR, Fixed: paper dielectric; equal to JAN-CN20A-102M, except has 3-dot color code; 1000 mmf ±20%; 400 vdcw; molded phenolic case; case not over 51/64" x 15/32" x 7/32"; 2 axial wire leads.	RF bypass, grid of V-114. Used with R-101/ARN-6	Tobe-Deutchmann # APC, or Mica-mold # 338; CN20A102M	Fairchild B424-760 and Bendix C220082-1
	or AAF # 3K2510222 ASO # R16-C -10083-82-801	CAPACITOR, Fixed: mica; 1000 mmf ±5%; 500 vdcw.	RF bypass, grid of V-114. Used with R-101A/ARN-6 and R-101B/ARN-6	JAN type CM25B102J	JAN-C-5 Magnavox 257828-1152
C-156	AAF # 3D9002-38 ASO # R16-C-7778-85	CAPACITOR, Fixed: ceramic; 2 mmf. Same as C-141.	RF bridge, L-127. Used with R-101/ARN-6, R-101A/ARN-6 and R-101B/ARN-6		
C-157	AAF # 3D9030V-6 ASO # R16-C-7852-505	CAPACITOR, Variable: ceramic; 4 to 30 mmf. Same as C-103.	Trimmer secondary L-127. Used with R-101/ARN-6 and R-101A/ARN-6		
	or	CAPACITOR, Variable: air dielectric; 3.3 to 23.3 mmf. Same as C-103.	Trimmer, secondary L-127. Used with R-101B/ARN-6		
C-158	AAF # 3D9030V-6 ASO # R16-C-7852-505	CAPACITOR, Variable: ceramic; 4 to 30 mmf. Same as C-103.	Trimmer secondary L-126. Used with R-101/ARN-6 and R-101A/ARN-6		
	or				

TABLE OF REPLACEABLE PARTS (Continued)

MODEL: Radio Compass AN/ARN-6 **MAJOR ASSEMBLY: Radio Compass Unit R-101/ARN-6, R-101A/ARN-6 and R-101B/ARN-6**

Reference Symbol	*Army Stock Number Navy Type Number British Ref. Number*	*Name of Part and Description*	*Function*	*Mfr. and Designation or JAN Type*	*Drawing Or Spec. No.*
		CAPACITOR, Variable: air dielectric; 3.3 to 23.3 mmf. Same as C-103.	Trimmer, secondary L-126. Used with R-101B/ARN-6		
C-159	AAF # 3D9030V-6 ASO # R16-C-7852-505	CAPACITOR, Variable: ceramic; 4 to 30 mmf. Same as C-103.	Trimmer secondary L-125. Used with R-101/ARN-6 and R-101A/ARN-6		
	or				
		CAPACITOR, Variable: air dielectric; 3.3 to 23.3 mmf. Same as C-103.	Trimmer, secondary L-125. Used with R-101B/ARN-6		
C-160	AAF # 3D9030V-6 ASO # R16-C-7852-505	CAPACITOR, Variable: ceramic; 4 to 30 mmf. Same as C-103.	Trimmer secondary L-124. Used with R-101/ARN-6 and R-101A/ARN-6		
	or				
		CAPACITOR, Variable: air dielectric; 3.3 to 23.3 mmf. Same as C-103.	Trimmer, secondary L-124. Used with R-101B/ARN-6		
C-161	AAF # 3DA250-439 ASO # R16-C -11338-17-20	CAPACITOR, Fixed: paper dielectric; 250,000 mmf. Same as C-117.	Bypass, V-104 plate supply. Used with R-101/ARN-6, R-101A/ARN-6 and R-101B/ARN-6		
C-162	AAF # 3D9082-12	CAPACITOR, Fixed: mica dielectric; 12 mmf ±1 mmf. Same as C-105.	Part of secondary tuning, L-124, L-127. Used with R-101/ARN-6		
	or				
	AAF # 3D9012-50 ASO # R16-C -7863-50-500	CAPACITOR, Fixed: ceramic; 12 mmf ±5%. Same as C-105.	Part of secondary tuning, L-124, L-127. Used with R-101A/ARN-6 and R-101B/ARN-6		
C-163	AAF # 3D9024-23	CAPACITOR, Fixed: ceramic; 24 mmf. Same as C-108.	Temp compensation, secondaries of L-105. Used with R-101/ARN-6		
	or				
		CAPACITOR, Fixed: ceramic; 24 mmf ±5%; 500 vdcw.	Temp compensation, secondaries of L-105. Used with R-101A/ARN-6 and R-101B/ARN-6	JAN type CC21TH240J	JAN-C-20
C-164	AAF # 3D9018-11	CAPACITOR, Fixed: mica dielectric; 18 mmf ±1 mmf. Same as C-102.	Part of secondary tuning, L-105, all bands. Used with R-101/ARN-6		
	or				

	AAF #3D9018-13 ASO #R16-C -7865-22-500	CAPACITOR, Fixed: ceramic, 18 mmf ±5%. Same as C-102.	Part of secondary tuning, L-105, all bands. Used with R-101A/ARN-6 and R-101B/ARN-6		
C-165	AAF #3DA10-405 ASO #R16-C -11697-490	CAPACITOR, Fixed: paper dielectric; 10,000 mmf. Same as C-101.	AVC filter, for V-105, and RF ground for secondaries of L-108. Used with R-101/ARN-6, R-101A/ARN-6 and R-101B/ARN-6		
C-166	AAF #3DA250-439 ASO #R16-C -11338-17-20	CAPACITOR, Fixed: paper dielectric; 250,000 mmf. Same as C-117.	Cathode bypass, V-105. Used with R-101/ARN-6, R-101A/ARN-6 and R-101B/ARN-6		
C-167	AAF #3DA250-439 ASO #R16-C -11338-17-20	CAPACITOR, Fixed: paper dielectric; 250,000 mmf. Same as C-117.	Screen bypass, V-105. Used with R-101/ARN-6, R-101A/ARN-6 and R-101B/ARN-6		
C-168	AAF #3DA6-73	CAPACITOR, Fixed: paper dielectric; equal to JAN-CN20A-602M except has 3-dot color code, and reduced voltage rating; 6,000 mmf ±20%; 120 vdcw; molded phenolic case; case not over 51/64" lg x 15/32" wd x 7/32" thk; 2 axial wire leads.	Coupling V-109B to V-107. Used with R-101/ARN-6	Tobe-Deutschmann, #APC, or Micamold #338; CN20A602M	Fairchild B424-762 and Bendix C220082-3
	or AAF #3DA1-118 ASO #R16-C -11189-250	CAPACITOR, Fixed, paper dielectric; 1,000 mmf ±20%; 400 vdcw; molded case; 51/64" lg x 15/32" x 7/32" thk; 2 axial wire lead term.	Coupling used with R-101A/ARN-6 and R-101B/ARN-6	Micamold 338-YL-101	Bendix C220082-1, Fairchild B424-760 and Magnavox 257817-1
C-169	AAF #3DK9045V-2 ASO #R16-C-11923	CAPACITOR, Variable: ceramic; rotary type; single sect; 7 to 45 mmf; 500 vdcw; negative temp coef 500 mmf/mf/°C; 27/32" wd x 3/8" h; solder lug term; two 0.120" diam mtg holes in base, on 7/16" mtg/c; screwdriver slot adjustment; ceramic base.	Trimmer, tertiary T-108. Used with R-101/ARN-6, R-101A/ARN-6 and R-101B/ARN-6	Erie Type N500 TS2A Centralab #822BN	Fairchild C424-9, Bendix C219043-2 and Magnavox 267802-2
C-170	AAF #3D390	CAPACITOR, Fixed: mica dielectric; 200 mmf ±2%. Same as C-137.	Secondary tuning, T-108. Used with R-101/ARN-6		
	or AAF #3K2020143 ASO #R16-C-9966-91	CAPACITOR, Fixed: mica 200 mmf ±2%. Same as C-137.	Secondary tuning, T-108. Used with R-101A/ARN-6 and R-101B/ARN-6		
C-171	AAF #3D390	CAPACITOR, Fixed: mica dielectric; 200 mmf ±2%. Same as C-137.	Tertiary tuning, T-108. Used with R-101/ARN-6		
	or				

TABLE OF REPLACEABLE PARTS (Continued)

MODEL: Radio Compass AN/ARN-6 **MAJOR ASSEMBLY: Radio Compass Unit R-101/ARN-6, R-101A/ARN-6 and R-101B/ARN-6**

Reference Symbol	*Army Stock Number Navy Type Number British Ref. Number*	*Name of Part and Description*	*Function*	*Mfr. and Designation or JAN Type*	*Drawing Or Spec. No.*
	AAF # 3K2020143 ASO # R16-C -9966-91	CAPACITOR, Fixed: mica, 200 mmf ±2%. Same as C-137.	Tertiary tuning, T-108. Used with R-101A/ARN-6 and R-101B/ARN-6		
C-172	AAF # 3D390	CAPACITOR, Fixed: mica dielectric; 200 mmf ±2%. Same as C-137.	Primary tuning, T-108. Used with R-101/ARN-6		
	or AAF # 3K2020143 ASO # R16-C-9966-91	CAPACITOR, Fixed: mica, 200 mmf ±2%. Same as C-137.	Primary tuning, T-108. Used with R-101A/ARN-6 and R-101B/ARN-6		
C-173	AAF # 3DA250-439 ASO # R16-C -11338-17-20	CAPACITOR, Fixed: paper dielectric; 250,000 mmf. Same as C-117.	Bypass, V-105 plate supply. Used with R-101/ARN-6, R-101A/ARN-6 and R-101B/ARN-6		
C-174	AAF # 3DK9020-42 ASO # R16-C -7867-30-50	CAPACITOR, Fixed: ceramic, 20 mmf ±10%; 500 vdcw.	Temp compensating, primaries of T-101. Used with R-101/ARN-6, R-101A/ARN-6 and R-101B/ARN-6	CC21UK200K	JAN-C-20 Magnavox 250088-70
C-175	AAF # 3DK9020-42 ASO # R16-C -7867-30-50	CAPACITOR, Fixed: ceramic; 20 mmf ±10%. Same as C-174.	Temp compensating, secondaries of T-101. Used with R-101/ARN-6, R-101A/ARN-6 and R-101B/ARN-6		
C-176	AAF # 3D9300-46	CAPACITOR, Fixed: mica dielectric; 300 mmf ±2%; 500 vdcw: temp coef letter E; case size 20 per JAN-C-5, 51/64" x 15/32" x 7/32" max; 2 axial wire leads.	Secondary tuning, T-109. Used with R-101/ARN-6	Micamold PO 300 ±2% E	Fairchild F26-CM20E301G
	or AAF # 3K2030143 ASO # R16-C -9994-11-100	CAPACITOR, Fixed: mica; 300 mmf ±2%; 500 vdcw.	Secondary tuning, T-109. Used with R-101A/ARN-6 and R-101B/ARN-6	JAN type CM20D301G	JAN-C-5 Magnavox 257827-3037
C-177	AAF # 3D9300-46	CAPACITOR, Fixed: ceramic; 300 mmf ±2%. Same as C-176.	Tertiary tuning, T-109. Used with R-101/ARN-6		
	or AAF # 3K2030143 ASO # R16-C -9994-11-100	CAPACITOR, Fixed: mica; 300 mmf ±2%. Same as C-176.	Tertiary tuning, T-109. Used with R-101A/ARN-6 and R-101B/ARN-6		

C-178	AAF # 3D9045V-5 ASO # R16-C-11923	CAPACITOR, Variable: ceramic; 7 to 45 mmf. Same as C-169.	Trimmer, tertiary T-109. Used with R-101/ARN-6, R-101A/ARN-6 and R-101B/ARN-6		
C-179	AAF # 3D9300-46	CAPACITOR, Fixed: mica dielectric; 300 mmf ±2%. Same as C-176.	Primary tuning, T-109. Used with R-101/ARN-6		
	or AAF # 3K2030143 ASO # R16-C -9994-11-100	CAPACITOR, Fixed: mica; 300 mmf ±2%. Same as C-176.	Primary tuning, T-109. Used with R-101A/ARN-6 and R-101B/ARN-6		
C-180	AAF # 3DA250-439 ASO # R16-C -11338-17-20	CAPACITOR, Fixed: paper dielectric; 250,000 mmf. Same as C-117.	Screen bypass, V-106. Used with R-101/ARN-6, R-101A/ARN-6 and R-101B/ARN-6		
C-181	AAF # 3DA250-439 ASO # R16-C -11338-17-20	CAPACITOR, Fixed: paper dielectric: 250,000 mmf. Same as C-117.	Bypass, V-106 plate supply. Used with R-101/ARN-6, R-101A/ARN-6 and R-101B/ARN-6		
C-182	AAF # 3D390	CAPACITOR, Fixed: mica dielectric; 200 mmf ±2%. Same as C-137.	Primary tuning, T-110. Used with R-101/ARN-6		
	or AAF # 3K2020143 ASO # R16-C-9966-91	CAPACITOR, Fixed: mica; 200 mmf ±2%. Same as C-137.	Primary tuning, T-110. Used with R-101A/ARN-6 and R-101B/ARN-6		
C-183	AAF # 3DK9020-42 ASO # R16-C -7867-30-50	CAPACITOR, Fixed: ceramic; 20 mmf. Same as C-174.	Temp compensating, primaries of T-102. Used with R-101/ARN-6, R-101A/ARN-6 and R-101B/ARN-6		
C-184	AAF # 3D9045V-5 ASO # R16-C-11923	CAPACITOR, Variable: ceramic; 7 to 45 mmf. Same as C-169.	Trimmer, tertiary T-110. Used with R-101/ARN-6, R-101A/ARN-6 and R-101B/ARN-6		
C-185	AAF # 3D390	CAPACITOR, Fixed: mica dielectric; 200 mmf ±2%. Same as C-137.	Tertiary tuning, T-110. Used with R-101/ARN-6		
	or AAF # 3K2020143 ASO # R16-C-9966-91	CAPACITOR, Fixed: mica; 200 mmf ±2%. Same as C-137.	Tertiary tuning, T-110. Used with R-101A/ARN-6 and R-101B/ARN-6		
C-186	AAF # 3D390 or	CAPACITOR, Fixed: mica dielectric; 200 mmf ±2%. Same as C-137.	Secondary tuning, T-110. Used with R-101/ARN-6		

TABLE OF REPLACEABLE PARTS (Continued)

MODEL: Radio Compass AN/ARN-6 **MAJOR ASSEMBLY: Radio Compass Unit R-101/ARN-6, R-101A/ARN-6 and R-101B/ARN-6**

Reference Symbol	*Army Stock Number Navy Type Number British Ref. Number*	*Name of Part and Description*	*Function*	*Mfr. and Designation or JAN Type*	*Drawing Or Spec. No.*
	AAF # 3K2020143 ASO # R16-C-9966-91	CAPACITOR, Fixed: mica; 200 mmf ±2%. Same as C-137.	Secondary tuning, T-110. Used with R-101A/ARN-6 and R-101B-ARN-6		
C-187	AAF # 3DK9020-42 ASO # R16-C -7867-30-50	CAPACITOR, Fixed: ceramic; 20 mmf. Same as C-174.	Temp compensating, secondaries of T-102. Used with R-101/ARN-6, R-101A/ARN-6 and R-101B/ARN-6		
C-188	AAF # 3D9300-46 or AAF # 3K2030143 ASO # R16-C -9994-11-100	CAPACITOR, Fixed: mica dielectric; 300 mmf ±2%. Same as C-176. CAPACITOR, Fixed: mica; 300 mmf ±2%. Same as C-176.	Secondary tuning, T-111. Used with R-101/ARN-6 Secondary tuning, T-111. Used with R-101A/ARN-6 and R-101B/ARN-6		
C-189	AAF # 3D9300-46 or AAF # 3K2030143 ASO # R16-C -9994-11-100	CAPACITOR, Fixed: mica dielectric; 300 mmf ±2%. Same as C-176. CAPACITOR, Fixed: mica; 300 mmf ±2%. Same as C-176.	Tertiary tuning, T-111. Used with R-101/ARN-6 Tertiary tuning, T-111. Used with R-101A/ARN-6 and R-101B/ARN-6		
C190	AAF # 3D9045V-5 ASO # R16-C-11923	CAPACITOR, Variable: ceramic 7 to 45 mmf. Same as C-169.	Trimmer, tertiary, T-111. Used with R-101/ARN-6, R-101A/ARN-6 and R-101B/ARN-6		
C-191	AAF # 3D9300-46 or AAF # 3K2030143 ASO # R16-C -9994-11-100	CAPACITOR, Fixed: mica dielectric; 300 mmf ±2%. Same as C-176. CAPACITOR, Fixed: mica; 300 mmf ±2%. Same as C-176.	Primary tuning, T-111. Primary tuning, T-111. Used with R-101/ARN-6, R-101A/ARN-6 and R-101B/ARN-6		
C-192	AAF # 3D9015-5 or	CAPACITOR, Fixed: mica dielectric; 15 mmf. Same as C-132.	Part of plate coil tuning, L-131. Used with R-101/ARN-6		

	AAF # 3D9015-109 ASO # R16-C-9808-37	CAPACITOR, Fixed: mica; 15 mmf ±5%, 300 vdcw; temp coef "E"; 1/2" lg x 9/32" wd x 11/64" thk; molded.	Part of plate coil tuning, L-131. Used with R-101A/ARN-6	Electromotive type CM-15	Bendix C-220132-4
	or	CAPACITOR, Fixed: ceramic; 27 mmf ±5%; 500 vdcw.	Part of plate coil tuning, L-131. Used with R-101B/ARN-6	JAN type CC26CH270J	Magnavox 250088-128
C-193	AAF # 3DA250-439 ASO # R16-C -11338-17-20	CAPACITOR, Fixed: paper dielectric; 250,000 mmf. Same as C-117.	Screen bypass, V-107. Used with R-101/ARN-6, R-101A/ARN-6 and R-101B/ARN-6		
C-194	AAF # 3DA10-405 ASO # R16-C -11697-490	CAPACITOR, Fixed: paper dielectric; 10,000 mmf. Same as C-101.	AVC filter network, for V-103. Used with R-101/ARN-6, R-101A/ARN-6 and R-101B/ARN-6		
C-195	AAF # 3DA250-439 ASO # R16-C -11338-17-20	CAPACITOR, Fixed: paper dielectric; 250,000 mmf. Same as C-117.	Bypass, V-107 plate supply. Used with R-101/ARN-6, R-101A/ARN-6 and R-101B/ARN-6		
C-196	AAF # 3D9100-216	CAPACITOR, Fixed: mica dielectric; 100 mmf ±2%; 509 vdcw; temp coef letter E; case size 20 per JAN-C-5, 51/64" x 15/32" x 7/32" max; 2 axial wire leads.	Primary tuning, T-114. Used with R-101/ARN-6	Micamold PO 100 ±2% E	Fairchild F26-CM20E101G
	or AAF # 3K2010133 ASO # R16-C-9924-39	CAPACITOR, Fixed: mica; 100 mmf ±2%; 500 vdcw.	Primary tuning, T-113. Used with R-101A/ARN-6 and R-101B/ARN-6	JAN type CC20C101G CM20C101G	JAN-C-5 Magnavox 257827-2025
C-197	AAF # 3D390	CAPACITOR, Fixed: mica dielectirc; 200 mmf ±2%. Same as C-137.	Secondary tuning, T-112. Used with R-101/ARN-6		
	or AAF # 3K2020143 ASO # R16-C-9966-91	CAPACITOR, Fixed: mica; 200 mmf ±2%. Same as C-137.	Secondary tuning, T-112. Used with R-101A/ARN-6 and R-101B/ARN-6		
C-198	AAF # 3DK9350-11 ASO # R16-C-10000-3	CAPACITOR, Fixed: mica dielectric; 350 mmf ±2%; 500 vdcw; temp coef letter E; case size 20 per JAN-C-5, 51/64" x 15/32" x 7/32" max; 2 axial wire leads.	Secondary tuning, T-113. Used with R-101/ARN-6, R-101A/ARN-6 and R-101B/ARN-6	Erie type K Electromotive CM20D351G	Fairchild F26-CM20E351G, Bendix C220076-13 and Magnavox 257818-2
C-199	AAF # 3K2075032 ASO # R16-C-9883-100	CAPACITOR, Fixed: mica dielectric; 75 mmf. Same as C-139.	Coupling, T-103 to V-108 (AVC diode). Used with R-101/ARN-6, R-101A/ARN-6 and R-101B/ARN-6		

TABLE OF REPLACEABLE PARTS (Continued)

MODEL: Radio Compass AN/ARN-6 **MAJOR ASSEMBLY: Radio Compass Unit R-101/ARN-6, R-101A/ARN-6 and R-101B/ARN-6**

Reference Symbol	*Army Stock Number Navy Type Number British Ref. Number*	*Name of Part and Description*	*Function*	*Mfr. and Designation or JAN Type*	*Drawing Or Spec. No.*
C-1100	AAF # 3K2010122 ASO # R16-C -9924-56-45	CAPACITOR, Fixed: mica dielectric; 100 mmf ±5%; 500 vdcw; temp coef letter D; size 20 case is 51/64" lg x 15/32" wd x 7/32" thk; 2 axial wire leads.	IF filter, 2nd detector circuit to 1st AF. Used with R-101/ARN-6, R-101A/ARN-6 and R-101B/ARN-6	JAN type CM20B101J	JAN-C-5 Magnavox 257827-1125
C-1101	AAF # 3D9300-46	CAPACITOR, Fixed: mica dielectric; 300 mmf ±2%. Same as C-176.	Primary tuning, T-112. Used with R-101/ARN-6		
	or AAF # 3K2030143 ASO # R16-C -9994-11-100	CAPACITOR, Fixed: mica; 300 mmf ±2%. Same as C-176.	Primary tuning, T-112. Used with R-101A/ARN-6 and R-101B/ARN-6		
C-1102	AAF # 3D9100-216	CAPACITOR, Fixed: mica dielectric; 100 mmf ±2%. Same as C-196.	IF filter, 2nd detector circuit to 1st AF. Used with R-101/ARN-6		
	or AAF # 3K2010133 ASO # R16-C-9924-39	CAPACITOR, Fixed: mica; 100 mmf ±2%. Same as C-196.	IF filter, 2nd detector circuit to 1st AF. Used with R-101A/ARN-6 and R-101B/ARN-6		
C-1103	AAF # 3DA10-405 ASO # R16-C -11697-490	CAPACITOR, Fixed: paper dielectric; 10,000 mmf. Same as C-101.	AVC filter network, for V-104, V-105. Used with R-101/ARN-6, R-101A/ARN-6 and R-101B/ARN-6		
C-1104	AAF # 3DA10-405 ASO # R16 C -11697-490	CAPACITOR, Fixed: paper dielectric; 10,000 mmf. Same as C-101.	AVC filter network, for V-104, V-105. Used with R-101/ARN-6, R-101A/ARN-6 and R-101B/ARN-6		
C-1105	AAF # 3DA10-405 ASO # R16-C -11697-490	CAPACITOR, Fixed: paper dielectric; 10,000 mmf. Same as C-101.	AVC filter network, for V-103. Used with R-101/ARN-6, R-101A/ARN-6 and R-101B/ARN-6		
C-1106	AAF # 3D9055-12 ASO # R16-C-9873-83	CAPACITOR, Fixed: mica: 55 mmf ±5%; 500 vdcw; temp coef letter B; CM-20 case size per JAN-C-5, 51/64" lg x 15/32" wd x 7/32" thk; molded phenolic case; 2 wire lead term.	IF bypass, grid of V-108. Used with R-101/ARN-6, R-101A/ARN-6 and R-101B/ARN-6	Micamold type DXm Electromotive CM20B550J	Bendix C220076-15 and Magnavox 257818-3

C-1107	AAF # 3DK9150-25 ASO # R16-C-9951-500	CAPACITOR, Fixed: mica dielectric; 150 mmf. Same as C-136.	IF bypass plate of V-108. Used with R-101/ARN-6, R-101A/ARN-6 and R-101B/ARN-6		
C-1108	AAF # 3DA250-439 ASO # R16-C -11338-17-20	CAPACITOR, Fixed: paper dielectric; 250,000 mmf. Same as C-117.	Audio output, cathode output circuit, V-108. Used with R-101/ARN-6, R-101A/ARN-6 and R-101B/ARN-6		
C-1109	AAF # 3K2024132	CAPACITOR, Fixed: mica dielectric; 240 mmf ±10%; 500 vdcw; temp coef letter C; case size 20 per JAN-C-5, 51/64" x 15/32" x 7/32" max; 2 axial wire leads. (Identical with JAN-CM20C 241J, except increased capacity tolerance.)	Grid coupling L-102 to V-102B. Used with R-101/ARN-6	Micamold	Fairchild F26-CM20C241K
	or AAF # 3K2024122 ASO # R16-C -9973-4-100	CAPACITOR, Fixed: mica, 240 mmf ±5%. Same as C-115.	Coupling, RF Osc to 1st detector. Used with R-101A/ARN-6 and R-101B/ARN-6		
C-1110	AAF # 3D9030V-6 ASO # R16-C-7852-505	CAPACITOR, Variable: ceramic; 4 to 30 mmf. Same as C-103.	Trimmer, plate coil, L-131. Used with R-101/ARN-6 and R-101A/ARN-6		
	or	CAPACITOR, Variable: air dielectric, 3.3 to 23.3 mmf. Same as C-103.	Trimmer, plate coil, L-131. Used with R-101B/ARN-6		
C-1111	AAF # 3D9030V-6 ASO # R16-C-7852-505	CAPACITOR, Variable: ceramic; 4 to 30 mmf. Same as C-103.	Trimmer, plate coil, L-130. Used with R-101/ARN-6 and R-101A/ARN-6		
	or	CAPACITOR, Variable: air dielectric; 3.3 to 23.3 mmf. Same as C-103.	Trimmer, plate coil L-130. Used with R-101B/ARN-6		
C-1112	AAF # 3D9038-1 ASO # R16-C -9842-82-200	CAPACITOR, Fixed: mica dielectric; 38 mmf. Same as C-121.	Part of plate coil tuning, L-130. Used with R-101/ARN-6 and R-101A/ARN-6		
	or	CAPACITOR, Fixed: ceramic; 56 mmf ±2%; 500 vdcw.	Part of plate coil tuning, L-130. Used with R-101B/ARN-6	JAN type CC26RH560G	Magnavox 250088-130
C-1113	AAF # 3D9030V-6 ASO # R16-C-7852-505	CAPACITOR, Variable: ceramic; 4 to 30 mmf. Same as C-103.	Trimmer, plate coil, L-129. Used with R-101/ARN-6 and R-101A/ARN-6		
	or	CAPACITOR, Variable: air dielectric; 3.3 to 23.3 mmf. Same as C-103.	Trimmer, plate coil, L-129. Used with R-101B/ARN-6		

TABLE OF REPLACEABLE PARTS (Continued)

MODEL: Radio Compass AN/ARN-6 **MAJOR ASSEMBLY: Radio Compass Unit R-101/ARN-6, R-101A/ARN-6 and R-101B/ARN-6**

Reference Symbol	*Army Stock Number Navy Type Number British Ref. Number*	*Name of Part and Description*	*Function*	*Mfr. and Designation or JAN Type*	*Drawing Or Spec. No.*
C-1114	AAF # 3K2024032	CAPACITOR, Fixed: silver mica; 24 mmf ±5%; 500 vdcw.	Part of plate coil tuning, L-129. Used with R-101/ARN-6	JAN type CM20C240J	JAN-C-5
	or ASO # R16-C-9814-78	CAPACITOR, Fixed: mica; 24 mmf ±5%; 300 vdcw; temp coef letter E; 1/2" lg x 9/32" wd x 11/64" thk; molded bakelite case; 2 wire lead term.	Part of plate coil tuning, L-129. Used with R-101A/ARN-6	Electromotive Type CM-15	Bendix Part No. C220132-8
	or	CAPACITOR, Fixed: ceramic; 33 mmf ±5%; 500 vdcw.	Part of plate coil tuning, L-129. Used with R-101B/ARN-6	JAN type CC21SH330J	Magnavox 250088-124
C-1115	AAF # 3D9030V-6 ASO # R16-C-7852-505	CAPACITOR, Variable: ceramic; 4 to 30 mmf. Same as C-103.	Trimmer, plate coil, L-128. Used with R-101/ARN-6 and R-101A/ARN-6		
	or	CAPACITOR, Variable: air dielectric; 3.3 to 23.3 mmf. Same as C-103.	Trimmer, plate coil L-128. Used with R-101B/ARN-6		
C-1116	AAF # 3D9240-18	CAPACITOR, Fixed: silver mica dielectric; 240 mmf ±2%; 500 vdcw; temp coef letter E; 11/16" lg x 7/16" wd x 3/16" thk; 2 axial wire leads.	Part of plate coil, L-129. Used with R-101/ARN-6	Micamold PO 240 ±2%; E	Fairchild F26-CM20E241G
	or AAF # 3K2024143 ASO # R16-C-9973-2-5	CAPACITOR, Fixed: mica; 240 mmf ±2%; 500 vdcw.	Trimmer, plate coil, L-128. Used with R-101A/ARN-6 and R-101B/ARN-6	JAN type CM20D241G	
C-1117	AAF # 3DA250-439 ASO # R16-C -11338-17-20	CAPACITOR, Fixed: paper dielectric; 250,000 mmf. Same as C-117.	Bypass, V-109A late supply. Used with R-101/ARN-6, R-101A/ARN-6 and R-101B/ARN-6		
C-1118	AAF # 3D9480-3 ASO # R16-C -10017-24-960	CAPACITOR, Fixed: silver mica dielectric; 480 mmf ±2%; 500 vdcw; 11/16" lg x 7/16" wd x 3/16" thk; 2 axial wire leads.	Part of plate coil tuning, L-106, bands 2, 3, and 4. Used with R-101/ARN-6, R-101A/ARN-6 and R-101B/ARN-6	Micamold PO 480 ±2%; E Electromotive CM20D481G	Fairchild F26 CM20E481G, * Bendix C220076-18 and Magnavox 257818-4
C-1119	AAF # 3K2556153 ASO # R16-C -10029-20-51	CAPACITOR, Fixed: silver mica; 560 mmf ±2%; 500 vdcw.	Part of plate coil tuning, L-106, bands 3 and 4. Used with R-101/ARN-6, R-101A/ARN-6 and R-101B/ARN 6	JAN type CM25E561G	JAN-C-5 Magnavox 257828-4045

C-1120	AAF # 3D9830-1 ASO # R16-C -10075-10-5	CAPACITOR, Fixed: silver mica dielectric; 830 mmf ±2%; 500 vdcw; temp coef letter E; case size 25 per JAN-C-5, 1-1/16" x 15/32" x 7/32" max; 2 axial wire leads.	Part of plate coil tuning, L-106, band 4. Used with R-101/ARN-6, R-101A/ARN-6 and R-101B/ARN-6	Dubilier 2RS Aerovox 1479S	Fairchild F26-CM25E831G, Bendix C220076-19 and Magnavox 257818-5.
C-1121	AAF # 3D9270-9	CAPACITOR, Fixed: silver mica dielectric; 270 mmf ±2%; 500 vdcw; 11/16" lg x 7/16" wd x 3/16" thk; 2 axial wire leads.	Part of plate coil tuning, L-106, all bands. Used with R-101/ARN-6	Micamold PO 270 ±2%; E	Fairchild F26-CM20E271G
	or AAF # 3K2027143 ASO # R16-C-9990-151	CAPACITOR, Fixed: mica; 270 mmf ±2%; 500 vdcw.	Part of plate coil tuning, L-106, all bands. Used with R-101A/ARN-6 and R-101B/ARN-6	JAN type CM20D271G	JAN-C-5 Magnavox 257827-3036
C-1122	AAF # 3D9024-23	CAPACITOR, Fixed: ceramic; 24 mmf. Same as C-108.	Temp compensation, plate coils, L-106. Used with R-101/ARN-6		
	or	CAPACITOR, Fixed: ceramic; 24 mmf ±5%; 500 vdcw.	Temp compensation, plate coils, L-106. Used with R-101A/ARN-6	JAN type CC21TH240J	JAN-C-20
	or	CAPACITOR, Fixed: ceramic; 27 mmf ±5%; 500 vdcw.	Temp. compensation, plate coils, L-106. Used with R-101B/ARN-6	JAN type CC26CH270J	Magnavox 250088-128
C-1123	AAF # 3K2024132	CAPACITOR, Fixed: mica dielectric; 240 mmf ±10%. Same as C-1109.	Grid capacitor RF Osc L-106. Used with R-101/ARN-6		
	or AAF # 3K2024122 ASO # R16-C -9973-4-100	CAPACITOR, Fixed: mica; 240 mmf ±5%. Same as C-115.	Grid capacitor RF Osc L-106. Used with R-101A/ARN-6 and R-101B/ARN-6		
C-1124	AAF # 3DA250-439 ASO # R16-C -11338-17-20	CAPACITOR, Fixed: paper dielectric; 250,000 mmf. Same as C-117.	Bypass, V-109B plate. Used with R-101/ARN-6, R-101A/ARN-6 and R-101B/ARN-6		
C-1125	AAF # 3DA100-908 ASO # R16-C-11299-66	CAPACITOR, Fixed: paper dielectric; 100,000 mmf. Same as C-129.	Resonates L-107A for tone osc. Used with R-101/ARN-6, R-101A/ARN-6 and R-101B/ARN-6		
C-1126	AAF # 3DB50-78 ASO # R16-C -9692-67-700	CAPACITOR, Fixed: electrolytic; 50 mf; temp range −40° to +85°; 50 vdcw.	Cathode bypass, V-115 and V-116. Used with R-101/ARN-6, R-101A/ARN-6 and R-101B/ARN-6	JAN type CE63C500G	JAN-C-62 Magnavox 277802-1

TABLE OF REPLACEABLE PARTS (Continued)

MODEL: Radio Compass AN/ARN-6 **MAJOR ASSEMBLY: Radio Compass Unit R-101/ARN-6, R-101A/ARN-6 and R-101B/ARN-6**

Reference Symbol	*Army Stock Number Navy Type Number British Ref. Number*	*Name of Part and Description*	*Function*	*Mfr. and Designation or JAN Type*	*Drawing Or Spec. No.*
C-1127	AAF # 3DB50-78 ASO # R16-C -9692-67-700	CAPACITOR, Fixed: electrolytic; 50 mf. Same as C-1126.	Plate and screen supply filter. Used with R-101/ARN-6, R-101A/ARN-6 and R-101B/ARN-6		
C-1128	AAF # 3D390 or AAF # 3K2020143 ASO # R16-C-9966-91	CAPACITOR, Fixed: mica dielectric; 200 mmf ±2%. Same as C-137. CAPACITOR, Fixed: mica; 200 mmf ±2%. Same as C-137.	Resonating, T-115. Used with R-101/ARN-6 Resonating T-115. Used with R-101A/ARN-6 and R-101B/ARN-6		
C-1129	AAF # 3DK9350 ASO # R16-C-10000-3	CAPACITOR, Fixed: mica dielectric; 350 mmf ±2%. Same as C-198.	Resonating, T-116. Used with R-101/ARN-6, R-101A/ARN-6 and R-101B/ARN-6		
C-1130	AAF # 3DK9020-42 ASO # R16-C -7867-30-50	CAPACITOR, Fixed: ceramic; 20 mmf. Same as C-174.	Temp compensating, all bands of T-104. Used with R-101/ARN-6, R-101A/ARN-6 and R-101B/ARN-6		
C-1131	AAF # 3D9002-38 ASO # R16-C-7778-85	CAPACITOR, Fixed: ceramic; 2 mmf. Same as C-141.	BFO coupling to V-103. Used with R-101/ARN-6, R-101A/ARN-6 and R-101B/ARN-6		
C-1132	AAF # 3DA250-439 ASO # R16-C -11338-17-20	CAPACITOR, Fixed: paper dielectric; 250,000 mmf. Same as C-117.	Bypass, V-110A plate. Used with R-101/ARN-6, R-101A/ARN-6 and R-101B/ARN-6		
C-1133	AAF # 3DK9150-25 ASO # R16-C-9951-500	CAPACITOR, Fixed: mica dielectric; 150 mmf. Same as C-136.	Plate bypass V-110B. Used with R-101/ARN-6, R-101A/ARN-6 and R-101B/ARN-6		
C-1134	AAF # 3K2010142 or AAF # 3K2010122 ASO # R16-C -9924-56-45	CAPACITOR, Fixed: mica dielectric; 100 mmf. Same as C-1100. CAPACITOR, Fixed: mica; 100 mmf ±5%. Same as C-1100.	Audio filter system, input to V-110B. Used with R-101/ARN-6 Audio filter system, input to V-110B. Used with R-101A/ARN-6 and R-101B/ARN-6		

C-1135	AAF # 3K2010142	CAPACITOR, Fixed: mica dielectric; 100 mmf. Same as C-1100.	Audio filter system, input to V-110B. Used with R-101/ARN-6		
	or AAF # 3K2010122 ASO # R16-C -9924-56-45	CAPACITOR, Fixed: mica; 100 mmf ±5%. Same as C-1100.	Audio filter system, input to V-110B. Used with R-101A/ARN-6 and R-101B/ARN-6		
C-1136	AAF # 3DA10-405 ASO # R16-C -11697-490	CAPACITOR, Fixed: paper dielectric; 10,000 mmf. Same as C-101.	Audio feedback network, between T-105B and V-110B. Used with R-101/ARN-6, R/101A-ARN-6 and R-101B/ARN-6		
C-1137	AAF # 3DA20-85.1 ASO # R16-C-11255-52	CAPACITOR, Fixed: paper dielectric; 20,000 mmf ±10%; 200 vdcw; molded yellow mica-filled phenolic case; case is not over 1-3/8" lg x 41/64" wd x 9/32" thk; 2 axial wire leads.	Audio feedback network, between T-105B and V-110B. Used with R-101/ARN-6, R-101A/ARN-6 and R-101B/ARN-6	Micamold # 340YL112	Fairchild B424-764, Bendix C220082-5 and Magnavox 257817-5
C-1138	AAF # 3DA10-405 ASO # R16-C -11697-490	CAPACITOR, Fixed: paper dielectric; 10,000 mmf. Same as C-101.	Audio feedback network, between T-105B and V-110B. Used with R-101/ARN-6, R-101A/ARN-6 and R-101B/ARN-6		
C-1139	AAF # 3K2510241	CAPACITOR, Fixed: silver mica dielectric; 1,000 mmf ±10%; 500 vdcw.	Grid input capacitor, V-110. Used with R-101/ARN-6	JAN type CM25D102K	JAN-C-5
	or AAF # 3K2510221 ASO # R16-C-10084-19	CAPACITOR, Fixed mica; 1,000 mmf ±10%; 500 vdcw.	Grid input capacitor, V-110. Used with R-101A/ARN-6 and R-101B/ARN-6	JAN type CM25B102K	JAN-C-5 Magnavox 257828-1252
C-1140		CAPACITOR, Fixed: paper dielectric; 100,000 mmf. Non-replaceable component of T-105.	Audio bypass for grid bias resistor R-172. Used with R-101/ARN-6, R-101A/ARN-6 and R-101B/ARN-6		
C-1141	AAF # 3DA1-118	CAPACITOR, Fixed: paper dielectric; 1,000 mmf. Same as C-168.	High frequency bypass, across secondary of T-105A, for anti-howl. Used with R-101/ARN-6, R-101A/ARN-6 and R-101B/ARN-6		
C-1142	AAF # 3DA20-85.1 ASO # R16-C-11255-52	CAPACITOR, Fixed: paper dielectric; 20,000 mmf. Same as C-1137.	Audio response modifier, across pri of T-105B. Used with R-101/ARN-6, R-101A/ARN-6 and R-101B/ARN-6		

TABLE OF REPLACEABLE PARTS (Continued)

MODEL: Radio Compass AN/ARN-6 **MAJOR ASSEMBLY: Radio Compass Unit R-101/ARN-6, R-101A/ARN-6 and R-101B/ARN-6**

Reference Symbol	*Army Stock Number Navy Type Number British Ref. Number*	*Name of Part and Description*	*Function*	*Mfr. and Designation or JAN Type*	*Drawing Or Spec. No.*
C-1143	AAF # 3DA10-405 ASO # R16-C -11697-490	CAPACITOR, Fixed: paper dielectric; 10,000 mmf. Same as C-101.	Bypass, plate lead of V-113B. Used with R-101/ARN-6, R-101A/ARN-6 and R-101B/ARN-6		
C-1144	AAF # 3DA1-118 ASO # R16-C -11189-250	CAPACITOR, Fixed: paper dielectric; 1,000 mmf. Same as C-168.	Grid bypass, V-113B. Used with R-101/ARN-6, R-101A/ARN-6 and R-101B/ARN-6		
C-1145	AAF # 3DA-50-341 ASO # R16-C-11292	CAPACITOR, Fixed: paper dielectric; 50,000 mmf ±10%; 400 vdcw; 1-15/32" lg x 49/64" wd x 13/32" thk; axial wire leads.	Grid audio coupling V-108. Used with R-101/ARN-6, R-101A/ARN-6 and R-101B/ARN-6	Micamold 345-105	Fairchild B424-768, Bendix C220082-9 and Magnavox 257817-9
C-1146		CAPACITOR, Fixed: 100,000 mmf; non-replaceable component of T-106.	100-cycle resonating primary of T-106B. Used with R-101/ARN-6, R-101A/ARN-6 and R-101B/ARN-6		
C-1147		CAPACITOR, Fixed: 100,000 mmf; non-replaceable component of T-106.	100-cycle resonating secondary of T-106B. Used with R-101/ARN-6, R-101A/ARN-6 and R-101B/ARN-6		
C-1148	AAF # 3DA10-364 or AAF # 3K3510322 ASO # R16-C-10492-51	CAPACITOR, Fixed: paper dielectric; 10,000 mmf. Same as C-101. CAPACITOR, Fixed: mica; 10,000 mmf ±5%. Same as C-119.	Coupling, output of T-106B. Used with R-101/ARN-6 Coupling, output of T-106B. Used with R-101A/ARN-6 and R-101B/ARN-6		
C-1149	AAF # 3DA250-439 ASO # R16-C -11338-17-20	CAPACITOR, Fixed: paper dielectric; 250,000 mmf. Same as C-117.	Bypass for common heater supply lead. Used with R-101/ARN-6, R-101A/ARN-6 and R-101B/ARN-6		

C-1150	AAF # 3DB2-121 ASO # R16-C -11338-17-20	CAPACITOR, Fixed: paper dielectric; 2 sect; sect A—1 mf ±10%; sect B—2 mf ±10% 75 vdcw both sect; hermetically sealed metal can; 3-1/4" lg x 1-1/16" wd x 1-7/8" h; oil impregnated and partially filled; three solder lugs located on end; sect A internally grounded to metal can; other lead connected to term 1; sect B outside foil connected to term 2, other lead connected to term 3; 2 # 6-32 tapped mtg holes on 3-29/32" mtg/c.	Loop motor phasing B-701. Used with R-101/ARN-6, R-101A/ARN-6 and R-101B/ARN-6	Electrical utilities # 10964	Fairchild D424-99, Bendix L220080-1 and Magnavox 257816-1
C-1151	AAF # 3DA10-405 ASO # R16-C -11697-490	CAPACITOR, Fixed: paper, 10,000 mmf ±10%; 300 vdcw. Same as C-101.	Vibrator "hash" filter. Used with R-101/ARN-6, R-101A/ARN-6 and R-101B/ARN-6		
C-1152	AAF # 3DA1-204 ASO # R16-C-8385-100	CAPACITOR, Fixed: ceramic dielectric; 1,000 mmf +30% −10% at 25°C; 500 vdcw; 5/8" lg bushing type with two axial leads as fed through terminals, other terminal being the mtg bushing; mounts by means of # 12-28 thd bushing 9/32" lg with nut, uninsulated; overall length 1-1/16".	HF noise filter input lead to Y-102. Used with R-101/ARN-6, R-101A/ARN-6 and R-101B/ARN-6	Erie Type 700B Hi "k" Ceramicon	Fairchild C424-926, Bendix C220077-1 and Magnavox 257808-1
C-1153	AAF # 3DA1-204 ASO # R16-C-8385-100	CAPACITOR, Fixed: ceramic dielectric; 1,000 mmf at 25°C. Same as C-1152.	HF noise filter, output lead from Y-102. Used with R-101/ARN-6, R-101A/ARN-6 and R-101B/ARN-6		
C-1154	AAF # 3DA1-204 ASO # R16-C-8385-100	CAPACITOR, Fixed: ceramic dielectric; 1,000 mmf at 25°C. Same as C-1152.	HF noise filter, output lead from Y-102. Used with R-101/ARN-6, R-101A/ARN-6 and R-101B/ARN-6		
C-1155	AAF # 3DA100-908 ASO # R16-C-11299-66	CAPACITOR, Fixed: paper dielectric; 100,000 mmf. Same as C-129.	Noise filter system for Y-101. Used with R-101/ARN-6, R-101A/ARN-6 and R-101B/ARN-6		
C-1156	AAF # 3DA50-341 ASO # R16-C-11292	CAPACITOR, Fixed: paper dielectric; 50,000 mmf. Same as C-1145.	Noise filter system for Y-101. Used with R-101/ARN-6, R-101A/ARN-6 and R-101B/ARN-6		
C-1157	AAF # 3AD250-439 ASO # R16-C -11338-17-20	CAPACITOR, Fixed: paper dielectric; 250,000 mmf. Same as C-117.	Noise filter system for Y-101. Used with R-101/ARN-6, R-101A/ARN-6 and R-101B/ARN-6		

TABLE OF REPLACEABLE PARTS (Continued)

MODEL: Radio Compass AN/ARN-6 **MAJOR ASSEMBLY: Radio Compass Unit R-101/ARN-6, R-101A/ARN-6 and R-101B/ARN-6**

Reference Symbol	*Army Stock Number Navy Type Number British Ref. Number*	*Name of Part and Description*	*Function*	*Mfr. and Designation or JAN Type*	*Drawing Or Spec. No.*
C-1158	AAF # 3DA50-341 ASO # R16-C-11292	CAPACITOR, Fixed: paper dielectric; 50,000 mmf. Same as C-1145.	Noise filter for Y-101. Used with R-101/ARN-6, R-101A/ARN-6 and R-101B/ARN-6		
C-1159	AAF # 3DA10-364	CAPACITOR, Fixed: paper dielectric; 10,000 mmf. Same as C-101.	Modulator voltage phasing network (in Y-101). Used with R-101/ARN-6		
	or AAF # 3K3510322 ASO # R16-C-10492-51	CAPACITOR, Fixed: mica, 10,000 mmf ±5%. Same as C-119.	Modulator voltage phasing network (in Y-101). Used with R-101A/ARN-6 and R-101B/ARN-6		
C-1160	AAF # 3DA10-364	CAPACITOR, Fixed: mica, 10,000 mmf ±5%. Same as C-101.	Modulator voltage phasing network (in Y-101). Used with R-101/ARN-6		
	or AAF # 3K351-0322 ASO # R16-C -10492-51	CAPACITOR, Fixed: mica; 10,000 mmf ±5%. Same as C-119.	Modulator voltage phasing network (in Y-101). Used with R-101A/ARN-6 and R-101B/ARN-6		
C-1161	AAF # 3DA10-364	CAPACITOR, Fixed: paper dielectric; 10,000 mmf. Same as	Modulator voltage phasing network (in Y-101). Used with R-101/ARN-6		
	or AAF # 3K3510322 ASO # R16-C-10492-51	CAPACITOR, Fixed: mica; 10,000 mmf ±5%. Same as C-119.	Modulator voltage phasing network (in Y-101). Used with R-101A/ARN-6 and R-101B/ARN-6		
C-1162	AAF # 3DA150-23 ASO # R16-C -11336-150	CAPACITOR, Fixed: paper dielectirc; 150,000 mmf; ±20%, 120 vdcw; bakelite case 1-15/32" lg x 49/64" wd x 13/32" thk; axial wire leads.	Noise filter system for Y-101. Used with R-101A/ARN-6 and R-101B/ARN-6	Micamold 345YL119	Fairchild B424-767, Bendix Part No. C220082-8 and Magnavox 257817-8
C-1163	AAF # 3DA250-439 ASO # R16-C -11338-17-20	CAPACITOR, Fixed: paper dielectric; 250,000 mmf. Same as C-117.	Noise filter system for Y-101. Used with R-101/ARN-6, R-101A/ARN-6 and R-101B/ARN-6		

C-1164	AAF # 3DA50-341 ASO # R16-C-11292	CAPACITOR, Fixed: paper dielectric; 50,000 mmf. Same as C-1145.	Plate capacitor, V-115. Used with R-101/ARN-6, R-101A/ARN-6 and R-101B/ARN-6		
C-1165	AAF # 3DA50-341 ASO # R16-C-11292	CAPACITOR, Fixed: paper dielectric; 50,000 mmf. Same as C-1145.	Plate capacitor, V-116. Used with R-101/ARN-6, R-101A/ARN-6 and R-101B/ARN-6		
C-1166	AAF # 3D9500-42 ASO # R16-C-10017-58	CAPACITOR, Fixed: mica dielectric; 500 mmf ±10%; 500 vdcw; temp coef letter C; case size 20 per JAN-C-5, 51/64" x 15/32" x 7/32" max; 2 axial wire leads.	Grid filter, V-116. Used with R-101/ARN-6, R-101A/ARN-6 and R-101B/ARN-6	Dubilier SWL Aerovox 1469 Electromotive CM20B501K	Fairchild F26-CM20C501K, Bendix C220076-22 and Magnavox 257818-6
C-1167	AAF # 3D9500-42 ASO # R16-C-10017-58	CAPACITOR, Fixed: mica dielectric 500 mmf ±10%. Same as C-1166.	Grid filter, V-115 Used with R-101/ARN-6, R-101A/ARN-6 and R-101B/ARN-6		
C-1168	AAF # 3DB2-120 ASO # R16-C -11712-231	CAPACITOR, Fixed: paper dielectric; 75 vdcw; hermetically sealed metal can; 2-7/8" lg x 1-13/16" wd x 1-1/16" h; oil impregnated and filled; two solder lugs located on end; no internal ground connections; two #6-32 tapped mtg holes on 2-5/16" mtg/c.	Vibrator buffer Y-102. Used with R-101/ARN-6, R-101A/ARN-6 and R-101B/ARN-6	Electrical Utilities Co. # 10963	Fairchild D424-98, Bendix L220079-1 and Magnavox 257813-1
C-1169	AAF # 3DA50-341 ASO # R16-C-11292	CAPACITOR, Fixed: paper dielectric; 50,000 mmf. Same as C-1145.	Noise filter system for Y-101. Used with R-101/ARN-6, R-101A/ARN-6 and R-101B/ARN-6		
C-1170	AAF # 3DA100-908 ASO # R16-C-11299-26	CAPACITOR, Fixed: paper dielectric; 100,000 mmf. Same as C-129.	Noise filter system for Y-101. Used with R-101/ARN-6, R-101A/ARN-6 and R-101B/ARN-6		
C-1171	AAF # 3DA50-341 ASO # R16-C-11292	CAPACITOR, Fixed: paper dielectric; 50,000 mmf. Same as C-1145.	Noise filter system for Y-101. Used with R-101/ARN-6, R-101A/ARN-6 and R-101B/ARN-6		
C-1172	AAF # 3DB300-3 ASO # R16-C-9697-500	CAPACITOR, Fixed: electrolytic; 300 mmf ±150% −10% at 25°C; 35 vdcw; working temp range −40° to +85°C; 3-3/4" lg x 1-3/8" diam; round metal case; terminals are large pins of standard four pin tube base; pin #1 neg, pin #4 pos.	Vibrator noise filter input to Y-102. Used with R-101/ARN-6, R-101A/ARN-6 and R-101B/ARN-6	Micamold S-5227-E	Fairchild C424-97, Bendix C220078 and Magnavox 257801-1

TABLE OF REPLACEABLE PARTS (Continued)

MODEL: Radio Compass AN/ARN-6 **MAJOR ASSEMBLY: Radio Compass Unit R-101/ARN-6, R-101A/ARN-6 and R-101B/ARN-6**

Reference Symbol	*Army Stock Number Navy Type Number British Ref. Number*	*Name of Part and Description*	*Function*	*Mfr. and Designation or JAN Type*	*Drawing Or Spec. No.*
C-1173	AAF # 3DA250-439 ASO # R16-C -11338-17-20	CAPACITOR, Fixed: paper dielectric; 250,000 mmf. Same as C-117.	Bypass, cathodes V-115, V-116. Used with R-101/ARN-6, R-101A/ARN-6 and R-101B/ARN-6		
C-1174	AAF # 3D9010-3	CAPACITOR, Fixed: mica dielectric; 10 mmf. Same as C-127.	RF bridge, L-117. Used with R-101/ARN-6		
	or AAF3 # D9010-92 ASO # R16-C-7862-2	CAPACITOR, Fixed: ceramic; 10 mmf ±1%. Same as C-127.	RF bridge, L-117. Used with R-101A/ARN-6 and R-101B/ARN-6		
C-1175	AAF # 3D9015-5	CAPACITOR, Fixed: mica dielectric; 15 mmf. Same as C-132.	RF bridge, L-118. Used with R-101/ARN-6		
	or AAF # 5D9015-61 ASO # R16-C-7864-115	CAPACITOR, Fixed: ceramic; 15 mmf ±5%. Same as C-132.	RF bridge, L-118. Used with R-101A/ARN-6 and R-101B/ARN-6		
C-1176	AAF # 3D9010-3	CAPACITOR, Fixed: mica dielectric; 10 mmf. Same as C-127.	RF bridge, L-119. Used with R-101/ARN-6		
	or AAF # 3D9010-92 ASO # R16-C-7862-2	CAPACITOR, Fixed: ceramic; 10 mmf ±1%. Same as C-127.	RF bridge, L-119. Used with R-101A/ARN-6 and R-101B/ARN-6		
C-1177	AAF # 3D9010-3	CAPACITOR, Fixed: mica dielectric; 10 mmf. Same as C-127.	Part of tuning for secondaries of L-117, L-119. Used with R-101/ARN-6		
	or AAF # 3D9010-92 ASO # R16-C-7862-2	CAPACITOR, Fixed: ceramic; 10 mmf ±1%. Same as C-127.	Part of tuning for secondaries of L-117, L-119. Used with R-101A/ARN-6 and R-101B/ARN-6		
C-1178	AAF # 3DA1-118 ASO # R16-C -11189-250	CAPACITOR, Fixed: paper dielectric; 1,000 mmf. Same as C-168.	High frequency bypass, across secondary of T-105A, for anti-howl. Used with R-101/ARN-6, R-101A/ARN-6 and R-101B/ARN-6		

C-1179	AAF # 3DA250-439 ASO # R16-C -11338-17-20	CAPACITOR, Fixed: paper dielectric; 250,000 mmf. Same as C-117.	Bypass, V-101 plate and screen, and V-102 cathode bias supply. Used with R-101/ARN-6, R-101A/ARN-6 and R-101B/ARN-6		
C-1180	AAF # 3DA3-93 ASO # R16-C -11210-200	CAPACITOR, Fixed: paper dielectric; equal to JAN-CN20E-302M, except has 3-dot color code; 3,000 mmf −20%; 200 vdcw; molded yellow mica-filled phenolic case; case not over 51/64" lg x 15/32" wd x 7/32" thk; 2 axial wire leads.	Audio correction T-105A. Used with R-101/ARN-6, R-101A/ARN-6 and R-101B/ARN-6	Micamold # 338YL103	Fairchild B424-770, Bendix C220082-10 and Magnavox 257817-10
C-1181	AAF # 3K3510321 ASO # R16-C-10493-21	CAPACITOR, Fixed: mica; 10,000 mmf ±10%; 300 vdcw.	CW osc filter. Used with R-101A/ARN-6 and R-101B/ARN-6	JAN type CM35B103K	JAN-C-5 Magnavox 257830-1278
C-1182		Not used.			
C-1183		Not used.			
C-1184		Not used.			
C-1185		Not used.			
C-1186		Not used.			
C-1187		Not used.			
C-1188		Not used.			
C-1189	AAF # 3DA50-341 ASO # R16-C-11292	CAPACITOR, Fixed: paper dielectric; 50,000 mmf ±10%. Same as C-1145.	Audio filter. Used with R-101A/ARN-6 and R-101B/ARN-6		
C-1190	AAF # 3DA10-405 ASO # R16-C -11697-490	CAPACITOR, Fixed: paper dielectric; 10,000 mmf ±10%. Same as C-101.	L138 bypass. Used with R-101A/ARN-6 and R-101B/ARN-6		
C-1191	AAF # 3DA250-439 ASO # R16-C -11338-17-20	CAPACITOR, Fixed: paper dielectric; 250,000 mmf ±10%. Same as C-117.	Heater bypass. Used with R-101A/ARN-6 and R-101B/ARN-6		
C-1192	AAF # 3DA6-105 ASO # R16-C-11238-40	CAPACITOR, Fixed: paper dielectric; 6,000 mmf ±20%; 120 vdcw; 51/64" lg x 15/32" wd x 7/32" thk; axial wire leads.	Vibrator buffer. Used with R-101A/ARN-6 and R-101B/ARN-6	Micamold # 338-YL106	Bendix C220082-3, Fairchild B424-762 and Magnavox 257817-3
C-1193	AAF # 3DA6-105 ASO # R16-C-11238-40	CAPACITOR, Fixed: paper dielectric; 6,000 mmf ±20%. Same as C-1192.	Vibrator buffer. Used with R-101A/ARN-6 and R-101B/ARN-6		

TABLE OF REPLACEABLE PARTS (Continued)

MODEL: Radio Compass AN/ARN-6 **MAJOR ASSEMBLY: Radio Compass Unit R-101/ARN-6, R-101A/ARN-6 and R-101B/ARN-6**

Reference Symbol	*Army Stock Number Navy Type Number British Ref. Number*	*Name of Part and Description*	*Function*	*Mfr. and Designation or JAN Type*	*Drawing Or Spec. No.*
C-1194	AAF#3DA250-439 ASO#R16-C -11338-17-20	CAPACITOR, Fixed: paper dielectric; 250,000 mmf ±10%. Same as C-117.	Autosyn bypass. Used with R-101A/ARN-6 and R-101B/ARN-6		
C-2100		CAPACITOR, Fixed: ceramic; 30 mmf ±5%; 500 vdcw; temp coef −220 ±60 mmf C°.	Part of secondary tuning L-111. Used with R-101B/ARN-6	JAN type CC21RH300J	Magnavox 250088-123
C-2101		CAPACITOR, Fixed: ceramic; 30 mmf ±5%; 500 vdcw: temp coef −80 ±60 C°.	Part of secondary tuning L-110. Used with R-101B/ARN-6	JAN type CC26LH300J	Magnavox 250088-127
C-2102		CAPACITOR, Fixed: ceramic; 20 mmf ±5%; 500 vdcw; temp coef −30 ±60C°.	Part of secondary tuning L-112. Used with R-101B/ARN-6	JAN type CC21HH200J	Magnavox 250088-126
C-2103		CAPACITOR, Fixed: ceramic; 22 mmf ±5%; 500 vdcw; temp coef −330 ±60C°.	Part of secondary tuning L-116. Used with R-101B/ARN-6	JAN type CC21SH220J	Magnavox 250088-122
C-2104		Not used.			
C-2105		CAPACITOR, Fixed: ceramic; 27 mmf ±5%; 500 vdcw; temp coef 0 ±50C°.	Part of secondary tuning L-117. Used with R-101B/ARN-6	JAN type CC26CH270J	Magnavox 250088-128
C-2106		CAPACITOR, Fixed: ceramic; 27 mmf ±5%; 500 vdcw. Same as C-2105.	Part of secondary tuning L-119. Used with R-101B/ARN-6		
C-2107		CAPACITOR, Fixed: ceramic; 30 mmf ±5%; 500 vdcw; temp coef −330 ±60C°.	Part of secondary tuning L-120. Used with R-101B/ARN-6	JAN type CC21SH300J	Magnavox 250088-121
C-2108		CAPACITOR, Fixed: ceramic; 22 mmf ±5%; 500 vdcw. Same as C-2103.	Part of secondary tuning L-121 and L-122. Used with R-101B/ARN-6		
C-2109		Not used.			
C-2110		CAPACITOR, Fixed: ceramic; 27 mmf ±5%; 500 vdcw. Same as C-2105.	Part of secondary tuning L-123. Used with R-101B/ARN-6		

C-2111		CAPACITOR, Fixed: ceramic; 30 mmf ±5%; 500 vdcw. Same as C-2107.	Part of secondary tuning L-124. Used with R-101B/ARN-6		
C-2112		CAPACITOR, Fixed: ceramic; 22 mmf ±5%; 500 vdcw. Same as C-2103.	Part of secondary tuning L-125 and L-126. Used with R-101B/ARN-6		
C-2113		Not used.			
C-2114		CAPACITOR: Fixed: ceramic; 27 mmf ±5%; 500 vdcw. Same as C-2105.	Part of secondary tuning L-127. Used with R-101B/ARN-6		
E-101	AAF # 2Z9406.239	BOARD, Terminal: 6 solder lug lead-through terminals and eyelets; steel, hot tin dip; 1-5/16" sq x .020" thk, with terms 23/32" lg overall; terminals attached with fused glass-bead insul; also plate has two 3/16" unused holes; 4 mtg holes # 51 drill in corners, on 1-5/16" circle.	Terminal board for T-101, T-102, T-103, and T-104. Used with R-101/ARN-6, R-101A/ARN-6 and R-101B/ARN-6	Bendix Part No. A203044-1	Fairchild B424-V6, Bendix A203044-1 and Magnavox 207853-1
E-102	AAF # 2Z7091.154	BOARD, terminal; no terminals or mounted parts; phenolic; 1-13/16" lg x 1" wd x 3/32" thk; six mounting holes tapped # 4-40 thd, four on 1-1/2" x 7/16" centers, and 2 symmetrically arranged within this rectangle 1-5/32" center to center. Three 1/4" diam holes, and one 1/8" diam hole, some holes ctb.	Used in T-104 and Z-101. Used with R-101/ARN-6, R-101A/ARN-6 and R-101B/ARN-6	Bendix Part No. C228075	Fairchild B424-416, Bendix C228075 and Magnavox 207883-2
E-103	AAF # 2Z9405.143 ASO # R16-B-6549-200	BOARD, Terminal: 5 tin dipped brass soldering posts; phenolic; 3-1/8" thk lg x 1-29/32" wd x 1/8" thk; with clearance cut in edges and one 3/8" dia hole in center; 6 mtg holes, 1/8" diam, ctb, 4 on 2-3/4" x 15/16" ctrs.	Internal terminal and mounting strip for IF trap Z-101. Used with R-101/ARN-6, R-101A/ARN-6 and R-101B/ARN-6	Bendix Part No. A203035-1	Fairchild B424-V4, Bendix A203035-1 and Magnavox 207851-2
E-104	AAF # 2Z9401.121 ASO # R16-B-6540-610	Board, Terminal: one tin dipped brass soldering post; phenolic; 1-13/16" lg x 1" wd x 3/32" thk; six mtg holes tapped # 4-40 thd; 4 on 1-1/2" x 7/16" centers, and 2 symmetrically arranged within this rectangle 1-5/32" c to c; also 3 holes 1/4", 2 holes ctb.	Terminal post and trimmer cap mtg, for T-101, T-102, and T-103. Used with R-101/ARN-6, R-101A/ARN-6 and R-101B/ARN-6	Bendix Part No. A203020-1	Fairchild B424-W5, Bendix A203020-1 and Magnavox 207846-2
E-105	AAF # 2Z9411.43 ASO # R16-B-6549-640	BOARD, Terminal: 11 tin dipped brass soldering posts; phenolic; 3-1/18" lg x 1-29/32" wd x 1/8" thk; one 3/8" diam hole in center and clearances in edges; 4 mtg holes 1/8" diam ctb.	Internal mounting and terminal board for 1st and 2nd stage IF transformers, T-101 and T-102. Used with R-101/ARN-6, R-101A/ARN-6 and R-101B/ARN-6	Bendix Part No. A203022-1	Fairchild B424-W6, Bendix A203022-1 and Magnavox 207848-1

TABLE OF REPLACEABLE PARTS (Continued)

MODEL: Radio Compass AN/ARN-6 **MAJOR ASSEMBLY: Radio Compass Unit R-101/ARN-6, R-101A/ARN-6 and R-101B/ARN-6**

Reference Symbol	*Army Stock Number Navy Type Number British Ref. Number*	*Name of Part and Description*	*Function*	*Mfr. and Designation or JAN Type*	*Drawing Or Spec. No.*
E-106	AAF # 2Z9409.62 ASO # R16-B-6549-655	BOARD, Terminal: 10 tin dipped brass soldering posts; phenolic 3-1/8" lg x 1-29/32" wd x 1/8" thk; one 3/8" diam hole in center and clearances in edges; 4 mtg holes 1/8" diam ctb.	Internal mounting and terminal board for BFO transformer T-104. Used with R-101/ARN-6, R-101A/ARN-6 and R-101B/ARN-6	Bendix Part No. A203023-1	Fairchild B424-Z9, Bendix A203023-1 and Magnavox 207849-1
E-107	AAF # 2Z9405.142 ASO # R16-B-6549-440	BOARD, Terminal: 6 soldering lugs; phenolic; hexagonal: 1" wd x 1-3/16" lg x 1/16" thk; 1 mtg hole .209" diam in center.	Internal terminal board, for phase-shifter unit L-102. Used with R-101/ARN-6, R-101A/ARN-6 and R-101B/ARN-6	Bendix Part No. A203006-1	Fairchild B413-A66, Bendix A203006-1 and Magnavox 207845-1
E-108	AAF # 2Z9405.141 ASO # R16-B-6549-445	BOARD, Terminal: nine solder-lug terminals; phenolic; diamond shape 1-3/4" lg x 1-5/16" wd x 5/64" thk; 2 mtg holes, # 26 drill, at ends 1.414 between center; one clearance hole in center, # 10 drill.	Internal terminal board, for phase-shifter unit L-102. Used with R-101/ARN-6, R-101A/ARN-6 and R-101B/ARN-6	Bendix Part No. C203005-1	Fairchild B424-U5, Bendix C203005-1 and Magnavox 207844-1
E-109	AAF # 2Z9407.89	BOARD, Terminal: seven solder lug lead-through terminals and eyelets; steel, hot tin dip; 1-5/8" lg x 1-13/32" wd x 0.020" thk with terminals 3/4" lg overall; terminals attached with fused glass-bead insulation, also plate has one 3/16" open hole; 4 mtg holes # 50 drill on 1-3/8" x 29/32" centers.	Terminal board for antenna coil assembly L-103. Used with R-101/ARN-6, R-101A/ARN-6 and R-101B/ARN-6	Bendix Part No. C203002-3	Fairchild B424-P23 Bendix C203002-3 and Magnavox 207874-3
E-110	AAF # 2Z9406.249	BOARD, Terminal: six solder lug lead-through terminals and eyelets; steel, hot tin dip; 1.415" sq x 0.020" thk, with terminals 3/4" lg overall; terminals attached with fused glass-bead insulation; 2 mtg posts on diagonally opposite corners on 1" x 1" centers.	Terminal board for phase-shifting unit L-102. Used with R-101/ARN-6, R-101A/ARN-6 and R-101B/ARN-6	Bendix Part No. C203004-1	Fairchild B424-U7, Bendix C203004-1 and Magnavox 207843-1
E-111	AAF # 2Z9405.140	BOARD, Terminal: five solder lug lead-through terminals and eyelets; steel, hot tin dip; 1-5/8" lg x 1-13/32" wd x 0.020" thk with terminals 3/4" lg overall; terminals attached with fused glass-bead insulation, also plate has one 3/16" open hole; 4 mtg holes # 50 drill on 1-3/8" x 29/32" centers.	Terminal board for RF transformer assemblies L-104, L-105, L-106. Used with R-101/ARN-6, R-101A/ARN-6 and R-101B/ARN-6	Bendix Part No. C203002-2	Fairchild B424-R20, Bendix C203002-2 and Magnavox 207874-2

E-112	AAF # 2Z9412.191 ASO # R16-B-6549-616	BOARD, Terminal: 9 tin dipped brass terminals: 4-11/16" lg x 21/32" w x 3/16" thk overall; phenolic; two 1/8" diam holes, ctb, 4-1/4" c to c. 6 unused 1/8" diam holes.	Terminal board for band-switch drive mechanism. Used with R-101/ARN-6, R-101A/ARN-6 and R-101B/ARN-6	Bendix Part No. L202912-1	Fairchild B424-AA14, Bendix L202912-1 and Magnavox 207893-1
E-113	AAF # 2Z9416.87 ASO # R16-B-6552-54-7	BOARD, Terminal: 17 brass tin dipped soldering posts; phenolic, 4-1/8" lg x 1-1/2" wd x 5/64" thk; marked E-113; 2 aluminum mtg posts; 1/8" high x 1/4" diameter tapped # 4-40, spaced 3-3/8" on centerline; 5 unused 1/8" diam holes.	Mounting strip for resistors and capacitors associated with Audio Driver circuit. Used with R-101/ARN-6, R-101A/ARN-6 and R-101B/ARN-6	Bendix Part No. C203016-1	Fairchild C424-A30, Bendix C203016-1 and Magnavox 207881-1
E-114	AAF # 2Z9401.120 ASO # R16-B-6540-615	BOARD, Terminal: one tin dipped brass soldering post; phenolic; 5-1/4" lg x 1-15/32" wd x 3/32" thk, with clearance cuts in outline; three aluminum mounting posts 7/16" high x 3/16" diam, tapped with # 4-40 thd, spaced about 2-7/16" apart.	Trimmer cap-mtg board for RF components L-101, L-103, L-104, L-105, and L-106. Used with R-101/ARN-6 and R-101A/ARN-6	Bendix Part No. C203003-1	Fairchild B424-N14 and Bendix C203003-1
	or	BOARD, Terminal: phenolic; 2-7/8" lg x 1-15/32" wd x 0.093" thk, with clearance cuts in outline; four aluminum mounting posts 0.437" h x 0.116 diam, tapped with # 4-40 thd, spaced 0.597" apart.	Trimmer cap-mtg board for RF components L-101, L-103, L-104, L-105 and L-106. Used with R-101B/ARN-6	Magnavox Part 208174	Magnavox 208174
E-115	AAF # 2Z9404.259	BOARD, Terminal: four solder lug lead-through terminals and eyelets; steel, hot tin dip; 1-5/8" lg x 1-13/32" wd x .020" thk, with terminals 3/4" overall; terminals attached with fused glass-bead insulation, also plate has one 3/16" open hole; 4 mounting holes # 50 drill on 1-3/8" x 29/32" centers.	Terminal board for loop input transformer L-101. Used with R-101/ARN-6, R-101A/ARN-6 and R-101B/ARN-6	Bendix Part No. C203002-1	Fairchild B424-N28, Bendix C203002-1 and Magnavox 207874-1
E-116	AAF # 2Z9440.171	BOARD, Terminal: 48 tin dipped brass soldering posts; phenolic; 6-1/4" lg x 2-1/4" wd x 5/64" thk with one corner cut off; marked E-116; 2 angle-mtg brackets at end and side, end bracket has two holes tapped # 4-40, 1" c to c, side bracket has one hole # 20 drill; 13/64" hole on end opposite clipped corner; one or more unused holes.	Mounting for certain capacitors and resistors principally those in AVC, and beat frequency and tone oscillators. Used with R-101/ARN-6, R-101A/ARN-6 and R-101B/ARN-6	Bendix Part No. C203017-1	Fairchild C424-A28, Bendix C203017-1 and Magnavox 207882-1
E-117	AAF # 2Z9418.64 ASO # R16-B-6552-15	BOARD, Terminal: 19 tin-dipped brass soldering posts; phenolic; 3-3/4" lg x 2" wd x 5/64" thk, marked E-117; 2 aluminum mtg posts 1/8" high x 1/4" diam tapped # 4-40, spaced 2-5/8" on centerline. One unused 1/8" diam hole.	Mounting for certain capacitors and resistors, for plate and screen supply filters, IF and 1st detector. Used with R-101/ARN-6, R-101A/ARN-6 and R-101B/ARN-6	Bendix Part No. C203014-1	Fairchild C424-A26, Bendix C203014-1 and Magnavox 207879-1

TABLE OF REPLACEABLE PARTS (Continued)

MODEL: Radio Compass AN/ARN-6 **MAJOR ASSEMBLY: Radio Compass Unit R-101/ARN-6, R-101A/ARN-6 and R-101B/ARN-6**

Reference Symbol	*Army Stock Number Navy Type Number British Ref. Number*	*Name of Part and Description*	*Function*	*Mfr. and Designation or JAN Type*	*Drawing Or Spec. No.*
E-118	AAF # 2Z9408.201 ASO # R16-B-6549-615	BOARD, Terminal: 8 tin dipped brass soldering posts; phenolic, 2-13/16" lg x 2" wd x 5/64" thk; marked E-118; 2 mtg posts, tapped # 4-40, spaced 2-1/8".	For mounting of L-136, L-137; C-1164, C-1165; R-190, R-191. Used with R-101/ARN-6, R-101A/ARN-6 and R-101B/ARN-6	Bendix Part No. L202998-1	Fairchild B424-M39, Bendix L202998-1 and Magnavox 207896-1
E-119	AAF # 2Z9417.16 ASO # R16-B-6551-425	BOARD, Terminal: 17 tin-dipped brass soldering posts; phenolic; 3-31/32" lg x 2-1/8" wd x 5/64" thk; marked E-119: 2 mtg posts, tapped # 4-40, spaced 3-5/8".	For mounting of L-135; C-1159, C-1160, C-1161, C-1169, C-1170, C-1171; R-185, R-186, R-187, R-188, R-189. Used with R-101/ARN-6, R-101A/ARN-6 and R-101B/ARN-6	Bendix Part No. L202993-1	Fairchild B424-M32, Bendix L202993-1 and Magnavox 207894-1
E-120	AAF # 2Z9404.292 ASO # R16-B-6547-247	BOARD, Terminal: 5 tin-dipped brass soldering posts, and 2 right-angle brackets; phenolic, 2-19/32" lg x 2-1/8" wd x 5/64" thk; marked E-120; 2 mtg posts, tapped # 4-40; spaced 1-1/14".	For mounting of L-133, L-134; C-1162, C-1163. Used with R-101/ARN-6, R-101A/ARN-6 and R-101B/ARN-6	Bendix Part No. L202994-1	Fairchild B424-M28, Bendix L202994-1 and Magnavox 207895-1
E-121	AAF # 2Z9425-6 ASO # R16-B-6552-37	BOARD, Terminal: 25 tin-dipped brass soldering posts; phenolic; 4-1/8" lg x 2" wd x 5/64" thk; marked E-121; 2 aluminum mtg posts, 1/8" high x 1/4" diam tapped # 4-40, spaced 2-1/4" on centerline.	Mounting strip for certain resistors and capacitors associated with RF circuits. Used with R-101/ARN-6, R-101A/ARN-6 and R-101B/ARN-6	Bendix Part No. C203013-1	Fairchild C424-A24, Bendix C203013-1 and Magnavox 207878-1
E-122	AAF # 2Z1409-85	BUSHING, Spacer: phenolic; 0.359" lg; 0.128" ID; 1/4" OD.	Band-switch wafer spacing. Used with R-101/ARN-6, R-101A/ARN-6 and R-101B/ARN-6	Bendix Part No. OA18023-89	Fairchild B424-16, Bendix OA18023-89 and Magnavox 102055-37
E-123	AAF # 3G1837-7.8	BUSHING, Spacer: phenolic; 0.128" lg; 0.218" ID; 1/4" OD.	Band-switch wafer spacing. Used with R-101/ARN-6, R-101A/ARN-6 and R-101B/ARN-6	Bendix Part No. OA18023-88	Fairchild B424-17, Bendix OA18023-88 and Magnavox 102055-38

E-124	AAF # 3G1837-25.1	BUSHING, Spacer: phenolic; 0.781" lg; 0.128" ID; 1/4" OD.	Band-switch wafer spacing. Used with R-101/ARN-6, R-101A/ARN-6 and R-101B/ARN-6	Bendix Part No. OA18023-90	Fairchild B424-15, Bendix OA18023-90 and Magnavox 102055-38
E-125	AAF # 3G1838-4.8	INSULATOR, Washer: phenolic; 0.128" ID; 1/4" OD; 0.050" thk.	Spacing washer for wafer switch used in all RF and IF cans, and in band-switch drive mechanism. Used with R-101/ARN-6, R-101A/ARN-6 and R-101B/ARN-6	Bendix Part No. OA18023-87	Fairchild B424-41, Bendix OA18023-87 and Magnavox 102055-35
E-126	AAF # 3G1838-4.9	INSULATOR, Washer: phenolic; 0.128" ID; 1/4" OD; 3/32" thk.	Wafer-switch spacer used in IF trap, IF and BFO cans. Used with R-101A/ARN-6 and R-101B/ARN-6	Bendix Part No. OA18023-92	Bendix OA18023-92 and Magnavox 102055-40
E-127	AAF # 2Z9403.219 ASO # R16-B-6541-550	BOARD, Terminal: 3 tin-dipped brass soldering posts; phenolic; shape approx circular quadrant, with 0.173" mtg hole as center, principal radius is 33/64" and short radius at angle is 3/16", thickness is 5/64".	Tie points for C-1156, C-1157, C-1158. Used with R-101/ARN-6, R-101A/ARN-6 and R-101B/ARN-6	Bendix Part No. C202924-1	Fairchild B424M-44 Bendix C202924-1 and Magnavox 207823-1
E-128	AAF # 2Z9402.372	BOARD, Terminal: 2 tin-dipped brass soldering posts; phenolic; 7/8" sq x 5/64" thk; 2 holes for leads, 3/32", near posts; central mtg hole # 26 dr; stamped L-133.	Terminal board for L-133. Used with R-101/ARN-6, R-101A/ARN-6 and R-101B/ARN-6	Bendix Part No. L202851-1	Fairchild B424-M22, Bendix L202851-1 and Magnavox 207892-1
E-129	AAF # 2Z9402.372	BOARD, Terminal: Same as E-128 except stamped L-134.	Terminal board for L-134. Used with R-101/ARN-6, R-101A/ARN-6 and R-101B/ARN-6	Bendix Part No. L202851-2	Fairchild B424-M45, Bendix L202851-2 and Magnavox 207892-2
E-130	AAF # 2Z9402.372	BOARD, Terminal: Same as E-128 except stamped L-135.	Terminal board for L-135. Used with R-101/ARN-6, R-101A/ARN-6 and R-101B/ARN-6	Bendix Part No. L202951-3	Fairchild B424-M46, Bendix L202851-3 and Magnavox 207892-3

TABLE OF REPLACEABLE PARTS (Continued)

MODEL: Radio Compass AN/ARN-6 **MAJOR ASSEMBLY: Radio Compass Unit R-101/ARN-6, R-101A/ARN-6 and R-101B/ARN-6**

Reference Symbol	*Army Stock Number Navy Type Number British Ref. Number*	*Name of Part and Description*	*Function*	*Mfr. and Designation or JAN Type*	*Drawing Or Spec. No.*
E-131	AAF # 2Z9407-98 ASO # R16-B-6549-498	BOARD, Terminal: 7 tin-dipped brass soldering posts; phenolic; 2-1/2" lg x 1" wd x 5/64" thk; 2 mtg posts tapped #4-40, spaced 1-3/8" along centerline; stamped E-131; 2 unused holes.	For mounting C-131, C-140; R-1100, R-1102, R-1106. Used with R-101/ARN-6, R-101A/ARN-6 and R-101B/ARN-6	Bendix Part No. C203015-1	Fairchild C-424-A38, Bendix C203015-1 and Magnavox 207880-1
E-132	AAF # 2Z7093-109	BOARD, Terminal: 3 solder lug lead-through terminals and eyelets; steel, hot tin dip; 1-5/16" sq x .020" thk, with terms. 23/32" lg overall; terminals attached with fused glass-bead insulation; also plate has two 3/16" unused holes; 4 mtg holes #51 drill in corners, on 1-5/16" circle.	Terminal board for Z-101. Used with R-101/ARN-6, R-101A/ARN-6 and R-101B/ARN-6	Bendix Part No. A203043-1	Fairchild B-424-V7, Bendix A203043-1 and Magnavox 207852-1
E-133	AAF # 2Z9409.69 ASO # R16-B-6549-628	BOARD, Terminal: 9 tin-dipped brass soldering posts; phenolic; 3-1/8" lg x 1-29/32" wd x 1/8" thk; one 3/8" diam hole in center and clearances in edges; 6 mtg holes 1/8" diam ctb, 4 on 2-3/4" x 15/16" ctrs, and 2 spaced 1-9/16" along centerline; 2 unused holes.	Internal mounting and terminal board for 3rd stage IF transformer T-103. Used with R-101/ARN-6, R-101A/ARN-6 and R-101B/ARN-6	Bendix Part A203021-1	Fairchild B424-Y5, Bendix A203021-1 and Magnavox 207847-1
E-134	AAF # 2Z9410.30 ASO # R16-B-6550-620	BOARD, Terminal: 13 tin-dipped brass soldering posts; phenolic; 5-5/8" lg x 1/2" wd x 3/16" thk; 2 mtg posts drilled 5/32" clearance, spaced 5-11/64".	For external connections, Y-101. Used with R-101/ARN-6, R-101A/ARN-6 and R-101B/ARN-6	Bendix Part No. C202929-1	Fairchild B424-M27, Bendix C202929-1 and Magnavox 207873-1
E-135	AAF # 2Z9402.372 ASO # R16-B-6540-629	BOARD, Terminal: same as E-128, except stamped L-137.	For L-137. Used with R-101/ARN-6, R-101A/ARN-6 and R-101B/ARN-6	Bendix Part No. L202851-5	Fairchild B424-M48, Bendix L202851-5 and Magnavox 207892-5
E-136	AAF # 2Z9402.372	BOARD, Terminal: same as E-128, except stamped L-136.	For L-136. Used with R-101/ARN-6, R-101A/ARN-6 and R-101B/ARN-6	Bendix Part No. L202851-4	Fairchild B424-M47, Bendix L202851-4 and Magnavox 207892-4
H-101	AAF # 6L31239 or	BOLT, Stud: brass nickel plated; 3-7/16" lg x 0.116" diam; #6-32 thd at each end, 7/16" lg.	Used in L-102 coil assembly. Used with R-101/ARN-6		Fairchild B424-414

		BOLT, Stud: brass, cadmium plate; 3-3/8" lg x 3/16" diam; #6-32 thd 7/32" one end, 17/32" lg other end.	Used in L-102 coil assembly. Used with R-101/ARN-6, R-101A/ARN-6 and R-101B/ARN-6	Bendix Part No. A241598	Bendix A241598 and Magnavox 117927-1
H-102	AAF#6L20905-19.10AL	SCREW, Machine: spcl flat fil hd; having under surface chamfered; aluminum; #5-40; 1-3/16" lg under head, threaded 3/8"; head is 1/4" diam x 1/4" lg; head has #4-40 hole tapped 5/32" deep axially.	For wafer-switch stacks in RF Coil assemblies (input, interstage, and BFO). Used with R-101/ARN-6		Fairchild B424-27
	or AAF#6L20805-19.4 ASO#R16-S-2209-45	SCREW, Machine: spcl flat fil hd; brass, nickel pl; under surface cham; #5-40; 1-3/16" lg under head; thd 3/8"; 1/4" diam head x 1/4" lg; head has #4-40 hole tapped 5/16" deep axially.	For wafer-switch stacks in RF Coil assemblies (input, interstage, and BFO). Used with R-101A/ARN-6 and R-101B/ARN-6	Bendix Part No. A241585	Bendix A241585 and Magnavox 117923-2
H-103	AAF#2Z2639-82 ASO#R16-C-241136	CLAMP, Carbon steel, solder dip, 1-5/8" diam x 17/32" overall; two #26 drill mtg holes; 1-1/2" c to c; 1-7/16" unsprung inside clamp diam for friction fit on outside of vibrator unit.	Friction clamp, to ground the shell of vibrator unit. Used with R-101/ARN-6, R-101A/ARN-6 and R-101B/ARN-6	Bendix Part No. C241136	Fairchild B424-513 Bendix C241136, and Magnavox 107930-1
H-104	AAF#6L6540-12.8SF	SCREW, Machine: bind hd; st steel, passivated; #5-40; 11/16" lg thd; head .256" diam, .068 thk.	Wafer-switch mtg for band-switch drive. Used with R-101/ARN-6		Fairchild B424-352
	or ASO#R43-B XR-HN950B32-540	SCREW, Machine: brass, nickel plate; binder hd; #5-40; 1" lg; threaded portion 11/16" lg; head 0.256" diam x .068" thk.	Wafer-switch mtg for band-switch drive. Used with R-101A/ARN-6 and R-101B/ARN-6	JAN HN950B32-540	Bendix HN950B22-540 and Magnavox 105125-212
H-105	AAF#6L6832-7.81P	SCREW, Machine: hex hd; steel, parkerized, dyed black; #8-32; 7/16" lg overall; 5/16" lg thd; head 5/16" across flats, 1/8" thk.	For attaching band-switch drive mechanism to receiver chassis. Used with R-101/ARN-6, R-101A/ARN-6 and R-101B/ARN-6	Bendix Part No. A241593	Fairchild B424-130 Bendix A241593 and Magnavox 107935-2
H-106	AAF#6L50132-1	WASHER, Flat: stainless steel; 0.133" ID; 9/32" OD x 0.025 thk.	Used in mounting band-switch wafers. Used with R-101A/ARN-6 and R-101B/ARN-6	Bendix Part No. OA17030-3	Bendix OA17030-3 and Magnavox 101831-17N
H-107	AAF#3G1790-3.7	WASHER, Flat: black neoprene; 0.116" ID; 0.187" OD; 1/32" thk.	Cushioning under screw heads which attach trimmer capacitors in RF coil units. Used with R-101/ARN-6, R-101A/ARN-6 and R-101B/ARN-6	Bendix Part No. OA107770-37	Fairchild B424-528, Bendix OA107770-37 and Magnavox 101921-39

TABLE OF REPLACEABLE PARTS (Continued)

MODEL: Radio Compass AN/ARN-6 **MAJOR ASSEMBLY: Radio Compass Unit R-101/ARN-6, R-101A/ARN-6 and R-101B/ARN-6**

Reference Symbol	*Army Stock Number Navy Type Number British Ref. Number*	*Name of Part and Description*	*Function*	*Mfr. and Designation or JAN Type*	*Drawing Or Spec. No.*
H-108	AAF # 6L73612-5	WASHER, Spring: phosphor bronze; 0.128" ID; 5/16" OD; 1/64" thk.	Friction under band-switch drive shaft access port covers, on outer case of receiver. Used with R-101/ARN-6, R-101A/ARN-6 and R-101B/ARN-6	Bendix Part No. OA17027-38	Fairchild B413-452, Bendix OA17027-63 and Magnavox 101841-27N
H-109	AAF # 6L73612-6	WASHER, Spring: phosphor bronze; 0.161" ID; 3/8" OD; 0.011" thk.	Used under link joining shaft cranks in band-switch mechanism. Used with R-101/ARN-6, R-101A/ARN-6 and R-101B/ARN-6	Bendix Part No. OA17027-27	Fairchild B424-506, Bendix OA17027-27 and Magnavox 101841-26N
H-110		(Reference number not assigned.)			
H-111	AAF # 6L3701-82	NUT, lock: Phosphor bronze; # 8-32; formed from 0.010" stock; 1/2" OD; nut is of type which can be pushed on over thread, and it has projecting ears to act as its own lock washer.	For iron core tuning adjustment in RF coils L-109 to L-112, L-116 to L-131. Used with R-101/ARN-6, R-101A/ARN-6 and R-101B/ARN-6	Tinnerman X-1020	Fairchild B413-163, Bendix A241597 and Magnavox 107934-1
H-112	AAF # 6L72905-3	WASHER, Lock: split type: stainless steel; 0.127" ID, 7/32" OD, 1/32" thk. (Std split lock washer for # 5 screw except stainless steel.)	For mounting switch wafers. Used with R-101A/ARN-6 and R-101B/ARN-6	Bendix Part No. OA18037-34	Bendix OA18037-34 and Magnavox 107840-15N
H-113	AAF # 6L3605-40-3.1 ASO # R16-N-2158	NUT, Hexagon: steel, nickel plate; # 5-40; 3/16" across flats, 3/32" thk.	For mounting switch wafers. Used with R-101/ARN-6, R-101A/ARN-6 and R-101B/ARN-6	JAN HSN775B-3	Fairchild B413-333, Bendix HSN775B-3 and Magnavox 105120-53N
H-114	AAF # 2Z8202.21 ASO # R16-L-5340	LOCK, Shaft: brass, nickel pl; c/o spcl lock bushing and nut, 9/16" lg o/a; # 3/8-32 bushing 1/2" lg across flats w # 3/8-32 int tap 3/8" d; 1/4" diam axially hole completely through.	Used with R-101/ARN-6, R-101A/ARN-6 and R-101B/ARN-6	James Millen # 10061	Fairchild A554-77, Bendix C239625-1 and Magnavox 107907-1

J-101	AAF # 2Z8799-239 ASO # R16-R-2505	CONNECTOR, Female contact: Sig C socket SO-239, Navy 49194; single central female contact; straight type; overall length is 1-1/16", mounting flange is 1" sq; cylindrical cast body with square flange; molded insert; 4 mtg holes, # 31 dr, .718" sq centers.	Receives Cord CG-320/ARN-6 or CG-405/ARN-6 (sense antenna input). Used with R-101/ARN-6, R-101A/ARN-6 and R-101B/ARN-6	Ucinite 118044	Sig C Dwg # SC-D-5850, Bendix A107382 and Magnavox 187815-1
J-102		CONNECTOR, Female contact: (Single contact; components assembled on side of inverter unit.)	Receives connector of loop control signal input cable. Used with R-101/ARN-6, R-101A/ARN-6 and R-101B/ARN-6		Magnavox 207899-1
K-101	AAF # 2Z7598-97 ASO # R17-R-5957-20	RELAY, Rotary: special contact arrgmt; 3-1/8" lg x 2-1/16" wd x 2" h overall; Oak type 76; Coin silver rotor blades wiping in spring silver stator contact clips; coil tapped to function as operating or as holding coil, on 26.5v DC nominal, with 7 ohms operating and 225 ohms holding; coil is nylon thread wrapped and impreg with fungicidal baking varnish; four wafers; four mtg holes, # 26 dr, 2-13/16" x 1-11/16" ctrs.	"Loop" relay. Used with R-101/ARN-6, R-101A/ARN-6 and R-101B/ARN-6	Oak # 6839	Fairchild D424-101, Bendix L218229 and Magnavox 167811-1
K-102	AAF # 2Z7598-96 ASO # R17-R-5957	RELAY, Rotary: special contact arrangement; 2-17/32" lg x 1-1/2" wd x 1-11/16" overall; Oak type 76, coin silver rotor blades wiping in spring silver stator contact clips; coil tapped to form operating and holding portions, 26.5v DC nominal, with 7 ohms for operating and 225 ohms for holding; coil is wrapped with nylon thd and impr with fungicidal baking varnish; 2 wafers; 3 mounting holes, .150" diam, on 2-5/32" x 1-1/8" centers.	"Antenna" relay. Used with R-101/ARN-6, R-101A/ARN-6 and R/101B-ARN-6	Oak # 6838	Fairchild D424-100, Bendix L218228 and Magnavox 167810-1
L-101	AAF # 3C1084Z39-23 ASO # R16-R-2193-32	COIL ASSEMBLY, RF: in aluminum can; tuned RF transformer, 4 bands, with built-in band switch, bands are 100-200 kc, 200-410 kc, 410-850 kc, 850-1750 kc; aluminum can is 5-1/2" lg x 4" wd x 1-3/4" h overall; components include L-109, L-110, L-111, L-112, S-101, S-102, S-103, C-103, C-104, C-106, C-107, E-114, and E-115; can is stamped L-101 LOOP; two # 8-32 mtg inserts, 4-7/8" c to c on long edge; tuned by external variable capacitor.	Input, loop to loop amplifier. Used with R-101/ARN-6 and R-101A/ARN-6	Bendix Part No. N215391-1	Fairchild D424-N1 and Bendix N215391-1
	or	COIL ASSEMBLY, RF: in aluminum can; tuned RF xformer, 4 bands with built-in band switch, bands are 100-200 kc, 200-410 kc, 410-850 kc, 850-1750 kc; aluminum can is 5-1/2" lg x 5" wd x 1-3/4" h over-all; components include L-109, L-110, L-111, L-112; S-101, S-102, S-103; C-101, C-102, C-103, C-104, C-106, C-107, C-108, C-2100, C-2101, C-2102; R-101; E-114 and E-115; can is stamped L-101 LOOP; two # 8-32 mtg inserts, 4-7/8" c to c on long edge; tuned by external variable capacitor.	Input, loop to loop amplifier. Used with R-101B/ARN-6	Magnavox Part 367972	Bendix N216168 and Magnavox 367972

TABLE OF REPLACEABLE PARTS (Continued)

MODEL: Radio Compass AN/ARN-6 **MAJOR ASSEMBLY: Radio Compass Unit R-101/ARN-6, R-101A/ARN-6 and R-101B/ARN-6**

Reference Symbol	*Army Stock Number Navy Type Number British Ref. Number*	*Name of Part and Description*	*Function*	*Mfr. and Designation or JAN Type*	*Drawing Or Spec. No.*
L-102	AAF # 3C1084Z39-12 ASO # R16-R-2193-34	COIL, RF: phase shifter; 2 windings, universal wound, rectangular aluminum shield can; approx 1-7/16" sq x 4" lg; bakelite tubing coil form, powdered iron core in pri only; 2 mtg inserts in term board end, tapped # 6-32, on 1" x 1" centers at diagonally opposite corners; 6 solder lug terminals at one end numbered 1-6.	For phase-shifting of loop signal. Used with R-101/ARN-6, R-101A/ARN-6 and R-101B/ARN-6	Bendix Part No. L215359-1	Fairchild D424-U1, Bendix L215359-1 and Magnavox 367854-1
L-103	AAF # 3C4021-1 ASO # R16-R-2193-30	COIL ASSEMBLY, RF: in aluminum can; tuned RF transformer, 4 bands with built-in band switch; bands are 100-200 kc, 200-410 kc, 410-850 kc, 850-1750 kc, aluminum can is 5-1/2" lg x 4" wd x 1-3/4" h overall; components include L-116, L-117, L-118, L-119, S-104, S-105, S-106, S-107, C-123, C-125, C-126, C-130, E-109, and E-114; can is stamped L-103 ANTENNA: two # 8-32 mtg inserts 4-7/8" c to c on long edge; tuned by external variable capacitor.	Coupling, loop amplifier and nondirectional antenna into first RF stage. Used with R-101/ARN-6 and R-101A/ARN-6	Bendix Part No. N215389-1	Fairchild B424-P1 and Bendix N215389-1
	or	COIL ASSEMBLY, RF: in aluminum can; tuned RF xformer, 4 bands with built-in band switch; bands are 100-200 kc, 200-410 kc, 410-850 kc, 850-1750 kc, aluminum can is 5-1/2" lg x 4" wd x 1-3/4" h overall; components include L-116, L-117, L-118, L-119; S-104, S-105, S-106, S-107; C-123, C-125, C-126, C-128, C-129, C-130, C-132, C-133, C-1174, C-1175, C-1176, C-2103, C-2104, C-2105, C-2106; R-114, E-109 and E-114; can is stamped L-103 ANTENNA; two # 8-32 mtg inserts 4-7/8" c to c on lg edge; tuned by external variable capacitor.	Coupling, loop amplifier and nondirectional antenna into first RF stage. Used with R-101B/ARN-6	Magnavox Part 367973	Bendix N216169 and Magnavox 367973
L-104	AAF # 3C4021 ASO # R16-R-2193-40	COIL ASSEMBLY, RF: in aluminum can; tuned RF transformers, 4 bands, with built-in band switch; bands are 100-200 kc, 200-410 kc, 410-850 kc, 850-1750 kc, aluminum can is 5-1/2" lg x 4" wd x 1-3/4" h overall; components include C-142, C-143, C-144, C-145, L-120, L-121, L-122, L-123, S-108, S-109, E-111, E-114; can is stamped L-104 RF-1; two # 8-32 mtg inserts, 4-7/8" c to c on long edge, tuned by external variable capacitor.	Interstage coupling, 1st RF to 2nd RF. Used with R-101/ARN-6 and R-101A/ARN-6	Bendix Part No. N215390-1	Fairchild D424-R1 and Bendix N215390-1
	or	COIL ASSEMBLY, RF: in aluminum can; tuned RF xformers; 4 bands, with built-in band switch; bands are 100-200 kc, 200-410 kc, 410-850 kc, 850-1750 kc; aluminum can is 5-1/2" lg x 4" wd x 1-3/4" h over-all; components include L-121, L-122, L-123, L-120; S-108, S-109; C-136, C-137, C-138, C-139, C-141, C-142, C-143, C-144, C-145, C-146, C-149, C-150, C-2107, C-2108, C-2110; R-117, R-119, R-121, R-122, R-120; E-111, and E-114; can is stamped L-104 RF-1; two # 8-32 mtg inserts, 4-7/8" c to c on lg edge, tuned by external variable capacitor.	Interstage coupling, 1st RF to 2nd RF. Used with R-101B/ARN-6	Magnavox Part 367974	Bendix N216166 and Magnavox 367974

L-105	AAF # 3C4021 ASO # R16-R-2193-45	COIL ASSEMBLY, RF: RF transformer for 4 bands. Same as L-104 (except marking of Ref numbers).	Interstage coupling, 2nd RF to first detector. Used with R-101/ARN-6 and R-101A/ARN-6	Bendix Part No. N215392-1	Fairchild D424-S1 and Bendix N215392/1
	or	COIL ASSEMBLY, RF: RF xformer for 4 bands. Same as L-104 (except marking of Ref numbers).	Interstage coupling, 2nd RF to first detector. Used with R-101B/ARN-6	Magnavox Part 367975	Bendix N216167 and Magnavox 367975
L-106	AAF # 3C1084Z39-20 ASO # R16-R-2193-31	COIL ASSEMBLY, RF: in aluminum can, superheterodyne oscillator, four bands with built-in band switch; to produce 455 kc IF, band I (100-200 kc) and 142.5 kc IF bands II (200-410 kc), III (410-850 kc), and IV (850-1750 kc), aluminum can is 5-1/2" lg x 4" wd x 1-3/4" h overall; components include C-1110, C-1111, C-1113, C-1115, L-128, L-129, L-130, L-131, S-122, S-123, S-124, S-127, E-111, E-114; can is stamped L-106 RF-OSC; 2 #8-32 mtg inserts 4-7/8" c to c on long edge; tuned by external variable capacitor.	RF oscillator coils. Used with R-101/ARN-6 and R-101A/ARN-6	Bendix Part No. N215393-1	Fairchild D424-T1 and Bendix N215393-1
	or	COIL ASSEMBLY, RF: in aluminum can, superheterodyne oscillator, four bands with built-in band switch; to produce 455 kc IF, band I (100-200 kc) and 142.5 kc IF bands II (200-410 kc), III (410-850 kc), and IV (850-1750 kc), aluminum can is 5-1/2" lg x 4" wd x 1-3/4" h. over-all; components include L-128, L-129, L-130, L-131; S-122, S-123, S-124, S-127: C-192, C-1110, C-1111, C-1112, C-1113, C-1114, C-1115, C-1116, C-1117, C-1118, C-1119, C-1120, C-1121, C-1122, C-2115; can is stamped L-106 RF osc; 2 #8-32 mtg inserts 4-7/8" c to c on lg edge; tuned by external variable capacitor.	RF oscillator coils. Used with R-101B/ARN-6	Magnavox Part 367976	Bendix N216170 and Magnavox 367976
L-107	AAF # 3C323-175B ASO # R16-R-2193-50	COIL ASSEMBLY, AF: filter choke and oscillator autotransformer combined in one case; case is steel, closed, hot tin-dipped; consists of L-107A and L-107B; 4" lg x 1-3/8" sq, excluding terminals; case bears decal showing internal connections and elec values; 4 mtg inserts tapped #6-32 to depth of 7/32", on 1" sq centers.	Used with R-101/ARN-6, R-101A/ARN-6 and R-101B/ARN-6	Bendix Part No. C213470	Fairchild D424-106, Bendix C213470 and Magnavox 367891-1
L-107A		COIL, AF; autotransformer; single winding tapped to divide in ratio 4:9; resonated to 900 cps by 0.1 mf (C-1125) p/o L-107.	Audio oscillator. Used with R-101/ARN-6, R-101A/ARN-6 and R-101B/ARN-6		
L-107B		COIL, AF: filter choke; 0.65 hy; 12 ohms, rated 12 ma; p/o L-107.	Plate supply choke. Used with R-101/ARN-6, R-101A/ARN-6 and R-101B/ARN-6		

TABLE OF REPLACEABLE PARTS (Continued)

MODEL: Radio Compass AN/ARN-6 **MAJOR ASSEMBLY: Radio Compass Unit R-101/ARN-6, R-101A/ARN-6 and R-101B/ARN-6**

Reference Symbol	*Army Stock Number Navy Type Number British Ref. Number*	*Name of Part and Description*	*Function*	*Mfr. and Designation or JAN Type*	*Drawing Or Spec. No.*
L-108	AAF # 3C323-175A ASO # R16-R-1637	COIL, AF: filter choke, single winding: 0.1 hy at 5v, 60 cycles; 0.80 amp. 4 ohms approx 3" lg x 1-3/8" x 1-7/8", excluding projecting terminals; Sig C tentative spec 71-4942; 1000v 60 cps insulation test; enclosed metal case; four mtg inserts # 6-32, 1" x 1-3/8" c to c; varnish-impregnation coil; potted, tropicalized, two glass bead insulated solder terminals about 5/16" lg on bottom.	Power supply line filter, vibrator unit. Used with R-101/ARN-6, R-101A/ARN-6 and R-101B/ARN-6	Bendix Part No. C213478	Fairchild D424-107, Bendix C213478 and Magnavox 357801-1
L-109	AAF # 3C1084Z39-1 ASO # R16-T-7035-60	COIL, RF: RF transformer, two windings, universal wound; unshielded; in molded case approx 1-3/16" sq x 1-3/16" lg excluding adj screw and terminals; bakelite form, powdered iron core with secondary enclosed in powdered iron shell; tuned by adj iron core, external trimmer, and main tuning capacitor, C-111; two # 4-40 mtg inserts; 7 solder lug terminals projecting from side; stamped L-109.	Band # 1 transformer component of L-101. Used with R-101/ARN-6, R-101A/ARN-6 and R-101B/ARN-6	Bendix Part No. L215420-1	Fairchild C424-N2, Bendix L215420-1 and Magnavox 367860-1
L-110	AAF # 3C1084Z39-13 ASO # R16-T-7035-50	COIL, RF: RF transformer, two windings, universal wound; unshielded; in molded case approx 1-3/16" sq x 1-5/16" lg excluding adj screw and terminals; bakelite form, powdered iron core with secondary enclosed in powdered iron shell; tuned by adj iron core, external trimmer, and main tuning capacitor, C-111; two # 4-40 mtg inserts; 7 solder lug terminals projecting from side; stamped L-110.	Band # 3 transformer, component of L-101. Used with R-101/ARN-6, R-101A/ARN-6 and R-101B/ARN-6	Bendix Part No. L215432-1	Fairchild C424-N4, Bendix L215432-1 and Magnavox 367871-1
L-111	AAF # 3C1084Z39 ASO # R16-T-7035-120	COIL, RF: RF transformer, two wdgs, universal wound; unshielded; in molded case approx 1-3/16" sq x 1-5/16" lg excluding adj screws and terminals; bakelite form, powdered iron core with secondary enclosed in powdered iron shell; tuned by adj iron core, external trimmer, and main tuning capacitor, C-111, two # 4-40 mtg inserts; 7 solder lug terminals projecting from side; stamped L-111.	Band # 2 transformer, component of L-101. Used with R-101/ARN-6, R-101A/ARN-6 and R-101B/ARN-6	Bendix Part No. L215421-1	Fairchild C424-N3, Bendix L215421-1 and Magnavox 367861-1
L-112	AAF # 3C1084Z39-11 ASO # R16-T-7035-70	COIL, RF: RF transformer two windings, universal wound; unshielded; in molded case approx 1-3/16" sq x 1-5/16" lg excluding adj screw and terminals; bakelite form, powdered iron core with secondary enclosed in powdered iron shell; tuned by adj iron core, external trimmer, and main tuning capacitor, C-111, two # 4-40 mtg inserts; 7 solder lug terminals projecting from side; stamped L-112.	Band # 4 transformer, component of L-101. Used with R-101/ARN-6, R-101A/ARN-6 and R-101B/ARN-6	Bendix Part No. L215433-1	Fairchild C424-N5, Bendix L215433-1 and Magnavox 367872-1
L-113		COIL, RF: part of L-102 (phase-shifting unit).	Shunt inductance. Used with R-101/ARN-6, R-101A/ARN-6 and R-101B/ARN-6		

L-114		COIL, RF: part of L-102 (phase-shifting unit).	Series inductance. Used with R-101/ARN-6, R-101A/ARN-6 and R-101B/ARN-6		
L-115		COIL, RF: part of Z-101, (IF wave trap).	Resonating inductance. Used with R-101/ARN-6, R-101A/ARN-6 and R-101B/ARN-6		
L-116	AAF # 3C1084Z39-4 ASO # R16-T-7035-160	COIL, RF: RF transformer 3 windings, universal wound; unshielded; in molded case approx 1-3/16" sq x 1-5/16" lg excluding adj screw and terminals; bakelite form, powdered iron core with secondary enclosed in powdered iron shell; tuned by adj iron core external trimmer, and main tuning capacitor, C-111; two # 4-40 mtg inserts; 7 solder lug terminals projecting from side; stamped L-116.	Band # 1 transformer, component of L-103. Used with R-101/ARN-6, R-101A/ARN-6 and R-101B/ARN-6	Bendix Part No. L215422-1	Fairchild C424-P2, Bendix L215422-1 and Magnavox 367862-1
L-117	AAF # 3C1084Z39-6 ASO # R16-T-7035-130	COIL, RF: RF transformer, 3 windings universal wound; unshielded; in molded case approx 1-3/16" sq x 1-5/16" lg excluding adj screw and terminals; bakelite form, powdered iron core with secondary enclosed in powdered iron shell; tuned by adj iron core, external trimmer, and main tuning capacitor, C-111; two # 4-40 mtg inserts; 7 solder lug terminals projecting from side; stamped L-117.	Band # 3 transformer, component of L-103. Used with R-101/ARN-6, R-101A/ARN-6 and R-101B/ARN-6	Bendix Part No. L215424-1	Fairchild C424-P4, Bendix L215424-1 and Magnavox 367859-1
L-118	AAF # 3C1084Z39-8 ASO # R16-T-7035-160	COIL, RF: RF transformer, 3 windings universal wound; unshielded; in molded case approx 1-3/16" sq x 1-5/16" lg excluding adj screw and terminals, bakelite form, powdered iron core with secondary enclosed in powdered iron shell; tuned by adj iron core, external trimmer and main tuning capacitor, C-111; two # 4-40 mtg inserts; 7 solder lug terminals projecting from side; stamped L-118.	Band # 2 transformer, component of L-103. Used with R-101/ARN-6, R-101A/ARN-6 and R-101B/ARN-6	Bendix Part No. L215423-1	Fairchild C424-P3, Bendix L215423-1 and Magnavox 367863-1
L-119	AAF # 3C1084Z39-18 ASO # R16-T-7035-140	COIL, RF: RF transformer, 3 windings, universal wound; unshielded; in molded case approx 1-3/16" sq x 1-5/16" lg excluding adj screw and terminals; bakelite form, powdered iron core with secondary enclosed in powdered iron shell; tuned by adj iron core, external trimmer, and main tuning capacitor, C-111; two # 4-40 mtg inserts; 7 solder lug terminals projecting from side; stamped L-119.	Band # 4 transformer, component of L-103. Used with R-101/ARN-6, R-101A/ARN-6 and R-101B/ARN-6	Bendix Part No. L215431-1	Fairchild C424-P5, Bendix L215431-1 and Magnavox 367870-1
L-120	AAF # 3C1084Z39-9 ASO # R16-T-7035-67	COIL, RF: RF transformer, 2 windings, universal wound; unshielded; in molded case approx 1-3/16" sq x 1-5/16" lg excluding adj screw and terminals; bakelite form, powdered iron core with secondary enclosed in powdered iron shell; tuned by adj iron core, external trimmer, and main tuning capacitor: C-111, two # 4-40 mtg inserts; 7 solder lug terminals projecting from side; stamped L-120.	Band # 1 transformer, component of L-104. Used with R-101/ARN-6, R-101A/ARN-6 and R-101B/ARN-6	Bendix Part No. L215429-1	Fairchild C424-R2, Bendix L215429-1 and Magnavox 367868-1

TABLE OF REPLACEABLE PARTS (Continued)

MODEL: Radio Compass AN/ARN-6 **MAJOR ASSEMBLY: Radio Compass Unit R-101/ARN-6, R-101A/ARN-6 and R-101B/ARN-6**

Reference Symbol	*Army Stock Number Navy Type Number British Ref. Number*	*Name of Part and Description*	*Function*	*Mfr. and Designation or JAN Type*	*Drawing Or Spec. No.*
L-121	AAF # 3C1084Z39-2 ASO # R16-T-7035-65	COIL, RF: RF transformer, 2 windings, universal wound; unshielded; in molded case approx 1-3/16" sq x 1-5/16" lg excluding adj screw and terminals; bakelite form, powdered iron core with secondary enclosed in powdered iron shell; tuned by adj iron core, external trimmer, and main tuning capacitor, C-111, two # 4-40 mtg inserts; 7 solder lug terminals projecting from side; stamped L-121.	Band # 3 transformer, component of L-104. Used with R-101/ARN-6, R-101A/ARN-6 and R-101B/ARN-6	Bendix Part No. L215434-1	Fairchild C424-R4, Bendix L215434-1 and Magnavox 367873-1
L-122	AAF # 3C1084Z39-5 ASO # R16-T-7035-80	COIL, RF: RF transformer, 2 windings universal wound; unshielded; in molded case approx 1-3/16" sq x 1-5/16" lg excluding adj screw and terminals; bakelite form, powdered iron core with secondary enclosed in powdered iron shell; tuned by adj iron core, external trimmer, and main tuning capacitor, C-111; two # 4-40 mtg inserts; 7 solder lug terminals projecting from side; stamped L-122.	Band # 2 transformer, component of L-104. Used with R-101/ARN-6, R-101A/ARN-6 and R-101B/ARN-6	Bendix Part No. L215430-1	Fairchild C424-R3, Bendix L215430-1 and Magnavox 367869-1
L-123	AAF # 3C1084Z39-7 ASO # R16-T-7035-100	COIL, RF: RF transformer, 2 windings universal wound; unshielded; in molded case approx 1-3/16" sq x 1-5/16" lg excluding adj screw and terminals; bakelite form, powdered iron core with secondary enclosed in powdered iron shell; tuned by adj iron core, external trimmer, and main tuning capacitor, C-111; two # 4-40 mtg inserts; 7 solder lug terminals projecting from side; stamped L-123.	Band # 4 transformer component of L-104. Used with R-101/ARN-6, R-101A/ARN-6 and R-101B/ARN-6	Bendix Part No. L215435-1	Fairchild C424-R5, Bendix L215435-1 and Magnavox 367874-1
L-124	AAF # 3C1084Z39-9 ASO # R16-T-7035-68	COIL, RF: RF transformer, identical with L-120, except stamped Ref Symbol.	Band # 1 transformer, component of L-105. Used with R-101/ARN-6, R-101A/ARN-6 and R-101B/ARN-6	Bendix Part No. L215429-2	Fairchild C424-S2, Bendix L215429-2 and Magnavox 367868-2
L-125	AAF # 3C1084Z39-2 ASO # R16-T-7035-66	COIL, RF: RF transformer; identical with L-121 except for stamped Ref Symbol.	Band # 3 transformer, component of L-105. Used with R-101/ARN-6, R-101A/ARN-6 and R-101B/ARN-6	Bendix Part No. L215434-2	Fairchild C424-S4, Bendix L215434-2 and Magnavox 367873-2
L-126	AAF # 3C1084Z39-5 ASO # R16-T-7035-90	COIL, RF: RF transformer, identical with L-122, except for stamped Ref Symbol.	Band # 2 transformer, component of L-105. Used with R-101/ARN-6, R-101A/ARN-6 and R-101B/ARN-6	Bendix Part No. L215430-2	Fairchild C424-S3, Bendix L215430-2 and Magnavox 367869-2
L-127	AAF # 3C1084Z39-7 ASO # R16-T-7035-110	COIL, RF: RF transformer, identical with L-123, except for stamped Ref Symbol.	Band # 4 transformer, component of L-105. Used with R-101/ARN-6, R-101A/ARN-6 and R-101B/ARN-6	Bendix Part No. L215435-2	Fairchild C424-S5, Bendix L215435-2 and Magnavox 367874-2

L-128	AAF # 3C1084Z39-10 ASO # R16-T-7035-40	COIL, RF: RF transformer: 2 windings universal wound; unshielded; in molded case approx 1-3/16" sq x 1-5/16" lg excluding adj screw and terminals; bakelite form, powdered iron core; tuned by adj iron core, external trimmer, and tuning capacitor; two #4-40 mtg inserts; 7 solder lug terminals projecting from side; stamped L-128.	Band #1 oscillator transformer for L-106. Used with R-101/ARN-6, R-101A/ARN-6 and R-101B/ARN-6	Bendix Part No. L215425-1	Fairchild C424-T2, Bendix L215425-1 and Magnavox 367864-1
L-129	AAF # 3C1084Z39-19 ASO # R16-T-7035-20	COIL, RF: RF transformer 2 windings, universal wound; unshielded; in molded case approx 1-3/16" sq x 1-5/16" lg excluding adj screw and terminals; bakelite form, powdered iron core; tuned by adj iron core; external trimmer, and tuning capacitor, 2 #4-40 mtg inserts; 7 solder lug terminals projecting from side; stamped L-129.	Band #3 oscillator transformer for L-106. Used with R-101/ARN-6, R-101A/ARN-6 and R-101B/ARN-6	Bendix Part No. L215427-1	Fairchild C424-T4, Bendix L215427-1 and Magnavox 367866-1
L-130	AAF # 3C1084Z39-17 ASO # R16-T-7035-30	COIL, RF: RF transformer; 2 windings, universal wound; unshielded; in molded case approx 1-3/16" sq x 1-5/16" lg excluding adj screw and terminals; bakelite form, powdered iron core; tuned by adj iron core, external trimmer and tuning capacitor; two #4-40 mtg inserts; 7 solder lug terminals, projecting from side; stamped L-130.	Band #2 oscillator transformer for L-106. Used with R-101/ARN-6, R-101A/ARN-6 and R-101B/ARN-6	Bendix Part No. L215426-1	Fairchild C424-T3, Bendix L215426-1 and Magnavox 367865-1
L-131	AAF # 3C1084Z39-3 ASO # R16-T-7035-10	COIL, RF: RF transformer; 2 windings, universal wound; unshielded; in molded case approx 1-3/16" sq x 1-5/16" lg excluding adj screw and terminals; bakelite form, powdered iron core; tuned by adj iron core, external trimmer, and tuning capacitor; two #4-40 mtg inserts; 7 solder lug terminals projecting from side; stamped L-131.	Band #4 oscillator transformer for L-106. Used with R-101/ARN-6, R-101A/ARN-6 and R-101B/ARN-6	Bendix Part No. L215428-1	Fairchild C424-T5, Bendix L215428-1 and Magnavox 367867-1
L-132	AAF # 3C1084Z39-22 ASO # R16-C -27562-710	COIL, RF: choke, single winding layer wound; unshielded; 190 uh measured at 1000 cps, no DC in winding; coil is 1/2" diam x 19/32" lg incl phenolic ends, with axial studs 1-1/16" lg x #4-40 thd; powdered iron core; mounts by means of axial stud; ends of winding extend through holes in one end plate as leads.	Vibrator "hash" choke (Vibrator arm series). Used with R-101/ARN-6, R-101A/ARN-6 and R-101B/ARN-6	Bendix Part No. C-215375-1	Fairchild C424-M38, Bendix C215375-1 and Magnavox 367806-1
L-133	AAF # 3C1084Z39-24 ASO # R16-C-27634-10	COIL, RF: choke; single winding, layer wound; unshielded; 1.1 mh measured at 1000 cps, no DC in winding; coil is 3/4" diam x 27/32" lg incl phenolic ends, and joined with 7/8" sq terminal board, E-128, by axial stud, 1-29/64" lg x 6-32 thd; powdered iron core; mounts by means of axial stud; 2 soldering post terminals; terminal board is stamped L-133.	Noise filtering choke, for T-107, terminal 9. Used with R-101/ARN-6, R-101A/ARN-6 and R-101B/ARN-6	Bendix Part No. C215379-1	Fairchild C424-M49, Bendix C215379-1 and Magnavox 367830-1
L-134	AAF # 3C1084Z39-24 ASO # R16-C-27634-15	COIL, RF: same as L-133 except that terminal board is E-129, which is stamped L-134.	Noise filtering choke, for T-107, terminal 8. Used with R-101/ARN-6, R-101A/ARN-6 and R-101B/ARN-6	Bendix Part No. C215379-2	Fairchild C424-M34, Bendix C215379-2 and Magnavox 367830-2

TABLE OF REPLACEABLE PARTS (Continued)

MODEL: Radio Compass AN/ARN-6 **MAJOR ASSEMBLY: Radio Compass Unit R-101/ARN-6, R-101A/ARN-6 and R-101B/ARN-6**

Reference Symbol	*Army Stock Number Navy Type Number British Ref. Number*	*Name of Part and Description*	*Function*	*Mfr. and Designation or JAN Type*	*Drawing Or Spec. No.*
L-135	AAF # 3C1084Z39-21 ASO # R16-C-27634	COIL, RF: choke; single winding, layer wound; unshielded 11.5 mh measured at 1000 cps, no DC in winding; coil is 3/4" diam x 19/32" lg incl phenolic ends, and joined with 7/8" sq terminal board, E-130 by axial stud; 1-13/64" lg x 6-32 thd; powdered iron core; mounts by means of axial stud; 2 soldering post terminals; terminal board is stamped L-135.	Noise filtering choke, for T-107, terminal 5. Used with R-101/ARN-6, R-101A/ARN-6 and R-101B/ARN-6	Bendix Part No. C215377-1	Fairchild C424-M35, Bendix C215377-1 and Magnavox 367829-1
L-136	AAF # 3C1084Z39-25 ASO # R16-C-27634-1	COIL, RF: same as L-135, except coil connections to soldering posts are reversed, and is joined with terminal board E-136, which is stamped L-136.	Plate choke for V-115. Used with R-101/ARN-6, R-101A/ARN-6 and R-101B/ARN-6	Bendix Part No. C215376-2	Fairchild C424-M42, Bendix C215376-2 and Magnavox 367828-2
L-137	AAF # 3C1084Z39-25 ASO # R16-C-27634-2	COIL, RF: same as L-136, except is joined with terminal board E-135, which is stamped L-137.	Plate choke for V-116. Used with R-101/ARN-6, R-101A/ARN-6 and R-101B/ARN-6	Bendix Part No. C215376-1	Fairchild C424-M50, Bendix C215376-1 and Magnavox 367828-1
L-138	AAF # 3C1084Z39-26 ASO # R16-R-1638	REACTOR: audio; 1.45h, at 1000 cps, no specified DC current in winding; 28 ohms max DC resistance; 500v RMS test to case; hermetically sealed metal case is 7/8" diam x 1-9/16" lg with mtg bracket 3/8" wd extending 7/8" from side of case, and terminals extending 11/32" from end of case; mtg bracket has one mtg hole, # 27 dr, 15/16" from centerline of case; 2 solder lug terminals at one end.	Chokes out stray audio feedback from getting into RF stages. Used with R-101/ARN-6, R-101A/ARN-6 and R-101B/ARN-6	Bendix Part No. C213476	Fairchild D424-881, Bendix C213476 and Magnavox 357808-1
L-139	AAF # 3C336-120 ASO # R16-C -27631-105	COIL, RF: choke, single winding, 3 layer; unshielded, 65h at 1,000 cycles, 1" lg x 9/16" OD powdered iron core; two wire lead terminals.	Heater filter. Used with R-101A/ARN-6 and R-101B/ARN-6	Bendix Part No. C215033	Bendix C215033 and Magnavox 367827-1
O-101	AAF # 2Z6191-10 ASO # R16-L-5170	LINK, Arm: stainless steel; passivated; approx 7-19/32" lg x 3/8" wd x 1/16" thk; embossed with stiffening ridge to total thickness of 1/8"; one hole at each end to fit the crank pins being linked, 5/32" diam, 7.228" c to c.	Used in band switch mechanism. Used with R-101/ARN-6, R-101A/ARN-6 and R-101B/ARN-6	Bendix Part No. A242839	Fairchild B424-142, Bendix A242839 and Magnavox 638125-2
O-102	AAF # 2Z380-56 ASO # R17-A-8505	ARM: stainless steel; passivated; reciprocating crank; total hub length 59/64", 1-5/8" total arm length x 1" max diam excluding arm; bearing portion of hub is 7/16" diam, and crank pin, with 5/32" bearing diam, is 7/8" from center of hub; there is 1/8" aligning slot at 36° 15' from crank-pin line out across end of hub.	Used in band switch mechanism. Used with R-101/ARN-6, R-101A/ARN-6 and R-101B/ARN-6	Bendix Part No. L202908-1	Fairchild B424-AA12, Bendix L202908-1 and Magnavox 638123-1

O-103	AAF # 2Z3806.21 ASO # R16-D-4196	DISC ASSEMBLY, Geneva; stainless steel; passivated; combined geneva disc and crank, mounted on hub; hub is 1-5/32" lg x 1" max flange diam, 5-slot geneva disc is segment 1-1/18" radius max x 1/2" minimum radius at flange, and has crank pin with 5/32" diam bearing surface set 7/8" c to c from hub; there is 3/32" aligning slot cut across end of hub at 36-1/4° from crank-pin line.	Part of band-switch drive mechanism. Used with R-101/ARN-6, R-101A/ARN-6 and R-101B/ARN-6	Bendix Part No. L202913-1	Fairchild B424-AA10, Bendix L-202913-1 and Magnavox 638124-1
O-104	AAF # 2Z4872-97 ASO # R16-G-2843	GEAR: compound spur; stainless steel, passivated; .797" lg x 1.604" diam overall; comprises two spur gears permanently assembled, 18 and 75 teeth respectively, 48 pitch; integral shaft, 3/16" bearing diam, projects each end 1/8" from small gear and 3/8" (including shoulder) from large gear.	Intermediate band-switch drive mechanism. Used with R-101/ARN-6, R-101A/ARN-6 and R-101B/ARN-6	Bendix Part No. C202910-2	Fairchild B424-AA7, Bendix C202910-2 and Magnavox 638127-1
O-105	AAF # 2Z4872-160 ASO # R16-G-2754-107	GEAR: spur, with geneva operating pin and integral shaft; stainless steel; passivated; gear is 75T 48P, OD is 1.604", and has 3/16" pin centered 0.301" from shaft to operate geneva disc; shaft is 53/64" lg x 3/16" diam at brg surface, and has transverse channel cut close to gear to provide clearance for rotation of geneva disc; gear has five holes, 3/8" for weight reduction.	Part of band-switch drive mechanism. Used with R-101/ARN-6, R-101A/ARN-6 and R-101B/ARN-6	Bendix Part No. C202938-1	Fairchild B424-AA8, Bendix C202938-1 and Magnavox 638128-1
O-106	AAF # 2Z4878-126 ASO # R16-R-2844	GEAR: compound spur; stainless steel, passivated; .797" lg x 1.604" diam overall; comprises two spur gears permanently assembled, 18 and 75 teeth respectively, 48-pitch; integral shaft, 3/16" bearing diam, projects each end 1/4" from large gear and 1/8" from small gear.	Part of band-switch drive mechanism. Used with R-101/ARN-6, R-101A/ARN-6 and R-101B/ARN-6	Bendix Part No. C202910-1	Fairchild B424-AA6, Bendix C202910-1 and Magnavox 638127-1
O-107	AAF # 6L3943-7-IF ASO # R16-P-2515	PIN, alignment: stainless steel, passivated; .475" lg overall, 7/32" diam pin, 15/64" diam base, with hex flange 3/8" across flats; base tapped #6-32.	To align receiver unit in mounting. Used with R-101/ARN-6, R-101A/ARN-6 and R-101B/ARN-6	Bendix Part No. A241526	Fairchild B424-274, Bendix A241526 and Magnavox 117918-2
O-108	AAF # 2Z7858-67 ASO # R16-C -35980-802	RING, Adapter: to fit band-switch drive to operate aux switch wafer; phenolic, grade XP-SR; 7/8" OD x 7/16" ID x 7/32" thk; 2 setscrew holes #6-32, and slot across one face 0.074" wd x 0.078" d.	Part of band-switch drive. Used with R-101/ARN-6, R-101A/ARN-6 and R-101B/ARN-6	Bendix Part No. A233238	Fairchild B424-515, Bendix A233238 and Magnavox 117904-2
O-109	AAF # 2Z7858-71 ASO # R42-R-2785	RING, Retainer: external; spring steel tempered and blued; 1/64" thk; .262" OD to fit groove in 5/32" shaft.	Used in band-switch drive mechanism to retain link which connects the two switch shaft cranks. Used with R-101/ARN-6, R-101A/ARN-6 and R-101B/ARN-6	JAN HU848Y-156	Fairchild F78-5, Bendix HU848Y-156 and Magnavox 107945-1

TABLE OF REPLACEABLE PARTS (Continued)

MODEL: Radio Compass AN/ARN-6 **MAJOR ASSEMBLY: Radio Compass Unit R-101/ARN-6, R-101A/ARN-6 and R-101B/ARN-6**

Reference Symbol	*Army Stock Number Navy Type Number British Ref. Number*	*Name of Part and Description*	*Function*	*Mfr. and Designation or JAN Type*	*Drawing Or Spec. No.*
O-110	AAF # 2Z8203-147 ASO # R16-S-3876-120	SHAFT, Switch: phenolic, with stainless steel head; 10-1/8" lg overall, shaft 1/4" diam and 3/16" across flats, head 1/4" diam; straight cross-pin through head, 17/32" lg x 1/8" diam.	Band-switch shaft (RF coils). Used with R-101/ARN-6, R-101A/ARN-6 and R-101B/ARN-6	Bendix Part No. C202999-1	Fairchild B424-A13, Bendix C202999-1 and Magnavox 638107-1
O-111	AAF # 2Z8203-146 ASO # R16-S-3876-125	SHAFT, Switch: phenolic, with stainless steel head; 11-3/8" lg overall, shaft 1/4" diam and 3/16" across flats, head 1/4" diam; straight cross-pin through head, 17/32" lg x 3/32" diam.	Band-switch shaft (IF, IF trap, and BFO coils). Used with R-101/ARN-6, R-101A/ARN-6 and R-101B/ARN-6	Bendix Part No. C203033-1	Fairchild B424-A14, Bendix C203033-1 and Magnavox 638109-1
O-112	AAF # 2Z8552-50	SLEEVE, Insulating; phenolic: 5/16" lg; 0.128" ID; 1/4" OD.	Spaces switch-wafer from band-switch drive mechanism frame. Used with R-101/ARN-6, R-101A/ARN-6 and R-101B/ARN-6	Bendix Part No. OA18023-91	Fairchild B424-172, Bendix OA18023-91 and Magnavox 180273-12
P-101	AAF # 2Z7113.6 ASO # R17-R-1480	CONNECTOR, Male contact: 3 round contacts, polarized; straight type; 29/32" lg x 7/8" diam, with 1-3/16" sq flange; aluminum alloy body; molded bakelite insert; 4 mtg holes, 0.120" diam, on 20/32" sq mtg centers on flange; has coupling thd 7/8"-20 x 5/8" lg.	To receive cable from loop. Used with R-101/ARN-6, R-101A/ARN-6 and R-101B/ARN-6	Cannon Elec. #2057-1 and Amphenol AN3102-14S-1P	Army-Navy AN3102-14S-1P and Magnavox 180273-12
P-102	AAF # 2Z3042-12 ASO # R16-R-2523-45	CONNECTOR, Male contact: 22 round male contacts spaced 3/8" apart in straight lines; special type; 9-11/16" lg x 5/6" wd x 5/64" thk excluding contacts; no shell; contacts are mtd on phenolic strip; 2 mtg holes .234" diam spaced 9" on ctr-line; to mate with J-501; tropicalized.	Makes connections to receiver mtg. Used with R-101/ARN-6, R-101A/ARN-6 and R-101B/ARN-6	Bendix Part No. C202942-1	Fairchild C424-A11, Bendix C202942-1 and Magnavox 207824-1
P-103		CONNECTOR, Male contact; single round pin, no shell, body, or insulation; solders to end of shielded wire; to fit J-102.	Signal input to V-115, V-116. Used with R-101/ARN-6, R-101A/ARN-6 and R-101B/ARN-6		Magnavox 187825-2
R-100	AAF # 3RC10BF272K ASO # R16-R-17275-75	RESISTOR, Fixed: composition; 2700 ohms ±10%; 1/4 watt.	2nd IF silencing bias. Used with R-101/ARN-6, R-101A/ARN-6 and R-101B/ARN-6	JAN type RC10BF272K	JAN-R-11 Magnavox 237803-67

R-101	AAF # 3RC10BF224K ASO # R16-R -17351-550	RESISTOR, Fixed: composition; 220,000 ohms ±10%; 1/4 watt.	Grid return, V-101. Used with R-101/ARN-6, R-101A/ARN-6 and R-101B/ARN-6	JAN type RC10BF224K	JAN-R-11 Magnavox 237803-90
R-102	AAF # 3RC10BF391J	RESISTOR, Fixed: composition, 390 ohms ±5%, 1/4 watt.	Cathode bias, V-101. Used with R-101/ARN-6	JAN type RC10BF391J	JAN-R-11
	or AAF # 3RC10BF681J ASO # R16-R -17264-56-4	RESISTOR, Fixed: composition; 680 ohms ±5%; 1/4 watt.	Cathode bias V-101. Used with R-101A/ARN-6 and R-101B/ARN-6	JAN type RC10BF681J	JAN-R-11 Magnavox 237803-155
R-103	AAF # 3RC10BF102K ASO # R16-R -17264-130-750	RESISTOR, Fixed: composition; 1000 ohms ±10%; 1/4 watt.	Decoupling, screen, V-101. Used with R-101/ARN-6, R-101A/ARN-6 and R-101B/ARN-6	JAN type RC10BF102K	JAN-R-11 Magnavox 237803-62
R-104	AAF # 3RC10BF105M ASO # R16-R-17372-8	RESISTOR, Fixed: composition; 1 megohm ±20%; 1/4 watt.	Antenna static leak. Used with R-101/ARN-6, R-101A/ARN-6 and R-101B/ARN-6	JAN type RC10BF105M	JAN R-11 Magnavox 237803-31
R-105	AAF # 3RC10BF681J ASO # R16-R -17264-56-4	RESISTOR, Fixed: composition; 680 ohms ±5%; 1/4 watt.	Decoupling plate, V-101. Used with R-101/ARN-6, R-101A/ARN-6 and R-101B/ARN-6	JAN type RC10BF681J	JAN-R-11 Magnavox 237803-155
R-106	AAF # 3RC10BF224K ASO # R16-R -17351-550	RESISTOR, Fixed: composition; 220,000 ohms ±10%; 1/4 watt. Same as R-101.	Grid resistor, V-102B. Used with R-101/ARN-6, R-101A/ARN-6 and R-101B/ARN-6		
R-107	AAF # 3RC10BF224K ASO # R16-R -17351-550	RESISTOR, Fixed: composition; 220,000 ohms ±10%; 1/4 watt. Same as R-101.	Grid resistor, V-102A. Used with R-101/ARN-6, R-101A/ARN-6 and R-101B/ARN-6		
R-108	AAF # 3RC10BF224K ASO # R16-R -17351-550	RESISTOR, Fixed: composition; 220,000 ohms ±10%; 1/4 watt. Same as R-101.	Cathode cutoff control, V-102. Used with R-101/ARN-6, R-101A/ARN-6 and R-101B/ARN-6		
R-109	AAF # 3RC10BF473K ASO # R16-R-17331-10	RESISTOR, Fixed: composition, 47,000 ohms ±10%; 1/4 watt.	Cathode cutoff control, V-102. Used with R-101/ARN-6, R-101A/ARN-6 and R-101B/ARN-6	JAN type RC10BF473K	JAN-R-11 Magnavox 237803-82
R-110	AAF # 3RC10BF222K ASO # R16-R -17273-20-500	RESISTOR, Fixed: composition; 2,200 ohms ±10%; 1/4 watt.	Cathode bias, V-102. Used with R-101/ARN-6, R-101A/ARN-6 and R-101B/ARN-6	JAN type RC10BF222K	JAN-R-11 Magnavox 237803-66

TABLE OF REPLACEABLE PARTS (Continued)

MODEL: Radio Compass AN/ARN-6 **MAJOR ASSEMBLY: Radio Compass Unit R-101/ARN-6, R-101A/ARN-6 and R-101B/ARN-6**

Reference Symbol	*Army Stock Number Navy Type Number British Ref. Number*	*Name of Part and Description*	*Function*	*Mfr. and Designation or JAN Type*	*Drawing Or Spec. No.*
R-111	AAF # 3RC10BF224K ASO # R16-R -17351-550	RESISTOR, Fixed: composition; 220,000 ohms ± 10%; 1/4 watt. Same as R-101.	Grid resistor, V-102B. Used with R-101/ARN-6, R-101A/ARN-6 and R-101B/ARN-6		
R-112	AAF # 3RC10BF224K ASO # R16-R -17351-550	RESISTOR, Fixed: composition; 220,000 ohms ± 10%; 1/4 watt. Same as R-101.	Grid resistor, V-102B. Used with R-101/ARN-6, R-101A/ARN-6 and R-101B/ARN-6		
R-113	AAF # 3RC10BF391J ASO # R16-R -17263-29-750	RESISTOR, Fixed: composition; 390 ohms ± 5%; 1/4 watt. Same as R-102.	Decoupling, plate and screen supply, V-102. Used with R-101/ARN-6, R-101A/ARN-6 and R-101B/ARN-6		
R-114	AAF # 3RC10BF105M ASO # R16-R-17372-8	RESISTOR, Fixed: composition; 1 megohm ± 20%; 1/4 watt. Same as R-104.	Grid resistor, V-103. Used with R-101/ARN-6, R-101A/ARN-6 and R-101B/ARN-6		
R-115	AAF # 3RC10BF391J ASO # R16-R -17263-29-750	RESISTOR, Fixed: composition, 390 ohms ± 5%; 1/4 watt. Same as R-102.	Cathode bias, V-104. Used with R-101/ARN-6, R-101A/ARN-6 and R-101B/ARN-6		
R-116	AAF # 3RC10BF102K ASO # R16-R -17264-130-750	RESISTOR, Fixed: composition, 1000 ohms ± 10%; 1/4 watt. Same as R-103.	Decoupling, screen, V-103. Used with R-101/ARN-6, R-101A/ARN-6 and R-101B/ARN-6		
R-117	AAF # 3RC10BF123J ASO # R16-R -17310-42-42	RESISTOR, Fixed: composition, 12,000 ohms ± 5%; 1/4 watt.	Stage gain compensating, L-104. Used with R-101/ARN-6, R-101A/ARN-6 and R-101B/ARN-6	JAN type RC10BF123J	JAN-R-11 Magnavox 237803-185
R-118	AAF # 3RC10BF681J ASO # R16-R -17264-56-4	RESISTOR, Fixed: composition, 680 ohms ± 5%; 1/4 watt. Same as R-105.	Decoupling, plate, V-103. Used with R-101/ARN-6, R-101A/ARN-6 and R-101B/ARN-6		
R-119	AAF # 3RC10BF224K ASO # R16-R -17351-550	RESISTOR, Fixed: composition, 220,000 ohms ± 10%; 1/4 watt.	Grid resistor, V-104. Used with R-101/ARN-6, R-101A/ARN-6 and R-101B/ARN-6		Magnavox 237803-90

R-120	AAF # 3RC10BF240J ASO # R16-R -17258-4-58	RESISTOR, Fixed: composition, 24 ohms ±5%; 1/4 watt. Same as R-101.	"Q" equalizer, Band 1, 1st RF. Used with R-101/ARN-6, R-101A/ARN-6 and R-101B/ARN-6	JAN type RC10BF240J	JAN-R-11 Magnavox 237803-120
R-121	AAF # 3RC10BF100J ASO # R16-R -17256-53-25	RESISTOR, Fixed: composition; 10 ohms ±5%; 1/4 watt.	"Q" equalizer, Band 3, 1st RF. Used with R-101/ARN-6, R-101A/ARN-6 and R-101B/ARN-6	JAN type RC10BF100J	JAN-R-11 Magnavox 237803-111
R-122	AAF # RC10BF240J ASO # R16-R -17258-4-58	RESISTOR, Fixed: composition; 24 ohms ±5%; 1/4 watt. Same as R-120.	"Q" equalizer, Band 2, 1st RF. Used with R-101/ARN-6, R-101A/ARN-6 and R-101B/ARN-6		
R-123	AAF # 3RC10BF391J ASO # R16-R -17263-29-750	RESISTOR, Fixed: composition; 390 ohms ±5%; 1/4 watt. Same as R-102.	Cathode bias, V-103. Used with R-101/ARN-6, R-101A/ARN-6 and R-101B/ARN-6		
R-124	AAF # 3RC10BF102K ASO # R16-R -17264-130-750	RESISTOR, Fixed: composition; 1000 ohms ±10%; 1/4 watt. Same as R-103.	Decoupling, screen, V-104. Used with R-101/ARN-6, R-101A/ARN-6 and R-101B/ARN-6		
R-125	AAF # 3RC10BF334K ASO # R16-R -17354-4-400	RESISTOR, Fixed: composition; 330,000 ohms ±10%; 1/4 watt. *See* par. 2.*b.*, this section.	Diode load dividing, V-108. Used with R-101/ARN-6, R-101A/ARN-6 and R-101B/ARN-6	JAN type RC10BF334K	JAN-R-11 Magnavox 237803-92
R-126	AAF # 3RC10BF681J ASO # R16-R -17264-56-4	RESISTOR, Fixed: composition; 680 ±5%; 1/4 watt. Same as R-105.	Decoupling, plate, V-104. Used with R-101/ARN-6, R-101A/ARN-6 and R-101B/ARN-6		
R-127	AAF # 3RC10BF224K ASO # R16-R -17351-550	RESISTOR, Fixed: composition; 220,000 ohms ±10%; 1/4 watt. Same as R-101.	Grid resistor, V-105. Used with R-101/ARN-6, R-101A/ARN-6 and R-101B/ARN-6		
R-128	AAF # 3RC10BF240J ASO # R16-R -17258-4-58	RESISTOR, Fixed: composition; 24 ohms ±5%; 1/4 watt. Same as R-120.	"Q" equalizer, Band 1, 2nd RF. Used with R-101/ARN-6, R-101A/ARN-6 and R-101B/ARN-6		
R-129	AAF # 3RC10BF100J ASO # R16-R -17256-53-25	RESISTOR, Fixed: composition; 10 ohms ±5%; 1/4 watt. Same as R-121.	"Q" equalizer, Band 3, 2nd RF. Used with R-101/ARN-6, R-101A/ARN-6 and R-101B/ARN-6		Magnavox 237803-111

TABLE OF REPLACEABLE PARTS (Continued)

MODEL: Radio Compass AN/ARN-6 **MAJOR ASSEMBLY: Radio Compass Unit R-101/ARN-6, R-101A/ARN-6 and R-101B/ARN-6**

Reference Symbol	*Army Stock Number Navy Type Number British Ref. Number*	*Name of Part and Description*	*Function*	*Mfr. and Designation or JAN Type*	*Drawing Or Spec. No.*
R-130	AAF # 3RC10BF240J ASO # R16-R -17258-4-58	RESISTOR, Fixed: composition; 24 ohms ±5%; 1/4 watt. Same as R-120.	"Q" equalizer, Band 2, 2nd RF. Used with R-101/ARN-6, R-101A/ARN-6 and R-101B/ARN-6		
R-131	AAF # 3RC10BF223K ASO # R16-R -17310-165	RESISTOR, Fixed: composition; 22,000 ohms ±10%; 1/4 watt.	Grid leak, V-105. Used with R-101/ARN-6, R-101A/ARN-6 and R-101B/ARN-6	JAN type RC10BF223K	JAN-R-11 Magnavox 237803-78
R-132	AAF # 3RC10BF471J ASO # R16-R -17263-58-10	RESISTOR, Fixed: composition; 470 ohms ±5%; 1/4 watt.	Cathode bias, V-105. Used with R-101/ARN-6, R-101A/ARN-6 and R-101B/ARN-6	JAN type RC10BF471J	JAN-R-11 Magnavox 237803-151
R-133	AAF # 3RC10BF681J ASO # R16-R -17264-56-4	RESISTOR, Fixed: composition; 680 ohms ±5%; 1/4 watt. Same as R-105.	Decoupling, screen, V-105. Used with R-101/ARN-6, R-101A/ARN-6 and R-101B/ARN-6		
R-134	AAF # 3RC10BF332J ASO # R16-R -17279-0-725	RESISTOR, Fixed: composition; 3300 ohms ±5%; 1/4 watt.	Cathode bias, V-113B. Used with R-101/ARN-6, R-101A/ARN-6 and R-101B/ARN-6	JAN type RC10BF332J	JAN-R-11 Magnavox 237803-171
R-135	AAF # 3RC10BF102K ASO # R16-R -17264-130-750	RESISTOR, Fixed: composition; 1000 ohms ±10%; 1/4 watt. Same as R-103.	Decoupling, plate, V-105. Used with R-101/ARN-6, R-101A/ARN-6 and R-101B/ARN-6		
R-136	AAF # 3RC10BF224K ASO # R16-R -17351-550	RESISTOR, Fixed: composition; 220,000 ohms ±10%; 1/4 watt. Same as R-101.	Primary "Q" reduction, T-101. Used with R-101/ARN-6, R-101A/ARN-6 and R-101B/ARN-6		
R-137	AAF # 3RC10BF471J	RESISTOR, Fixed: composition; 470 ohms ±5%; 1/4 watt. Same as R-132.	Cathode bias, V-106. Used with R-101/ARN-6		
	or AAF # 3RC10BF681J ASO # R16-R -17264-56-4	RESISTOR, Fixed: composition 680 ohms ±5%; 1/4 watt. Same as R-102.**	Cathode bias. V-106. Used with R-101A/ARN-6 and R-101B/ARN-6		
R-138	AAF # 3RC10BF102K ASO # R16-R -17264-130-750	RESISTOR, Fixed: composition; 1,000 ohms ±10%; 1/4 watt. Same as R-103.	Decoupling, screen, V-106. Used with R-101/ARN-6, R-101A/ARN-6 and R-101B/ARN-6		

**In earlier models, resistor R-137 is 470 ohms ±5%, 1/4 watt, same as R-132.

R-139	AAF # 3RC10BF681J ASO # R16-R -17264-56-4	RESISTOR, Fixed: composition; 680 ohms ±5%; 1/4 watt. Same as R-105.	Decoupling, plate, V-106. Used with R-101/ARN-6, R-101A/ARN-6 and R-101B/ARN-6		
R-140	AAF # 3RC10BF224K ASO # R16-R -17351-550	RESISTOR, Fixed: composition; 220,000 ohms ±10%; 1/4 watt. Same as R-101.	Primary "Q" reduction, T-102. Used with R-101/ARN-6, R-101A/ARN-6 and R-101B/ARN-6		
R-141	AAF # 3RC10BF154J ASO # R16-R -17347-500	RESISTOR, Fixed: composition 150,000 ohms ±5%; 1/4 watt.	Suppressor grid return, V-107. Used with R-101/ARN-6, R-101A/ARN-6 and R-101B/ARN-6	JAN type RC10BF154J	JAN-R-11 Magnavox 237803-211
R-142	AAF # 3RC10BF272K ASO # R16-R-17275-75	RESISTOR, Fixed: composition; 2700 ohms ±10%; 1/4 watt. Same as R-100.	Cathode bias, V-107. Used with R-101/ARN-6, R-101A/ARN-6 and R-101B/ARN-6		
R-143	AAF # 3RC10BF102K ASO # R16-R -17264-130-750	RESISTOR, Fixed: composition; 1000 ohms ±10%; 1/4 watt. Same as R-103.	Decoupling, screen, V-107. Used with R-101/ARN-6, R-101A/ARN-6 and R-101B/ARN-6		
R-144	AAF # 3RC10BF681J ASO # R16-R -17264-56-4	RESISTOR, Fixed: composition; 680 ohms ±5%; 1/4 watt. Same as R-105.	Decoupling, plate, V-107. Used with R-101/ARN-6, R-101A/ARN-6 and R-101B/ARN-6		
R-145	AAF # 3RC10BF684K ASO # R16-R-17363-39	RESISTOR, Fixed: composition; 680,000 ohms ±10%; 1/4 watt.	AVC filter network. Used with R-101/ARN-6, R-101A/ARN-6 and R-101B/ARN-6	JAN type RC10BF684K	JAN-R-11 Magnavox 237803-96
R-146	AAF # 3RC10BF105J ASO # R16-R -17370-500	RESISTOR, Fixed: composition; 1 megohm ±5%; 1/4 watt.	AVC filter voltage divider. Used with R-101/ARN-6, R-101A/ARN-6 and R-101B/ARN-6	JAN type RC10BF105J	JAN-R-11 Magnavox 237803-231
R-147	AAF # 3RC10BF684K ASO # R16-R-17363-39	RESISTOR, Fixed: composition; 680,000 ohms ±10%; 1/4 watt. Same as R-145.	AVC filter network. Used with R-101/ARN-6, R-101A/ARN-6 and R-101B/ARN-6		
R-148	AAF # 3RC10BF334K ASO # R16-R -17354-4-400	RESISTOR, Fixed: composition; 330,000 ohms ±10%; 1/4 watt. Same as R-125.	AVC filter voltage divider. Used with R-101/ARN-6, R-101A/ARN-6 and R-101B/ARN-6		

TABLE OF REPLACEABLE PARTS (Continued)

MODEL: Radio Compass AN/ARN-6 **MAJOR ASSEMBLY: Radio Compass Unit R-101/ARN-6, R-101A/ARN-6 and R-101B/ARN-6**

Reference Symbol	*Army Stock Number Navy Type Number British Ref. Number*	*Name of Part and Description*	*Function*	*Mfr. and Designation or JAN Type*	*Drawing Or Spec. No.*
R-149	AAF # 3RC10BF474K ASO # R16-R -17354-14-132	RESISTOR, Fixed: composition; 470,000 ohms ± 10%; 1/4 watt.	AVC filter network. Used with R-101/ARN-6, R-101A/ARN-6 and R-101B/ARN-6	JAN type RC20BF474K	JAN-R-11 Magnavox 237803-94
R-150	AAF # 3RC10BF474K ASO # R16-R -17354-14-132	RESISTOR, Fixed: composition; 470,000 ohms ± 10%; 1/4 watt. *See* par. 2.*b.*, this section.	Diode voltage divider, V-108. Used with R-101/ARN-6, R-101A/ARN-6 and R-101B/ARN-6		Magnavox 237803-94
R-151	AAF # 3RC10BF104J ASO # R16-R -17344-176-750	RESISTOR, Fixed: composition; 100,000 ohms ± 5%; 1/4 watt.	Input filter, grid, V-108. Used with R-101/ARN-6, R-101A/ARN-6 and R-101B/ARN-6	JAN type RC10BF104J	JAN-R-11 Magnavox 237803-207
R-152	AAF # 3RC10BF123J ASO # R16-R -17310-42-42	RESISTOR, Fixed: composition; 12,000 ohms ± 5%; 1/4 watt. Same as R-117.	Stage gain compensating, L-105. Used with R-101/ARN-6, R-101A/ARN-6 and R-101B/ARN-6		
R-153	AAF # 3RC10BF562K ASO # R16-R -17291-52-575	RESISTOR, Fixed: composition; 5600 ohms ± 10%; 1/4 watt.	Cathode bias, V-108. Used with R-101/ARN-6, R-101A/ARN-6 and R-101B/ARN-6	JAN type RC10BF562K	JAN-R-11 Magnavox 237803-71
R-154	AAF # 3RC10BF473K ASO # R16-R-17331-10	RESISTOR, Fixed: composition; 47,000 ohms ± 10%; 1/4 watt. Same as R-109.	Plate load, V-108. Used with R-101/ARN-6, R-101A/ARN-6 and R-101B/ARN-6		
R-155	AAF # 3RC10BF473K ASO # R16-R-17331-10	RESISTOR, Fixed: composition; 47,000 ohms ± 10%; 1/4 watt. Same as R-109.	Oscillator grid leak, V-109A. Used with R-101/ARN-6, R-101A/ARN-6 and R-101B/ARN-6		
R-156	AAF # 3RC10BF681J ASO # R16-R -17264-56-4	RESISTOR, Fixed: composition; 680 ohms ± 5%; 1/4 watt. Same as R-105.	Oscillator plate series, V-109A. Used with R-101/ARN-6, R-101A/ARN-6 and R-101B/ARN-6		

R-157	AAF # 3RC10BF222K ASO # R16-R -17273-20-500	RESISTOR, Fixed: composition; 2200 ohms ±10%; 1/4 watt. Same as R-110.	Decoupling, plate, V-109B. Used with R-101/ARN-6, R-101A/ARN-6 and R-101B/ARN-6		
R-158	AAF # 3RC10BF471J ASO # R16-R -17263-58-10	RESISTOR, Fixed: composition; 470 ohms ±5%; 1/4 watt. Same as R-132.	Cathode bias, V-109B. Used with R-101/ARN-6, R-101A/ARN-6 and R-101B/ARN-6		
R-159	AAF # 3RC10BF222K ASO # R16-R -17273-20-500	RESISTOR, Fixed: composition; 2200 ohms ±10%; 1/4 watt. Same as R-110.	Decoupling, plate, V-109A. Used with R-101/ARN-6, R-101A/ARN-6 and R-101B/ARN-6		
R-160	AAF # 3RC10BF222K ASO # R16-R -17273-20-500	RESISTOR, Fixed: composition; 2200 ohms ±10%; 1/4 watt. Same as R-110.	Cathode bias, V-110A. Used with R-101/ARN-6, R-101A/ARN-6 and R-101B/ARN-6		
R-161	AAF # 3RC10BF222K ASO # R16-R -17273-20-500	RESISTOR, Fixed: composition; 2200 ohms ±10%; 1/4 watt. Same as R-110.	Decoupling, plate, V-110A. Used with R-101/ARN-6, R-101A/ARN-6 and R-101B/ARN-6		
R-162	AAF # 3RC10BF332J ASO # R16-R -17279-0-725	RESISTOR, Fixed: composition; 3300 ohms ±5%; 1/4 watt. Same as R-134.	Audio feedback network to cathode of V-110B. Used with R-101/ARN-6, R-101A/ARN-6 and R-101B/ARN-6		
R-163	AAF # 3RC10BF682J ASO # R16-R -17293-52-250	RESISTOR, Fixed: composition; 6800 ohms ±5%; 1/4 watt.	Audio feedback network. Used with R-101/ARN-6, R-101A/ARN-6 and R-101B/ARN-6	JAN type RC10BF682J	JAN-R-11 Magnavox 237802-179
R-164	AAF # 3RC10BF332J ASO # R16-R -17279-0-725	RESISTOR, Fixed: composition; 3300 ohms ±5%; 1/4 watt. Same as R-134.	Audio feedback network. Used with R-101/ARN-6, R-101A/ARN-6 and R-101B/ARN-6		
R-165	AAF # 3RC10BF682J ASO # R16-R -17293-52-250	RESISTOR, Fixed: composition; 6800 ohms ±5%; 1/4 watt. Same as R-163.	Audio feedback network. Used with R-101/ARN-6, R-101A/ARN-6 and R-101B/ARN-6		
R-166	AAF # RC10BF751J ASO # R16-R -17264-69-250	RESISTOR, Fixed: composition; 750 ohms ±5%; 1/4 watt.	Cathode bias, V-110B. Used with R-101/ARN-6, R-101A/ARN-6 and R-101B/ARN-6	JAN type RC10BF751J	JAN-R-11 Magnavox 237803-156

TABLE OF REPLACEABLE PARTS (Continued)

MODEL: Radio Compass AN/ARN-6 **MAJOR ASSEMBLY: Radio Compass Unit R-101/ARN-6, R-101A/ARN-6 and R-101B/ARN-6**

Reference Symbol	*Army Stock Number Navy Type Number British Ref. Number*	*Name of Part and Description*	*Function*	*Mfr. and Designation or JAN Type*	*Drawing Or Spec. No.*
R-167	AAF # 3RC10BF221J ASO # R16-R -17262-55-29	RESISTOR, Fixed: composition; 220 ohms ±5%; 1/4 watt.	Cathode bias, V-110B. Used with R-101/ARN-6, R-101A/ARN-6 and R-101B/ARN-6	JAN type RC10BF221J	JAN-R-11 Magnavox 237803-143
R-168	AAF # 3RC10BF105J ASO # R16-R -17370-500	RESISTOR, Fixed: composition; 1 megohm ±5%; 1/4 watt. Same as T-146.	Grid leak, V-110B. Used with R-101/ARN-6, R-101A/ARN-6 and R-101B/ARN-6		
R-169	AAF # 3RC10BF563K ASO # R16-R -17338-1-80	RESISTOR, Fixed: composition; 56,000 ohms ±10%; 1/4 watt.	Input filter, V-110B. Used with R-101/ARN-6, R-101A/ARN-6 and R-101B/ARN-6	JAN type RC10BF563K	JAN-R-11 Magnavox 237803-83
R-170	AAF # 3RC10BF334K ASO # R16-R -17354-4-400	RESISTOR, Fixed: composition; 330,000 ohms ±10%; 1/4 watt. Same as R-125.	Voltage, divider loop feedback. Used with R-101/ARN-6, R-101A/ARN-6 and R-101B/ARN-6		
R-171	AAF # 3RC10BF563K ASO # R16-R -17338-1-80	RESISTOR, Fixed: composition; 56,000 ohms ±10%; 1/4 watt. Same as R-169.	Input filter, V-110B. Used with R-101/ARN-6, R-101A/ARN-6 and R-101B/ARN-6		
R-172		RESISTOR, Fixed: composition; 100,000 ohms. (Part of T-105).	Audio output grid leak, V-111, V-112. Used with R-101/ARN-6, R-101A/ARN-6 and R-101B/ARN-6		
R-173	AAF # 3RC10BF101K ASO # R16-R -17260-183	RESISTOR, Fixed: composition 100 ohms ±10%; 1/4 watt.	Parasitic suppressor, V-111. Used with R-101/ARN-6, R-101A/ARN-6 and R-101B/ARN-6	JAN type RC10BF101K	JAN-R-11 Magnavox 237803-50
R-174	AAF # 3RC10BF101K ASO # R16-R -17260-183	RESISTOR, Fixed: composition; 100 ohms ±10%; 1/4 watt. Same as R-173.	Parasitic suppressor, V-112. Used with R-101/ARN-6, R-101A/ARN-6 and R-101B/ARN-6		
R-175	AAF # 3RC10BF101K ASO # R16-R -17260-183	RESISTOR, Fixed: composition; 100 ohms ±10%; 1/4 watt. Same as R-173.	Parasitic suppressor, V-111. Used with R-101/ARN-6, R-101A/ARN-6 and R-101B/ARN-6		

H-306		(Reference number not assigned.)			
H-307	AAF # 6L18069-9.54B ASO # R16-S-2209-48	SCREW, Machine: flat fil H; blk nickel plate; 9/16"-24 threading for 1/4" nearest head, and 5/16" unthreaded, 13/32" diam, at point; head is 19/32" diam x 7/32" thk, slotted 1/16" x 1/16"; has 5/16" axial hole drilled 9/16" d from point, and point is relieved by cupping 3/16" spherical radius.	Holds dial light in receptacle. Used with C-149/ARN-6 and C-149A/ARN-6	Bendix Part No. A241524	Fairchild B424-550, Bendix A241524 and Magnavox 108222-1
H-308	AAF # 6L20908,39.2 ASO # R16-S-2209-44	SCREW, Machine: OH; stainless steel; # 8-32, 2-7/16" lg threaded 5/16"; # 54 drill hole for tie wire, at end of threading.	Fastens control box to mounting M-275/ARN-6. Used with C-149/ARN-6 and C-149A/ARN-6	Bendix Part No. A241523	Fairchild B424-222, Bendix A241523 and Magnavox 108222-4
H-309	AAF # 6L18609-6.32B ASO # R16-S-2209-50	SCREW, Set: brass, black nickel pl; 9/16"-24 thd; 3/8" lg; screwdriver slot, csk 90° to 7/16" diam at tip.	Retaining plug for spare lamp. Used with C-149/ARN-6 and C-149A/ARN-6	Bendix Part No. A233222	Fairchild B424-683, Bendix A233222 and Magnavox 108223-1
H-310	AAF # 2Z8877.145 ASO # R16-S-8747-5	SPRING: coil, compression; stainless steel, passivated 17/32" lg x .383 OD; 6t .040 wire wound .088" pitch.	For "Control" push button. Used with C-149/ARN-6 and C-149A/ARN-6	Bendix Part No. A239610	Fairchild B424-663, Bendix A239610 and Magnavox 108224-1
H-311	AAF # 2Z8877.146 ASO # R16-S-8747	SPRING: coil, tension; stainless steel, spring tempered, passivated; approx 27/32" ID; 1-1/2" turns .045 wire 5/16" lg overall including end hooks.	For "Loop L-R" control. Used with C-149/ARN-6 and C-149A/ARN-6	Bendix Part No. A239460	Fairchild B424 754, Bendix A239460 and Magnavox 108226-1
H-312	AAF # 2Z8877.147 ASO # R16-S-8747-10	SPRING: coil, tension; stainless steel; passivated; approx. 1" lg x 7/32" OD; 5/32" loops at ends are 7/8" c to c.	For "Band Switch" detent. Used with C-149/ARN-6 and C-149A/ARN-6	Bendix Part No. A239612	Fairchild B424-214, Bendix A239612 and Magnavox 108225-1
H-313	AAF # 6L34156-1	COLLAR, Locking: switch anti-rotation device; half-hard aluminum caustic dip; 1-3/16" OD x 25/64" ID x 11/32" thk; 5/32" slot one side, staked protrusion on other.	Prevents rotation of function selector-switch. Used with C-149/ARN-6 and C-149A/ARN-6	Bendix Part No. A239605	Fairchild B424-682, Bendix A239605 and Magnavox 118278-1
H-314	AAF # 6L58022-23	WASHER, Flat: steel, hard-tempered # 1; 9/64" ID; 1/4" OD; 3/64" thk.	Used on guide pins of 25-contact connector. Used with C-149/ARN-6 and C-149A/ARN-6	Bendix Part No. OA17005-43	Fairchild B424-215 and Bendix OA17005-43
H-315		(Reference number not assigned.)			
H-316		(Reference number not assigned.)			
H-317	AAF # 6L58010-1	WASHER, Flat: stainless steel; 13/64" ID; 3/8" OD; 0.010" thk.	Used under detent arm. Used with C-149/ARN-6 and C-149A/ARN-6	Bendix Part No. OA18019-97	Fairchild B424-657 and Bendix OA18019-97
H-318		(Reference number not assigned.)			

TABLE OF REPLACEABLE PARTS (Continued)

MODEL: Radio Compass AN/ARN-6

MAJOR ASSEMBLY: Control Box C-149/ARN-6 and C-149A/ARN-6

Reference Symbol	*Army Stock Number Navy Type Number British Ref. Number*	*Name of Part and Description*	*Function*	*Mfr. and Designation*	*Drawing Or Spec. No.*
H-319	AAF # 6L72905-3	WASHER, Lock: Same as H-112.	Used in mtg guide pins on 25-contact connector. Used with C-149/ARN-6 and C-149A/ARN-6		
J-301	AAF # 2Z5531.2 ASO # R16-J-3102	JACK, Telephone: for 2 conductor 0.25" diam plug; 1-19/32" lg x 5/8" wd x 1-3/64" h overall; tropicalized; J4 contact arrangement; includes 1 flat washer, brass, nickel-plated; 1 lock washer, internal teeth; 1 hex nut, brass, nickel-plated, 5/8" across flats, 1/4" thk.	Phone jack for headsets when interphone is not to be used. Used with C-149/ARN-6 and C-149A/ARN-6	P. R. Mallory A2A	Fairchild C424-208, Bendix C226154-1 and Magnavox 187932-1
J-302	AAF # 2Z3082-73	CONNECTOR, Female contact: 25 round female contacts; circular base is 3-1/2" OD; 2-1/8" ID; 3/16" thk overall; phenolic mtg ring; 3 mtg holes recessed to fit ends of mtg posts, and two not quite equally spaced holes to fit guidepins; tropicalized; to mate with P-301.	To accept mating connector of control box. Used with C-149/ARN-6 and C-149A/ARN-6	Bendix Part No. C202870-1	Fairchild C424-D3 and Bendix C202870-1
M-301	AAF # 3F872J9 ASO # R16-M-2059-5	METER, Ammeter: DC; arbitrary markings, no scale readings; square phenolic flush mtg case, 1-3/4" square flange x 1-1/2" diam body x 1-5/16" d overall; 3% full scale accuracy D'Arsonval movement; 295 microamperes full scale current; 7 scale division marks on 90° arc; titanium white on black background; self contained; four mtg holes 1/8" diam 1-5/16" c to c; two solder lug terminals attached to screw posts; suppresses zero, 105-125 microamperes for first division, tropicalized, scale marked with the words "TUNE TO MAX", and arrow; pointer swings toward left with increasing current.	Tuning meter. Used with C-149/ARN-6 and C-149A/ARN 6	Bendix Part No. C222715 De Jur Ansco type FA-112	Fairchild C424-309, Bendix C222715 and De Jur Ansco type FA 112 and Magnavox 557805 1
O-301	AAF # 6L3404-40F ASO # R16-S-9827-50	NUT, Round: stainless steel; passivated # 4-40; 9/16" lg; 13/32" OD of central flange; body 3/16" diam one end, 9/32" diam other end, extending approx equally from flange.	Attaching part for change over push button in control box. Used with C-149/ARN-6 and C-149A/ARN-6	Bendix Part No. A241532	Fairchild B424-661, Bendix A241532 and Magnavox 108220-1
O-302	AAF # 2Z3407-6 ASO # R16-C -38474-250	CRANK: black enameled aluminum, with bakelite knob; 1-1/4" center distance shaft to knob; knob is 3/4" diam x 3/4" lg; for 1/4" shaft, with two # 6-32 setscrews.	Tuning crank. Used with C-149/ARN-6 and C-149A/ARN-6	Bendix Part No. AB8917-1	Fairchild B413-C13 and Bendix AB8917-1
O-303	AAF # 2Z8552-48	SLEEVE, Insulating: phenolic; 17/64" lg; 0.128" ID; 1/4" OD.	Spaces control switch from band switch. Used with C-149/ARN-6 and C-149A/ARN-6	Bendix Part No. A18699-26	Fairchild B424-531, Bendix A18699-26 and Magnavox 448185-1

O-304	AAF # 2Z8552-49	SLEEVE, Insulating: phenolic; 13/32" lg; 0.128" ID; 1/4" OD.	Spaces band switch from control box chassis. Used with C-149/ARN-6 and C-149A/ARN-6	Bendix Part No. A18699-25	Fairchild B424-225, Bendix A18699-25 and Magnavox 448184-1
O-305	AAF # 2Z7858-70 ASO # R42-R-2790	RING, Retainer: external; beryllium copper; 1/64" thk, to fit groove 3/16" shaft; has ears for mounting tool.	Retains detent arm. Used with C-149/ARN-6 and C-149A/ARN-6	Waldes-Kohinoor 51-18	Fairchild B424-669, Bendix HC848Y-188 and Magnavox 107838-1
P-301	AAF # 2Z3045-44 ASO # R16-R-2523-35	CONNECTOR, Male contact: 25 round male contacts; special type; circular phenolic mtg base for contacts is ring-shaped, 3-1/2" OD x 2-1/8" ID x 3/16" thk overall; no shell or body; 3 mtg holes 0.252" diam, not quite equally spaced, and two guide-pins; tropicalized; to mate with J-302.	To make connections to control box mtg. Used with C-149/ARN-6 and C-149A/ARN-6	Bendix Part No. C202882-1	Fairchild C424-C13, Bendix C202882-1 and Magnavox 187931-1
R-301	AAF # 3RC10BF223K ASO # R16-R-17310-165	RESISTOR, Fixed: composition; 22,000 ohms ±10%; 1/4 watt. Same as R-131.	Tuning indicator limiting. Used with C-149/ARN-6 and C-149A/ARN-6		
R-302	AAF # 3Z7470-1	RESISTOR, Variable: 3-sections designated R-302A, R-302B, R-302C, counting from shaft end, elements are composition; resistance as follows: R-302A—70,000 ohms ±30%; R-302B—10,000 ohms ±50%; R-302C—35,000 ohms ±30%; wattage rating not specified—less than 2 watts each section; 2 terminals per section; case 1-1/16" diam x 1-7/8" lg max; enclosed; shaft 5/8" lg x 1/4" diam; taper as follows: *Clockwise Rotation* — *Resistance, Ohms* R-302A / R-302B / R-302C 35% — 6,300 / 19 / 3,600 50% — 3,500 / 40 / 1,500 65% — 900 / 160 / 390 Shaft torque normal: mounting bushing 1/4" lg, 3/8"-32 thread; non-turn ears on circumference at 3 and 9 o'clock; special, two sections for bridged-T attenuator, third section for bias control.	Volume control. Used with C-149/ARN-6	Allen-Bradley Type JJJ No. 3020	Fairchild D424-362
	or AAF # 3Z7470-3 ASO # R16-P-5583-40-700	RESISTOR, Variable: composition: 3 section; R-302A—70,000 ohms ±30%; R-302B—10,000 ohms ±50%; R-302C—35,000 ohms ±30%; less than 2 watt each section; 2 solder lug term each section; enclosed metal case 1-1/16" diam x 1-7/8" lg; 1/4" diam shaft 5/8" lg FMS; ins cont arm; normal torque #3/8-32 x 1/4" lg mtg bushings; non-turn ears on circum at 3 and 9 o'clock. *Clockwise Rotation* — *Resistance, Ohms* R-302A / R-302B / R-302C 35% — 6,600 / 20 / 4,100 50% — 3,400 / 40 / 2,100 65% — 1,800 / 80 / 1,100	Volume control. Used with C-149A/ARN-6	Allen-Bradley Type JJJ No. 3020	Bendix L219544-1 and Magnavox 227832-1

TABLE OF REPLACEABLE PARTS (Continued)

MODEL: Radio Compass AN/ARN-6 · **MAJOR ASSEMBLY: Control Box C-149/ARN-6 and C-149A/ARN-6**

Reference Symbol	*Army Stock Number Navy Type Number British Ref. Number*	*Name of Part and Description*	*Function*	*Mfr. and Designation*	*Drawing Or Spec. No.*
R-303	AAF#3RC30BF131J ASO#R16-R -17262-16-23	RESISTOR, Fixed: composition; 130 ohms ±5%; 1 watt.	Fixed resistor volume control T-pad. Used with C-149/ARN-6 and C-149A/ARN-6	JAN type RC30BF131J	JAN-R-11
R-304	AAF#3RC30BF131J	RESISTOR, Fixed: composition; 130 ohms ±5%; 1 watt. Same as R-303.	Fixed resistor, volume control T-pad. Used with C-149/ARN-6 and C-149A/ARN-6		
R-305		(Reference number not assigned.)			
R-306	AAF#3Z7415-17 ASO-R16-P-6934-600	RESISTOR, Variable: wire wound; 15,000 ohms nominal each side of center; 40 milliamperes max in lowest resistance position, 20 milliamperes max in highest resistance position, based on duty cycle of one minute on, one minute off; 3 solder lug terminals; enclosed case is approx 1-5/8" diam, overall length behind mounting surface is 2-1/4" max; 13/16" lg metal shaft has 2 parallel flats milled from 1/4" diam, to thickness of 0.191", special taper—15,000 ohms at 6 degrees from center, 2,500 ohms at approx 30 degrees from center, 800 ohms at approx 55 degrees from center, and 300 ohms against stop at 85 degrees from center; contact arm insulated from case; shaft has spring return to center position; 1/4" lg mtg bushing, threaded 3/8"-32, with non-turn projection on 1/4" radius at about 7 o'clock; has special SPST switch wafer, S-304, normally closed, but opening if switch is turned in either direction; resistor also has function of double throw switch, as two symmetrical windings are insulated from each other, and brought out to separate terminals.	Loop L-R control. Used with C-149/ARN-6 and C-149A/ARN-6	Bendix Part No. L222716-1	Fairchild C424-045, Bendix L222716 -1 and Magnavox 227831-1
R-307	AAF#3RC10BF152K	RESISTOR, Fixed: composition; 1500 ohms ±10%, 1/4" watt.	Loop damping. Used with C-149/ARN-6	JAN type RC10BF152K	JAN-R-11
	or AAF#3RC30BF821J ASO#R16-R -17264-94-5	RESISTOR, Fixed: composition; 820 ohms ±5%; 1 watt.	Loop damping Used with C-149A/ARN-6	JAN type RC30BF821J	JAN-R-11
S-301	AAF#3Z9823-16 ASO#R17-S -25025-208	SWITCH, Sensitive: SPST, bakelite body; 1-1/2" x 7/16" x 15/32" excluding soldering lugs, with attached mtg bracket 1-15/16" overall, lg in direction transverse to switch body; switch without mtg bracket is Aero Elec Co #C04-1A; 4-6 oz operating pressure, applied to push-pin through base; momentary snap-action, normally open; 2 mtg holes in bracket; #29 drill (.136") spaced 1-9/16"; 2 solder lug terminals.	Switch for operation of control change-over relay. Used with C-149/ARN-6 and C-149A/ARN-6	Aero Elec type G04-1A	Fairchild B424-C25, Bendix C202883 -1 and Magnavox 167879-1

S-302		(Reference number not assigned—See S-306.)			
S-303	AAF # 3Z9903E-25 ASO # R17-S-25607-8	SWITCH SECTION, Rotary: laminated phenolic, grade XP-SR, natural, with coin-silver contacts; phenolic is coated with Dow-Corning Fluid # 200 moisture-proofing compound; total of 6 contact lugs; phenolic is 1/16" thk x 1-7/8" x 1-5/8"; 2 mtg holes, .128" diam, 1-9/16" c to c.	Band switch. Used with C-149/ARN-6 and C-149A/ARN-6	Oak Type H	Fairchild C424-224, Bendix C242861 and Magnavox 167880-1
S-304	ASO # R17-S -25606-475	SWITCH SECTION, Rotary: laminated phenolic, grade XP-SR, natural, with coin-silver contacts; phenolic is coated with Dow-Corning Fluid # 200 moisture-proofing compound; 1 dummy, 2 active contact lugs; phenolic disc is 5/64" thk x 1-7/8" diam, cut down to 25/32" radius around approx half of circumference; 2 mtg holes .128" diam, spaced 1-9/16" c to c. Included in Ref. No. R-306.	Resistor shorting, Loop L-R control. Used with C-149/ARN-6 and C-149A/ARN-6	Oak Type DH	Fairchild C424-757 and Bendix C218198
S-305	AAF # 3Z9826-13.1 ASO # R17-S-25604	SWITCH, Rotary: 4-position, spcl contact arrangement; 2 decks, one being ordinary sw-wafer, with total of 12 contacts, the other a C-H # 8030-K4 SPST snap-switch; overall dimensions back of panel; 1-7/8" lg x 1-1/2" x 1-3/8" d, with shaft projecting 1-1/16" from rear of panel, giving total 2-7/32" d; 1/4" shaft projecting 15/32" from 19/32" lg mtg bushing, which is threaded 3/8"-32.	"Off - Comp - Ant - Loop" switch. Used with C-149/ARN-6 and C-149A/ARN-6	Oak Type H	Fairchild C424-177, Bendix C218196 and Magnavox 167877-1
S-306	AAF # 3Z9863-42A ASO # R17-S-28254-50	SWITCH, Toggle: SPST; phenolic; tropicalized 2-7/32" lg x 41/64" wd x 1-9/64" h overall; single hole mtg type; bushing 15/32" lg x 15/32"-32 thd; 20 amps, 24v; supplied with internal teeth lock washer and two hex nuts 9/16" across flats x 3/32" thk; 2 solder lug type terminals.	CW-Voice switch. Used with C-149/ARN-6 and C-149A/ARN-6	AWS Type ST42A spec. C75.15 JAN-S-23	Bendix C218230-1 and Magnavox 167878-1
X-301	AAF # 2Z5991-69 ASO # R17-L-11443	LIGHT, Indicator: miniature bayonet or screw base; brass and phenolic body; approx 2-3/4" lg x 3/4" diam, excluding mounting bracket, switch, and terminals; mounting bracket has 2 mtg holes, # 30 dr spaced 2-3/4"; twist-cover varies brilliance by varying width of light-slit, and shuts off current at "dim" end of travel; furnished with lamp LM-37, but will accommodate other lamps of similar dimensions, either screw or bayonet base; can be relamped from front.	Receptacle and switch for dial illumination.	Bendix Part No. L202873-1	Fairchild B424-C39, Bendix L202873 -1 and Magnavox 108219-1

MODEL: Radio Compass AN/ARN-6 **MAJOR ASSEMBLY: Mounting MT-275/ARN-6**

401-499	AAF # 2Z6763-275	MOUNTING, Control unit: Army-Navy Mounting MT-275/ARN-6; p/o Radio Compass AN/ARN-6; has grommet, cable-clamp, and ring-shaped 25-contact connector; aluminum base, or chassis, is 8-1/4" lg x 4-7/8" wd x 23/32" d; with extension for grommet at one end; four mtg holes, # 25 dr on 3-5/8" x 7-1/4" centers; designed to receive Control Box C-149/ARN-6.	Control box mounting.	Bendix Part No. L200261-1	Fairchild D424-D1, Bendix L200261 -1 and Magnavox 707874

TABLE OF REPLACEABLE PARTS (Continued)

MODEL: Radio Compass AN/ARN-6 **MAJOR ASSEMBLY: Mounting MT-275/ARN-6**

Reference Symbol	*Army Stock Number Navy Type Number British Ref. Number*	*Name of Part and Description*	*Function*	*Mfr. and Designation*	*Drawing Or Spec. No.*
J-401	AAF # 2Z3082-73 ASO # R16-R-2523-30	CONNECTOR, receptacle: female; 25 round contacts; circular phenolic body for mtg contacts; 3-1/2" OD x 2-1/8" ID x 3/16" thk body; three 0.1718" diam holes on 3" mtg diam not equally spaced.	Mating part for P-301.	Bendix Part No. C202870-1	Bendix C202870-1 and Magnavox 187934-1

MODEL: Radio Compass AN/ARN-6 **MAJOR ASSEMBLY: Mounting MT-273 ( )/ARN-6 and MT-274 ( )/ARN-6**

501-599	AAF # 2Z6763-273	MOUNTING, Radio receiver: Army-Navy Mounting MT-273/ARN-6; p/o Radio Compass AN/ARN-6; consists of outer frame to accept receiver, female connector strip to make power and control connection to receiver, terminal board for external connections, and change-over relay for dual control, and is equipped with vibration mounts; outside dimensions 17-1/4" x 11-9/16" x 3-7/8" max, excluding the two clamp screws; 16 mtg holes, to clear #8-32 screw, arranged in groups of four, each group 1-15/16" sq, outermost hole of each square on 14-5/16" x 10-15/16" centers.	Receiver-mounting, dual control use.	Bendix Part No. OR200343-1	Fairchild E424-B10
501-599	AAF # 2Z6763-273	MOUNTING, Radio receiver: Army-Navy Mounting MT-273A/ARN-6; p/o Radio Compass AN/ARN-6; consists of outer frame to accept receiver, female connector strip to make power and control connection to receiver, terminal board for external connections, and changeover relay for dual control, and is equipped with vibration mounts; outside dimensions 17-1/4" x 11-9/16" x 3-7/8" max, excluding the two clamp screws; 16 mtg holes, to clear #8-32 screw, arranged in groups of four, each group 1-15/16" sq, outermost hole of each square on 14-5/16" x 10-15/16" centers.	Receiver-mounting, dual control use.	Bendix Part No. OR200343-1	Fairchild E424-B10
501-599	AAF # 2Z6763-273	MOUNTING, Radio receiver: Army-Navy Mounting MT-273B/ARN-6; p/o Radio Compass AN/ARN-6; consists of outer frame to accept receiver, female connector strip to make power and control connection to receiver, terminal board for external connections, and changeover relay for dual control, and is equipped with vibration mounts; outside dimensions 17-1/4" x 11-9/16" x 3-7/8" max, excluding the two clamp screws; 16 mtg holes, to clear 8-32 screw, arranged in groups of four, each group 1-15/16" sq, outermost hole of each square on 14-15/16" x 10-15/16" centers.	Receiver-mounting, dual control use.	Bendix Part No. OR200343-1	Bendix OR200343-1

501-599	AAF # 2Z6763-273	MOUNTING, Radio receiver: Army-Navy Mounting MT-273D/ARN-6; p/o Radio Compass AN/ARN-6; consists of outer frame to accept receiver, female connector strip to make power and control connection to receiver, terminal board for external connections, and changeover relay for dual control, and is equipped with vibration mounts; outside dimensions 17-1/4" x 11-9/16" x 3-7/8" max, excluding the two clamp screws; 16 mtg holes, to clear 8-32 screws, arranged in groups of four, each group 1-15/16" sq, outermost hole of each square on 14-5/16" x 10-15/16" centers.	Receiver-mounting dual control use	Bendix Part No. OR200343-2	AAF # 50F13903
501-599	AAF # 2Z6763-273	MOUNTING, Radio receiver: Army-Navy Mounting MT-273E/ARN-6; p/o Radio Compass AN/ARN-6; consists of outer frame to accept receiver, female connector strip to make power and control connection to receiver, terminal board for external connections, and changeover relay for dual controls, and is equipped with vibration mounts; outside dimensions 17-1/4" x 11-9/16" x 3-7/8" max, excluding the two clamp screws; 16 mtg holes, to clear 8-32 screws, arranged in groups of four, each group 1-15/16" sq, outermost hole of each square on 14- 5/16" x 10-15/16" centers.	Receiver-mounting dual control use	Bendix Part No. OR200343-4 and Magnavox Part No. 707870	AAF # 52F12984
501-599	AAF # 2Z6763-274	MOUNTING, Radio receiver: Army-Navy Mounting MT-274/ARN-6; p/o Radio Compass AN/ARN-6; consists of outer frame to accept receiver, female connector strip to make power and control connections to receiver, terminal board for external connections, and is equipped with vibration mounts; outside dimensions 17-1/4" x 11-9/16" x 3-7/8" max, excluding the two clamp screws; 16 mtg holes, to clear #8-32 screw, arranged in groups of four, each group 1-15/16" sq, outermost hole of each square on 14-5/16" x 10-15/16" centers.	Receiver-mounting, single control use.	Bendix Part No. OR200263-1	Fairchild E424-AF2 and Magnavox 707869
501-599	AAF # 2Z6763-274	MOUNTING, Radio receiver: Army-Navy Mounting MT-274A/ARN-6; p/o Radio Compass AN/ARN-6; consists of outer frame to accept receiver, female connector strip to make power and control connections to receiver, terminal board for external connections, and is equipped with vibration mounts; outside dimensions 17-1/4" x 11-9/16" x 3-7/8" max, excluding the two clamp screws; 16 mtg holes, to clear #8-32 screw, arranged in groups of four, each group 1-15/16" sq, outermost hole of each square on 14-5/16" x 10-15/16" centers.	Receiver-mounting, single control use.	Bendix Part No. OR200263-1	Bendix OR200263-1
501-599	AAF # 2Z6763-274	MOUNTING, Radio receiver: Army-Navy Mounting MT-274B/ARN-6; p/o Radio Compass AN/ARN-6; consists of outer frame to accept receiver, female connector strip to make power and control connections to receiver, terminal board for external connections, and is equipped with vibration mounts; outside dimensions 17-1/4" x 11-9/16" x 3-7/8" max, excluding the two clamp screws; 16 mtg holes, to clear #8-32 screw, arranged in groups of four, each group 1-15/16" sq, outermost hole of each square on 14-5/16" x 10-15/16" centers.	Receiver-mounting single control use	Bendix Part No. OR200263-3	AAF # 50F13904

TABLE OF REPLACEABLE PARTS (Continued)

MODEL: Radio Compass AN/ARN-6 **MAJOR ASSEMBLY: Mounting MT-273 ( )/ARN-6 and MT-274 ( )/ARN-6**

Reference Symbol	*Army Stock Number Navy Type Number British Ref. Number*	*Name of Part and Description*	*Function*	*Mfr. and Designation*	*Drawing Or Spec. No.*
501-599	AAF # 2Z6763-274	MOUNTING, Radio receiver: Army-Navy Mounting MT-274C/ARN-6; consists of outer frame to accept receiver, female connector strip to make power and control connections to receiver, terminal board for external connections, and is equipped with vibration mounts; outside dimensions 17-1/4" x 11-9/16" x 3-7/8" max, excluding the two clamp screws; 16 mtg holes, to clear #8-32 screw, arranged in groups of four, each group 1-15/16" sq, outermost hole of each square on 14-5/16" x 10-15/16" centers.	Receiver-mounting single control use	Bendix Part No. OR200263-4	AAF # 52F12985
C-501	AAF # 3DA100-908 ASO # R16-C-11299-26	CAPACITOR, Fixed: paper; 100,000 mmf; 300 vdcw. Same as C-129.	Spark suppressor for coil of K-501. Used with MT-273/ARN-6, MT-273A/ARN-6, MT-273B/ARN-6, MT-273D/ARN-6 and MT-273E/ARN-6		
C-502	AAF # 3DA100-908 ASO # R16-C-1299-26	CAPACITOR, Fixed: paper; 100,000 mmf 30 vdcw. Same as C-129.	Spark suppressor for coil of K-501. Used with MT-273B/ARN-6, MT-273D/ARN-6 and MT-273E/ARN-6		
E-501	AAF # 2Z9440-167 ASO # R16-M-576451	BOARD, terminal: 63 screw term, some equipped w/spade term lugs; molded bakelite; max 55/64" thk x 11-29/32" lg x 4-13/16" wd w/cutout 5-5/16" x 2-1/2" wd at one end; barriers molded between term; furnished w/resistors R-501 and R-502, relay K-501 and capacitors C-501 and C-502; six 0.171" diam holes, 4 on 4-3/8" x 11-15/32" center, 2 others spaced 2-11/16" c to c and 6-15/32" from center line of holes at solid end.	Main junction board for interconnections when dual control is used. Used with MT-273/ARN-6, MT-273A/ARN-6, MT-273B/ARN-6, MT-273D/ARN-6 and MT-273E/ARN-6	Bendix Part No. N203616-1	Bendix N203616-1, Fairchild D424-AK2 and Magnavox 207908-2
E-502	AAF # 2Z9440-168 ASO # R16-M-4764-50	BOARD, terminal: 63 steel term, #6-32 thd one end, solder lug other end; molded bakelite; 11-29/32" lg x 4-13/16" wd x 55/64" thk w/cutout 5-5/16" x 2-1/2" one end; six 11/64" diam mtg holes w/4 spaced 4-3/8" x 11-15/32" c to c, other two spaced 2-11/16" c to c 6-15/32" from end.	Main junction board for interconnections when single remote control is used. Used with MT-274/ARN-6, MT-274A/ARN-6, MT-274B/ARN-6 and MT-274C/ARN-6	Bendix Part No. L242812	Bendix L242812, Fairchild D424-AL2 and Magnavox 207908-2

E-503	AAF # 3Z770-4-19 ASO # R16-B-6540-730	BOARD, terminal: 4 solder post term spaced 2-1/16" apart in 2 rows of 2, 21/64" between rows; phenolic: 3-3/16" lg x 11/16" wd x 1/16" thk; two 0.166" diam holes on 2-11/16" mtg/c.	Mtg for C-501 and C-502. Used with MT-273B ARN-6, MT-273D ARN-6 and MT-273E ARN-6	Bendix Part No. A203611-1	Bendix A203611-1
H-501	AAF # 6L505-32-8 ASO # R16-N-2157	NUT, hexagon: brass, nickel pl; # 6-32; 1/2" across flats, 3/32" thk.	For guide pin bushing on receptacle. Used with MT-273 ARN-6, MT-273A ARN-6, MT-273B ARN-6, MT-273D ARN-6, MT-273E ARN-6, MT-274 ARN-6, MT-274A ARN-6, MT-274B ARN-6 and MT-274C ARN-6	JAN HSN775B-9	Bendix HSN775B-9 Fairchild B424-283 and Magnavox 105120-226
H-502	AAF # 2Z7093-145	PLATE, retainer: aluminum; 6-3/8" lg x 1/2" wd x 1/8" thk; 3 # 4-40 tapped holes on ctr line spaced 1-7/8" c to c.	Retains 22 contact receptacles. Used with MT-273/ARN-6, MT-273A/ARN-6, MT-273B ARN-6, MT-273D/ARN-6, MT-273E/ARN-6, MT-274/ARN-6, MT-274A/ARN-6, MT-274B/ARN-6 and MT-274C/ARN-6	Bendix Part No. C227898	Bendix C227898 Fairchild B424-864 and Magnavox 638199-2
H-503	AAF # 6L34024	WASHER, flat: aluminum; 0.257" ID; 1-1/2" OD; 0.064" thk.	Motion-limiting washers on vibration mounts. Used with MT-273/ARN-6, MT-273A/ARN-6 and MT-274/ARN-6		Fairchild B424-265
J-501	AAF # 2Z308272 ASO # R16-R-2523-40	CONNECTOR, receptacle: female; 22 round cont; spcl type 9-11/16" lg x 5/8" wd x 5/64" thk less cont; phenolic mtg strip two 0.316" diam mtg holes spaced on 9" mtg/c.	To accept mating connector of receiver. Used with MT-273/ARN-6, MT-273A/ARN-6, MT-273B/ARN-6, MT-273D/ARN-6, MT-273E/ARN-6, MT-274/ARN-6, MT-274A/ARN-6, MT-274B/ARN-6 and MT-274C/ARN-6	Bendix Part No. C202808-1	Bendix C202808-1 Fairchild C424-AK4 and Magnavox 207909-1
K-501	AAF # 2Z7597-9 ASO # R17-5884-311	RELAY, rotary: 16 pole, 2 throw on 8 sw sect w/one SPST aux sw; coin silver cont; single wnd coil, 26.5v DC; solder lug term on cont, wire leads on coil; 4-5/8" lg x 3-1/16" wd x 1-47/64" h; four 5/32" diam holes on 1-15/16" x 2-11/16" mtg/c.	Control changeover. Used with MT-273/ARN-6, MT-273A/ARN-6, MT-273B/ARN-6, MT-273D/ARN-6 and MT-273E/ARN-6	Leland 5ESR-25	Bendix L222828 Fairchild D424-288 and Magnavox 167869-1

TABLE OF REPLACEABLE PARTS (Continued)

MODEL: Radio Compass AN/ARN-6 **MAJOR ASSEMBLY: Mounting MT-273 ( )/ARN-6 and MT-274 ( )/ARN-6**

Reference Symbol	*Army Stock Number Navy Type Number British Ref. Number*	*Name of Part and Description*	*Function*	*Mfr. and Designation*	*Drawing Or Spec. No.*
O-501	AAF # 2Z1409-86 ASO # R16-B-14821	BUSHING, threaded: brass, chromium pl; hex head, 1/2" across flats; 7/16" lg o/a; 5/16"-32 x 9/32" lg; ID stepped—.218" diam and .230" diam; shoulder 5/64" lg x 23/64" diam.	Receives alignment pins on receiver. Used with MT-273/ARN-6, MT-273A/ARN-6, MT-273B/ARN-6, MT-273D/ARN-6, MT-273E/ARN-6, MT-274/ARN-6, MT-274A/ARN-6, MT-274B/ARN-6 and MT-274C/ARN-6	Bendix Part No. A240142	Bendix A240142 Fairchild B242-275 and Magnavox 117982-2
O-502A	AAF # 2Z6820.216 ASO # R16-M-4992-20D	MOUNT, vibration: c/o 2 mounts assembled on plate 11/3-8" lg x 2-3/8" w x 1-3/8" h o/a; mts are sq; 10 lb load rating; 2-3/8" sq x 1-3/8" h; rubber cushion; steel ctr sleeve w/1/4"-20 thd tapped 3/8" d; four 0.196" diam mtg holes spaced 1-15/16" c to c.	Shockmount, rear. Used with MT-273B/ARN-6, MT-273C/ARN-6 and MT-274B/ARN-6	Robinson Aviation	Bendix L240562
O-502B	AAF # 2Z6820.215 ASO # R16-M-4992-201	MOUNT, vibration: c/o 2 mounts assembled on plate 11-3/8" lg x 2-3/8" wd x 1-3/8" h o/a; mts are sq; 12 lb load rating; 2-3/8" sq x 1-3/8" h; rubber cushion; steel ctr sleeve w/1/4"-20 thd tapped 3/8" d; four 0.196" diam mtg holes spaced 1-15/16" c to c.	Shockmount, front. Used with MT-273B/ARN-6, MT-273C/ARN-6 and MT-274B/ARN-6	Robinson Aviation	Bendix L240562-1
O-502C		MOUNT, vibration: c/o 2 mounts assembled on plate 11-3/8" lg x 2-3/8" w x 1-3/8" h o/a; mts are sq; 12-1/2 lb load rating; 2-3/8" sq x 1-3/8" h; met-l-flex cushion; steel ctr sleeve w/1/4"-20 thd tapped 5/16" d; four 0.196" diam mtg holes spaced 1-15/16" c to c.	Shockmount, front and rear. Used with MT-273E/ARN-6 and MT-274C/ARN-6	Robinson Aviation type 879-1	Bendix L240587-1 and Magnavox 638875-1
R-501	AAF # 3Z6004-49 ASO # R16-R-18616-825	RESISTOR, Fixed: ww; 40 ohms p/m 10%; 4w; 3-1/16" lg x 11/16" w x 13/32" h; element molded in phenolic; 2 solder lug term on side; integral mtg bkt w/two 5/32" diam holes spaced on 2-1/2" mtg/c.	Pilot light dropping. Used with MT-273/ARN-6, MT-273A/ARN-6, MT-273B/ARN-6, MT-273D/ARN-6, MT-273E/ARN-6, MT-274/ARN-6, MT-274A/ARN-6, MT-274B/ARN-6 and MT-274C/ARN-6	IRC Type MW-2	Bendix C220547-1 Fairchild C424-725 and Magnavox 247830-1
R-502	AAF3Z6003A1-3 ASO # R16-R-18615-7-125	RESISTOR, Fixed: ww; must meet spec JAN-R-26 for RW21G except for mtg bkt; 31 ohms p/m 5%; 22w at 275°C; 2" lg x 1-3/16" w x 3/8" thk; vitreous E; 2 solder lug term; integral bkt w/two 0.136" diam holes on 2-11/16" mtg/c.	Current limiting for K-501 on holding period. Used with MT-273B/ARN-6, MT-273D/ARN-6 and MT-273E/ARN-6	Bendix Part No. C220117-1 ITE type 200 oval w/spcl bkt	Bendix C220117-1 and Magnavox 247854-1

MODEL: Radio Compass AN/ARN-6 **MAJOR ASSEMBLY: Coupling Unit CU-65/ARN-6**

Series 601-699	AAF # 2C472-65	COUPLING UNIT, antenna: Army-Navy Coupling Unit CU-65/ARN-6; p/o Radio Compass AN/ARN-6; consists of Sig C socket SO-239 and streamline phenolic housing mounted on circular base, with internal parts, gaskets, and mounting facilities; designed to join a nondirectional aircraft antenna to a shielded lead, and serve also as a lead-through; 5" long (housing) x 2-1/2" wd (base diam) x approx 2-1/2" h overall; mounts by 4 screws #6-32 on 15/16" x 1-5/8" ctrs.	Lead-in terminal for nondirectional antenna.	Fairchild	Fairchild D424-AG2 and Magnavox 707878
A-601	AAF # 2Z5091-24 ASO # R16-H-8266	HOUSING, Streamline: for antenna Coupling Unit CU-65/ARN-6; yellow phenolic; 5" lg x 1-1/4" wd x 1-1/4" h, sides taper in toward ends, top rounded to 4-1/4" rad; 2 mtg holes, #17 dr, spaced 1-7/8" along centerline; marked FRONT with arrow on top at one end.	Coupling unit cover.		Fairchild D424-836 Bendix L228972 and Magnavox 448186-1
J-601	AAF # 2Z8799-239 ASO # R16-R-2505	CONNECTOR, Female contact: Sig C socket SO-239. Same as J-101.	Electrical connection	Ucinite 118044	Ucinite 118044 and Magnavox 187815-1
O-601	AAF # 2Z4868.530	GASKET, Housing: neoprene; three holes; shape is pointed oval, 5" lg x 1-1/4" w x 1/8" thk; part of Coupling Unit CU-65/ARN-6.	Coupling unit cover.		Fairchild B424-843
O-602	AAF # 2Z4868.531	GASKET, Mounting: neoprene, seven holes; 2-1/2" OD x 1-1/16" thk; part of Coupling Unit CU-65/ARN-6.	Mounting seal, coupling unit to airplane skin.		Fairchild B424-839

MODEL: Radio Compass AN/ARN-6 **MAJOR ASSEMBLY: Coupling Unit CU-65/ARN-6**

Series 611-699		COUPLING UNIT, antenna: Army-Navy Coupling Unit CU-65A/ARN-6; p/o Radio Compass AN/ARN-6; consists of Sig C Socket SO-239 and streamline phenolic housing mounted on circular base, with internal part, gaskets and mounting facilities; designed to join a nondirectional aircraft antenna to a shielded lead, and serve also as a lead through; 5-1/4" long (housing) x 2-1/2" wide (base diam) x approx 2-3/4" h overall; mounts by 4 screws #6-32 on 15/16" x 1-5/8" ctrs.	Lead-in terminal for Non-Directional antenna		Magnavox 708054
A-611		HOUSING, Streamline: for antenna Coupling Unit CU-65A/ARN-6; yellow phenolic; 5-1/4" lg x 1-1/2" wd x 1-1/2" h, sides taper in toward ends, top rounded to 4-1/2" rad; 2 mtg holes, #17 dr, spaced 1-7/8" along centerline; marked FRONT with arrow on top at one end.	Coupling Unit Cover		Magnavox 448444
J-611	AAF # 2Z8799-239 ASO # R16-R-2505	CONNECTOR, Female Contact: Sig C Socket ST-239. Same as J-101.	Electrical Connection		Magnavox 187815-1
O-611		GASKET, Housing: three holes; shape is pointed oval, 5-1/4" lg x 1-1/2" wd x 1/8" thk; part of Coupling Unit CU-65A/ARN-6.	Coupling Unit Cover		Magnavox 448446
O-612	AAF # 2Z2468.531	GASKET, Mounting: neoprene, seven holes; 2-1/2" OD x 1-1/16" thk; part of Coupling Unit CU-65A/ARN-6.	Mounting Seal, Coupling Unit to airplane skin		Magnavox 448413

	AAF # 2A1991-313 (loop, less housing); AAF # 2A790-141 (housing)	ANTENNA: Army-Navy Loop AS-313/ARN-6, AS-313A/ARN-6 or AS-313B/ARN-6, with housing CW-141/ARN-8; loop type for radio compass reception; iron core, rotated by motor drive, with Autosyn (synchro) transmitter and mechanical compensator for remote indicator readings, glass dome over loop proper, hermetically sealed; housing is streamline, not over 17" x 5-1/2" x 6-1/8", and when assembled to its loop mechism extends slightly more than 4-1/2" beyond housing; mounting flange is approximately eliptical, with holes for ten #10 mtg screws; four similar additional holes required, unless loop is not used; designed to operate through Cord CG-131 (132, 133, or 134)/ARN-6 in conjunction with Radio Compass Unit R-101/ARN-6.	Directional antenna.	Bendix Part No. N212254 and Borg 80550 (loop less housing) Bendix N222579 (housing) and Magnavox 707876	Kearfott N212254, Borg 80550, Magnavox 707881 (loop, less (housing); Bendix N222579 and Magnavox 707876 (housing)
A-701	AAF # 2Z7093-134	PLATE, mounting: aluminum irregular shape; 6-1/2" lg x 3-1/8" wd x 0.156" thk; four 0.201" diam holes on 2.687" x 2.687" x 2.812" mtg/c; total 16 holes.	Motor and gear train support. Used with AS-313A/ARN-6 and AS-313B/ARN-6	Kearfott # W-5984 Borg 70878	Kearfott # W-5984, Borg 70878 and Magnavox 639022-4
A-702	AAF # 2A3393A.1-18	SUPPORT, antenna: aluminum; 5.19" lg x 3-9/16" wd x 2.469" h o/a; four 0.257" diam holes on 3/16" x 4.63" mtg/c.	Loop ant support. Used with AS-313A/ARN-6 and AS-313B/ARN-6	Kearfott # W-1533 Borg 70876	Kearfott # W-1533, Borg 70876 and Magnavox 667858-1
A-703	AAF # 2A1382-2 ASO # R16-R-1115	LOOP SUB-ASSEMBLY: dome, c/o clear glass dome, frame and mtg base; 9-5/16" lg, 5-3/8" w, 9.196" h approx; elliptical shape pl with ten 0.196" diam mtg holes.	Hermetical seal of loop AS-313A/ARN-6 and AS-313B/ARN-6	Kearfott # W-5995 Borg 80571	Kearfott # W-5995, Borg 80571 and Magnavox 639020-1
A-704	AAF # 2Z3352.176 ASO # R16-C -37369-500	COVER: aluminum, black E; 5.218" lg x 4-1/4" w x 1-3/8" h o/a; four 0.120" diam holes on 7/8" x 2-25/32" mtg/c one end of cover, one 0.149" x 0.180" hole other end of cover; stencilled w/instruction note & AN plug No.	Loop adj case. Used with AS-313A/ARN-6 and AS-313B/ARN-6	Kearfott # W-2292 Borg 70882	Kearfott # W-2292, Borg 70882 and Magnavox 639014-1
B-701	ASO # R17-M-4476-5 AAF # 3H3000-86	MOTOR, AC: capacitor start type; torque .875 oz in 2750 rpm; closed frame; 60°C temperature rise; 0.120" diam shaft 0.469" lg, #3-48 thd for distance of 0.156" 1-11/16" diam x 1.687" lg o/a; shaft protruding .469" from frame; two phase 93v, 68v, AC 100 cycle; fixed mtg base; three #4-40 tapped holes 90° apart on 1.812" diam.	Loop drive for AS-313A/ARN-6 and AS-313B/ARN-6	Kollsman Type #937B-0240 Kearfott # W-6818 Borg 70872	Kearfott # R-107, Borg 70872 and Magnavox 507818-1
B-702	AAF # 3H3000S-111 ASO # R17-M -3459-102	MOTOR, self-synchronous: 22c, ac, 100 cyc, single ph; 1.437" diam, 1-21/32" lg; closed frame; shaft .1203" diam extending 1/2" from frame; 6 ins wire leads 12" lg.	Autosyn transmitter. Used with AS-313A/ARN-6 and AS-313B/ARN-6	Pioneer # AY-201-8A or AY-201-8B Borg 61362	Kearfott # V-4175-10 Borg 61362 and Magnavox 537843-1
E-701	AAF # 2A64-313-A ASO # R16-L-5485	ANTENNA: loop type; c/o shaft, iron cores on which are wnd 3 wnd; 3-3/4" diam x 8-7/8" lg; shaft mtd; rotating; motor driven through gear train by motor B-701; 100 to 1750 kc.	Loop antenna. Used with AS-313A/ARN-6 and AS-313B/ARN-6	Kearfott # W-1660-1 Borg 80570	Kearfott # W-1660-1, Borg 80570 and Magnavox 702904-1

TABLE OF REPLACEABLE PARTS (Continued)

MODEL: Radio Compass AN/ARN-6 **MAJOR ASSEMBLY: Loop AS-313/ARN-6, AS-313A/ARN-6, and AS-313B/ARN-6**

Reference Symbol	*Army Stock Number Navy Type Number British Ref. Number*	*Name of Part and Description*	*Function*	*Mfr. and Designation or JAN Type*	*Drawing Or Spec. No.*
E-702	AAF # 2A3208-2 ASO # R16-S-3890-925	SHIELD, antenna: molded of electrostatic shield cloth .009" copper wire; 3.62" lg x 2-7/8" wd x 5.28" h; shield band w/three 0.125" diam holes on base.	Loop shield. Used with AS-313A/ARN-6 and AS-313B/ARN-6	Kearfott # V-1920 Borg 70869	Kearfott # V-1920, Borg 70869 and Magnavox 639024-1
E-703	AAF # 2Z7258.68	POINTER, indicator: .025" aluminum, dull black E; irregular shape; .025" thk; two 0.120" w slots spaced 41-1/2" deg apart at 2.664" rad on mtg feet.	Indicator pointer. Used with AS-313A/ARN-6 and AS-313B/ARN-6	Kearfott # V-1561 Borg 61363	Kearfott # V-1561, Borg 61363 and Magnavox 639035-1
E-704	AAF # 3H505-43 ASO # R16-B-12475	BRUSH ASSEMBLY: electrical contact: c/o 3 silver and copper brushes riveted to a natural bakelite holder; 1-1/16" x 1-9/32" x .125" o/a; two 0.149" diam holes on 3/4" mtg/c.	Electrical connection to loop of AS-313A/ARN-6 and AS-313B/ARN-6	Kearfott # U-1549 Borg 56223	Kearfott # U-1549, Borg 56223 and Magnavox 639012-1
E-705	ASO # R16-B-6540-645	BOARD, terminal: HS feed-thru term; 3 solder lug term spaced 120° apart on 0.530" diam; CRS w/glass fused term; 0.952" diam; mts by soldering into case.	Feed through. Used with AS-313A/ARN-6 and AS-313B/ARN-6	Cinti Elec. Prod. Co. # 603-FP Borg 56260	Kearfott # U-4473, Borg 56260 and Magnavox 208056-1
E-706	ASO # R16-B-6540-660	BOARD, terminal: HS feed-thru term; 6 solder lug term spaced 60° apart on 17/32" diam, w/1 term in ctr; CRS w/glass fused term; 61/64" diam; mts by soldering into case.	Feed through. Used with AS-313A/ARN-6 and AS-313B/ARN-6	Cinti Elec. Prod. Co. # 707-TH Borg 56261	Kearfott # U-4474, Borg 56261 and Magnavox 208057-1
H-701	ASO # R42-P-1927	PIN, taper: steel; # 4/0 standard pin; .109" largest diam 11/16" lg.	Used with AS-313A/ARN-6 and AS-313B/ARN-6	Kearfott # U-1744	Kearfott # U-1744, Borg AN385-40-6 and Magnavox 108216-1
H-702		WASHER, flat: brass; round, .092" ID, 7/32" OD, .018" thk.	Used with AS-313A/ARN-6 and AS-313B/ARN-6	Kearfott # U-7233	Kearfott # U-7233, Magnavox 108249-1
H-703	AAF # 2Z1239.180	BRACKET: autosyn mtg clamp; L-shaped: CRS; 1/4" wd x 0.266" lg one leg, 0.228" lg other leg w/0.104" diam hole.	Autosyn mounting clamp. Used with AS-313B/ARN-6 only	Kearfott # U-7348 Borg 56233	Kearfott # U-7348, Borg 56233 and Magnavox 639011-1
H-704	ASO # R43-KER-U -1748	WASHER, flat: brass; round, .101" ID, 1/4" OD, .020".	Used with AS-313A/ARN-6 and AS-313B/ARN-6	Kearfott # U-1748	Kearfott # U-1748, Magnavox 108246-1
H-705	ASO # R43-N-94501	NUT, Lock: elastic stop nut; brass; # 3-48; 9/64" h; thd 5/64" d; 1/4" wd across flats.	Used with AS-313A/ARN-6 and AS-313B/ARN-6	Kearfott # U-703	Kearfott # U-703 Borg 56155 and Magnavox 108239-1

H-706		SCREW, set: flute drive; headless; steel cad pl; #6-32 x 3/16" lg, cup point.	Used with AS-313A/ARN-6	Kearfott #U-1267	Kearfott #U-1267
	or	SCREW, set: hex drive; headless; hardened steel; #4-40 5/32" lg, flat point.	Used with AS-313B/ARN-6	Kearfott #U-5996 Borg P6F4-2-1/2 HB	Kearfott #U-5996 Borg P6F4-2-1/2 HB and Magnavox 108217-1
H-707	AAF #6L58026-27	WASHER, flat: steel; round, .376" ID, 3/4" OD, .187" thk.	Used with AS-313A/ARN-6 and AS-313B/ARN-6	Kearfott #U-1405 Borg 56164	Kearfott #U-1405, Borg 56164 and Magnavox 118294-1
H-708		SCREW, machine: 6 flute drive; FH, steel, cad pl; 1/4"-28 thd, class 2; 3/4" lg.	Used with AS-313A/ARN-6 and ZAS-313B/ARN-6	Kearfott #U-1726	Kearfott #U-1726, Magnavox 108241-1
H-709		WASHER, lock: steel, cad pl; round, 0.269" ID, 0.315" OD, 5/64" thk, split ring type.	Used with AS-313A/ARN-6 and AS-313B/ARN-6	Kearfott #U-1755 Borg 56371	Kearfott #U-1755, Borg 56371 and Magnavox 105134-507
H-710	ASO #R43-KER-U -4611	RIVET, solid: CRS; RH; 0.046" diam x 5/16" lg.	Used with AS-313A/ARN-6 and AS-313B/ARN-6	Kearfott #U-4611 Borg 56262	Kearfott #U-4611, Borg 56262 and Magnavox 108242-1
H-711	AAF #6L4718.1 ASO #R16-S-2189-501	SCREW, adjustment: brass half hard, dull nickel pl; cam adj; #8-56 int thk tapped 5/8" d; 1/2" OD head x .075" thk.	Used with AS-313A/ARN-6 and AS-313B/ARN-6	Kearfott #U-1514 Borg 56267	Kearfott #U-1514, Borg 56267 and Magnavox 118293-1
H-712	ASO #R43-W -280614-50	WASHER, spring: SS; round, 9/32" ID, 1/2" OD, .012" thk; concave shape 3/32" h.	Used with AS-313A/ARN-6 and AS-313B/ARN-6	Kearfott #U-1722 Borg 56265	Kearfott #U-1722, Borg 56265 and Magnavox 108248-1
H-713		WASHER, flat: SS; round, 0.278" ID, 13/32" OD, .015" thk.	Used with AS-313A/ARN-6 and AS-313B/ARN-6	Kearfott #U-1734 Borg 56269	Kearfott #U-1734, Borg 56269 and Magnavox 108247-1
H-714	AAF #6L4718 ASO #R16-N -1923-25	SCREW, adjustment: brass half hard, dull nickel pl; cam adjustment; #8-56 int thd tapped 3/8" d; 1/2" OD head x .075" thk; head stamped "ZERO ADJUST".	Used with AS-313A/ARN-6 and AS-313B/ARN-6	Kearfott #U-2741	Kearfott #U-2741, Borg 56266 and Magnavox 118292-1
H-715		SCREW, machine: slot drive, bind H; SS; #6-32 class 2; 5/16" lg.	Used with AS-313A/ARN-6 and AS-313B/ARN-6	Kearfott #U-1762	Kearfott #U-1762, Magnavox 107832-4
H-716		WASHER, lock: SS; round, 0.151" ID, 0.2135" OD, 1/32" thk; split ring type.	Used with AS-313A/ARN-6	Kearfott #U-1763	Kearfott #U-1763, Magnavox 105132-3

TABLE OF REPLACEABLE PARTS (Continued)

MODEL: Radio Compass AN/ARN-6 **MAJOR ASSEMBLY: Loop AS-313/ARN-6, AS-313A/ARN-6, and AS-313B/ARN-6**

Reference Symbol	*Army Stock Number Navy Type Number British Ref. Number*	*Name of Part and Description*	*Function*	*Mfr. and Designation or JAN Type*	*Drawing Or Spec. No.*
H-717	ASO # R42-P -11218-505	PIN, grooved: steel, cad pl; 1/16" diam x 9/32" lg.	Used with AS-313A/ARN-6 and AS-313B/ARN-6	Groov-Pin Corp. Type 1 Borg P66-4-4-1/2 SC	Kearfott # U-1178, Borg P66-4-4-1/2 SC and Magnavox 108240-1
H-718	ASO # R16-W-1016	WASHER, cup: brass; round, 0.495" OD x 0.188" ID x 0.0126" thk; 3/8" diam extension to 0.023" thk.	Used with AS-313A/ARN-6 and AS-313B/ARN-6	Kearfott # U-1571 Borg 56186	Kearfott # U-1571, Borg 56186 and Magnavox 108245-1
J-701	ASO # R17-R-1480	CONNECTOR, receptacle: 3 round male cont; 1-3/16" lg x 23/32" diam; three 10 amp cont; cylindrical aluminum alloy shell, sandblast; melamine insert; 1-3/16" sq fl w/four .120" diam holes spaced on 29/32" mtg/c; 7/8" 20 thd coupling.	Used with AS-313A/ARN-6 and AS-313B/ARN-6	AN type # AN-3102-14S-1P Borg 56276	Kearfott # U-1741, Borg 56276 and Magnavox 187935-1
J-702	ASO # R17-R-1490-3	CONNECTOR, receptacle: 7 round male cont; 1-3/16" lg x 27/32" diam; seven 10 amp cont, cylindrical aluminum alloy shell, sandblast; melamine insert; 1-9/32" sq fl w/four .120" diam holes spaced on 13/32" mtg/c; 1" 20 thd coupling.	Used with AS-313A/ARN-6 and AS-313B/ARN-6	AN type # AN-3102-16S-1P Borg 56277	Kearfott # U-1742, Borg 56277 and Magnavox 187810-1
N-701	AAF # 2Z8076-11	SCALE: for orienting antenna: round, natural color nylon 3.734" OD x 2-5/8" ID, 1-3/16" d; two scales from 0 to 360 degrees with 5° lower or black scale from 0 to 360 degrees; 6 holes .096" diam elongated 2° equally spaced on 5" rad.	Azimuth scale. Used with AS-313A/ARN-6 and AS-313B/ARN-6	Kearfott # U-1653 Borg 61354	Kearfott # U-1653, Borg 61354 and Magnavox 157865-1
N-702	AAF # 2Z7093-133 ASO # R16-P -2729-200	PLATE, instruction: cam strip caution plate; aluminum; 3-1/4" OD x 0.016" thk; instructions stencilled; four 0.120" diam holes spaced 90° apart on 0.531" mtg/rad.	Caution notice. Used with AS-313A/ARN-6 and AS-313B/ARN-6	Kearfott # U-2730 Borg 56281	Kearfott # U-2730, Borg 56281 and Magnavox 639021-1
N-703	AAF # 2Z3718.118 ASO # R16-D-2379-500	DIAL: compensator screw adj; alum; scale marked every 30° w/2 sets of numerals, inner numerals red, outer numerals black, white background, 2.230" diam x 0.016" thk; 17/32" diam hole in ctr; four 0.147" diam holes spaced 90° apart on 0.937" mtg/rad.	Correction dial. Used with AS-313A/ARN-6 and AS-313B/ARN-6	Kearfott # U-1827 Borg 56278	Kearfott # U-1827, Borg 56278 and Magnavox 157866-1
O-701	ASO # R77-B-111 -01210-0000	BEARING, ball: single row; radial; plain; light duty; 0.4724" bore, 1.1024" OD, 0.315" wd; eight 3/16" diam balls; packed in Univis P-38 oil; std fit; ABEC # 1 tol.	Used with AS-313A/ARN-6 and AS-313B/ARN-6	New Departure type 3L01-X-1228 (W) P-25	Kearfott # U-1546, Borg 56169 and Magnavox 108214-1
O-702	AAF # 2Z7526-15 ASO # R16-G-2836	GEAR ASSEMBLY: c/o two gears U5979 and U1573 in housing; irregular shape; four 0.120" diam holes irregularly spaced for mtg.	Used with AS-313A/ARN-6 and AS-313B/ARN-6	Kearfott # Y-5993-1 Borg 80553	Kearfott # Y-5993-1 Borg 80553 and Magnavox 707905-1

O-703		GEAR: spur; brass, half hard; straight teeth; 101 teeth; 64 pitch, 1.575" PD; 1.591" OD; straight face, mtd concentrically to spur type gear, steel; straight teeth; 17 teeth; 64 pitch 0.2625" PD; 0.308" OD, 0.314" lg with hub .1248" diam extending 0.219" from one face of gear and 0.149" from other face.	Used with AS-313A/ARN-6	Kearfott #U-5979	Kearfott #U-5979
	or AAF #2Z4875-275 ASO #R16-G-2834	GEAR: spur; clock brass; straight teeth; 105 teeth; 64 pitch, 1.6375" PD; 1.650" OD; straight face, mtd concentrically to spur type gear; steel; straight teeth; 17 teeth; 64 pitch; .2625" PD; .3080" OD; .314" lg w/hub 0.1248" diam, extending 0.219" from one face of gear and 0.149" from other face.	Used with AS-313B/ARN-6	Kearfott #U-5979 Borg 61430	Kearfott #U-5979, Borg 61430 and Magnavox 639034-1
O-704	AAF #2Z4878-513 ASO #R16-G-2701	GEAR, spur; steel; straight teeth; 93 teeth; 64 pitch 1.450" PD; 1.466" OD, 0.150" thk; straight face; shaft extends 0.912" from face of gear, 0.1875" diam.	Used with AS-313A/ARN-6 and AS-313B/ARN-6	Kearfott #U-1515 Borg 61358	Kearfott #U-1515, Borg 61358 and Magnavox 118290-1
O-705	ASO #R77-B -115-00309-0000	BEARING, ball: single row radial; plain; medium duty; 0.50" OD x 0.1875" bore x 0.156" wd; 7 balls; packed w/"Univis P-38"; std fit; ABEC tol.	Used with AS-313A/ARN-6 and AS-313B/ARN-6	New Departure #R3X1 (W)-P3 Borg 56187	Kearfott #U-1747, Borg 56187 and Magnavox 108238-1
O-706		GEAR: spur; hardened steel; straight teeth; 17 teeth; 64 pitch, .2625" PD; .308" OD, .1198" diam bore w/3° taper; straight face.	Used with AS-313A/ARN-6	Kearfott #U-1524	Kearfott #U-1524
	or AAF #2Z4878-519 ASO #R16-G -2754-104	GEAR: spur; hardened steel; straight teeth; 13 teeth; 64 pitch, .200" PD; .2495" OD, 0.1198" diam bore w/3° taper; straight face.	Used with AS-313B/ARN-6	Kearfott #U-2220 Borg 56182	Kearfott #U-2220, Borg 56182 and Magnavox 118288-1
O-707		GEAR: spur; steel; straight teeth; 99 teeth; 48 pitch, 2.059" PD; 2.101" OD; straight face mtd concentrically to spur type gear; steel; straight teeth; 99 teeth; 48 pitch, 2.059" PD; 2.101" OD; two gears .064" thk; mtd on steel hub 0.203" diam, 1/2" lg w/fl 39/64" diam .115" thk, and having saw slot 1/64" x 5/16" lg; incl back lash spring.	Used with AS-313A/ARN-6	Kearfott #U-1544	Kearfott #U-1544
	or AAF #2Z4875-273 ASO #R16-G-2826	GEAR: spur; steel; straight teeth; 99 teeth; 48 pitch, 2.059" PD; 2.101" OD; straight face mtd concentrically to spur type gear; steel; straight teeth; 99 teeth; 48 pitch; 2.059" PD; 2.101" OD, two gears .064" thk, mtd on aluminum alloy hub .203" diam 0.450" lg w/fl 39/64" diam. .085" thk and having saw slot 1/64" x 9/64" lg; incl back lash spring.	Used with AS-313B/ARN-6	Kearfott #U-5980 Borg 61239	Kearfott #U-5980, Borg 61239 and Magnavox 639017-1
O-708	or AAF #2Z8879-239 ASO #R16-S-8450-31-5	SPRING: helical extension type; for gear backlash; .014" diam music wire; 7/16" lg, 0.109" OD; 13-1/2" turns; hook term each end on opposite sides.	Used with AS-313A/ARN-6 and AS-313B/ARN-6	Kearfott #U-1576-1 Borg 56199	Kearfott #U-1576-1, Borg 56199 and Magnavox 108244-1
O-709	or	COLLAR, shaft: aluminum, potash dip; 0.209" ID, 5/8" OD, 7/32" thk; one #6-32 tapped hole for mtg to shaft.	Used with AS-313A/ARN-6	Kearfott #U-1404	Kearfott #U-1404

TABLE OF REPLACEABLE PARTS (Continued)

MODEL: Radio Compass AN/ARN-6 **MAJOR ASSEMBLY: Loop AS-313/ARN-6, AS-313A/ARN-6, and AS-313B/ARN-6**

Reference Symbol	*Army Stock Number Navy Type Number British Ref. Number*	*Name of Part and Description*	*Function*	*Mfr. and Designation*	*Drawing Or Spec. No.*
	or AAF # 2Z2935-71	COLLAR, shaft: aluminum; potash dip; .205" ID, 1/2" OD .156" thk; one # 4-40 tapped hole for mtg to shaft.	Used with AS-313B/ARN-6	Kearfott # U-5982 Borg 56232	Kearfott # U-5982, Borg 56232 and Magnavox 118287-1
O-710	AAF # 2Z4878-523 ASO # R16-G-2706	GEAR: spur; steel, degreased, straight teeth; 99 teeth; 48 pitch; 2.059" PD; 2.101" OD, 0.4375" ID, 0.125" thk; straight face; includes spring clip riveted to end of gear.	Used with AS-313A/ARN-6 and AS-313B/ARN-6	Kearfott # U-1582 Borg 56201	Kearfott # U-1582, Borg 56201 and Magnavox 639016-1
O-711	AAF # 2Z8879-238 ASO # R16-S-8450-31	SPRING: helical extension type; for gear backlash; music wire; 1-1/8" lg, 0.150" OD; tension 75 gm 1-11/32" hook term each end same side.	Used with AS-313A/ARN-6 and AS-313B/ARN-6	Kearfott # U-1745 Borg 56227	Kearfott # U-1745, Borg 56227 and Magnavox 108218-1
O-712	AAF # 2Z4878-524 ASO # R16-G-2705	GEAR: spur; clock brass; straight teeth, 156 teeth; 48 pitch; 3.260" OD, .6090" ID, 0.187" thk; straight face; includes spring post riveted into face of gear; three 0.120" diam mtg holes, two spaced 0.692" apart, other centered and spaced 0.6" from initial two holes.	Used with AS-313A/ARN-6 and AS-313B/ARN-6	Kearfott # U-1580 Borg 56216	Kearfott # U-1580, Borg 56216 and Magnavox 639018-1
O-713	AAF # 3H2120 ASO # R16-C -29600-100	FOLLOWER: eccentric; changes vert motion of cam strip to angular motion affecting autosyn gear; c/o bkt, shaft, arm and roller; irregular shape; two 0.113" lw slots on bkt spaced 90° apart on 0.812" mtg rad.	Used with AS-313A/ARN-6 and AS-313B/ARN-6	Kearfott # U-1594 Borg 61404	Kearfott # U-1594, Borg 61404 and Magnavox 639015-1
O-714	AAF # 2A264-313A-2 ASO # R16-A -5055-8-500	LOOP SUB-ASSEMBLY: adjustable cam; c/o bellows assembly cover, one 3 cont connector, one 7 cont connector; elliptical shape; 8" lg x 4-1/2" wd x 1-1/2" d approx overall.	Used with AS-313A/ARN-6 and AS-313B/ARN-6	Kearfott # W-1708 Borg 70880	Kearfott # W-1708, Borg 70880 and Magnavox 639019
O-715	AAF # 2Z11105-25	TUBING: soft seamless copper; 5/16" OD x 0.242" ID x 7" lg.	Used with AS-313A/ARN-6 and AS-313B/ARN-6	Kearfott # U-1828 Borg 56255	Kearfott # U-1828, Borg 56255 and Magnavox 639025-1
O-716	AAF # 2Z7858-110 ASO # R16-R -30310-25	RING: cam follower track; spring steel, blue temper; 3.062" OD x 2.437" ID x 0.010" thk; cutouts 0.205" wd x 0.020" d on circum and directly opposite on ID.	Used with AS-313A/ARN-6 and AS-313B/ARN-6	Kearfott # U-1555 Borg 56254	Kearfott # U-1555, Borg 56254 and Magnavox 639023-1
O-717	AAF # 2A300.6 ASO # R16-A-5161	ARM: zero adj; steel; 3-21/32" lg x 39/64" h x 0.050" thk, irregular shape; two 0.135" x 0.052" slots spaced 0.942" apart.	Used with AS-313A/ARN-6 and AS-313B/ARN-6	Kearfott # U-1948 Borg 56256	Kearfott # U-1948, Borg 56256 and Magnavox 639013-1

O-718	ASO # R16-R -30438-50	RING, retainer: beryllium copper; 0.250" ID, .025" thk; w/loops for insertion of mtg tool.	Used with AS-313A/ARN-6 and AS-313B/ARN-6	Waldes Koh-I-Noor # 27-51 Ext. Borg P55-27-B	Kearfott # U-1709, Borg P55-27-B and Magnavox 107838-11
O-719	AAF # 2Z2935-72	COLLAR, spacing: drive gear brg spacer; steel; 0.499" OD x 0.320" ID x 0.153" thk; 0.109" w undercut to 15/32" diam.	Used with AS-313A/ARN-6 and AS-313B/ARN-6	Kearfott # U-830 Borg 56184	Kearfott # U-830, Borg 56184
O-720	AAF # 2A1178.1-72 ASO # R16-G-2702	GEAR: spur; steel; loop pinion, straight teeth; 15 teeth; 48 pitch, 0.312" PD; 0.736" OD, 0.1877" ID x 13/32" lg; straight face; 0.280" diam x 1/8" lg hub w/0.059" hole 5/64" from end.	Used with AS-313A/ARN-6 and AS-313B/ARN-6	Kearfott # U-1521 Borg 56185	Kearfott # U-1521, Borg 56185 and Magnavox 118289-1
O-721	AAF # 2Z7858-111 ASO # R16-R-30455	RING, support: adj cam support; 0.064" aluminum anodized; 3.595" OD x 0.312" h.	Used with AS-313A/ARN-6 and AS-313B/ARN-6	Kearfott # U-2291 Borg 56279	Kearfott # U-2291, Borg 56279 and Magnavox 118291-1

MAJOR ASSEMBLY: Indicators ID-90 ( )/ARN-6, ID 91 ( )/ARN-6, ID-92 ( )/ARN-6 and ID-231 ( )/ARN-6

	AAF # 2C1565-90	INDICATOR, Radio Compass: Army-Navy Indicator ID-90/ARN-6; for navigation or homing; rotor operates at 22 volts, 100 cps; panel mounting with knob for scale adjustments; overall dimensions 3-1/4" x 3-1/4" x 5-13/16"; scale graduated every 2 degrees, numbered 0 to 33 in increments of 3 at 30 degree points; color 65 (pale yellow) radio-active fluorescent luminescent material as per AN-L-13 on figures, 10 degree graduations, pointer, and reference mark on face; operation by Autosyn (synchro) motor from 100 cps source; hermetically sealed, with electrical connector to receive AN3106-14S-2S.	Pilot's indicator (Regular).	Kollsman Div. of Square D Co. No. 942-021031	Fairchild E424-E2
	or AAF # 2C1565-90	INDICATOR, Radio Compass: Army-Navy Indicator ID-90A/ARN-6; for navigation or homing; rotor operates at 22 volts, 100 cps; panel mounting with knob for scale adjustments; overall dimensions 3-1/4" x 3-1/4" x 4-55/64"; scale graduated every 2 degrees, numbered 0 to 33 in increments of 3 at 30 degree points; color 65 (pale yellow) radio-active fluorescent luminescent material as per AN-L-13 on figures, 10 degree graduations, pointer, and reference mark on face; operation by Autosyn (synchro) motor from 100 cps source; hermetically sealed, with electrical connector to receive AN-3106-14S-2S.	Pilot's indicator (Regular).	Kearfott Bendix Part No. N200250-1	Bendix N200250-1
	AAF # 2C1565-91	INDICATOR, Radio Compass: Army-Navy Indicator ID-91/ARN/6. Same as Indicator ID-90/ARN-6 (Stk No. 2C1565-90), except markings of non-radio-active materials, per AN-L-1A.	Pilot's indicator (Night fighter).	Kollsman Div. of Square D Co. No. 942-021032	Fairchild E424-F2
	or AAF # 2C1565-91	INDICATOR, Radio Compass: Army-Navy Indicator ID-91A/ARN-6. Same as Indicator ID-90/ARN-6 (Stk No. 2C1565-90), except markings of non-radio-active material, per AN-L-1A.	Pilot's indicator (Night fighter).	Kearfott	Bendix N200250-2
	or AAF # 2C1565-91	INDICATOR, Radio Compass: Army-Navy Indicator ID-91B/ARN-6. Same as Indicator ID-90/ARN-6 (Stk No. 2C1565-90), except markings of non-radio-active material, per AN-L-1A.	Pilot's Indicator (Night Fighter)	Bendix Part No. N200250-7	Bendix N-200250-7

TABLE OF REPLACEABLE PARTS (Continued)

MODEL: Radio Compass AN/ARN-6

MAJOR ASSEMBLY: Indicators ID-90 ( )/ARN-6, ID-91 ( )/ARN-6, ID-92 ( )/ARN-6, and ID-231 ( )/ARN-6

Reference Symbol	*Army Stock Number Navy Type Number British Ref. Number*	*Name of Part and Description*	*Function*	*Mfr. and Designation or JAN Type*	*Drawing Or Spec. No.*
	AAF # 2C1565-92	INDICATOR, Radio Compass: Army-Navy Indicator ID-92/ARN-6; for navigation or homing; rotor operates at 22 volts, 100 cps; panel mounting with knob for scale adjustment; overall dimensions 5-1/2" x 5-1/2" x 5-29/32"; scale graduated every degree, each ten-degree graduation marked with the appropriate number; operation by Autosyn (synchro) motor from 100 cps source; hermetically sealed, with electrical connector to receive AN3106-14S-2S.	Navigator's indicator.	Kollsman Div. of Square D Co. No. 970-021031	Fairchild E424-G2
	or AAF # 2C1565-92	INDICATOR, Radio Compass: Army-Navy Indicator ID-92A/ARN-6; for navigation or homing; rotor operates at 22 volts, 100 cps; panel mounting with knob for scale adjustment; overall dimensions 5-1/8" x 5-1/8" x 4-1/4".	Navigator's indicator.	Kearfott	Bendix Part No. AN200347-1
	AAF # 2C1565-231	INDICATOR, Radio Compass: Army-Navy Indicator ID-231/ARN-6. Same as ID-90/ARN-6 (Stk. No. 2C1565-90) except pointer is set at 270 degree mark when indicator rotor is at its electrical zero position. This indicator is intended for use in P-84 aircraft or similar special installations.	Pilot's indicator. (Special)	Kollsman Div. of Square D Co. No. 942-021033	Fairchild E424-E3
	or AAF # 2C1565-231	INDICATOR, Radio Compass: Army-Navy Indicator ID-231A/ARN/6. Same as Indicator ID-90A/ARN-6 except that pointer is set at 270° when the indicator is at electrical zero and the loop scale is 0°.	Pilot's indicator. For use when loop is mounted 90° from its normal mounting position.	Kearfott	N200250-3
	or AAF # 2C1565-231	INDICATOR, Radio Compass: Army-Navy Indicator ID-231D/ARN-6. Same as Indicator ID-90A/ARN-6 (Stk No. 2C1565-90), except pointer is set at 270 degree mark when indicator rotor is at its electrical zero position. This indicator is intended for use in P-84 aircraft or similar special installations.	Pilot's indicator. For use when loop is mounted 90° from its normal mounting position.	Bendix Part No. N200250-8	Bendix N-200250-8
	or AAF # 2C1565-231	INDICATOR, Radio Compass: Army-Navy Indicator 231E/ARN-6. Same as Indicator ID-231D/ARN-6 (Stk No. 2C1565-231) except markings of non-radio-active material per AN-L-1A.	Pilot's indicator. For use when loop is mounted 90° from its normal mounting position.	Bendix Part No. N200250-9 Borg 80552-1	Bendix N-200250-9 Borg 80522-1 and Magnavox 707882
A-801	AAF # 2ZA1352-156 ASO # R16-I-2340	WINDOW: indicator dial; c/o 0.120" thk plate glass mtg in metal case; cylindrical; 3.15" diam x 2.76" h; ring w/fl for mtg.	Used with ID-90A/ARN-6, ID-91A/ARN-6, ID-91B/ARN-6, ID-231A/ARN-6, ID-231D/ARN-6 and ID-231E/ARN-6	Kearfott # 306151 Borg 70886	Kearfott # 306151 Borg 70886 and Magnavox 639033-1

A-802	AAF # 2C1565-90A-1 ASO # R16-I-2340	INDICATOR SUB-ASSEMBLY: hermeflex; c/o bellows & shaft w/driving gear, 4 term connector and exhausting tube.	Used with ID-90A/ARN-6, ID-91A/ARN-6, ID-91B/ARN-6, ID-231A/ARN-6, ID-231D/ARN-6 and ID-231E/ARN-6	Kearfott # 306154 Borg 70884	Kearfott # 306154 Borg 70884 and Magnavox 707903-1
A-803	AAF # 2Z7093-135	PLATE, mounting: autosyn mtg; die cast aluminum; 2.776" diam x 0.725" d o/a; three 0.147" diam mtg holes spaced 120 deg apart on 2-1/4" diam.	Used with ID-90A/ARN-6, ID-91A/ARN-6 and ID-231A/ARN-6	Kearfott # V-5484	Kearfott # V-5484
A-803		PLATE, mounting: autosyn mtg; die cast aluminum; 2.776" diam x 0.725" d o/a; three 0.147" diam mtg holes spaced 120 deg apart on 2-1/4" diam.	Used with ID-91B/ARN-6, ID-231D/ARN-6 and ID-231E/ARN-6	Kearfott # 218104 Borg 61385	Kearfott # 218104 Borg 61385 and Magnavox 667857-1
A-804	AAF # 2Z3352-175 ASO # R16-C-37	COVER: indicator back cover; alum black E: round 3" diam w/bulge extending 1.948" from ctr x 1-1/16" h; three 0.147" diam holes spaced 120 deg apart on 2-1/4" mtg/diam; has holes for mtg receptacle.	Used with ID-90A/ARN-6, ID-91A/ARN-6, ID-91B/ARN-6, ID-231A/ARN-6, ID-231D/ARN-6 and ID-231E/ARN-6	Kearfott # 206160 Borg 61389	Kearfott # 206160 Borg 61389 and Magnavox 639028-1
A-805	ASO # R16-I-2339	INDICATOR SUB-ASSEMBLY: hermeflex; c/o bellows and shaft with driving gear; 4 terminal connector and exhausting tube; 2.92" diameter overall.	Used with ID-92A/ARN-6	Kearfott # 209161	Kearfott # 209161
A-806	ASO # R16-L-4889-50	WINDOW: indicator dial; mounted in metal case; 4.9" diam x 4.85" h; ring with flange for mtg.	Used with ID-92A/ARN-6	Kearfott # 309149	Kearfott # 309149
A-807	ASO # R16-H-8281	HOUSING: aluminum; 2.28" h x 4.7" diam; eight #4-40 mounting screws spaced in pairs 90 degrees apart on 3.475" and 4.139" mounting diameter.	Used with ID-92A/ARN-6	Kearfott # 309682	Kearfott # 309682
A-809	ASO # R16-C-37371	COVER, gear: clock brass; 1-33/64" lg x 1" wd x 0.064" thk overall; four 0.120" holes on 0.625" x 0.780" mounting centers; with one 0.126" and one 0.1565" hole.	Used with ID-92A/ARN-6	Kearfott # 109188-1	Kearfott # 109188-1
B-801	AAF # 3H3000S-112 ASO # R17-M-4476	MOTOR, self-synchronous: 22v, 100 cps, single phase; 1-25/32" lg x 1.750" diam; closed frame; shaft .123" diam tapered to 0.1150" diam 5/32" lg from frame; three .096" diam mounting holes counterbored .156" diam x .062" diam spaced on 1.656" diam d; 3 stator leads 2" minimum from case 2 rotor leads 2-1/2" minimum from case.	Used with ID-90A/ARN-6, ID-91A/ARN-6, ID-231A/ARN-6	Kearfott # 105486	Kearfott # 105486
B-801		MOTOR, self-synchronous: 22v, 100 cps, single phase; 1-25/32" lg x 1.437" diam; closed frame; shaft .123" diam tapered to 0.1150" diam 7/32" lg from frame; 3 stator leads and 2 rotor leads 4" minimum from case.	Used with ID-91B/ARN-6, ID-231D/ARN-6 and ID-231E/ARN-6	Kearfott # 317915 Borg 61380	Kearfott # 317915 Borg 61380 and Magnavox 537842-1

TABLE OF REPLACEABLE PARTS (Continued)

MODEL: Radio Compass AN/ARN-6

MAJOR ASSEMBLY: Indicators ID-90 ( )/ARN-6, ID-91 ( )/ARN-6, ID-92 ( )/ARN-6, and ID-231 ( )/ARN-6

Reference Symbol	*Army Stock Number Navy Type Number British Ref. Number*	*Name of Part and Description*	*Function*	*Mfr. and Designation or JAN Type*	*Drawing Or Spec. No.*
E-801	ASO #R16-B-6540-631	BOARD, terminal: HS feed-thru term; 4 solder lug term spaced 1/2" apart in 2 rows of 2-1/4" between rows; CRS w/glass; fused term; 0.97" diam; mt by soldering into case.	Used with ID-90A/ARN-6, ID-91A/ARN-6, ID-91B/ARN-6, ID-231A/ARN-6, ID-231D/ARN-6 and ID-231E/ARN-6	Cinti Elec. Prod. Borg 56302	Kearfott #106158 Borg 56302 and Magnavox 208058-1
E-802	AAF #2Z5822-233 ASO #R16-K-4094-250	KNOB: round; aluminum, black alumilite; for #6-40 shaft push on type; marked "E" "Var" "W" w/aprons; 5/16" lg 9/16" diam; shaft hole 3/16" d; medium diamond knurl.	Used with ID-90A/ARN-6, ID-91A/ARN-6, ID-91B/ARN-6, ID-231A/ARN-6, ID-231D/ARN-6 and ID-231E/ARN-6	Kearfott #101626-1 Borg 56322	Kearfott #101626-1 Borg 56322 and Magnavox 147841-1
E-803		POINTER, Indicator: brass; no dimen on this part greater than 1", black E; fluorescent paint on tip.	Used with ID-91A/ARN-6, ID-91B/ARN-6 and ID-231E/ARN-6	Kearfott #106533-2 Borg 56306	Kearfott #106533-2 Borg 56306 and Magnavox 639030-1
	or AAF #2Z7258.70 ASO #R16-P-5754-500	POINTER, indicator: brass; no dimen on this part greater than 1", black E; fluorescent radio-active paint on tip.	Used with ID-90A/ARN-6, ID-231A/ARN-6 and ID-231D/ARN-6	Kearfott #106533-1	Kearfott #106533-1
E-804		POINTER, indicator: aluminum, fluorescent finish; 2.488" lg x 0.286" wd x .010" thk; 0.156" OD hub w/0.110" hole for press fit on shaft.	Used with ID-91A/ARN-6, ID-91B/ARN-6 and ID-231E/ARN-6	Kearfott #106598-2 Borg 56303	Kearfott #106598-2 Borg 56303 and Magnavox 639031-1
	or AAF #2Z7258.67 ASO #R16-P-5154-400	POINTER, indicator: aluminum, fluorescent radio-active finish; 2.488" lg x 0.286" wd x 0.109" OD hub w/0.110" hole for press fit on shaft.	Used with ID-90A/ARN-6, ID-231A/ARN-6 and ID-231D/ARN-6	Kearfott #106598-1	Kearfott #106598-1
H-801	AAF #6L73612 ASO #R43-KER-U-1825	WASHER, spring: phosphor bronze tin pl; round 0.157" ID, 7/16" OD, .010" thk; concave to 1/2" rad.	Used with ID-90A/ARN-6, ID-91A/ARN-6, ID-91B/ARN-6, ID-231A/ARN-6, ID-231D/ARN-6 and ID-231E/ARN-6	Kearfott #101825 Borg 56299	Kearfott #101825 Borg 56299 and Magnavox 108237-1
H-802	AAF #6L58022-27 ASO #R43-KER-U-2949	WASHER, flat: SS; round 0.157" ID, 1/4" .003 thk.	Used with ID-90A/ARN-6, ID-91A/ARN-6, ID-91B/ARN-6, ID-231A/ARN-6, ID-231D/ARN-6 and ID-231E/ARN-6	Kearfott #102949 Borg 56300	Kearfott #102949 Borg 56300 and Magnavox 108234-1

H-803	ASO #R42-P-11269	PIN, grooved: galv steel; 7/32" lg x .0469" diam.	Used with ID-90A/ARN-6, ID-91A/ARN-6 and ID-231A/ARN-6	Groov. Pin Corp Type 5	Kearfott #U-1865
	or	PIN, grooved: galv steel; 7/32" lg x .0469" diam.	Used with ID-91B/ARN-6, ID-231D/ARN-6 and ID-231E/ARN-6	Groov. Pin Corp Type 5 Borg P-69-3-3-1/2 SC	Kearfott #218451-3-3-1/2 Borg P-69-3-3-1/2 SC and Magnavox 108230-1
H-804	ASO #R16-C-37369-	PIN, grooved: SS; 3/8" lg x .0469" diam.	Used with ID-90A/ARN-6, ID-91A/ARN-6 and ID-231A/ARN-6	Groov. Pin Corp Type 1	Kearfott #U-1684
	or	PIN, grooved: SS; 3/8" lg x .0469" diam.	Used with ID-91B/ARN-6, ID-231D/ARN-6 and ID-231E/ARN-6	Groov. Pin Corp Type 1 Borg P-66-3-6R	Kearfott #218450-S3-6 Borg P-66-3-6R and Magnavox 108229-1
H-805		NUT, hexagon: brass, black oxidized; #6-40; 7/64" thk 5/16" wd across flats.	Used with ID-90A/ARN-6, ID-91A/ARN-6, ID-91B/ARN-6, ID-231A/ARN-6, ID-231D/ARN-6 and ID-231E/ARN-6	Kearfott #101627-1 Borg 56323	Kearfott #101627-1 Borg 56323 and Magnavox 108228-1
H-806	AAF #6L58022-28 ASO #R16-W-1051	WASHER, flat: SS; round .169" ID, 7/16" OD, .004" thk.	Used with ID-90A/ARN-6, ID-91A/ARN-6, ID-91B/ARN-6, ID-231A/ARN-6, ID-231D/ARN-6 and ID-231E/ARN-6	Kearfott #101658 Borg 56298	Kearfott #101658 Borg 56298 and Magnavox 108235-1
H-807	AAF #6L53012-1 ASO #R43-KER-U-4811	WASHER, flat: phosphor bronze; round 0.126" ID, 0.218" OD, .005" thk.	Used with ID-90A/ARN-6, ID-91A/ARN-6, ID-91B/ARN-6, ID-231A/ARN-6, ID-231D/ARN-6 and ID-231E/ARN-6	Kearfott #104811 Borg 56215	Kearfott #104811 Borg 56215 and Magnavox 108233-1
H-808	ASO #R16-S-2182-10	SCREW, machine: slot drive; oval bind H; brass, black oxidize; .060" diam, #0-80 thd NF 2; .085" lg, thd portion .065" lg; 7/64" diam head, .017" thk.	Used with ID-90A/ARN-6, ID-91A/ARN-6, ID-91B/ARN-6, ID-231A/ARN-6, ID-231D/ARN-6 and ID-231E/ARN-6	Kearfott #102728 Borg 56310	Kearfott #102728 Borg 56310 and Magnavox 108232-1
H-809	AAF #6L73623 ASO #R16-W-1821	WASHER, spring: phosphor bronze; round, 0.8569" ID, 1-1/4" OD, 1/32" thk; 16 convolutions equally spaced 8 up and 8 down.	Used with ID-90A/ARN-6, ID-91A/ARN-6, ID-91B/ARN-6, ID-231A/ARN-6, ID-231D/ARN-6 and ID-231E/ARN-6	Kearfott #104610 Borg 56309	Kearfott #104610 Borg 56309 and Magnavox 108236-1

TABLE OF REPLACEABLE PARTS (Continued)

MODEL: Radio Compass AN/ARN-6

MAJOR ASSEMBLY: Indicators ID-90 ( )/ARN-6, ID-91 ( )/ARN-6, ID-92 ( )/ARN-6, and ID-231 ( )/ARN-6

Reference Symbol	*Army Stock Number Navy Type Number British Ref. Number*	*Name of Part and Description*	*Function*	*Mfr. and Designation or JAN Type*	*Drawing Or Spec. No.*
H-810	ASO #R16-S-2182-15	SCREW, machine hex drive, FH; steel #3-56; 0.250" lg.	Used with ID-90A/ARN-6, ID-91A/ARN-6 and ID-231A/ARN-6	Kearfott #U-4941	Kearfott #U-4941
	or				
		SCREW, machine knurled socket head cap: stainless steel passivate, #3-56 thd NF 3; 1/4" lg, thd portion.	Used with ID-91B/ARN-6, ID-231D/ARN-6 and ID-231E/ARN-6	Standard Pressed Steel Co. Borg P13-3B-4R	Kearfott #218401-S3-4 Borg P13-3B-4R and Magnavox 108231-1
H-811		WASHER, flat: CRS; round; .104" ID, 9/32" OD, .032" thk.	Used with ID-90A/ARN-6, ID-91A/ARN-6 and ID-231A/ARN-6	Kearfott #U-7197	Kearfott #U-7197
H-811		CLAMP, mounting: steel black oxide; 2 shaped; .350" x 27/64" o/a; .104" dia hole in one leg	Used with ID-91B/ARN-6, ID-231D/ARN-6 and ID-231E/ARN-6	Kearfott #118105	Kearfott #118105
J-801	ASO #17-R-1480-12	CONNECTOR, receptacle: 4 round male cont; 1-5/16" lg x 29/32" diam; four 10 amp cont; cylindrical aluminum alloy shell, sandblast; melamine insert; 1-3/16" sq fl w/four 0.020" diam holes spaced on 29/32" mtg/c; 7/8" 20 thd coupling.	Used with ID-90A/ARN-6, ID-91A/ARN-6, ID-91B/ARN-6, ID-231A/ARN-6, ID-231D/ARN-6 and ID-231E/ARN-6	AN type #AN3102-14S-2P Borg 56317	Kearfott #106161 Borg 56317 and Magnavox 187917-13
N-801	AAF #2Z3718.117 ASO #R16-P-2729-40	PLATE, identification: aluminum, black E; 1" diam x 0.025" thk; inscribed w/"RADIO COMPASS" in matte green; 1/4" diam hole in ctr; two 0.163" diam holes on 9/16" mtg/c.	Used with ID-90A/ARN-6, ID-91A/ARN-6 ID-91B/ARN-6, ID-231A/ARN-6, ID-231D/ARN-6 and ID-231E/ARN-6	Kearfott #106167 Borg 56307	Kearfott #106167 Borg 56307 and Magnavox 157869-1
N-802	AAF #2Z3718.115 ASO #R16-D-2262-50	DIAL: azimuth indicator; alum, 0.360 deg, fluorescent radioactive numerals every 30 deg, marked every 2 deg; 2.710" diam x 0.025" thk, 1.005" hole in ctr; four 0.67" diam holes spaced 90 deg apart on 1-1/4" mtg/diam.	Used with ID-90A/ARN-6, ID-231A/ARN-6 and ID-231D/ARN-6	Kearfott #206168-1	Kearfott #206168-1
	or				
		DIAL: same as above except fluorescent numerals.	Used with ID-91A/ARN-6, ID-91B/ARN-6 and ID-231E/ARN-6	Kearfott #206168-2 Borg 61303	Kearfott #206168-2 Borg 61303 and Magnavox 157868-1

O-801	ASO #R42-R-2785	RING, retainer: beryllium copper; 0.140" ID, .010" thk; loops for insertion of mtg tool.	Used with ID-90A/ARN-6, ID-91A/ARN-6, ID-91B/ARN-6, ID-231A/ARN-6, ID-231D/ARN-6 and ID-231E/ARN-6	Waldes Koh-I-Noor #5100-15 Borg P-55-15B	Kearfott #205100-15 Borg P-55-15B and Magnavox 107838-10
O-802	AAF #2Z4878-522 ASO #R16-G-2754-106	GEAR: spur; brass: straight; 54 teeth; pitch diam 1.125"; 1.167" OD, .1562" ID straight face; 1/4" diam hub extending 1/8" from face of gear; one .043" diam hole in side of hub.	Used with ID-90A/ARN-6, ID-91A/ARN-6, ID-91B/ARN-6, ID-231A/ARN-6, ID-231D/ARN-6 and ID-231E/ARN-6	Kearfott #101641	Kearfott #101641
	or	GEAR: spur: brass straight; 54 teeth; 48 pitch; 1.167" OD; 0.1562 +.0005" −.0000" ID straight face; 1/4" diameter hub extending from face of gear.	Used with ID-91B/ARN-6, ID-231E/ARN-6	Borg 56297	Borg 56297 Magnavox 118283-1
O-803	AAF #2Z11105-25	TUBING: 5/16" OD x 0.242" ID; same as O-715.	Used with ID-90A/ARN-6, ID-91A/ARN-6, ID-91B/ARN-6, ID-231A/ARN-6, ID-231D/ARN-6 and ID-231E/ARN-6	Kearfott #101828 Borg 56255	Kearfott #101828 Borg 56255 and Magnavox 118285-1
O-804	AAF #2Z602-10 ASO #R16-B-5070-25	BEZEL: indicator rear clamp ring; die cast aluminum, black E; 3-1/4" sq x 0.662" h; two 0.120" diam mtg holes ctb 13/64" diam x 9/64" d spaced 1-1/2" c to c on ea side of 2-1/4" sq; 3.076" ID.	Used with ID-90A/ARN-6, ID-91A/ARN-6, ID-91B/ARN-6, ID-231A/ARN-6, ID-231D/ARN-6 and ID-231E/ARN-6	Kearfott #306165-1	Kearfott #306165-1
	or	BEZEL: indicator rear clamp ring: die cast aluminum black E; 3.265" sq x 0.680" h; two 0.120" diam mtg holes ctb 13/64" diam x 9/64" d spaced 1-1/2" c to c on ea side of 3.265" sq; 3.076" ID.	Used with ID-91B/ARN-6, ID-231E/ARN-6	Borg 61302	Borg 61302 Magnavox 667855-1
O-805	AAF #2Z602-11 ASO #R16-B-5070-50	BEZEL: indicator front clamp ring; die cast aluminum black E; 3-1/4" sq x 0.387" h; two #4-40 tapped holes spaced 1-1/2" c to c on ea side of 2-1/4" sq; 2-7/8" ID.	Used with ID-90A/ARN-6, ID-91A/ARN-6, ID-91B/ARN-6, ID-231A/ARN-6, ID-231D/ARN-6 and ID-231E/ARN-6	Kearfott #205586-1	Kearfott #205586-1
	or	BEZEL: indicator front clamp ring: die cast aluminum black E; 3-1/4" sq x 0.400" h; two #4-40 tapped holes 3/16" d spaced 1-1/2" c to c on ea side of 3-1/4" sq; 2.867" ID.	Used with ID-91B/ARN-6, ID-231E/ARN-6	Borg 61301	Borg 61301 Magnavox 667856-1
O-806	AAF #2Z4878-514 ASO #R16-G-2754-105	GEAR: spur; aluminum, potash dip; straight teeth; 20 teeth; 64 pitch, .3125" PD; .344" OD, .106" thk, straight face; shaft extends 1.071" from face of gear.	Used with ID-90A/ARN-6, ID-91A/ARN-6, ID-91B/ARN-6, ID-231A/ARN-6, ID-231D/ARN-6 and ID-231E/ARN-6	Kearfott #106169 Borg 56311	Kearfott #106169 Borg 56311 and Magnavox 118380-1

TABLE OF REPLACEABLE PARTS (Continued)

MODEL: Radio Compass AN/ARN-6

MAJOR ASSEMBLY: Indicators ID-90 ( )/ARN-6, ID-91 ( )/ARN-6, ID-92 ( )/ARN-6, and ID-231 ( )/ARN-6

Reference Symbol	*Army Stock Number Navy Type Number British Ref. Number*	*Name of Part and Description*	*Function*	*Mfr. and Designation*	*Drawing Or Spec. No.*
O-807	AAF #2Z3273-125 ASO #R16-C-35980-801	COUPLING, rigid: split sleeve; .128" shaft size ea end; groove pin mtg; 11/16" lg x 7/32" diam; CRS.	Used with ID-90A/ARN-6, ID-91A/ARN-6, ID-91B/ARN-6, ID-231A/ARN-6, ID-231D/ARN-6 and ID-231E/ARN-6	Kearfott #101867	Kearfott #101867
	or	COUPLING, rigid: split sleeve; .0125" +.001 −.000 shaft size ea end; groove pin mtg; 11/16" lg x 7/32" diam; steel.	Used with ID-91B/ARN-6, ID-231E/ARN-6	Borg 56312	Borg 56312 Magnavox 118279-1
O-808	AAF #2Z8204-31 ASO #R16-S-3851	SHAFT: SS, passivated; 3-3/16" lg x .156" diam; one end of shaft #6-40 thd x 29/64" lg from end of shaft.	Used with ID-90A/ARN-6, ID-91A/ARN-6, ID-91B/ARN-6, ID-231A/ARN-6, ID-231D/ARN-6 and ID-231E/ARN-6	Kearfott #106170	Kearfott #106170
	or	SHAFT: SS; 3-13/16" lg x .156" diam; one end of shaft #6-40 thd x 29/64" lg from end of shaft.	Used with ID-91B/ARN-6, ID-231E/ARN-6	Borg 56320	Borg 56320 Magnavox 118284-1
O-809	AAF #2Z4878-512 ASO #R16-C-2754-101	GEAR: spur, SS; straight teeth; 21 teeth; 98 pitch, .4375" PD; .479" OD, 3/32" thk; straight face 5/16" diam hub extends 9/64" from face of gear; .043" diam hole in side of hub.	Used with ID-90A/ARN-6, ID-91A/ARN-6, ID-91B/ARN-6, ID-231A/ARN-6, ID-231D/ARN-6 and ID-231E/ARN-6	Kearfott #101643	Kearfott #101643
	or	GEAR: spur; straight teeth; 21 teeth; 48 pitch; .479 +.000" −.002 OD; 3/32" thk; straight face 5/16" diam hub extends .130" from face of gear.	Used with ID-91B/ARN-6, ID-231E/ARN-6	Borg 56321	Borg 56321 Magnavox 118281-1
O-810	ASO #R42-4-2780	RING, retainer: beryllium copper; 0.112" ID, .010" thk w/loops for insertion of mtg tool.	Used with ID-90A/ARN-6, ID-91A/ARN-6, ID-91B/ARN-6, ID-231A/ARN-6, ID-231D/ARN-6 and ID-231E/ARN-6	Waldes Koh-I-Noor Borg P55-12B	Kearfott #205100-12 Borg P55-12B Magnavox 107838-9

O-811	AAF # 2Z4878-521	GEAR: spur; aluminum alloy; straight teeth; 92 teeth; 64 pitch; 1.4375" PD; 1.469" OD; .064" thk; straight face; four #0-80 tapped holes spaced 90 deg apart on 1-1/4" mtg diam.	Used with ID-90A/ARN-6, ID-91A/ARN-6, ID-91B/ARN-6, ID-231A/ARN-6, ID-231D/ARN-6 and ID-231E/ARN-6	Kearfott # 101616 Borg 56308	Kearfott # 101616 Borg 56308 and Magnavox 118282-1
O-812	ASO # R16-G-2709	GEAR: spur; SS; passivate; straight teeth; 22 teeth; 48 pitch; 0.4583" PD; 0.500" OD; 0.123" thk; straight face; shaft extends 1.408" beyond face, shaft 0.1562" diam.	Used with ID-92A/ARN-6	Kearfott # 109182	Kearfott # 109182
O-813	ASO # R16-G-2754-102	GEAR: spur, SS; straight teeth; 21 teeth; 48 pitch; 0.4791" OD; 0.1562" bore; 0.234" thk; straight face; 17/64" diam hub x 0.125" lg from face of gear; 0.043" diam hole 0.062" from end of hub.	Used with ID-92A/ARN-6	Kearfott # 109186	Kearfott # 109186
O-814	ASO # R16-R-30440	RING, retainer: phosphor bronze; 4.890" OD when closed to 1/8" gaps; 5-1/2" OD when free x 0.064" wire diam.	Used with ID-92A/ARN-6	Kearfott # 109179-1	Kearfott # 109179-1
O-815		BEZEL: indicator front clamp ring; aluminum, anodize, black E; 1-1/16" thk x 5-7/8" diam holes spaced 90° apart on 5-3/8" diam.	Used with ID-92A/ARN-6	Kearfott # 309190-1	Kearfott # 309190-1
O-816	ASO # R16-B-4700	BEARING, sleeve: phosphor bronze; female; 0.203" lg x 5/16" OD, undercut 0.078" from end to 0.2665", 0.1565" ID.	Used with ID-92A/ARN-6	Kearfott # 109167	Kearfott # 109167
O-817	ASO # R16-R-30439	RING, retainer: brass alloy; 4.640" ID; 4.840" OD x 0.015" thk.	Used with ID-92A/ARN-6	Kearfott # 109232	Kearfott # 109232
O-818	ASO # R16-S-3843-16	SHAFT: SS; passivate; 2-15/16" lg x 0.1562" diam.	Used with ID-92A/ARN-6	Kearfott # 109158	Kearfott # 109158

TABLE OF REPLACEABLE PARTS (Continued)

MODEL: Radio Compass AN/ARN-6

MAJOR ASSEMBLY—Miscellaneous

Reference Symbol	*Army Stock Number Navy Type Number British Ref. Number*	*Name of Part and Description*	*Function*	*Mfr. and Designation or JAN Type*	*Drawing Or Spec. No.*
	AAF # 6D10112	PLATE, instruction: summary of operating instructions for Radio Compass AN/ARN-6; aluminum; 4½" x 6-15/16" x 1/64"; lettering is raised aluminum on black background.	Operating instructions.		
	AAF # 1F430-320.15	LINE, RF transmission: Army-Navy Cord CG-320/ARN-6; coaxial; characteristic impedance not specified, but has nominal capacitance of 6.5 mmf/ft or 100 mmf for the complete line; inner conductor #33 AWG phosphor bronze or copper-clad steel, outer-conductor single-layer copper braid, 0.340" OD; dielectric is polyethylene and air, the air space being provided by wrap of polyethylene filaments around inner conductor; 15 ft −0, +10" lg overall; equipped with connectors Sig C plug PL-259A at each end, used to connect Coupling Unit CU-65/ARN-6 to Radio Compass Unit R-101/ARN-6.	Sense antenna lead-in (15 ft).	Bendix Part No. L212607-1	Fairchild C424-AT1 and Bendix L212607-1
	AAF # 1F430-405.72	LINE, RF transmission: Army-Navy Cord CG-405/ARN-6; coaxial; characteristic impedance not specified, but has nominal capacitance of 16.2 mmf/ft or 100 mmf for the complete line; inner-conductor 1 strand #21 AWG soft copper wire; outer-conductor single-layer copper braid, 0.340" OD; dielectric is polyethylene; 6 ft −0, +5" lg overall; equipped with connectors Sig C Plug PL-259A at each end; used to connect Coupling Unit CU-65/ARN-6 to Radio Compass Unit R-101/ARN-6.	Sense antenna lead-in (6 ft).	Bendix Part No. L212608-1	Fairchild C424-AS1 and Bendix L212608-1
	AAF # 3E6015-131	LINE, RF transmission: Army-Navy Cord CG-131/ARN-6; 3-conductor flat parallel within flexible conduit; impedance not specified, but capacity is 135 mmf between terminals B and C; each conductor is 7 strands of #30 AWG, approx equivalent to #13 AWG; insulation is HF polyethylene, thickness to make OD of each strand 0.078"; flexible conduit is interlocking tubing, with an outside jacket of synthetic rubber; ID is 3/8", OD is 37/64"; length 6 ft; one end of assembly fitted with connector AN3106A-14S-1S, other end with AN3108B-14S-1S. Used to connect Loop AS-313/ARN-6 to Radio Compass Unit R-101/ARN-6.	Transmission line, loop to receiver, (6 ft; one angle, one straight connector).	Bendix Part No. L212601-1	Fairchild C424-H1 and Bendix L212601-1
	AAF # 3E6015-132	LINE, RF transmission: Army-Navy Cord CG-132/ARN-6. Same as 3E6015-131, except has AN3108B-14S-1S connector at each end.	Transmission line, loop to receiver, (6 ft; angle connector at each end).	Bendix Part No. L212602-1	Fairchild C424-J1 and Bendix L212602-1
	AAF # 3E6015-133	LINE, RF transmission: Army-Navy Cord CG-133/ARN-6. Same as 3E6015-131, except length is 15 ft.	Transmission line, loop to receiver, (15 ft; one angle, one straight connector).	Bendix Part No. L212601-2	Fairchild C424-K1 and Bendix L212601-2
	AAF # 3E6015-134	LINE, RF transmission: Army-Navy Cord CG-134/ARN-6. Same as 3E6015-131, except length is 15' and has AN3108B-14S-1S connector at each end.	Transmission line, loop to receiver, (15 ft; angle connector at each end).	Bendix Part No. L212602-2	Fairchild C424-L1, Bendix L212602-2 and Magnavox 707883

1-099		CONTROL UNIT, Radio Receiver: Army-Navy Control Panel C-1514/A; optional equipment for Radio Compass AN/ARN-6; has 4-band dial with band-selector switch and tuning crank, Volume control, CW Voice switch, LOOP L-R switch, and function switch; panel 5-3/4" wide x 4-1/2" high; mounts in cutout; 4 mtg holes with lock springs on 5-3/8" x 3-3/8" C; includes plastic lighting panel.	Operating control for system	N. American Phillips DX-556	Magnavox 708056-1
E-1		KNOB, Round: Alum-alloy, black anodized; for 1/4" diam. shaft; two 8-32 set screws; 9/64" flange, 3/64" slot in fl; outlined w/ 3/64" wd white line both sides; 1-1/8" diam over-all; knurl 13/16" diam x 3/8" H; 9/16" over-all; shaft hole 7/16" d.	Volume Control	N. American Phillips B2-1422	Magnavox 147859-1
E-2		KNOB, Round: Black plastic; for 1/4" diam shaft; two 8-32 set screws; 1-1/8" diam x 5/8" H over-all; brass insert; shaft hole 7/16" d; flange 3/32" d from outer edge represents index.	Bandswitch	S-308-64-BB-B-A Kurz-Kasch	Magnavox 147860-1
E-3		KNOB, Bar: Alum alloy, black anodized; for 1/4" diam shaft; two 8-32 set screws; 9/64" fl; 3/64" slot in fl outlined w/ 3/64" wd white line both sides; 1-1/8" diam over-all, 1/4" d flats both sides of knurl; knurl 13/16" diam x 3/8" H; 9/16" H over-all; shaft hole 7/16" d.	Function switch	N. American Phillips B2-1421	Magnavox 147858-1
E-4		KNOB: Same as Ref. E-3.	Loop L-R Control	N. American Phillips B2-1421	
I-1	8870-936000-555	LAMP, Incandescent: 28V, 40ma; T 1-3/4" bulb; clear; 5/8" long; special base; 9/32" diam knurled flange; 5/16"-32 mtg.	Dial light		AN-3140-327 Magnavox 180161-14
I-2	8870-936000-555	LAMP: Same as Ref. I-1.	Panel light		AN-3140-327 Magnavox 180161-14
I-3	8870-936000-555	LAMP: Same as Ref. I-1.	Panel light		AN-3140-327 Magnavox 180161-14
O-1		CRANK, Band: Tuning; alum alloy, black anodized 1-3/8" lg x 5/8" wd x 1-1/4" H over-all; 3/16" diam shaft hole, 3/8" d; two 6-32 set screws 90° apart thru side of hub.	Tuning crank	N. American Phillips BX-1356	147861-1
R-1		RESISTOR, Fixed: Composition; 22,000 ohms ±10%, 1/2w, 0.468" lg x 0.249" diam; insulated; two axial wire lead term; JAN type RC20BF223K.	Tuning indicator limiting	RC20BF223K Stackpole Type JAN-R-11	JAN-R-11 Magnavox 237804-78
R-2	3350-101000-2291	RESISTOR, Fixed: Composition; 130 ohms ±5%; 1/2w, 0.468" lg x 0.249" diam; insulated; two axial wire lead term; JAN type RC20BF131J.	Fixed resistor Volume Control Bridged-T circuit	3RC2BF131J Stackpole Type JAN-R-11	JAN-R-11 Magnavox 237804-138

TABLE OF REPLACEABLE PARTS (Continued)

MODEL: Radio Compass AN/ARN-6

MAJOR ASSEMBLY: Control Panel C-1514/A

Reference Symbol	*Army Stock Number Navy Type Number British Ref. Number*	*Name of Part and Description*	*Function*	*Mfr. and Designation or JAN Type*	*Drawing Or Spec. No.*
R-3		RESISTOR, Variable: Composition; 3 sec; sec. A. 100,000 ohms ±30% sec. B, 12,500 ohms ±50%; sec. C, 35,000 ohms ±30%; each sec enclosed in metal case 1-1/16" diam, total depth 1-7/8"; two solder lug each sec; round metal shaft 1/4" diam x 7/8" lg from mtg surface; sec A resistance CW end Max. 4 ohms, at 235° CCW 360 ohms; Sec B resistance CCW end max. 4 ohms at 235° CCW 360 ohms; Sec C resistance, CW end max 20 ohms 252° CCW 10,000 ohms, 156° CCW 1500 ohms, 62° CCW 300 ohms; insulated contact arm; normal torque; bushing 3/8"-32 x 1/2" lg. USAF dwg. 47D41350.	Volume Control	N. American Phillips C-3-737	Magnavox 227829-1
R-4	3RC30BF821J	RESISTOR, Fixed: Composition; 820 ohms ±5%, 1 W; 0.750" lg x 0.280" diam; insulated; two axial wire lead term; JAN type RC30BF821J.	Loop damping	RC30BF821J	JAN-R-11 Magnavox 237804-78
R-5	3350-101000-2291	RESISTOR: Same as Ref. R-2.	Fixed resistor Volume Control Bridged-T Circuit	RC20BF131J Stackpole Type JAN-R-11	JAN-R-11 Magnavox 237804-138
S-1		SWITCH SECTION, Rotary: Band change; 4 position, 6 contact; phenolic; hermetically sealed; 5 terminals thru case; 2-1/8" lg x 1-11/16" wd x 5/8" thk; two .136" mtg holes on 1.562" mtg C.	Bandswitch	N. American Phillips BX-1696	Magnavox 167945-1
S-2		SWITCH, Rotary: 5 position; 3 secs; first sec, 12 contacts; second sec, 8 contacts; first two secs, laminated phenolic body, coin silver alloy rotor blades, spring silver alloy cont; third section is DPST ac switch, 1 amp at 250 V, which is on in position 5 and off in all other positions; 1-15/16" lg x 1-9/16" wd x 2-5/16" d over-all; counterclockwise spring return from position 5 to 4; single hole mtg; bushing 3/8"-32 x 1-3/16" lg; shaft 1/4" diam x 3/8" lg beyond bushing.	Function Selector "OFF-ADF-ANT-LOOP-CONT."	N. American Phillips C3-616	Magnavox 167946-1
S-3		SWITCH, Rotary: Single pole, 170° rotation, circuit closed at midpoint of rotation; coin silver alloy rotor blades, spring silver alloy cont; laminated phenolic body; 1-7/8" lg x 1-3/4" wd x 3-3/8" d over-all; single hole mtg; bushing 3/8"-32 x 1/4" lg; 1/4" diam x 7/16" lg shaft; includes variable resistor.	Loop L-R	N. American Phillips CX-756	Magnavox 167947-1
S-4		SWITCH, Toggle: SPST; 3 amp, 250 V; phenolic body; 1" lg x 17/32" wd x 9/16" d; 1/2" lg bat type handle; solder lug term; single hole mtg bushing 15/32" x 32" x 15/32" lg; black oxide finish on all exposed parts.	"CW-VOICE" Switch	N. American Phillips A1-4398 Cutler-Hammer KSP-15	Magnavox 167873-1
P-101		CONNECTOR-RECEPTACLE: 34 contact; male; rect; 2" lg x 3/4" wd. Mounting centers 1.687"; 2 screw mounts; Winchester #MRE-34P-G.		MRE-34P-G Winchester Electronics	Magnavox 188074-1

TABLE OF REPLACEABLE PARTS (Continued)

MODEL: Radio Compass AN/ARN-6 **MAJOR ASSEMBLY: Control Panel C-403A/A**

Reference Symbol	*Army Stock No. Navy Type No. British Ref. No.*	*Name of Part and Description*	*Function*	*Mfr. and Designation or JAN No.*	*Drawing or Spec. No.*
101-199	2C667-403A	CONTROL UNIT, Radio receiver: Army-Navy Control Panel C-403A/A; optional equipment for Radio Compass AN/ARN-6; has 4-band dial with band-selector switch and tuning crank, VOLUME control, CW VOICE switch, LOOP L-R switch, tuning meter, LIGHTS HI LO switch, and function control switch; panel 9" lg x 5" wd; mounts in cutout on flat surface; 4 mtg holes for 8-32 screws on 8-5/8" x 4-5/8" c; includes plastic lighting panel, 5 lights AN3502, four lamps AN3136-R 323 (two in use, two spare).	Operating control for system	Aermotive Equipment Corp.	USAF X50F12882
E-101		KNOB, round: black plastic; for 1/4" diam shaft; two 8-32 setscrews; marked with a white line from center to outside edge; 7/8" diam x 1/2" H overall; brass insert; shaft hole 13/32" D; medium straight knurl.	Volume control	Dimco-Gray 211	USAF X50B13038
E-102		KNOB, lever: black enamel alum; for 1/4" diam shaft; two 8-32 setscrews; arrow marked; 1-13/16" lg x 7/8" wd x 5/8" H overall; shaft hole 17/32" deep.	Bandswitch	Aermotive Equipment Corp.	USAF X50B13053
E-103	2Z5822-216	KNOB, bar: black plastic; for 1/4" diam shaft; two 8-32 setscrews; arrow marked; 1-1/4" lg x 3/4" wd x 11/16" H overall; brass insert; shaft hole 3/8" deep.	Function switch	Telephonics Corp. TC 35025	USAF 47A40527
E-104	2Z5822-216	KNOB: Same as Ref. E-103.	Loop L-R control		
I-101		LAMP, incandescent: 3 V, 190 ma; T 1-1/4 bulb; red 17/32" long; special base; 3/8" diam knurled flange; 5/16"-32 mtg.	Meter light	General Electric Co. 323R	AN3136-R-323
I-102		LAMP: Same as Ref I-101.	Dial Light		
I-103		LAMP, incandescent: 28 V, 400 ma; T 3/4 bulb; red; C 21; 5/8" height; insert mtg.	Panel light	General Electric Co. 327	AN3140-327
I-104		LAMP: Same as Ref I-103.	Panel light		
I-105		LAMP: Same as Ref I-103.	Panel light		
I-106		LAMP: Same as Ref I-103.	Panel light		
I-107		LAMP: Same as Ref I-103.	Panel light		
M-101	3F872J9	Meter, arbitrary scale: dc; sq, plastic flush mtg case; 1-3/4" sq flange, 1-1/2" diam body x 25/32" d behind flange; ±3% accuracy full scale; 115 microamp zero right reading, 295 microamp full scale left deflective; calibrated for non-magnetic panel; dull black background, six evenly spaced divisions (7 lines) and arrow, titanium white; "tune to max" grayish white; self contained; four 1/8" diam mtg holes on 1.312" x 1.312" centers; two solder lug term on 3/4" centers.	Tuning meter	DeJur Amsco Corp. 59.2004	USAF 47B41361-1
O-101	2Z3407.29	CRANK, hand: tuning; arm, alum alloy black enameled; knob, black molded plastic; 2" lg x 3/4" wd x 1-1/2" H overall; 1/4" shaft hole 13/32" D; two 8-32 set screws 90° apart thru side of hub.	Tuning crank	Aermotive Equipment Corp.	USAF 47A41364
R-101	3RW19520	RESISTOR, fixed: wire wound JAN type RW-31F161; 160 ohms; 8 W at 275° C max continuous operation; body dimen 1-1/2" lg x 19/32" diam; two solder lug term.	Current limiter, light circuit	RW31F161	JAN-R-26
R-102	3RW15914	RESISTOR, fixed: wire wound; JAN type RW-30F400; 40 ohms; 8 W at 275° C max continuous operation; body dimen 1" lg x 19/32" diam; two solder lug term.	Dimmer light circuit	RW30F400	JAN-R-26

TABLE OF REPLACEABLE PARTS (Continued)

MODEL: Radio Compass AN/ARN-6 **MAJOR ASSEMBLY: Control Panel C-403A/A**

Reference Symbol	*Army Stock No. Navy Type No. British Ref. No.*	*Name of Part and Description*	*Function*	*Mfr. and Designation or JAN No.*	*Drawing or Spec. No.*
R-103	3Z7470-1	RESISTOR, variable: composition; 3 sec; sec. A, 70,000 ohms ± 30%; sec. B, 10,000 ohms ± 50%; sec. C, 35,000 ohms ± 30%; each sec enclosed in metal case 1 1/16" diam, total depth 1 7/8"; two solder lug each sec; round metal shaft 1/4" diam x 7/8" lg from mtg surface; sec A resistance at 35% clockwise rotation 6500 ohms, at 50% 3500 ohms, at 65% 1800 ohms; sec B at 35% 1.8 ohms, at 50% 3.8 ohms, at 65% 8 ohms; sec C at 35% 4000 ohms, at 50% 1150 ohms, at 65% 800 ohms; insulated contact arm; normal torque; bushing 3/8"-32 x 7/16" lg. USAF dwg 47D41-350.	Volume control	Allen-Bradley JJJ 17921	USAF 47D41350
R-104		(Reference number not assigned)			
R-105	3RC20BF131J	RESISTOR, fixed: composition; 130 ohms ± 5%; 1/2 W; 0.468" lg x 0.249" diam; insulated; two axial wire lead term; JAN type RC20BF131J.	Fixed resistor Volume control Bridged-T circuit	RC20BF131J	JAN-R-11
R-106	3RC20BF131J	RESISTOR: Same as Ref. R-105	Fixed resistor Volume control Bridged-T circuit		
R-107	3RC20BF223K	RESISTOR, fixed: composition; 22,000 ohms ± 10%; 1/2 W; 0.468" lg x 0.249" diam; insulated; two axial wire lead term; JAN type RC20BF223K.	Tuning indicator limiting	RC20BF223K	JAN-R-11
R-108	3RC30BF821J	RESISTOR, fixed: composition; 820 ohms ± 5%; 1 W; 0.750" lg x 0.280" diam; insulated; two axial wire lead term; JAN type RC30BF821J.	Loop damping	RC30BF821J	JAN-R-11
R-109	3RW19520	RESISTOR: Same as Ref. R-101.	Current limiter, light circuit		
R-110	3RW15914	RESISTOR: Same as Ref. R-102.	Dimmer, light circuit		
S-101	3Z9903E-3.33	SWITCH SECTION, rotary: band change; 4 position, 6 contact; phenolic; 1 7/8" lg x 1 3/16" wd x 1/16" thk; two .136" mtg holes on 1.562" mtg c.	Band switch	Oak Mfg. Co. 35136-H	USAF 47B41352
S-102	3Z9825-62.336	SWITCH, rotary: 5 position; 3 secs; first sec, 12 contacts; second sec, 8 contacts; first two secs, laminated phenolic body, coin silver alloy rotor blades, spring silver alloy cont; third sec is DPST ac switch, 1 amp at 250 V, which is on in position 5 and off in all other positions; 1 15/16" lg x 1 3/16" wd x 2 5/16" d overall; counterclockwise spring return from position 5 to 4; single hole mtg; bushing 3/8"-32 x 1 3/16" lg; shaft 1/4" diam x 3/8" lg beyond bushing.	Function selector "OFF-COMP-ANT-LOOP-CONT."	Oak Mfg. Co. 35201-H2AC	USAF 47D41351
S-103	2A665-10	SWITCH, rotary: single pole, 170° rotation, circuit closed at midpoint of rotation; coin silver alloy rotor blades, spring silver alloy cont; laminated phenolic body; 1 7/8" lg x 1 3/4" wd x 3" d overall; single hole mtg; bushing 3/8"-32 x 1/4" lg; 1/4" diam x 1/2" lg shaft; per USAF assy dwg 47B41354; includes variable resistor per USAF dwg 47D-41355.	Loop L-R control	Aermotive Equipment Corp. A5853	USAF 47B41354

TABLE OF REPLACEABLE PARTS (Continued)

Model: Radio Compass AN/ARN-6 **Major Assembly: Control Panel C-403-A/A**

Reference Symbol	*Army Stock No. Navy Type No. British Ref. No.*	*Name of Part and Description*	*Function*	*Mfr. and Designation or JAN No.*	*Drawing or Spec. No.*
S-104	3Z9863-11A	SWITCH, toggle: SPST; 3 amp, 250 V; phenolic body; 1-1/16" lg x 1/2" wd x 1" d; 1/2" lg bat type handle; solder lug term; single hole mtg bushing 15/32"-32 x 15/32" lg; black oxide finish on all exposed parts; Cutler-Hammer No. 8280K16 or Arrow H & H No. 80994K.	"CW-VOICE" switch	Cutler-Hammer 8280K16 or Arrow H & H 80994K	Cutler-Hammer 8280K16 or Arrow H & H 80994K
S-105	3Z9863-52P	SWITCH, toggle: DPDT; JAN type ST52P; 30 amp, 30 vdc; phenolic body; 1-21/64" lg x 49/64" wd x 1-1/16" d; 11/16" lg bat type handle; solder lug term; single hole mtg bushing 15/32"-32 x 15/32" lg; black oxide finish, on all exposed parts; spec JAN-S-23; Cutler-Hammer No. 8821K5.	Light HI-LO control	ST52P	JAN-S-23

Model: Radio Compass AN/ARN-6 **Major Assembly: Control Panel C-758/A**

101-199	— — 1600-013080010	CONTROL, receiver: Army-Navy Control Panel C-758/A; p/o Radio Compass AN/ARN-6; has 4-band dial, I-106 band selector switch, S-101, tuning crank, O-104, VOLUME control, R-103, CW VOICE switch, S-104, LOOP L-R switch, S-103, tuning meter, M-101, and function control switch, S-102; panel 8-1/4" lg, 5-3/4" wide; mounts by Dzus spiral cam fastener studs; includes plastic lighting plate, A-101.	Operating control for system	N. American Philips FX-2501	
A-101		PLATE, plastic lighting: material, plastic lighting plate per Spec. AN-P-89 type I; rectangular shape; 8.125" high, 5.625" wide, 0.187" thick; four 0.180" dia mtg holes; white markings for RADIO COMPASS, LOOP L-R, selector switch, VOLUME, TUNING, CW VOICE, and for frequency ranges for the 4 bands.	Front panel	N. American Philips D4-316-E	
A-102		HOUSING: Spline Housing; drives tuning shaft coupling between Control Panel C-758/A and Radio Compass Unit R-101/ARN-6 or R-101A/ARN-6; consists of Spline, USAF dwg No. 47A41415, Housing, USAF dwg No. 47A41416, and Bevel Pinion, Boston Gear part No. G481 Catalog 53; approx 1-13/16" lg, 5/8" OD; threaded on spline end; part of O-103.	Tuning coupling shaft drive		USAF 47B41414
E-101		LAMP, incandescent: 28V, 0.04 amp; bulb T-1-3/4 clear; 5/8" max lg OA; midget flange base; burn any position; part of I-101.	Panel light	GE 327	ANA AN3140-327
E-102		LAMP, incandescent: 28V, 0.04 amp; bulb T-1-3/4 painted silicate red; 5/8" max lg OA; midget flange base; burn any position; part of I-102.	Meter and dial light	GE 327-red	ANA AN3140-327-R
E-103		LAMP: same as E-101; part of I-103.	Panel light		
E-104		LAMP: same as E-101; part of I-104.	Panel light		
E-105		LAMP: same as E-101; part of I-105.	Panel light		

TABLE OF REPLACEABLE PARTS (Continued)

Model: Radio Compass AN/ARN-6 **Major Assembly: Control Panel C-758/A**

Reference Symbol	*Army Stock No. Navy Type No. British Ref. No.*	*Name of Part and Description*	*Function*	*Mfr. and Designation or JAN No.*	*Drawing or Spec. No.*
E-106	— — 3320-292181380	KNOB: round; black molded plastic; for 1/4" dia shaft; 2 No. 8-32 NC-2B, AN565DH4, setscrews; white line from center to outside edge; 7/8" dia, 1/2" high, OA; brass insert; 13/32" deep shaft hole; medium straight knurl.	Volume control		USAF 50B13038
E-107	2Z5822-216 — 3320-292241388	KNOB: bar; black molded plastic; for 1/4" dia shaft; 2 No. 8-32 NC-2B, AN565DH4, setscrews; arrow marking; 1-1/4" lg, 3/4" wide, 11/16" high, OA; brass insert; 7/16" deep shaft hole.	Function switch	Telephonics Corp. TC35025	USAF 47A40527
E-108		KNOB: same as E-107.	Loop L-R		
E-109		KNOB: lever; black aluminum alloy; for 1/4" dia shaft; 2 No. 8-32 NC-2B, AN565D8H3, setscrews; arrow marking; 1-13/16" lg, 7/8" wide, 11/16" high, OA; shaft hole 0.593" deep; side of base has integral pointer.	Band switch		USAF 47B41363
H-101		POINTER, indicator: clear transparent plastic; 2-11/16" lg, 1-25/32" wide, 0.225" thick; mounts by two 0.136" dia holes on 1.718" mtg centers; permanent white indicating line down center.	Band dial indicator	N. American Philips C3-535-A	
I-101		LIGHT, panel: consists of Retainer Assembly, Grimes Mfg dwg No. A-4996, Lamp Housing Assembly; Grimes Mfg dwg No. A-5181, and lamp, ANA dwg No. AN3140-327; 1-3/8" lg, 9/16" OD, OA; Retainer Assembly mounts onto Back Panel from front, Lamp Housing Assembly mounts into Retainer Assembly by externally threaded base.	Panel light	Grimes Mfg. A-5890-327 supersedes A-5180-327	MIL STANDARD MS25010-1
I-102		ADAPTER, lamp base: consists of lamp adapter, N. American Philips part/dwg No. B2-969, lamp, ANA dwg No. AN3140-327R, spring retainer, USAF dwg No. 48A12879, and light seal, USAF dwg No. 48A12715; approx 1-3/8" lg, 11/16" OD, OA; bayonet mounted.	Meter and dial light	N. American Philips BX-967	
I-103		LIGHT, panel: same as I-101.	Panel light		
I-104		LIGHT, panel: same as I-101.	Panel light		
I-105		LIGHT, panel: same as I-101.	Panel light		
I-106 I-106	— — 3320-291396336	DIAL: consists of Tuning Dial Plate, USAF dwg No. 47D41387, and Dial Hub, USAF dwg No. 47A41388; 3.937" dia, 9/32" thick; mounts by 2 No. 6-32 NC-2B holes in hub; has 4 concentric calibrations denoting frequencies in kc for the 4 bands.	Band tuning		USAF 47B41386
I-107		DIAL: consists of Selector Dial Plate, USAF dwg No. 47B41384, and hub, USAF dwg No. 47A41385; 3-15/16" OD, 1/4" ID; aluminum alloy; one No. 6-32 NC-2B mtg hole; has 4 cutouts denoting frequency ranges for the 4 bands.	Band selector dial		USAF 47B41383

TABLE OF REPLACEABLE PARTS (Continued)

Model: Radio Compass AN/ARN-6 **Major Assembly: Control Panel C-758/A**

Reference Symbol	*Army Stock No. Navy Type No. British Ref. No.*	*Name of Part and Description*	*Function*	*Mfr. and Designation or JAN No.*	*Drawing or Spec. No.*
J-101		CONNECTOR, receptacle: Army-Navy Connector, Receptacle AN3102A-28-12P; 26 rd male contacts; straight type; 1-11/32" lg less contacts, 1-5/8" OD; cylindrical aluminum body; molded phenolic insert; mounts by 2" by 2" rectangular flange having four 0.147" dia mtg holes on 1.562" mtg centers; has has internal polarizing key.	Mates with female connector from Radio Compass Unit	Amphenol AN3102A-28-12P	MIL AN3102A-28-12P MIL-C-5015A
M-101		METER, arbitrary scale: dc; sq plastic flush mtg case; 1-1/2" barrel dia, 0.778" deep behind flange, 1-3/4" sq flange; ±3% accuracy for full scale reading; 295 μa full scale left deflection, 105-125 μa from bumper to first scale mark; calibrated for non-magnetic panel; dull black background six even divisions (7 lines) and arrow titanium white, luminescent pointer, TUNE TO MAX grayish white; self contained; four 1/8" dia mtg holes on 1.312 by 1.312" centers; 2 solder lug terminals on 3/4" centers; terminal positions marked + and −.	Tuning meter	Dejur Amsco Type FA-112	USAF 48C12723
O-101		ARM: detent for tuning drive selector cam; consists mainly of Detent Arm, USAF dwg No. 47B41402, and Tension Spring, USAF dwg No. 47A41399; approx 2-3/8" lg, 7/16" wide, and 11/16" deep, less spring; mounts by eccentric pin threaded No. 4-40 NC-2B by 7/32" on one end.	Tuning drive detent		USAF 47B41398
O-102		CAMSHAFT: consists of Cam, USAF dwg No. 47B41396, and Shaft, USAF dwg No. 47A41397; steel, passivated finish; 2-5/16" lg, approx 1-1/8" dia, OA.	Tuning drive selector cam		USAF 47B41395
O-103		COUPLER, tuning: consists principally of Coupling Bloc, N. American Philips part/dwg No. C3-533, Spline Housing Assembly, USAF dwg No. 47B41414, Small Drive Gear, USAF dwg No. 47A41916, Drive Gear Assembly N. American Philips part/dwg No. AX-2146, Coupling Cover, USAF dwg No. 47B41409, Cap, N. American Philips part/dwg No. A1-2333, and Bearing, New Departure part No. 77-R-4-XIE; right angle shape; approx 5-1/8" lg, 3-3/16" wide, 2" deep; mounts to Coupling Spacer by three 0.144" dia holes.	Couples Control Panel C-758/A to Radio Compass Unit R-101 /ARN-6 or R-101A/ ARN-6 through tuning shaft	N. American Philips CX-554-A	
O-104	— — 1600-287864056	CRANK, hand: consists of Tuning Crank Arm, N. American Philips part/dwg No. B2-803-3, and Tuning Crank Knob, USAF dwg No. No. 47A1365; black anodized aluminum alloy arm, black molded plastic knob; approx 2-11/16" lg, 1" wide, 1-9/16" high; mounts to tuning shaft by two 8-32, AN565D8H8, set screws.	Tuning vcrank	N. American Philips BX-968-A	
O-105		GEAR: spur; aluminum alloy; consists of 1 large and 1 small gear, drive-fitted and staked together; straight teeth; large gear—122 teeth, 56 pitch, 2.178" PD; small gear—30 teeth, 56 pitch, 0.536" PD; 2.214" OD, 0.25" ID, 0.312" thick; straight face; mounts on Idler Gear Bearing, USAF dwg No. 47A-41393.	Drives dial gear		USAF 47B41917

TABLE OF REPLACEABLE PARTS (Continued)

Model: Radio Compass AN/ARN-6 **Major Assembly: Control Panel C-758/A**

Reference Symbol	*Army Stock No. Navy Type No. British Ref. No.*	*Name of Part and Description*	*Function*	*Mfr. and Designation or JAN No.*	*Drawing or Spec. No.*
O-106		GEAR: spur; aluminum alloy; straight teeth; 173 teeth; 56 pitch, 3.089" PD; 3.125" OD, 0.375" ID, 0.468" thick; straight face; hub, 1-1/8" OD, 0.375" ID, 0.468" thick; mounts on selector camshaft.	Drives dial		USAF 47B41918
O-107		GEAR: spur; aluminum alloy; straight teeth; 22 teeth; 56 pitch, 0.393" PD; 0.428" OD, 0.250" ID, 5/16" thick; straight face; mounts on gear drive shaft by 2 AN385-60-3 taper pins.	Idler gear drive		USAF 47A41916
R-101		Not Used.			
R-102		Not Used.			
R-103	3Z7470-1 — 3300-394386742	RESISTOR, variable: composition: 3 sect., sect. A-70,000 ohms ±30%; sect. B—10,000 ohms ±50%, sect. C—35,000 ohms ±30%; all sections 2 w dissipation; 2 solder lug terminals on each sect.; each sect. enclosed in metal case 1-11/16" dia by 1-7/8" deep max; round metal shaft 1/4" dia, 3/4" lg from mtg surface; taper-sect. A, 6500 ohms, at 35% clockwise rotation, 3500 ohms at 50%, 1800 ohms at 65%; sect, B, 18 ohms at 35%, 38 ohms at 50%, 80 ohms at 65%; sect. C, 4000 ohms at 35%, 1150 ohms at 50%; 800 ohms at 65%; insulated contact arm; normal torque; bushing 3/8-32 by 7/16" lg; non-turn device located on 17/32" radius at 9 o'clock.	Volume control	Allen-Bradley JJJ17921	USAF 47D41350
R-104		Not Used.			
R-105	3RC20BF131J — —	RESISTOR, fixed: composition; JAN Type RC20BF131J; 130 ohms ±5%, 1/2 w; 0.468" lg, 0.249" dia; insulated, resistant to humidity and salt water immersion; 2 axial wire lead terminals.	Volume control Bridged-T circuit	RC20BF131J	JAN-R-11
R-106		RESISTOR: same as R-105.	Volume control Bridged-T circuit		
R-107	3RC20BF223K — 3300-381168120	RESISTOR, fixed: composition; JAN Type RC20BF223K; 22,000 ohms ±10%; 1/2 w 0.468" lg, 0.249" dia; insulated, resistant to humidity and salt water immersion; 2 axial wire lead terminals.	Tuning indicator limiting	RC20BF223K	JAN-R-11
R-108	3RC30BF821J — 3300-381320960	RESISTOR, fixed: composition; JAN Type RC30BF821J; 820 ohms ±5%, 1 w; 0.750" lg, 0.280" dia; insulated, resistant to humidity and salt water immersion; 2 axial wire lead terminals.	Loop damping	RC30BF821J	JAN-R-11
S-101	3Z9903E-3.33 — 3360-396018138	SWITCH SECTION, rotary: 4 position, 6 contact; phenolic rotor and stator; coin silver alloy rotor blade and contact clips; 1-7/8" lg, 1-9/16" wide; two 0.136" dia mtg holes on 1.562" mtg centers.	Band switch	Oak 35136-H	USAF 47B41352

TABLE OF REPLACEABLE PARTS (Continued)

Model: Radio Compass AN/ARN-6 **Major Assembly: Control Panel C-758/A**

Reference Symbol	*Army Stock No. Navy Type No. British Ref. No.*	*Name of Part and Description*	*Function*	*Mfr. and Designation or JAN No.*	*Drawing or Spec. No.*
S-102		SWITCH, rotary: 5 position; 3 sect.; first sect. 12 contacts, second sect. 8 contacts; first 2 sect. laminated phenolic body, coin silver alloy rotor blades, spring silver alloy contacts; third sect. dpst ac switch, 1 amp at 250 v, 3 amp at 125 v, on in position 5 only; 1-15/16" lg, 1-9/16" wide, 3-1/4" deep OA; counterclockwise spring return from position 5 to 4; single hole mtg; bushing 3/8-32 by 1-3/16" lg; rd metal shaft 1/4" dia, 3/8" lg beyond bushing.	Function selector "OFF-COMP-ANT-LOOP-CONT"	N. American Philips C3-536-A	
S-103		SWITCH, rotary: single pole, 170° rotation, circuit closed at mid-point of rotation; coin silver alloy rotor blades, spring silver alloy contacts; laminated phenolic body, 1-7/8" lg, 1-3/4" wide, 3" deep, OA; single hole mtg; bushing 3/8-32 by 1/4" lg; 1/4" dia by 7/16" lg round metal shaft; includes variable resistor.	Loop L-R control	N. American Philips BX-917	
S-104		SWITCH, toggle: spst; 3 amp, 250 v; phenolic body, 1" lg, 1/2" wide, 1/2" high; 1/2" lg bat handle; solder lug terminals; single hole mtg; bushing 15/32-32 by 15/32" lg; black oxide finish on exposed parts; lubrication at 55°C.	CW-VOICE switch	Cutler-Hammer KSP-15	
S-105		SWITCH SECTION, rotary: laminated phenolic rotor and stator; coin silver rotor blade, spring silver stator clips; 2 short contact clips, one dummy clip; 1.843" lg, 1.718" wide, 0.078" thick; two 0.128" dia mtg holes on 1.562" mtg centers.	Part of S-103		USAF 47B41356

RESISTORS

Ref.	Value
R-100	2,700
R-101	220,000
R-102	390
R-103	1,000
R-104	1 meg
R-105	680
R-106	220,000
R-107	220,000
R-108	220,000
R-109	47,000
R-110	2,200
R-111	220,000
R-112	220,000
R-113	390
R-114	1 meg
R-115	390
R-116	1,000
R-117	12,000
R-118	680
R-119	220,000
R-120	24
R-121	10
R-122	24
R-123	390
R-124	1,000
*R-125	150,000
R-126	680
R-127	220,000
R-128	24
R-129	10
R-130	24
R-131	22,000
R-132	470
R-133	680
R-134	3,300
R-135	1,000
R-136	220,000
R-137	470
R-138	1,000
R-139	680
R-140	220,000
R-141	150,000
R-142	2,700
R-143	1,000
R-144	680
R-145	680,000
R-146	1 meg
R-147	680,000
R-148	390,000
R-149	470,000
*R-150	470,000
R-151	100,000
R-152	12,000
R-153	3,600
R-154	47,000
R-155	47,000
R-156	680
R-157	2,200
R-158	470
R-159	2,200
R-160	1,200
R-161	1,200
R-162	3,300
R-163	6,800
R-164	3,300
R-165	6,800
R-166	750
R-167	220
R-168	1 meg
R-169	56,000
R-170	330,000
R-171	56,000
R-172	100,000
R-173	100
R-174	100
R-175	100

RESISTORS

Ref.	Value
R-176	100
R-177	2.2 meg
R-178	2.2 meg
R-179	820,000
*R-180	470,000
R-181	82,000
R-182	4,700
R-183	2.2 meg
R-184	1,000
R-185	220,000
R-186	220,000
R-187	220,000
R-188	470
R-189	470
R-190	560
R-191	560
R-192	100,000
R-193	100,000
R-194	47
R-195	1,200
R-196	1.2 meg
R-197	27,000
R-199	25
R-301	22,000
R-302A	70,000 var.
B	10,000 var.
C	35,000 var.
R-303	150
R-304	130
R-306	15,000 var.
2R-307	1,500
R-401	40
R-1100	220,000
R-1101	500 var.
R-1102	1 meg
R-1103	18,000
R-1104	4,700
R-1105	50,000 var.
R-1106	220,000
R-1107	120,000

CAPACITORS

Ref.	Value
C-101	.01 uf
C-102	18
C-103	4 to 30
C-104	4 to 30
C-105	12
C-106	4 to 30
C-107	4 to 30
C-108	24
C-109	12
C-110	150
C-111	unused
C-112	.5 uf per sec.
C-113	75
C-114	20
C-115	240
C-116	240
C-117	.25 uf
C-118	.25 uf
C-119	.01 uf
C-120	.01 uf
C-121	18
C-122	2,000
C-123	4 to 30
C-125	4 to 30
C-126	4 to 30
C-127	10
C-128	.25 uf
C-129	.05 uf
C-130	4 to 30

CAPACITORS

Ref.	Value
C-131	.01 uf
C-132	15
C-133	24
C-134	12
C-135	.5 uf per sec.
C-136	150
C-137	200
C-138	18
C-139	75
C-140	.01 uf
C-141	2
C-142	4 to 30
C-143	4 to 30
C-144	4 to 30
C-145	4 to 30
C-146	.25 uf
C-147	12
C-148	18
C-149	24
C-150	.01 uf
C-151	150
C-152	200
C-153	18
C-154	75
C-155	1,000
C-156	2
C-157	4 to 30
C-158	4 to 30
C-159	4 to 30
C-160	4 to 30
C-161	.25 uf
C-162	12
C-163	24
C-164	18
C-165	.01 uf
C-166	.25 uf
C-167	.25 uf
C-168	6,000
C-169	7 to 45
C-170	200
C-171	200
C-172	200
C-173	.25 uf
C-174	20
C-175	20
C-176	300
C-177	300
C-178	7 to 45
C-179	300
C-180	.25 uf
C-181	.25 uf
C-182	200
C-183	20
C-184	7 to 45
C-185	200
C-186	200
C-187	20
C-188	300
C-189	300
C-190	7 to 45
C-191	300
C-192	15
C-193	.25 uf
C-194	.01 uf
C-195	.25 uf
C-196	1000
C-197	200
C-198	350
C-199	75
C-501	.1 uf
C-1100	1000
C-1101	300
C-1102	100
C-1103	.01 uf
C-1104	.01 uf
C-1105	.01 uf

CAPACITORS

Ref.	Value
C-1106	55
C-1107	150
C-1108	.25 uf
C-1109	240
C-1110	4 to 30
C-1111	4 to 30
C-1112	38
C-1113	4 to 30
C-1114	24
C-1115	4 to 30
C-1116	240
C-1117	.25 uf
C-1118	680
C-1119	560
C-1120	830
C-1121	270
C-1122	24
C-1123	240
C-1124	.25 uf
C-1125	.1 uf
C-1126	50 uf
C-1127	50 uf
C-1128	200
C-1129	350
C-1130	20
C-1131	2
C-1132	.25 uf
C-1133	150
C-1134	100
C-1135	100
C-1136	.01 uf
C-1137	.02 uf
C-1138	.01 uf
C-1139	1,000
C-1140	.1 uf
C-1141	1,000
C-1142	.02 uf
C-1143	.01 uf
C-1144	1,000
C-1145	.05 uf
C-1146	.1 uf
C-1147	.1 uf
C-1148	.01 uf
C-1149	.25 uf
C-1150A	1 uf
B	2 uf
C-1151	.15 uf
C-1152	1,000
C-1153	1,000
C-1154	1,000
C-1155	.1 uf
C-1156	.05 uf
C-1157	.25 uf
C-1158	.05 uf
C-1159	.01 uf
C-1160	.01 uf
C-1161	.01 uf
C-1162	.15 uf
C-1163	.25 uf
C-1164	.05 uf
C-1165	.05 uf
C-1166	500
C-1167	500
C-1168	2 uf
C-1169	.05 uf
C-1170	.1 uf
C-1171	.05 uf
C-1172	300 uf
C-1173	.25 uf
C-1174	10
C-1175	15
C-1176	30
C-1177	10
C-1178	1,000
C-1179	.25 uf
C-1180	3,000

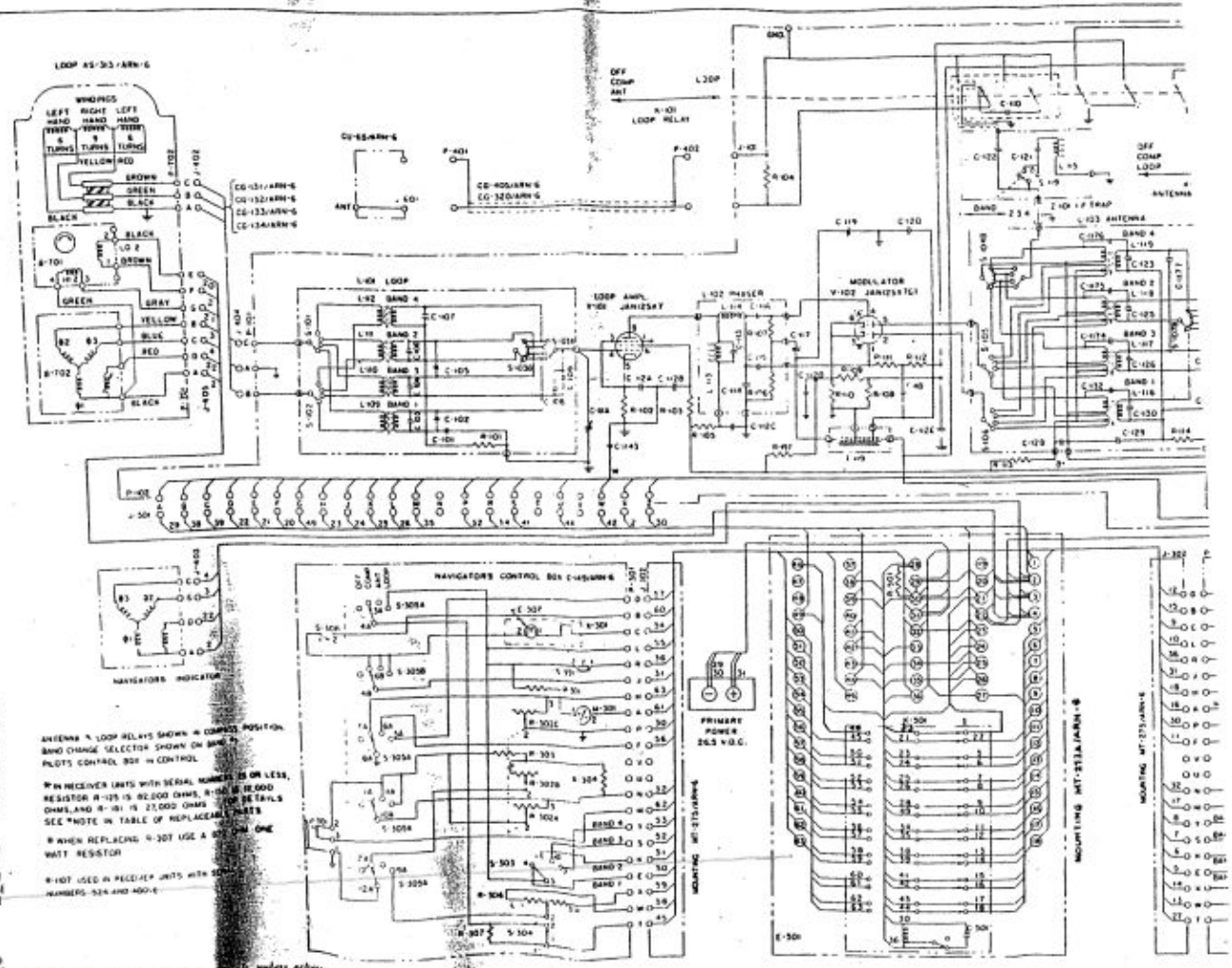

ANTENNA & LOOP RELAYS SHOWN IN COMPASS POSITION.
BAND CHANGE SELECTOR SHOWN ON BAND 4.
PILOTS CONTROL BOX IN CONTROL.

*IN RECEIVER UNITS WITH SERIAL NUMBERS 15 OR LESS, RESISTOR R-125 IS 82,000 OHMS, R-150 IS 18,000 OHMS, AND R-180 IS 27,000 OHMS. FOR DETAILS SEE *NOTE IN TABLE OF REPLACEABLE PARTS.

*WHEN REPLACING R-307 USE A 2000 OHM ONE WATT RESISTOR.

R-107 USED IN RECEIVER UNITS WITH SERIAL NUMBERS 524 AND 400-6.

NOTE: Values in ohms or microfarads, unless otherwise noted.

Figure 8-1. Radio Compass AN/ARN-6, Complete Schematic Diagram, Using Radio Compass Unit R-101/ARN-6

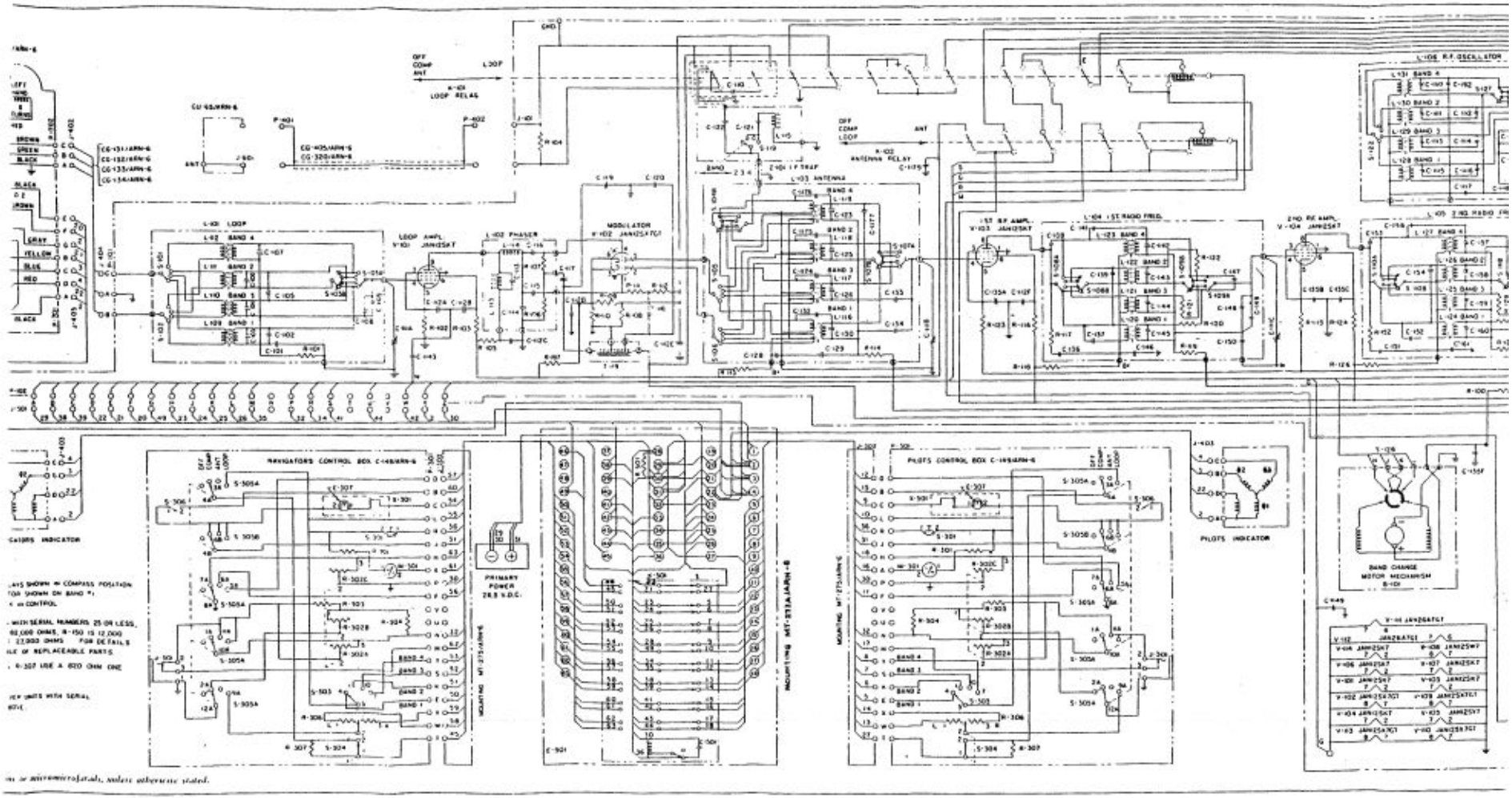

ns or microfarads, unless otherwise stated.

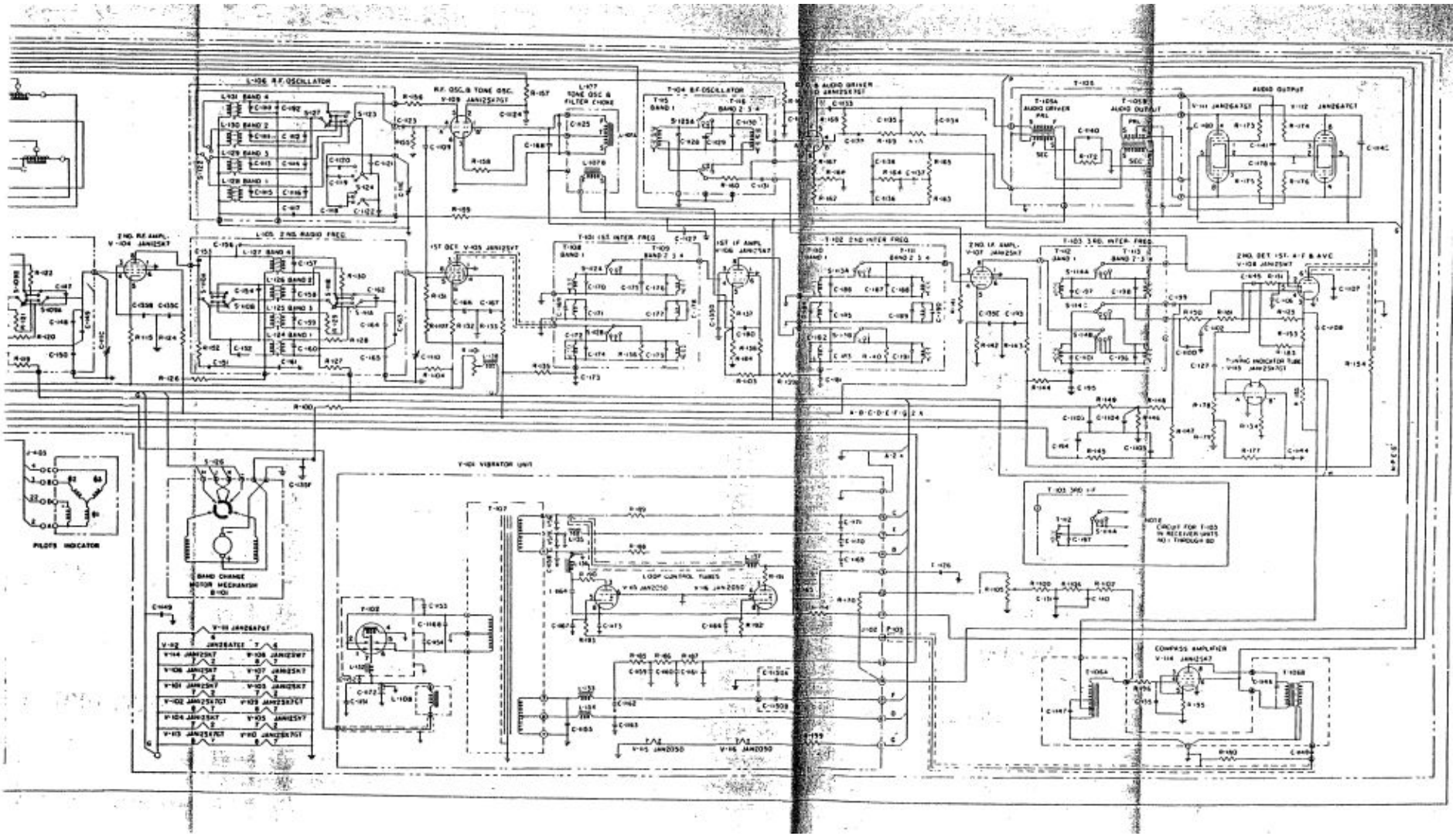
L-106 R.F. OSCILLATOR
R.F. OSC. & TONE OSC.
L-107 TONE OSC. & FILTER CHOKE
T-104 R.F. OSCILLATOR
AUDIO DRIVER
T-105A AUDIO DRIVER
T-105B AUDIO OUTPUT
AUDIO OUTPUT
2ND. RF AMPL.
L-105 2ND. RADIO FREQ.
1ST OSC.
T-101 1ST. INTER. FREQ.
1ST IF AMPL.
T-102 2ND INTER. FREQ.
2ND IF AMPL.
T-103 3RD. INTER. FREQ.
2ND. DET. 1ST. A-F & AVC
TUNING INDICATOR TUBE
PILOTS INDICATOR
BAND CHANGE MOTOR MECHANISM
V-101 VIBRATOR UNIT
LOOP CONTROL TUBES
COMPASS AMPLIFIER
T-103 3RD I.F.
NOTE CIRCUIT FOR T-103 IN RECEIVER UNITS NO. THROUGH 80

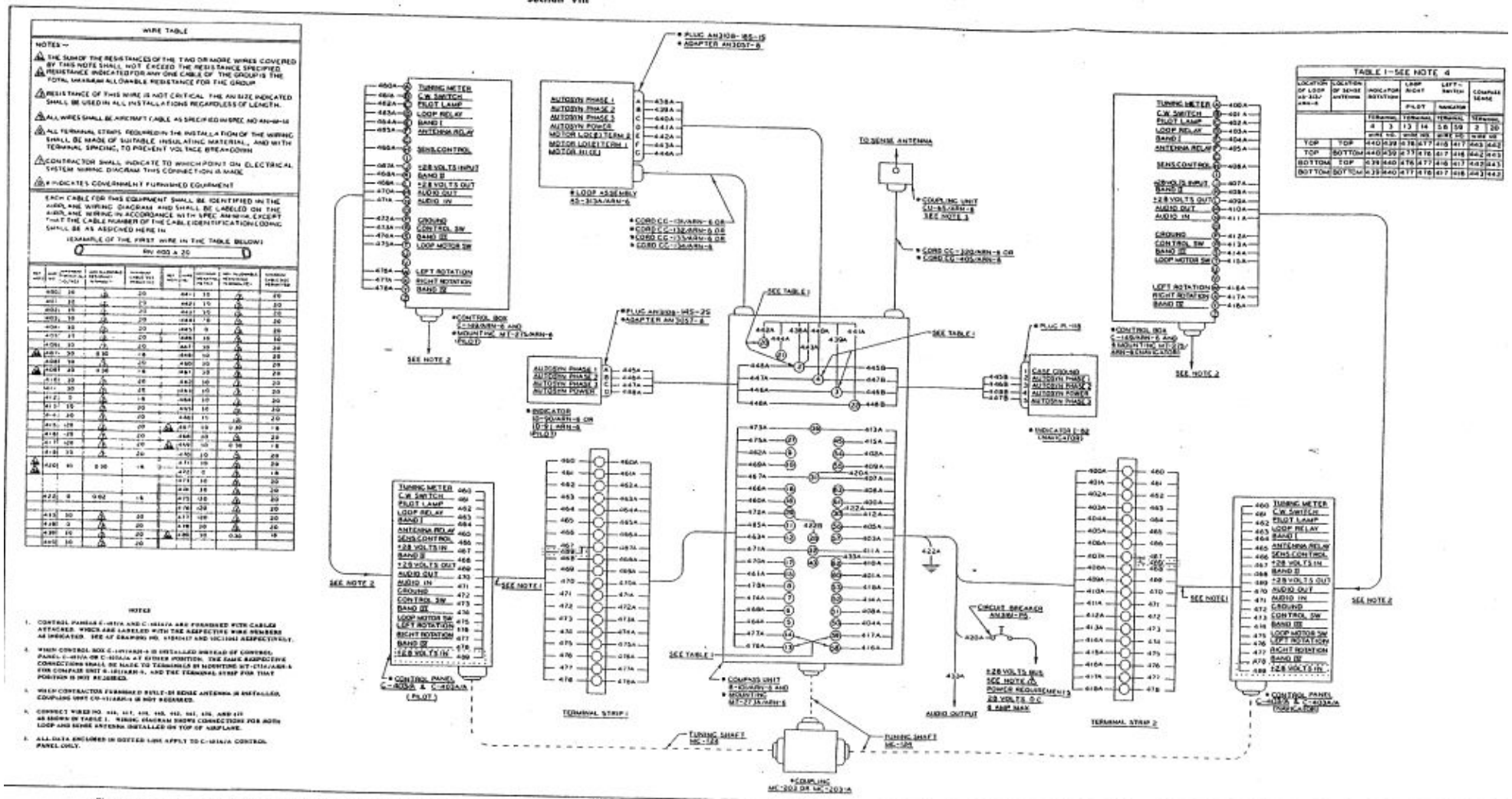

Figure 8-1A. Radio Compass AN/ARN-6, Complete Wiring Diagram, Using Radio Compass Unit R-101/ARN-6, Dual Control

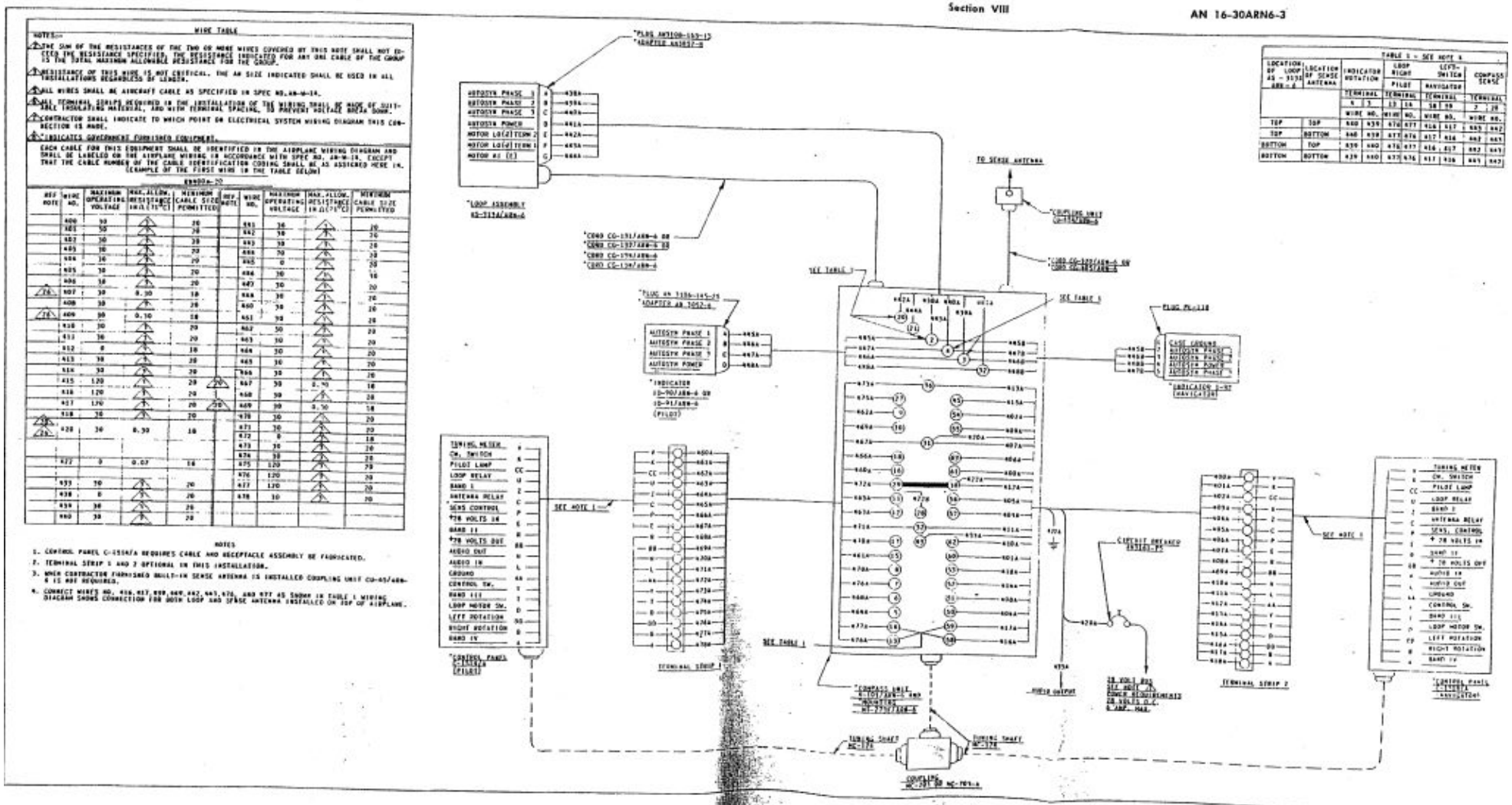

Figure 8-18. Radio Compass AN/ARN-6, Complete Wiring Diagram When Using Radio Compass Receiver R-101/ARN-6 and Control Panel C-1514/A, Dual Control

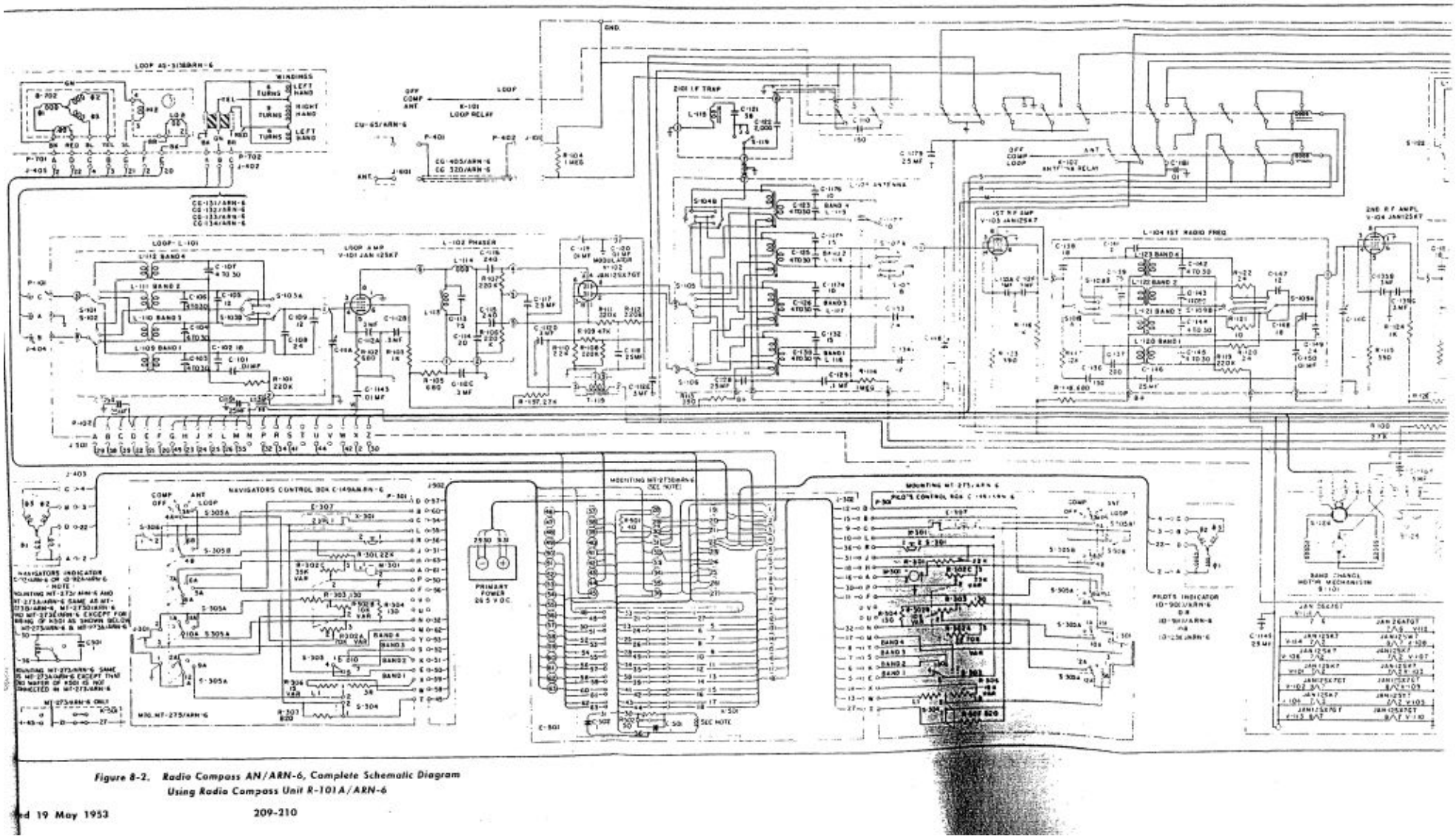

Figure 8-2. Radio Compass AN/ARN-6, Complete Schematic Diagram Using Radio Compass Unit R-101A/ARN-6

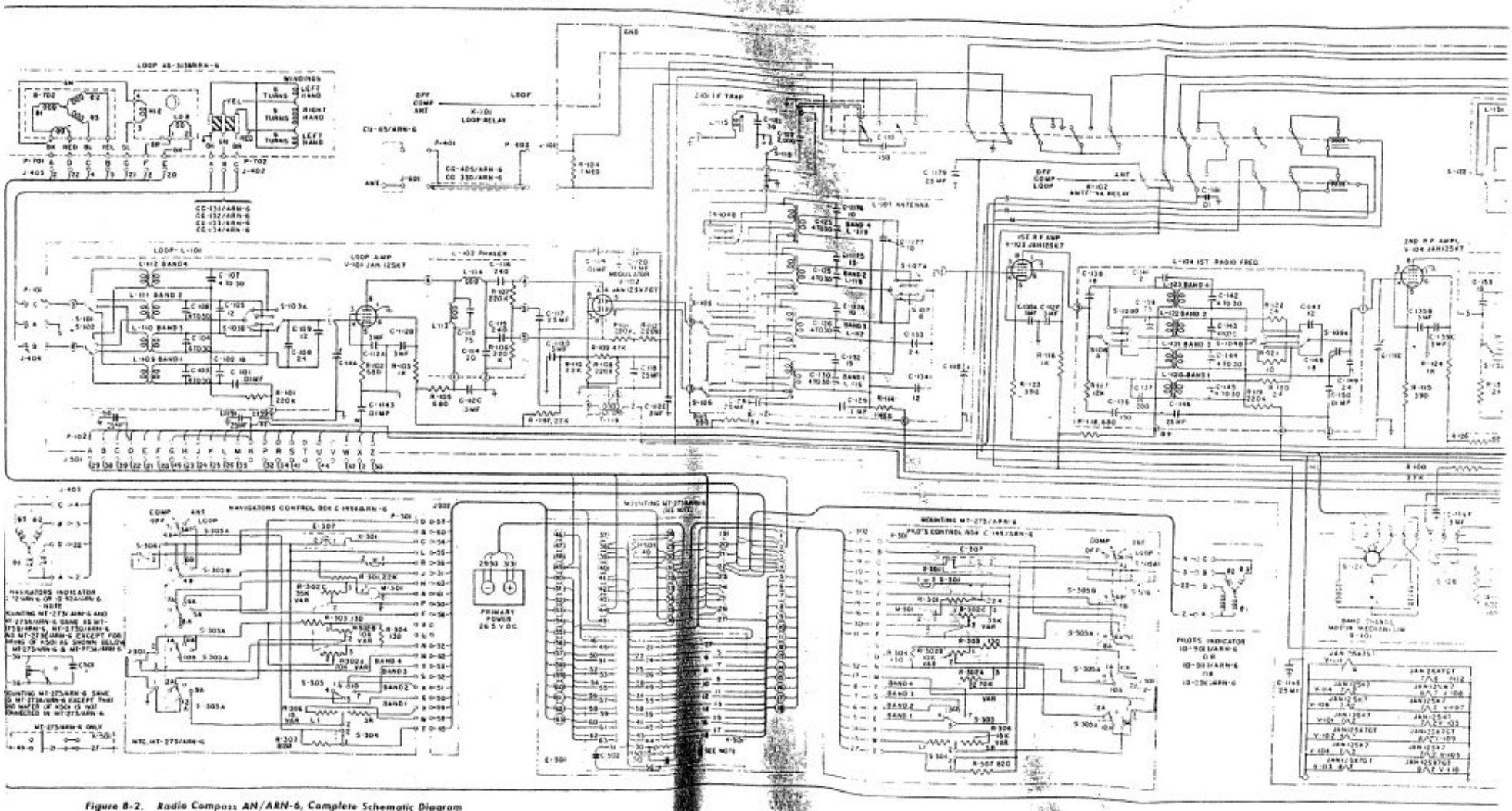

Figure 8-2. Radio Compass AN/ARN-6, Complete Schematic Diagram Using Radio Compass Unit R-101A/ARN-6

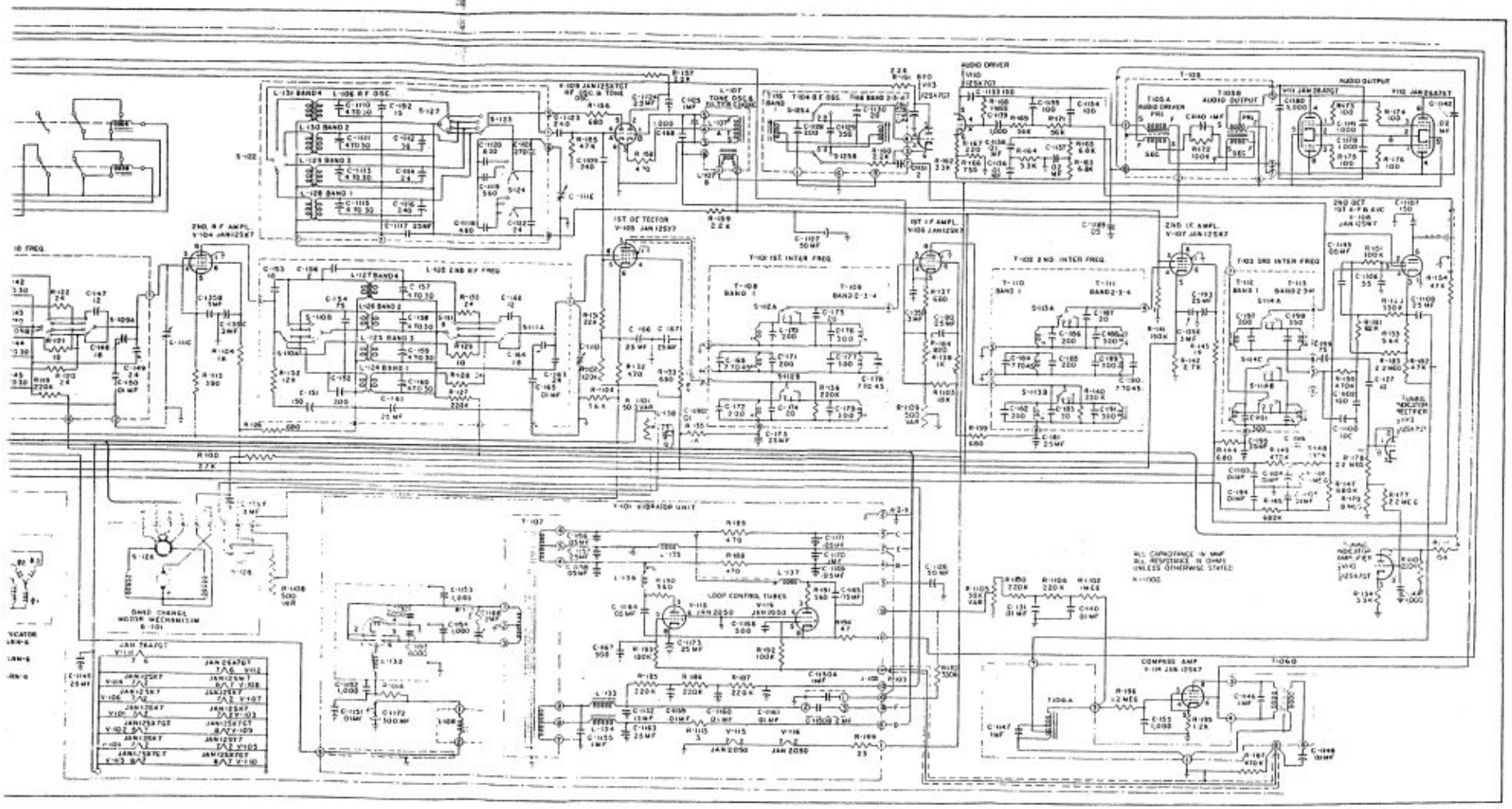
AUDIO DRIVER
AUDIO OUTPUT
2ND R F AMPL.
1ST OF TEETON
1ST I F AMPL.
2ND I F AMPL.
T-101 1ST INTER FREQ.
T-102 2ND INTER FREQ.
T-103 3RD INTER FREQ.
T-101 VIBRATOR UNIT
LOOP CONTROL TUBES
BAND CHANGE NOISE MECHANISM
COMPASS AMP
ALL CAPACITANCE IN MMF
ALL RESISTANCE IN OHMS
UNLESS OTHERWISE STATED

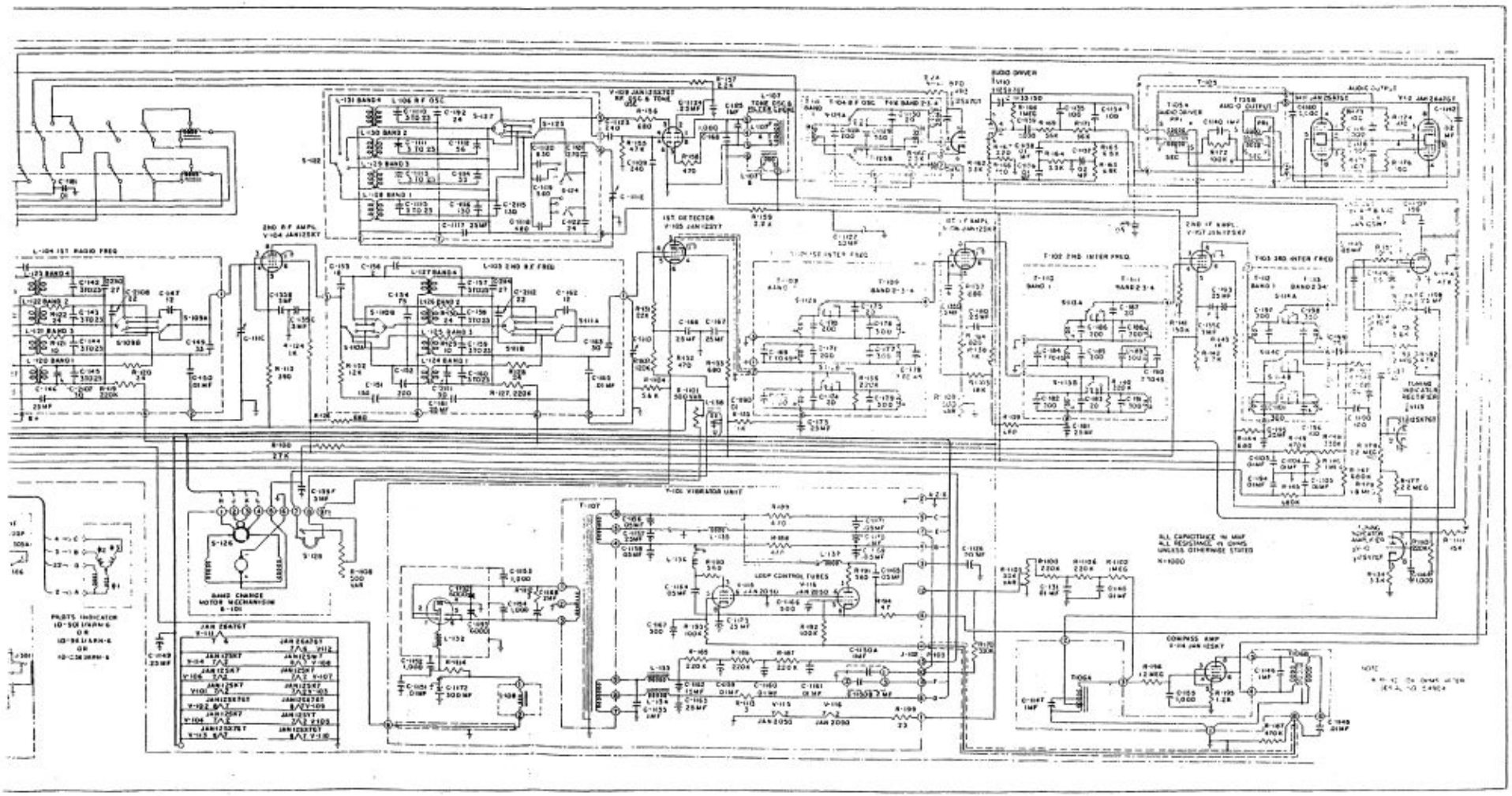
AUDIO DRIVER
AUDIO OUTPUT
2ND RF AMPL.
1ST DETECTOR
1ST IF AMPL.
2ND IF AMPL.
2ND INTER FREQ.
3RD INTER FREQ.
VIBRATOR UNIT
LOOP CONTROL TUBES
COMPASS AMP.
BAND CHANGE MOTOR MECHANISM
ALL CAPACITANCE IN MMF
ALL RESISTANCE IN OHMS
UNLESS OTHERWISE STATED

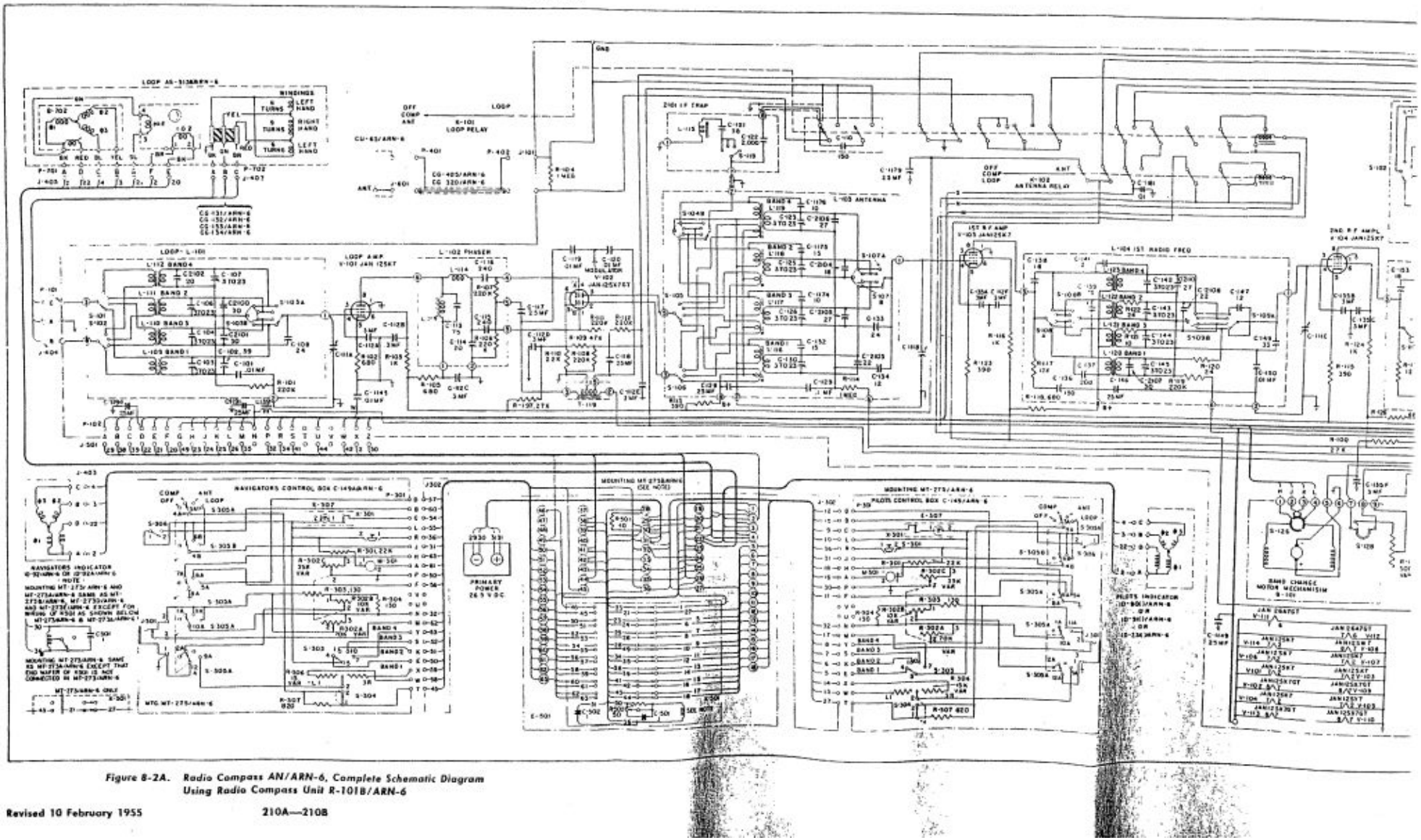

Figure 8-2A. Radio Compass AN/ARN-6, Complete Schematic Diagram Using Radio Compass Unit R-101B/ARN-6

WIRE TABLE I

△ NOTES (GENERAL NOTES) LISTED ON W/AD DRAWING NO AE2504 SHALL APPLY TO THIS DRAWING WHEN APPLICABLE AND/OR AS INDICATED ON THIS DRAWING

METHOD OF IDENTIFYING WIRES IN TABLE BELOW

2 BANDS 2

REF NOTE	WIRE NO.	MAXIMUM OPERATING VOLTAGE	CONDUCTED CURRENT AMPERES	MAX ALLOWABLE VOLTAGE DROP VOLTS	MINIMUM CABLE SIZE PERMITTED	REF NOTE	WIRE NO.	MAXIMUM OPERATING VOLTAGE	CONDUCTED CURRENT AMPERES	MAX ALLOWABLE VOLTAGE DROP VOLTS	MINIMUM CABLE SIZE PERMITTED
	400A	50	0.002	△	22		460A	50	0.002	△	22
	401A	50	0.0008	△	22		461A	50	0.0008	△	22
	402A	50	0.1	△	22		462A	50	0.1	△	22
	403A	50	1.28	1.0	22		463A	50	1.28	1.0	22
	404A	50	0.07	0.5	18		464A	50	0.07	0.44	20
	405A	50	1.28	1.0	22		465A	50	1.28	1.0	22
	406A	50	0.01	△	22		466A	50	0.01	△	22
	407A	50	4.1	TABLE II	20		467A	50	4.1	TABLE II	20
	408A	50	0.07	0.5	20		468A	50	0.07	0.44	20
	409A	50	1.34	0.5	20		469A	50	1.34	0.44	20
	410A	50	0.05	△	22		470A	50	0.05	△	22
	411A	50	0.05	△	22		471A	50	0.05	△	22
	412A	0	1.56	0.1	20		472A	0	1.56	△	20
	413A	50	5.6 (MAX)	5.0	20		473A	50	5.6 (MAX)	△	20
	414A	50	0.07	0.5	20		474A	50	0.07	0.44	20
	415A	108	0.01	△	22		475A	108	0.01	△	22
	416A	154	0.01	△	22		476A	154	0.01	△	22
	417A	154	0.01	△	22		477A	154	0.01	△	22
	418A	50	0.01	0.5	20		478A	50	0.01	0.44	20
	419A	50	4.1	TABLE II	20		479A	50	0.255	△	22
	420A	0	4.1	TABLE II	20						
	421A	0	0.01	△	20		480A	50	0.220	△	22
	422A	50	0.005	△	22		481A	14		△	22
	423A	0		△	22		482A	14		△	22
	424A	14		△	22		483A	14		△	22
	425A	14		△	22		484A	14		△	22
	426A	14		△	22		485A	14		△	22
	427A	14		△	22		486A	14		△	22
	428A	0	0.005	△	22						
	429A	50	0.040	△	22		487C	20		△	22
	430A	0		△	22		488C	20		△	22
	431A	0		△	22		489C	6		△	22
	432A	14		△	22		490C	6		△	22
	433A	14		△	22						
	434A	14		△	22						
	435A	14		△	22						
	436A	14		△	22						
	437A	24		△	22						
	438A	24		△	22						

WIRE TABLE II

CIRCUITS	MAXIMUM ALLOWABLE VOLTAGE DROP VOLTS
420A + 480A + 429A	0.50
420A + 460A + 422A	0.06

TABLE I SEE NOTE 4

LOCATION OF LOOP AS SHOWN IN 6	LOCATION OF SENSE ANTENNA	INDICATOR ROTATION	LOOP LEFT-RIGHT SWITCH				COMPASS SENSE	
		TERMINAL 4 WIRE NO	TERMINAL 5 WIRE NO	TERMINAL 14 WIRE NO	TERMINAL 15 WIRE NO	TERMINAL 19 WIRE NO	TERMINAL 2 WIRE NO	TERMINAL 20 WIRE NO
TOP	TOP	440A	410A	416A	417A	446A	447A	445A	447A
TOP	BOTTOM	440A	410A	417A	416A	447A	446A	442A	445A
BOTTOM	TOP	410A	440A	416A	417A	446A	447A	442A	445A
BOTTOM	BOTTOM	410A	440A	417A	416A	447A	446A	445A	442A

NOTES:

1 – CONTROL PANEL C-1453/ARN-6 (PILOT) FURNISHED WITH CABLES ATTACHED, WHICH ARE LABELED WITH THE RESPECTIVE WIRE NUMBERS AS INDICATED.

3 – WHEN CONTRACTOR FURNISHES BUILT-IN SENSE ANTENNA IS INSTALLED, COUPLING UNIT CU-155/ARN-6 IS NOT REQUIRED. MAKE ALTERNATE CONNECTIONS AS SHOWN IN TABLE I.

4 – CONNECT WIRES NO. 416A, 417A, 410A, 440A, 442A, 445A, 447A, 446A, 447A AS SHOWN IN TABLE I. WIRING DIAGRAM SHOWS CONNECTIONS FOR BOTH LOOP AND SENSE ANTENNA INSTALLED ON TOP OF AIRPLANE.

5 – WHEN COURSE INDICATORS ID-250/ARN OR ID-150A/ARN (PILOT) (CO-PILOT) AND INDICATOR(S) ARE INSTALLED DELETE INDICATORS ID-101/ARN-6 OR INDICATORS ID-91/ARN-6 (PILOT) (NAVIGATOR) AND ASSOCIATED WIRING. REMOVE WIRE NO 436A FROM TERMINAL NO 22 OF THE RADIO COMPASS UNIT FUNCTION BOX IN ADDITION TO ID-250/ARN-6. CONNECT WIRES NO. 444A, 445B, 446C, AND 444B TO TERMINAL STRIP NO 4 AS INDICATED. MAKE ALL OTHER CONNECTIONS AS SHOWN.

6 – RESISTORS SHALL BE IN ACCORDANCE WITH SPEC JAN-R-94 TYPE NO. RC20GF331K (USE CHASSIS, MOUNTING NO RC4H-RC20H (2 CHASS).

7 – RESISTOR RC20GF331K IS ONLY REQUIRED WHEN RADIO COMPASS AN/ARN-6 IS USED WITH INTERCOMMUNICATION SET AN/AIC-16.

8 – WHEN ONLY TWO COURSE INDICATORS ID-250/ARN OR ID-150A/ARN ARE REQUIRED, DELETE COURSE INDICATOR ID-250/ARN OR ID-150A/ARN (CO-PILOT) AND ASSOCIATED WIRING, TERMINAL 14 AND ASSOCIATED RESISTOR, TERMINAL 6 AND ASSOCIATED RESISTOR OF TERMINAL STRIP NO 4.

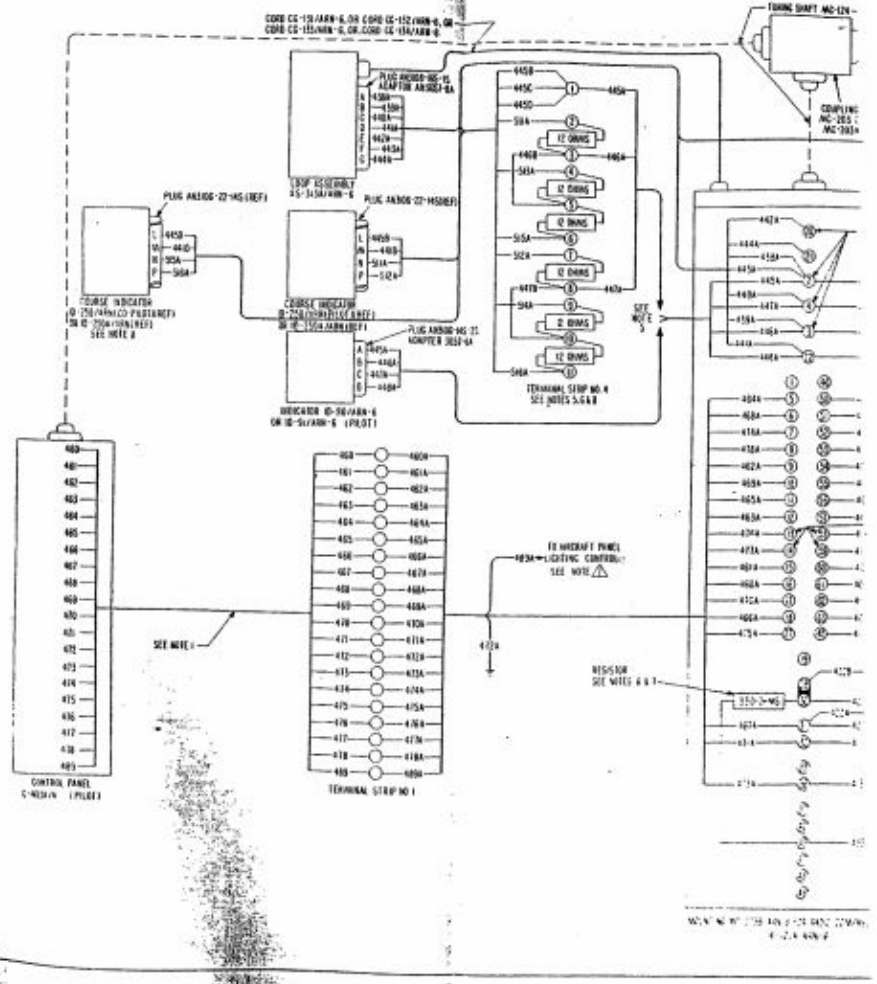

Figure 8-28. Radio Compass AN/ARN-6, Complete Wiring Diagram, Using Radio Compass Receiver R-101A/ARN-6, Dual Control

5 FURNISHED WITH CABLES ATTACHED, WHICH ARE
IE WIRE NUMBERS AS INDICATED.

10 BUILT-IN SENSE ANTENNA IS INSTALLED, COUPLING
BURED. MAKE ALTERNATE CONNECTIONS AS SHOWN

9, 4 35A, 448A, 442A, 443A, 416A & 417A, AS SHOWN
N SHOWS CONNECTIONS FOR BOTH LOOP AND SENSE
ON AIRPLANE.

3-250 ARN OR ID-250 ARN (PILOT) (CO-PILOT)
LED DELETE INDICATORS ID-501 ARN-6 ON
OPT 6 (NAVIGATOR) AND ASSOCIATED WIRING.
IN TERMINAL NO. 22 IF THE RADIO COMPASS UNIT
MT-271 ARN-6. CONNECT WIRES NO. 444A, 441B,
4, STRIP NO. 1 AS INDICATED. MAKE ALL OTHER

ORDANCE WITH SPEC. MIL-W-11 TYPE NO.
TYPE NO. RC-11 AC (20 OHMS).
IS REQUIRED WHEN RADIO COMPASS MN ARN-6
INDICATOR SET AN/ARC-10.

INDICATORS ID-250 ARN OR ID-250 ARN ARE
INDICATOR ID-250 ARN OR ID-250 ARN (CO-PILOT)
SIGNAL 11 AND ASSOCIATED DESIGNATION, TERMINAL
OF TERMINAL STRIP NO. 4.

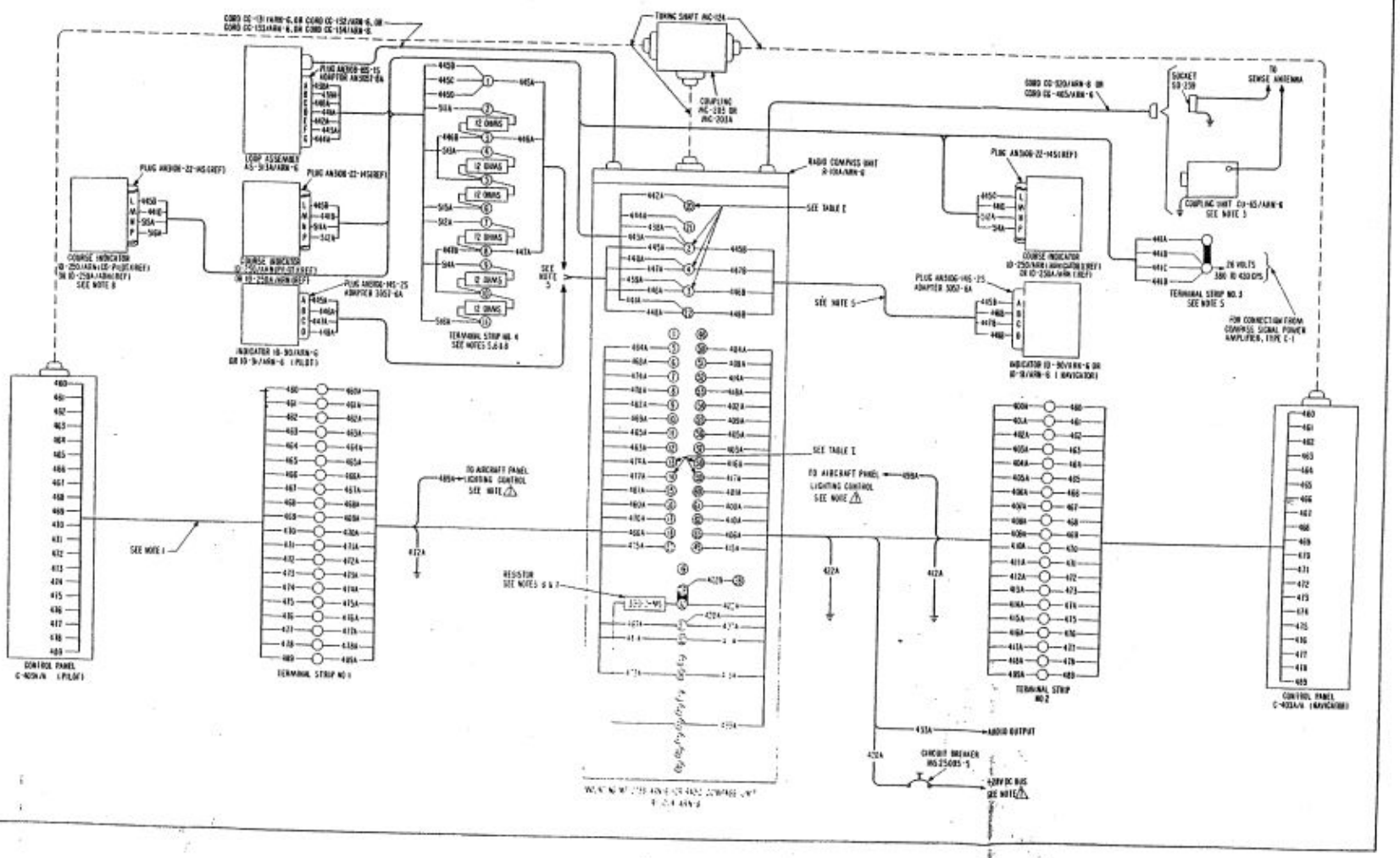

RESISTORS

Ref.	Value
R-100	2,700
R-101	220,000
R-102	390
R-103	1,000
R-104	1 meg
R-105	680
R-106	220,000
R-107	220,000
R-108	220,000
R-109	47,000
R-110	2,200
R-111	220,000
R-112	220,000
R-113	390
R-114	1 meg
R-115	390
R-116	1,000
R-117	12,000
R-118	680
R-119	220,000
R-120	24
R-121	10
R-122	24
R-123	390
R-124	1,000
*R-125	150,000
R-126	680
R-127	220,000
R-128	24
R-129	10
R-130	24
R-131	22,000
R-132	470
R-133	680
R-134	3,300
R-135	1,000
R-136	220,000
R-137	470
R-138	1,000
R-139	680
R-140	220,000
R-141	150,000
R-142	2,700
R-143	1,000
R-144	680
R-145	680,000
R-146	1 meg
R-147	680,000
R-148	330,000
R-149	470,000
*R-150	470,000
R-151	100,000
R-152	12,000
R-153	5,600
R-154	47,000
R-155	47,000
R-156	680
R-157	2,200
R-158	470
R-159	2,200
R-160	2,200
R-161	2,200
R-162	3,300
R-163	6,800
R-164	3,300
R-165	6,800
R-166	750
R-167	220
R-168	1 meg
R-169	56,000
R-170	330,000
R-171	56,000
R-172	100,000
R-173	100
R-174	100
R-175	100

RESISTORS

Ref.	Value
R-176	100
R-177	2.2 meg
R-178	2.2 meg
R-179	820,000
*R-180	470,000
R-181	82,000
R-182	4,700
R-183	2.2 meg
R-184	1,000
R-185	220,000
R-186	220,000
R-187	220,000
R-188	470
R-189	470
R-190	560
R-191	560
R-192	100,000
R-193	100,000
R-194	47
R-195	1,200
R-196	1.2 meg
R-197	27,000
R-199	23
R-501	22,000
R-502A	70,000 var.
B	10,000 var.
C	35,000 var.
R-503	150
R-504	150
R-506	15,000 var.
#R-507	1,500
R-508	40
R-1100	220,000
R-1101	500 var.
R-1102	1 meg
R-1103	18,000
R-1104	4,700
R-1105	50,000 var.
R-1106	220,000
R-1107	120,000

CAPACITORS

Ref.	Value
C-101	.01 uf
C-102	18
C-103	4 to 30
C-104	4 to 30
C-105	12
C-106	4 to 30
C-107	4 to 30
C-108	24
C-109	12
C-110	150
C-111	tuning
C-112	.5 uf per sec.
C-113	75
C-114	20
C-115	240
C-116	240
C-117	.25 uf
C-118	.25 uf
C-119	.01 uf
C-120	.01 uf
C-121	58
C-122	2,000
C-123	4 to 30
C-125	4 to 30
C-126	4 to 30
C-127	10
C-128	.25 uf
C-129	.05 uf
C-130	4 to 30

CAPACITORS

Ref.	Value
C-131	.01 uf
C-132	15
C-133	24
C-134	12
C-135	.5 uf per sec.
C-136	150
C-137	200
C-138	18
C-139	75
C-140	.01 uf
C-141	2
C-142	4 to 30
C-143	4 to 30
C-144	4 to 30
C-145	4 to 30
C-146	.25 uf
C-147	12
C-148	18
C-149	24
C-150	.01 uf
C-151	150
C-152	200
C-153	18
C-154	75
C-155	1,000
C-156	2
C-157	4 to 30
C-158	4 to 30
C-159	4 to 30
C-160	4 to 30
C-161	.25 uf
C-162	12
C-163	24
C-164	18
C-165	.01 uf
C-166	.25 uf
C-167	.25 uf
C-168	6,000
C-169	7 to 45
C-170	200
C-171	200
C-172	200
C-173	.25 uf
C-174	20
C-175	20
C-176	300
C-177	300
C-178	7 to 45
C-179	300
C-180	.25 uf
C-181	.25 uf
C-182	200
C-183	20
C-184	7 to 45
C-185	200
C-186	200
C-187	20
C-188	300
C-189	300
C-190	7 to 45
C-191	300
C-192	15
C-193	.25 uf
C-194	.01 uf
C-195	.25 uf
C-196	100
C-197	200
C-198	350
C-199	75
C-501	.1 uf
C-1100	100
C-1101	300
C-1102	100
C-1103	.01 uf
C-1104	.01 uf
C-1105	.01 uf

CAPACITORS

Ref.	Value
C-1106	55
C-1107	150
C-1108	.25 uf
C-1109	240
C-1110	4 to 30
C-1111	4 to 30
C-1112	58
C-1113	4 to 30
C-1114	24
C-1115	4 to 30
C-1116	240
C-1117	.25 uf
C-1118	480
C-1119	560
C-1120	850
C-1121	270
C-1122	24
C-1123	240
C-1124	.25 uf
C-1125	.1 uf
C-1126	50 uf
C-1127	50 uf
C-1128	200
C-1129	150
C-1130	20
C-1131	2
C-1132	.25 uf
C-1133	150
C-1134	100
C-1135	100
C-1136	.01 uf
C-1137	.02 uf
C-1138	.01 uf
C-1139	1,000
C-1140	.1 uf
C-1141	1,000
C-1142	.02 uf
C-1143	.01 uf
C-1144	1,000
C-1145	.05 uf
C-1146	.1 uf
C-1147	.1 uf
C-1148	.01 uf
C-1149	.25 uf
C-1150A	1 uf
B	2 uf
C-1151	.15 uf
C-1152	1,000
C-1153	1,000
C-1154	1,000
C-1155	.1 uf
C-1156	.05 uf
C-1157	.25 uf
C-1158	.05 uf
C-1159	.01 uf
C-1160	.01 uf
C-1161	.01 uf
C-1162	.15 uf
C-1163	.25 uf
C-1164	.05 uf
C-1165	.05 uf
C-1166	500
C-1167	500
C-1168	2 uf
C-1169	.05 uf
C-1170	.1 uf
C-1171	.05 uf
C-1172	500 uf
C-1173	.25 uf
C-1174	10
C-1175	15
C-1176	10
C-1177	10
C-1178	1,000
C-1179	.25 uf
C-1180	5,000

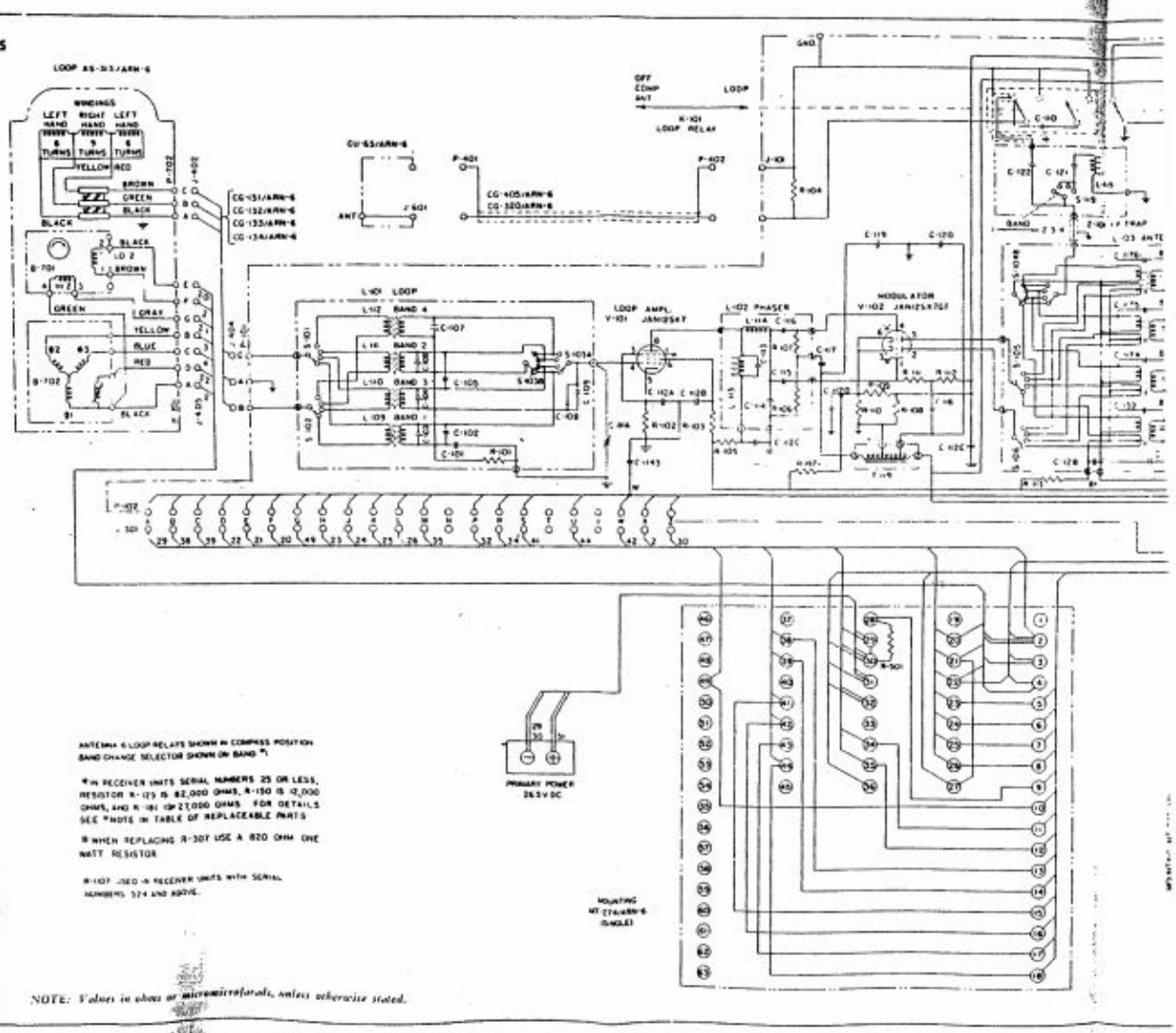

ANTENNA & LOOP RELAYS SHOWN IN COMPASS POSITION
BAND CHANGE SELECTOR SHOWN ON BAND *1.

*IN RECEIVER UNITS SERIAL NUMBERS 25 OR LESS, RESISTOR R-125 IS 82,000 OHMS, R-150 IS 12,000 OHMS, AND R-180 IS 27,000 OHMS. FOR DETAILS SEE *NOTE IN TABLE OF REPLACEABLE PARTS

#WHEN REPLACING R-507 USE A 820 OHM ONE WATT RESISTOR

R-107 USED IN RECEIVER UNITS WITH SERIAL NUMBERS 324 AND ABOVE.

NOTE: Values in ohms or microfarads, unless otherwise stated.

Figure 8-3. Radio Compass AN/ARN-6, Complete Schematic Diagram, Using Radio Compass Unit R-101/ARN-6, Single Control

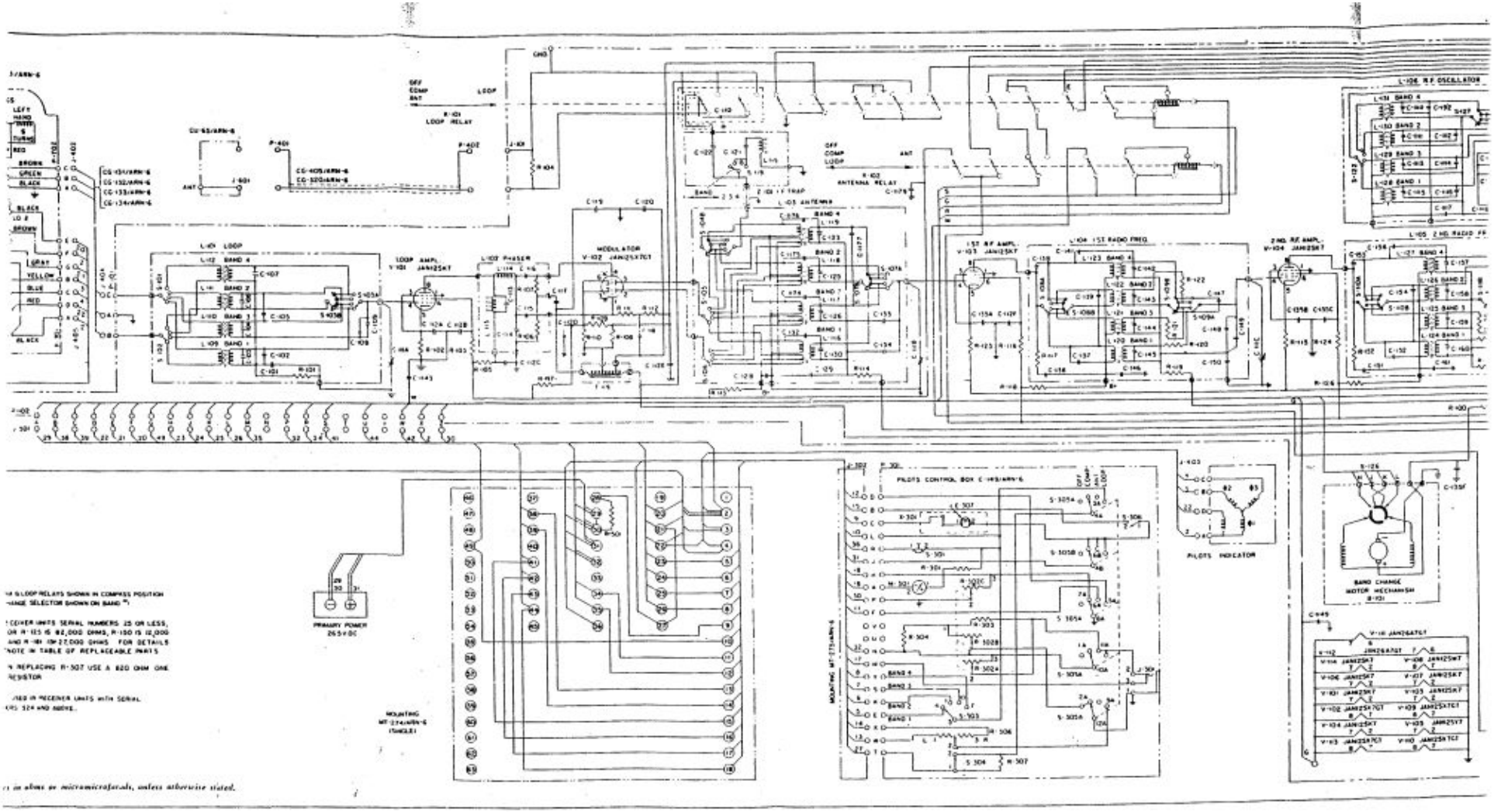

LOOP RELAYS SHOWN IN COMPASS POSITION
CHANGE SELECTOR SHOWN ON BAND "1"

RECEIVER UNITS SERIAL NUMBERS 25 OR LESS, R-125 IS 82,000 OHMS, R-130 IS 12,000 OHMS, R-181 IS 27,000 OHMS. FOR DETAILS SEE NOTE IN TABLE OF REPLACEABLE PARTS

WHEN REPLACING R-307 USE A 820 OHM ONE RESISTOR

USED IN RECEIVER UNITS WITH SERIAL NUMBERS 324 AND ABOVE.

... in ohms or micromicrofarads, unless otherwise noted.

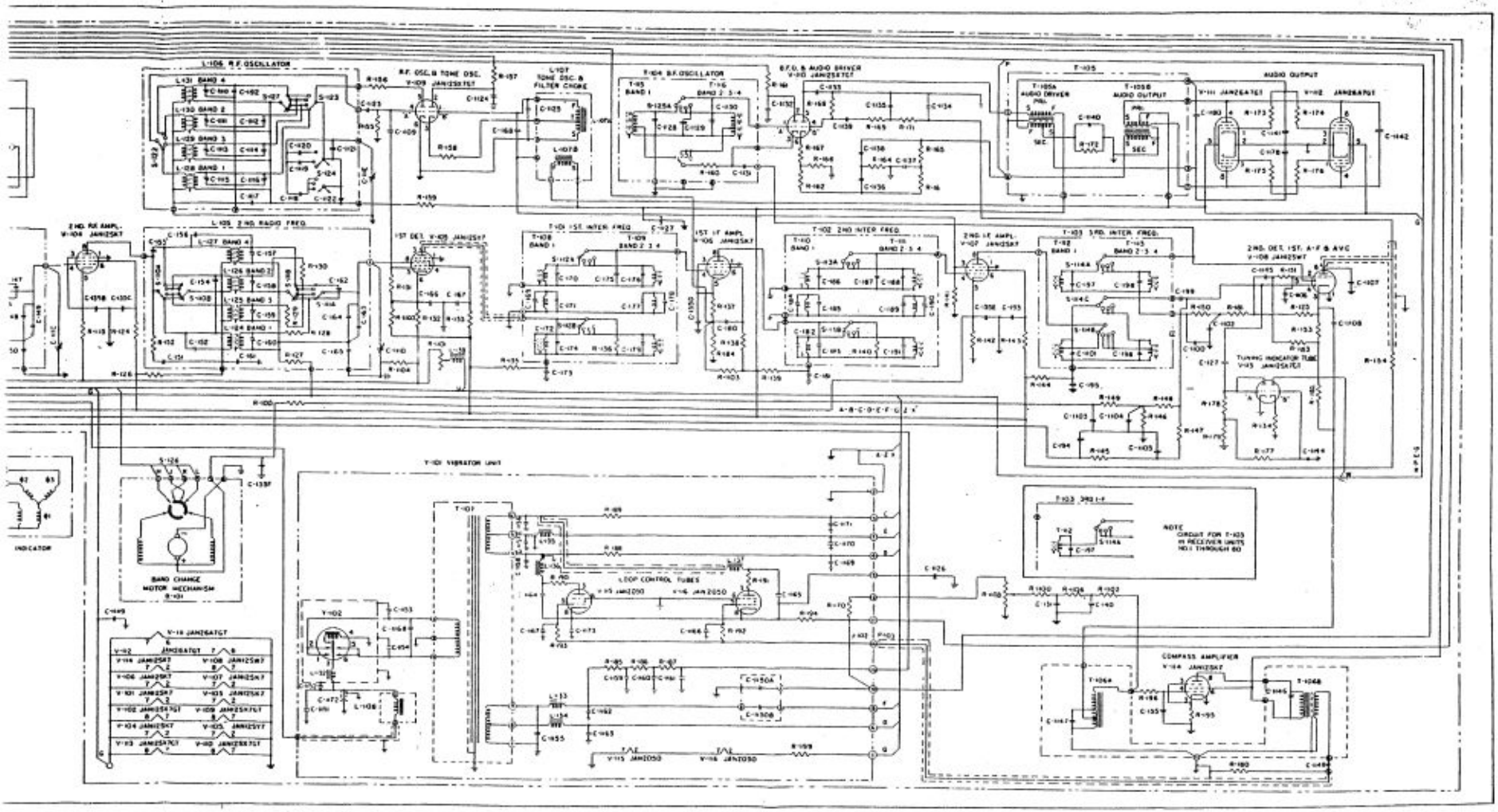
L-106 R.F. OSCILLATOR
R.F. OSC. & TONE OSC.
L-107 TONE OSC. & FILTER CHOKE
T-104 R.F. OSCILLATOR
R.F.O. & AUDIO DRIVER
T-105
AUDIO OUTPUT
L-105 2ND RADIO FREQ.
2ND RF AMPL.
1ST DET.
T-101 1ST INTER FREQ.
1ST IF AMPL.
T-102 2ND INTER FREQ.
2ND IF AMPL.
T-103 3RD. INTER FREQ.
2ND. DET. 1ST. A-F & AVC
TUNING INDICATOR TUBE
INDICATOR
BAND CHANGE MOTOR MECHANISM
T-101 VIBRATOR UNIT
LOOP CONTROL TUBES
COMPASS AMPLIFIER
NOTE
CIRCUIT FOR T-103 IN RECEIVER UNITS NO.1 THROUGH 80

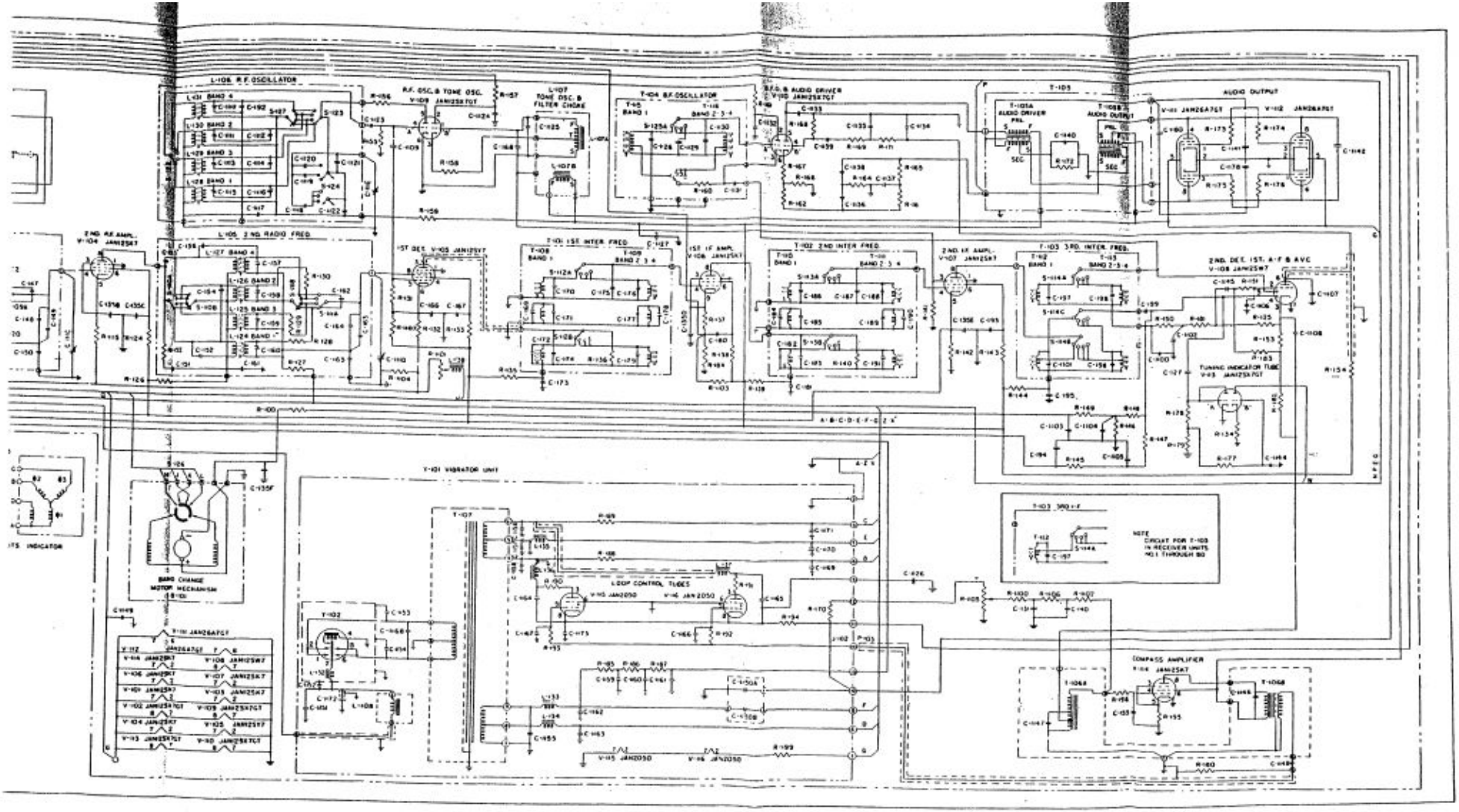
L-106 R.F. OSCILLATOR
R.F. OSC. & TONE OSC.
L-107 TONE OSC. & FILTER CHOKE
T-104 R.F. OSCILLATOR
R.F. & AUDIO DRIVER
T-105
AUDIO OUTPUT
2ND R.F. AMPL.
L-105 2ND RADIO FREQ.
1ST DET.
T-101 1ST INTER. FREQ.
1ST I.F. AMPL.
T-102 2ND INTER. FREQ.
2ND I.F. AMPL.
T-103 3RD. INTER. FREQ.
2ND. DET. 1ST. A.F. & AVC
TUNING INDICATOR TUBE
V-101 VIBRATOR UNIT
BAND CHANGE MOTOR MECHANISM
LOOP CONTROL TUBES
COMPASS AMPLIFIER
NOTE
CIRCUIT FOR T-103 IN RECEIVER UNITS NO.1 THROUGH 50

WIRE TABLE

NOTES:—

⚠ THE SUM OF THE RESISTANCES OF THE TWO OR MORE WIRES COVERED BY THIS NOTE SHALL NOT EXCEED THE RESISTANCE SPECIFIED. THE RESISTANCE INDICATED FOR ANY ONE CABLE OF THE GROUP IS THE TOTAL MAXIMUM ALLOWABLE RESISTANCE FOR THE GROUP.

⚠ RESISTANCE OF THIS WIRE IS NOT CRITICAL. THE AN SIZE INDICATED SHALL BE USED IN ALL INSTALLATIONS REGARDLESS OF LENGTH.

⚠ ALL WIRES SHALL BE AIRCRAFT CABLE AS SPECIFIED IN SPEC. NO AN-W-14.

⚠ ALL TERMINAL STRIPS REQUIRED IN THE INSTALLATION OF THE WIRING SHALL BE MADE OF SUITABLE INSULATING MATERIAL, AND WITH TERMINAL SPACING, TO PREVENT VOLTAGE BREAKDOWN.

⚠ CONTRACTOR SHALL INDICATE TO WHICH POINT ON ELECTRICAL SYSTEM WIRING DIAGRAM THIS CONNECTION IS MADE.

⚠ * INDICATES GOVERNMENT FURNISHED EQUIPMENT.

EACH CABLE FOR THIS EQUIPMENT SHALL BE IDENTIFIED IN THE AIRPLANE WIRING DIAGRAM AND SHALL BE LABELED ON THE AIRPLANE WIRING IN ACCORDANCE WITH SPEC. AN-W-14, EXCEPT THAT THE CABLE NUMBER OF THE CABLE IDENTIFICATION CODING SHALL BE AS ASSIGNED HERE IN.

(EXAMPLE OF THE FIRST WIRE IN THE TABLE BELOW)

AN 420 A 18

REF NOTE	WIRE NO.	MAXIMUM OPERATING VOLTAGE	MAX. ALLOWABLE RESISTANCE (OHMS/M)	MINIMUM CABLE SIZE AWG	REF NOTE	WIRE NO.	MAXIMUM OPERATING VOLTAGE	MAX. ALLOWABLE RESISTANCE (OHMS/M)	MINIMUM CABLE SIZE AWG
⚠	420	30	0.30	18		452	30	⚠	20
						453	30	⚠	20
	422	0	0.30	18		454	30	⚠	20
						455	30	⚠	20
	433	30	⚠	20		456	30	⚠	20
	438	0	⚠	20	⚠	457	30	0.30	18
	439	30	⚠	20		458	30	⚠	20
	440	30	⚠	20	⚠	459	30	0.30	18
	441	30	⚠	20		470	30	⚠	20
	442	30	⚠	20		471	30	⚠	20
	443	30	⚠	20		472	5	⚠	18
	444	30	⚠	20		473	30	⚠	20
	445	0	⚠	20		474	30	⚠	20
	446	30	⚠	20		475	120	⚠	20
	447	30	⚠	20		476	120	⚠	20
	448	30	⚠	20		477	120	⚠	20
	449	30	⚠	20		478	30	⚠	20
	450	30	⚠	20	⚠	479	30	0.30	18

NOTES

1. CONTROL PANELS C-403/A AND C-403/A/A ARE FURNISHED WITH CABLES ATTACHED, WHICH ARE LABELLED WITH THE RESPECTIVE WIRE NUMBERS AS INDICATED. SEE AF DRAWING NO. 4704427 AND SCE13942 RESPECTIVELY.
2. WHEN CONTROL BOX C-149/ARN-6 IS INSTALLED INSTEAD OF CONTROL PANEL C-403/A OR C-403/A/A, THE SAME RESPECTIVE CONNECTIONS SHALL BE MADE TO TERMINALS IN MOUNTING MT-274/ARN-6 FOR COMPASS UNIT R-101/ARN-6, AND THE TERMINAL STRIP IS NOT REQUIRED.
3. WHEN CONTRACTOR FURNISHED BUILT-IN SENSE ANTENNA IS INSTALLED, COUPLING UNIT CU-65/ARN-6 IS NOT REQUIRED.
4. CONNECT WIRES NO. 439, 440, 442, 443, 456 AND 457 AS SHOWN IN TABLE I. WIRING DIAGRAM SHOWS CONNECTIONS FOR BOTH LOOP AND SENSE ANTENNA INSTALLED ON TOP OF AIRPLANE.
5. ALL DATA ENCLOSED IN DOTTED LINE APPLY TO C-403/A/A CONTROL PANEL ONLY.

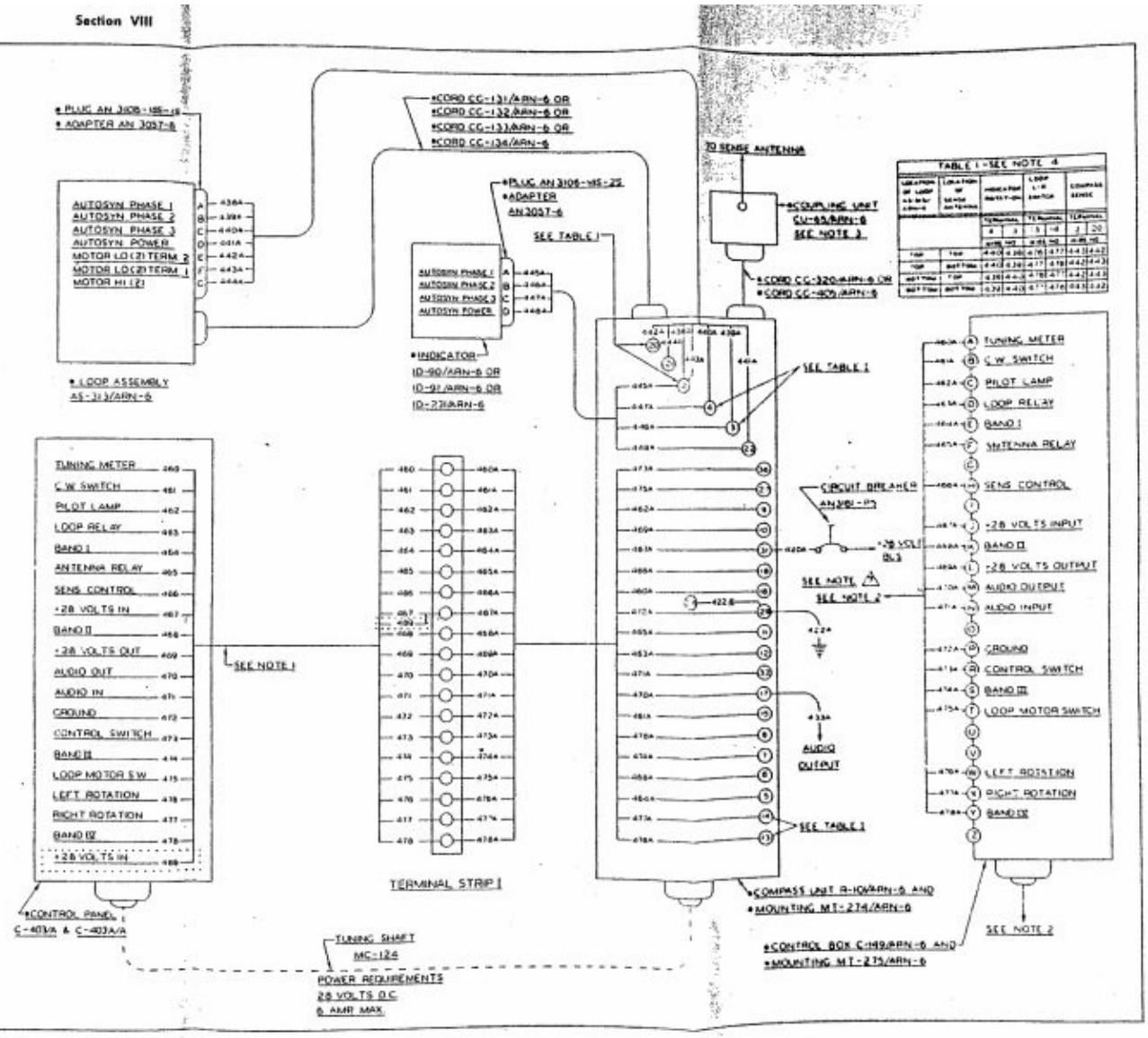

Figure 8-3A. Radio Compass AN/ARN-6, Complete Wiring Diagram, Using Radio Compass Unit R-101/ARN-6, Single Control

WIRE TABLE

NOTES:-

1. THE SUM OF THE RESISTANCES OF THE TWO OR MORE WIRES COVERED BY THIS NOTE SHALL NOT EXCEED THE RESISTANCE SPECIFIED. THE RESISTANCE INDICATED FOR ANY ONE CABLE OF THE GROUP IS THE TOTAL MAXIMUM ALLOWABLE RESISTANCE FOR THE GROUP.
2. RESISTANCE OF THIS WIRE IS NOT CRITICAL. THE AN SIZE INDICATED SHALL BE USED IN ALL INSTALLATIONS REGARDLESS OF LENGTH.
3. ALL WIRES SHALL BE AIRCRAFT CABLEAS SPECIFIED IN SPEC. AN-W-16.
4. ALL TERMINAL STRIPS REQUIRED IN THE INSTALLATION OF THE WIRING SHALL BE MADE OF SUITABLE INSULATING MATERIAL, AND WITH TERMINAL SPACING, TO PREVENT VOLTAGE BREAK DOWN.
5. CONTRACTOR SHALL INDICATE TO WHICH POINT ON ELECTRICAL SYSTEM WIRING DIAGRAM THIS CONNECTION IS MADE.
6. *INDICATES GOVERNMENT FURNISHED EQUIPMENT.

EACH CABLE FOR THIS EQUIPMENT SHALL BE IDENTIFIED IN THE AIRPLANE WIRING DIAGRAM AND SHALL BE LABELED ON THE AIRPLANE WIRING IN ACCORDANCE WITH SPEC. AN-W-16, EXCEPT THAT THE CABLE NUMBER OF THE CABLE IDENTIFICATION CODING SHALL BE AS ASSIGNED HEREIN.

(EXAMPLE OF THE FIRST WIRE IN THE TABLE BELOW.)

AN 420 A 18

REF. NOTE	WIRE NO.	MAXIMUM OPERATING VOLTAGE	MAX. ALLOW. RESISTANCE IN Ω (75°C)	MINIMUM CABLE SIZE PERMITTED	REF. NOTE	WIRE NO.	MAXIMUM OPERATING VOLTAGE	MAX. ALLOW. RESISTANCE IN Ω (75°C)	MINIMUM CABLE SIZE PERMITTED
1	420	30	0.30	18		462	30	1	20
	422	0	0.02	16		463	30	1	20
						464	30	1	20
	437	30	1	20		465	30	1	20 —
	438	0	1	20		466	30	1	20
	439	30	1	20	1	467	30	0.30	18
	440	30	1	20		468	30	1	20
	441	30	1	20	1	469	30	0.30	18
	442	30	1	20		470	30	1	20
	443	30	1	20		471	30	1	20
	444	30	1	20		472	0	1	18
	445	0	1	20		473	30	1	20
	446	30	1	20		474	30	1	20
	447	30	1	20		475	120	1	20
	448	30	1	20		476	120	1	20
	460	30	1	20		477	120	1	20
	461	30	1	20		478	30	1	20

NOTES

1. CONTROL PANEL C-1514/A REQUIRES A CABLE AND RECEPTACLE ASSEMBLY TO BE FABRICATED.
2. TERMINAL STRIP 1 OPTIONAL EQUIPMENT.
3. WHEN CONTRACTOR FURNISHED BUILT-IN SENSE ANTENNA IS INSTALLED, COUPLING UNIT CU-65[ ]/ARN-6 IS NOT REQUIRED.
4. CONNECT WIRES NO. 439, 440, 442, 443, 476, AND 477 AS SHOWN IN TABLE 1. WIRING DIAGRAM SHOWS CONNECTIONS FOR BOTH LOOP AND SENSE ANTENNA INSTALLED ON TOP OF AIRPLANE.

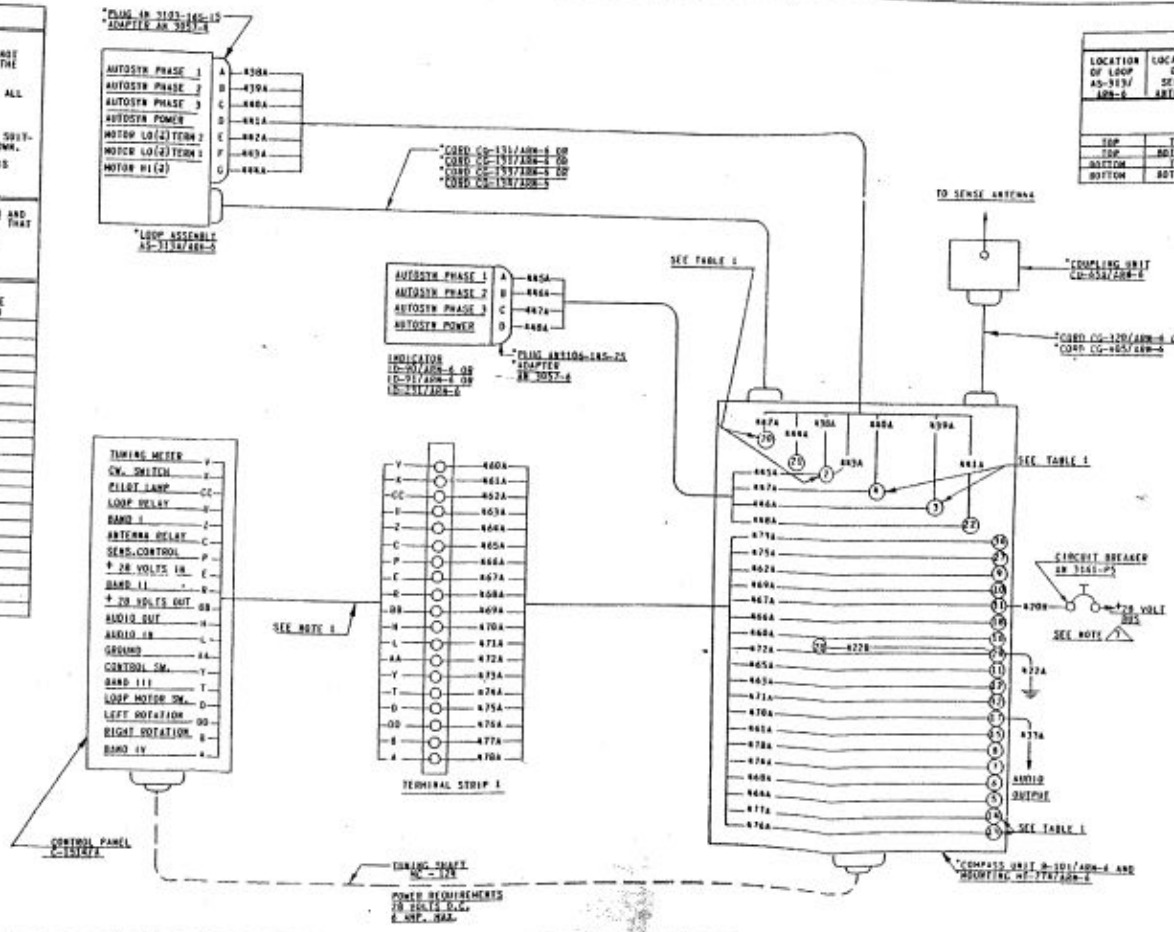

TABLE 1-SEE NOTE 4

LOCATION OF LOOP AS-3134/ ARN-6	LOCATION OF SENSE ANTENNA	INDICATOR ROTATION		LOOP L-R SWITCH		COMPA SENS
		TERMINAL		TERMINAL		TERMI
		4	3	23	24	2
		WIRE NO.		WIRE NO.		WIRE
TOP	TOP	440	439	476	477	443
TOP	BOTTOM	440	439	477	476	442
BOTTOM	TOP	439	440	476	477	442
BOTTOM	BOTTOM	439	440	477	476	443

Figure 8-38. Radio Compass AN/ARN-6, Complete Wiring Diagram, Using Radio Compass Receiver R-101/ARN-6 and Control Panel C-1514/A, Single Control

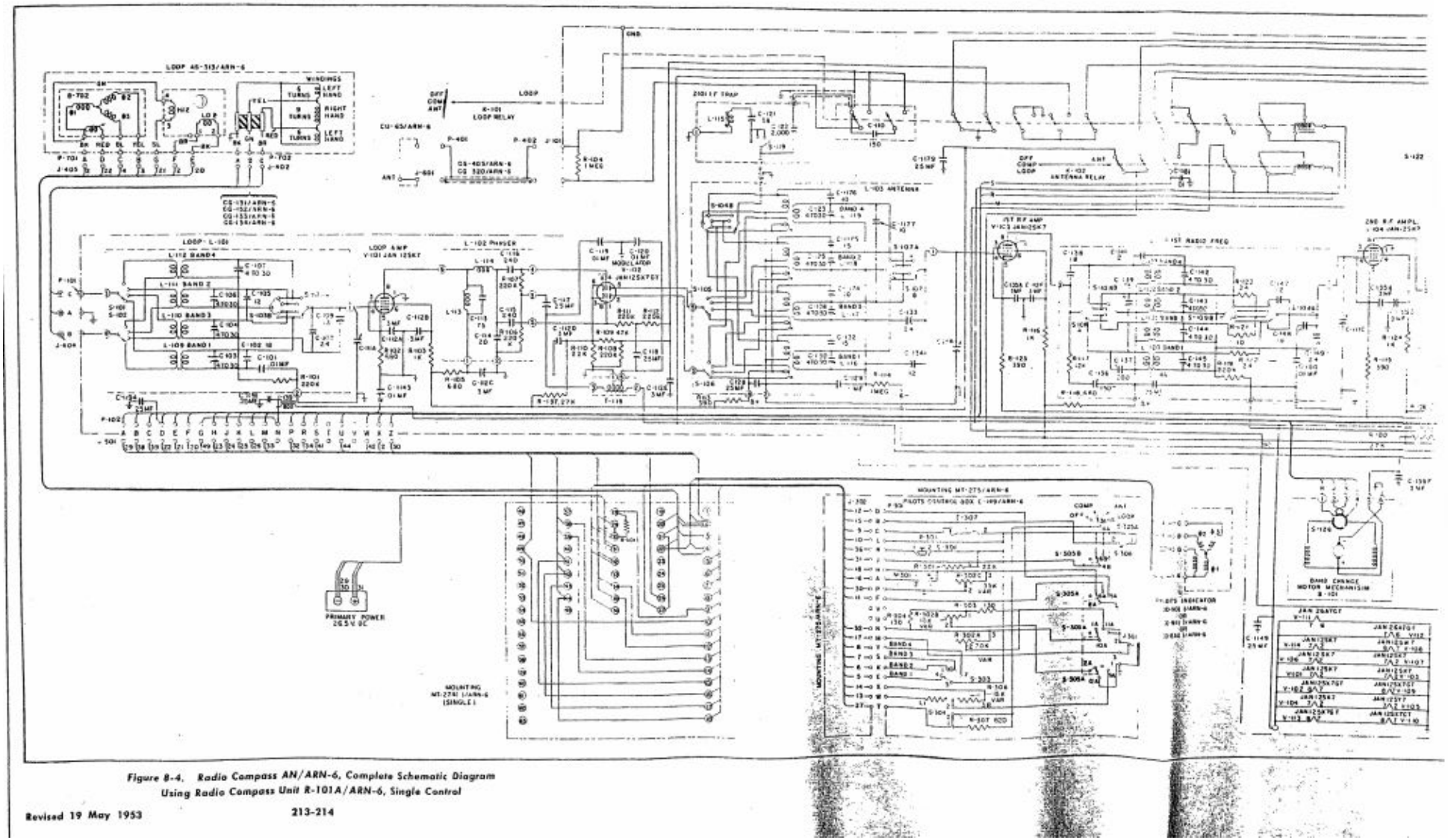

Figure 8-4. Radio Compass AN/ARN-6, Complete Schematic Diagram Using Radio Compass Unit R-101A/ARN-6, Single Control

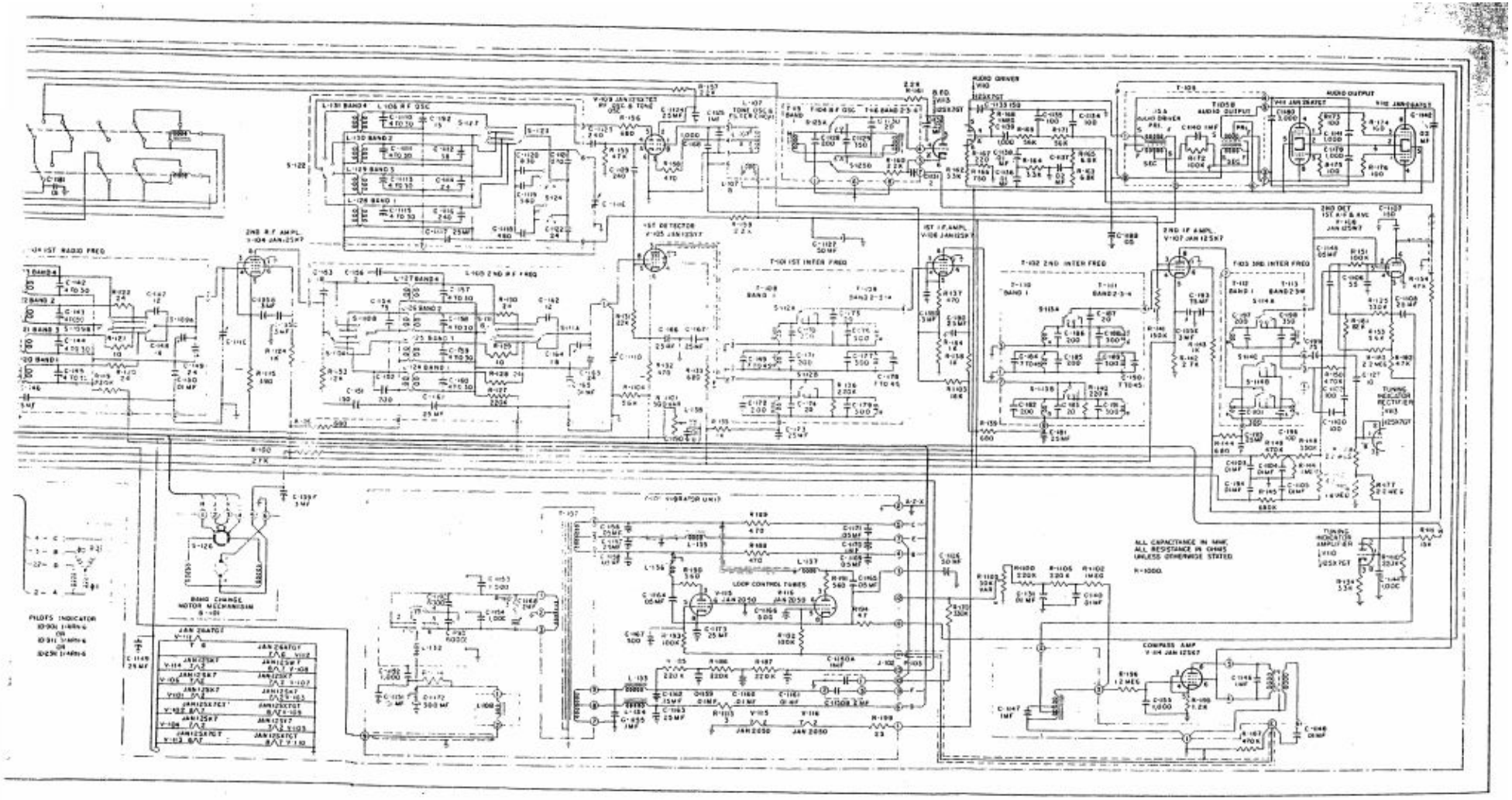
2ND R.F. AMPL.
1ST DETECTOR
1ST I.F. AMPL.
2ND I.F. AMPL.
AUDIO DRIVER
AUDIO OUTPUT
2ND DET.
1ST A.F. & AVC
T-101 1ST INTER FREQ
T-102 2ND INTER FREQ
T-103 3RD INTER FREQ
LOOP CONTROL TUBES
COMPASS AMP
BAND CHANGE MOTOR MECHANISM
PILOTS INDICATOR
TUNING INDICATOR RECTIFIER
TUNING INDICATOR AMPLIFIER
ALL CAPACITANCE IN MMF.
ALL RESISTANCE IN OHMS
UNLESS OTHERWISE STATED
R-1000.

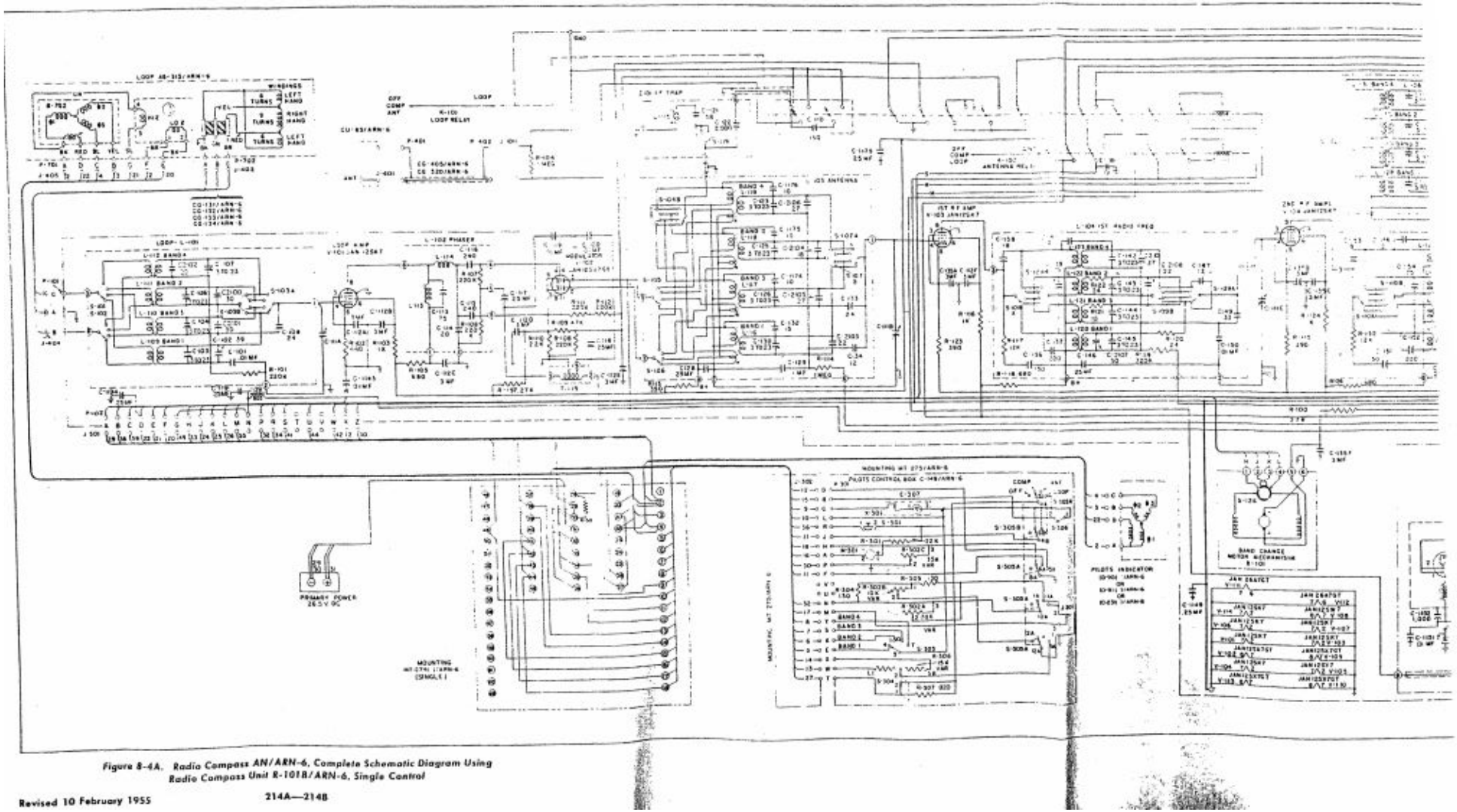

Figure 8-4A. Radio Compass AN/ARN-6, Complete Schematic Diagram Using Radio Compass Unit R-101B/ARN-6, Single Control

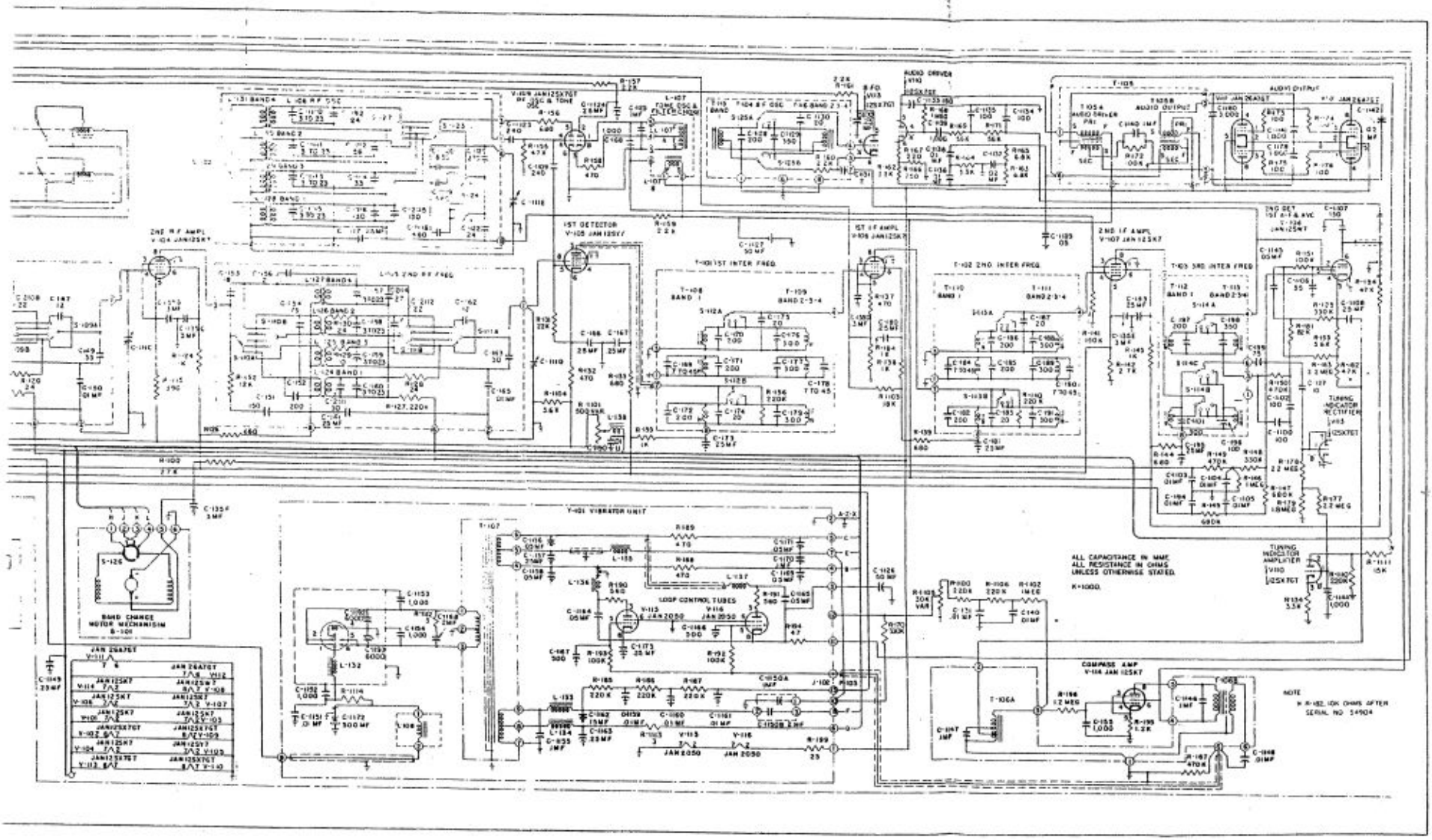
2ND R.F. AMPL
1ST DETECTOR
1ST I.F. AMPL
2ND I.F. AMPL
AUDIO DRIVER
AUDIO OUTPUT
T-101 1ST INTER FREQ.
T-102 2ND INTER FREQ.
T-103 3RD INTER FREQ.
2ND DET 1ST A.F.& AVC
TUNING INDICATOR RECTIFIER
TUNING INDICATOR AMPLIFIER
T-101 VIBRATOR UNIT
LOOP CONTROL TUBES
COMPASS AMP
BAND CHANGE MOTOR MECHANISM
ALL CAPACITANCE IN MMF.
ALL RESISTANCE IN OHMS
UNLESS OTHERWISE STATED.
K=1000.
NOTE
R-182, 10K OHMS AFTER SERIAL NO. 54904

WIRE TABLE I

△ NOTES (GENERAL NOTES) LISTED ON W/AD DRAWING NO. AD 1500 SHALL APPLY TO THIS DRAWING WHEN APPLICABLE AND/OR AS INDICATED ON THIS DRAWING.

METHOD OF IDENTIFYING WIRES IN TABLE BELOW

△ IN ACCORD

REF NOTE	WIRE NO.	MAXIMUM OPERATING VOLTAGE	CONDUCTED CURRENT AMPERES	MAXIMUM ALLOWABLE VOLTAGE DROP VOLTS	MINIMUM CABLE SIZE PERMITTED	REF NOTE	WIRE NO.	MAXIMUM OPERATING VOLTAGE	CONDUCTED CURRENT AMPERES	MAXIMUM ALLOWABLE VOLTAGE DROP VOLTS	MINIMUM CABLE SIZE PERMITTED
	420A	28	4.1	TABLE II	20		426A	28	0.01	2%	22
	421A	8	4.1	TABLE II	20		427A	28	4.1	TABLE II	20
	415A	28	0.00	2%	22		416A	28	0.07	2.8%	20
	418A	0		2%	22		419A	28	3.34	0.44	20
	420A	28		2%	22		417A	28	3.63	2%	22
	418A	14		2%	22		419A	28	0.15	2%	22
	416A	28		2%	22		417A	0	4.36	0.1	20
	419A	28	0.00	2%	22		421A	0	0.1	2%	20
	417A	0	0.00	2%	22		416A	28	0.07	0.04	20
	416A	28	0.040	2%	22		420A	400	0.07	2%	22
	421A	0		2%	22		426A	120	0.02	2%	22
	426A	14		2%	22		427A	120	0.02	2%	22
	427A	14		2%	22		419A	28	0.07	0.04	20
	419A	14		2%	22		418A	28	0.235	2%	22
	418A	14		2%	22						
	415A	28	0.202	2%	22						
	421A	28	0.008	2%	22		440A	28		2%	22
	415A	28	1.28	3.8	22		441A	0		2%	22
	416A	28	0.41	0.44	20		501A	14		2%	22
	415A	28	3.38	3.0	22		502A	14		2%	22

WIRE TABLE II

CIRCUIT	MAXIMUM ALLOWABLE VOLTAGE DROP VOLTS
420A+421A+427A	0.50

TABLE I SEE NOTE - 4

LOCATION OF LOOP AS 30A/ARN-6	LOCATION OF SENSE ANTENNA	INDICATOR RECEIVER TERMINAL 1 WIRE NO.	INDICATOR RECEIVER TERMINAL 2 WIRE NO.	LOOP I-R SWITCH TERMINAL 1 WIRE NO.	LOOP I-R SWITCH TERMINAL 14 WIRE NO.	COMPASS SENSE TERMINAL 2 WIRE NO.	COMPASS SENSE TERMINAL 20 WIRE NO.
TOP	TOP	440A	441A	501A	502A	501A	502A
TOP	BOTTOM	440A	441A	415A	416A	441A	440A
BOTTOM	TOP	415A	416A	416A	415A	441A	440A
BOTTOM	BOTTOM	415A	416A	415A	416A	441A	440A

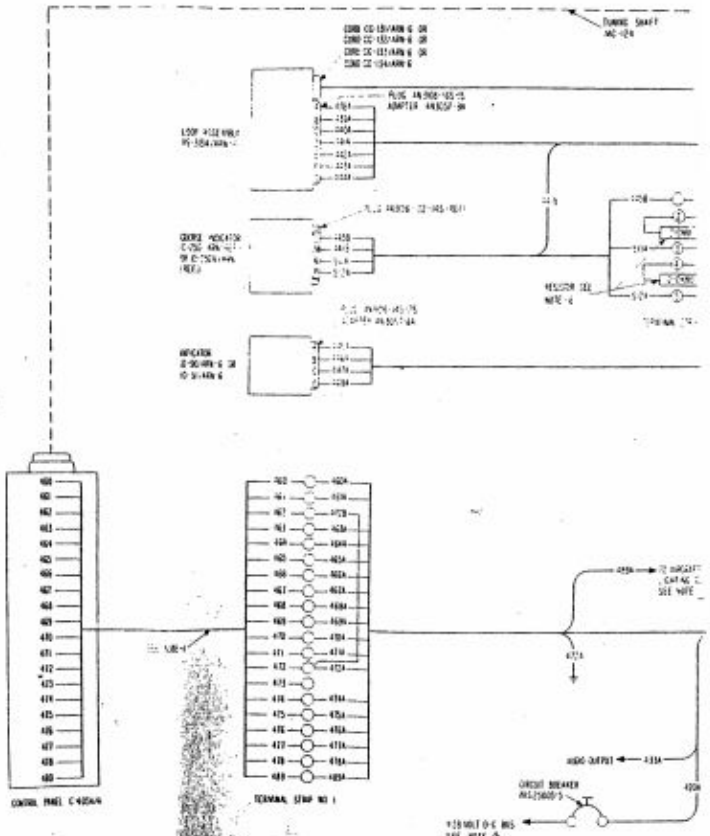

NOTES

1. CONTROL PANEL C-420A/N IS FURNISHED WITH CABLES ATTACHED, WHICH ARE LABELED WITH THE RESPECTIVE WIRE NUMBERS AS INDICATED.
3. WHEN CONTRACTOR FURNISHED BUILT IN SENSE ANTENNA IS INSTALLED, COUPLING UNIT CU-105/ARN-6 IS NOT REQUIRED. MAKE ALTERNATE CONNECTION AS SHOWN.
4. CONNECT WIRES NO. 416A, 440A, 441A, 415A, 418A, 417A AS SHOWN IN TABLE-I. WIRING DIAGRAM SHOWS CONNECTIONS FOR BOTH LOOP & SENSE ANTENNA INSTALLED ON TOP OF AIRPLANE.
5. WHEN COURSE INDICATOR ID-250/ARN OR ID-250A/ARN IS INSTALLED, DELETE INDICATOR ID-90/ARN-6 OR INDICATOR ID-91/ARN-6 AND WIRE NO. 440A. RENUMBER WIRE NO. 441A FROM TERMINAL NO. 22 OF THE RADIO COMPASS BASE CONNECTOR BOX IN MOUNTING AM-294A/ARN-6. CONNECT WIRES NO. 440A & NO. 441A TO TERMINAL STRIP NO. 2 AS INDICATED. MAKE ALL OTHER CONNECTIONS AS SHOWN.
6. RESISTOR SHALL BE IN ACCORDANCE WITH SPEC. JAN-R-11 TYPE NO. RC20GE203A (12-OHMS).
7. RESISTOR RC21GE501K IS ONLY REQUIRED WHEN RADIO COMPASS AN/ARN-6 IS USED WITH INTERCOMMUNICATION SET AN/AIC-10. RESISTOR SHALL BE IN ACCORDANCE WITH SPEC. JAN-R-11 TYPE RC21GE501K (550-OHMS).

Figure 8-48. Radio Compass AN/ARN-6, Complete Wiring Diagram, Using Radio Compass Unit R-101A/ARN-6, Single Control

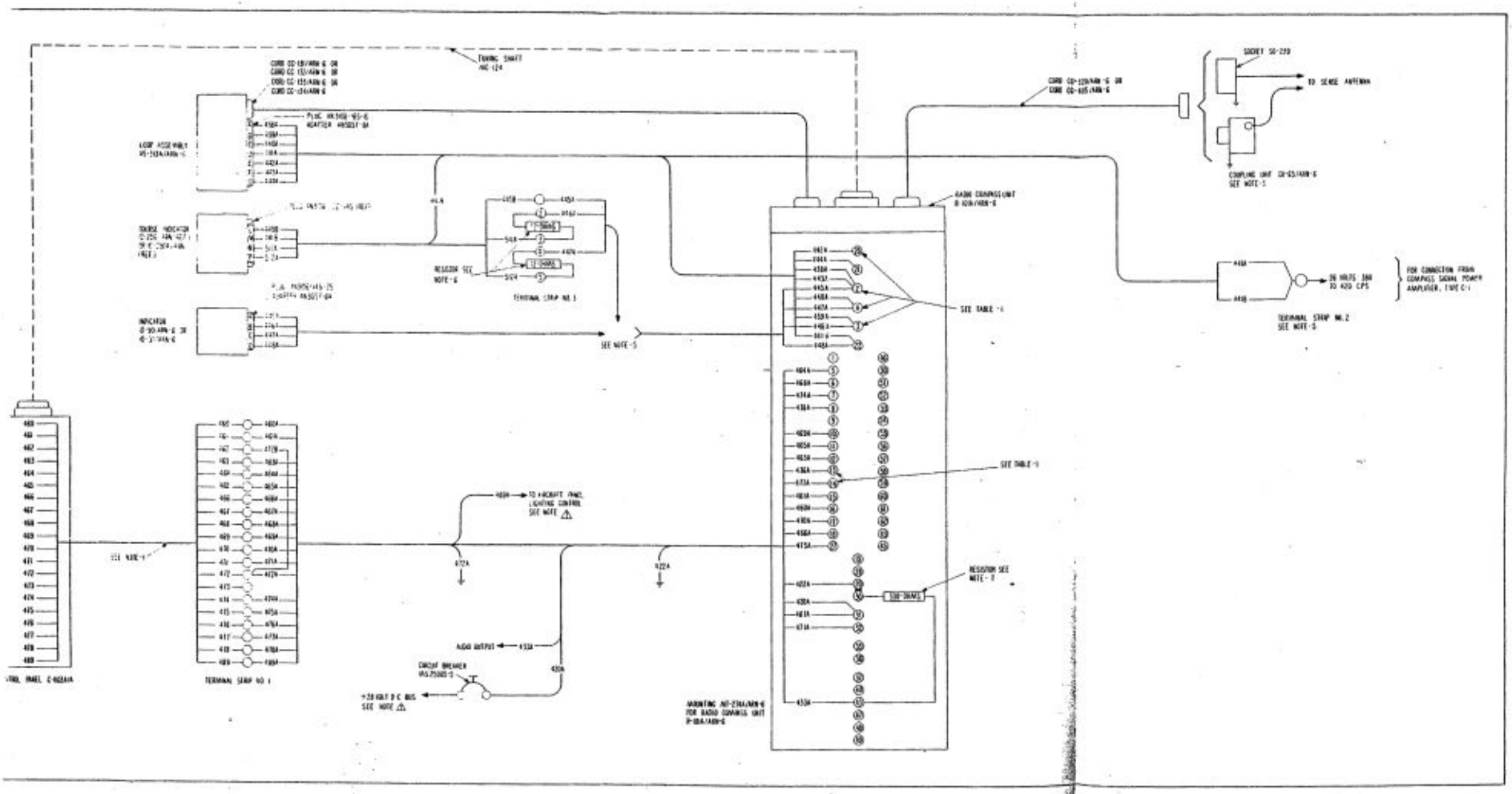
TERMINAL STRIP NO. 1
TO HIGHLIGHT PANEL LIGHTING CONTROL SEE NOTE
CIRCUIT BREAKER
SEE TABLE-1
RESISTOR SEE NOTE-2
SOCKET SO-239
TO SENSE ANTENNA
COUPLING UNIT CU-65/ARN-6
SEE NOTE-5
TERMINAL STRIP NO. 2
SEE NOTE-5
FOR CONNECTION FROM COMPASS SIGNAL POWER AMPLIFIER, TYPE C-1

RESISTORS

Ref.	Value
R-100	2,700
R-101	220,000
R-102	390
R-103	1,000
R-104	1 meg
R-105	680
R-106	220,000
R-107	220,000
R-108	220,000
R-109	47,000
R-110	2,200
R-111	220,000
R-112	220,000
R-113	390
R-114	1 meg
R-115	390
R-116	1,000
R-117	12,000
R-118	680
R-119	220,000
R-120	24
R-121	10
R-122	24
R-123	390
R-124	1,000
*R-125	350,000
R-126	680
R-127	220,000
R-128	24
R-129	10
R-130	24
R-131	22,000
R-132	470
R-133	680
R-134	3,300
R-135	1,000
R-136	220,000
R-137	470
R-138	1,000
R-139	680
R-140	220,000
R-141	150,000
R-142	2,700
R-143	1,000
R-144	680
R-145	680,000
R-146	1 meg
R-147	680,000
R-148	330,000
R-149	470,000
*R-150	470,000
R-151	100,000
R-152	12,000
R-153	5,600
R-154	47,000
R-155	47,000
R-156	680
R-157	2,300
R-158	470
R-159	2,200
R-160	2,200
R-161	2,200
R-162	3,300
R-163	6,800
R-164	3,300
R-165	6,800
R-166	750
R-167	220
R-168	1 meg
R-169	56,000
R-170	330,000
R-171	56,000
R-172	100,000
R-173	100
R-174	100
R-175	100

RESISTORS

Ref.	Value
R-176	100
R-177	2.2 meg
R-178	2.2 meg
R-179	820,000
*R-180	470,000
R-181	82,000
R-182	4,700
R-183	2.2 meg
R-184	1,000
R-185	220,000
R-186	220,000
R-187	220,000
R-188	470
R-189	470
R-190	560
R-191	560
R-192	100,000
R-193	100,000
R-194	47
R-195	1,200
R-196	1.2 meg
R-197	27,000
R-199	25
R-301	22,000
R-302A	70,000 var.
B	10,000 var.
C	35,000 var.
R-303	150
R-304	150
R-305	15,000 var.
*R-307	1,500
R-501	40
R-1100	220,000
R-1101	500 var.
R-1102	1 meg
R-1103	18,000
R-1104	4,700
R-1105	30,000 var.
R-1106	220,000
R-1107	120,000

CAPACITORS

Ref.	Value
C-101	.01 uf
C-102	18
C-103	4 to 30
C-104	4 to 30
C-105	12
C-106	4 to 30
C-107	4 to 30
C-108	24
C-109	12
C-110	150
C-111	tuning
C-112	.3 uf per sec.
C-113	75
C-114	20
C-115	240
C-116	240
C-117	.25 uf
C-118	.25 uf
C-119	.01 uf
C-120	.01 uf
C-121	18
C-122	2,000
C-123	4 to 30
C-125	4 to 30
C-126	4 to 30
C-127	10
C-128	.25 uf
C-129	.05 uf
C-130	4 to 30

CAPACITORS

Ref.	Value
C-131	.01 uf
C-132	15
C-133	24
C-134	12
C-135	.3 uf per sec.
C-136	150
C-137	200
C-138	18
C-139	75
C-140	.01 uf
C-141	2
C-142	4 to 30
C-143	4 to 30
C-144	4 to 30
C-145	4 to 30
C-146	.25 uf
C-147	12
C-148	18
C-149	24
C-150	.01 uf
C-151	150
C-152	200
C-153	18
C-154	75
C-155	1,000
C-156	2
C-157	4 to 30
C-158	4 to 30
C-159	4 to 30
C-160	4 to 30
C-161	.25 uf
C-162	12
C-163	24
C-164	18
C-165	.01 uf
C-166	.25 uf
C-167	.25 uf
C-168	6,000
C-169	7 to 45
C-170	200
C-171	200
C-172	200
C-173	.25 uf
C-174	25
C-175	24
C-176	500
C-177	350
C-178	7 to 45
C-179	500
C-180	.25 uf
C-181	.25 uf
C-182	200
C-183	20
C-184	7 to 45
C-185	200
C-186	200
C-187	20
C-188	500
C-189	500
C-190	7 to 45
C-191	500
C-192	15
C-193	.25 uf
C-194	.01 uf
C-195	.25 uf
C-196	100
C-197	200
C-198	350
C-199	75
C-501	.1 uf
C-1100	100
C-1101	500
C-1102	100
C-1103	.01 uf
C-1104	.01 uf
C-1105	.01 uf

CAPACITORS

Ref.	Value
C-1106	55
C-1107	150
C-1108	.25 uf
C-1109	240
C-1110	4 to 30
C-1111	4 to 30
C-1112	38
C-1113	4 to 30
C-1114	24
C-1115	4 to 30
C-1116	240
C-1117	.25 uf
C-1118	480
C-1119	560
C-1120	830
C-1121	270
C-1122	24
C-1123	240
C-1124	.25 uf
C-1125	.1 uf
C-1126	50 uf
C-1127	50 uf
C-1128	200
C-1129	350
C-1130	20
C-1131	2
C-1132	.25 uf
C-1133	150
C-1134	100
C-1135	100
C-1136	.01 uf
C-1137	.02 uf
C-1138	.01 uf
C-1139	1,000
C-1140	.1 uf
C-1141	1,000
C-1142	.02 uf
C-1143	.01 uf
C-1144	1,000
C-1145	.05 uf
C-1146	.1 uf
C-1147	.1 uf
C-1148	.01 uf
C-1149	.25 uf
C-1150A	1 uf
B	2 uf
C-1151	.15 uf
C-1152	1,000
C-1153	1,000
C-1154	1,000
C-1155	.1 uf
C-1156	.05 uf
C-1157	.25 uf
C-1158	.05 uf
C-1159	.01 uf
C-1160	.01 uf
C-1161	.01 uf
C-1162	.15 uf
C-1163	.25 uf
C-1164	.05 uf
C-1165	.05 uf
C-1166	500
C-1167	500
C-1168	2 uf
C-1169	.05 uf
C-1170	.1 uf
C-1171	.05 uf
C-1172	300 uf
C-1173	.25 uf
C-1174	10
C-1175	15
C-1176	10
C-1177	10
C-1178	1,000
C-1179	.25 uf
C-1180	3,000

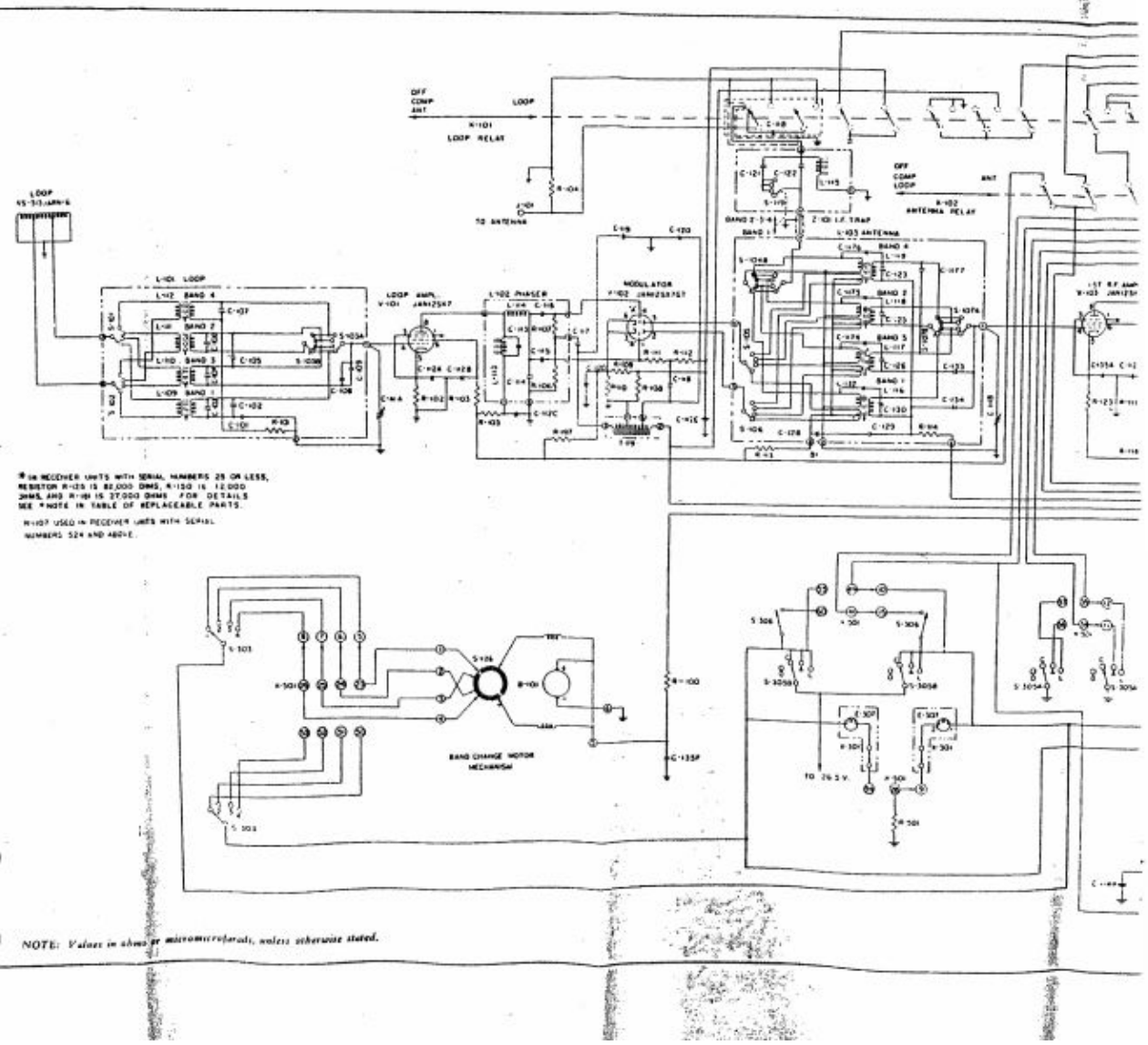

*In RECEIVER UNITS WITH SERIAL NUMBERS 25 OR LESS, RESISTOR R-125 IS 82,000 OHMS, R-150 IS 12,000 OHMS, AND R-180 IS 27,000 OHMS. FOR DETAILS SEE *NOTE IN TABLE OF REPLACEABLE PARTS.

R-307 USED IN RECEIVER UNITS WITH SERIAL NUMBERS 524 AND ABOVE.

NOTE: *Values in ohms or micromicrofarads, unless otherwise stated.*

Figure 8-5. Radio Compass AN/ARN-6, Complete Functional Schematic Diagram when Using Radio Compass Unit R-101/ARN-6

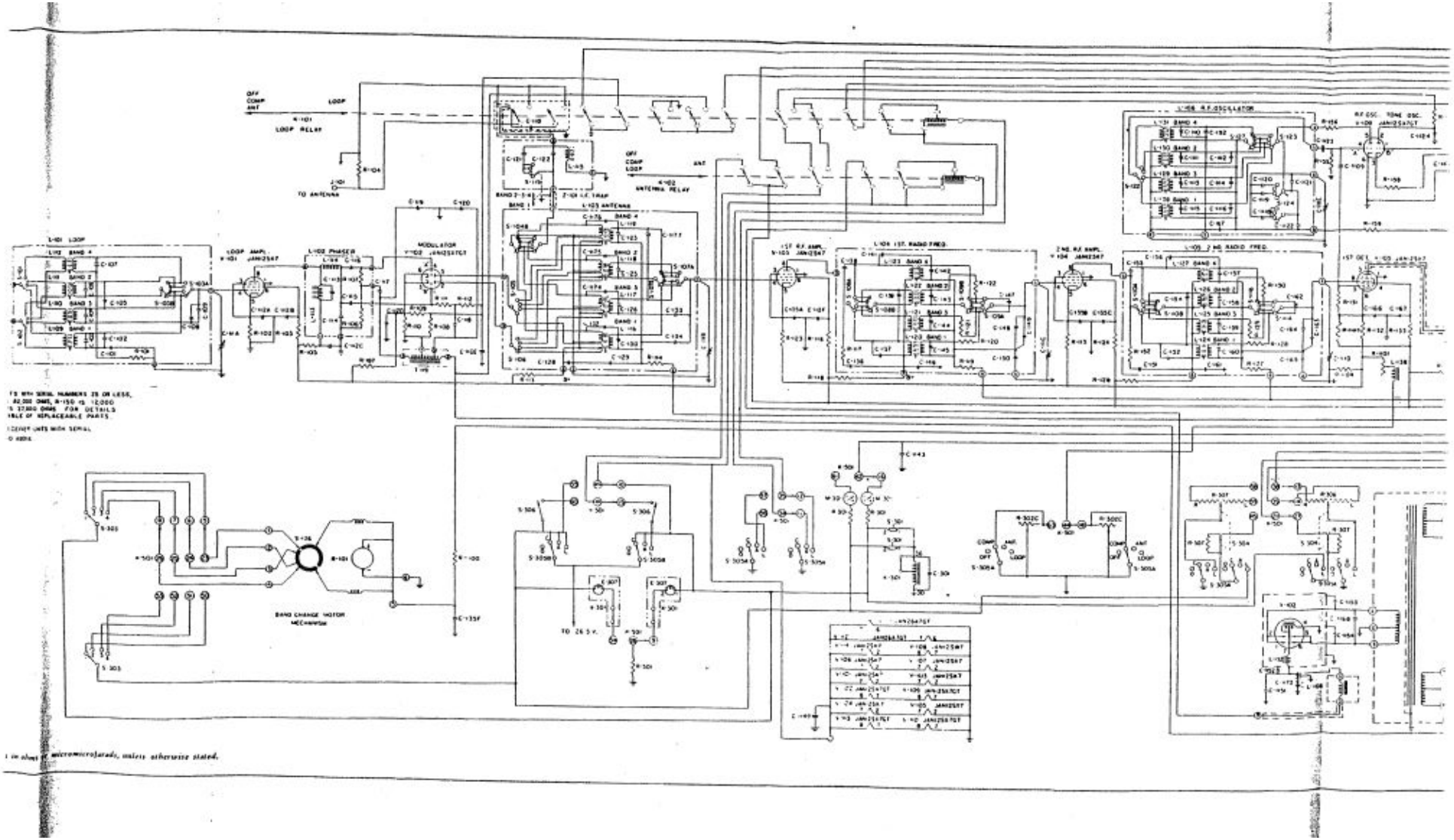

TS WITH SERIAL NUMBERS 28 OR LESS,
82,000 OHMS, R-150 IS 12,000
S 27,000 OHMS. FOR DETAILS
BLE OF REPLACEABLE PARTS.

CEPT UNITS WITH SERIAL
0 ABOVE.

in ohms; [illegible] micromicrofarads, unless otherwise stated.

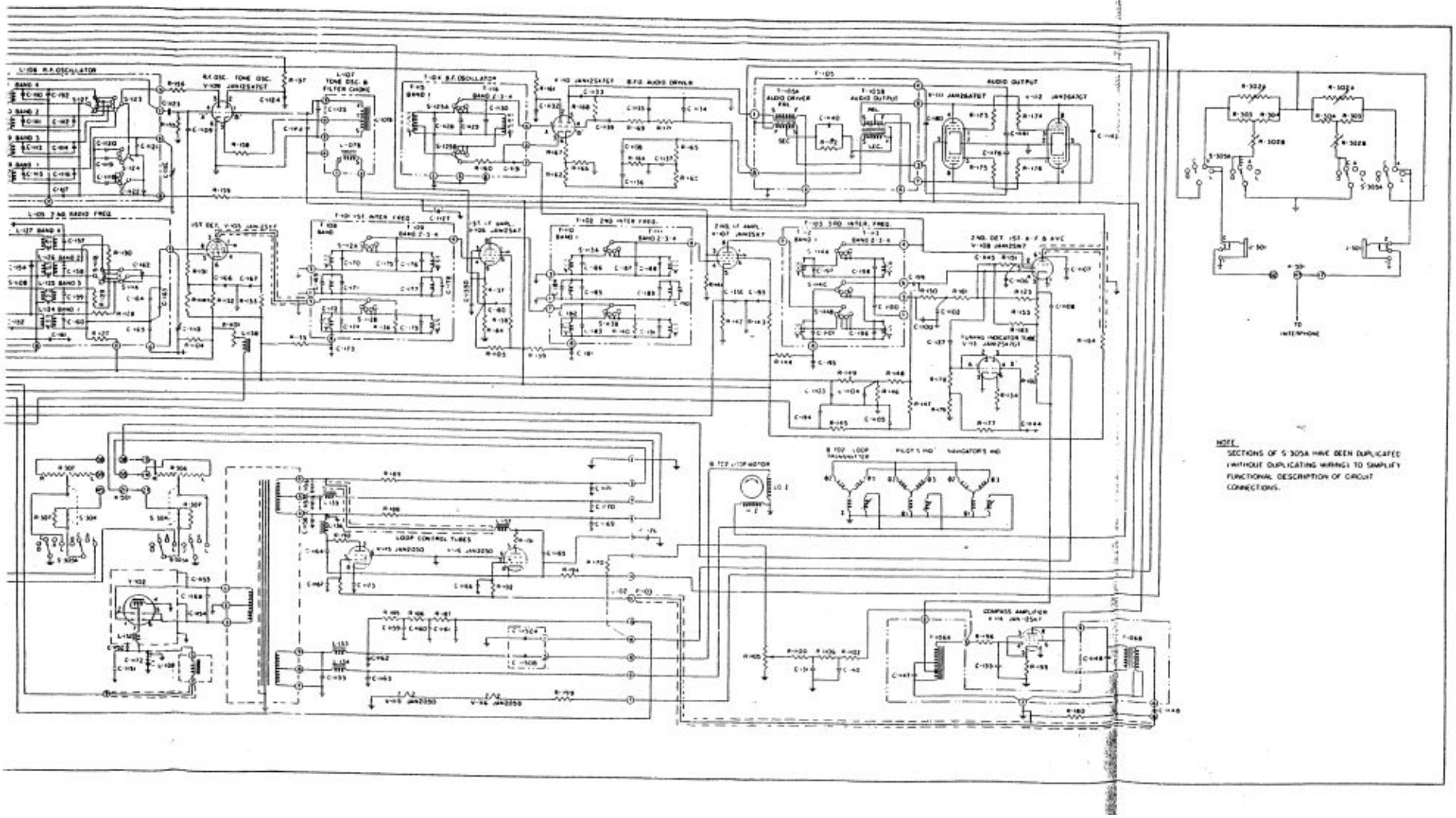
NOTE:
SECTIONS OF S-305A HAVE BEEN DUPLICATED (WITHOUT DUPLICATING WIRING) TO SIMPLIFY FUNCTIONAL DESCRIPTION OF CIRCUIT CONNECTIONS.
TO INTERPHONE

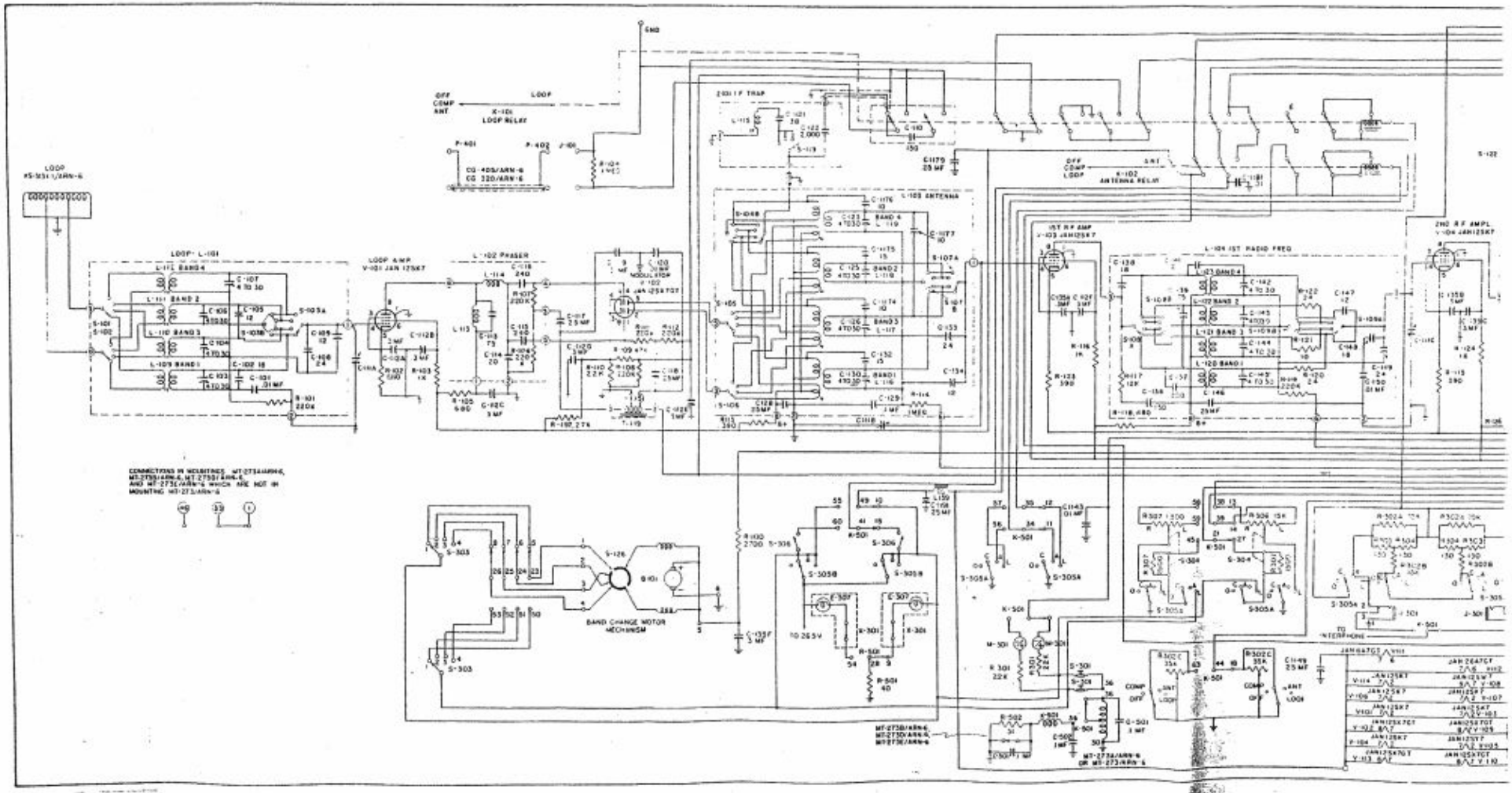

Figure 8-6. Radio Compass AN/ARN-6, Complete Functional Schematic Diagram when Using Radio Compass Unit R-101A/ARN-6

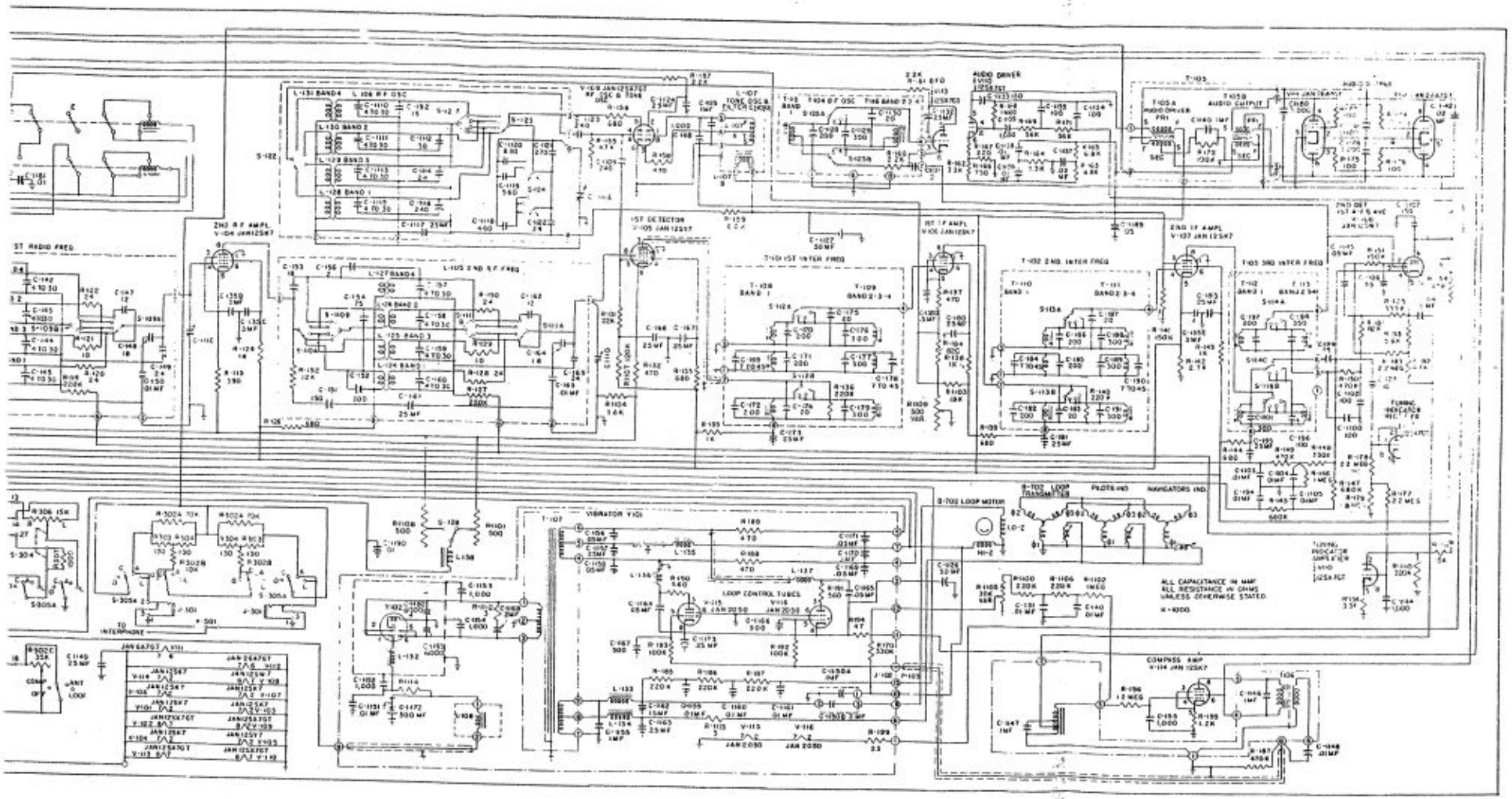
ALL CAPACITANCE IN MMF
ALL RESISTANCE IN OHMS
UNLESS OTHERWISE STATED
K=1000
LOOP CONTROL TUBES
VIBRATOR V101
COMPASS AMP
AUDIO DRIVER
AUDIO OUTPUT
2ND RF AMPL
1ST DETECTOR
1ST IF AMPL
2ND IF AMPL
1ST INTER FREQ
2ND INTER FREQ
3RD INTER FREQ
2ND OSC
1ST & 2ND AVC
FILTER MECHANICAL
TUNING INDICATOR AMPLIFIER
PILOTS IND
NAVIGATORS IND
S-702 LOOP MOTOR
TO INTERPHONE
ANT
LOOP
COMP
OFF

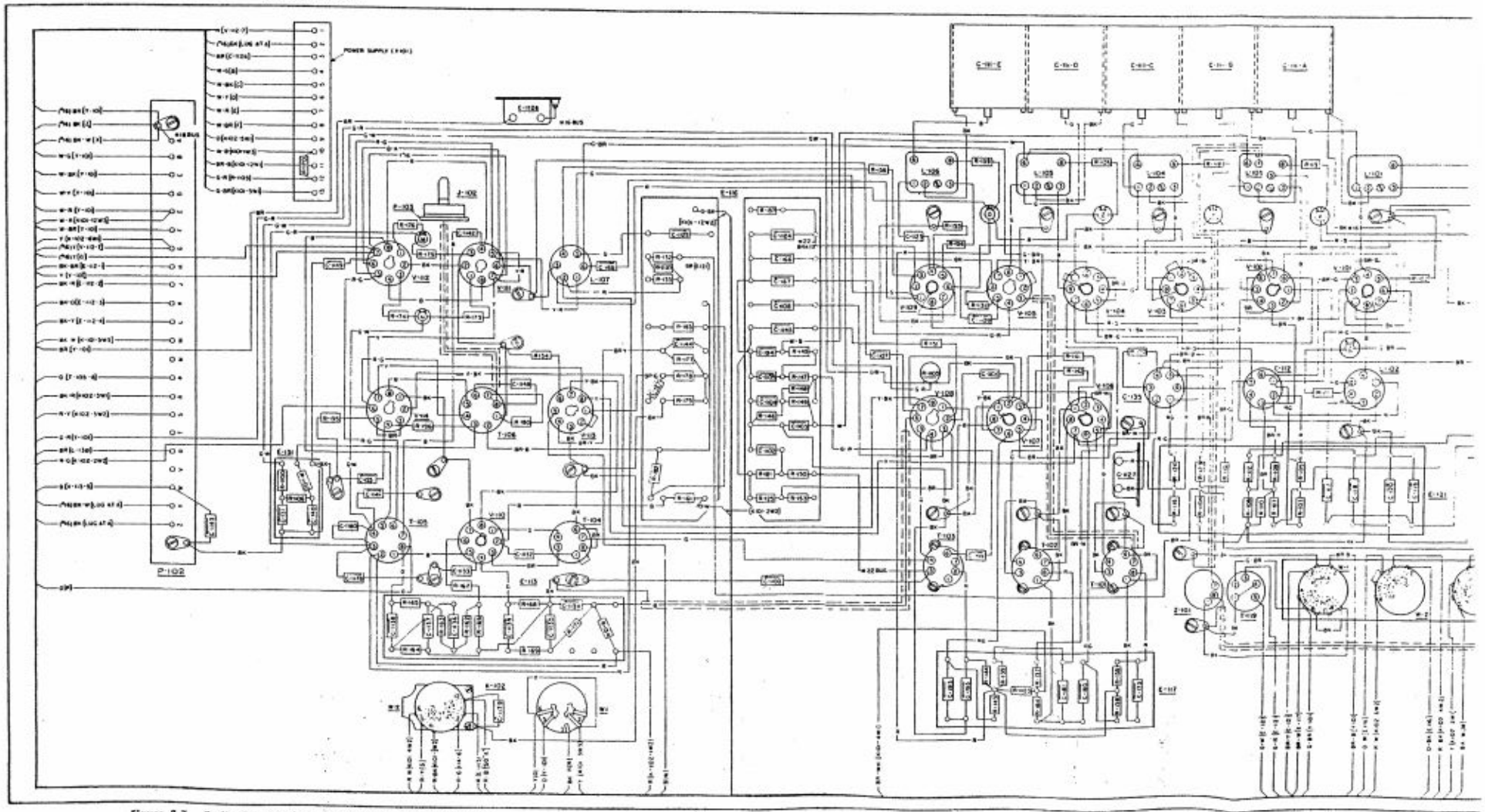

Figure 8-7. Radio Compass Unit R-101/ARN-6, Wiring Diagram

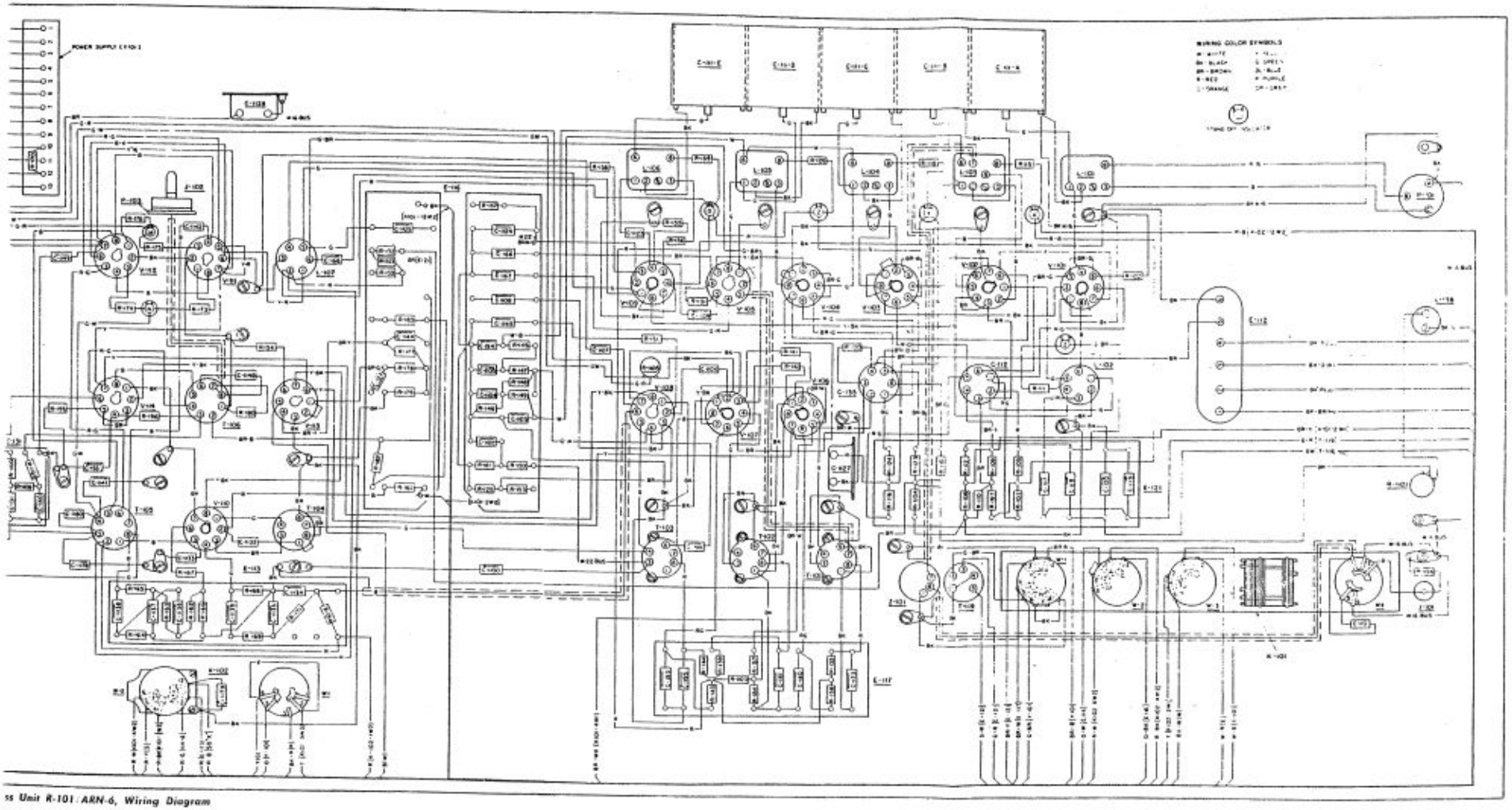

55 Unit R-101 ARN-6, Wiring Diagram

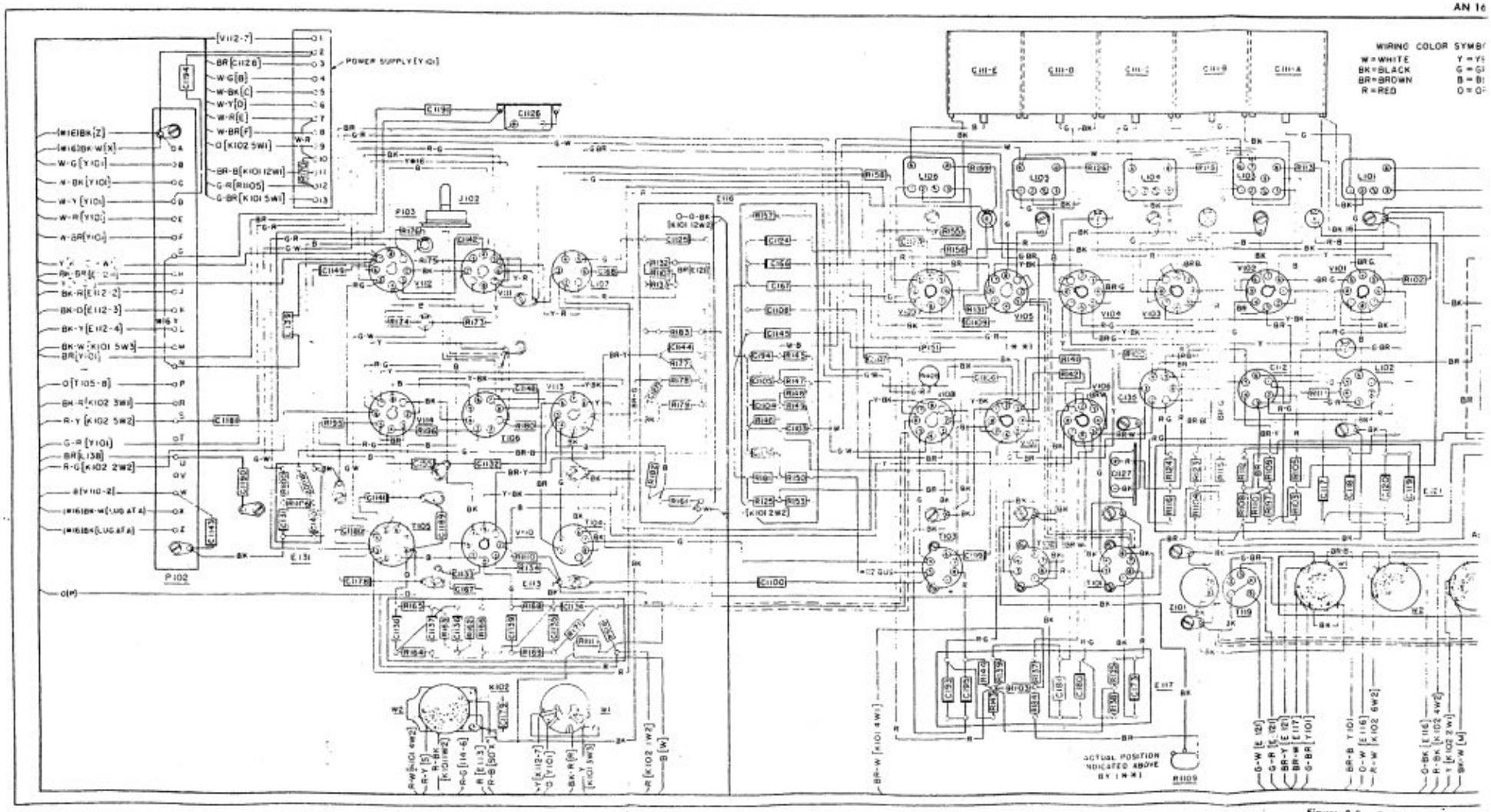

Figure 8-8. Radio Compass Un

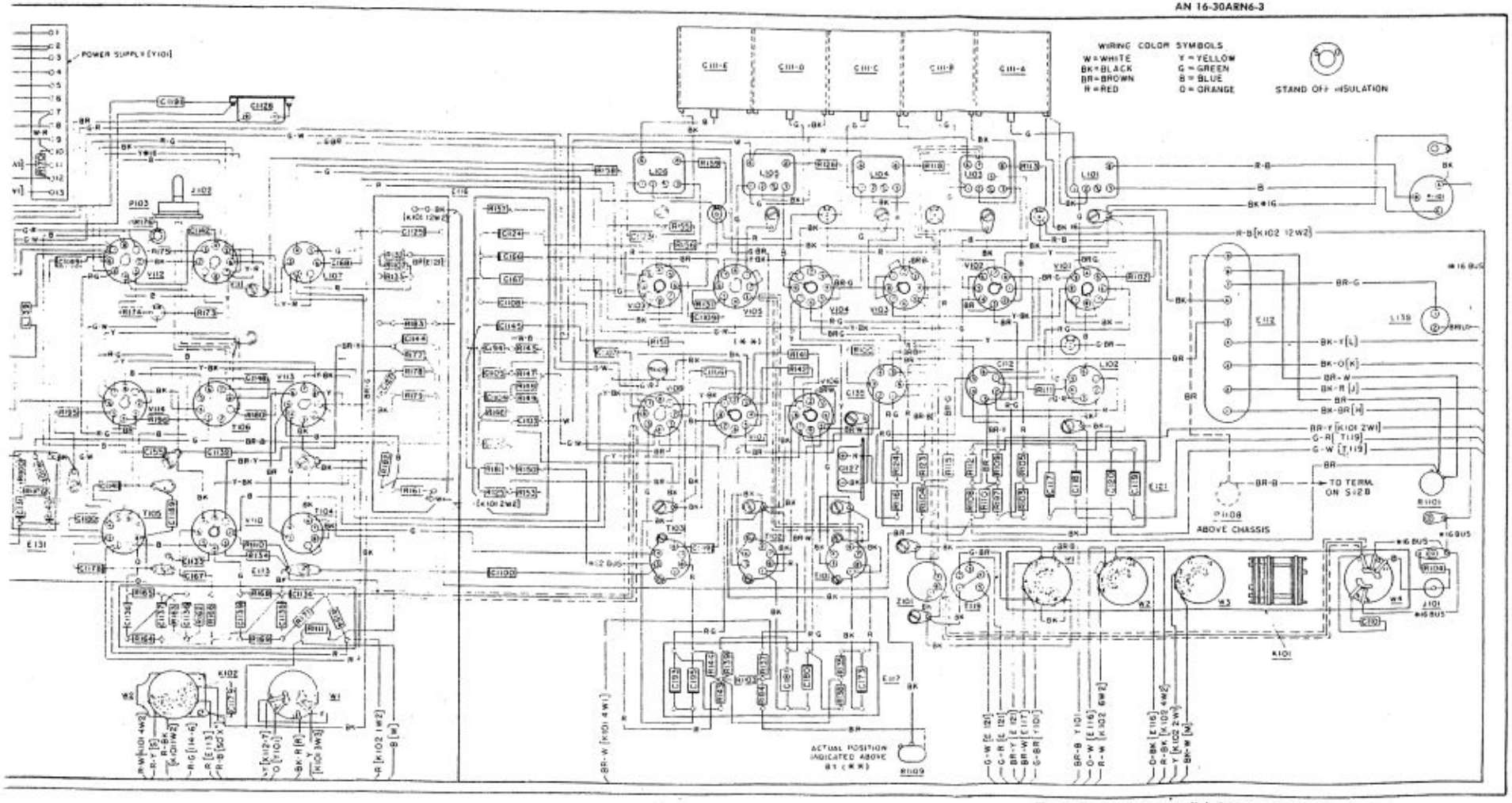

Figure 8-8. Radio Compass Unit R-101A/ARN-6, Wiring Diagram

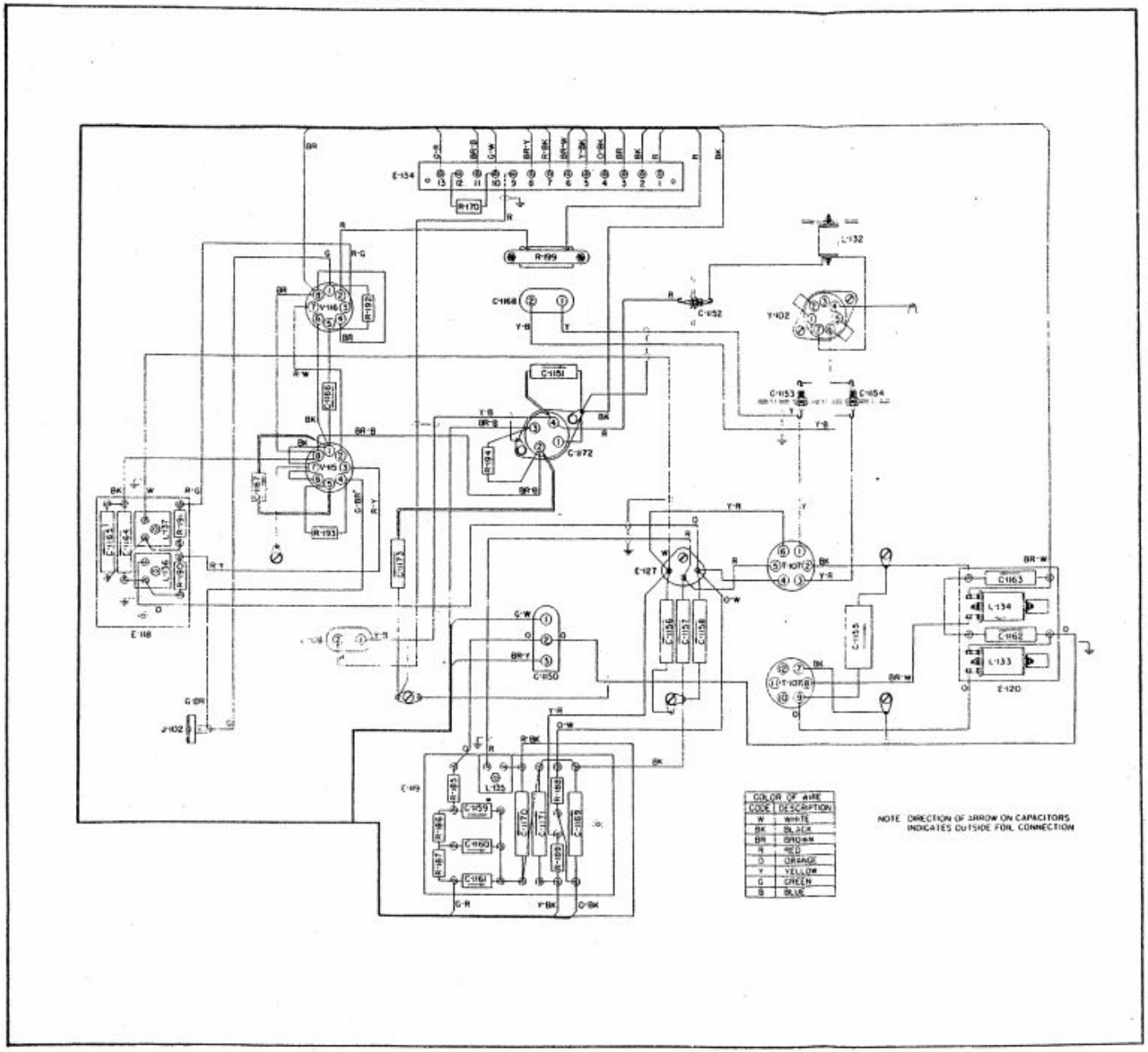

Figure 8-9. Vibrator Inverter Power Supply of Radio Compass Unit R-101/ARN-6, Wiring Diagram

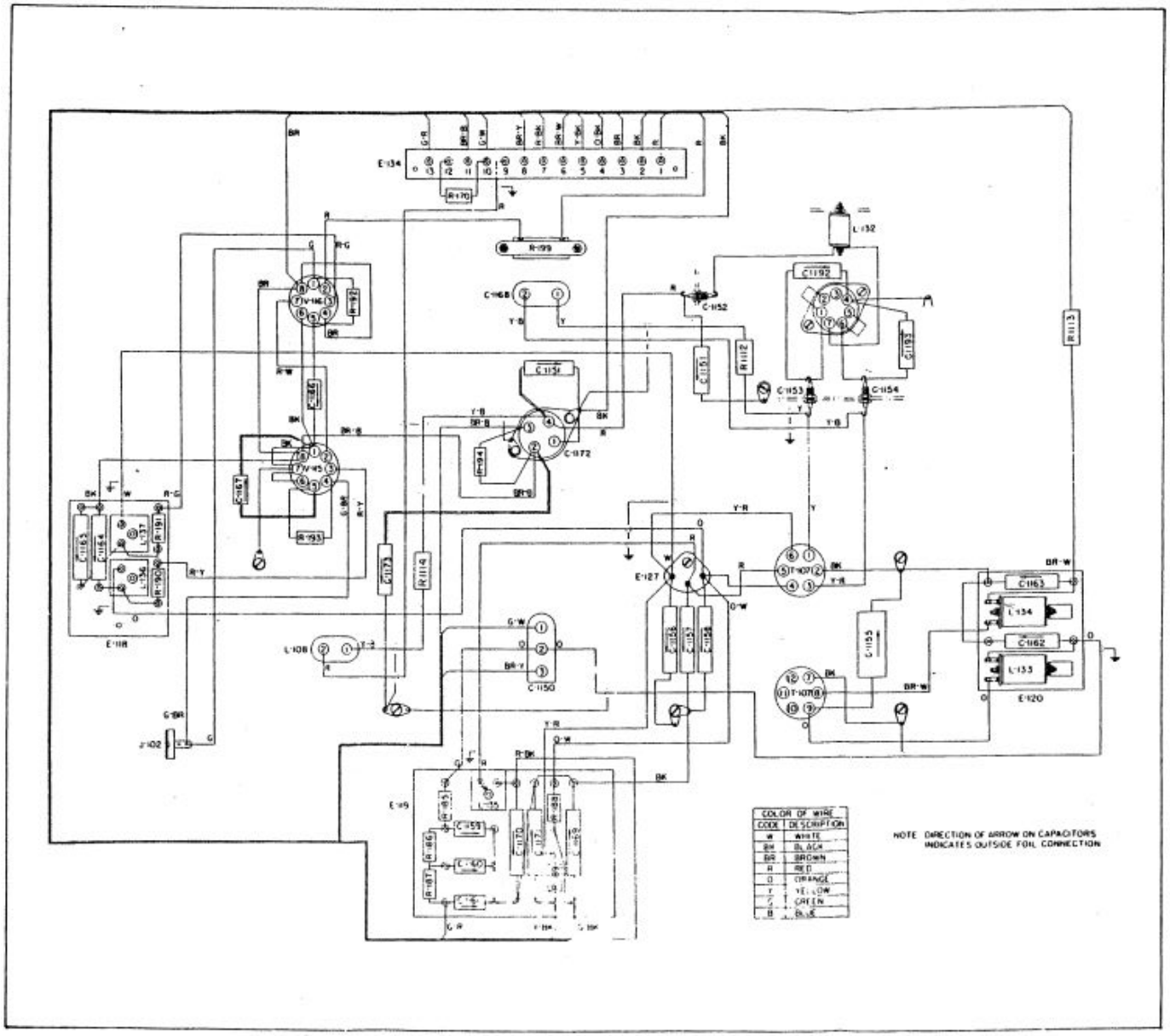

Figure 8-10. Vibrator Inverter Power Supply of Radio Compass Unit R-1O1A/ARN-6, Wiring Diagram

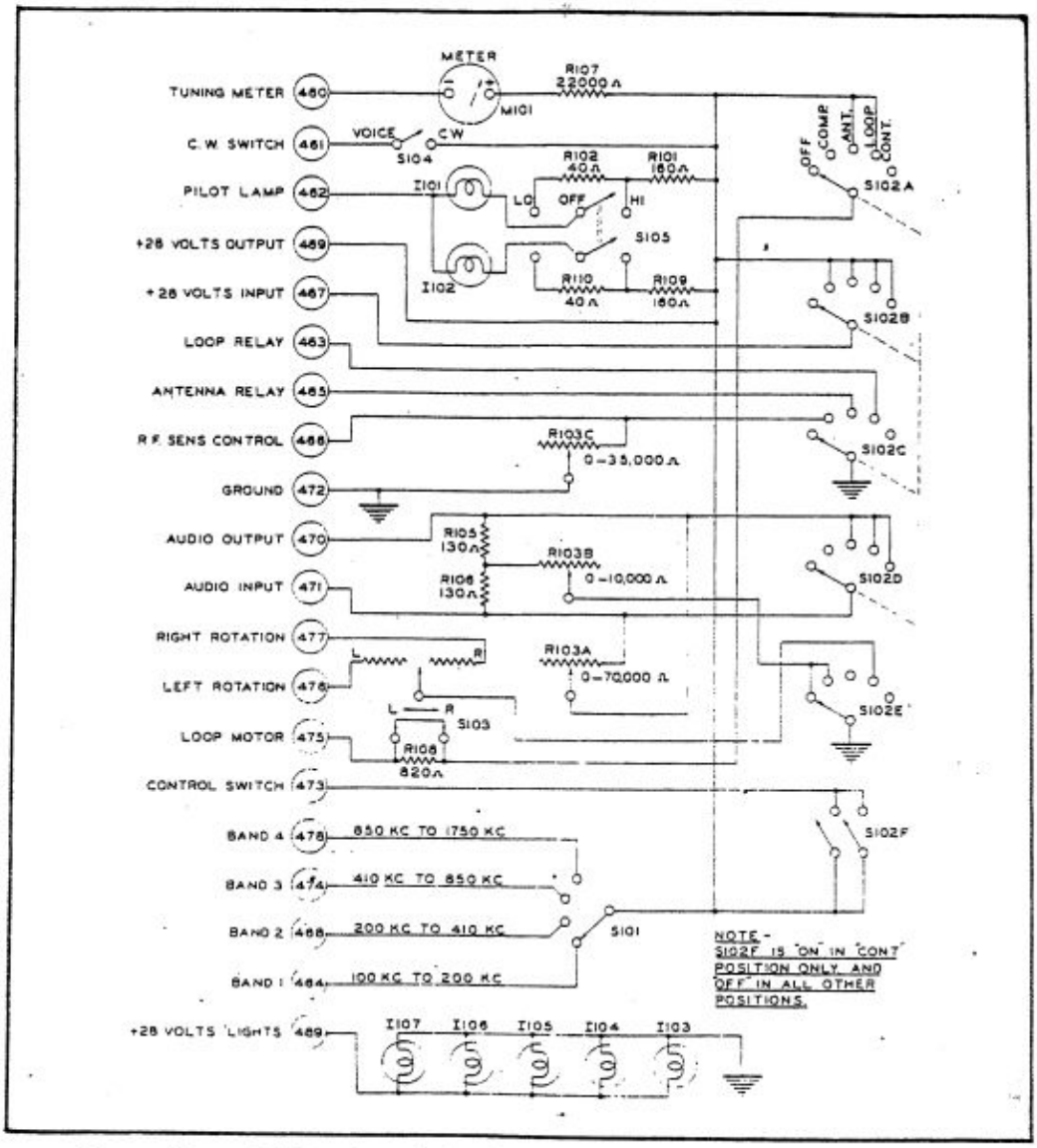

Figure 8-10A. Control Panel C-403A/A, Schematic Diagram

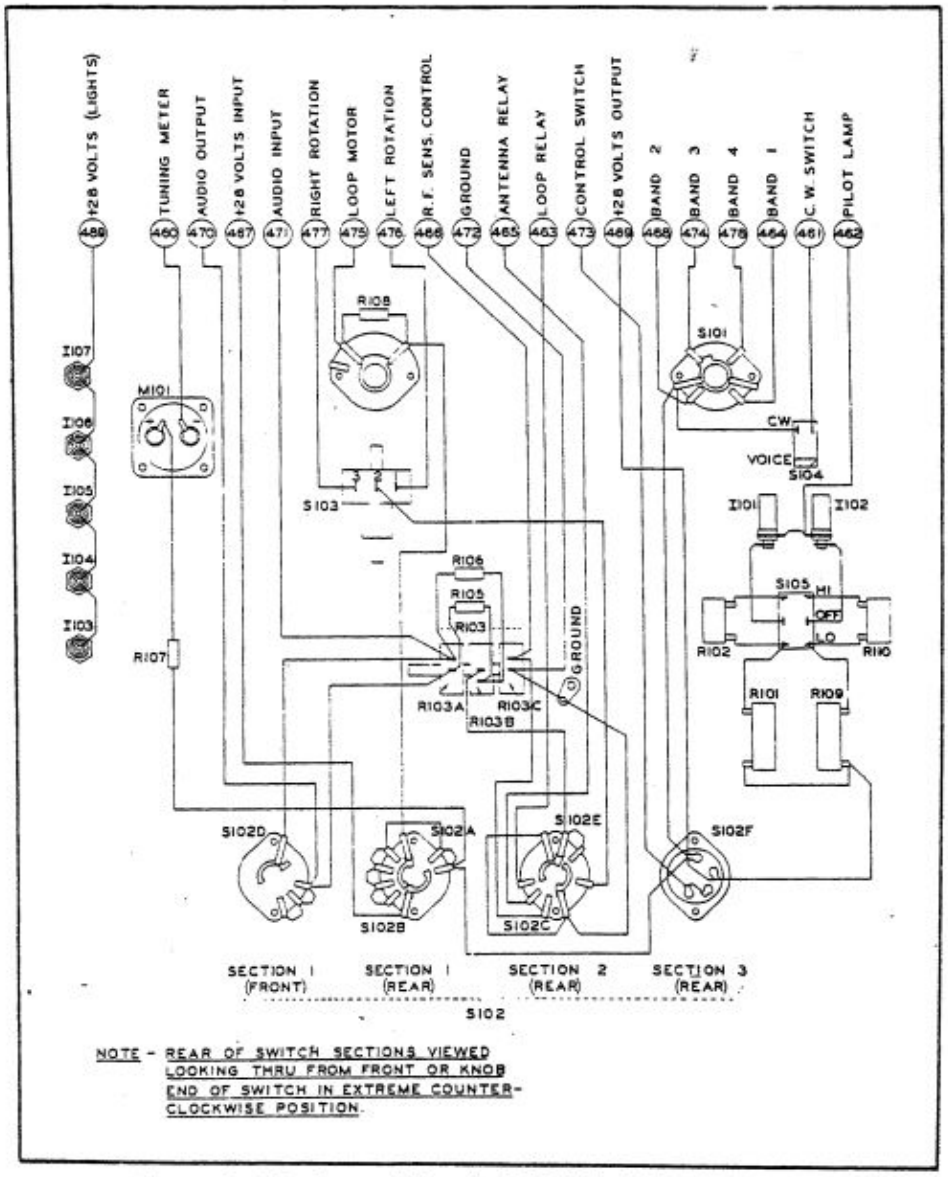

Figure 8-10B. Control Panel C-403A/A, Wiring Diagram

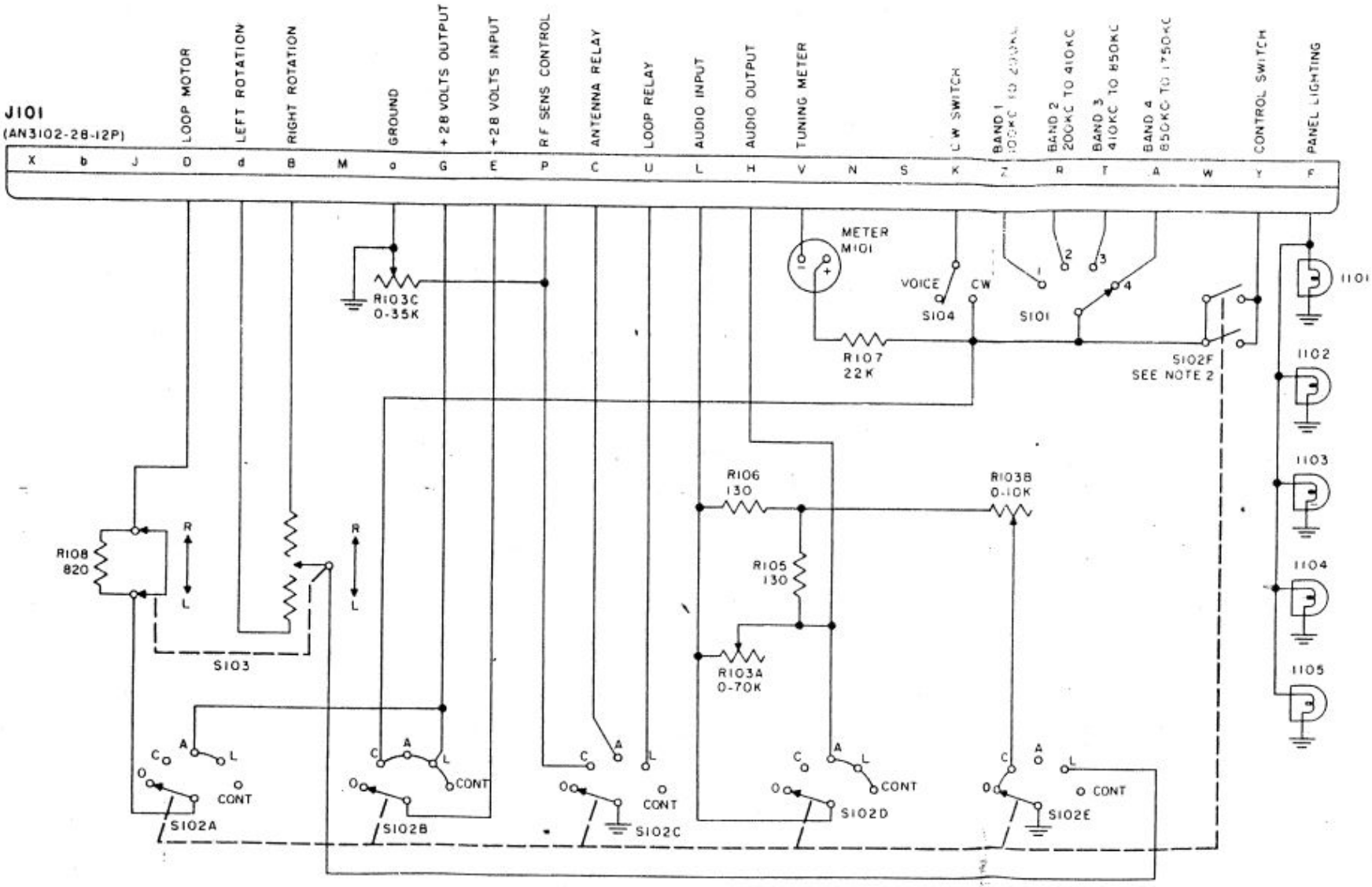

NOTES:

1. UNLESS OTHERWISE INDICATED ALL RESISTANCE VALUES ARE IN OHMS K=1,000 OHMS
2. SWITCH S102F IS "ON" IN "CONT" POSITION ONLY AND "OFF" IN ALL OTHER SWITCH POSITIONS

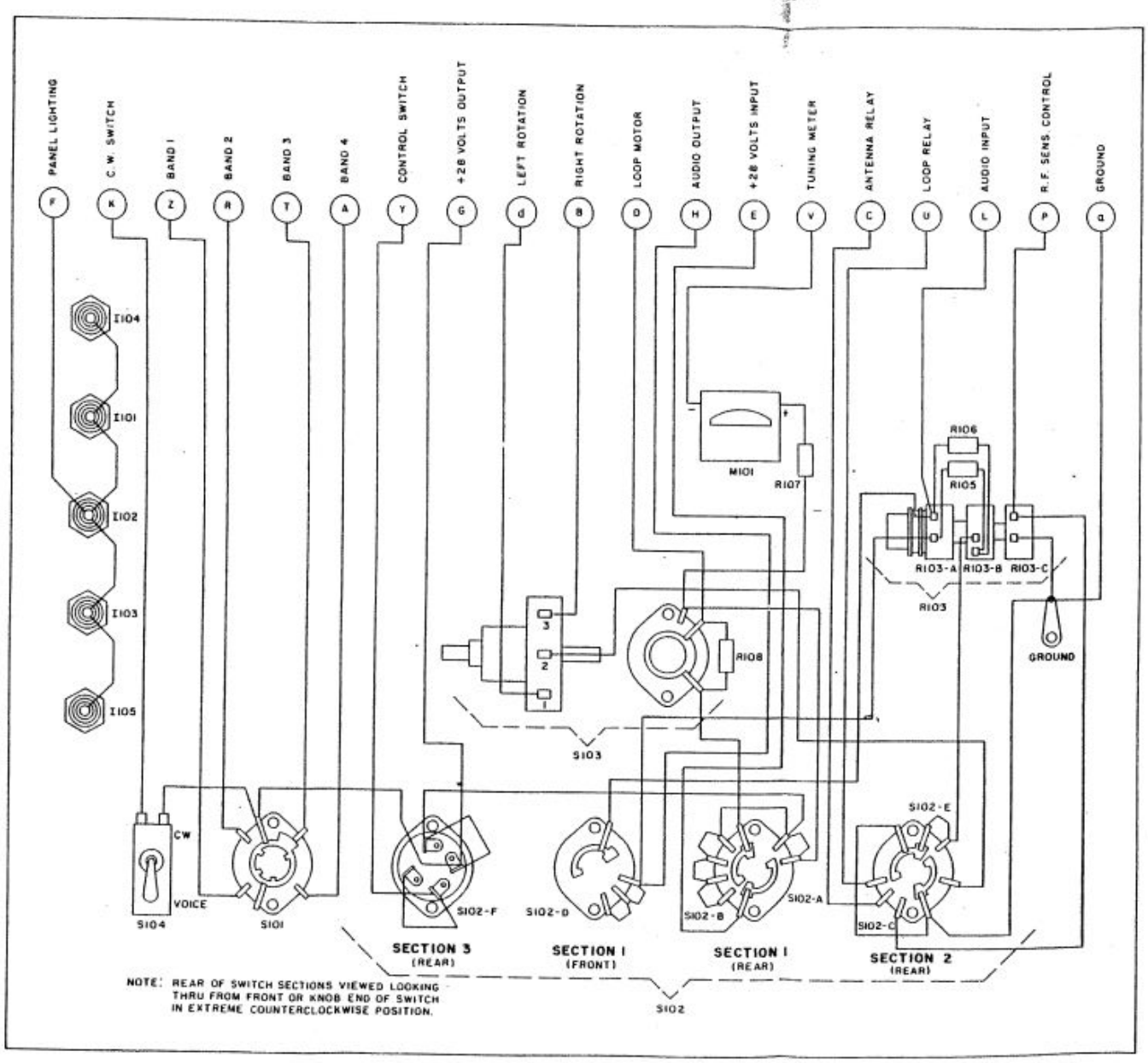

Figure 8-10D. Control Panel C-758/A, Wiring Diagram

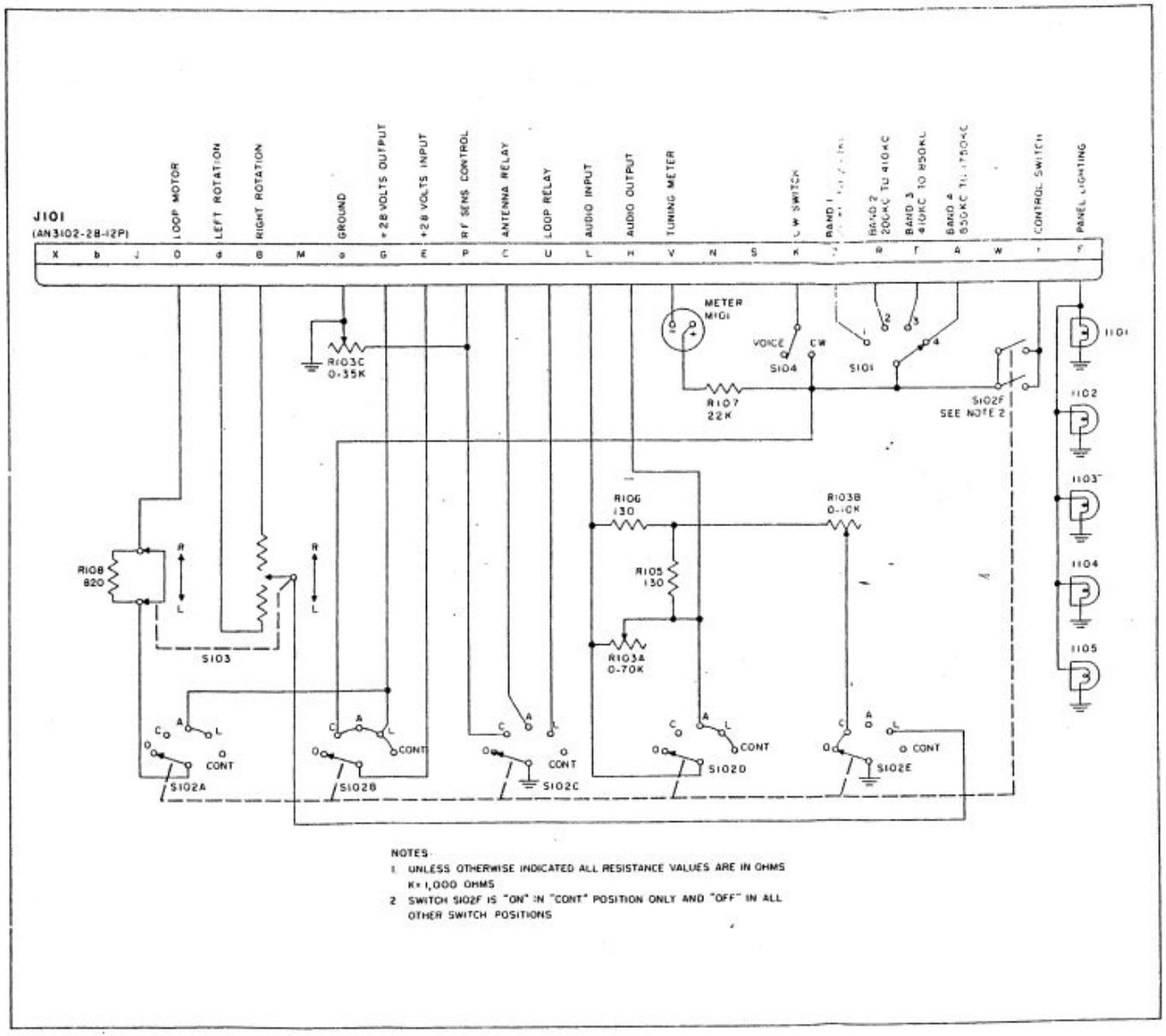

Figure 8-10C. Control Panel C-758/A, Schematic Diagram

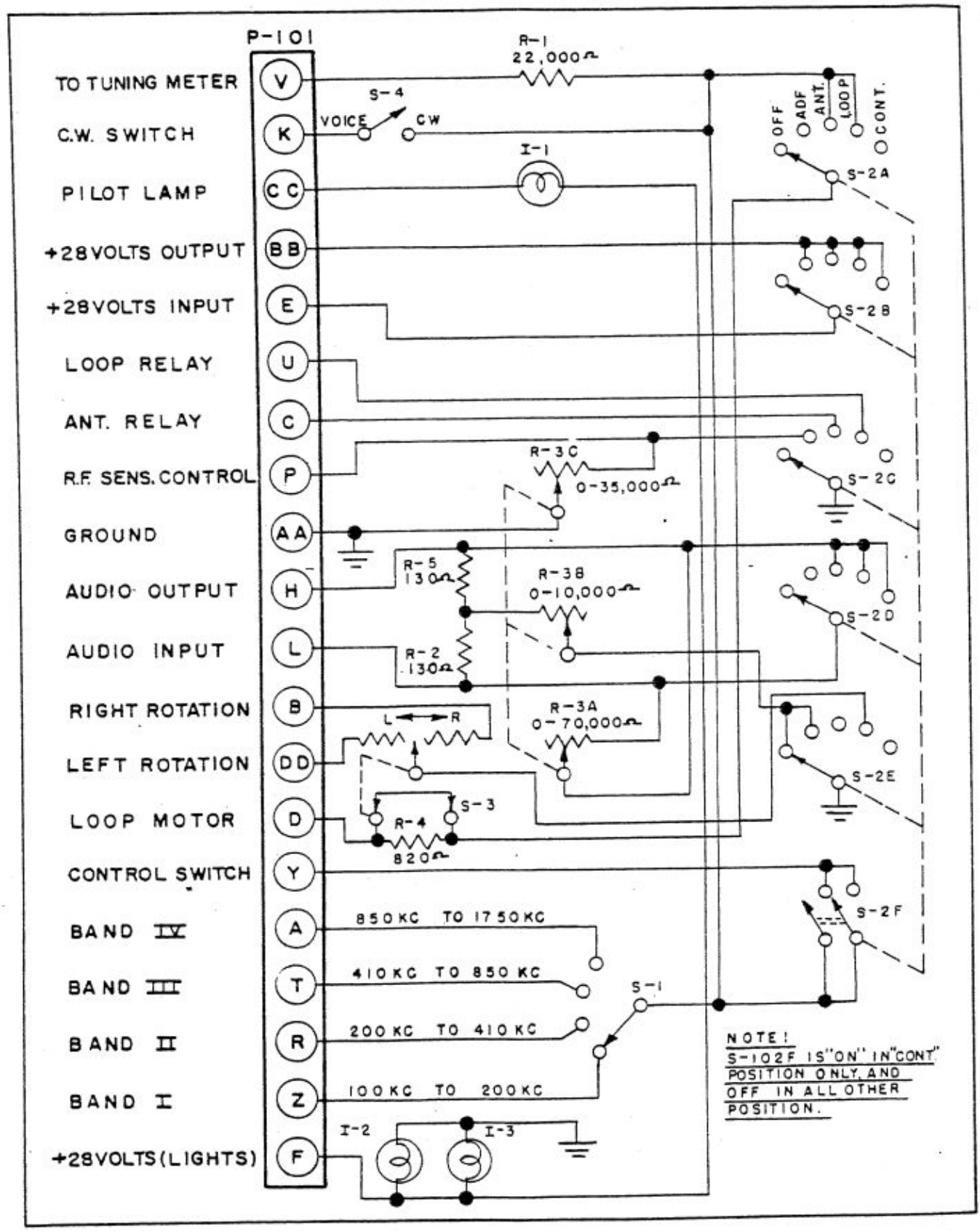

Figure 8-10E. Control Panel C1514/A, Schematic Diagram

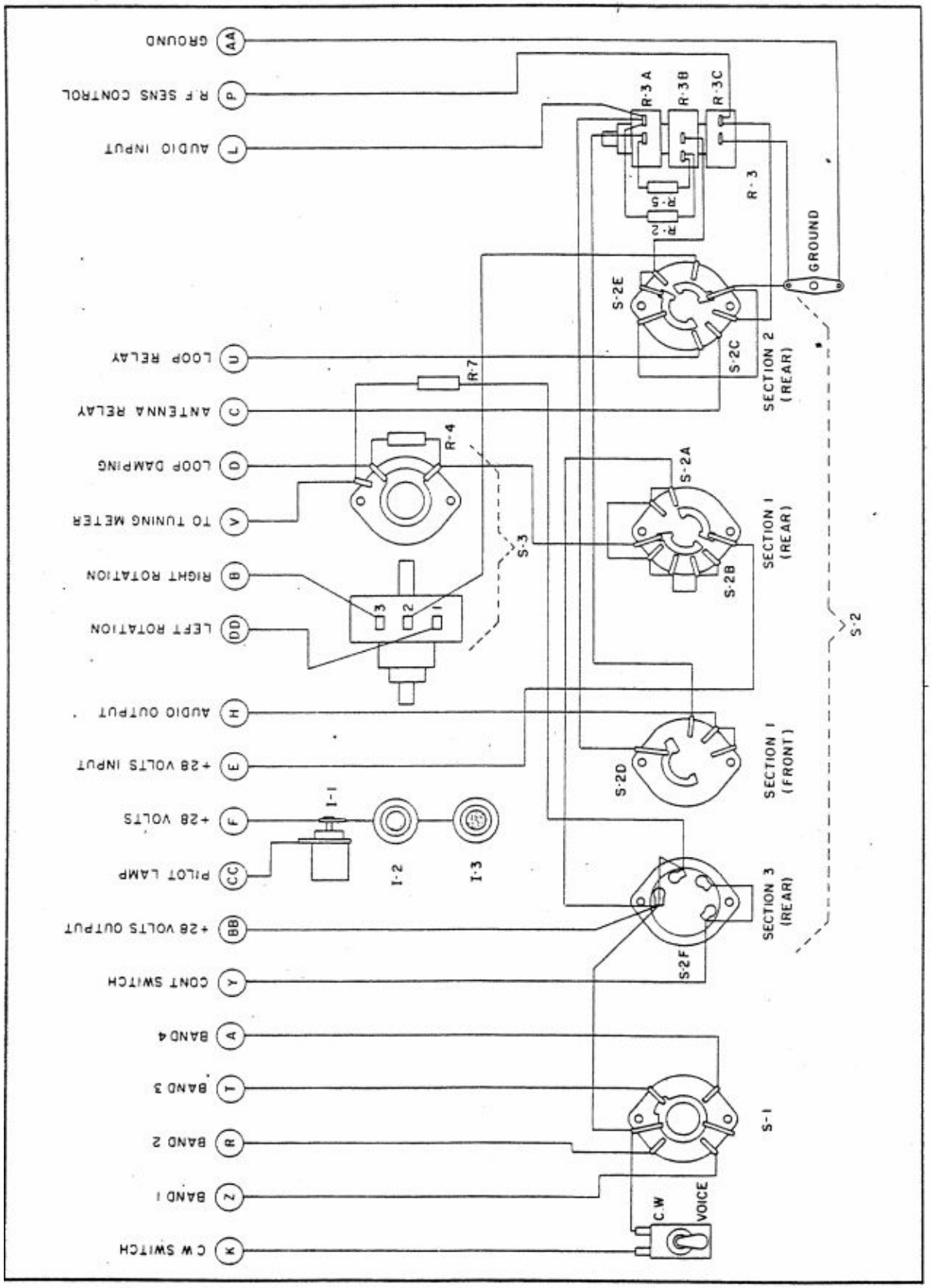

Figure 8-10F. Control Panel C-1514/A, Wiring Diagram

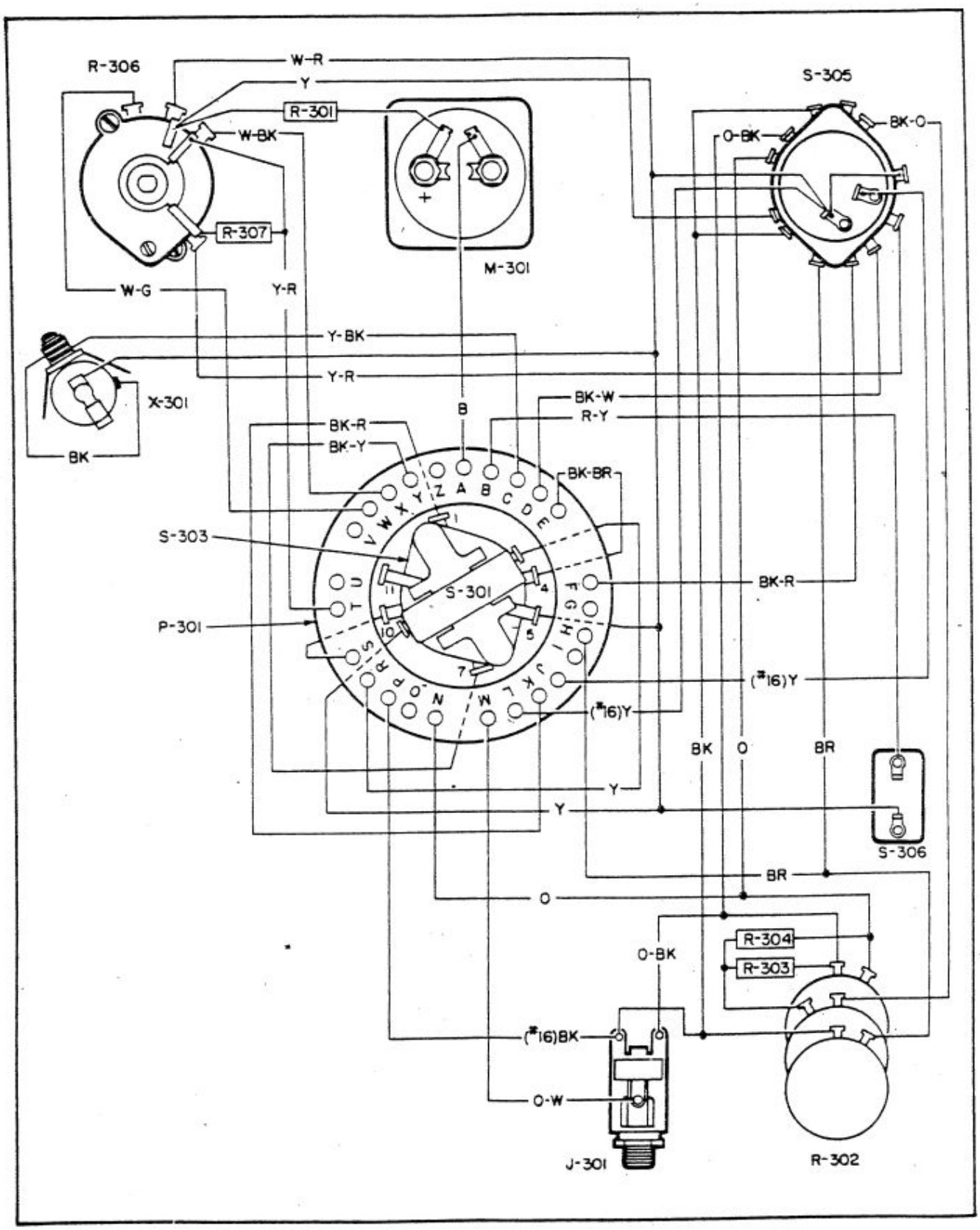

Figure 8-11. Control Box C-149/ARN-6 or C-149A/ARN-6, Wiring Diagram

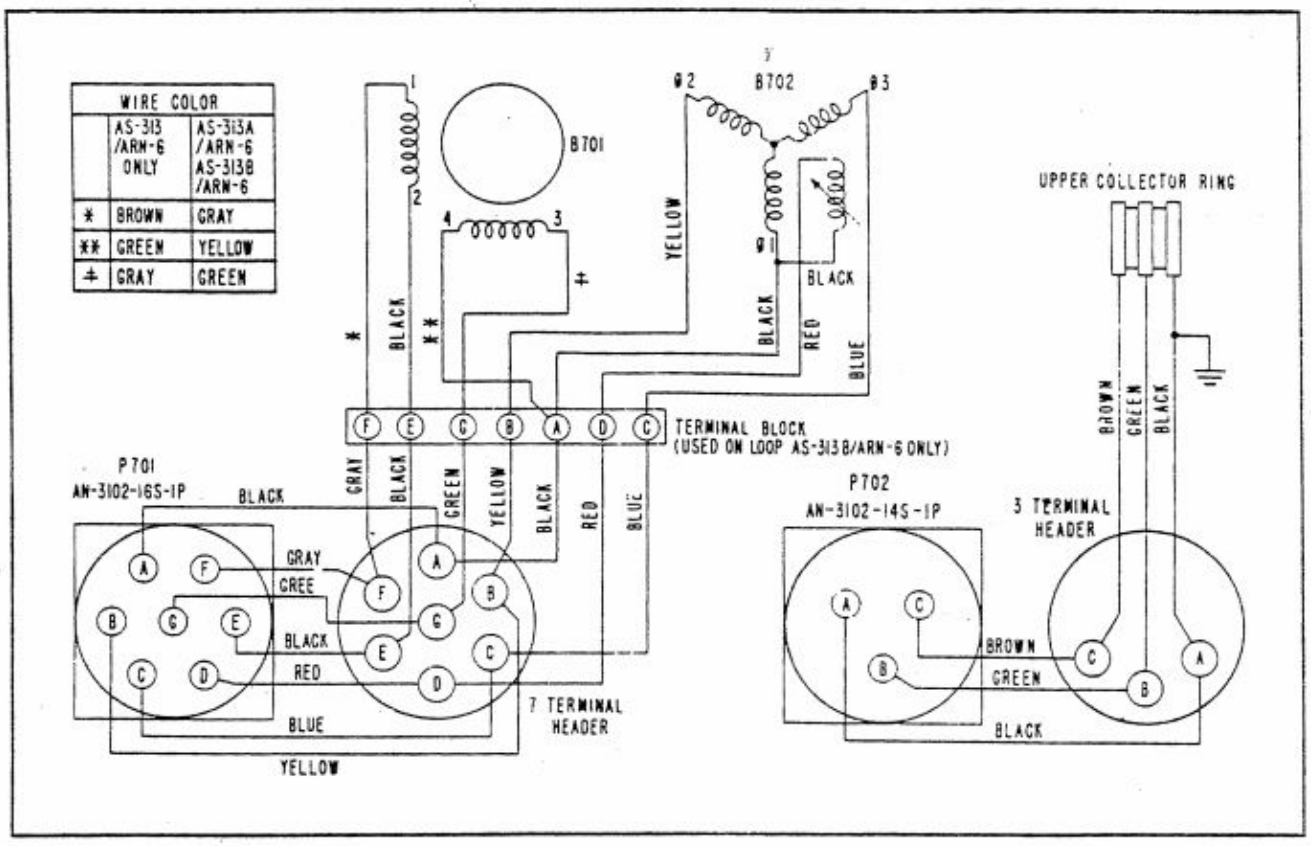

Figure 8-12. Loop AS-313/ARN-6, AS-313A/ARN-6, or AS-313B/ARN-6, Wiring Diagram

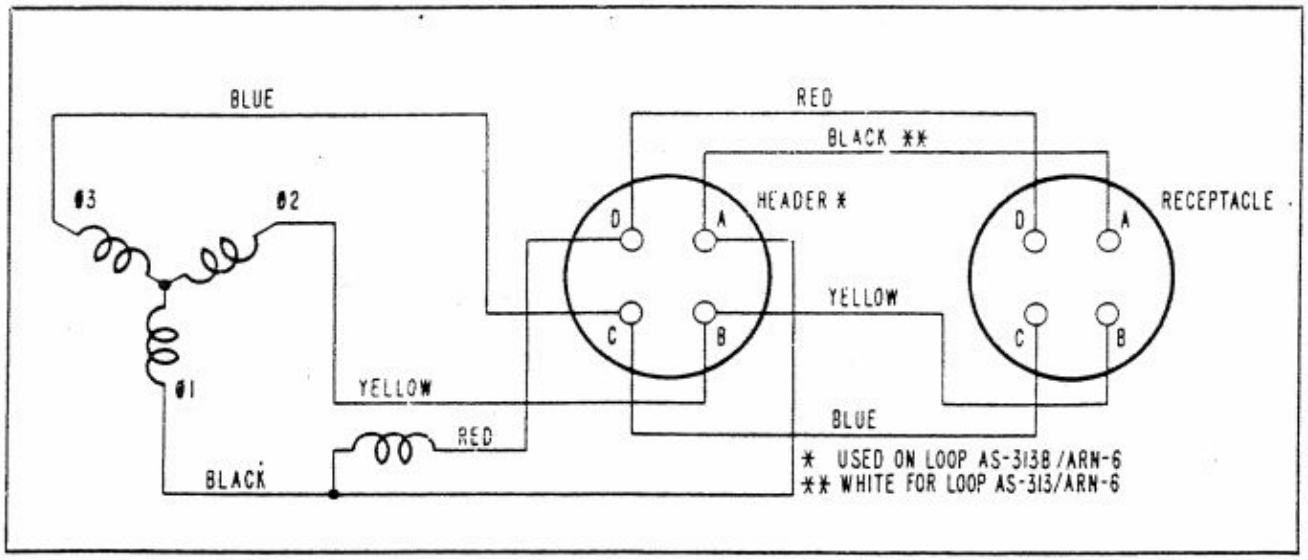

Figure 8-13. Indicator ID-90( )/ARN-6, ID-91( )/ARN-6, ID-92( )/ARN-6, or ID-231( )/ARN-6, Wiring Diagram

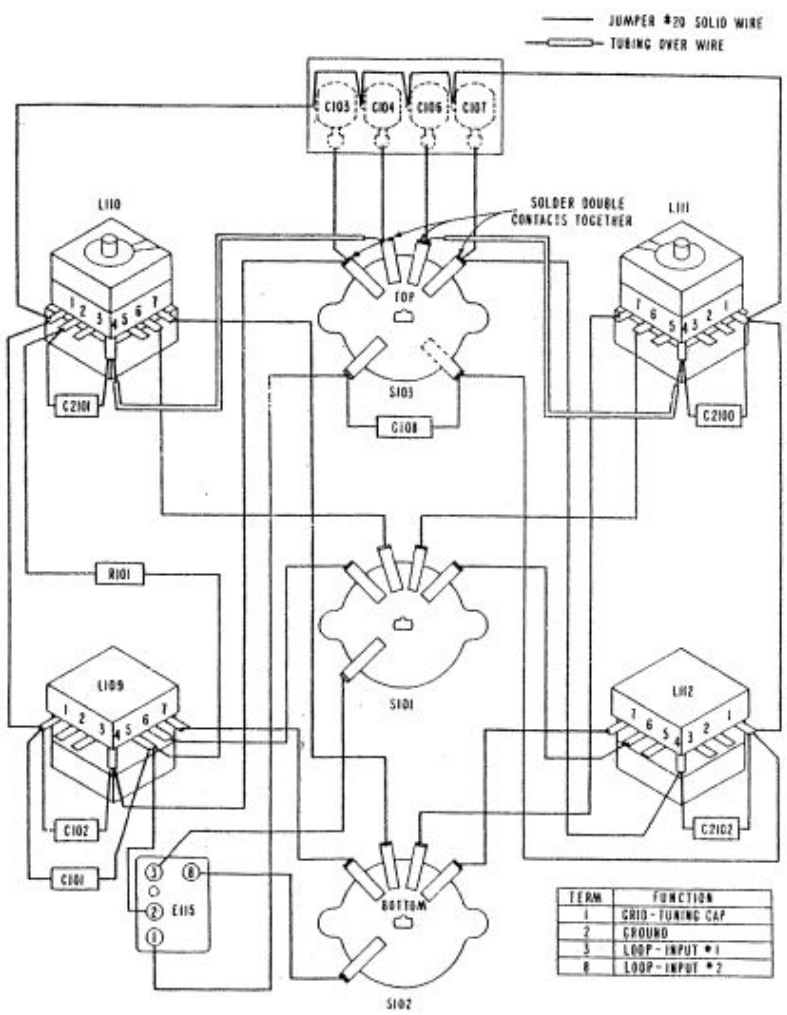

LOOP COIL ASSEMBLY L101

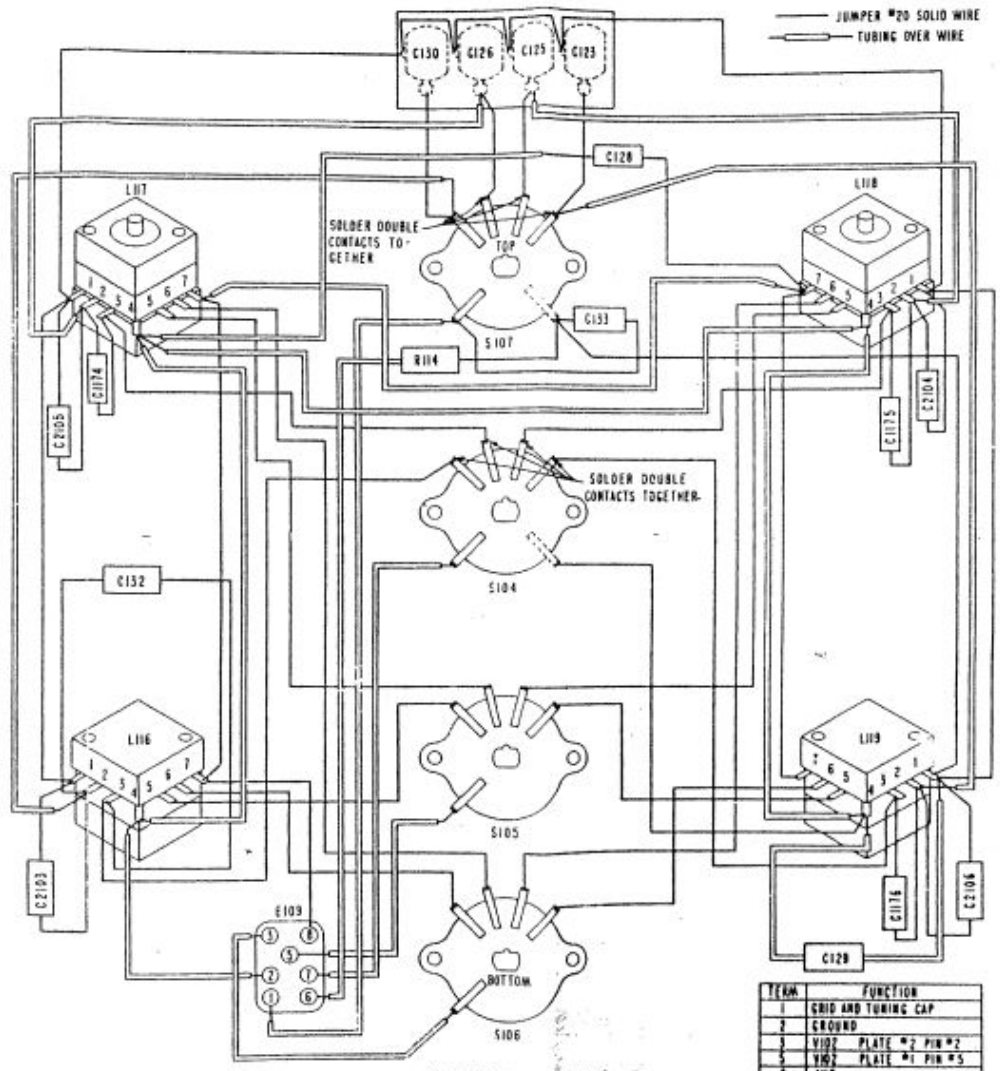

ANTENNA COIL ASSEMBLY L103

Figure 8-14A. Loop Coil Assembly L-101 and Antenna Coil Assembly L-103 Radio Compass Unit R-101B/ARN-6, Wiring Diagram

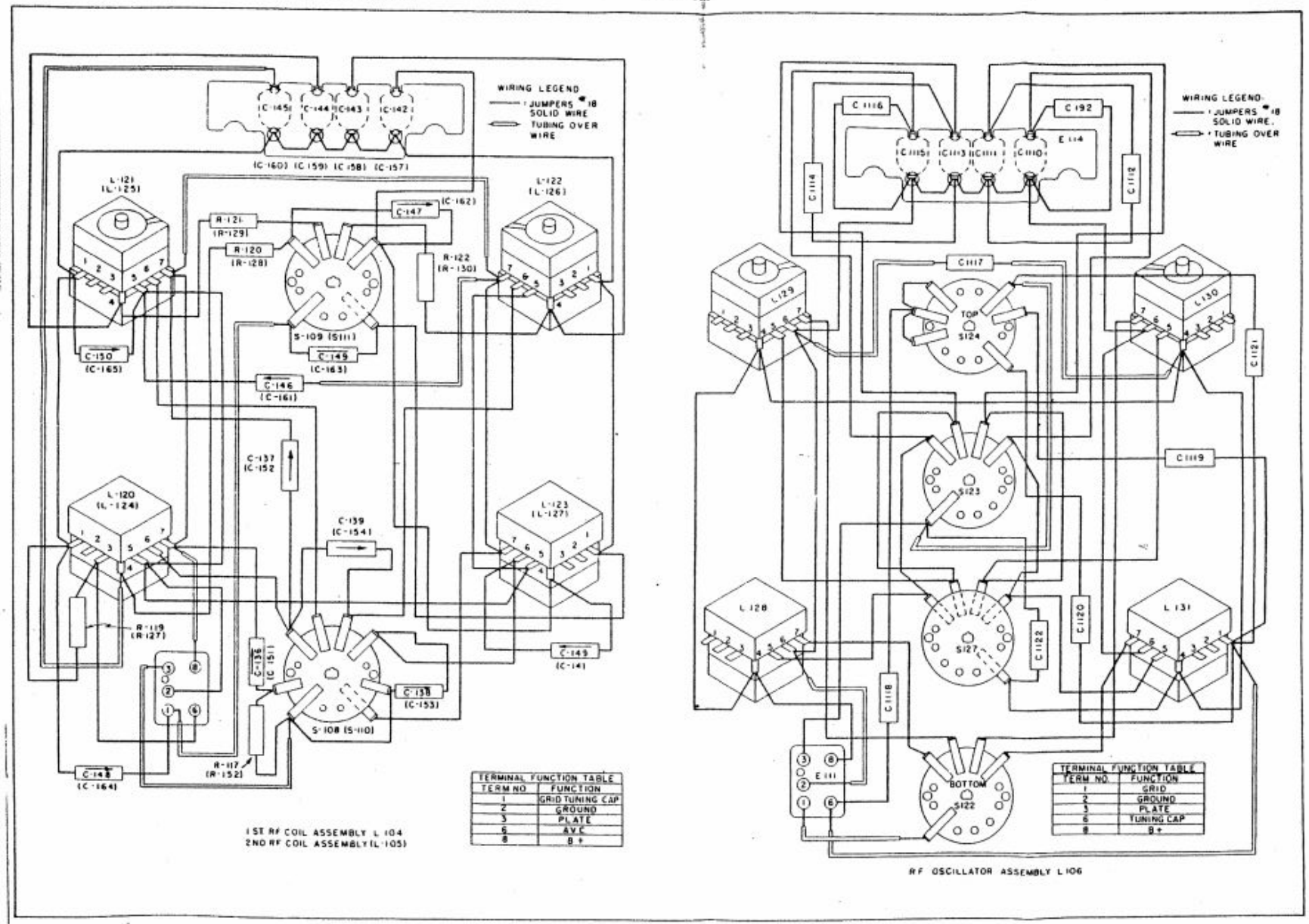

Figure 8-15. First and Second RF Coil Assemblies L-104 and L-105 and RF Oscillator Coil Assembly L-106, Radio Compass Unit R-101/ARN-6 or R-101B/ARN-6, Wiring Diagram

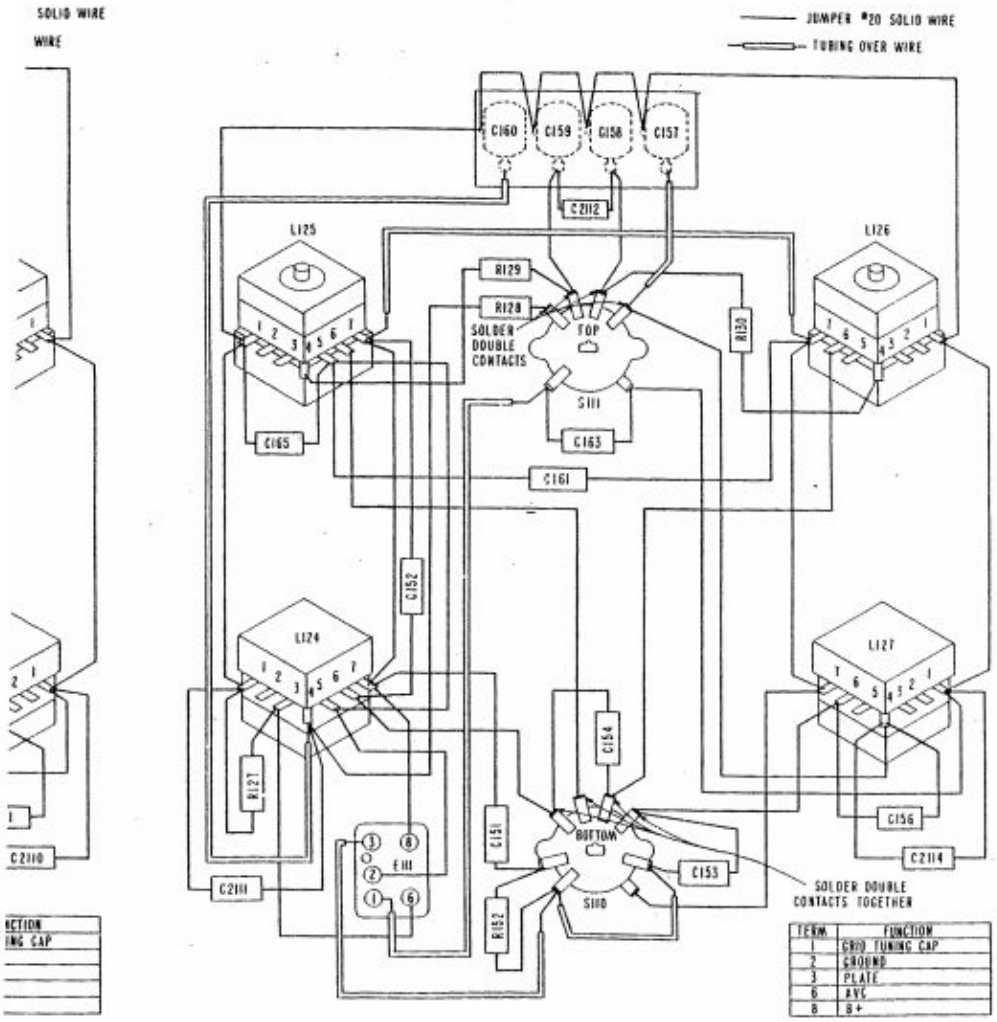

2 ND RF COIL ASSEMBLY L105

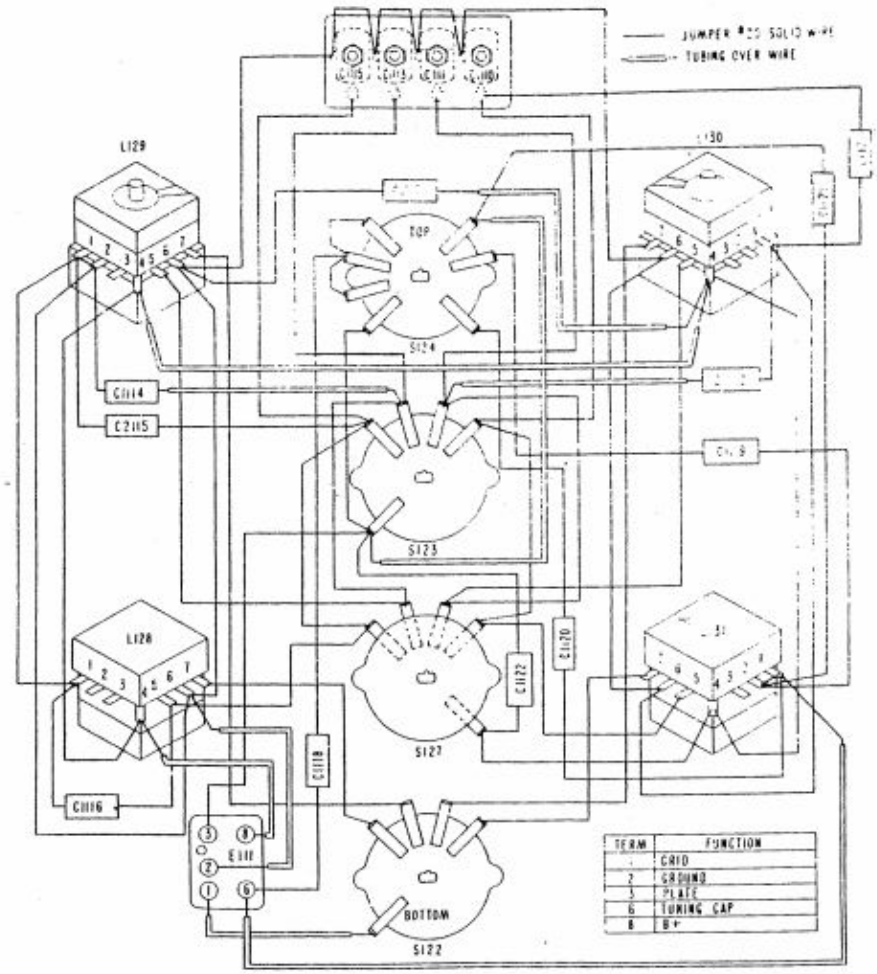

RF OSCILLATOR ASSEMBLY L106

Figure 8-15A. First and Second RF Coil Assemblies L-104 and L-105 and RF Oscillator Coil Assembly L-106, Radio Compass Unit R-101B/ARN-6, Wiring Diagram

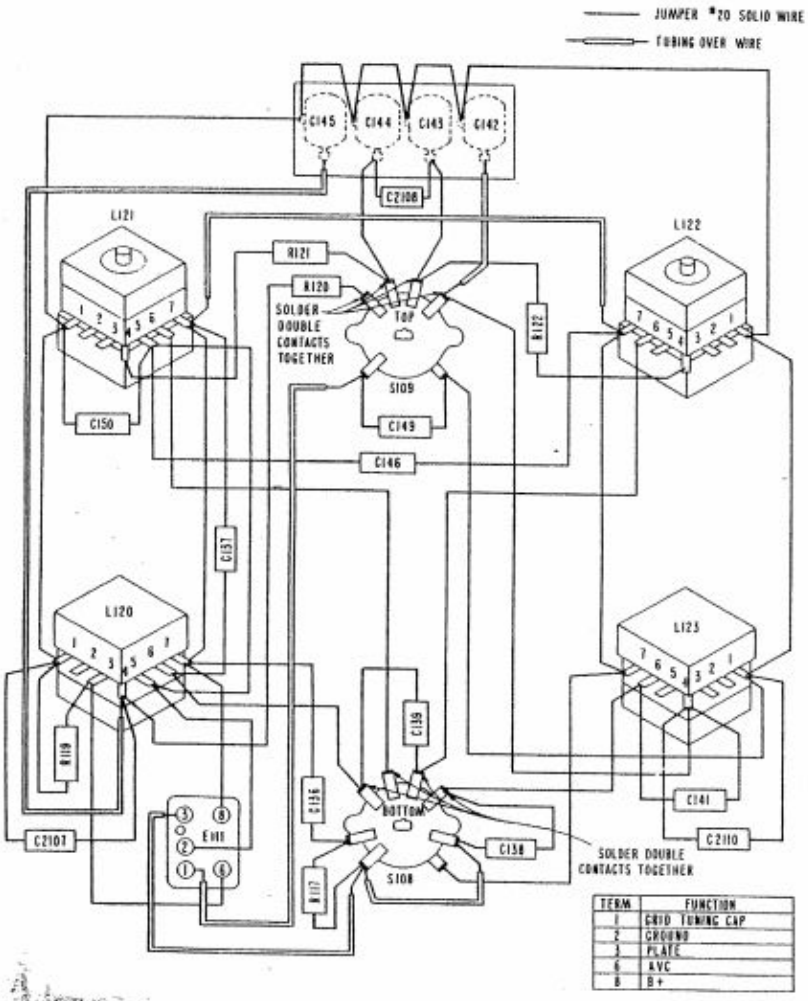

1ST RF COIL ASSEMBLY L104

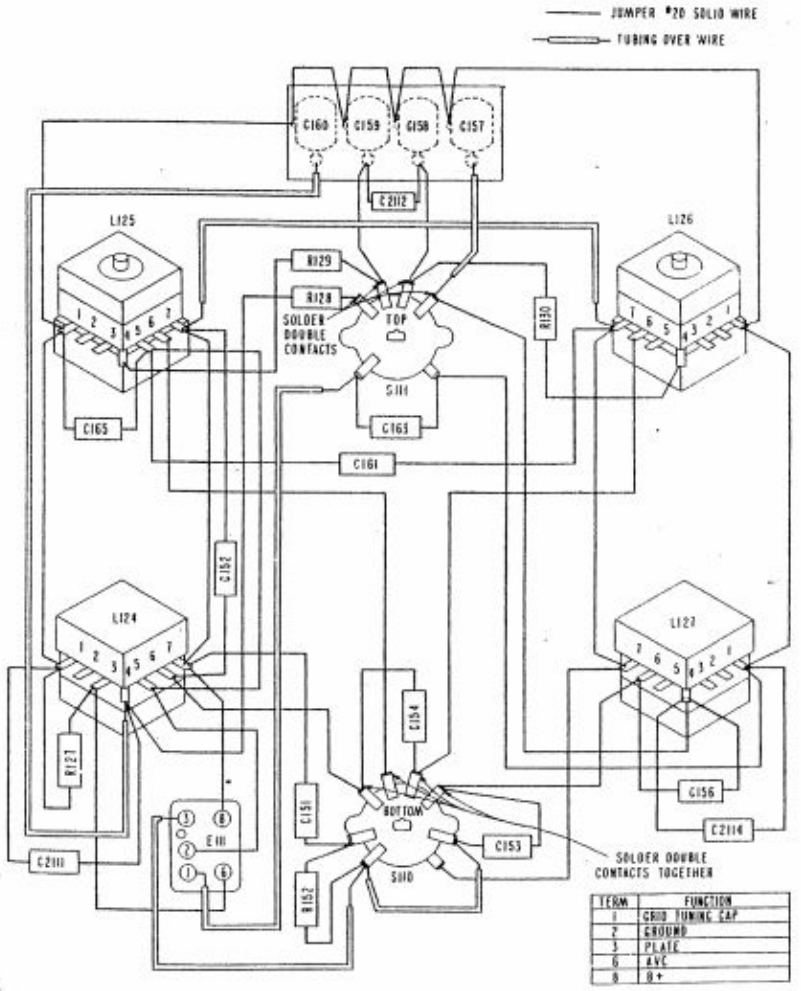

2 ND RF COIL ASSEMBLY L105

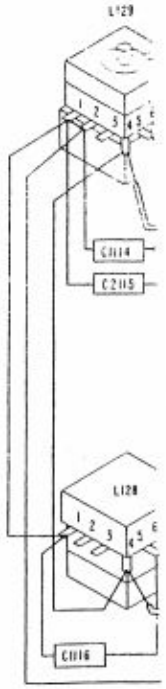

Figure 8-15A. First

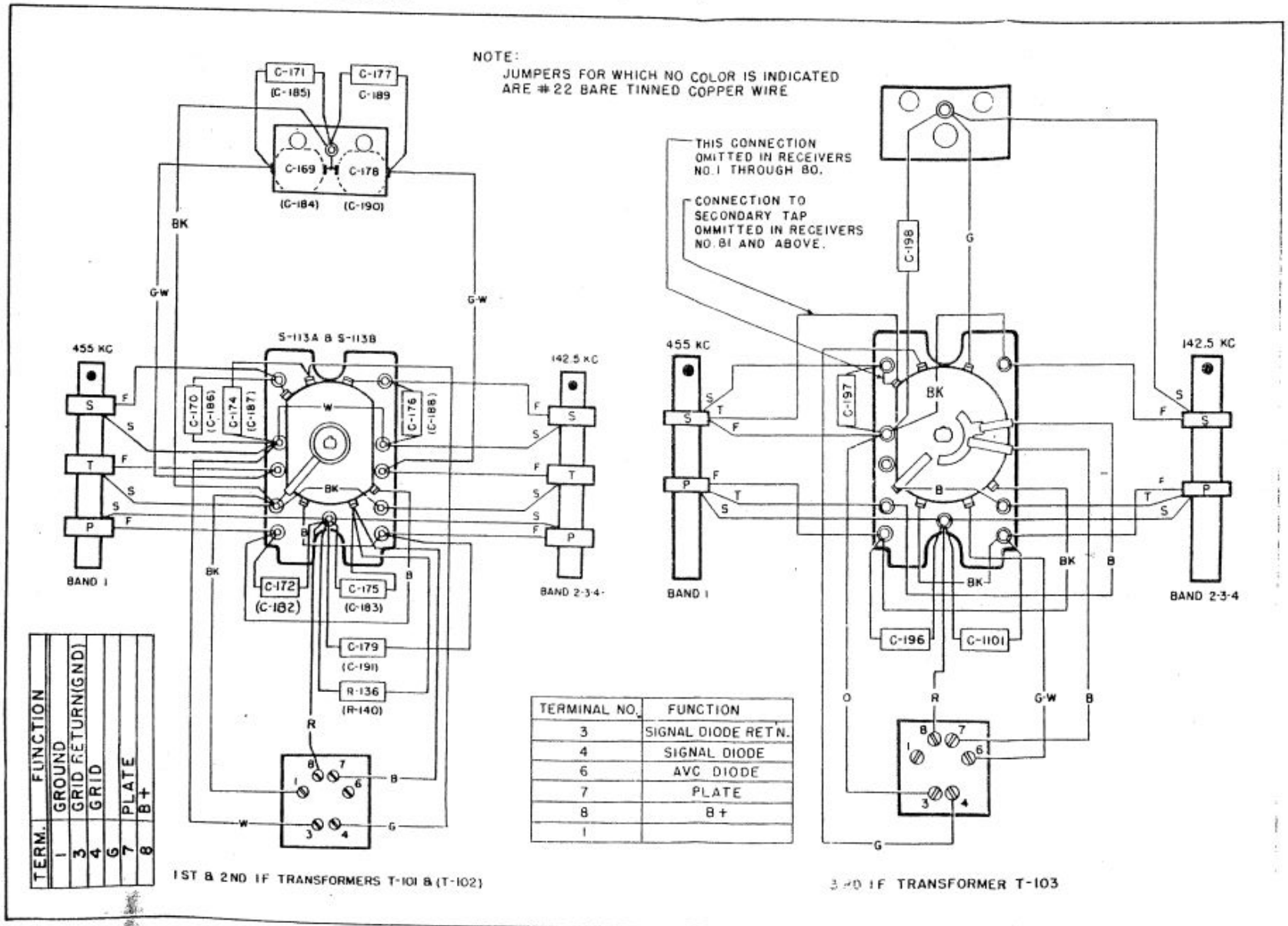

Figure 8-16. First and Second IF Transformers T-101 and T-102 and Third IF Transformer T-103, Wiring Diagram

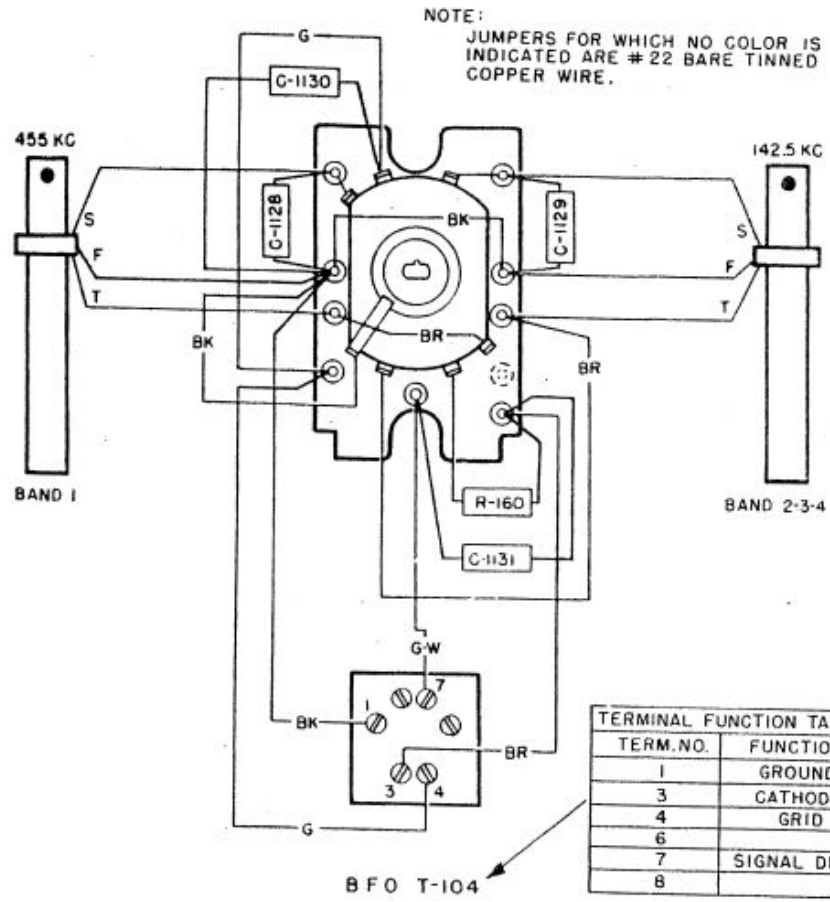

TERMINAL FUNCTION TABLE	
TERM. NO.	FUNCTION
1	GROUND
3	CATHODE
4	GRID
6	
7	SIGNAL DIODE
8	

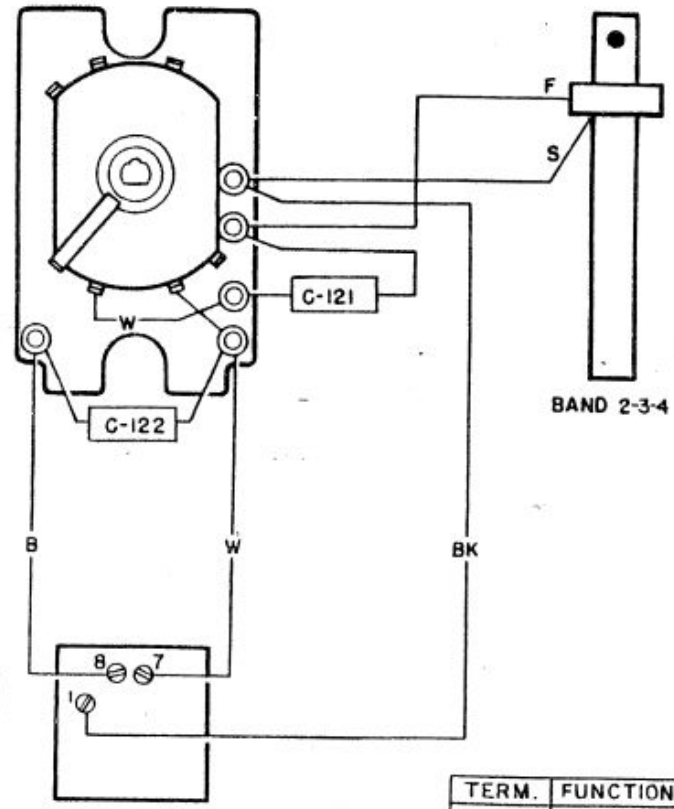

TERM.	FUNCTION
1	GND
7	ANT. COIL
8	ANTENNA

Figure 8-17. Beat-Frequency-Oscillator Coil Assembly T-104 and IF Trap Z-101, Wiring Diagram

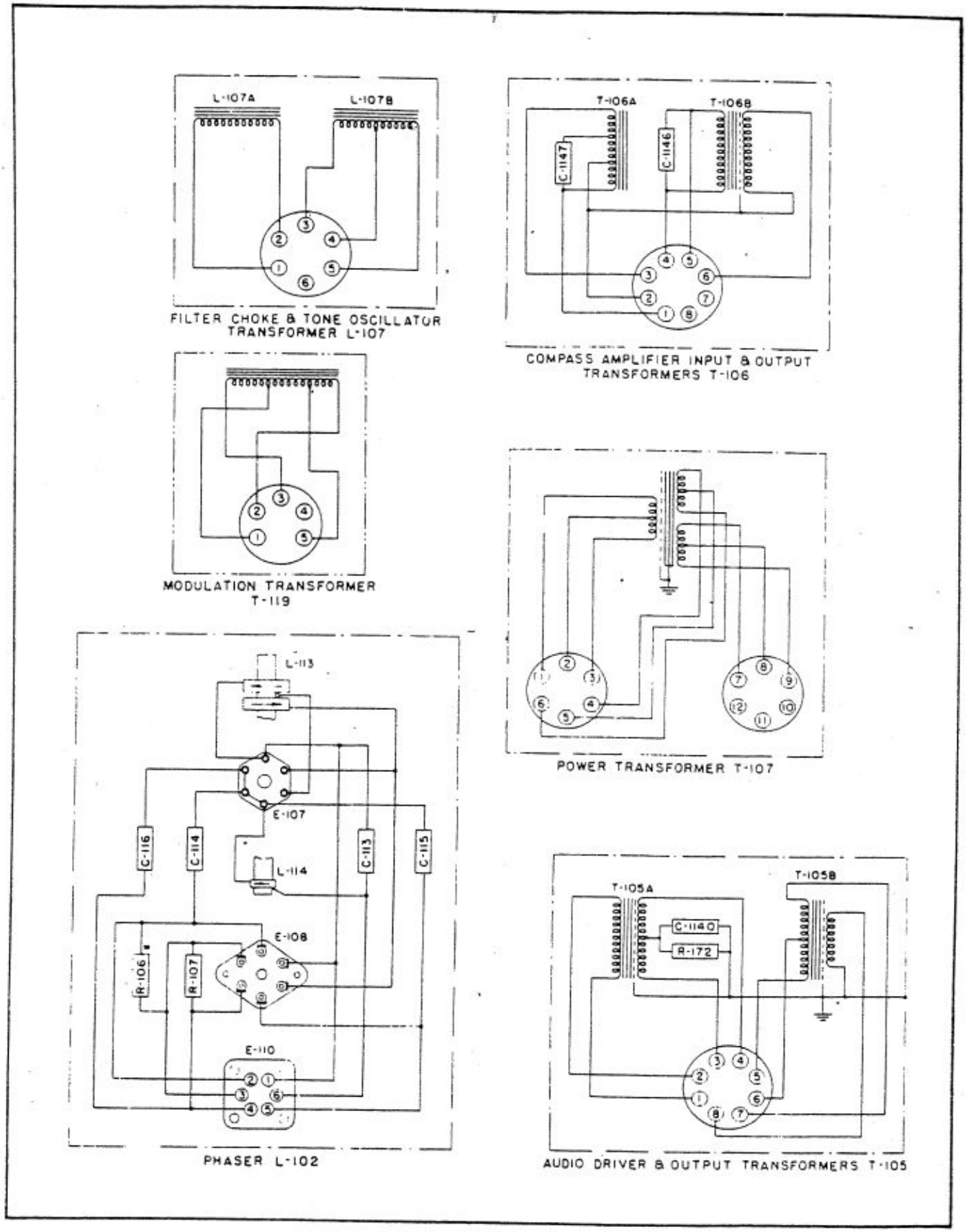

Figure 8-18. Major Sub-Assemblies, Wiring Diagram

By Order of *Wilber M. Brucker*, Secretary of the Army:

MAXWELL D. TAYLOR,
General, United States Army,
Chief of Staff.

Official:

JOHN A. KLEIN,
Major General, United States Army,
The Adjutant General.

Distribution:

Active Army:

CNGB (1)
ASA (3)
Tec Svc, DA (1) except CSIGO (30)
Tec Svc Bd (1)
Hq CONARC (5)
CONARC Bd (Incl en Test Sec) (1)
Army AA Comd (2)
OS Maj Comd (5)
OS Base Comd (5)
Log Comd (5)
MDW (1)
Armies (5)
Corps (2)
Ft & Cp (2)
Sp Wpn Comd (2)
Army Cmt Cen (4)
Gen & Br Svc Sch (5) except Sig Sch (25)
Gen Depots (2) except Atlanta Gen Depot (None)
Sig Sec, Gen Depots (10)
Sig Depots (17)
US Army Tng Cen (2)
POE (OS) (2)
Trans Terminal Comd (2)
Army Terminals (2)
OS Sup Agencies (2)
Army Elct PG (1)
Sig Fld Maint Shops (3)
Sig Lab (5)
ACS (3)
Mil Dist (1)
Units organized under following TOE's:
11-7C, Sig Co, Inf Div (2)
11-16C, Hq & Hq Co, Sig Bn, Corps or Abn Corps (2)
11-57C, Armd Sig Co (2)
11-127R, Sig Rep Co (2)
11-128C, Sig Depot Co (2)
11-500R, Sig Svc Org (2)
11-557C, Abn Sig Co (2)
11-587R, Sig Base Maint Co (2)
11-592R, Hy & Hq Co, Sig Base Depot (2)
11-597R, Sig Base Depot Co (2)

NG: State AG (6); units—same as Active Army except allowance is one copy to each unit.
USAR: None.
For explanation of abbreviations used, see SR 320-50-1.

☆ U. S. GOVERNMENT PRINTING OFFICE: 1956 O—403454