MACKIE®

M1400, M1400i

FR series amplifiers (series II)

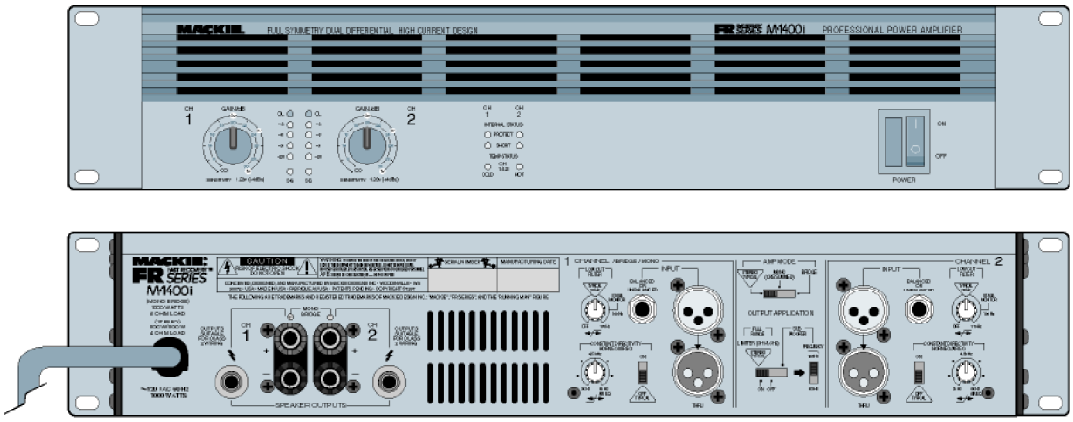

SERVICE MANUAL

©2000 MACKIE DESIGNS, INC.

MACKIE. M1400/M1400i series II SERVICE MANUAL

SERVICE ON THIS EQUIPMENT IS TO BE PERFORMED BY
EXPERIENCED REPAIR TECHNICIANS ONLY
CONFIER L'ENTRETIEN AU PERSONNEL QUALIFIE

CAUTION *AVIS*

RISK OF ELECTRIC SHOCK
DO NOT OPEN
RISQUE DE CHOC ELECTRIQUE
NE PAS OUVRIR

CAUTION: TO REDUCE THE RISK OF ELECTRIC SHOCK DO NOT REMOVE THE COVER (OR BACK)
NO USER SERVICEABLE PARTS INSIDE
REFER SERVICING TO QUALIFIED PERSONNEL

WARNING: TO REDUCE THE RISK OF FIRE OR ELECTRIC SHOCK, DO NOT EXPOSE THIS PRODUCT TO RAIN OR MOISTURE

TO PREVENT ELECTRIC SHOCK, DO NOT USE THIS POLARIZED PLUG WITH AN EXTENSION CORD, RECEPTACLE OR OTHER OUTLET UNLESS THE BLADES CAN BE FULLY INSERTED TO PREVENT BLADE EXPOSURE.

ATTENTION: POUR EVITER LES RISQUES DE CHOC ELECTRIQUE, NE PAS ENLEVER LE COUVERCLE. AUCUN ENTRETIEN DE PIECES INTERIEURES PAR L'USAGER. CONFIER L'ENTRETIEN AU PERSONNEL QUALIFIE.

AVIS:POUR EVITER LES RISQUES D'INCENDIE OU D'ELECTROCUTION, N'EXPOSEZ PAS CET ARTICLE A LA PLUIE OU A L'HUMIDITE.

POUR PREVENIR LES CHOCS ELECTRIQUES NE PAS UTILISER CETTE FICHE POLARISEE AVEC UN PROLONGATEUR, UN PRISE DE COURANT OU UNE AUTRE SORTIE DE COURANT, SAUF SI LES LAMES PEUVENT ETRE INSEREES A FOND SANS LAISSER AUCUNE PARTIE A DECOUVERT.

This apparatus does not exceed the Class A/Class B (whichever is applicable) limits for radio noise emissions from digital apparatus as set out in the radio interference regulations of the Canadian Department of Communications.

ATTENTION :Le présent appareil numérique n'émet pas de bruits radioélectriques dépassant las limites applicables aux appareils numériques de class A/de class B (selon le cas) prescrites dans le réglement sur le brouillage radioélectrique édicté par les ministère des communications du Canada.

This equipment has been tested and found to comply with the limits for a Class A digital device, pursuant to part 15 of the FCC rules. These limits are designed to provide reasonable protection against harmful interference when the equipment is operated in a commercial environment. This equipment generates, uses, and can radiate radio energy and, if not installed properly and used in accordance with the instruction manual, may cause harmful interference to radio communications. Operation of this equipment in a residential area is likely to cause harmful interference in which case the user will be required to correct the interference at his own expense.

The lightning flash with arrowhead symbol within an equilateral triangle is intended to alert the user to the presence of uninsulated "dangerous voltage" within the product's enclosure, that may be of sufficient magnitude to constitute a risk of electric shock to persons.

Le symbole éclair avec point de flèche à l'intérieur d'un triangle équilatéral est utilisé pour alerter l'utilisateur de la présence à l'intérieur du coffret de "voltage dangereux" non isolé d'ampleur suffisante pour constituer un risque d'éléctrocution.

The exclamation point within an equilateral triangle is intended to alert the user of the presence of important operating and maintenance (servicing) instructions in the literature accompanying the appliance.

Le point d'exclamation à l'intérieur d'un triangle équilatéral est employé pour alerter les utilisateurs de la présence d'instructions importantes pour le fonctionnement et l'entretien (service) dans le livret d'instruction accompagnant l'appareil.

CONTENTS

Introduction 3
Overview 4
Safety test 5
Service bulletins 6
Parts A-1

Fold-out Sections
Amplifier board 255-1
Input board 253-1
Display board 254-1
Soft Start board 162-1
Main Assembly Drawings Assembly-1
Amplifier Sub-assembly Drawings Sub-1

INTRODUCTION

- **What's all this "series II" stuff anyway**?

  The designation "series II" is an internal Mackie way of describing the new M1400 and M1400i amplifiers built after June 1999. You will not see "series II" written on any of the advertising, boxes or silkscreens. One clue is that the series II amps do not have handles.

  The serial number prefix also indicates if the amplifier is a series I or II:
  The M1400 Series I serial numbers start with a prefix "AH," (use the other M1400 service manual)
  The M1400 Series II serial numbers start with a prefix "DB" (use this manual)
  M1400i Series I serial number prefix is "AM" (use the other M1400 service manual)
  M1400i Series II serial number prefix is "DA" (use this manual)

SERVICE ON THIS EQUIPMENT IS TO BE PERFORMED BY
EXPERIENCED REPAIR TECHNICIANS ONLY
CONFIER L'ENTRETIEN AU PERSONNEL QUALIFIE

This manual contains basic service information. It is essential that you have a copy of the user's manual as this contains the complete operating instructions.

SERVICE TECHNICAL ASSISTANCE

Mackie Designs, Service Technical Assistance, is available 8AM - 5PM PST, Monday through Friday for Authorized Mackie Service Centers, at 1-800-258-6883. Feel free to call with any questions and speak with a carefully-calibrated technician. If one is not available, leave a detailed message and a qualified Mackoid will return your call asap.

DISCLAIMER

The information contained in this manual is proprietary to Mackie Designs, Inc. The entire manual is protected under copyright and may not be reproduced by any means without express written permission from Mackie Designs, Inc.

Overview

M1400 and M1400i power amps built after June 15, 1999 have some rather lovely improvements. These include:

1. **Higher output fan for increased cooling** – The old fan which has an output of 51 CFM has been replaced with a new hi-performance Panasonic FBA0824H1T fan that has 62 CFM output. This improves the M1400/1400i's cooling capacity by 20%, allowing them to run in an environment 14°F hotter than previously without overheating.

2. **Higher voltage tolerance** – the four main filter capacitors have been increased in voltage rating from 80V to 82V. This improves the ability of the M1400/1400i to handle installations and gigs where the AC line voltage is higher than normal.

3. **Improved speaker protection circuitry** – Previously, under certain unusual conditions, (such as the SeaHawks winning an away game), the protection circuits could shut down the amplifier. The circuit is redesigned so instead of shutting down, the amplifier will mute for two seconds and then begin operation again.

4. **Other improvements**– The new designs have improved reliability by changing the design surrounding the driver transistors, specifying higher quality main 30A bridges, removing all soldered-in multi-pin cable assemblies in favor of more reliable (and more expensive) header to receptacle interconnections, increasing the robustness of the +/-16V power supplies, and redesigning the baker clamp for improved high power operation.

5. **New circuit boards**– The new designs have new circuit boards.

6. **Handles Removed**– The new designs have no handles on the front panel. This is also a quick way of telling if the amplifier is a series II design or not.

7. **Service Manual** The old service manual contains many details which still apply, such as circuit theory and troubleshooting. This series II manual is just a basic guide to the new schematics, pcbs, assembly drawings and parts lists.

8. **Owner's Manual**– The owner's manual was only mildly altered to reflect the new model, so all details of the amplifier's operation are correct.

9. **Service bulletin**– The ribbon modification still applies to the "series II" models. See the last page of this service manual.

Safety test

You must perform the following leakage test before returning the unit to your customer. Take every safety precaution to protect yourself while doing this test.

1. Make a small loading RC circuit as shown in the diagram below, and connect the AC volt meter between the AC power source ground and any exposed metal on the unit under test.

2. Connect the unit under test to an AC power source using a ground-lift adaptor, leaving the unit's safety ground floating. Turn the unit on.

3. The meter reading should be less than 750mVAC (note: this is equivalent to 0.5mA of leakage current).

4. Flip the plug over in the receptical so the hot and neutral are swapped. Verify that the reading is still less then 750mVAC.

5. If either reading is greater than 750mVAC, then you must investigate and repair the unit before returning it to your customer.

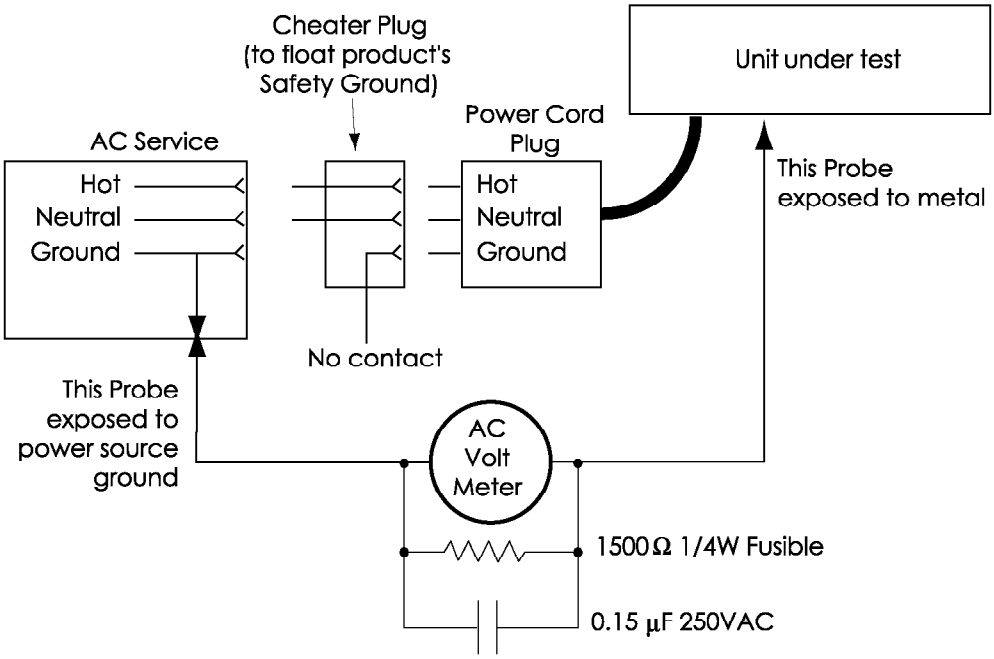

PARTS LIST

Parts Numbering guide

040-	Cables
055-	Finished PCB Assy
100-	Pots and resistors
200-	Capacitors
300-	Semiconductors
400-	Jacks/Connectors
500-	Switches
510-	Fuses
550-	Chassis Metalwork
600-	Transformers
601-	Inductors
610-	Wires and Cables
640-	AC line cords
700-	Hardware
760-	Knobs/Plastic
770-	Fans
790-	Misc./Packing
800-	Printed Material
860-	EPROM

PART#	DESCRIPTION	PAGES
090-137-XX	M1400 assembly	A-2
080-149-00	Heatsink subassembly	A-3
090-134-00	M1400i assembly	A-4
080-143-00	Heatsink subassembly	A-5
055-253-00	Input board	A-6
055-254-00	Display board	A-7
055-255-00	Amplifier board	A-8
055-162-00	Soft Start board	A-11

⚠ Components noted with this symbol shall be replaced only by the component specified. This is required to maintain product safety.

Master Parts List 090-137-XX M1400 series II

Part #	Description	Rev	Qty	
090-137-00	M1400 SERIES II 120V	A6 A2	1	
090-137-01	M1400 SERIES II 230V	A6 A2	1	
090-137-02	M1400 SERIES II 100V	A6 A2	1	
⚠ 040-359-00	RIB 28GA 20C 4.25IN PLZD	C	1	
⚠ 040-360-00	RIB 28GA 20C 18IN PLZD	C	1	
⚠ 055-162-01	PCB ASSY SOFT START 240V	A1	1	FOR 240VAC VERSION. SEE PAGE 11
⚠ 055-162-02	PCB ASSY SOFT START 100V	A1	1	FOR 100VAC VERSION. SEE PAGE 11
⚠ 055-253-00-01	PCB ASSY INPUT	A2 A2	1	SEE PAGE 6
⚠ 055-254-00-01	PCB ASSY DISPLAY	A2 A2	1	SEE PAGE 7
⚠ 080-035-00	PWR SW HARNESS - AMP	A	1	
⚠ 080-149-00	SA HTSK M1400 SERIES II	A6 A2	1	
⚠ 080-154-00	SA XFMR 120V 1400/1400 I	A1 A1	1	FOR 120VACVERSION
⚠ 080-154-01	SA XFMR 230V 1400/1400 I	A1 A1	1	FOR 230VACVERSION
⚠ 080-154-02	SA XFMR 100V 1400/1400 I	A1 A1	1	FOR 100VACVERSION
⚠ 500-022-00	SWITCH, ROCKER ILLUMINATED	A	1	
⚠ 510-017-00	FUSE SB 20A 3AB 1/4X1-1/4	A	1	FOR 120VAC AND 100VAC VERSIONS
⚠ 510-023-00	FUSE SB 8A 3AB 1/4X1-1/4	A	1	FOR 230VACVERSION
550-247-00	SHIELD INPUT - M1200	A	1	
550-249-00	PLATE XFMR .335IDX4.528OD	A	AR	
550-294-00	BRACKET FOR SOFT START	A	1	FOR 230VAC AND 100VAC VERSIONS
550-470-00	PNT CHASSIS M1400-PRO	A	1	
550-564-00	PNT TOP COVER M1400-I-PRO	A	1	
550-566-00	PNT SIDE RIGHT M1400-I-PR	A	1	
550-568-00	PNT LEFT SIDE M1400-I-PRO	A	1	
551-029-10	EXTR SCRN DSPLY BZL-M1400	D	1	
⚠ 640-006-00	LC 15A 125V SJT 14GA 6FT7	D	1	LINECORD FOR 120VACVERSION
⚠ 640-007-02	LC EXPORT - JAPANESE	D	1	LINECORD FOR 100VACVERSION
⚠ 640-007-01	LC EXPORT - EUROPEAN	D	1	LINECORD FOR 230VACVERSION
700-011-00	MCH 4-40X1/4 BTNSKT BLKOX	A	6	
700-028-01	SEMS 6-32X5/16 PHP BLKZC	B	36	
700-041-04	MCH 6-32X3/8 FL 100DG BLK	A	8	
700-050-04	MCH 6-32X3/8 FIL PH IL CLR	A	2	
700-085-03	SCR PHP M3X6 STL BLK ZC	A	4	
700-086-00	TF 6-32X3/8 FL 100DG BLK	A	3	
700-106-00	BOLT HEX 5/16X23/4 ZC GD5	A	1	
701-016-00	5-20X5/16 PHPII TYP B BLK	A	8	
701-022-01	#4X5/16 PHP II TYP B BLK	B	4	
705-001-00	KEPNUT 6-32	A	2	
705-019-00	NUT STOVFR LOCK 5/16X18	A	1	
710-002-00	WASHER-SPLD W/400-214-00	A	AR	
710-024-00	WASH FLAT 5/16 HARD (USS)	A	2	
730-016-00	LOCTITE 242	A	AR	
730-026-00	ADHESIVE RTV162	A	AR	
740-001-00	TYRAP 3-1/4L	A	2	
740-003-00	TYRAP 8IN BLK	A	2	
740-004-00	STRAIN RELIEF HEYCO 1244	A	1	
760-048-04	KNOB 9MM DARK GRAY	B	4	
760-061-00	KNOB VOLUME AMPS	A	2	
780-042-00	INSUL MYLAR INPUT SHIELD	A	1	
780-111-00	WASH RUB (W/TRANSFORMER)	A	2	
790-002-00	BAG POLY 12 X 18 2MIL	A	1	
790-022-00	POLY-SHEET 52CF X 26 4MIL	A	1	
800-160-00	BOX M1400 SER II	A	1	
800-161-00	M1400 BOX SLEEVE SER II	A	1	
810 056 00	INST TOP/BOTTOM AMP		2	
820-062-11	OWN MNL M1400	A	1	

⚠ Components noted with this symbol shall be replaced only by the component specified. This is required to maintain product safety.

Heatsink sub assy 080-149-00

Part #	Description	Rev	Qty	
080-149-00	SA HTSK M1400 SERIES II	A6 A2	1	
040-209-00	RIB 28GA 10C 11.5 PLZD	C	1	
⚠ 055-255-01-01	PCB ASSY MAIN M1400	A6 A2	1	SEE PAGE 8. THIS HAS SPEAKON OUTPUTS
⚠ 220-059-00	LYT 12000UF 20% 82V 35X60	A	4	NOTE THAT THIS IS 12,000 UF
400-083-00	2P .100X1 22GA END	B	1	
⚠ 410-003-00	INSL SILPAD K6 W/ADHESIVE	A	8.2	
⚠ 410-006-00	INSL SILPAD W/O ADHESIVE	B	1	
550-237-00	SPRING CLIP SUBSINK-M1200	A	2	
550-255-00	PIGGYBACK CLIP	A1	1	
550-467-00	BRKT SUBSINK M1400 PRO	A	2	
550-468-00	COWLING HTSINK M1400 PRO	A	1	
550-469-00	BRKT FAN M1400 PRO	A	1	
551-085-00	EXTR FAB HEATSINK M1400PR	A	1	
700-010-00	TF 6-32X1/4 PHP BLKZC	A	3	
700-010-04	TF 6-32X3/8 PHP BLKZC	A	8	
700-028-02	SEMS 6-32X3/8 PHP BLKZC	B	10	
700-087-00	TF 4-40X5/8 TORX 1/4 WASH	A	5	
700-088-00	TF 4-40X5/8 TORX 3/8 WASH	A	18	
700-122-00	SS-8-32X1/4 PHP PH BLK OX		4	
705-024-00	NUT 8-32 SMALL DIA	A	4	
710-013-00	WASH FLAT NO.6 FIBRE	A	4	
730-001-00	THERMAL JOINT COMPOUND	A	AR	
730-003-00	ADHESIVE INDSTRI 3M 4799	A	AR	
730-025-00	LOCTITE 222	A	AR	
730-026-00	ADHESIVE RTV162	A	AR	
⚠ 770-007-00	FAN 80MM 24VDC-PANASONIC	B	1	
780-136-00	FOAM INSL FAN M1400 II	A	1	

Master Parts List 090-134-00 M1400i series II, 120v

Part #	Description	Rev	Qty	
090-134-00	M1400-I SERIES II 120V	A6 A2	1	
⚠ 040-359-00	RIB 28GA 20C 4.25IN PLZD	C	1	
⚠ 040-360-00	RIB 28GA 20C 18IN PLZD	C	1	
⚠ 055-253-00-01	PCB ASSY INPUT	A2 A2	1	SEE PAGE 6
⚠ 055-254-00-01	PCB ASSY DISPLAY	A2 A2	1	SEE PAGE 7
⚠ 080-035-00	PWR SW HARNESS	A	1	
⚠ 080-143-00	SA HTSK M1400-I SERIES II	A6 A2	1	SEE PAGE 5
⚠ 080-154-00	SA XFMR 120V 1400/1400 I	A1 A1	1	
⚠ 500-022-00	SWITCH, ROCKER ILLUMINATED	A	1	
⚠ 510-017-00	FUSE SB 20A 3AB 1/4X1-1/4	A	1	
550-247-00	SHIELD INPUT - M1200	A	1	
550-249-00	PLATE XFMR .335IDX4.528OD	A	AR	
550-564-00	PNT TOP COVER M1400-I-PRO	A	1	
550-565-00	PNT CHASSIS M1400-I-PRO	A	1	
550-566-00	PNT SIDE RIGHT M1400-I-PR	A	1	
550-568-00	PNT LEFT SIDE M1400-I-PRO	A	1	
551-029-20	EXTR SCRN DSPL BZL M1400I	D	1	
⚠ 640-006-00	LC 15A 125V SJT 14GA 6FT7	D	1	LINECORD
700-011-00	MCH 4-40X1/4 BTNSKT BLKOX	A	6	
700-028-01	SEMS 6-32X5/16 PHP BLKZC	B	36	
700-041-04	MCH 6-32X3/8 FL 100DG BLK	A	7	
700-050-04	MCH 6-32X3/8 FH PHI CLR	A	2	
700-085-03	SCR PHP M3X6 STL BLK ZC	A	4	
700-086-00	TF 6-32X3/8 FL 100DG BLK	A	3	
700-106-00	BOLT HEX 5/16X23/4 ZC GD5	A	1	
701-016-00	5-20X5/16 PHPII TYP B BLK	A	8	
705-001-00	KEPNUT 6-32	A	2	
705-003-00	NUT HEX-SPLD W/400-214-00	A	AR	
705-015-00	NUT SLOT NCKL	A	2	
705-019-00	NUT STOVER LOCK 5/16X18	A	1	
710-002-00	WASHER-SPLD W/400-214-00	A	AR	
710-019-00	WASH FIBRE BLK	A	2	
710-024-00	WASH FLAT 5/16 HARD (USS)	A	2	
730-016-00	LOCTITE 242	A	AR	
730-026-00	ADHESIVE RTV162	A	AR	
740-001-00	TYRAP 3-1/4L	A	2	
740-003-00	TYRAP 8IN BLK	A	2	
740-004-00	STRAIN RELIEF HEYCO 1244	A	1	
750-001-00	BUMPON ROUND BLK .63X.31	A	4	
760-048-04	KNOB 9MM DARK GRAY	B	4	
760-061-00	KNOB VOLUME AMPS	A	2	
780-042-00	INSUL MYLAR INPUT SHIELD	A	1	
780-111-00	WASH RUB (W/TRANSFORMER)	A	2	
790-002-00	BAG POLY 12 X 18 2MIL	A	1	
790-022-00	POLY-SHEET 52CF X 26 4MIL	A	1	
800-158-00	BOX M1400-I SERIES II	A	1	
800-159-00	M1400I BOX SLEEVE SER II	A	1	
810-056-00	INST TOP/BOTTOM - AMP		2	
820-062-14	OWN MANUAL M1400I ENGDOM	A	1	

Components noted with this symbol shall be replaced only by the component specified. This is required to maintain product safety.

Heatsink sub assy 080-143-00

Part #	Description	Rev	Qty	
080-143-00	SA HTSK M1400-I SERIES II	A6 A2	1	
040-209-00	RIB 28GA 10C 11.5 PLZD	C	1	
⚠ 055-255-02-01	PCB ASSY MAIN M1400-I	A6 A2	1	SEE PAGE 8. THIS HAS 1/4" OUTPUTS
⚠ 220-058-00	LYT 10000UF 20% 82V 35X60	A	4	NOTE THAT THIS IS 10,000 UF
400-083-00	2P .100X1 22GA END	B	1	
⚠ 410-003-00	INSL SILPAD K6 W/ADHESIVE	A	8.2	
⚠ 410-006-00	INSL SILPAD W/O ADHESIVE	B	1	
550-237-00	SPRING CLIP SUBSINK-M1200	A	2	
550-255-00	PIGGYBACK CLIP	A1	1	
550-467-00	BRKT SUBSINK M1400 PRO	A	2	
550-468-00	COWLING HTSINK M1400 PRO	A	1	
550-469-00	BRKT FAN M1400 PRO	A	1	
551-085-00	EXTR FAB HEATSINK M1400PR	A	1	
700-010-00	TF 6-32X1/4 PHP BLKZC	A	3	
700-010-04	TF 6-32X3/8 PHP BLKZC	A	8	
700-028-02	SEMS 6-32X3/8 PHP BLKZC	B	10	
700-087-00	TF 4-40X5/8 TORX 1/4 WASH	A	5	
700-088-00	TF 4-40X5/8 TORX 3/8 WASH	A	18	
700-122-00	SS-8-32X1/4 PHP PH BLK OX		4	
705-024-00	NUT 8-32 SMALL DIA	A	4	
710-013-00	WASH FLAT NO.6 FIBRE	A	4	
730-001-00	THERMAL JOINT COMPOUND	A	AR	
730-003-00	ADHESIVE INDSTRL 3M 4799	A	AR	
730-025-00	LOCTITE 222	A	AR	
730-026-00	ADHESIVE RTV162	A	AR	
⚠ 770-007-00	FAN 80MM 24VDC-PANASONIC	B	1	
780-136-00	FOAM INSL FAN M1400 II	A	1	

⚠ Components noted with this symbol shall be replaced only by the component specified. This is required to maintain product safety.

055-253-00 Rev A Input board

Part #	Description	Value		Reference
040-136-00	DIS 18GA 1007 BLK 5 QDTRM			J10
130-037-02	RESISTOR POT 9MM HORIZ	10K C		R22 R33
130-062-02	POT 50KC 12MM DUAL WO SLV	50KC		R13 R24
140-025-00	RESISTOR CF	10	5%	R54
140-078-00	RES TF SM .1W 5% 1K6 OHM	1K6	5%	R19-20 R30-31
140-082-00	RES TF SM .1W 5% 2K4 OHM	2K4	5%	R18 R29
140-087-00	RESISTOR CF	3K9	5%	R38
140-089-00	RESISTOR CF	4K7	5%	R21 R32 R35-37 R46-47
140-095-00	RES TF SM .1W 5% 8K2 OHM	8K2	5%	R17 R28
140-108-00	RESISTOR CF	27K	5%	R45
140-115-00	RESISTOR CF	51K	5%	R41 R43-44
140-123-00	RESISTOR CF	100K	5%	R39-40
140-147-00	RESISTOR CF	1M	5%	R23 R34
145-318-00	RES MF SM .1W 1% 2K00 OHM	2K00	1%	R1-2 R7-8 R42
145-389-00	RESISTOR MF	10K0	1%	R3-4 R9-10
145-397-00	RESISTOR MF	12K1	1%	R5-6 R11-12
200-001-02	CAPACITOR MYLAR T&R	0.012		C25 C28
200-004-02	CAPACITOR MYLAR T&R	0.047	10%	C24 C27
200-015-02	CAPACITOR MYLAR T&R	0.0047		C13 C16
200-022-02	CAPACITOR MYLAR TAPE	0.47	10%	C23 C26
200-025-02	CAPACITOR MYLAR T&R	0.56		C11-12 C14-15
212-001-00	CAPACITOR CERAMIC SMT	0.01	10%	C17-20 C29-32
212-004-00	CAPACITOR CERAMIC SMT	220PF	5%	C1-3 C6-8 C21-22
212-009-00	CAPACITOR CERAMIC SMT	47PF	5%	C4-5 C9-10
220-001-02	LYT 22UF 20% 25V RAD TR	22UF	10%	C33-34 C39-40
300-003-00	DIODE SIGNAL SMD	DL4148		D1-8
320-012-00	OPAMP NJM4560M	NJM4560M		U1-4
400-041-00	XLR VERT MALE PCMNT			J2 J5
400-214-00	JACK 1/4 V PCMNT 1MM WASH			J3 J6
400-223-00	XLR PCMNT NEUTRIK-AP SER FEMALE			J1 J4
400-341-20	HDR 20P .10X2 STR LCK			J11 J16
450-253-00	PCB INPUT M-1400-S2			Z3
500-023-00	SWITCH	4P3T		SW3 SW5
500-024-00	SWITCH SLIDE VERT PC MTG	DPDT		SW1 2 SW4

Components noted with this symbol shall be replaced only by the component specified. This is required to maintain product safety.

055-254-00 Rev A Display board

Part #	Description	Value		Reference
130-070-00	POT RTY 5K LIN 9MM 21DET	5KB	20%	R2 R32
140-057-00	RESISTOR CF	220	5%	R11
140-068-00	RES TF SM .1W 5% 620 OHM	620	5%	R9 R20
140-073-00	RES TF SM .1W 5% 1K0 OHM	1K0	5%	R33 R38
140-076-00	RESISTOR CF	1K3	5%	R25 R45-48 R50-52 R54
140-081-00	RESISTOR CF	2K2	5%	R1 R31
140-083-00	RES TF SM .1W 5% 2K7 OHM	2K7	5%	R10 R16-19 R49 R53
140-087-00	RESISTOR CF	3K9	5%	R14
140-092-00	RESISTOR CF	6K2	5%	R13
140-094-00	RESISTOR CF	7K5	5%	R15
140-097-00	RESISTOR CF	10K	5%	R29 R43-44
140-106-00	RESISTOR CF	24K	5%	R8 R28
140-111-00	RESISTOR CF	36K	5%	R41-42
140-124-00	RESISTOR CF	120K	5%	R12
140-139-00	RESISTOR CF	470K	5%	R4 R7 R27 R30
145-406-00	RESISTOR MF	15K0	1%	R5 R22 R24
145-469-00	RESISTOR MF	68K1	1%	R6 R23
145-478-00	RESISTOR MF	84K5	1%	R21
145-485-00	RESISTOR MF	100K	1%	R3 R26 R35 R37 R39 40
145-547-00	RESISTOR MF	442K	1%	R34 R36
212-001-00	CAPACITOR CERAMIC SMT	0.01	10%	C4-6 C10-11 C13 C19-20 C22-23
212-010-00	CAPACITOR CERAMIC SMT	.1UF	-400	C7-9 C12 C14-16 C24-25
220-002-02	CAPACITOR LYTIC RADIAL TAPE	47UF	10%	C3 C17
220-008-02	LYT 1UF 20% 50V RAD TR	1UF	10%	C18 C21
220-027-02	CAPACITOR LYTIC RADIAL	10UF	10%	C1-2
300-003-00	DIODE SIGNAL SMD	DL4148		D13-17 D21-23 D27
⚠ 304-070-02	LED RED T1 W/.550 SPCR T/	R RED		D1 D7 D18-19 D24-26
⚠ 304-071-02	LED GRN T1 W/.550 SPCR T/	R GRN		D2-6 D8-12 D20
311-002-00	X-SISTOR PNP SMD	IMBT4403		Q1-2
320-012-00	OPAMP NJM4560M	NJM4560M		U1 U6
323-002-00	I.C. QUAD COMPARATOR SMD	LM339		U2-5 U7
400-077-00	HDR 20P .1X2 STR LCK SHRD			J1
450-254-00	PCB, DISPLAY, M1400 S2			Z10
706-033-08	STDF SWAGE NO.4 X .665			M1-6

Components noted with this symbol shall be replaced only by the component specified. This is required to maintain product safety.

055-255-xx Rev A Amplifier board

Part #	Description	Value		Reference
040-135-00	CABLE ASSY, 18AWG, GN/YW, 4"			J38
100-001-00	RESISTOR CF	10	5%	R57 R72 R75 R89
100-017-00	RESISTOR CF	47	5%	R60 R69 R78 R86 R208 R213
100-023-00	RESISTOR CF	82	5%	R58 R61 R67 R70 R76 R79 R84 R87
100-027-00	RESISTOR CF	120	5%	R113
100-030-00	RESISTOR CF	160	5%	R97-100 R122 R134-136
100-031-00	RESISTOR CF	180	5%	R106 R116 R124 R132
100-040-00	RES CF .125W 5% 430 OHM	430	5%	R28 R37 R65 R83 R187
100-042-00	RES CF .125W 5% 510 OHM	510	5%	R23 R29 R33 R36 R229
100-049-00	RES CF .125W 5% 1K OHM	1K	5%	R209 R212
100-050-00	RESISTOR CF	1K1	5%	R143
100-051-00	RES CF .125W 5% 1K2 OHM	1.2K	5%	R64 R82
100-056-00	RESISTOR CF	2K	5%	R146 R157 R168 R171 R180
100-061-00	RESISTOR CF	3K3	5%	R142 R193-194 R214-215
100-071-00	RESISTOR CF	8K2	5%	R144
100-072-00	RESISTOR CF	9.1K	5%	R158
100-073-00	RESISTOR CF	10K	5%	R26 R30 R32 R35 R114 R127 R147-148 R155 R163-164 R167 R173 R176 R184 R190 R211 R220 R222-223 R227 R230-233
100-076-00	RES CF .125W 5% 13K OHM	13K	5%	R221
100-080-00	RESISTOR CF	20K	5%	R110 R152 R160 R169-170 R235
100-082-00	RESISTOR CF	24K	5%	R156
100-083-00	RESISTOR CF	27K	5%	R181
100-084-00	RESISTOR CF	30K	5%	R63 R66 R81 R90
100-086-00	RESISTOR CF	36K	5%	R112 R145 R159 R178 R197-198 R226
100-089-00	RES CF .125W 5% 47K OHM	47K	5%	R3-4 R31 R34 R108
100-092-00	RESISTOR CF	62K	5%	R139 R199-200 R203
100-093-00	RESISTOR CF	68K	5%	R140
100-094-00	RESISTOR CF	75K	5%	R234
100-097-00	RESISTOR CF	100K	5%	R111 R151 R153 R161-162 R172 R174-175 R183 R185-186 R210
100-109-00	RESISTOR CF	1M	5%	R109
100-110-00	RESISTOR CF	360K	5%	R195-196 R228
100-111-00	RESISTOR CF	390K	5%	R141
105-277-00	RESISTOR MF	750	1%	R120 R129
105-331-00	RESISTOR MF	2K49	1%	R56 R59 R62 R68 R71 R74 R77 R80 R85 R88 R105 R107 R115 R117 R119 R123 R125 R128 R131 R133 R154 R165-166 R177
110-065-00	RES CF .25W 5% 4K7 OHM	4K7	5%	R216-219
115-427-00	RESISTOR CF	24K9	1%	R118 R121 R126 R130
121-097-00	RESISTOR MOF	10K	5%	R225
123-009-00	RESISTOR MOF	0.22	5%	R38-49 R51-54
123-033-00	RESISTOR MOF	2.2	5%	R101-104 R137-138
123 056 00	RESISTOR MOF	20	5%	R149 150
123-071-00	RESISTOR MOF	82	5%	R207
123-109-00	RESISTOR MOF	3.3K	5%	R206 R224
130-038-00	RESISTOR POT TRIM HORIZ	500-B		R24 R27
⚠ 150-009-00	RESISTOR, FUSABLE, 1/4W	2.2	5%	R1-2 R5-7 R9-12 R14-18 R20-22 R50 R92 R94
⚠ 150-025-00	RES FUS .25W 5% 10 OHM	10	5%	R204-205
⚠ 150-037-00	RESISTOR, FUSABLE, 1/4W	33	5%	R13 R25 R55 R73 R91 R93 R95-96
⚠ 150-045-00	RESISTOR, FUSABLE, 1/4W	68	5%	R8 R19
⚠ 150-066-00	RESISTOR, FUSABLE, 1/4W	510	5%	R179 R182 R188-189
⚠ 150-080-00	RESISTOR, FUSABLE, 1/4W	2K	5%	R191-192 R201-202
200-007-02	CAPACITOR MYLAR T&R	0.01		C1-2 C29-30 C66 C73

⚠ Components noted with this symbol shall be replaced only by the component specified. This is required to maintain product safety.

Part #	Description	Value	Reference
200-023-00	CAPACITOR, POLY BOX	1000pF 20%	C77 C84
200-024-00	CAPACITOR, POLY BOX	.01uF 20%	C49 C53-54
200-036-00	CAPACITOR, METALIZED POLY	.1uF 10%	C19 C26-28
200-044-02	PLY FILM 270PF 5% 630V TR	270pF 5%	C21-23 C25
210-001-02	CAPACITOR CERAMIC TAPE	0.01 10%	C8-9 C15-17 C24 C51-52 C56-63
210-010-02	CAPACITOR, CERAMIC, T/R	47pF 5%/NPO	C37 C40
210-017-02	CAPACITOR, CERAMIC, T/R	470pF 5%/Y5E	C32 C34 C36 C38-39 C41
211-003-00	CAPACITOR CERAMIC AXIAL	0.001 10%	C6 C10 C18 C20
211-009-00	CAPACITOR CERAMIC AXIAL	0.1 10%	C3-4 C48 C64 C71-72 C75 C81-82
220-002-02	CAPACITOR LYTIC RADIAL TAPE	47UF 10%	C74
220-004-02	CAPACITOR LYTIC RADIAL TAPE	470UF 10%	C42-43
220-011-02	CAPACITOR LYTIC RADIAL T&R	100UF 10%	C83
220-016-00	LYT 1000UF 20% 25V RAD	1000UF 10%	C11 C14
220-025-00	CAPACITOR LYTIC RADIAL	1,000UF 10%	C76
220-027-02	CAPACITOR LYTIC RADIAL TAPE	10UF 10%	C5 C7 C31 C33 C35 C44 C47 C50 C55 C65 C67-70
220-034-00	CAPACITOR LYTIC RADIAL	0.47UF 20%	C79
220-049-02	LYT 100UF 10V 20% RAD BIP	100uF 20%	C78 C80
300-001-00	DIODE SIGNAL	1N4148	D3-12 D16-17 D21-23 D25 D27-29 D32 D39-58 D61-69 D74-84 D87 D90 D92-93 D98-99
300-007-00	DIODE SIGNAL, 220V, LOW CAPACITANCE	1SS244	D24 D30-31 D33 D37-38 D59-60 D70-73 D85-86 D89
301-007-00	DIODE, POWER, DUAL, COMMON CATHODE	SF304 200V	D1
301-008-00	DIODE, POWER, DUAL, COMMON ANODE	SF304A 200V	D2
301-009-00	DIODE POWER	1N4004	D19-20 D26 D34-36 D95-96
301-010-00	DIODE POWER	1N5404	D13-15 D18
⚠ 301-017-00	THY MBS4992	MBS4992	Q93 Q95
⚠ 301-026-00	TRIAC 200V 40A	MAC224A4	Q83 Q88
302-003-00	DIODE ZENER	1N4745	D88 D91 D94 D97
310-002-00	TRANSISTOR PNP	2N4403	Q19 Q22 Q70 Q72-76 Q84 Q87
310-007-00	TRANSISTOR NPN	2N4401	Q20-21 Q78 Q80 Q85-86 Q94
310-023-02	TRANSISTOR NPN T&R	2SC2362K	Q43-44 Q47-48 Q53-54 Q57-58 Q61-62 Q65-66 Q77 Q79
310-028-00	TRANSISTOR PNP	2SB940A	Q89
310-029-00	TRANSISTOR NPN	2SD1264A	Q90-91
310-032-02	TRANSISTOR PNP T&R	2SA1016K	Q41-42 Q45-46 Q55-56 Q59-60 Q63-64 Q67-68
310-033-00	TRANSISTOR PNP	MJL21193	Q6-9 Q14-17
310-034-00	TRANSISTOR NPN	MJL21194	Q2-5 Q10-13
310-035-00	TRANSISTOR PNP	2SA1478	Q25-26 Q30 Q34-35 Q39 Q69 Q71 Q81-82
310-036-00	TRANSISTOR NPN	2SC3788	Q24 Q28-29 Q33 Q37-38 Q92
310-037-00	XSTR NPN MJE340 POWER	MJE340	Q50 Q52
310-038-00	XSTR PNP MJE350	MJE350	Q49 Q51
310-042-00	TRANSISTOR NPN	MJE15032	Q23 Q32
310-043-00	TRANSISTOR PNP	MJE15033	Q31 Q40
310-049-00	XSTR PNP 2SA794A	2SA794A	Q1 Q18
310-050-00	XSTR NPN 2SC1567A	2SC1567A	Q27 Q36
323-001-00	I.C. QUAD COMTR THRU HOLE	LM339	U2 U5-6
⚠ 329-012-00	OPTO-ISOLATOR,LED/CDS	VTL5C10	U3-4
⚠ 329-014-00	IC, DEG C TEMPERATURE SENSOR	LM35DZ	U1
⚠ 400-060-00	FUSE CLIP PC MT 5mm DIA		Z1-7 Z9
400-061-00	CONNECTOR HDR STR 2P .100 X 1		J41
⚠ 400-129-00	FUSE CLIP PC MT .25" DIA		Z8 Z10

⚠ Components noted with this symbol shall be replaced only by the component specified. This is required to maintain product safety.

..amplifier continued

Part #	Description	Value		Reference	
400-133-00	HEADER, 2X3, MATE-N-LOCK	11A	600V	J1	
400-143-00	CONN, HDR, 3-PIN, UN-SHROUDED, 0 .100			J20 J37	
400-166-00	CONNECTOR JACK 1/4" TRS HORIZ, PC MNT			J43 J45	(M-1400i ONLY)
400-171-00	CONN, HDR, 2-PIN, UN-SHROUDED,0 .100			J2-3	
400-173-00	CONN QUICK DISC .250 W/STABLE-LOK TABS			J4-5 J26 J31-36	
400-237-00	BANANA QUAD HORIZ PCMT			J44	
400-341-10	HDR 10P .10X2 STR LCK			J28 J39	
400-341-20	HDR 20P .10X2 STR LCK			J27	
400-353-00	SPEAKONS HORIZ 4 CKT NLM4MD-H-2-NG			J42 J46	(M-1400 ONLY)
⚠ 450-255-00	PCB, MAIN M-1400-S2			Z77	
⚠ 510-021-00	FUSE 5X20	F-10A		F2-5	
⚠ 601-006-00	INDUCTOR, AIR CORE	1uH	10%	L1-2	
660-005-00	Jumper, Uninsulated, 22AWG, 0.400"		ZERO	W1-28	

⚠ Components noted with this symbol shall be replaced only by the component specified. This is required to maintain product safety.

055-162-xx Rev A Soft Start board

Part #	Description	Value			Reference	
⚠ 055-162-01	PCB ASSY SOFT START 240V	A1			FOR 240VAC	
⚠ 055-162-02	PCB ASSY SOFT START 100V	A1			FOR 100VAC	
100-068-00	RESISTOR CF	6K2	.125W	5%	R5-8	
100-080-00	RESISTOR CF	20K	.125W	5%	R9	
123-124-00	RESISTOR MOF	13K	3W	5%	R12	
123-125-00	RESISTOR MOF	15K	3W	5%	R1-4	FOR 240VAC VERSION
123-056-00	RESISTOR MOF	20	3W	5%	R1	FOR 100VAC VERSION
123-085-00	RESISTOR MOF	330	3W	5%	R1	FOR 120VAC VERSION
NOTE: R2-R4 NOT USED IN 100VAC OR 120VAC VERSIONS)						
125-019-00	RESISTOR WW	68	15W	5%	R10-11	FOR 100VAC VERSION
125-020-00	RESISTOR WW	82	15W	5%	R10-11	FOR 120VAC VERSION
125-021-00	RESISTOR WW	330	15W	5%	R10-11	FOR 240VAC VERSION
200-036-00	CAPACITOR, METALIZED POLY	.1uF	250V	10%	C3	
220-007-00	CAPACITOR LYTIC RADIAL	100UF	100V	10%	C2	
220-040-00	CAPACITOR LYTIC RADIAL	10UF	160V	20%	C1	
⚠ 301-014-00	DIODE POWER	1N4007	1000V		D1-2 D4	
⚠ 302-001-00	DIODE ZENER	1N5261	47V		D3	
⚠ 310-036-00	TRANSISTOR NPN	2SC3788			Q1	
400-059-00	CONN QUICK DISC 250				J1-4	
⚠ 450-162-00	PCB, M-1200/M-1400 SOFT START				Z12	
⚠ 501-002-00	RELAY SPDT 20AMP 110VDC				K1	

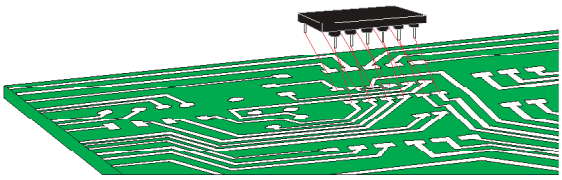

THE MACKIE FIXER • MACKIE DESIGNS SERVICE NEWS

FR series Amplifier ribbon replacement instructions (NEW! IMPROVED! July 2000)*

Models affected: FR series M1200, M1400, M1400i

M1200: All models. **M1400i:** Before Serial # DA20889 and all models with "AM" prefix.
M1400 and 230v versions: Before Serial # DB12700 and all models with "AH" prefix.
Add this as part of your normal repair procedures.
Note: This bulletin replaces all previous ribbon bulletins.

Symptom:

Ch.1 or 2 output signal intermittently fades out, or cuts out completely and/or the DC supply rail fuses blow.

Possible Cause:

The two ribbon cables from the input board may be defective

Solution:

*Replace the input ribbon cables with an improved type in all of the above models, (including any which have had the previous ribbon bulletin completed).

Safety Warning:

⚠ Caution! These instructions are for use by qualified personnel only. To avoid electric shock, do not perform any servicing unless you are qualified to do so. Refer all service to qualified personnel.

Tools Required:

Phillips screwdriver, Torx and Allen drivers, needle nose pliers, safety glasses.

Parts Required:

040-359-00	Ribbon cable, 28GA, 20 Pin, Length 4.25", PLZD	Quantity = 1
040-360-00	Ribbon cable, 28GA, 20 Pin, Length 18", PLZD	Quantity = 1
400-077-00	20 Pin Headers	Quantity = 2

Procedure:

1. Remove all cords (including the power cable and speaker outputs) from the amplifier.
2. Take off the top cover and inspect the ribbon cables. If they are not marked 040-359-00 or 040-360-00 then proceed as follows:

Remove the input board:

3. Undo the XLR screws, TRS nuts, and pull out the four pot knobs.
4. Disconnect the short ribbon cable from the amp board, and the long cable from the front panel display board. On later amplifiers, you will have to remove the front display board first.
5. Disconnect the black ground wire from the amp board.
6. Undo the four screws on the right side of the chassis. This will give enough room to pull out the input board. Catch the two metal XLR plates before they fall inside (not present on later amplifiers).

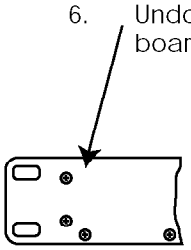

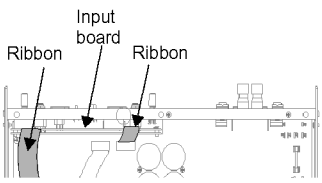

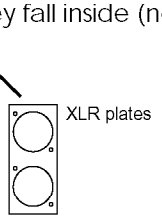

Continued....

Procedure continued.

Input board work:

If the two ribbon cables are soldered to the input board, follow steps 7 to 11. If not, then go to step 12.

7. Remove the metal shield plate and insulator sheet from the back of the input board.
8. Carefully unsolder the ribbon cable headers from J16 and J11.
   Discard part# 040 033 03, 4 inch ribbon cable.
   Discard part# 040-033-02, 18 inch ribbon cable.
9. Solder two new headers (#400-077-00) to the input board, with the cutout side pointing towards the center of the input board (i.e. downwards).
10. Replace the metal shield plate and insulator sheet onto the back of the input board.
11. Add part# 040-359-00, 4.25 inch ribbon cable to J11.
    Add part# 040-360-00, 18 inch ribbon cable to J16.
    Align each cable's color stripe with the header's pin 1.
    Make sure both ribbons are **fully inserted**, then proceed to step 15.

If the two ribbon cables are not soldered to the board, follow steps 12 to 14.

12. Discard part# 040-062-00, 4.25 inch ribbon cable.
    Discard part# 040-062-02, 18 inch ribbon cable. You may have to undo the display board screws in order to remove it from J1.
13. Add part# 040-359-00, 4.25 inch ribbon cable to J11.
    Add part# 040-360-00, 18 inch ribbon cable to J16.
    Align each cable's color stripe with the header's pin 1.
    Make sure both ribbons are **fully inserted**.
14. Refit the display board, once the long ribbon cable is securely attached to J1.

Putting the input board back in:

15. Add the two metal XLR plates (where fitted) and carefully fit the input board back in place. Put the four pot knobs back after the board is in place.
16. It can be difficult getting the knobs back on through the chassis holes, but you can make it easier by snipping off a bit of the plastic center ridge, as shown in the little knob diagram below.
17. Add and tighten all the nuts and screws, and the four chassis screws (removed in step 6).
18. Make sure that all ribbon cables are secure and that all ends are fully inserted.
19. Reconnect the black wire from the input board to the amp board.
20. Replace the top cover.
21/ Perform a complete specification and safety test before returning the unit to the customer.

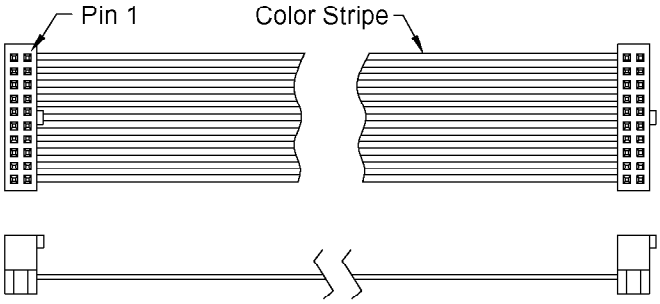

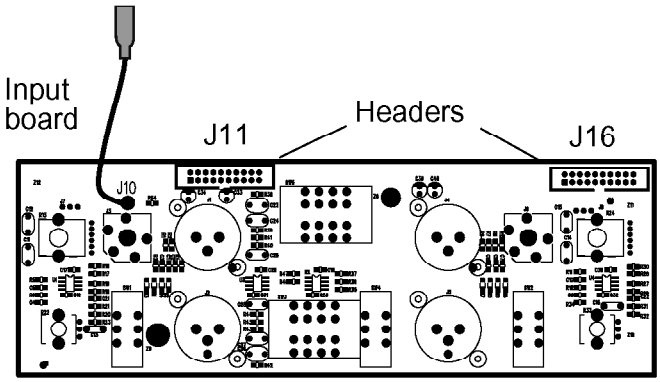

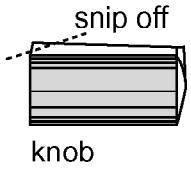

FASTEN TRANSISTOR TO HEATSINK

STEP	TASK
A	INSPECT ITEM (1) HEATSINK FOR SCRATCHES, DINGS, AND BURRS. SAND AS REQUIRED TO REMOVE SCRATCHES AND BURRS.
B	CLEAN ITEM (1) HEATSINK USING ITEM (2) CITRUS CLEANER. USE COMPRESSED AIR TO BLOW OFF ANY REMAINING DUST OR DEBRIS.
C	APPLY A THIN EVEN COAT OF ITEM (3) THERMAL JOINT COMPOUND TO ITEM (1) HEATSINK. APPLY TO AREA THAT WILL BE COVERED BY SILPAD.
D	CLEAN ITEM (4) SILPAD WITH A CLEAN CLOTH. SILPADS SHOULD BE STORED IN ORIGINAL PACKAGING TO PREVENT CONTAMINATION FROM DUST OR DEBRIS. IT IS ABSOLUTELY CRITICAL THAT THE HEATSINK AND SILPAD ARE THOROUGHLY CLEAN BEFORE PROCEEDING.
E	PLACE ITEM (4) SILPAD ON ITEM (1) HEATSINK. ENSURE HOLES IN SILPAD ALIGN WITH HOLES IN HEATSINK.
F	INSPECT ITEM (5) PCB: 1) CHECK TOP SIDE FOR LOOSE, MISSING, LIFTED AND BACKWARDS PARTS. 2) CHECK BACKSIDE FOR UNTRIMMED LEADS, MISSING SOLDER AND SOLDER BRIDGES. 3) CHECK METAL ON TRANSISTORS FOR SCRATCHES, BURRS, OR OTHER MATERIAL THAT MAY DAMAGE SILPAD.
G	INSTALL ITEM (5) MAIN PCB ONTO ITEM (1) HEATSINK.
H	PLACE ITEM (6) (1X) T-CLIP ON CENTER COMPONENTS.
I	INSTALL ALL HARDWARE ITEMS (7) (2X), & (8) (18X).

ITEM	DESCRIPTION	PART NUMBER	QTY	TORQUE IN. LBS.
(1)	HEATSINK	551-085-00	1	
(2)	3M CITRUS CLEANER	730-006-00	A/R	
(3)	THERMAL JOINT COMPOUND	730-001-00	A/R	
(4)	SILPAD	410-006-00	1	
(5)	MAIN PCB	055-255-01-01	1	
(6)	T-CLIP	550-255-00	1	
(7)	TF 4-40x5/8 TORX 1/4 WASHER	700-087-00	2	10
(8)	TF 4 40x5/8 TORX 3/8 WASHER	700-088-00	18	13

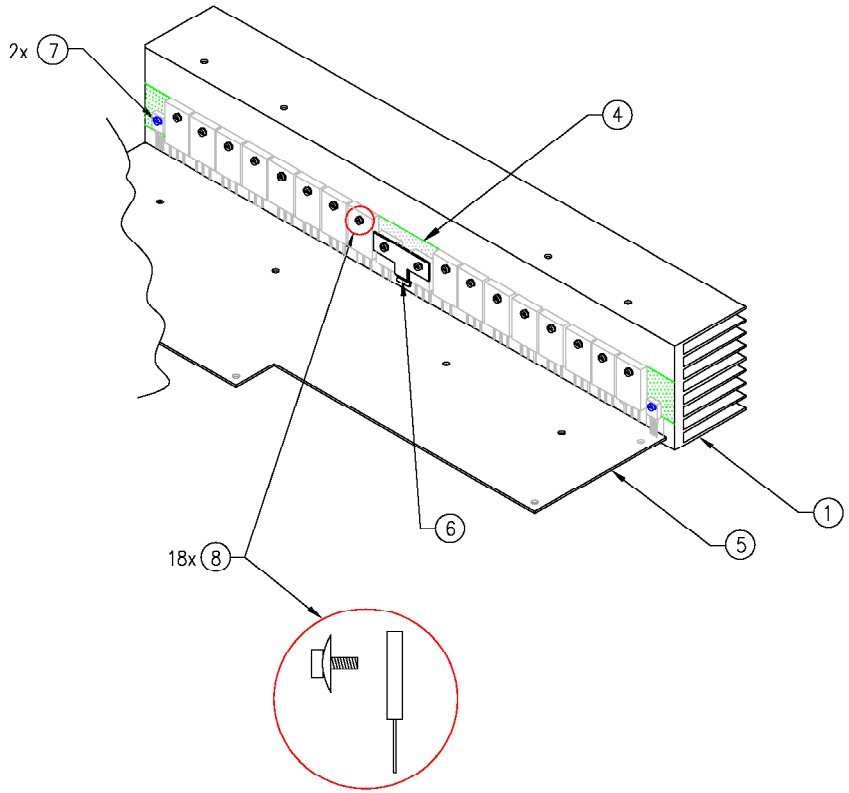

#2 INSTALL SUBSINKS

STEP	TASK
A	TIGHTEN ITEM 1 (2X) & ITEM 2 (18X) SCREWS. CAUTION: BE SURE THERE IS NO DIRT OR OTHER PARTICLES BETWEEN THE HEATSINK, SILPAD AND COMPONENTS.
B	APPLY ITEM 9 SILPAD (2x) TO BOTTOM EDGE OF ITEM 8 SUBSINK (2x). CAUTION: THERE CAN NOT BE ANY AIR BUBBLES, DIRT, OR OTHER PARTICLES TRAPPED UNDER OR IN THE SILPAD.
C	APPLY ITEM 12 THERMALCOTE AS A THIN FILM ON THE UNDERSIDE OF ITEM 8 SUBSINK (2x) AT THE HEATSINK MATING SURFACE.
D	START ITEM 11 (2X) SCREWS INTO HEATSINK.
E	INSTALL ITEM 8 SUB-SINK (2x) TO PCB, BE SURE BE SURE TO INCLUDE ITEM 10 FIBRE WASHER USING 7 IN. LBS.
F	TIGHTEN ITEM 8 SUB-SINK (2x) TO ITEM 1 HEATSINK ASSEMBLY USING ITEM 11 SCREWS (4x). USING 12 IN. LBS.

ITEM	DESCRIPTION	PART NUMBER	QTY	TORQUE IN. LBS.
1	TF 4-40x5/8 TORX 1/4	700-087-00	2	10
2	TF 4-40x5/8 TORX 3/8	700-088-00	18	13
8	SUB-SINK	550-467-00	2	
9	SIL PAD	410 003 00	A/R	
10	FIBRE WASHER	710-013-00	4	
11	SCR PHP 6-32x3/8	700-010-04	8	7 & 12
12	THERMALCOTE	730-001-00	A/R	

A

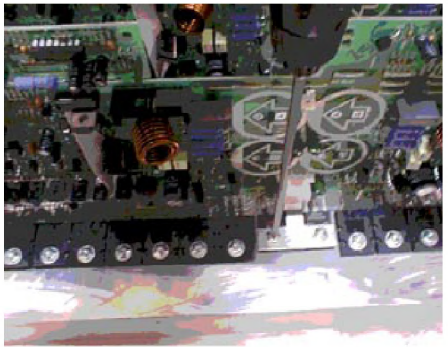

B

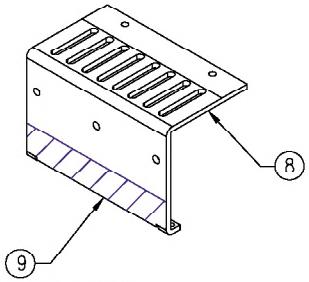

C

D

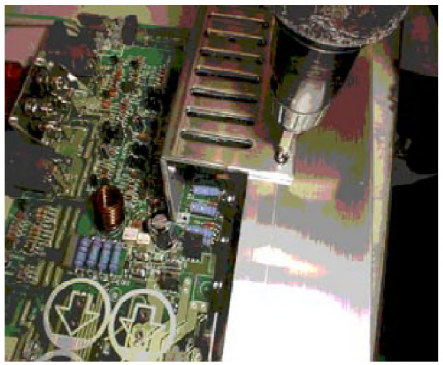

E

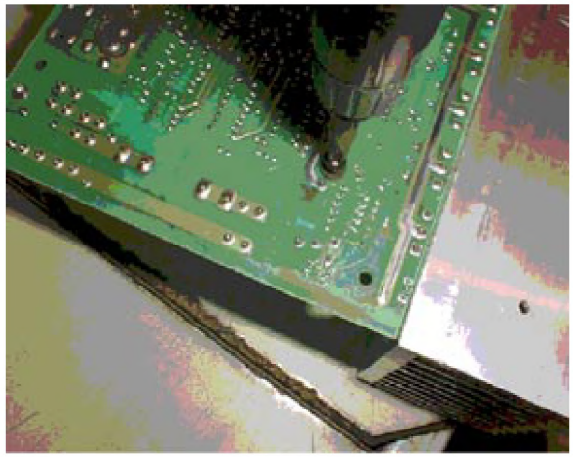

F

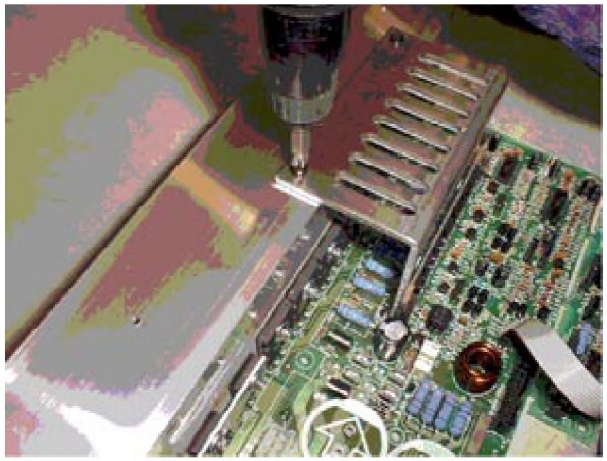

©2000 All rights reserved, Mackie Designs Inc.

STEP	TASK INSTALL CAPACITORS
A	INSTALL ITEM ① CAPACITORS (4x), USING ITEM ② BLACK GLUE (A/R), TO UNDERSIDE OF CAPS.
B	SOLDER ITEM ① CAPACITORS (4x), USING CAP FIXTURE, AND TRIM LEADS.
C	AFTER SOLDERING CAPS, APPLY ITEM ② BLACK GLUE TO MATING SURFACES BETWEEN CAPACITORS.
D	SEPARATE POWER SUPPLY BOARD FROM MAIN CIRCUIT BOARD FOR USE AT NEXT STATION.

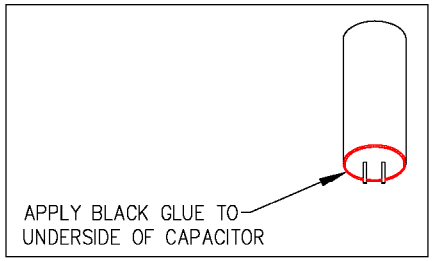

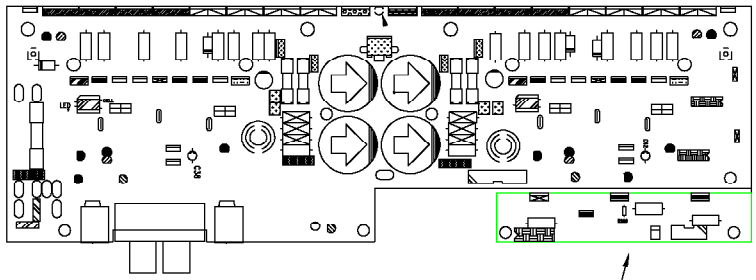

SEPARATE POWER SUPPLY PCB FROM MAIN BOARD.

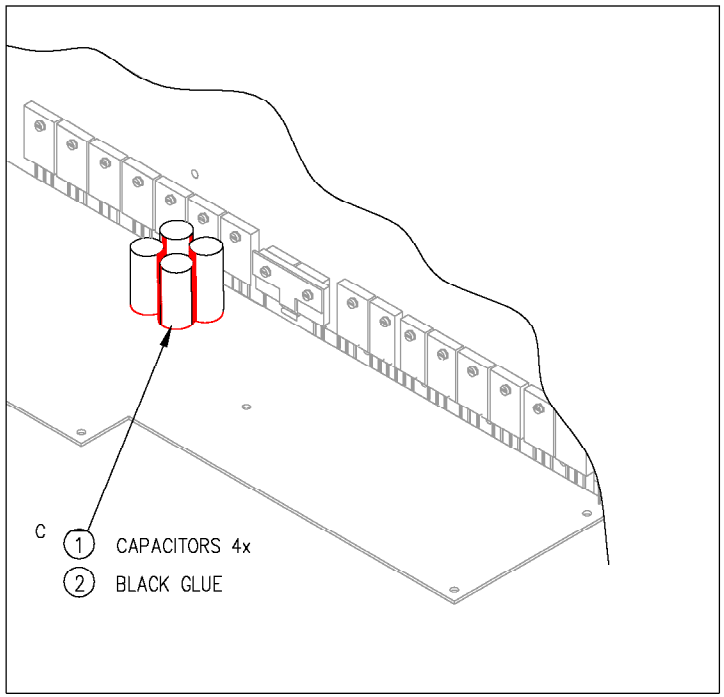

ITEM	DESCRIPTION	PART NUMBER	QTY
1	CAPACITORS 12,000uF	220–035–00	4
2	BLACK GLUE	730–003–00	A/R

INSTALL FAN AND COWLING

STEP	TASK
A	INSTALL ITEM (10) CONNECTOR (1x) ONTO FAN WIRES (SEE NOTE ON PCB AT J3 FOR PROPER WIRE LOCATIONS).
B	MOUNT ITEM (7) FAN (1X) TO ITEM (1) FAN BRACKET (1X) USING ITEM (4) SCREWS (4X), AND (8) NUT (4X). APPLY ITEM (9) LOCTITE TO SCREWS.
C	MOUNT ITEM (1) FAN BRACKET (1X) TO ITEM (5) COWLING (1X) USING ITEM (2) SCREWS (4X).
D	INSTALL ITEM (5) COWLING (1x) TO HEATSINK USING ITEM (6) SCREWS (3x).

ITEM	DESCRIPTION	PART NUMBER	QTY	TORQUE IN. LBS.
1	FAN BRACKET	550-469-00	1	
3	FOAM	780-136-00	1	
4	8-32x1/4" SCREW PHP BLK OX	700-122-00	4	10
5	COWLING	550-468-00	1	
6	SCREWS 6-32x1/4	700-010-00	3	6
7	FAN PANASONIC	770-007-00	1	
8	NUT 8-32 SMALL DIA	705-024-00	4	
9	LOCKTITE 222	730-025-00	A/R	
10	CONNECTOR 2 PIN	400-083-00	1	
11	SCREWS	700-028-02	4	

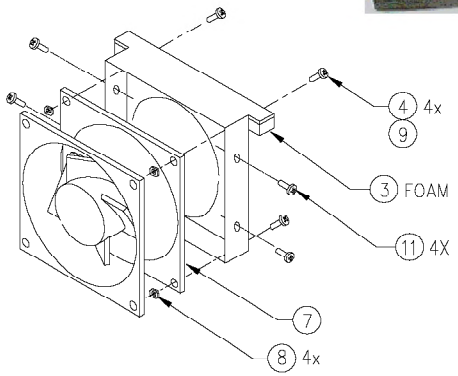

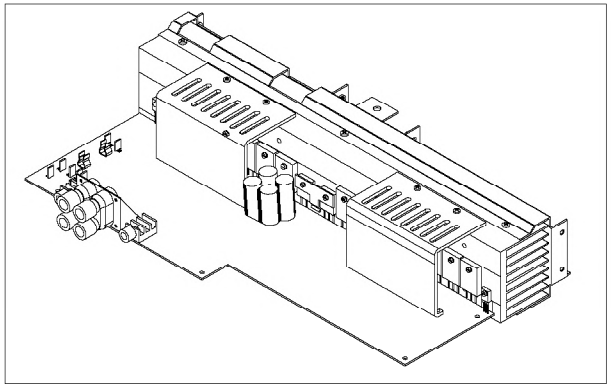

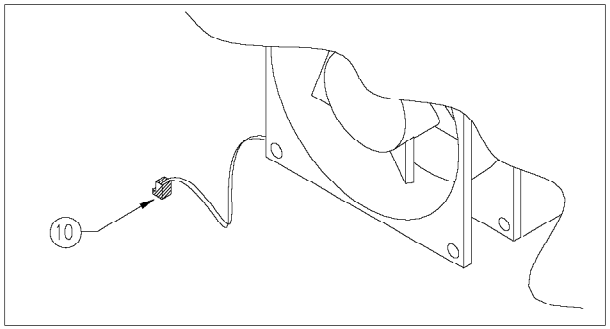

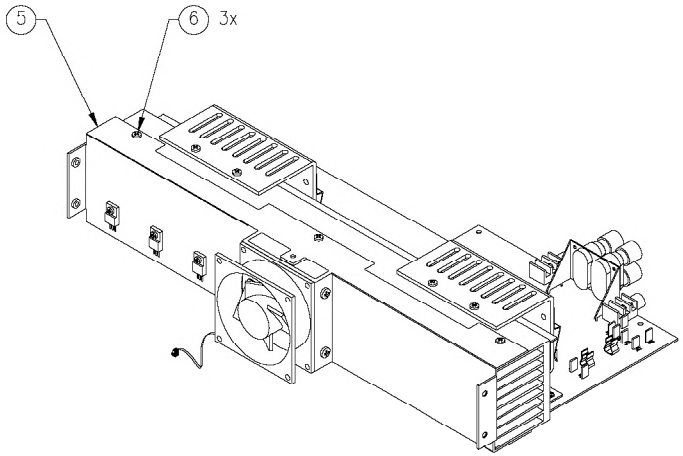

INSTALL SPRING CLIP & FAN PCB

STEP	TASK
A	INSTALL ITEM (14) SPRING CLIPS (2x) USING ITEM (15) SCREWS (6x), (START ALL SCREWS FIRST BEFORE TIGHTENING).
B	APPLY ITEM (25) THERMALCOTE (A/R) ON COMPONENTS THAT MATE TO COWLING.
C	INSTALL FAN SUPPLY PCB TO COWLING USING HARDWARE, ITEMS (26) SCREW (3x).
D	CONNECT FAN WIRE TO ITEM (29) CONNECTOR, ON PCB.
	CAREFULLY INSPECT THE ENTIRE ASSEMBLY BEFORE SENDING TO TEST.

ITEM	DESCRIPTION	PART NUMBER	QTY	TORQUE IN. LBS.
14	SPRING CLIP	550-237-00	2	
15	SCREW 6-32x5/16	700-028-01	6	10
25	THERMALCOTE	730-001-00	3	
26	4-40x5/8 TORX 1/4	700-087-00	3	7

A

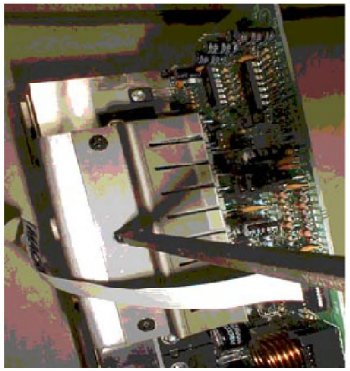

B

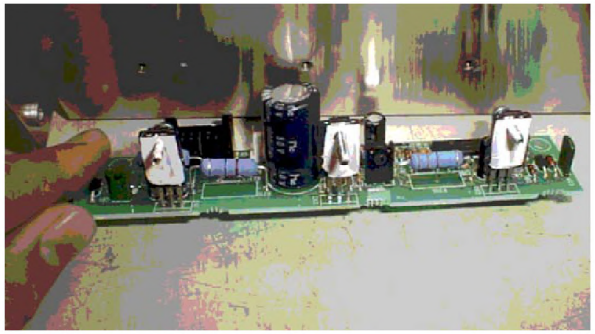

C

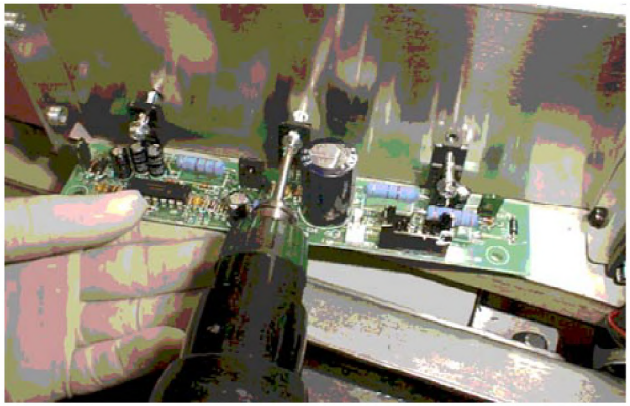

D

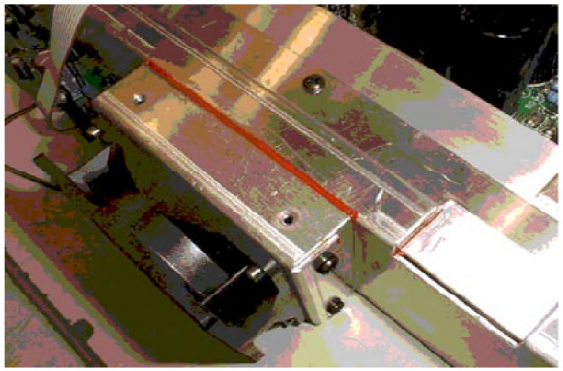

STEP	TASK
A	CLEAN WORK PALLET TO PREVENT DIRT FROM SCRATCHING CHASSIS DURING ASSEMBLY.
B	INSTALL ITEM ① INSULATIVE MYLAR (1X) ONTO ITEM ② INPUT SHIELD (1X).
C	INSTALL ITEMS ① MYLAR SHIELD AND ② INPUT SHIELD ONTO ITEM ③ INPUT PCB (1X) USING ITEM ④ SCREWS (4X).
D	INSTALL ITEM ⑤ AND ⑥ RIBBON CABLES (1X EA.) AS SHOWN.
E	APPLY ITEM ⑦ RTV 162 ADHESIVE TO RIBBON CABLE CONNECTIONS.
G	INSTALL ITEM ⑨ INPUT KNOBS (2X).
H	INSPECT CHASSIS CAREFULLY BRFORE PROCEEDING. LOOK FOR MISSING PEMS, SCRATCHES AND SILKCREEN ERRORS.
I	PLACE ITEM ③ INPUT PCB INTO ITEM ⑩ CHASSIS AND SECURE WITH ITEMS ⑪ WASHER AND ⑫ NUT (2X EA.)
J	SOFT START PCB's ARE INSTALLED IN THE 100V AND 220/240V VERSIONS ONLY
K	ATTACH ITEM ⑬ SOFT START BRACKET (1X) TO ITEM ⑳ HEATSINK ASSY USING ITEM ⑭ SCREWS (2X)
L	ATTACH APPROPRIATE SOFT START PCB ⑮ OR ⑯ (SEE TABLE J) TO BRACKET USING ITEM ⑰ SCREWS (4X)
M	PLACE ITEM ⑱ 240V LABEL ON ALL 220/240V MODELS 090-137-(01, 04, 05, 06, 07) PLACE ITEM ⑲ 100 VOLT LABEL ON JAPANESE MODELS 090-137-02 PLACE ITEM ㉑ 220 VOLT LABEL ON 090-137-03
N	NO VOLTAGE LABEL IS REQUIRED FOR 120 VOLT MODELS.

ITEM	DESCRIPTION	PART NUMBER	QTY	TORQUE IN LBS
1	MYLAR SHIELD	780-042-00	1	
2	INPUT SHIELD	550-247-00	1	
3	INPUT PCB	055-253-00-01	1	
4	SCREW SEMS 6-32x5/16	700-028-01	4	10
5	4.25" RIBBON CABLE	040-062-00	1	
6	18" RIBBON CABLE	040-062-02	1	
7	RTV 162	730-026-00	A/R	
9	GREY/BLACK KNOBS	760-048-04	4	
10	M1400 CHASSIS	550-470-00	1	
11	CHROME FLAT WASHER	710-002-00	2	
12	CHROME NUT	705-003-00	2	17
13	SOFT START BRACKET	550-294-00	1	
14	SCREW SKT 6-32x3/8	700-083-01	2	10
15	100V SOFT START (SEE ABOVE)	055-162-02	1	
16	240V SOFT START (SEE ABOVE)	055-162-01	1	
17	SCREW SEMS 6-32x5/16	700-028-01	4	10
18	240V LABEL (SEE ABOVE)	840-079-00	1	
19	100V LABEL (SEE ABOVE)	840-073-00	1	
20	MAIN HEATSINK ASSEMBLY	080-149-00	1	
21	220V LABEL (SEE ABOVE)	840-059-00	1	

B

C

D

E

F

G

I

J

SOFT START GUIDE		
ASSEMBLY	ITEM	SOFT START
090-137-02	⑮	100 VOLT SOFT START
090-137-01 -03, -04, -05, -06, -07	⑯	240 VOLT SOFT START

K

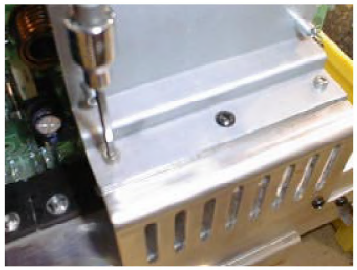

L

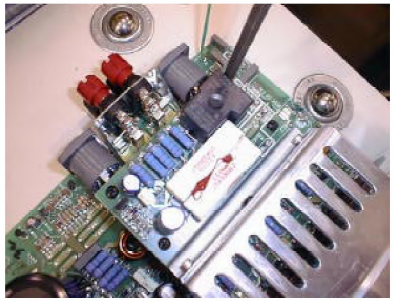

M

STEP	TASK
A	CONNECT INPUT RIBBON CABLE TO MAIN PCB.
B	CONNECT BLACK WIRE FROM INPUT PCB TO MAIN PCB.
C	START ITEM (1) SCREWS (4X) INTO BANNANA JACK AND THEN TIGHTEN.
D	START ITEM (8) SCREWS (4X) INTO SPEAKONS AND THEN TIGHTEN.
E	START ITEM (2) SCREWS (8X) INTO XLR JACKS AND THEN TIGHTEN.
F/G	APPLY ITEM (3) LOCKTITE TO ITEM (4) SCREWS (2X) AND INSTALL INTO LOCATIONS NEAR LARGE FILTER CAPACITORS.
H	INSTALL REMAININC SCREWS, ITEM (7) (5X) HOLDINC PCB TO CHASSIS.
I	SOFT START MODELS ONLY: INSTALL ITEMS (5) BLUE WIRE (1X) AND (6) BROWN WIRE (1X) AS SHOWN.

ITEM	DESCRIPTION	PART NUMBER	QTY	TORQUE IN. LBS.
1	M3 SCREW	700-085-03	4	10
2	#5 SCREW	701-016-00	8	10
3	LOCTITE BLUE 242	730-016-00	A/R	
4	SCREW 6-32 FILLSTER	700-050-04	2	10
5	BLUE WIRE (SEE ABOVE)	040-152-00	1	
6	BROWN WIRE (SEE ABOVE)	040-153-00	1	
7	SCR #6-32x5/16 SEMS	700-028-01	5	10
8	#4X3/8 PHP2 TYP B BLK	701-022-02	4	5

A

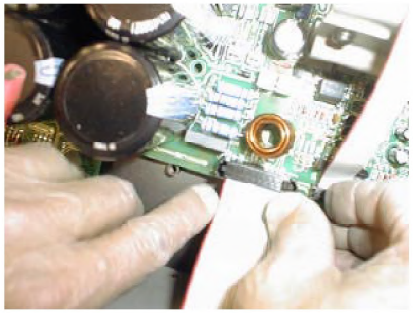

B

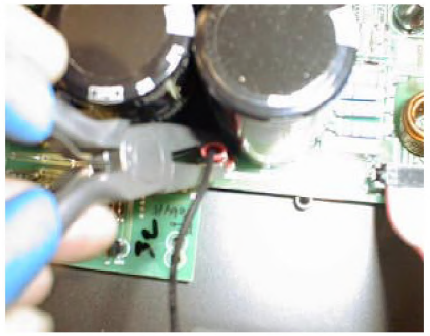

C

D

E

F

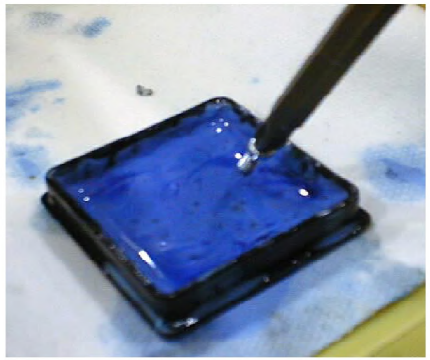

G

H

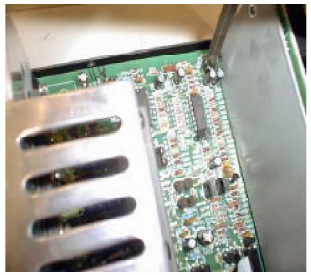

I

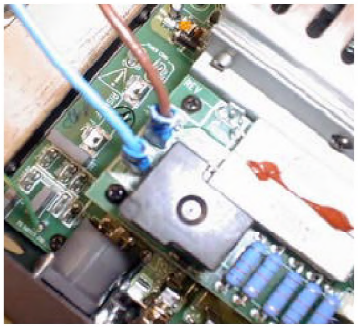

STEP	TASK
A	PLUG IN RIBBON CABLE FROM INPUT PCB INTO ITEM (1) DISPLAY PCB (1X).
B	PUT ITEM (2) ADHESIVE ON BOTH ENDS OF HEADER/CABLE CONNECTION TO SECURE PART.
C	PLACE ITEM (2) ADHESIVE ON FAN SUPPLY PCB CONNECTION.
D	PLACE ITEM (2) ADHESIVE ON MAIB PCB HEADER/CABLE CONNECTION.
E	PLACE DISPLAY PCB INTO CHASSIS AND SECURE USING ITEM (3) SCREWS (6X).
F	PUSH ITEM (4) VOLUME KNOBS (2X) INTO VOLUME POTS.
G	SECURE ITEM (5) RIGHT SIDE (1X) USING ITEM (6) SCREWS (8X).

ITEM	DESCRIPTION	PART NUMBER	QTY	TORQUE IN LBS
1	DISPLAY PCB	055-254-00	1	
2	ADHESIVE RTV 162	730-026-00	A/R	
3	SCREW 4-40X1/4 BTN	700-011-00	6	
4	VOLUME KNOB	760-061-00	2	
5	RIGHT SIDE	550-566-00	1	
6	SCREW 6-32 x 5/16	700-028-01	10	10

A

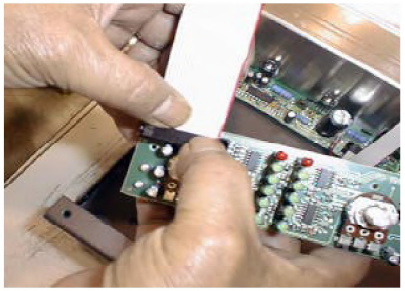

B

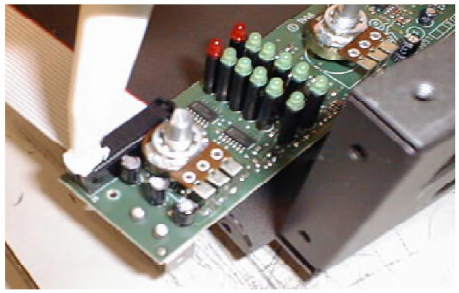

C

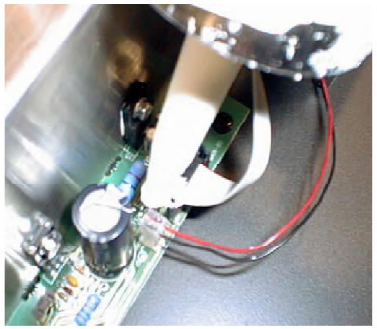

D

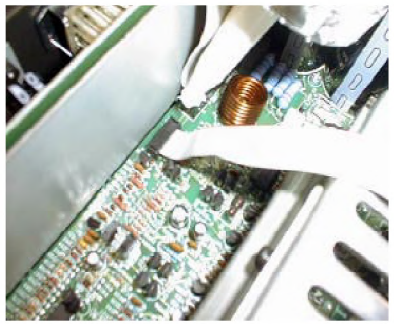

E

F

G

STEP	TASK
A	INSTALL ITEM (1) SCREWS (3X) SECURING HEATSINK.
B	INSTALL ITEM (2) LEFT SIDE USING ITEM (3) SCREWS (8X). START ALL SCREWS FIRST, BEFORE FULLY TIGHTENING.
C	PLACE ITEM (7) STRAIN RELIEF ONTO APPROPRIATE LINE CORD AND INSERT INTO CHASSIS.
	USE TABLE BELOW TO DETERMINE PROPER LINE CORD.

LINE CORD TABLE

MODEL	CORD
090-137-00	640-006-00 STANDARD 120 VOLT
090-137-01 090-137-03	640-007-01 STANDARD EUROPEAN
090-137-02	640-007-02 JAPANESE
090 137 04	640 007 03 UK/ENGLAND
090-137-05	640-007-04 ITALY
090-137-06	640-007-05 AUSTRALIA
090-137-07	640-007-06 SWISS

ITEM	DESCRIPTION	PART NUMBER	QTY	TORQUE IN LBS
1	TF 6-32x3/8 SCREW	700-086-00	3	15
2	LEFT SIDE	550-568-00	1	
3	SCREW SEMS 6-32x5/16	700-028-01	10	10
4	STRAIN RELIEF	740-004-00	1	

A

B

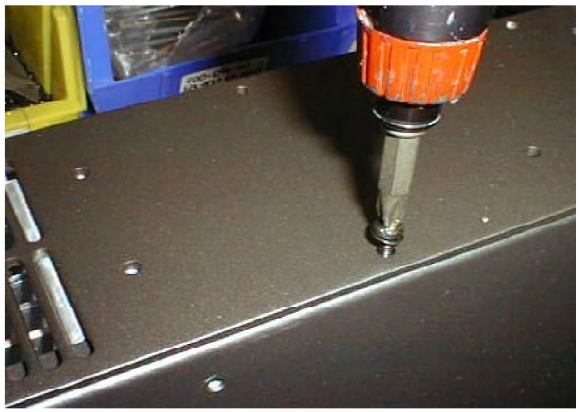

C

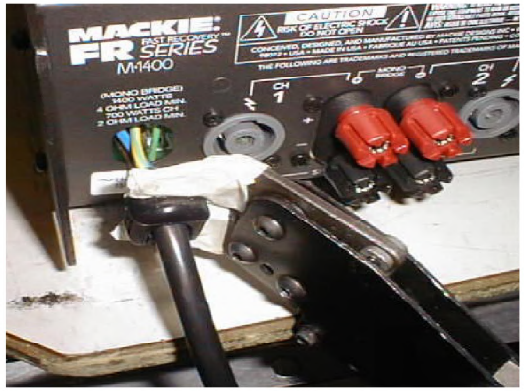

STEP	TASK
A	INSTALL ITEM (1) WIRE HARNESS (1X) ONTO ITEM (2) SWITCH (1X). NOTE: GENTLY BEND ONE OF THE CONTACT TABS THAT THE BROWN WIRE PLUGS INTO. THIS WILL ALLOW BOTH WIRES TO BE PLUGGED ON AS SHOWN.
B	INSTALL ITEM (2) SWITCH INTO CHASSIS.
C	INSTALL ITEM (7) TRANSFORMER AND ALL HARDWARE SHOWN IN DIAGRAM IN CHASSIS.
D	ITEM (4) 3" BOLT IS USED ON 230 VOLT VERSIONS ONLY [090-137-(01, 03, 04, 05, 06, 07)]. ITEM (3) 2 3/4" BOLT IS USED ON 100 VOLT AND 120 VOLT MODELS [090-137-(00 AND 02)].
E	USE TRANSFORMER TABLE TO DETERMINE PROPER TRANSFORMER
F	BE SURE PRIMARY WIRES (BLACK INSULATED WIRES) EXIT THE TRANSFORMER PERPENDICULAR TO THE RIGHT SIDE. TIGHTEN TRANSFORMER.
G	APPLY ITEM (12) LOCTITE (A/R) TO TRANSFORMER NUT AND BOLT THREADS.

ITEM	DESCRIPTION	PART NUMBER	QTY	TORQUE IN LBS
1	SWITCH HARNESS	080-035-00	1	
2	SWITCH	500-022-00	1	
3	5/16 x 2 3/4 BOLT	700-106-00	1	
4	5/16 x 3 BOLT	700-059-00	1	
5	5/16 WASHER	710-024-00	1	
6	RIBBER DISC	780-111-00	1	
7	TRANSFORMER	USE TABLE "E"	1	
8	RUBBER DISC	780-111-00	1	
9	METAL DISC	550-249-00	1	
10	5/16 WASHER	710-024-00	1	
11	5/16 STOVER NUT	705-019-00	1	145
12	LOCTITE BLUE 242	730-016-00	A/R	

A

B

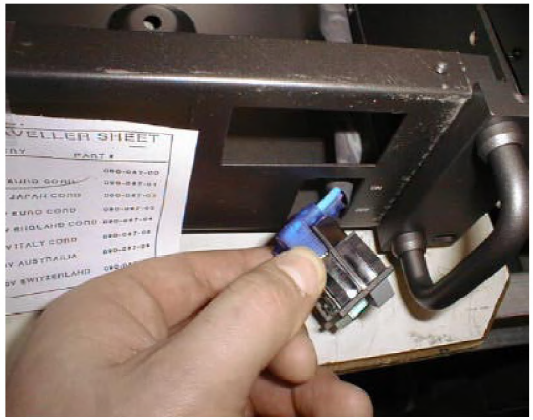

C

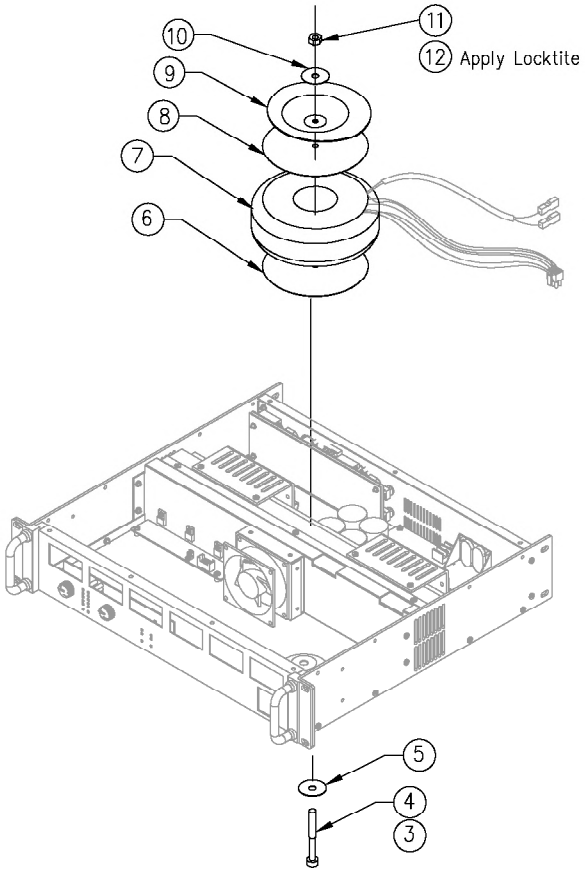

D

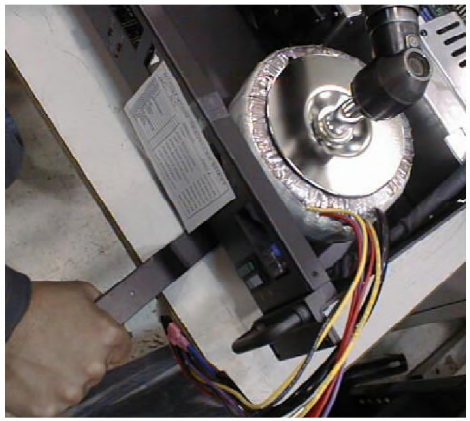

E

TRANSFORMER TABLE	
MODEL	TRANSFORMER
090-137-00	600-016-00 120 VOLT
090-137-02	600-016-02 100 VOLT
090-137-01 (-03, -04, -05, -06, -07)	600-016-01 230 VOLT

STEP	TASK
A	CAUTION: BEFORE INSTALLING FUSE, BE ABSOLUTELY SURE YOU ARE USING THE PROPER FUSE FOR THE MODEL YOU ARE ASSEMBLYING. DO NOT TRUST PART NUMBERS ON BINS. PHYSICALLY LOOK AT FUSE AND VERIFY VALUE. BE SURE FUSE IS HELD TIGHT WITH FUSE CLIPS.

MODEL	FUSE
090-067-00 (120V) 090-067-02 (100V)	510-017-00/20 AMP SLO BLO
090-097-01, 03, 04 05, 06, 07 (240V)	510-023-00/8 AMP SLO BLO

B	CONNECT LINE CORD WIRES AS SHOWN.
C	CONNECT LINE CORD GROUND WIRE TO STUD USING ITEM (1) KEPNUT (1X). TIGHTEN BEFORE PROCEEDING.
D	CONNECT PCB GROUND WIRE TO STUD USING ITEM (1) KEPNUT (1X).
E	SOFT START MODELS ONLY: PLUG BLUE AND BROWN WIRES FROM SOFT START TO MAIN PCB LABELED J34: BLUE, J: 35 BROWN.
F	PLUG IN SWITCH WIRES AS LABELED ON PCB J31: BLUE, J32: VIO, J33: BRN, J36: BRN.
G	SOFT START MODELS: PLUG PRIMARY WINDINGS FROM TRANSFORMER INTO SOFT START AS SHOWN. OTHER MODELS: PLUG DIRECTLY INTO MAIN PCB J34: BLUE, J: 35 BROWN.
H	INSTALL ITEM (3) BLACK TYWRAPS (2X) AS SHOWN ON TRANSFORMER/ SWITCH WIRES. INSTALL ITEM (1) WHITE TYWRAPS (2X) ON TRANSFORMER SECONDARY WIRES: ONE ON EACH SIDE OF THE HEATSINK.

ITEM	DESCRIPTION	P/N	QTY
1	#6 KEPNUT	705-001-00	2
2	8" BLACK TYWRAP	740-003-00	2
3	WHITE TYWRAP	740-001-00	2

A

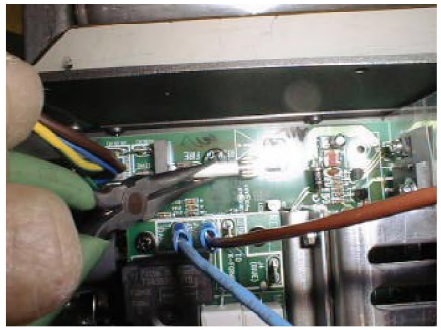

B

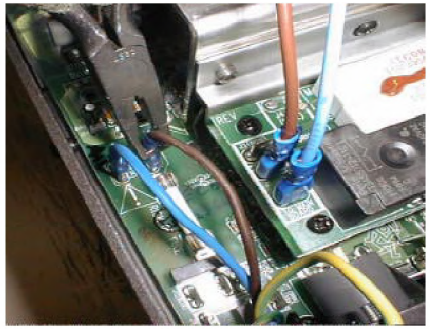

C

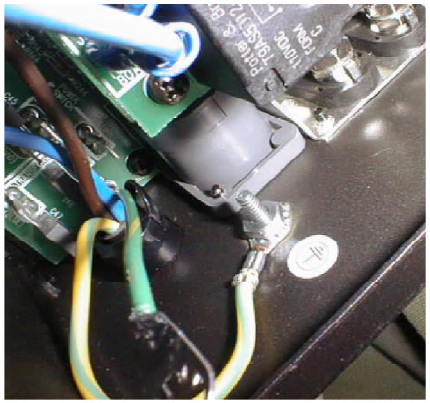

D

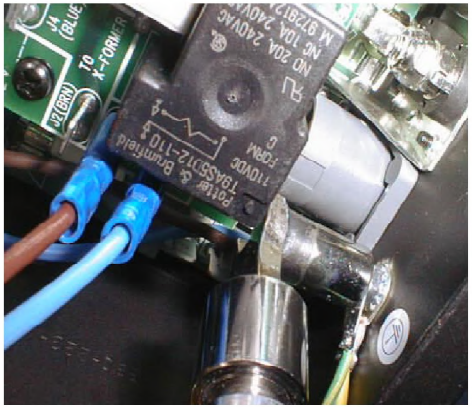

E

F

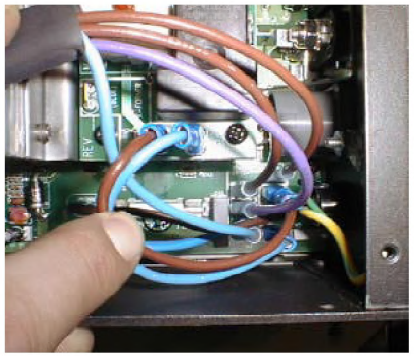

G

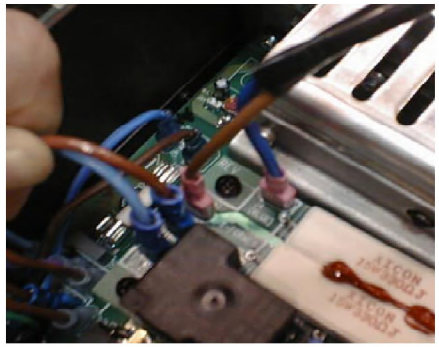

H

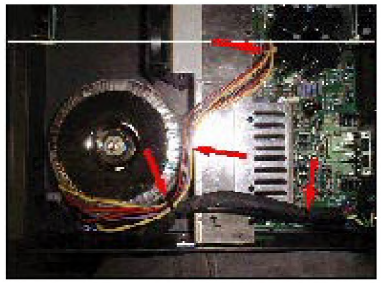

©2000 All rights reserved, Mackie Designs Inc.

STEP	TASK
A	INSTALL ITEM (2) BEZEL (1X) AND ITEM (3) TOP COVER (1X). START ITEM (4) SCREWS (8X) INTO SIDES. INSTALL ITEM (1) TOP SCREWS (7X).
B	TIGHTEN SCREWS ONLY AFTER ALL SCREWS HAVE BEEN STARTED.

A

B

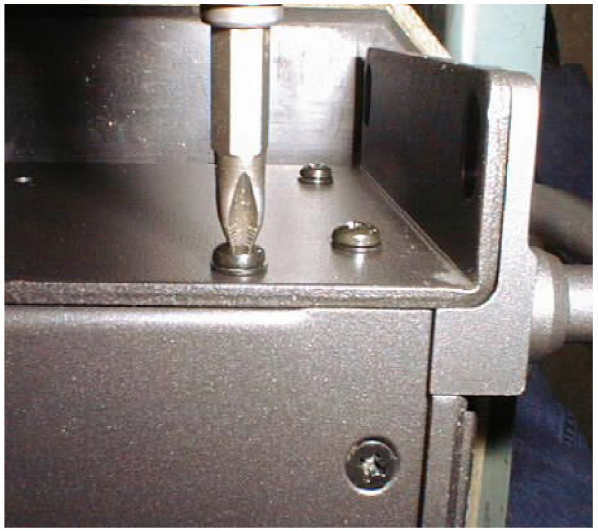

ITEM	DESCRIPTION	PART NUMBER	QTY	TORQUE IN LBS
1	MCH SCREW #6 FLAT	700-041-04	7	7
2	M1400 FRONT BEZEL	551-029-10	1	
3	TOP COVER	550-564-00	1	
4	6 32 x 5/16 SEMS SCREW	700 028 01	8	7

DWG NO	SHT	REV
990-162-00	1	A

ECO#	REV:	DESCRIPTION	REV. BY:	APP. BY:	DATE

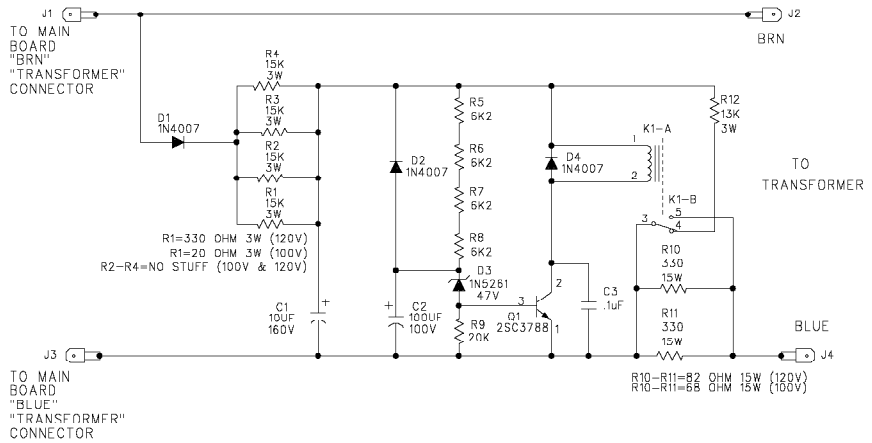

NOTE: SCHEMATIC IS SHOWN WITH 240VAC VALUES

- ☐ **NO STUFF R2-R4 FOR 100VAC OR 120VAC VERSIONS** XXX
- ☐ **REPLACES R10-R11 FOR 120VAC VERSION** 82 15W
- ☐ **REPLACES R1 FOR 120VAC VERSION** 330 3W
- ☐ **REPLACES R10-R11 FOR 100VAC VERSION** 68 15W
- ☐ **REPLACES R1 FOR 100VAC VERSION** 20 3W
- ☐ PCB, M-1200/M-1400 SOFT START

Solder side

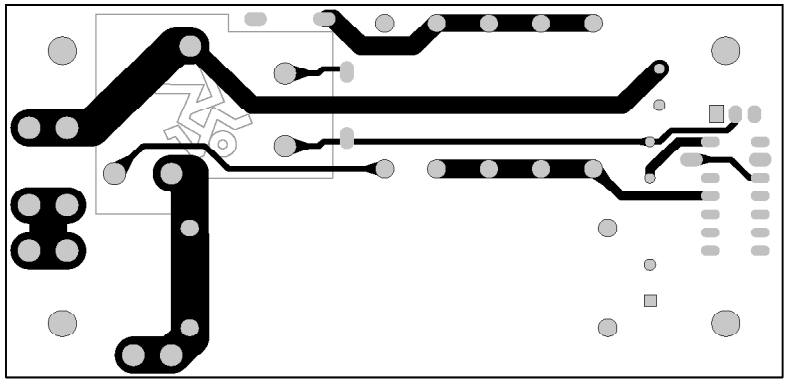

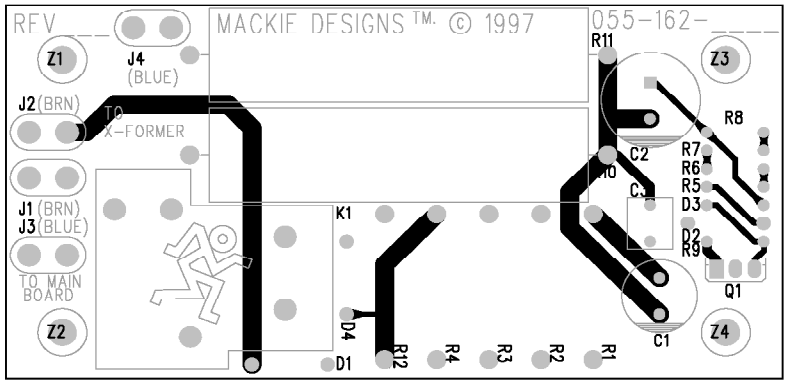

Component side

UNLESS OTHERWISE SPECIFIED DIMENSIONS ARE IN INCHES TOLERANCES ARE: FRACTIONS: ±NA DECIMALS: .XX ±.01 .XXX ±.005 ANGLES: ±NA	APPROVALS	DATE
	DRAWN: Chuck J	4-15-97
	CHECKED:	
	NP ENG: Cameron Jones	4-25-97
MATERIAL: SEE NOTES	MATERIAL:	
	MFG:	
FINISH: SEE NOTES	MFG ENG:	
DO NOT SCALE DRAWING	ISSUED:	

MACKIE.
Mackie Designs Inc. Woodinville, Wa.

SCHEMATIC, M1400 SOFT START

SIZE	SCALE:	DWG. NO.	REV.
D	NONE	990-162-00	A

DWG FILE: SHEET 1 OF 1

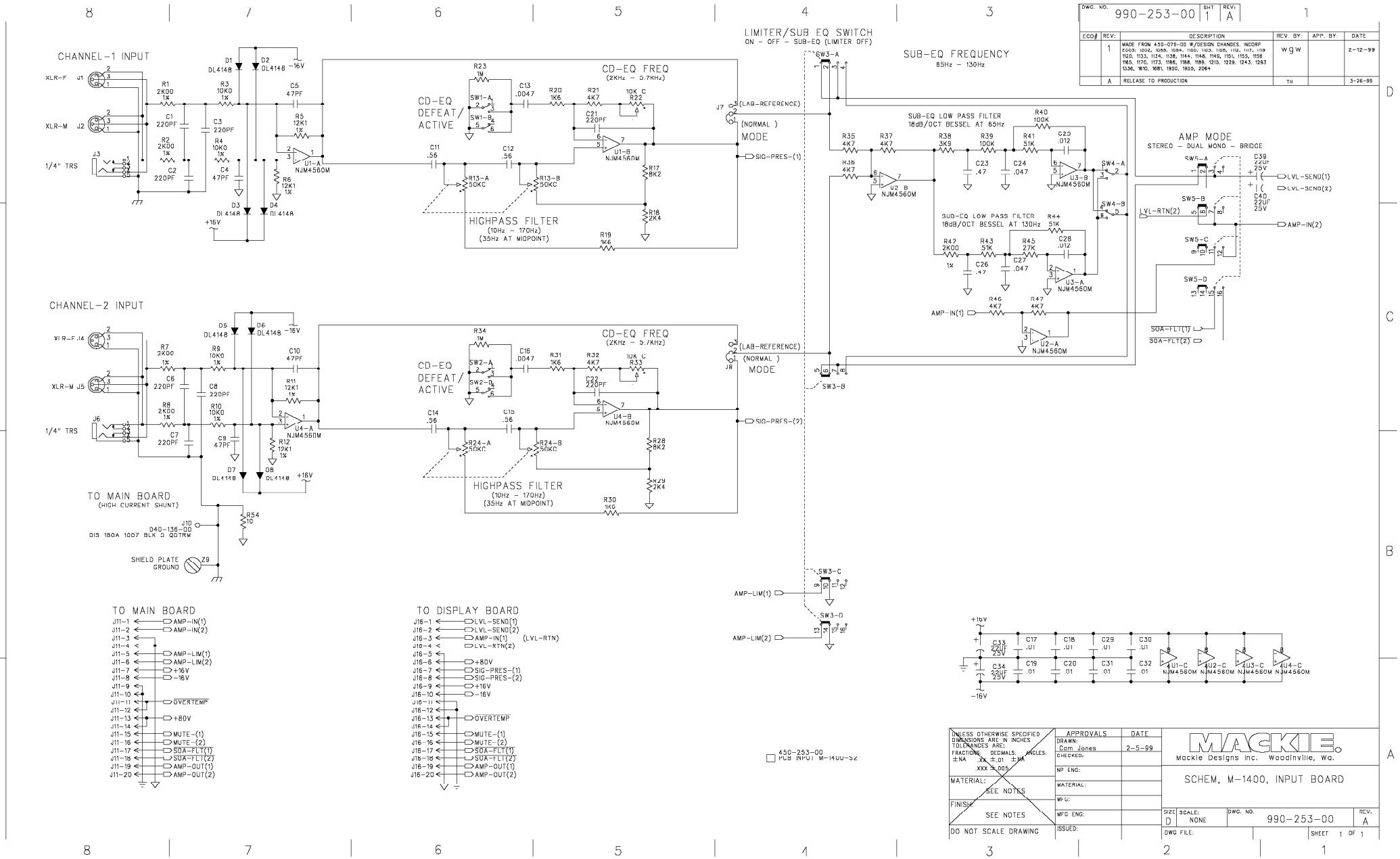
DWG. NO. 990-253-00 SHT 1 REV: A
ECO# REV: DESCRIPTION REV. BY: APP. BY: DATE
1 MADE FROM 450-078-00 W/DESIGN CHANGES. INCORP ECO3: 1002, 1089, 1094, 1100, 1103, 1105, 1112, 1117, 1119 1120, 1133, 1134, 1138, 1144, 1148, 1149, 1151, 1155, 1158 1165, 1170, 1173, 1186, 1188, 1198, 1215, 1229, 1243, 1293 1336, 1610, 1681, 1930, 1955, 2064 WGW 2-12-99
A RELEASE TO PRODUCTION TH 3-26-99
CHANNEL-1 INPUT
CHANNEL-2 INPUT
XLR-F J1
XLR-M J2
1/4" TRS J3
XLR-F J4
XLR-M J5
1/4" TRS J6
CD-EQ FREQ
(2KHz - 5.7KHz)
CD-EQ DEFEAT/ ACTIVE
HIGHPASS FILTER
(10Hz - 170Hz)
(35Hz AT MIDPOINT)
LIMITER/SUB EQ SWITCH
ON - OFF - SUB-EQ (LIMITER OFF)
(LAB-REFERENCE)
(NORMAL)
MODE
SIG-PRES-(1)
SIG-PRES-(2)
SUB-EQ FREQUENCY
85Hz - 130Hz
SUB-EQ LOW PASS FILTER
18dB/OCT BESSEL AT 85Hz
SUB-EQ LOW PASS FILTER
18dB/OCT BESSEL AT 130Hz
AMP MODE
STEREO - DUAL MONO - BRIDGE
LVL-SEND(1)
LVL-SEND(2)
LVL-RTN(2)
AMP-IN(2)
AMP-IN(1)
SOA-FLT(1)
SOA-FLT(2)
AMP-LIM(1)
AMP-LIM(2)
TO MAIN BOARD
(HIGH CURRENT SHUNT)
J10
D40-136-00
DIS 18GA 1007 BLK 9 QDTRM
SHIELD PLATE GROUND
Z9
TO MAIN BOARD
J11-1 AMP-IN(1)
J11-2 AMP-IN(2)
J11-5 AMP-LIM(1)
J11-6 AMP-LIM(2)
J11-7 +16V
J11-8 -16V
J11-11 OVERTEMP
J11-13 +80V
J11-15 MUTE-(1)
J11-16 MUTE-(2)
J11-17 SOA-FLT(1)
J11-18 SOA-FLT(2)
J11-19 AMP-OUT(1)
J11-20 AMP-OUT(2)
TO DISPLAY BOARD
J16-1 LVL-SEND(1)
J16-2 LVL-SEND(2)
J16-3 AMP-IN(1) (LVL-RTN)
J16-4 LVL-RTN(2)
J16-6 +80V
J16-7 SIG-PRES-(1)
J16-8 SIG-PRES-(2)
J16-9 +16V
J16-10 -16V
J16-13 OVERTEMP
J16-15 MUTE-(1)
J16-16 MUTE-(2)
J16-17 SOA-FLT(1)
J16-18 SOA-FLT(2)
J16-19 AMP-OUT(1)
J16-20 AMP-OUT(2)
450-253-00
PCB INPUT M-1400-S2
UNLESS OTHERWISE SPECIFIED DIMENSIONS ARE IN INCHES
TOLERANCES ARE:
FRACTIONS: ±NA DECIMALS: .XX ±.01 .XXX ±.005 ANGLES: ±NA
MATERIAL: SEE NOTES
FINISH: SEE NOTES
DO NOT SCALE DRAWING
APPROVALS DATE
DRAWN: Cam Jones 2-5-99
CHECKED:
NP ENG:
MATERIAL:
MFG:
MFG ENG:
ISSUED:
MACKIE
Mackie Designs Inc. Woodinville, Wa.
SCHEM, M-1400, INPUT BOARD
SIZE D SCALE: NONE DWG. NO. 990-253-00 REV. A
DWG FILE:
SHEET 1 OF 1

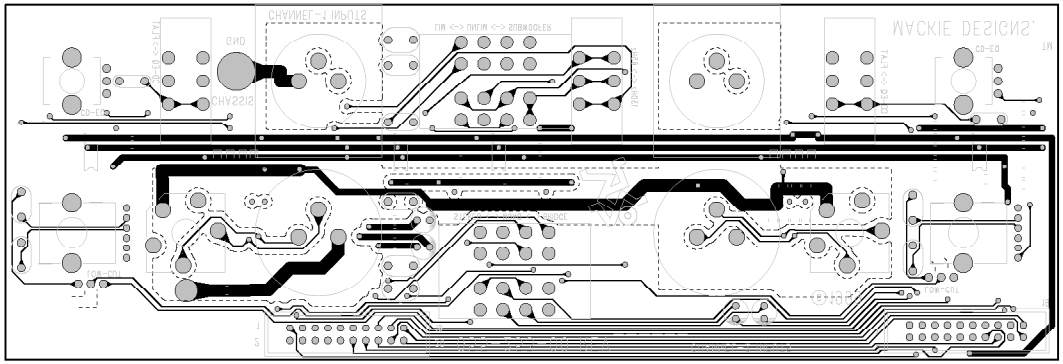

Solder side
traces and pads

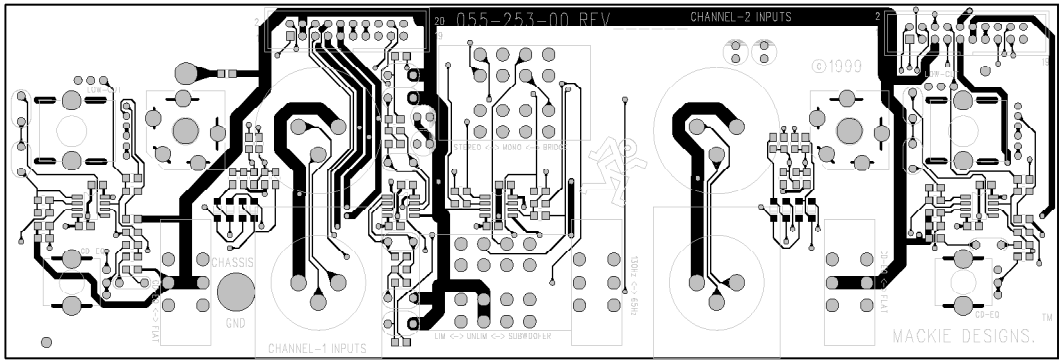

Component side
traces and pads

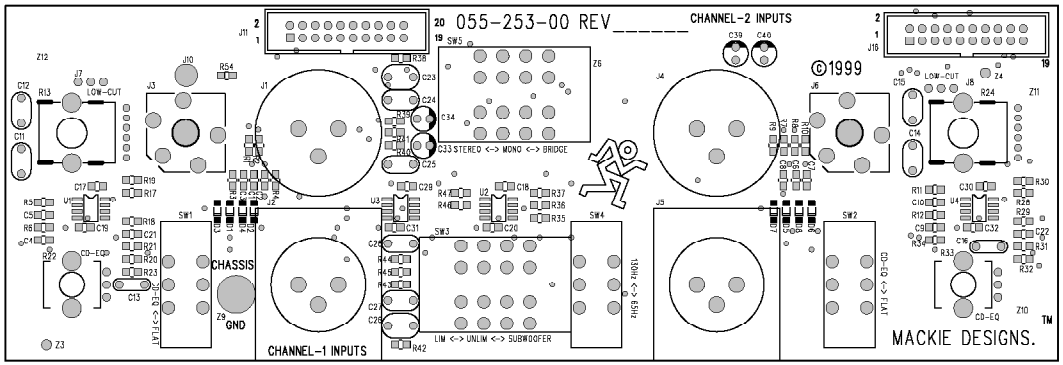

Component side

DWG. NO.	SHT	REV:
990-254-00	1	A

ECO#	REV:	DESCRIPTION	REV. BY:	APP. BY:	DATE
	1	MADE FROM 990-080 W/DESIGN CHANGES. INCORP ECOS: 1116, 1118, 1121, 1137, 1327, 1359 AND 2100.	TH		2-10-99
	A	RELEASE TO PRODUCTION	TH		3-26-99

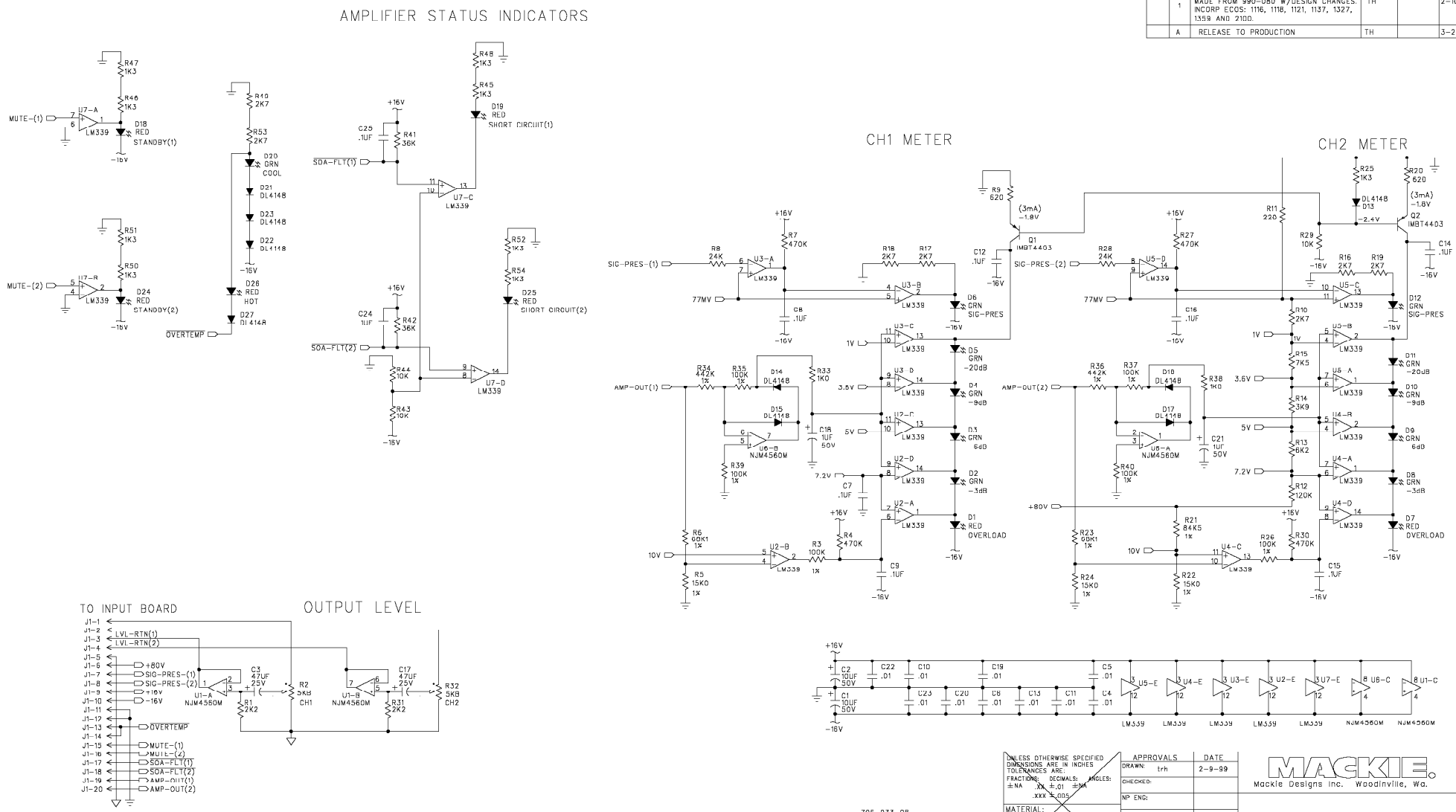

UNLESS OTHERWISE SPECIFIED DIMENSIONS ARE IN INCHES TOLERANCES ARE: FRACTIONS: ±NA DECIMALS: .XX ±.01 .XXX ±.005 ANGLES: ±NA	APPROVALS	DATE
	DRAWN: trh	2-9-99
	CHECKED:	
	NP ENG:	
MATERIAL: SEE NOTES	MATERIAL:	
FINISH: SEE NOTES	MFG:	
	MFG ENG:	
DO NOT SCALE DRAWING	ISSUED:	

☐ 706 033 08 STDF SWAGE NO.4 X .665

☐ 450-254-00 PCB, DISPLAY, M1400 S2

MACKIE.
Mackie Designs Inc. Woodinville, Wa.

SCHEMATIC, DISPLAY, M1400 S2

SIZE	SCALE:	DWG. NO.	REV.
D	NONE	990-254-00	A

DWG FILE: SHEET 1 OF 1

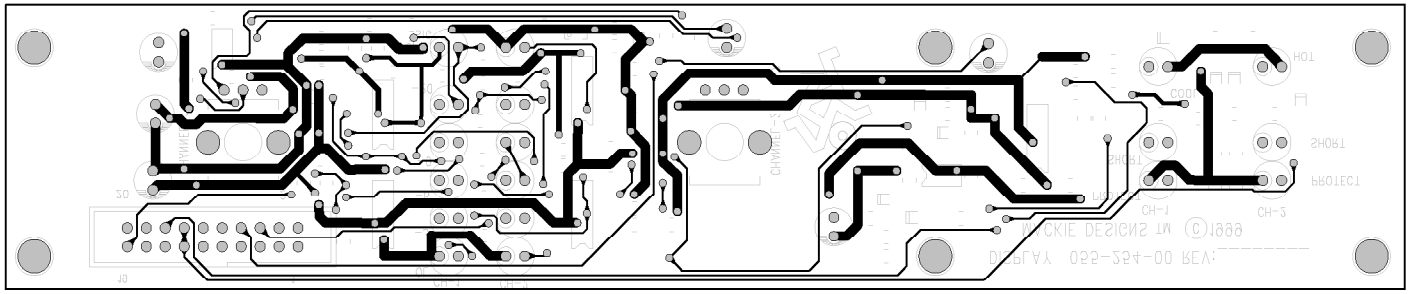

Solder side
traces and pads

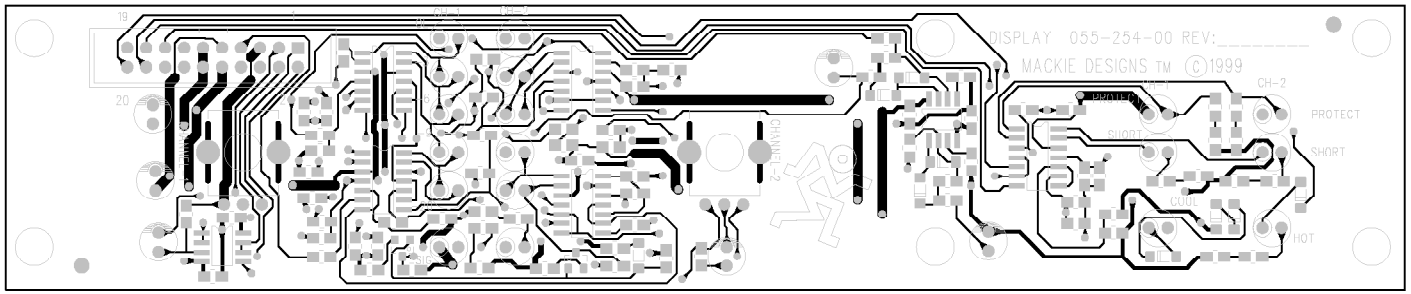

Component side
traces and pads

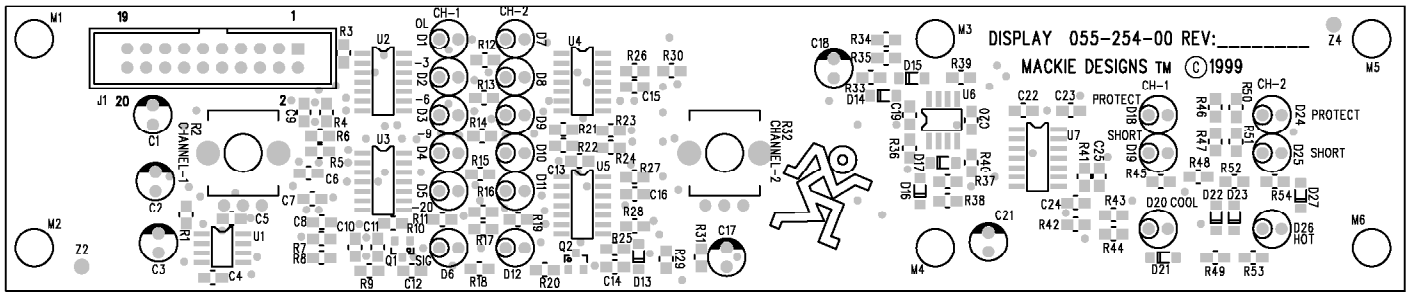

Component side

DWG. NO.	990-255-00	SHT 1	REV: A

REV:	ECO#	DESCRIPTION	REV. BY:	APP. BY:	DATE
	1	MADE FROM 990-051-00 W/ DESIGNS CHANGES. INCORP ECO3: 1092,1096, 1142, 1170, 1203, 104, 1338, 1400, 1433 218, 2134	WCW		2 12 99
	A	RELEASE TO PRODUCTION	TH		3-26-99

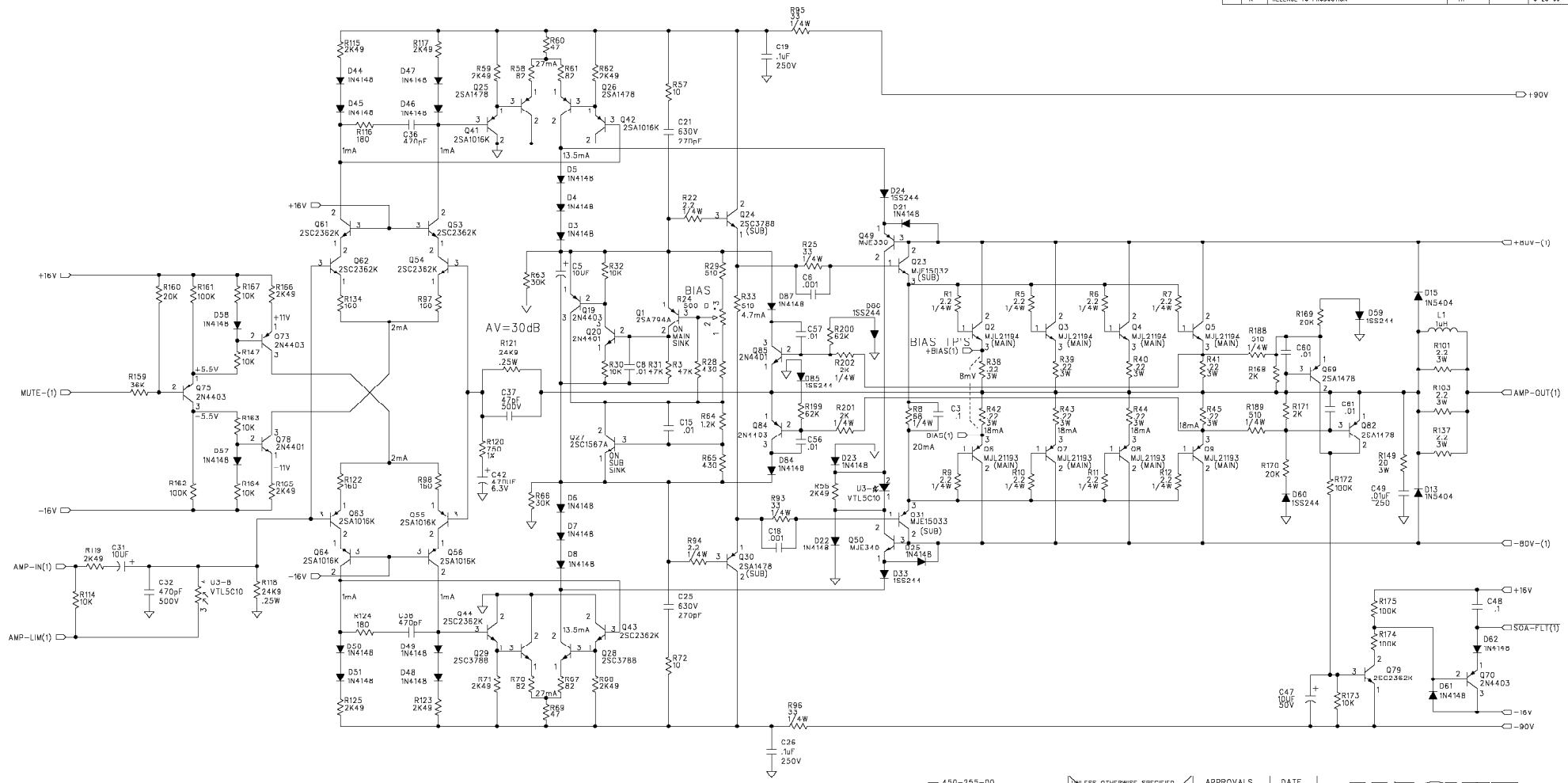

☐ 450-255-00 PCB, MAIN M-1400-S2
☐ 400-060-00 FUSE CLIP PC MT 5mm DIA
☐ 400-129-00 FUSE CLIP PC MT .25" DIA

UNLESS OTHERWISE SPECIFIED DIMENSIONS ARE IN INCHES TOLERANCES ARE:
FRACTIONS ±NA DECIMALS: .XX ±.01 .XXX ±.005 ANGLES: ±NA

MATERIAL: SEE NOTES
FINISH: SEE NOTES
DO NOT SCALE DRAWING

APPROVALS	DATE
DRAWN: Cam Jones	1-22-99
CHECKED:	
NP ENG:	
MATERIAL:	
MFG:	
MFG ENG:	
ISSUED:	

MACKIE.
Mackie Designs Inc. Woodinville, Wa.

SCHEM, M-1400, M-1400i
CH 1 MAIN AMP

SIZE	SCALE:	DWG. NO.	REV.
D	NONE	990-255-00	A

DWG FILE: SHEET 1 OF 3

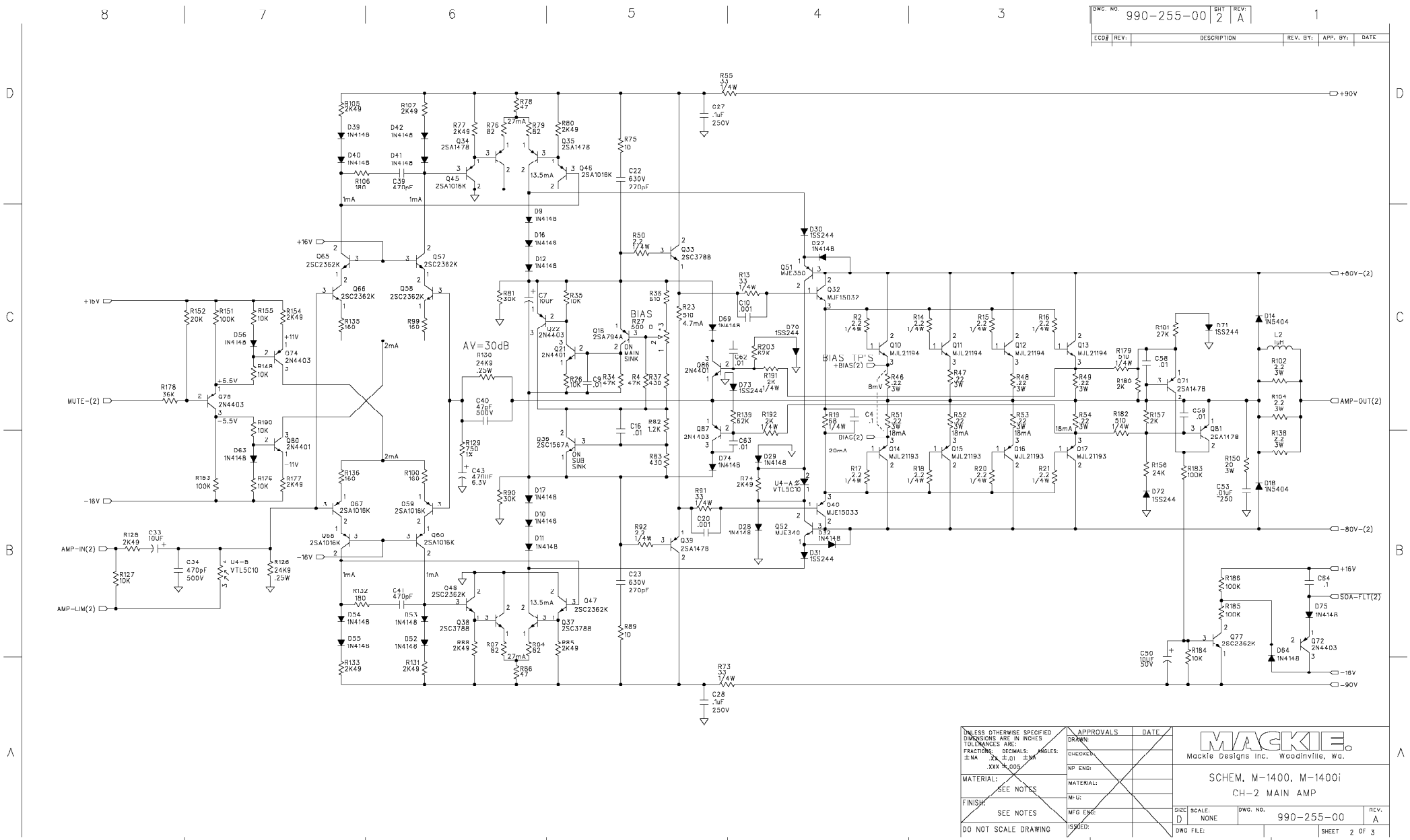
DWG. NO. 990-255-00 SHT 2 REV: A
ECO# REV: DESCRIPTION REV. BY: APP. BY: DATE
+90V
+80V-(2)
AMP-OUT(2)
-80V-(2)
-90V
+16V
-16V
MUTE-(2)
AMP-IN(2)
AMP-LIM(2)
SOA-FLT(2)
AV=30dB
BIAS
BIAS TP'S
+BIAS(2)
BIAS(2)
ON MAIN SINK
ON SUB SINK
MJL21194
MJL21193
MJF15032
MJE15033
MJE350
MJE340
2SC3788
2SC1567A
2SA1018K
2SC2362K
2SA1016K
2SA1478
2SA1017B
2SC2362K
2N4403
2N4401
2SA794A
VTL5C10
1SS244
1N4148
1N5404
MACKIE
Mackie Designs Inc. Woodinville, Wa.
SCHEM, M-1400, M-1400i
CH-2 MAIN AMP
SIZE D SCALE: NONE DWG. NO. 990-255-00 REV. A
DWG FILE:
SHEET 2 OF 3
UNLESS OTHERWISE SPECIFIED DIMENSIONS ARE IN INCHES
TOLERANCES ARE:
FRACTIONS: ±NA DECIMALS: .XX ±.01 .XXX ±.005 ANGLES: ±NA
MATERIAL: SEE NOTES
FINISH: SEE NOTES
DO NOT SCALE DRAWING
APPROVALS DATE
DRAWN:
CHECKED:
NP ENG:
MATERIAL:
MFG:
MFG ENG:
ISSUED:

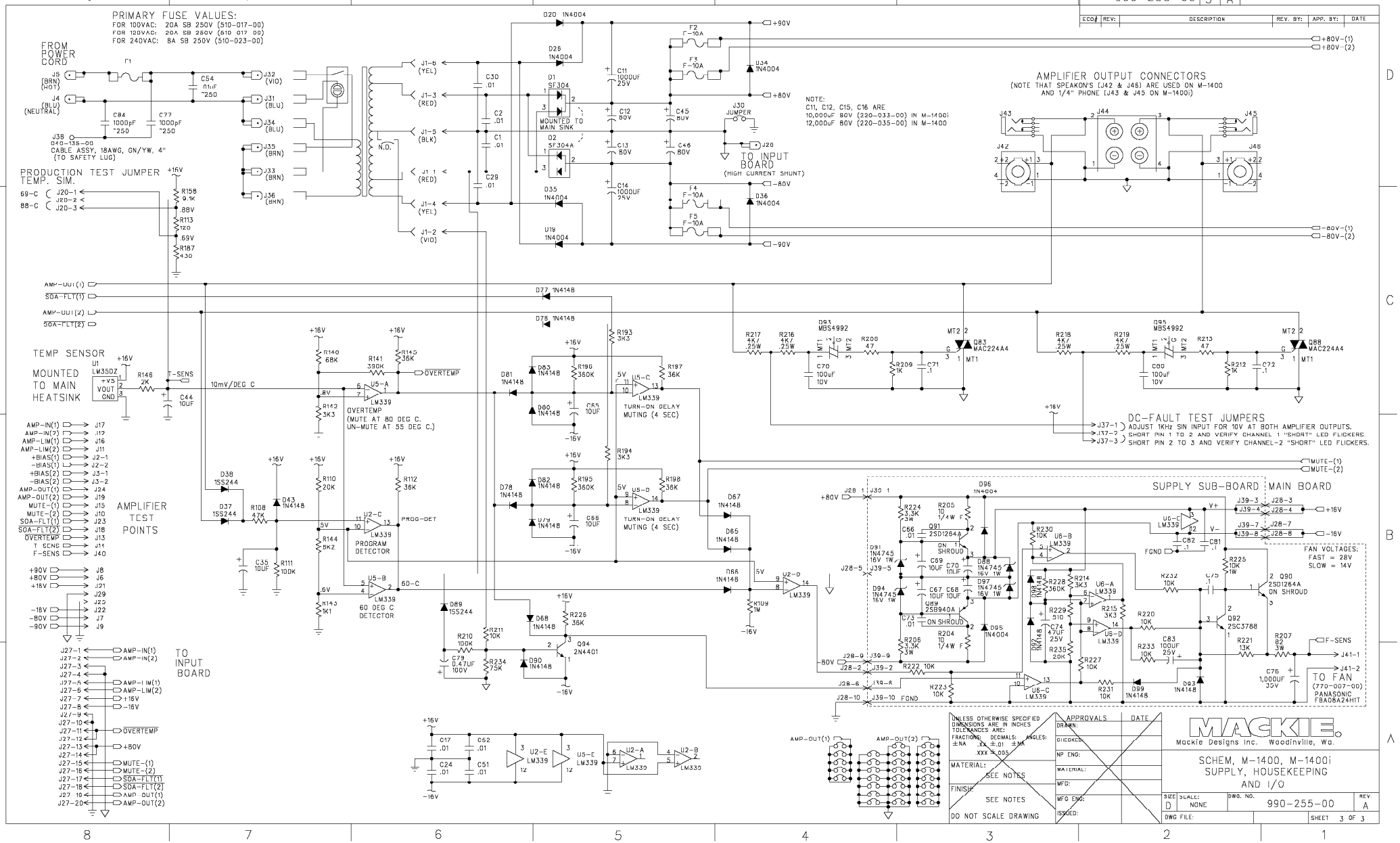
PRIMARY FUSE VALUES:
FOR 100VAC: 20A SB 250V (510-017-00)
FOR 120VAC: 20A SB 250V (510-017-00)
FOR 240VAC: 8A SB 250V (510-023-00)
FROM POWER CORD
J5 (BRN) (HOT)
J4 (BLU) (NEUTRAL)
J38 040-135-00
CABLE ASSY, 18AWG, GN/YW, 4" (TO SAFETY LUG)
PRODUCTION TEST JUMPER
TEMP. SIM.
69-C J20-1
J20-2
88-C J20-3
TEMP SENSOR
MOUNTED TO MAIN HEATSINK
U1 LM35DZ
+VS
VOUT
GND
T-SENS
10mV/DEG C
OVERTEMP
(MUTE AT 80 DEG C. UN-MUTE AT 55 DEG C.)
PROGRAM DETECTOR
60 DEG C DETECTOR
TURN-ON DELAY MUTING (4 SEC)
AMPLIFIER TEST POINTS
AMP-IN(1) J17
AMP-IN(2) J12
AMP-LIM(1) J16
AMP-LIM(2) J11
+BIAS(1) J2-1
-BIAS(1) J2-2
+BIAS(2) J3-1
-BIAS(2) J3-2
AMP-OUT(1) J24
AMP-OUT(2) J19
MUTE-(1) J15
MUTE-(2) J10
SOA-FLT(1) J23
SOA-FLT(2) J18
OVERTEMP J13
T SENS J14
F-SENS J40
+90V J8
+80V J6
+16V J21
J29
J25
-16V J22
-80V J7
-90V J9
TO INPUT BOARD
J27-1 AMP-IN(1)
J27-2 AMP-IN(2)
J27-5 AMP-LIM(1)
J27-6 AMP-LIM(2)
J27-7 +16V
J27-8 -16V
J27-11 OVERTEMP
J27-13 +80V
J27-15 MUTE-(1)
J27-16 MUTE-(2)
J27-17 SOA-FLT(1)
J27-18 SOA-FLT(2)
J27-19 AMP-OUT(1)
J27-20 AMP-OUT(2)
NOTE:
C11, C12, C15, C16 ARE
10,000uF 80V (220-033-00) IN M-1400i
12,000uF 80V (220-035-00) IN M-1400
TO INPUT BOARD
(HIGH CURRENT SHUNT)
AMPLIFIER OUTPUT CONNECTORS
(NOTE THAT SPEAKON'S (J42 & J46) ARE USED ON M-1400 AND 1/4" PHONE (J43 & J45 ON M-1400i)
DC-FAULT TEST JUMPERS
J37-1 ADJUST 1KHz SIN INPUT FOR 10V AT BOTH AMPLIFIER OUTPUTS.
J37-2 SHORT PIN 1 TO 2 AND VERIFY CHANNEL 1 "SHORT" LED FLICKERS.
J37-3 SHORT PIN 2 TO 3 AND VERIFY CHANNEL-2 "SHORT" LED FLICKERS.
SUPPLY SUB-BOARD
MAIN BOARD
FAN VOLTAGES:
FAST = 28V
SLOW = 14V
TO FAN
(770-007-00)
PANASONIC
FBA08A24H1T
DWG NO 990-255-00
SHT 3
REV A
ECO# REV: DESCRIPTION REV. BY: APP. BY: DATE
UNLESS OTHERWISE SPECIFIED DIMENSIONS ARE IN INCHES
TOLERANCES ARE:
FRACTIONS: ±NA DECIMALS: .XX ±.01 .XXX ±.005 ANGLES: ±NA
MATERIAL: SEE NOTES
FINISH: SEE NOTES
DO NOT SCALE DRAWING
APPROVALS DATE
DRAWN:
CHECKED:
NP ENG:
MATERIAL:
MFG:
MFG ENG:
ISSUED:
MACKIE.
Mackie Designs Inc. Woodinville, Wa.
SCHEM, M-1400, M-1400i
SUPPLY, HOUSEKEEPING
AND I/O
SIZE D
SCALE: NONE
DWG. NO. 990-255-00
REV A
DWG FILE:
SHEET 3 OF 3

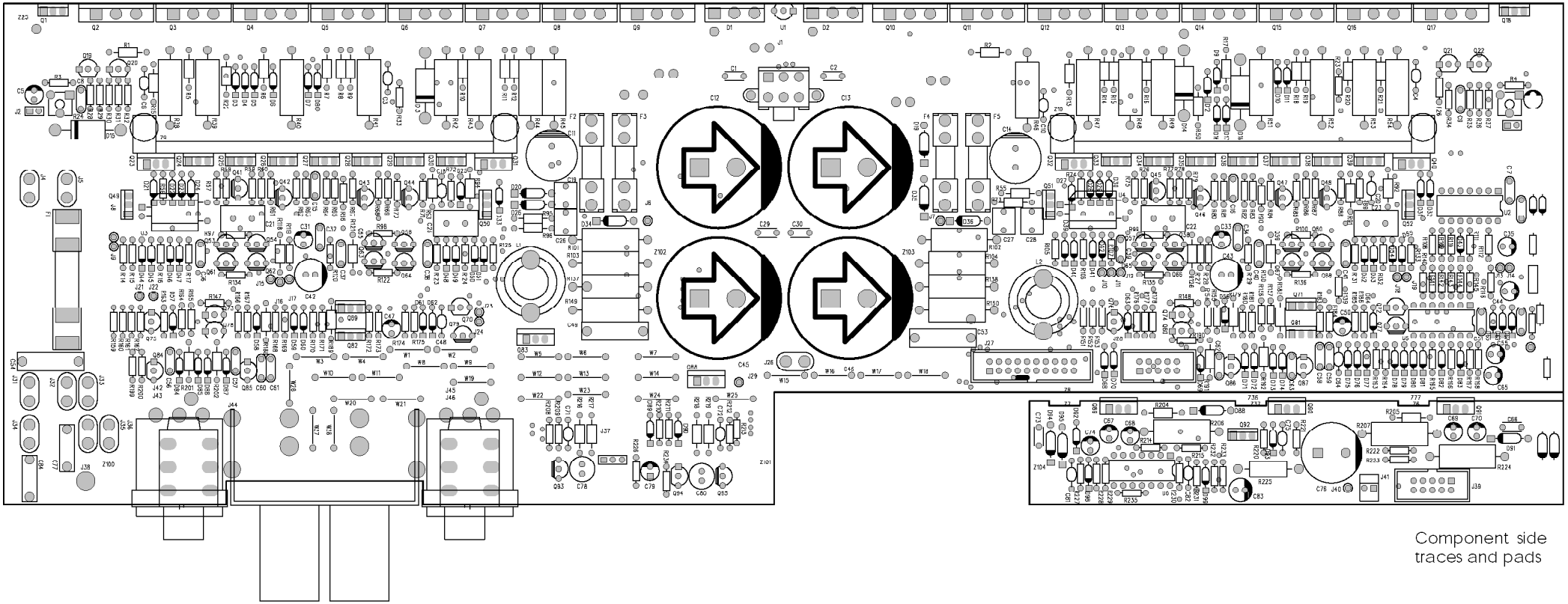

Component side
traces and pads

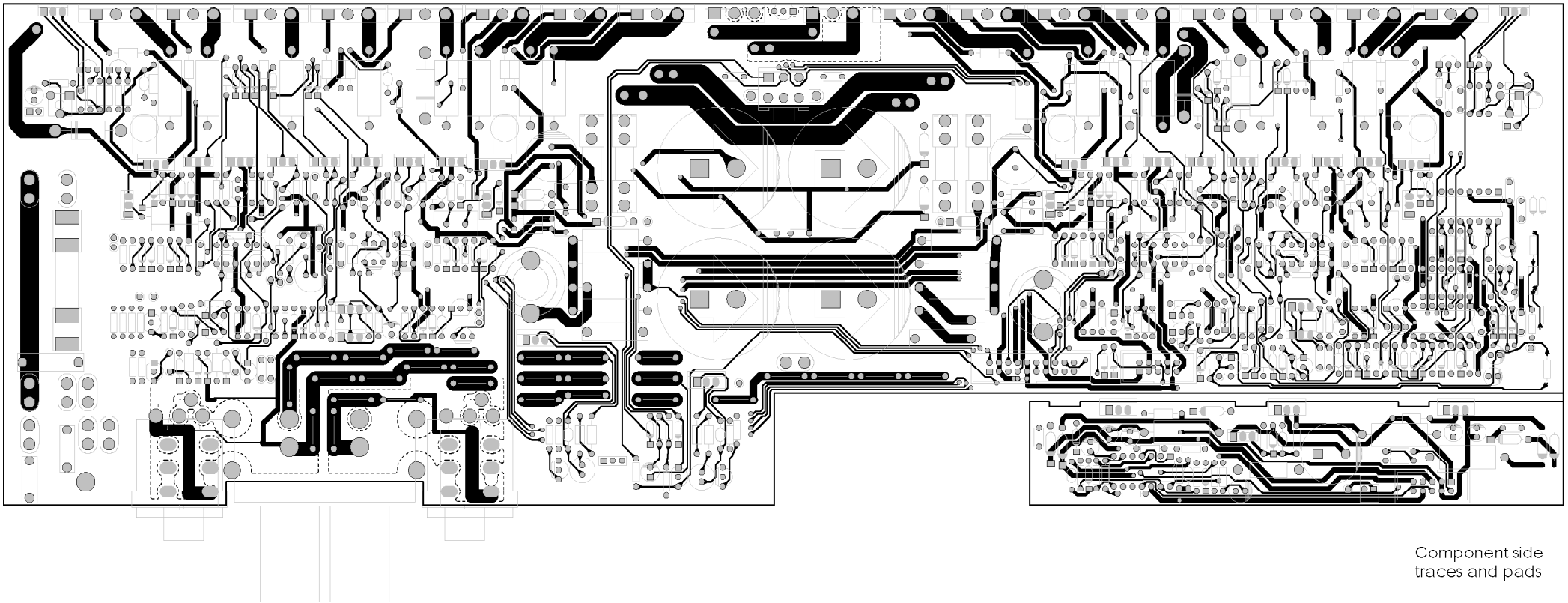

Component side
traces and pads

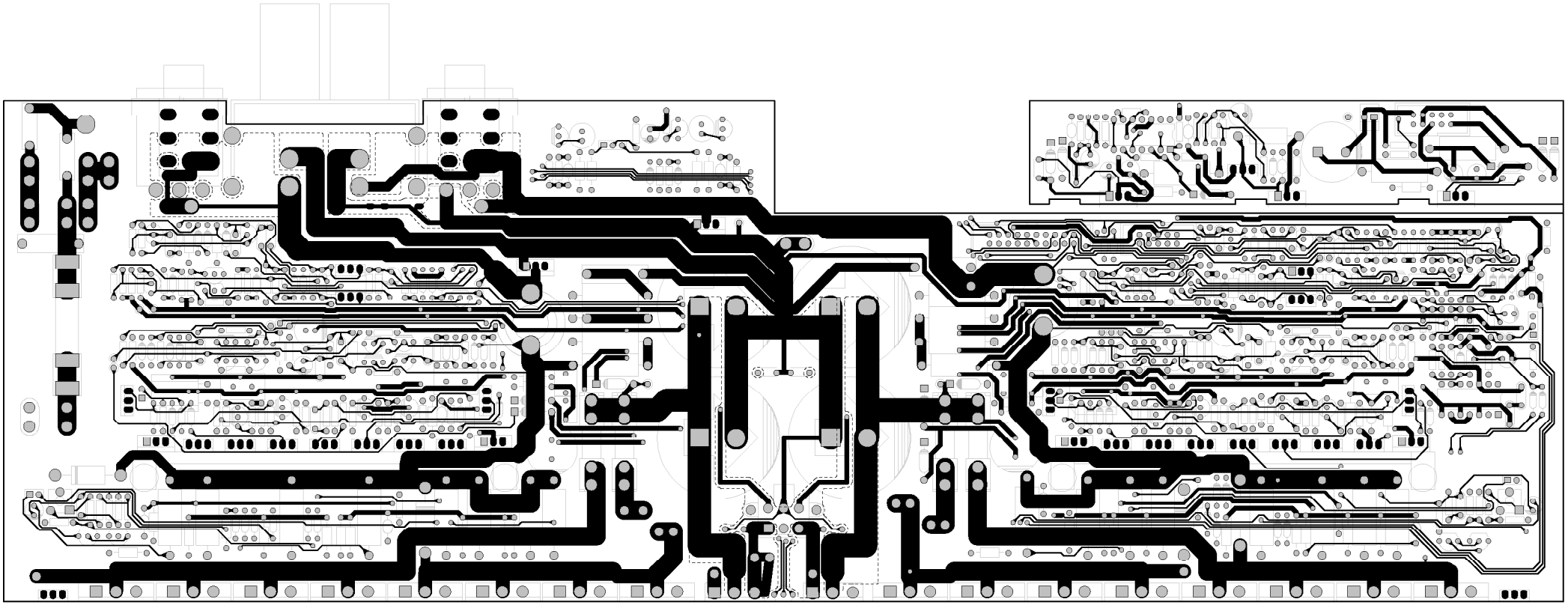

Solder side
traces and pads

DWG. NO.	990-255-00	SHT 1	REV: A

REV:	ECO#	DESCRIPTION	REV. BY:	APP. BY:	DATE
	1	MADE FROM 990-051-00 W/ DESIGNS CHANGES. INCORP ECO3: 1092,1096, 1142, 1170, 1203, 104, 1338, 1400, 1433 218, 2134	WCW		2 12 99
	A	RELEASE TO PRODUCTION	TH		3-26-99

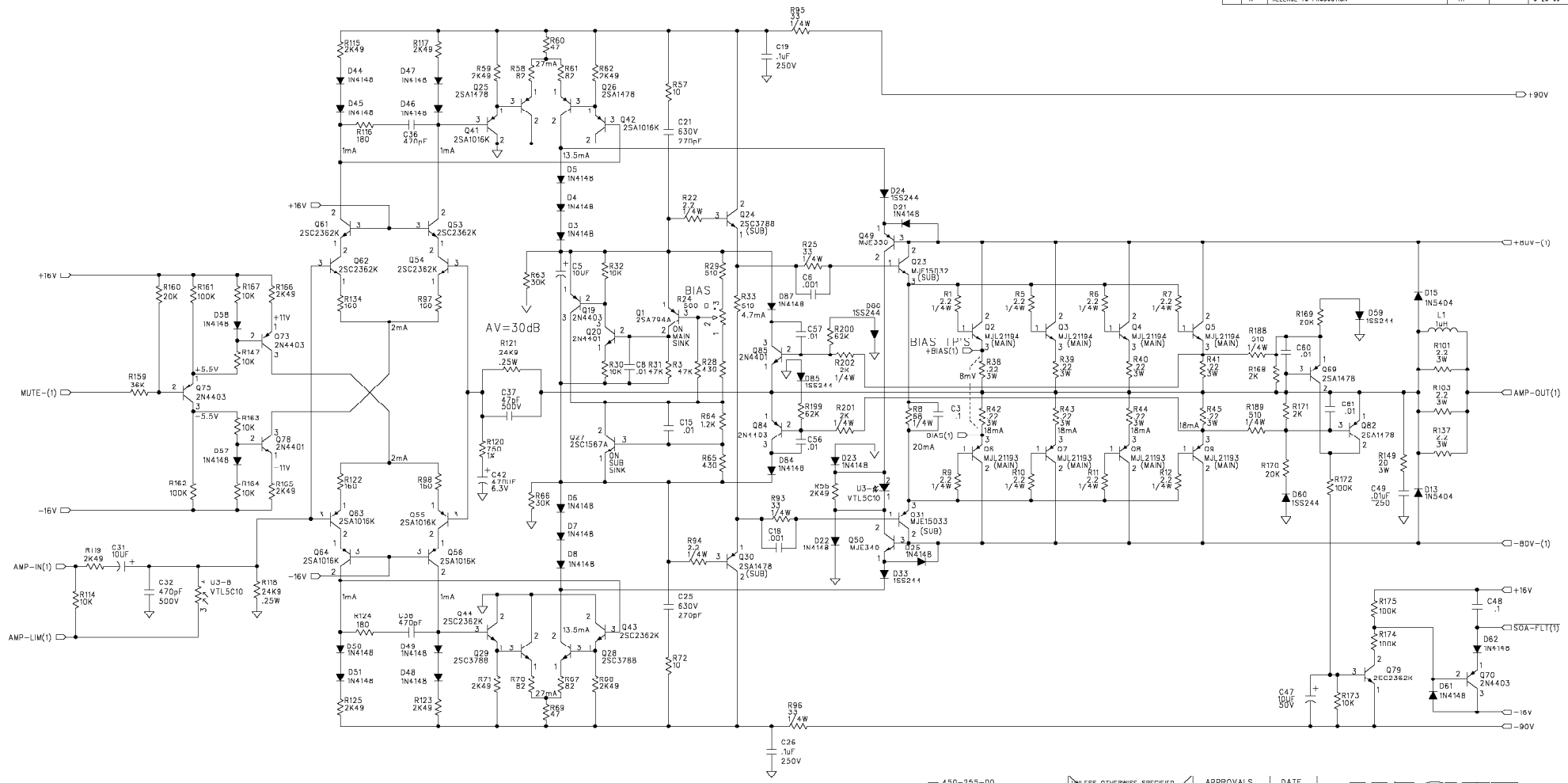

☐ 450-255-00 PCB, MAIN M-1400-S2
☐ 400-060-00 FUSE CLIP PC MT 5mm DIA
☐ 400-129-00 FUSE CLIP PC MT .25" DIA

UNLESS OTHERWISE SPECIFIED DIMENSIONS ARE IN INCHES TOLERANCES ARE:
FRACTIONS ±NA DECIMALS: .XX ±.01 .XXX ±.005 ANGLES: ±NA

MATERIAL: SEE NOTES
FINISH: SEE NOTES
DO NOT SCALE DRAWING

APPROVALS	DATE
DRAWN: Cam Jones	1-22-99
CHECKED:	
NP ENG:	
MATERIAL:	
MFG:	
MFG ENG:	
ISSUED:	

MACKIE.
Mackie Designs Inc. Woodinville, Wa.

SCHEM, M-1400, M-1400i
CH 1 MAIN AMP

SIZE	SCALE:	DWG. NO.	REV.
D	NONE	990-255-00	A

DWG FILE: SHEET 1 OF 3

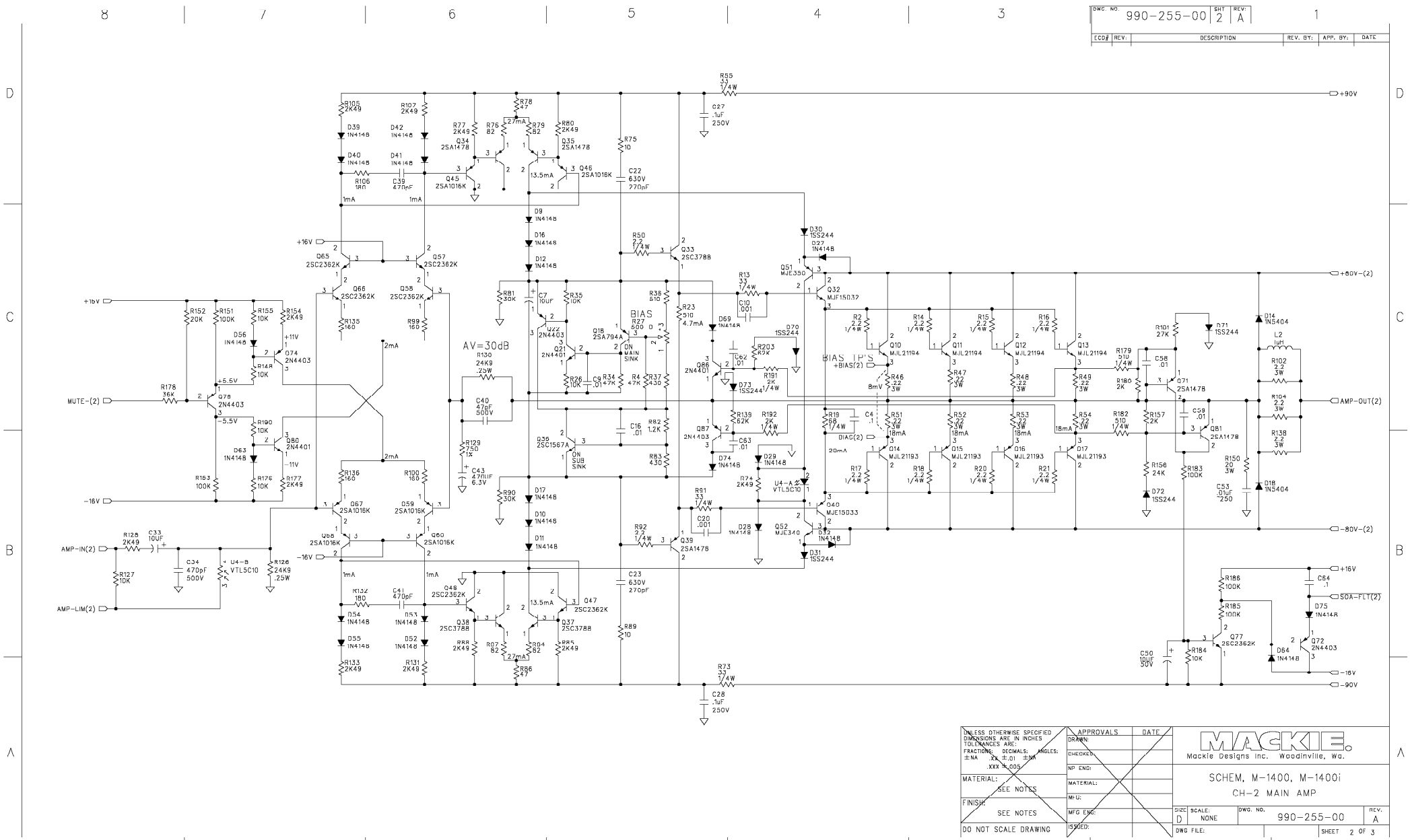
DWG. NO. 990-255-00 SHT 2 REV: A
ECO# REV: DESCRIPTION REV. BY: APP. BY: DATE
+90V
+80V-(2)
AMP-OUT(2)
-80V-(2)
-90V
+16V
-16V
MUTE-(2)
AMP-IN(2)
AMP-LIM(2)
SOA-FLT(2)
AV=30dB
BIAS
BIAS TP'S
+BIAS(2)
BIAS(2)
ON MAIN SINK
ON SUB SINK
MJL21194
MJL21193
MJF15032
MJE15033
MJE350
MJE340
2SC3788
2SC1567A
2SA1018K
2SC2362K
2SA1016K
2SA1478
2SA1017B
2SC2362K
2N4403
2N4401
2SA794A
VTL5C10
1SS244
1N4148
1N5404
MACKIE
Mackie Designs Inc. Woodinville, Wa.
SCHEM, M-1400, M-1400i
CH-2 MAIN AMP
SIZE D SCALE: NONE DWG. NO. 990-255-00 REV. A
DWG FILE:
SHEET 2 OF 3
UNLESS OTHERWISE SPECIFIED DIMENSIONS ARE IN INCHES
TOLERANCES ARE:
FRACTIONS: ±NA DECIMALS: .XX ±.01 .XXX ±.005 ANGLES: ±NA
MATERIAL: SEE NOTES
FINISH: SEE NOTES
DO NOT SCALE DRAWING
APPROVALS DATE
DRAWN:
CHECKED:
NP ENG:
MATERIAL:
MFG:
MFG ENG:
ISSUED:

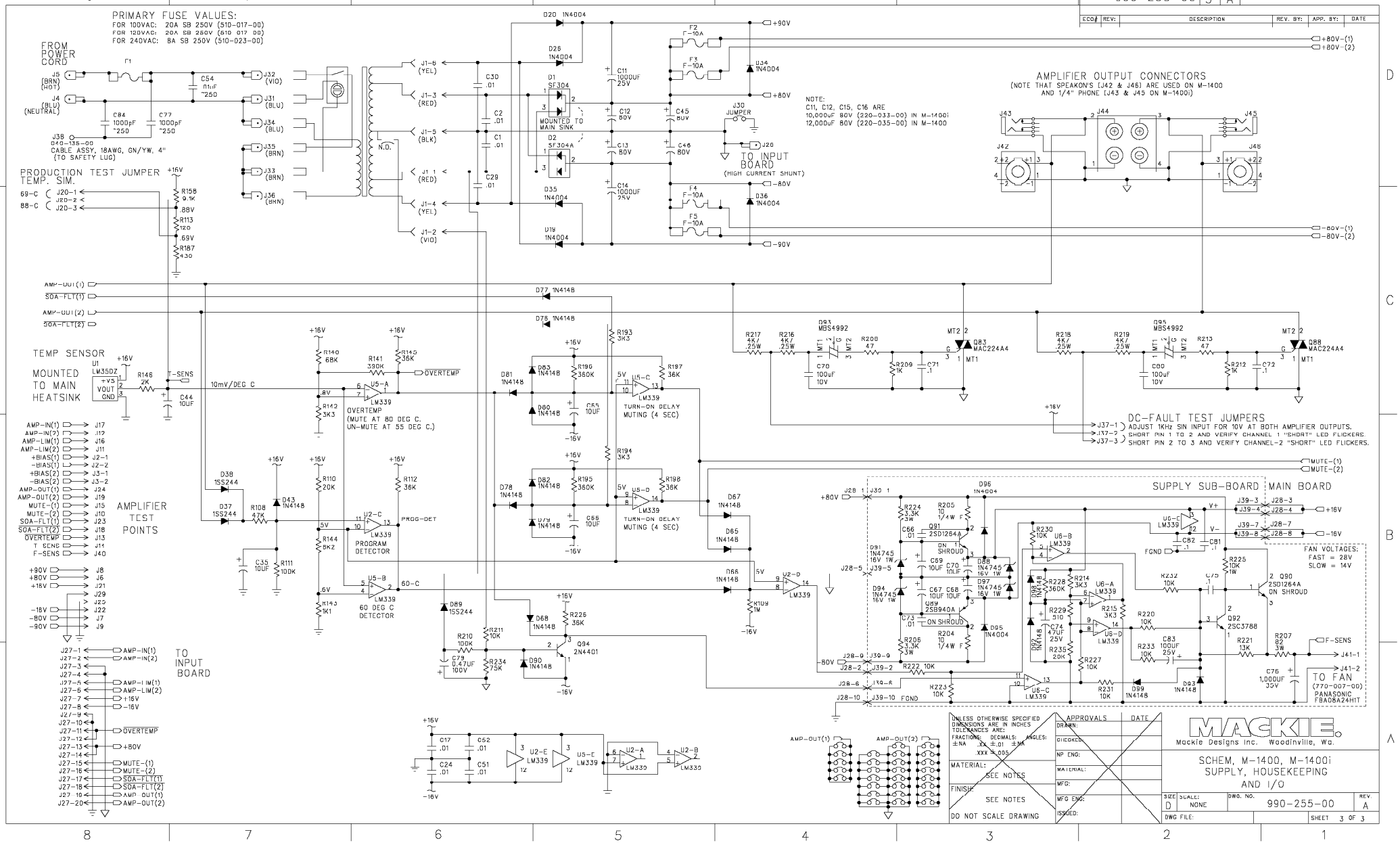
PRIMARY FUSE VALUES:
FOR 100VAC: 20A SB 250V (510-017-00)
FOR 120VAC: 20A SB 250V (510-017-00)
FOR 240VAC: 8A SB 250V (510-023-00)
FROM POWER CORD
J5 (BRN) (HOT)
J4 (BLU) (NEUTRAL)
J38 040-135-00
CABLE ASSY, 18AWG, GN/YW, 4" (TO SAFETY LUG)
PRODUCTION TEST JUMPER
TEMP. SIM.
69-C J20-1
J20-2
88-C J20-3
TEMP SENSOR
MOUNTED TO MAIN HEATSINK
U1 LM35DZ
+VS
VOUT
GND
T-SENS
10mV/DEG C
OVERTEMP
(MUTE AT 80 DEG C. UN-MUTE AT 55 DEG C.)
PROGRAM DETECTOR
60 DEG C DETECTOR
TURN-ON DELAY MUTING (4 SEC)
AMPLIFIER TEST POINTS
AMP-IN(1) J17
AMP-IN(2) J12
AMP-LIM(1) J16
AMP-LIM(2) J11
+BIAS(1) J2-1
-BIAS(1) J2-2
+BIAS(2) J3-1
-BIAS(2) J3-2
AMP-OUT(1) J24
AMP-OUT(2) J19
MUTE-(1) J15
MUTE-(2) J10
SOA-FLT(1) J23
SOA-FLT(2) J18
OVERTEMP J13
T SENS J14
F-SENS J40
+90V J8
+80V J6
+16V J21
J29
J25
-16V J22
-80V J7
-90V J9
TO INPUT BOARD
J27-1 AMP-IN(1)
J27-2 AMP-IN(2)
J27-5 AMP-LIM(1)
J27-6 AMP-LIM(2)
J27-7 +16V
J27-8 -16V
J27-11 OVERTEMP
J27-13 +80V
J27-15 MUTE-(1)
J27-16 MUTE-(2)
J27-17 SOA-FLT(1)
J27-18 SOA-FLT(2)
J27-19 AMP-OUT(1)
J27-20 AMP-OUT(2)
NOTE:
C11, C12, C15, C16 ARE
10,000uF 80V (220-033-00) IN M-1400i
12,000uF 80V (220-035-00) IN M-1400
TO INPUT BOARD
(HIGH CURRENT SHUNT)
AMPLIFIER OUTPUT CONNECTORS
(NOTE THAT SPEAKON'S (J42 & J46) ARE USED ON M-1400 AND 1/4" PHONE (J43 & J45 ON M-1400i)
DC-FAULT TEST JUMPERS
J37-1 ADJUST 1KHz SIN INPUT FOR 10V AT BOTH AMPLIFIER OUTPUTS.
J37-2 SHORT PIN 1 TO 2 AND VERIFY CHANNEL 1 "SHORT" LED FLICKERS.
J37-3 SHORT PIN 2 TO 3 AND VERIFY CHANNEL-2 "SHORT" LED FLICKERS.
SUPPLY SUB-BOARD
MAIN BOARD
FAN VOLTAGES:
FAST = 28V
SLOW = 14V
TO FAN
(770-007-00)
PANASONIC
FBA08A24H1T
DWG NO 990-255-00
SHT 3
REV A
ECO# REV: DESCRIPTION REV. BY: APP. BY: DATE
UNLESS OTHERWISE SPECIFIED DIMENSIONS ARE IN INCHES
TOLERANCES ARE:
FRACTIONS: ±NA DECIMALS: .XX ±.01 .XXX ±.005 ANGLES: ±NA
MATERIAL: SEE NOTES
FINISH: SEE NOTES
DO NOT SCALE DRAWING
APPROVALS DATE
DRAWN:
CHECKED:
NP ENG:
MATERIAL:
MFG:
MFG ENG:
ISSUED:
MACKIE.
Mackie Designs Inc. Woodinville, Wa.
SCHEM, M-1400, M-1400i
SUPPLY, HOUSEKEEPING
AND I/O
SIZE D
SCALE: NONE
DWG. NO. 990-255-00
REV A
DWG FILE:
SHEET 3 OF 3

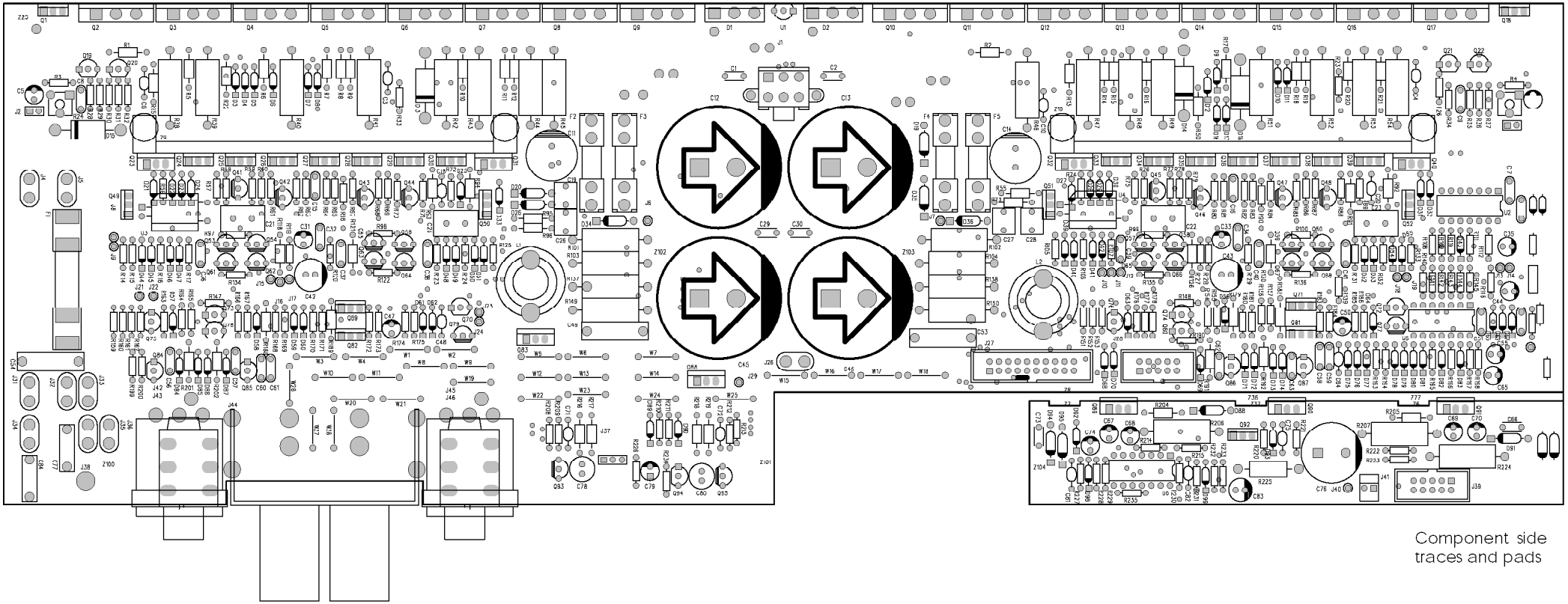

Component side
traces and pads

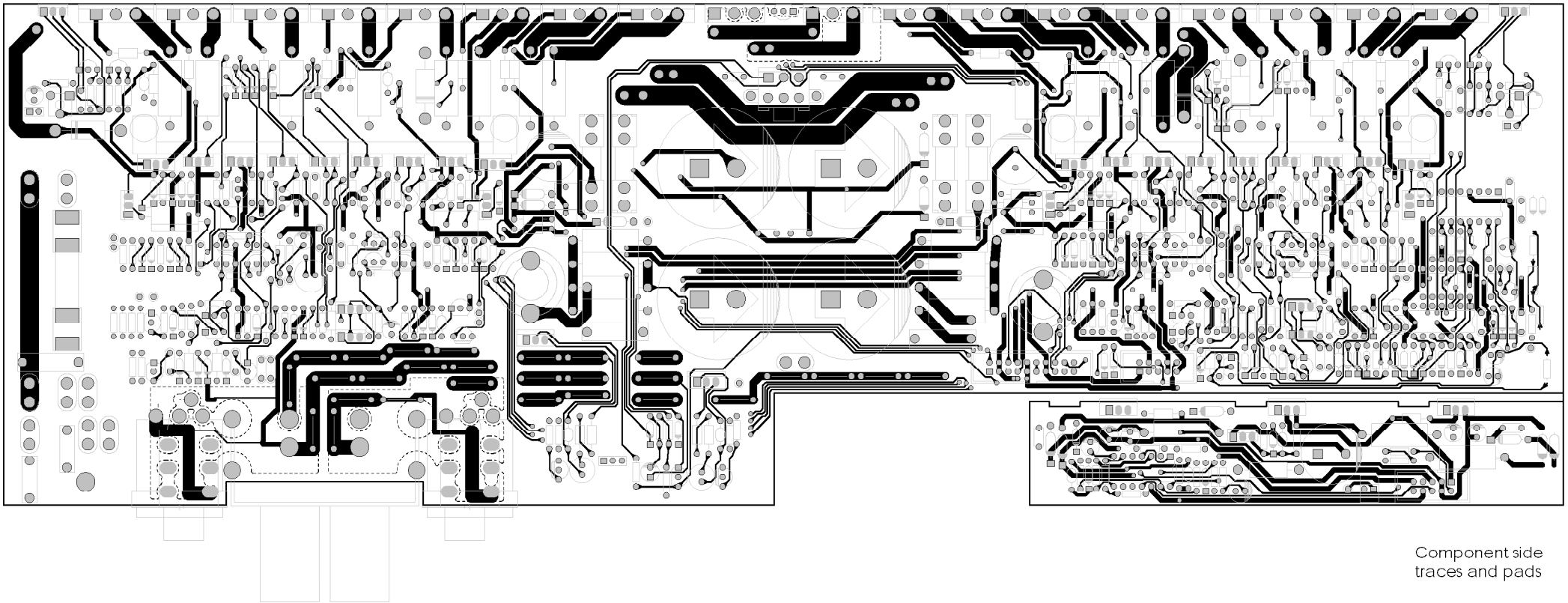

Component side
traces and pads

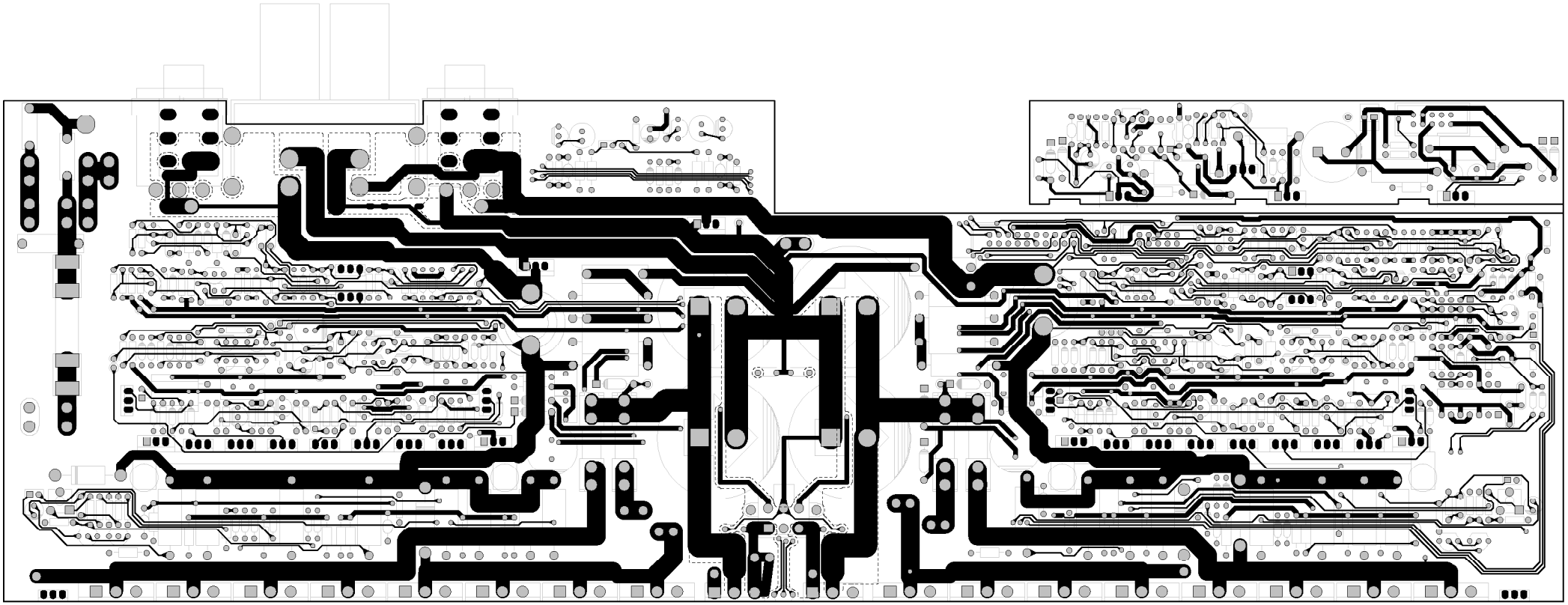

Solder side
traces and pads

DWG. NO.	SHT	REV:
990-254-00	1	A

ECO#	REV:	DESCRIPTION	REV. BY:	APP. BY:	DATE
	1	MADE FROM 990-080 W/DESIGN CHANGES. INCORP ECOS: 1116, 1118, 1121, 1137, 1327, 1359 AND 2100.	TH		2-10-99
	A	RELEASE TO PRODUCTION	TH		3-26-99

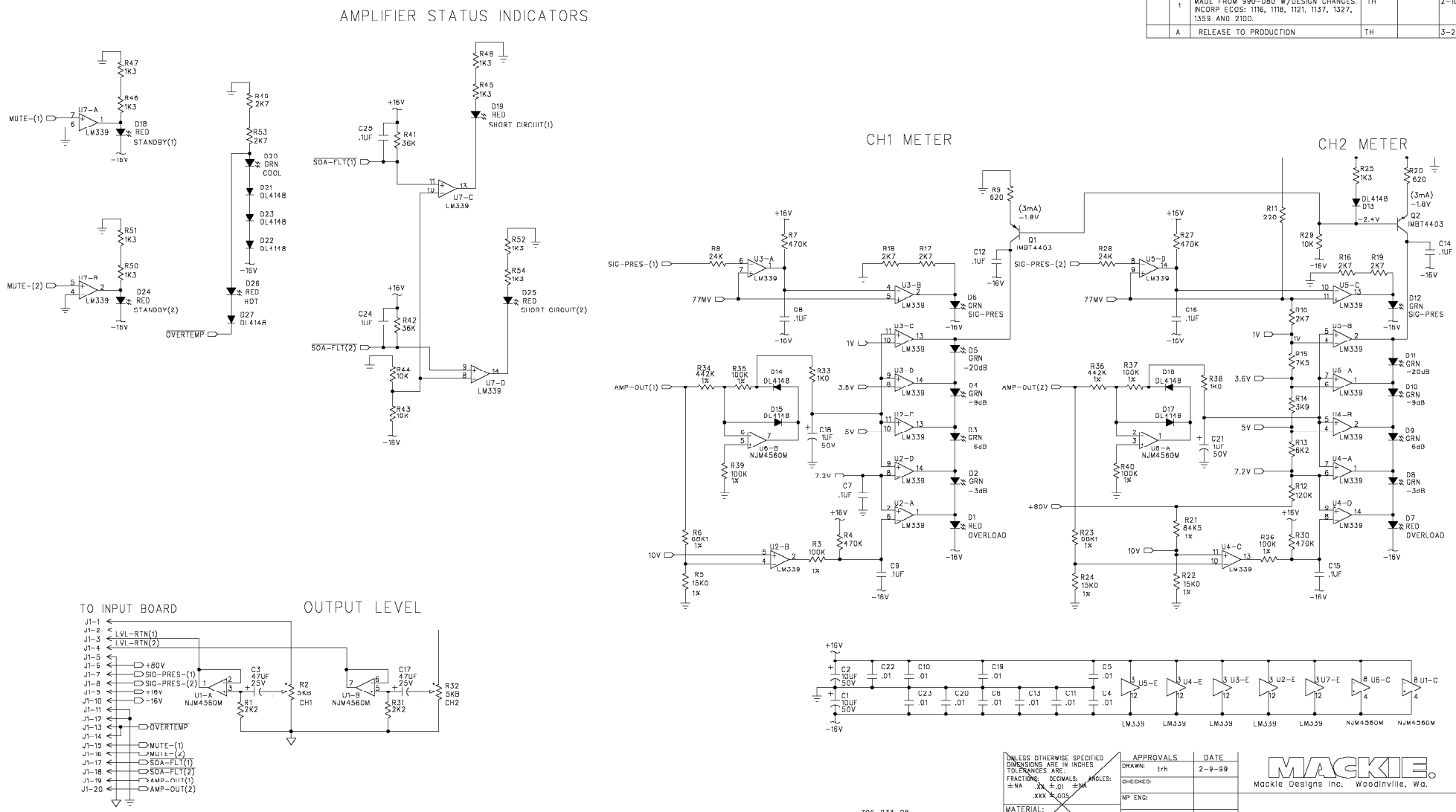

UNLESS OTHERWISE SPECIFIED DIMENSIONS ARE IN INCHES TOLERANCES ARE: FRACTIONS: ±NA DECIMALS: .XX ±.01 .XXX ±.005 ANGLES: ±NA	APPROVALS	DATE
	DRAWN: trh	2-9-99
	CHECKED:	
	NP ENG:	
MATERIAL: SEE NOTES	MATERIAL:	
FINISH: SEE NOTES	MFG:	
	MFG ENG:	
DO NOT SCALE DRAWING	ISSUED:	

☐ 706 033 08 STDF SWAGE NO.4 X .665

☐ 450-254-00 PCB, DISPLAY, M1400 S2

MACKIE.
Mackie Designs Inc. Woodinville, Wa.

SCHEMATIC, DISPLAY, M1400 S2

SIZE	SCALE:	DWG. NO.	REV.
D	NONE	990-254-00	A

DWG FILE: SHEET 1 OF 1

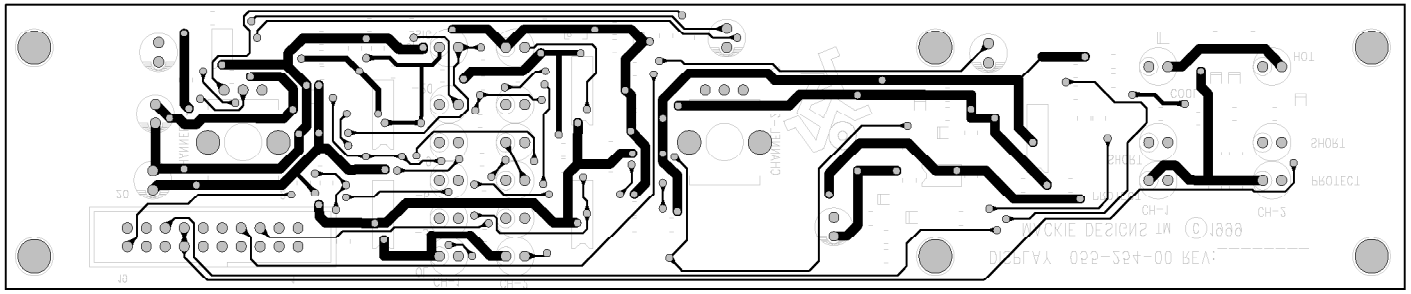

Solder side
traces and pads

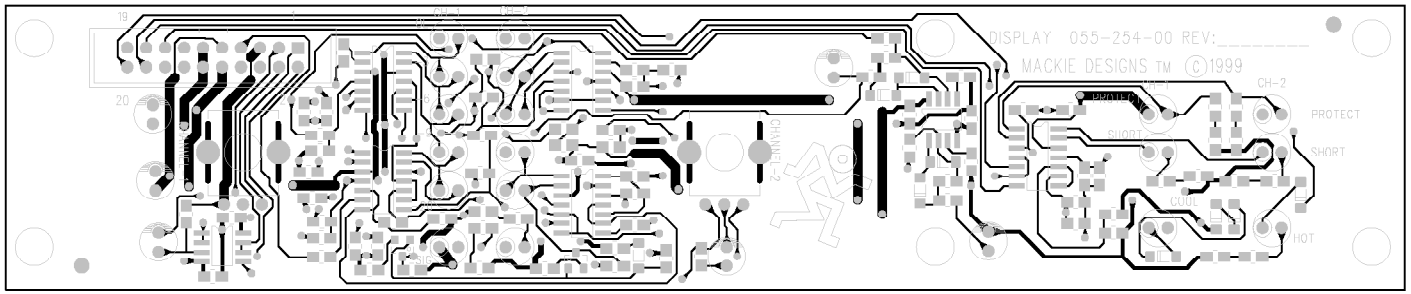

Component side
traces and pads

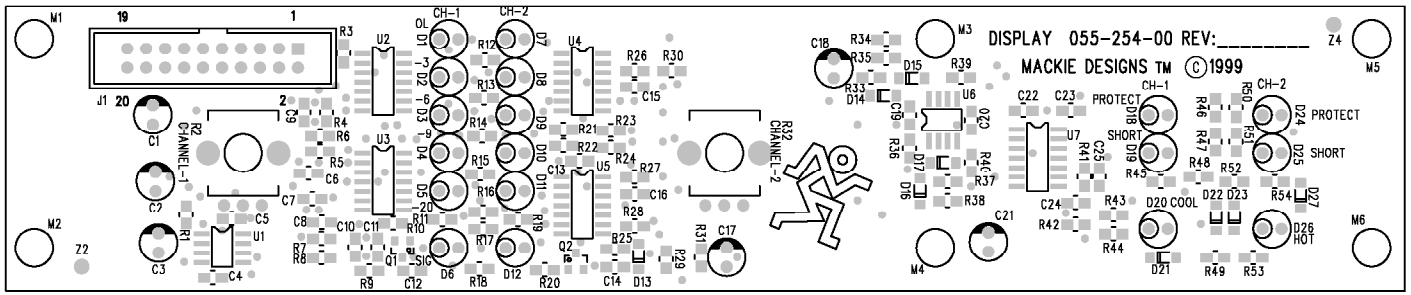

Component side

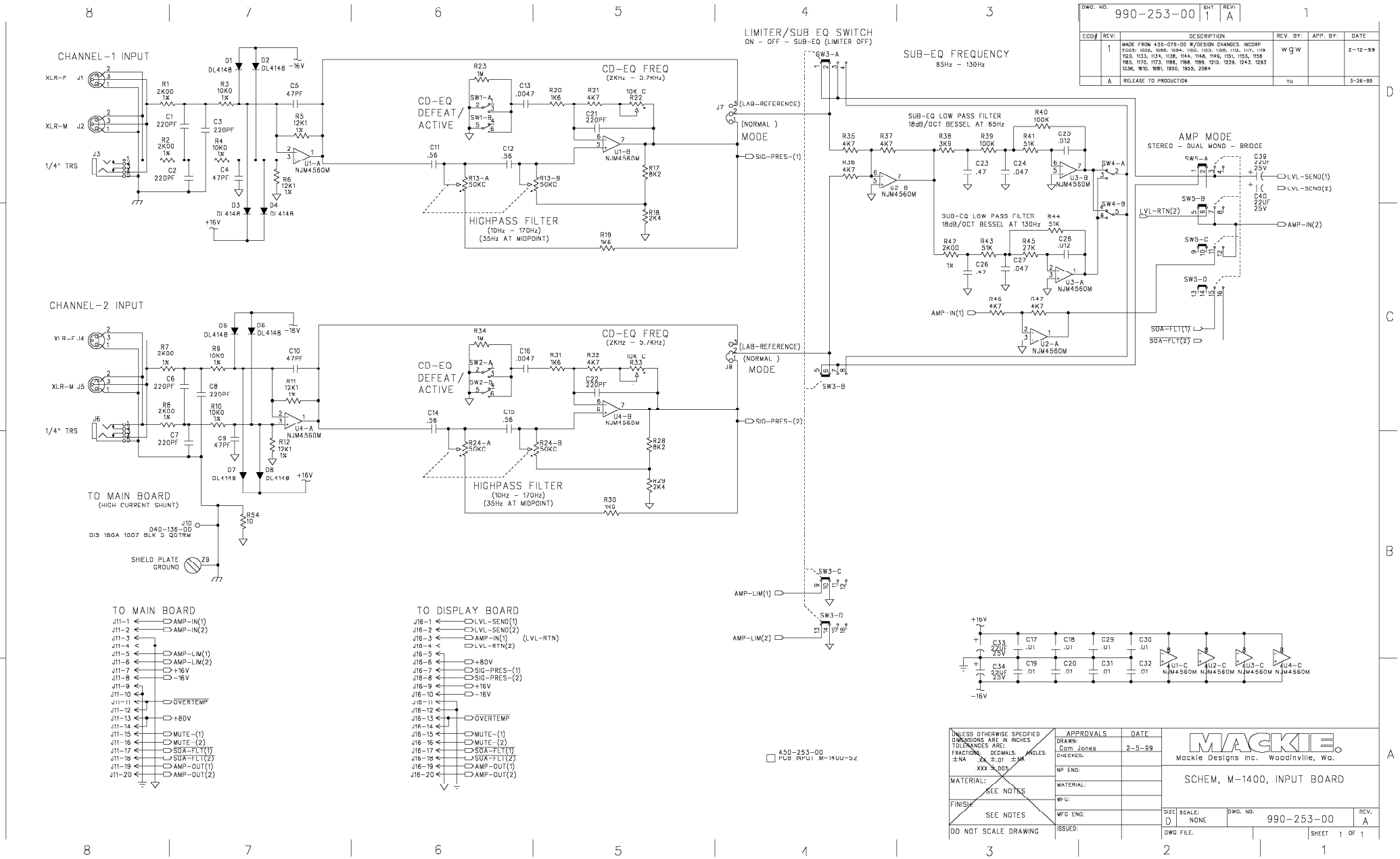
DWG. NO. 990-253-00 SHT 1 REV: A
ECO# REV: DESCRIPTION REV. BY: APP. BY: DATE
1 MADE FROM 450-078-00 W/DESIGN CHANGES. INCORP ECO3: 1002, 1089, 1094, 1100, 1103, 1105, 1112, 1117, 1119 1120, 1133, 1134, 1138, 1144, 1148, 1149, 1151, 1155, 1158 1165, 1170, 1173, 1186, 1188, 1198, 1215, 1229, 1243, 1293 1336, 1610, 1681, 1930, 1955, 2064 WGW 2-12-99
A RELEASE TO PRODUCTION TH 3-26-99
CHANNEL-1 INPUT
CHANNEL-2 INPUT
XLR-F J1
XLR-M J2
1/4" TRS J3
XLR-F J4
XLR-M J5
1/4" TRS J6
CD-EQ FREQ
(2KHz - 5.7KHz)
CD-EQ DEFEAT/ ACTIVE
HIGHPASS FILTER
(10Hz - 170Hz)
(35Hz AT MIDPOINT)
LIMITER/SUB EQ SWITCH
ON - OFF - SUB-EQ (LIMITER OFF)
(LAB-REFERENCE)
(NORMAL)
MODE
SIG-PRES-(1)
SIG-PRES-(2)
SUB-EQ FREQUENCY
85Hz - 130Hz
SUB-EQ LOW PASS FILTER
18dB/OCT BESSEL AT 85Hz
SUB-EQ LOW PASS FILTER
18dB/OCT BESSEL AT 130Hz
AMP MODE
STEREO - DUAL MONO - BRIDGE
LVL-SEND(1)
LVL-SEND(2)
LVL-RTN(2)
AMP-IN(2)
AMP-IN(1)
SOA-FLT(1)
SOA-FLT(2)
AMP-LIM(1)
AMP-LIM(2)
TO MAIN BOARD
(HIGH CURRENT SHUNT)
J10
D40-136-00
DIS 18GA 1007 BLK 9 QDTRM
SHIELD PLATE GROUND
Z9
TO MAIN BOARD
J11-1 AMP-IN(1)
J11-2 AMP-IN(2)
J11-5 AMP-LIM(1)
J11-6 AMP-LIM(2)
J11-7 +16V
J11-8 -16V
J11-11 OVERTEMP
J11-13 +80V
J11-15 MUTE-(1)
J11-16 MUTE-(2)
J11-17 SOA-FLT(1)
J11-18 SOA-FLT(2)
J11-19 AMP-OUT(1)
J11-20 AMP-OUT(2)
TO DISPLAY BOARD
J16-1 LVL-SEND(1)
J16-2 LVL-SEND(2)
J16-3 AMP-IN(1) (LVL-RTN)
J16-4 LVL-RTN(2)
J16-6 +80V
J16-7 SIG-PRES-(1)
J16-8 SIG-PRES-(2)
J16-9 +16V
J16-10 -16V
J16-13 OVERTEMP
J16-15 MUTE-(1)
J16-16 MUTE-(2)
J16-17 SOA-FLT(1)
J16-18 SOA-FLT(2)
J16-19 AMP-OUT(1)
J16-20 AMP-OUT(2)
450-253-00
PCB INPUT M-1400-S2
UNLESS OTHERWISE SPECIFIED DIMENSIONS ARE IN INCHES
TOLERANCES ARE:
FRACTIONS: ±NA DECIMALS: .XX ±.01 .XXX ±.005 ANGLES: ±NA
MATERIAL: SEE NOTES
FINISH: SEE NOTES
DO NOT SCALE DRAWING
APPROVALS DATE
DRAWN: Cam Jones 2-5-99
CHECKED:
NP ENG:
MATERIAL:
MFG:
MFG ENG:
ISSUED:
MACKIE
Mackie Designs Inc. Woodinville, Wa.
SCHEM, M-1400, INPUT BOARD
SIZE D SCALE: NONE DWG. NO. 990-253-00 REV. A
DWG FILE:
SHEET 1 OF 1

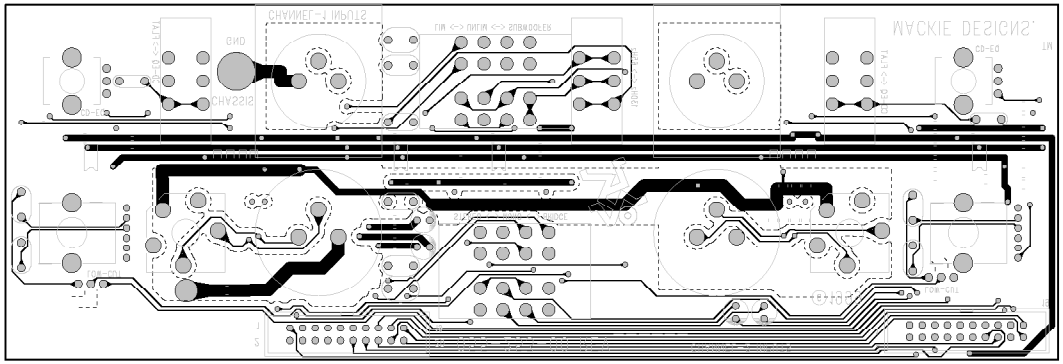

Solder side
traces and pads

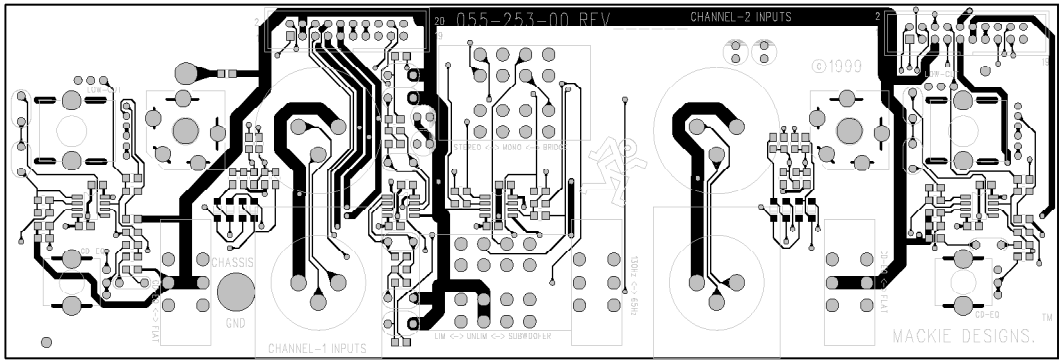

Component side
traces and pads

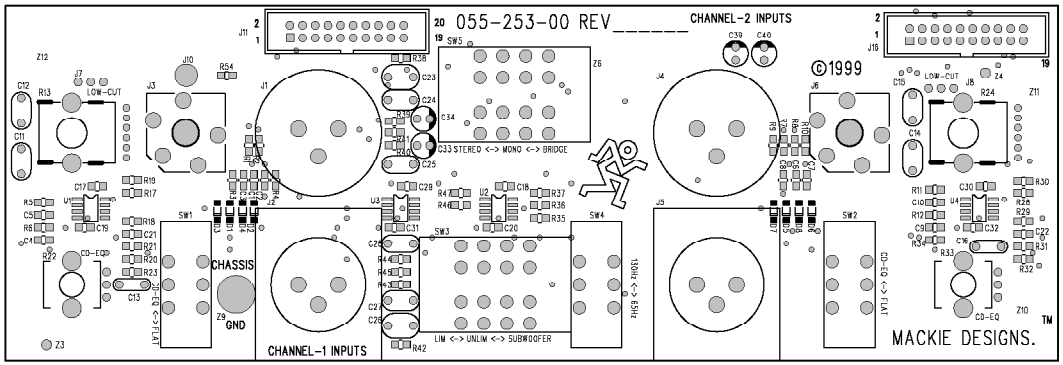

Component side

DWG NO	SHT	REV
990-162-00	1	A

ECO#	REV:	DESCRIPTION	REV. BY:	APP. BY:	DATE

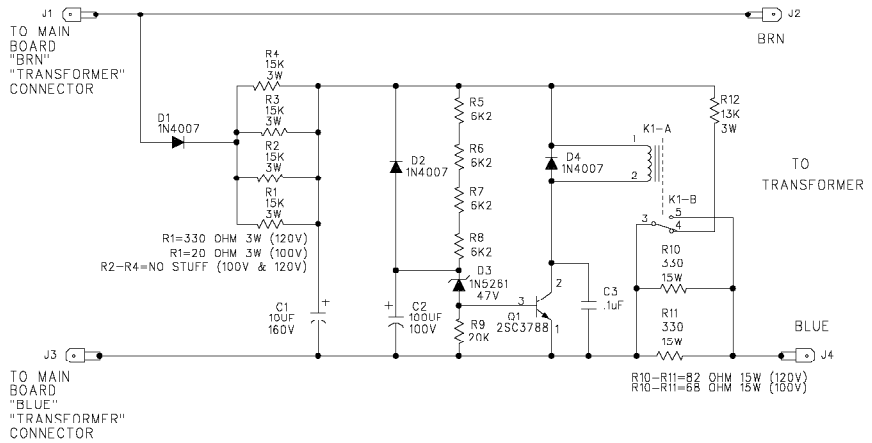

NOTE: SCHEMATIC IS SHOWN WITH 240VAC VALUES

- ☐ **NO STUFF R2-R4 FOR 100VAC OR 120VAC VERSIONS** XXX
- ☐ **REPLACES R10-R11 FOR 120VAC VERSION** 82 15W
- ☐ **REPLACES R1 FOR 120VAC VERSION** 330 3W
- ☐ **REPLACES R10-R11 FOR 100VAC VERSION** 68 15W
- ☐ **REPLACES R1 FOR 100VAC VERSION** 20 3W
- ☐ PCB, M-1200/M-1400 SOFT START

Solder side

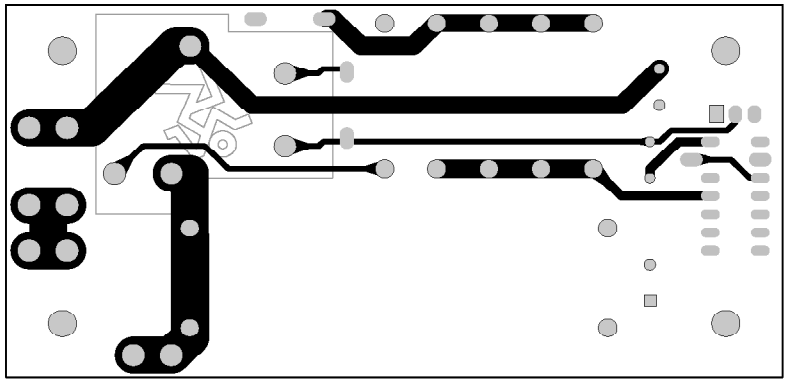

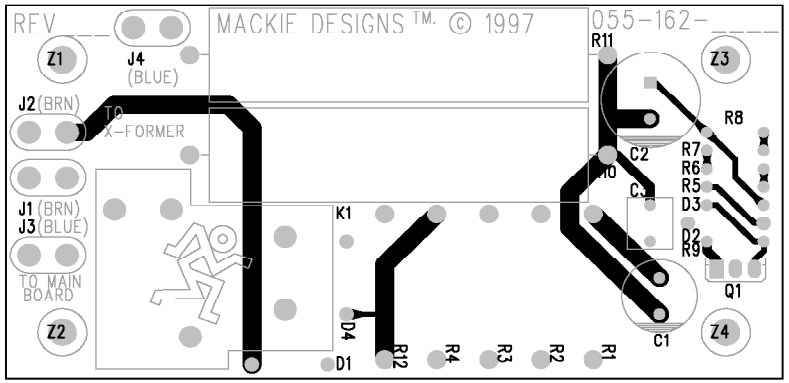

Component side

UNLESS OTHERWISE SPECIFIED DIMENSIONS ARE IN INCHES TOLERANCES ARE: FRACTIONS: ±NA DECIMALS: .XX ±.01 .XXX ±.005 ANGLES: ±NA	APPROVALS	DATE
	DRAWN: Chuck J	4-15-97
	CHECKED:	
	NP ENG: Cameron Jones	4-25-97
MATERIAL: SEE NOTES	MATERIAL:	
	MFG:	
FINISH: SEE NOTES	MFG ENG:	
DO NOT SCALE DRAWING	ISSUED:	

MACKIE.
Mackie Designs Inc. Woodinville, Wa.

SCHEMATIC, M1400 SOFT START

SIZE	SCALE:	DWG. NO.	REV.
D	NONE	990-162-00	A

DWG FILE: SHEET 1 OF 1

PARTS LIST

Parts Numbering guide

040-	Cables
055-	Finished PCB Assy
100-	Pots and resistors
200-	Capacitors
300-	Semiconductors
400-	Jacks/Connectors
500-	Switches
510-	Fuses
550-	Chassis Metalwork
600-	Transformers
601-	Inductors
610-	Wires and Cables
640-	AC line cords
700-	Hardware
760-	Knobs/Plastic
770-	Fans
790-	Misc./Packing
800-	Printed Material
860-	EPROM

PART#	DESCRIPTION	PAGES
090-137-XX	M1400 assembly	A-2
080-149-00	Heatsink subassembly	A-3
090-134-00	M1400i assembly	A-4
080-143-00	Heatsink subassembly	A-5
055-253-00	Input board	A-6
055-254-00	Display board	A-7
055-255-00	Amplifier board	A-8
055-162-00	Soft Start board	A-11

⚠ Components noted with this symbol shall be replaced only by the component specified. This is required to maintain product safety.

Master Parts List 090-137-XX M1400 series II

Part #	Description	Rev	Qty	
090-137-00	M1400 SERIES II 120V	A6 A2	1	
090-137-01	M1400 SERIES II 230V	A6 A2	1	
090-137-02	M1400 SERIES II 100V	A6 A2	1	
⚠ 040-359-00	RIB 28GA 20C 4.25IN PLZD	C	1	
⚠ 040-360-00	RIB 28GA 20C 18IN PLZD	C	1	
⚠ 055-162-01	PCB ASSY SOFT START 240V	A1	1	FOR 240VAC VERSION. SEE PAGE 11
⚠ 055-162-02	PCB ASSY SOFT START 100V	A1	1	FOR 100VAC VERSION. SEE PAGE 11
⚠ 055-253-00-01	PCB ASSY INPUT	A2 A2	1	SEE PAGE 6
⚠ 055-254-00-01	PCB ASSY DISPLAY	A2 A2	1	SEE PAGE 7
⚠ 080-035-00	PWR SW HARNESS - AMP	A	1	
⚠ 080-149-00	SA HTSK M1400 SERIES II	A6 A2	1	
⚠ 080-154-00	SA XFMR 120V 1400/1400 I	A1 A1	1	FOR 120VACVERSION
⚠ 080-154-01	SA XFMR 230V 1400/1400 I	A1 A1	1	FOR 230VACVERSION
⚠ 080-154-02	SA XFMR 100V 1400/1400 I	A1 A1	1	FOR 100VACVERSION
⚠ 500-022-00	SWITCH, ROCKER ILLUMINATED	A	1	
⚠ 510-017-00	FUSE SB 20A 3AB 1/4X1-1/4	A	1	FOR 120VAC AND 100VAC VERSIONS
⚠ 510-023-00	FUSE SB 8A 3AB 1/4X1-1/4	A	1	FOR 230VACVERSION
550-247-00	SHIELD INPUT - M1200	A	1	
550-249-00	PLATE XFMR .335IDX4.528OD	A	AR	
550-294-00	BRACKET FOR SOFT START	A	1	FOR 230VAC AND 100VAC VERSIONS
550-470-00	PNT CHASSIS M1400-PRO	A	1	
550-564-00	PNT TOP COVER M1400-I-PRO	A	1	
550-566-00	PNT SIDE RIGHT M1400-I-PR	A	1	
550-568-00	PNT LEFT SIDE M1400-I-PRO	A	1	
551-029-10	EXTR SCRN DSPLY BZL-M1400	D	1	
⚠ 640-006-00	LC 15A 125V SJT 14GA 6FT7	D	1	LINECORD FOR 120VACVERSION
⚠ 640-007-02	LC EXPORT - JAPANESE	D	1	LINECORD FOR 100VACVERSION
⚠ 640-007-01	LC EXPORT - EUROPEAN	D	1	LINECORD FOR 230VACVERSION
700-011-00	MCH 4-40X1/4 BTNSKT BLKOX	A	6	
700-028-01	SEMS 6-32X5/16 PHP BLKZC	B	36	
700-041-04	MCH 6-32X3/8 FL 100DG BLK	A	8	
700-050-04	MCH 6-32X3/8 FIL PH IL CLR	A	2	
700-085-03	SCR PHP M3X6 STL BLK ZC	A	4	
700-086-00	TF 6-32X3/8 FL 100DG BLK	A	3	
700-106-00	BOLT HEX 5/16X23/4 ZC GD5	A	1	
701-016-00	5-20X5/16 PHPII TYP B BLK	A	8	
701-022-01	#4X5/16 PHP II TYP B BLK	B	4	
705-001-00	KEPNUT 6-32	A	2	
705-019-00	NUT STOVFR LOCK 5/16X18	A	1	
710-002-00	WASHER-SPLD W/400-214-00	A	AR	
710-024-00	WASH FLAT 5/16 HARD (USS)	A	2	
730-016-00	LOCTITE 242	A	AR	
730-026-00	ADHESIVE RTV162	A	AR	
740-001-00	TYRAP 3-1/4L	A	2	
740-003-00	TYRAP 8IN BLK	A	2	
740-004-00	STRAIN RELIEF HEYCO 1244	A	1	
760-048-04	KNOB 9MM DARK GRAY	B	4	
760-061-00	KNOB VOLUME AMPS	A	2	
780-042-00	INSUL MYLAR INPUT SHIELD	A	1	
780-111-00	WASH RUB (W/TRANSFORMER)	A	2	
790-002-00	BAG POLY 12 X 18 2MIL	A	1	
790-022-00	POLY-SHEET 52CF X 26 4MIL	A	1	
800-160-00	BOX M1400 SER II	A	1	
800-161-00	M1400 BOX SLEEVE SER II	A	1	
810 056 00	INST TOP/BOTTOM AMP		2	
820-062-11	OWN MNL M1400	A	1	

⚠ Components noted with this symbol shall be replaced only by the component specified. This is required to maintain product safety.

Heatsink sub assy 080-149-00

Part #	Description	Rev	Qty	
080-149-00	SA HTSK M1400 SERIES II	A6 A2	1	
040-209-00	RIB 28GA 10C 11.5 PLZD	C	1	
⚠ 055-255-01-01	PCB ASSY MAIN M1400	A6 A2	1	SEE PAGE 8. THIS HAS SPEAKON OUTPUTS
⚠ 220-059-00	LYT 12000UF 20% 82V 35X60	A	4	NOTE THAT THIS IS 12,000 UF
400-083-00	2P .100X1 22GA END	B	1	
⚠ 410-003-00	INSL SILPAD K6 W/ADHESIVE	A	8.2	
⚠ 410-006-00	INSL SILPAD W/O ADHESIVE	B	1	
550-237-00	SPRING CLIP SUBSINK-M1200	A	2	
550-255-00	PIGGYBACK CLIP	A1	1	
550-467-00	BRKT SUBSINK M1400 PRO	A	2	
550-468-00	COWLING HTSINK M1400 PRO	A	1	
550-469-00	BRKT FAN M1400 PRO	A	1	
551-085-00	EXTR FAB HEATSINK M1400PR	A	1	
700-010-00	TF 6-32X1/4 PHP BLKZC	A	3	
700-010-04	TF 6-32X3/8 PHP BLKZC	A	8	
700-028-02	SEMS 6-32X3/8 PHP BLKZC	B	10	
700-087-00	TF 4-40X5/8 TORX 1/4 WASH	A	5	
700-088-00	TF 4-40X5/8 TORX 3/8 WASH	A	18	
700-122-00	SS-8-32X1/4 PHP PH BLK OX		4	
705-024-00	NUT 8-32 SMALL DIA	A	4	
710-013-00	WASH FLAT NO.6 FIBRE	A	4	
730-001-00	THERMAL JOINT COMPOUND	A	AR	
730-003-00	ADHESIVE INDSTRI 3M 4799	A	AR	
730-025-00	LOCTITE 222	A	AR	
730-026-00	ADHESIVE RTV162	A	AR	
⚠ 770-007-00	FAN 80MM 24VDC-PANASONIC	B	1	
780-136-00	FOAM INSL FAN M1400 II	A	1	

Master Parts List 090-134-00 M1400i series II, 120v

Part #	Description	Rev	Qty	
090-134-00	M1400-I SERIES II 120V	A6 A2	1	
⚠ 040-359-00	RIB 28GA 20C 4.25IN PLZD	C	1	
⚠ 040-360-00	RIB 28GA 20C 18IN PLZD	C	1	
⚠ 055-253-00-01	PCB ASSY INPUT	A2 A2	1	SEE PAGE 6
⚠ 055-254-00-01	PCB ASSY DISPLAY	A2 A2	1	SEE PAGE 7
⚠ 080-035-00	PWR SW HARNESS	A	1	
⚠ 080-143-00	SA HTSK M1400-I SERIES II	A6 A2	1	SEE PAGE 5
⚠ 080-154-00	SA XFMR 120V 1400/1400 I	A1 A1	1	
⚠ 500-022-00	SWITCH, ROCKER ILLUMINATED	A	1	
⚠ 510-017-00	FUSE SB 20A 3AB 1/4X1-1/4	A	1	
550-247-00	SHIELD INPUT - M1200	A	1	
550-249-00	PLATE XFMR .335IDX4.528OD	A	AR	
550-564-00	PNT TOP COVER M1400-I-PRO	A	1	
550-565-00	PNT CHASSIS M1400-I-PRO	A	1	
550-566-00	PNT SIDE RIGHT M1400-I-PR	A	1	
550-568-00	PNT LEFT SIDE M1400-I-PRO	A	1	
551-029-20	EXTR SCRN DSPL BZL M1400I	D	1	
⚠ 640-006-00	LC 15A 125V SJT 14GA 6FT7	D	1	LINECORD
700-011-00	MCH 4-40X1/4 BTNSKT BLKOX	A	6	
700-028-01	SEMS 6-32X5/16 PHP BLKZC	B	36	
700-041-04	MCH 6-32X3/8 FL 100DG BLK	A	7	
700-050-04	MCH 6-32X3/8 FH PHI CLR	A	2	
700-085-03	SCR PHP M3X6 STL BLK ZC	A	4	
700-086-00	TF 6-32X3/8 FL 100DG BLK	A	3	
700-106-00	BOLT HEX 5/16X23/4 ZC GD5	A	1	
701-016-00	5-20X5/16 PHPII TYP B BLK	A	8	
705-001-00	KEPNUT 6-32	A	2	
705-003-00	NUT HEX-SPLD W/400-214-00	A	AR	
705-015-00	NUT SLOT NCKL	A	2	
705-019-00	NUT STOVER LOCK 5/16X18	A	1	
710-002-00	WASHER-SPLD W/400-214-00	A	AR	
710-019-00	WASH FIBRE BLK	A	2	
710-024-00	WASH FLAT 5/16 HARD (USS)	A	2	
730-016-00	LOCTITE 242	A	AR	
730-026-00	ADHESIVE RTV162	A	AR	
740-001-00	TYRAP 3-1/4L	A	2	
740-003-00	TYRAP 8IN BLK	A	2	
740-004-00	STRAIN RELIEF HEYCO 1244	A	1	
750-001-00	BUMPON ROUND BLK .63X.31	A	4	
760-048-04	KNOB 9MM DARK GRAY	B	4	
760-061-00	KNOB VOLUME AMPS	A	2	
780-042-00	INSUL MYLAR INPUT SHIELD	A	1	
780-111-00	WASH RUB (W/TRANSFORMER)	A	2	
790-002-00	BAG POLY 12 X 18 2MIL	A	1	
790-022-00	POLY-SHEET 52CF X 26 4MIL	A	1	
800-158-00	BOX M1400-I SERIES II	A	1	
800-159-00	M1400I BOX SLEEVE SER II	A	1	
810-056-00	INST TOP/BOTTOM - AMP		2	
820-062-14	OWN MANUAL M1400I ENGDOM	A	1	

Components noted with this symbol shall be replaced only by the component specified. This is required to maintain product safety.

Heatsink sub assy 080-143-00

Part #	Description	Rev	Qty	
080-143-00	SA HTSK M1400-I SERIES II	A6 A2	1	
040-209-00	RIB 28GA 10C 11.5 PLZD	C	1	
⚠ 055-255-02-01	PCB ASSY MAIN M1400-I	A6 A2	1	SEE PAGE 8. THIS HAS 1/4" OUTPUTS
⚠ 220-058-00	LYT 10000UF 20% 82V 35X60	A	4	NOTE THAT THIS IS 10,000 UF
400-083-00	2P .100X1 22GA END	B	1	
⚠ 410-003-00	INSL SILPAD K6 W/ADHESIVE	A	8.2	
⚠ 410-006-00	INSL SILPAD W/O ADHESIVE	B	1	
550-237-00	SPRING CLIP SUBSINK-M1200	A	2	
550-255-00	PIGGYBACK CLIP	A1	1	
550-467-00	BRKT SUBSINK M1400 PRO	A	2	
550-468-00	COWLING HTSINK M1400 PRO	A	1	
550-469-00	BRKT FAN M1400 PRO	A	1	
551-085-00	EXTR FAB HEATSINK M1400PR	A	1	
700-010-00	TF 6-32X1/4 PHP BLKZC	A	3	
700-010-04	TF 6-32X3/8 PHP BLKZC	A	8	
700-028-02	SEMS 6-32X3/8 PHP BLKZC	B	10	
700-087-00	TF 4-40X5/8 TORX 1/4 WASH	A	5	
700-088-00	TF 4-40X5/8 TORX 3/8 WASH	A	18	
700-122-00	SS-8-32X1/4 PHP PH BLK OX		4	
705-024-00	NUT 8-32 SMALL DIA	A	4	
710-013-00	WASH FLAT NO.6 FIBRE	A	4	
730-001-00	THERMAL JOINT COMPOUND	A	AR	
730-003-00	ADHESIVE INDSTRL 3M 4799	A	AR	
730-025-00	LOCTITE 222	A	AR	
730-026-00	ADHESIVE RTV162	A	AR	
⚠ 770-007-00	FAN 80MM 24VDC-PANASONIC	B	1	
780-136-00	FOAM INSL FAN M1400 II	A	1	

⚠ Components noted with this symbol shall be replaced only by the component specified. This is required to maintain product safety.

055-253-00 Rev A Input board

Part #	Description	Value		Reference
040-136-00	DIS 18GA 1007 BLK 5 QDTRM			J10
130-037-02	RESISTOR POT 9MM HORIZ	10K C		R22 R33
130-062-02	POT 50KC 12MM DUAL WO SLV	50KC		R13 R24
140-025-00	RESISTOR CF	10	5%	R54
140-078-00	RES TF SM .1W 5% 1K6 OHM	1K6	5%	R19-20 R30-31
140-082-00	RES TF SM .1W 5% 2K4 OHM	2K4	5%	R18 R29
140-087-00	RESISTOR CF	3K9	5%	R38
140-089-00	RESISTOR CF	4K7	5%	R21 R32 R35-37 R46-47
140-095-00	RES TF SM .1W 5% 8K2 OHM	8K2	5%	R17 R28
140-108-00	RESISTOR CF	27K	5%	R45
140-115-00	RESISTOR CF	51K	5%	R41 R43-44
140-123-00	RESISTOR CF	100K	5%	R39-40
140-147-00	RESISTOR CF	1M	5%	R23 R34
145-318-00	RES MF SM .1W 1% 2K00 OHM	2K00	1%	R1-2 R7-8 R42
145-389-00	RESISTOR MF	10K0	1%	R3-4 R9-10
145-397-00	RESISTOR MF	12K1	1%	R5-6 R11-12
200-001-02	CAPACITOR MYLAR T&R	0.012		C25 C28
200-004-02	CAPACITOR MYLAR T&R	0.047	10%	C24 C27
200-015-02	CAPACITOR MYLAR T&R	0.0047		C13 C16
200-022-02	CAPACITOR MYLAR TAPE	0.47	10%	C23 C26
200-025-02	CAPACITOR MYLAR T&R	0.56		C11-12 C14-15
212-001-00	CAPACITOR CERAMIC SMT	0.01	10%	C17-20 C29-32
212-004-00	CAPACITOR CERAMIC SMT	220PF	5%	C1-3 C6-8 C21-22
212-009-00	CAPACITOR CERAMIC SMT	47PF	5%	C4-5 C9-10
220-001-02	LYT 22UF 20% 25V RAD TR	22UF	10%	C33-34 C39-40
300-003-00	DIODE SIGNAL SMD	DL4148		D1-8
320-012-00	OPAMP NJM4560M	NJM4560M		U1-4
400-041-00	XLR VERT MALE PCMNT			J2 J5
400-214-00	JACK 1/4 V PCMNT 1MM WASH			J3 J6
400-223-00	XLR PCMNT NEUTRIK-AP SER FEMALE			J1 J4
400-341-20	HDR 20P .10X2 STR LCK			J11 J16
450-253-00	PCB INPUT M-1400-S2			Z3
500-023-00	SWITCH	4P3T		SW3 SW5
500-024-00	SWITCH SLIDE VERT PC MTG	DPDT		SW1 2 SW4

Components noted with this symbol shall be replaced only by the component specified. This is required to maintain product safety.

055-254-00 Rev A Display board

Part #	Description	Value		Reference
130-070-00	POT RTY 5K LIN 9MM 21DET	5KB	20%	R2 R32
140-057-00	RESISTOR CF	220	5%	R11
140-068-00	RES TF SM .1W 5% 620 OHM	620	5%	R9 R20
140-073-00	RES TF SM .1W 5% 1K0 OHM	1K0	5%	R33 R38
140-076-00	RESISTOR CF	1K3	5%	R25 R45-48 R50-52 R54
140-081-00	RESISTOR CF	2K2	5%	R1 R31
140-083-00	RES TF SM .1W 5% 2K7 OHM	2K7	5%	R10 R16-19 R49 R53
140-087-00	RESISTOR CF	3K9	5%	R14
140-092-00	RESISTOR CF	6K2	5%	R13
140-094-00	RESISTOR CF	7K5	5%	R15
140-097-00	RESISTOR CF	10K	5%	R29 R43-44
140-106-00	RESISTOR CF	24K	5%	R8 R28
140-111-00	RESISTOR CF	36K	5%	R41-42
140-124-00	RESISTOR CF	120K	5%	R12
140-139-00	RESISTOR CF	470K	5%	R4 R7 R27 R30
145-406-00	RESISTOR MF	15K0	1%	R5 R22 R24
145-469-00	RESISTOR MF	68K1	1%	R6 R23
145-478-00	RESISTOR MF	84K5	1%	R21
145-485-00	RESISTOR MF	100K	1%	R3 R26 R35 R37 R39 40
145-547-00	RESISTOR MF	442K	1%	R34 R36
212-001-00	CAPACITOR CERAMIC SMT	0.01	10%	C4-6 C10-11 C13 C19-20 C22-23
212-010-00	CAPACITOR CERAMIC SMT	.1UF	-400	C7-9 C12 C14-16 C24-25
220-002-02	CAPACITOR LYTIC RADIAL TAPE	47UF	10%	C3 C17
220-008-02	LYT 1UF 20% 50V RAD TR	1UF	10%	C18 C21
220-027-02	CAPACITOR LYTIC RADIAL	10UF	10%	C1-2
300-003-00	DIODE SIGNAL SMD	DL4148		D13-17 D21-23 D27
⚠ 304-070-02	LED RED T1 W/.550 SPCR T/	R RED		D1 D7 D18-19 D24-26
⚠ 304-071-02	LED GRN T1 W/.550 SPCR T/	R GRN		D2-6 D8-12 D20
311-002-00	X-SISTOR PNP SMD	IMBT4403		Q1-2
320-012-00	OPAMP NJM4560M	NJM4560M		U1 U6
323-002-00	I.C. QUAD COMPARATOR SMD	LM339		U2-5 U7
400-077-00	HDR 20P .1X2 STR LCK SHRD			J1
450-254-00	PCB, DISPLAY, M1400 S2			Z10
706-033-08	STDF SWAGE NO.4 X .665			M1-6

Components noted with this symbol shall be replaced only by the component specified. This is required to maintain product safety.

055-255-xx Rev A Amplifier board

Part #	Description	Value		Reference
040-135-00	CABLE ASSY, 18AWG, GN/YW, 4"			J38
100-001-00	RESISTOR CF	10	5%	R57 R72 R75 R89
100-017-00	RESISTOR CF	47	5%	R60 R69 R78 R86 R208 R213
100-023-00	RESISTOR CF	82	5%	R58 R61 R67 R70 R76 R79 R84 R87
100-027-00	RESISTOR CF	120	5%	R113
100-030-00	RESISTOR CF	160	5%	R97-100 R122 R134-136
100-031-00	RESISTOR CF	180	5%	R106 R116 R124 R132
100-040-00	RES CF .125W 5% 430 OHM	430	5%	R28 R37 R65 R83 R187
100-042-00	RES CF .125W 5% 510 OHM	510	5%	R23 R29 R33 R36 R229
100-049-00	RES CF .125W 5% 1K OHM	1K	5%	R209 R212
100-050-00	RESISTOR CF	1K1	5%	R143
100-051-00	RES CF .125W 5% 1K2 OHM	1.2K	5%	R64 R82
100-056-00	RESISTOR CF	2K	5%	R146 R157 R168 R171 R180
100-061-00	RESISTOR CF	3K3	5%	R142 R193-194 R214-215
100-071-00	RESISTOR CF	8K2	5%	R144
100-072-00	RESISTOR CF	9.1K	5%	R158
100-073-00	RESISTOR CF	10K	5%	R26 R30 R32 R35 R114 R127 R147-148 R155 R163-164 R167 R173 R176 R184 R190 R211 R220 R222-223 R227 R230-233
100-076-00	RES CF .125W 5% 13K OHM	13K	5%	R221
100-080-00	RESISTOR CF	20K	5%	R110 R152 R160 R169-170 R235
100-082-00	RESISTOR CF	24K	5%	R156
100-083-00	RESISTOR CF	27K	5%	R181
100-084-00	RESISTOR CF	30K	5%	R63 R66 R81 R90
100-086-00	RESISTOR CF	36K	5%	R112 R145 R159 R178 R197-198 R226
100-089-00	RES CF .125W 5% 47K OHM	47K	5%	R3-4 R31 R34 R108
100-092-00	RESISTOR CF	62K	5%	R139 R199-200 R203
100-093-00	RESISTOR CF	68K	5%	R140
100-094-00	RESISTOR CF	75K	5%	R234
100-097-00	RESISTOR CF	100K	5%	R111 R151 R153 R161-162 R172 R174-175 R183 R185-186 R210
100-109-00	RESISTOR CF	1M	5%	R109
100-110-00	RESISTOR CF	360K	5%	R195-196 R228
100-111-00	RESISTOR CF	390K	5%	R141
105-277-00	RESISTOR MF	750	1%	R120 R129
105-331-00	RESISTOR MF	2K49	1%	R56 R59 R62 R68 R71 R74 R77 R80 R85 R88 R105 R107 R115 R117 R119 R123 R125 R128 R131 R133 R154 R165-166 R177
110-065-00	RES CF .25W 5% 4K7 OHM	4K7	5%	R216-219
115-427-00	RESISTOR CF	24K9	1%	R118 R121 R126 R130
121-097-00	RESISTOR MOF	10K	5%	R225
123-009-00	RESISTOR MOF	0.22	5%	R38-49 R51-54
123-033-00	RESISTOR MOF	2.2	5%	R101-104 R137-138
123 056 00	RESISTOR MOF	20	5%	R149 150
123-071-00	RESISTOR MOF	82	5%	R207
123-109-00	RESISTOR MOF	3.3K	5%	R206 R224
130-038-00	RESISTOR POT TRIM HORIZ	500-B		R24 R27
⚠ 150-009-00	RESISTOR, FUSABLE, 1/4W	2.2	5%	R1-2 R5-7 R9-12 R14-18 R20-22 R50 R92 R94
⚠ 150-025-00	RES FUS .25W 5% 10 OHM	10	5%	R204-205
⚠ 150-037-00	RESISTOR, FUSABLE, 1/4W	33	5%	R13 R25 R55 R73 R91 R93 R95-96
⚠ 150-045-00	RESISTOR, FUSABLE, 1/4W	68	5%	R8 R19
⚠ 150-066-00	RESISTOR, FUSABLE, 1/4W	510	5%	R179 R182 R188-189
⚠ 150-080-00	RESISTOR, FUSABLE, 1/4W	2K	5%	R191-192 R201-202
200-007-02	CAPACITOR MYLAR T&R	0.01		C1-2 C29-30 C66 C73

⚠ Components noted with this symbol shall be replaced only by the component specified. This is required to maintain product safety.

Part #	Description	Value	Reference
200-023-00	CAPACITOR, POLY BOX	1000pF 20%	C77 C84
200-024-00	CAPACITOR, POLY BOX	.01uF 20%	C49 C53-54
200-036-00	CAPACITOR, METALIZED POLY	.1uF 10%	C19 C26-28
200-044-02	PLY FILM 270PF 5% 630V TR	270pF 5%	C21-23 C25
210-001-02	CAPACITOR CERAMIC TAPE	0.01 10%	C8-9 C15-17 C24 C51-52 C56-63
210-010-02	CAPACITOR, CERAMIC, T/R	47pF 5%/NPO	C37 C40
210-017-02	CAPACITOR, CERAMIC, T/R	470pF 5%/Y5E	C32 C34 C36 C38-39 C41
211-003-00	CAPACITOR CERAMIC AXIAL	0.001 10%	C6 C10 C18 C20
211-009-00	CAPACITOR CERAMIC AXIAL	0.1 10%	C3-4 C48 C64 C71-72 C75 C81-82
220-002-02	CAPACITOR LYTIC RADIAL TAPE	47UF 10%	C74
220-004-02	CAPACITOR LYTIC RADIAL TAPE	470UF 10%	C42-43
220-011-02	CAPACITOR LYTIC RADIAL T&R	100UF 10%	C83
220-016-00	LYT 1000UF 20% 25V RAD	1000UF 10%	C11 C14
220-025-00	CAPACITOR LYTIC RADIAL	1,000UF 10%	C76
220-027-02	CAPACITOR LYTIC RADIAL TAPE	10UF 10%	C5 C7 C31 C33 C35 C44 C47 C50 C55 C65 C67-70
220-034-00	CAPACITOR LYTIC RADIAL	0.47UF 20%	C79
220-049-02	LYT 100UF 10V 20% RAD BIP	100uF 20%	C78 C80
300-001-00	DIODE SIGNAL	1N4148	D3-12 D16-17 D21-23 D25 D27-29 D32 D39-58 D61-69 D74-84 D87 D90 D92-93 D98-99
300-007-00	DIODE SIGNAL, 220V, LOW CAPACITANCE	1SS244	D24 D30-31 D33 D37-38 D59-60 D70-73 D85-86 D89
301-007-00	DIODE, POWER, DUAL, COMMON CATHODE	SF304 200V	D1
301-008-00	DIODE, POWER, DUAL, COMMON ANODE	SF304A 200V	D2
301-009-00	DIODE POWER	1N4004	D19-20 D26 D34-36 D95-96
301-010-00	DIODE POWER	1N5404	D13-15 D18
⚠ 301-017-00	THY MBS4992	MBS4992	Q93 Q95
⚠ 301-026-00	TRIAC 200V 40A	MAC224A4	Q83 Q88
302-003-00	DIODE ZENER	1N4745	D88 D91 D94 D97
310-002-00	TRANSISTOR PNP	2N4403	Q19 Q22 Q70 Q72-76 Q84 Q87
310-007-00	TRANSISTOR NPN	2N4401	Q20-21 Q78 Q80 Q85-86 Q94
310-023-02	TRANSISTOR NPN T&R	2SC2362K	Q43-44 Q47-48 Q53-54 Q57-58 Q61-62 Q65-66 Q77 Q79
310-028-00	TRANSISTOR PNP	2SB940A	Q89
310-029-00	TRANSISTOR NPN	2SD1264A	Q90-91
310-032-02	TRANSISTOR PNP T&R	2SA1016K	Q41-42 Q45-46 Q55-56 Q59-60 Q63-64 Q67-68
310-033-00	TRANSISTOR PNP	MJL21193	Q6-9 Q14-17
310-034-00	TRANSISTOR NPN	MJL21194	Q2-5 Q10-13
310-035-00	TRANSISTOR PNP	2SA1478	Q25-26 Q30 Q34-35 Q39 Q69 Q71 Q81-82
310-036-00	TRANSISTOR NPN	2SC3788	Q24 Q28-29 Q33 Q37-38 Q92
310-037-00	XSTR NPN MJE340 POWER	MJE340	Q50 Q52
310-038-00	XSTR PNP MJE350	MJE350	Q49 Q51
310-042-00	TRANSISTOR NPN	MJE15032	Q23 Q32
310-043-00	TRANSISTOR PNP	MJE15033	Q31 Q40
310-049-00	XSTR PNP 2SA794A	2SA794A	Q1 Q18
310-050-00	XSTR NPN 2SC1567A	2SC1567A	Q27 Q36
323-001-00	I.C. QUAD COMTR THRU HOLE	LM339	U2 U5-6
⚠ 329-012-00	OPTO-ISOLATOR,LED/CDS	VTL5C10	U3-4
⚠ 329-014-00	IC, DEG C TEMPERATURE SENSOR	LM35DZ	U1
⚠ 400-060-00	FUSE CLIP PC MT 5mm DIA		Z1-7 Z9
400-061-00	CONNECTOR HDR STR 2P .100 X 1		J41
⚠ 400-129-00	FUSE CLIP PC MT .25" DIA		Z8 Z10

⚠ Components noted with this symbol shall be replaced only by the component specified. This is required to maintain product safety.

..amplifier continued

Part #	Description	Value		Reference	
400-133-00	HEADER, 2X3, MATE-N-LOCK	11A	600V	J1	
400-143-00	CONN, HDR, 3-PIN, UN-SHROUDED, 0 .100			J20 J37	
400-166-00	CONNECTOR JACK 1/4" TRS HORIZ, PC MNT			J43 J45	(M-1400i ONLY)
400-171-00	CONN, HDR, 2-PIN, UN-SHROUDED,0 .100			J2-3	
400-173-00	CONN QUICK DISC .250 W/STABLE-LOK TABS			J4-5 J26 J31-36	
400-237-00	BANANA QUAD HORIZ PCMT			J44	
400-341-10	HDR 10P .10X2 STR LCK			J28 J39	
400-341-20	HDR 20P .10X2 STR LCK			J27	
400-353-00	SPEAKONS HORIZ 4 CKT NLM4MD-H-2-NG			J42 J46	(M-1400 ONLY)
⚠ 450-255-00	PCB, MAIN M-1400-S2			Z77	
⚠ 510-021-00	FUSE 5X20	F-10A		F2-5	
⚠ 601-006-00	INDUCTOR, AIR CORE	1uH	10%	L1-2	
660-005-00	Jumper, Uninsulated, 22AWG, 0.400"		ZERO	W1-28	

⚠ Components noted with this symbol shall be replaced only by the component specified. This is required to maintain product safety.

055-162-xx Rev A Soft Start board

Part #	Description	Value			Reference	
⚠ 055-162-01	PCB ASSY SOFT START 240V	A1			FOR 240VAC	
⚠ 055-162-02	PCB ASSY SOFT START 100V	A1			FOR 100VAC	
100-068-00	RESISTOR CF	6K2	.125W	5%	R5-8	
100-080-00	RESISTOR CF	20K	.125W	5%	R9	
123-124-00	RESISTOR MOF	13K	3W	5%	R12	
123-125-00	RESISTOR MOF	15K	3W	5%	R1-4	FOR 240VAC VERSION
123-056-00	RESISTOR MOF	20	3W	5%	R1	FOR 100VAC VERSION
123-085-00	RESISTOR MOF	330	3W	5%	R1	FOR 120VAC VERSION
NOTE: R2-R4 NOT USED IN 100VAC OR 120VAC VERSIONS)						
125-019-00	RESISTOR WW	68	15W	5%	R10-11	FOR 100VAC VERSION
125-020-00	RESISTOR WW	82	15W	5%	R10-11	FOR 120VAC VERSION
125-021-00	RESISTOR WW	330	15W	5%	R10-11	FOR 240VAC VERSION
200-036-00	CAPACITOR, METALIZED POLY	.1uF	250V	10%	C3	
220-007-00	CAPACITOR LYTIC RADIAL	100UF	100V	10%	C2	
220-040-00	CAPACITOR LYTIC RADIAL	10UF	160V	20%	C1	
⚠ 301-014-00	DIODE POWER	1N4007	1000V		D1-2 D4	
⚠ 302-001-00	DIODE ZENER	1N5261	47V		D3	
⚠ 310-036-00	TRANSISTOR NPN	2SC3788			Q1	
400-059-00	CONN QUICK DISC 250				J1-4	
⚠ 450-162-00	PCB, M-1200/M-1400 SOFT START				Z12	
⚠ 501-002-00	RELAY SPDT 20AMP 110VDC				K1	