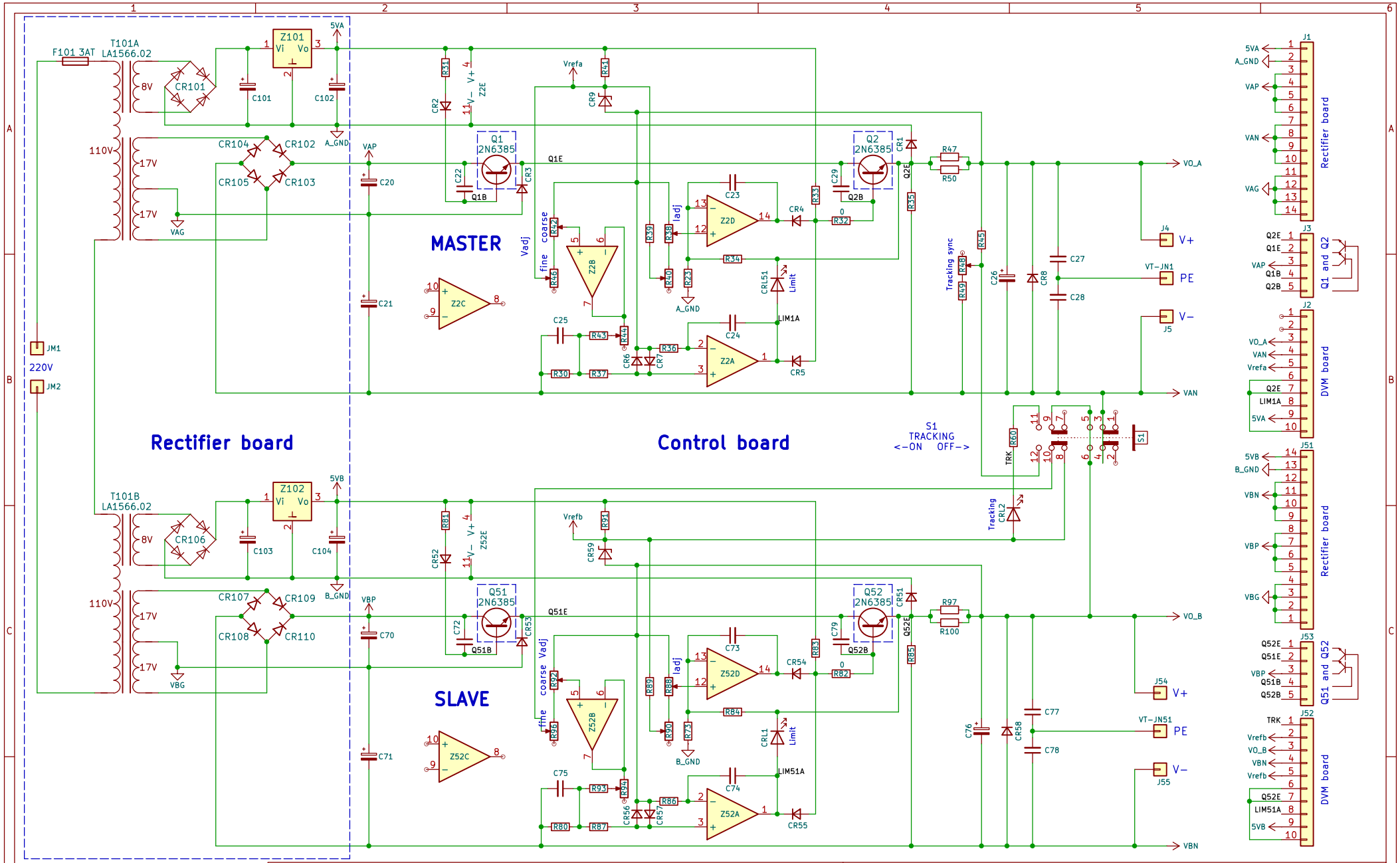

NOTE
Parts within dashed rectangles are EXCLUDED from the board layout.
These are only present for schematic readability.
- Rectifier part (board layout - see AX322_Rectifier.kicad_xxx).
- Q1, Q2, Q51 and Q52 (These are wired to J3 and J53).

Sheet: /
File: AX322_Control.kicad_sch

Title: METRIX AX322C Dual power supply - Control board

Size: A4	Date:	Rev: 1.0
KiCad E.D.A. 9.0.0		Id: 1/1