CALIBRATION AND SERVICING HANDBOOK

for

THE DATRON AUTOCAL 1071 DIGITAL VOLTMETER

(for operating procedures refer to the User's Handbook)

850046 **Issue 7 (SEPT. 86)**

For any assistance contact your nearest Datron Sales and Service center.
Addresses can be found at the back of this handbook.

Due to our policy of continuously updating our products, this handbook may contain minor differences in specification, components and circuit design to the instrument actually supplied. Amendment sheets precisely matched to your instrument serial number are available on request.

© 1986 Datron Instruments

CONTENTS

GENERAL DESCRIPTION	Refer to User's Handbook
INSTALLATION	
MEASUREMENT PROCEDURES	
SPECIFICATION AND SPECIFICATION VERIFICATION	
SYSTEMS APPLICATIONS	

Section	Title	Page
1	CALIBRATION	1
1.1	INTRODUCTION	1
1.1.1	General	1
1.1.2	Essentials for Good Calibration	1
1.1.3	The 'AUTOCAL' Process	1
1.2	DC VOLTAGE CALIBRATION	2
1.3	OHMS CALIBRATION	4
1.4	AC VOLTAGE CALIBRATION	6
1.5	DC CURRENT CALIBRATION	8
1.6	AC CURRENT CALIBRATION	9
1.7	'AUTOCAL' USING 'KEYBOARD'	10
1.8	'AUTOCAL' OVER THE BUS	11
2	MECHANICAL DESCRIPTION	13
2.1	GENERAL	13
2.2	FRONT PANEL	13
2.3	REAR PANEL	13
2.4	EXTERNAL CONSTRUCTION	13
2.5	INTERNAL CONSTRUCTION	13
3	TECHNICAL DESCRIPTION	15
3.1	INTRODUCTION	15
3.2	ANALOG ASSEMBLY	15
3.2.1	Analog Interface	15
3.2.1.1	Introduction	15
3.2.1.2	Power-On	15
3.2.1.3	General Interface Update Sequence	17
3.2.1.4	Test	17
3.2.2	DC Isolator Section	17
3.2.2.1	Preamplifier Scaling	17
3.2.2.2	Preamplifier	20
3.2.2.3	DC Bootstrap	20
3.2.2.4	Filtering	21
3.2.2.5	Input Current Compensation	21
3.2.2.6	Test	22
3.2.3	Analog to Digital Conversion (Analog Section)	22
3.2.3.1	General Principles	22
3.2.3.2	A-D Input Control	22
3.2.3.3	Reference Voltages and Control Logic Power Supply	23
3.2.3.4	High Speed Buffer	23
3.2.3.5	Integrator	24

Section	Title	Page
	3.2.3.6 1st Null Detector	24
	3.2.3.7 2nd Null Detector	25
	3.2.3.8 Reset Period	26
3.3	AC ASSEMBLY	27
	3.3.1 General Principles	27
	3.3.2 Preamplifier and Scaling	27
	3.3.3 RMS Converter	28
	3.3.4 High Frequency Compensation	29
	3.3.5 Frequency Detection	29
	3.3.6 Test	29
3.4	OHMS ASSEMBLY	29
	3.4.1 Low Drift Voltage Follower	29
	3.4.2 Constant Current Source	30
	3.4.3 Test	31
3.5	CURRENT ASSEMBLY	31
	3.5.1 Current Measurements	31
	3.5.2 Test	32
3.6	REAR INPUT/RATIO INPUT	32
	3.6.1 General	32
	3.6.2 Front Panel/Rear Panel Input	32
	3.6.3 Ratio	32
	3.6.4 Test	32
3.7	ANALOG OUTPUT	32
	3.7.1 General	32
	3.7.2 Description	33
3.8	DIGITAL ASSEMBLY	33
	3.8.1 Processor and Memory	33
	3.8.1.1 Software Overview	34
	3.8.1.2 The Two-Phase Clock	35
	3.8.1.3 RAM/ROM Circuit	36
	3.8.2 CMOS Address Decode and Input/Output Circuits	36
	3.8.3 Analog to Digital Conversion (Digital Section)	39
	3.8.3.1 General Principle	39
	3.8.3.2 Preset Procedure	40
	3.8.3.3 A–D Measurement Sequence	41
	3.8.3.4 Master Clock	41
3.9	FRONT PCB ASSEMBLY	41
	3.9.1 Analog Input Signals	41
	3.9.2 Display Signals	42
	3.9.3 Keyboard Data Encode	42
	3.9.4 Keyboard LED Data Decode	43
3.10	DISPLAY DRIVER ASSEMBLY	43
	3.10.1 Write Mode	43
	3.10.2 Read Mode	44
3.11	IEEE DIGITAL INTERFACE	46
	3.11.1 RAM/ROM Circuit	46

Section	Title	Page
		46
3.12	REAR (POWER SUPPLY) PCB ASSEMBLY	46
3.12.1	General	46
3.12.2	180V Supply	47
3.12.3	5V Supply	47
3.12.4	±15V Supply	47
3.13	SELF TEST SEQUENCE	47
4	INTERNAL ADJUSTMENT PROCEDURES	51
4.1	CHANGING LINE VOLTAGE AND FREQUENCY	51
4.1.1	Changing Line Voltage	51
4.1.2	Changing Line Frequency	51
4.2	BATTERY REPLACEMENT	51
4.3	POST-REPAIR PROCEDURES	51
4.3.1	Basic DC Instrument	52
4.3.2	Ohms Assembly	53
4.3.3	AC Assembly	54
APPENDIX 1	ANALOG DATA LINE 'F.E.T.' PATTERNS	55
5	COMPONENT LISTS, BOARD LAYOUTS AND CIRCUIT DIAGRAMS	
	Front PCB Assembly	400294/430294
	Rear PCB Assembly	400295/430295
	Centre PCB Assembly	400296/430296
	Left Hand PCB Assembly	400297/430297
	Right Hand PCB Assembly	400298/430298
	Analog Assembly	400299/430299
	Digital Assembly	400300/430300
	Display Driver Assembly	400301/430301
	Ohms Assembly	400303/430303
	Current Assembly	400304/430304
	Ratio/Rear Input	400307/430307
	Analog Output	400308/430308
	Interconnection Diagram	430326
	Rear Input	400386/430386
	AC Assembly	400402/430402
	IEEE Interface Assembly	400427/430427

ILLUSTRATIONS AND TABLES

Figure	Title	Page
1.1	Zero Resistance Source Connections	4
2.1	Exploded View of Instrument	14
3.1	Printed Circuit Boards Block Diagram	15
3.2	Power-On Options Fitted Test	16
3.3	Analog Interface Sequence: Power-Up	16
3.4	Analog Interface Data Line Timing Diagram (Power-Up)	16
3.5	Analog Interface Sequence: Ohms Select	17
3.6	General Form of Analog Interface Update Timing Diagram	18
3.7	Simplified Diagram of DC Isolator	18
3.8	Simplified Diagram of Isolator Switching	19
3.9	Preamplifier Gain Circuits	20
3.10	Simplified DC Isolator Filtering Circuit	20
3.11	Simplified Diagram of Bias Current Compensation	21
3.12	Simplified Diagram of Analog Section of A-D Converter	21
3.13	Timing Diagram For Analog Section of A-D Converter	22
3.14	Multiplexer Control Line Signals	23
3.15	Positive Reference Circuitry	23
3.16	High Speed Buffer Circuitry	23
3.17	Integrator Circuit	24
3.18	1st Null Detector Circuitry	24
3.19	2nd Null Detector Circuitry	25
3.20	Diagram of Averaging Process	25
3.21	Simplified Diagram of A-D During Reset Period	26
3.22	Simplified Diagram of AC Assembly	26
3.23	Simplified Diagram of the AC Preamplifier Scaling	27
3.25	Block Diagram of RMS Conversion Technique	28
3.26	Simplified Diagram of AC High Frequency Compensation	28
3.27	Simplified Resistance Assembly	29
3.28	Simplified Diagram of Voltage Follower Circuit	30
3.29	Ohms Current Range Switching	30
3.30	Simplified Ω Current Switching	31
3.31	Use of Ohms Guard	31
3.32	Simplified Diagram of Current Assembly	32
3.33	Simplified Block Diagram of Digital Assembly	33
3.34	Job Scheduler	34
3.35	Two-Phase Clock Generation	35
3.36	Timing Diagram of Stretched Two-Phase Clock	36
3.37	Simplified Diagram of Memory Circuits	37
3.38	Start Up and Non-Volatile RAM Protection	38
3.39	CMOS Address Decoding	38
3.40	Simplified Diagram of Digital Section of A-D Converter	39
3.41	Flowchart of A-D Digital Section	40
3.42	A-D Analog Sequence Control Signals	40
3.43	Command Delays	40

Figure	Title	Page
3.44	CMOS Data Bus: Key Select Coding	42
3.45	CMOS Data Bus: LED Select Coding	42
3.46	Display Driver Write Circuitry	43
3.47	Display Driver Read Mode Address States	44
3.48	Simplified Display Driver Read Circuitry	45
3.49	Comma Display Read Circuitry	45
3.50	Simplified Diagram of IEEE Assembly	46
3.51	Line Transformer	47
3.52	Flowchart of Self Test Routine	49
4.1	Reference Selection Voltages	53
4.2	AC Board Output Selection Voltages	54

SECTION 1

CALIBRATION

1.1 INTRODUCTION

1.1.1 General

The purpose of calibration is to take account of any long-term drifts in the components of the instrument and to restore the accuracy, traceable to a known standard.

The period between calibrations depends upon the accuracy performance required from the instrument and for guidance, guaranteed accuracies for 24 hours, 90 days and 1 year are quoted.

The calibration procedures presented in the following pages should cater for most calibration situations. If, however, a special problem arises, please contact our Customer Service Section.

1.1.2 The Essentials for Good Calibration

Temperature - So that the instrument can meet its specification over the quoted temperature range, the temperature environment should be stabilised at 23°C ± 1°C. In addition, temperature gradients around the instrument should be considered, therefore calibrate the instrument in its normal operating position and allow plenty of room for ventilation.

Warm up - It is essential that the instrument has fully temperature stabilised if the best results from calibration are to be achieved. Therefore, at least a 2 hour warm-up period is recommended during which time the line supply or the covers should not be removed even for a short period. In addition, if the covers have been removed, make certain that they are correctly fitted and that the leaf contacts to the Earth and Guard Shields are in good shape.

Calibration Source - To perform a useful calibration the accuracy of the source should always be at least four times that of the instrument being calibrated. In most cases, examples of likely sources are given for each calibration function.

With some calibration sources, the output may take several seconds to settle to a final value, therefore unless a shorter settling time is assured, a period of 10 seconds is recommended before each calibration operation.

Guarding - It is preferable to arrange for the DVM to be calibrated with 'Local Guard' selected. Furthermore to arrange for the 'Lo' terminal of the DVM to remain at 'earth' throughout and let the calibration source float. If a 'Remote Guard' connection is necessary then examples are shown in the User's Handbook.

1.1.3 The 'AUTOCAL' Process

1.1.3.1 General

The Datron 'AUTOCAL' process means that complete calibration of AC, DC, Ohms and Current on every range can be carried out from the instruments own front panel. In the process, an internal non-volatile memory stores calibration constants for each function and range as determined when the instrument takes a series of 16 readings of the applied calibration source. Internally, each of the readings is deviated by one sixteenth of a digit and when an average is taken, the instrument is able to resolve to better than one least significant digit displayed.

Access to the non-volatile memory is gained using a key inserted into the rear panel. When calibration is complete, the key is removed, therefore preventing accidental or unauthorised use of the calibration routine.

1.1.3.2 Procedure Outline

- Select the 'FUNCTION' and 'RANGE' to be calibrated and cancel any 'MODE' or 'COMPUTE' keys.

- Cover the 'COMPUTE' keys with the stick-on 'CALIBRATE' overlay provided. Insert the key into the 'CALIBRATE ENABLE' keyswitch on the rear panel and turn to the 'CAL' position. (The 'cal' legend will be displayed on the front panel.)

If the instrument is fitted with Option 50 IEEE Bus, set the rear panel address switch to 31 i.e. all 1's.

- Connect the calibration source to the input terminals and operate the keys shown in the tables in the following pages. When a 'CALIBRATE' key is operated, its associated L.E.D. indicator will light and extinguish when the calibration operation is executed.

- When all calibration is complete turn the keyswitch to 'RUN' and remove the key.

1.1.3.3 The Five 'AUTOCAL' keys

'Zero' - This takes account of offsets in the instrument and in the calibration source.

'Gain' - This sets a scaling factor for each range and function.

'Ib' - This nulls the input bias current of the DC voltage measurement circuits to around 10pA. Therefore it only has a significant effect on the low DC voltage ranges and high resistance Ohms ranges. It can be operated as often as required and independently of other calibration operations. It will be seen that successive operations of 'Ib' approach the final nulled value of current iteratively.

AcHf - This flattens the response of the A.C. amplifier used for AC voltage measurement. It should only be used when a full calibration i.e. 'Zero', 'Gain' and 'AcHf' is carried out. As with 'Ib' the calibration action is iterative and requires several operations of the key to complete.

'Lin' - This is an important calibration operation as it optimises the basic linearity of the internal measurement circuitry used for all ranges and functions. It must be used before any DC voltage or Ohms calibration is carried out.

1.1.3.4 'AUTOCAL' using 'KEYBOARD'

This is an extension of the 'AUTOCAL' process which is useful when using a calibration source set to a nominal value but with known errors. This means for example that calibration directly to a standard cell is possible. A full explanation of the procedure is covered in section 1.7.

1.1.3.5 'AUTOCAL' over the Bus

Each of the five calibration operations can be controlled using Option 50, the IEEE bus. This means that the instrument can be entirely calibrated remotely or under program control. As mentioned in the 'Procedure Outline' for a manual calibration, the rear panel address switch should be set to 31, i.e. all 1's. When a bus calibration is required the address switch must be set to the address number assigned to the DVM in the system. More details of calibration with the bus are included in section 1.8.

1.1.3.6 'Error 4'

If during calibration 'Error 4' is displayed, this indicates that the Calibration Source deviates too far from the calibration span of the instrument. Under these circumstances, the calibration memory is not updated and the calibration LED remains on.

In the case of 'Zero', 'Gain' or 'AcHf' the Calibration Source should be checked and the same 'CALIBRATE' key depressed. The 'Hold' mode may be released any time and the instrument will free run again. If 'Error 4' follows 'Ib' or 'Lin' or persistently appears following 'Zero', 'Gain' or 'AcHf' then an instrument failure may have occurred. Therefore either consult our Customer Service Section or the Servicing Section of this Handbook.

1.2 DC VOLTAGE CALIBRATION

1.2.1 General

The procedure in the table opposite is all that is necessary to completely 'AUTOCAL' the DC voltage function. Steps 1 and 2 affect the accuracy on all ranges and should therefore be carried out even if just one range is being calibrated.

On each range a 'Zero' and 'Gain' calibration is required for each polarity of input. The two 'Zero' calibrations are included to overcome a possible zero difference with the polarity setting of the DC calibration source.

If the 'DVM Reading After Calibration' is not in accordance with the table, repeat operations of the same 'CALIBRATE' key is permissible to improve the reading.

1.2.2 Equipment Required

- 1MΩ 'Lin' Source. This is a 1MΩ 5% resistor in parallel with a 1nF capacitor, shielded to reduce noise interference.

- 10MΩ 'Ib' Source. This is a 10MΩ 5% resistor in parallel with a 1nF capacitor, shielded to reduce noise interference.

Datron products, number 400391 and 400392, are available as 'Lin' and 'Ib' sources and are recommended.

- A DC Calibration Source. e.g.:— Fluke 750A, with a 720, Standard Cell and a 343.

1.2.3 Checking Accuracy after 'AUTOCAL'

To check the accuracy after 'AUTOCAL' the 'Specification Verification' section of the User's Handbook will be useful; it provides tables for quick reference of accuracy on all ranges and functions in displayed digits.

DC VOLTAGE CALIBRATION

Step	Calibration Operation	Calibration Source Output	DVM Setting	'CALIBRATE' Key	DVM Reading After Calibration	Remarks
1	Linearity	1MΩ Lin Source	DC,10 Filter	'Lin'	<10 digits	This calibration step may take around 30 seconds to complete
2	Input Bias Current	10MΩ Ib Source	DC,1	'Ib'	<100 digits	Each subsequent operation of 'Ib' should approximately halve the DVM reading
3	10V Range Zero	+0.00000V	DC,10	'Zero'	±0.000,00V ±1 digit	
4	10V Positive Full Range	+10.00000V	DC,10	'Gain'	+10.000,00V ±1 digit	
5	10V Range Zero	−0.00000V	DC,10	'Zero'	±0.000,00V ±1 digit	
6	10V Negative Full Range	−10.00000V	DC,10	'Gain'	−10.000,00V ±1 digit	
7	1V Range Zero	+0.000000V	DC,1	'Zero'	±.000,000V ±1 digit	
8	1V Positive Full Range	+1.000000V	DC,1	'Gain'	+1.000,000V ±1 digit	
9	1V Range Zero	−0.000000V	DC,1	'Zero'	±.000,000V ±1 digit	
10	1V Negative Full Range	−1.000000V	DC,1	'Gain'	−1.000,000V ±1 digit	
11	.1V Range Zero	+0.0000mV	DC,.1	'Zero'	±0.000,0mV ±3 digits	Wait for the reading to stabilize before operating 'Zero'
12	.1V Positive Full Range	+100.0000mV	DC,.1	'Gain'	+100.000,0V ±3 digits	
13	.1V Range Zero	−0.0000mV	DC,.1	'Zero'	±0.000,0mV ±3 digits	Wait for the reading to stabilize before operating 'Zero'
14	.1V Negative Full Range	−100.0000mV	DC,.1	'Gain'	−100.000,0V ±3 digits	
15	100V Range Zero	+0.0000V	DC,100	'Zero'	±0.000,0V ±1 digit	
16	100V Positive Full Range	+100.0000V	DC,100	'Gain'	+100.000,0V ±1 digit	
17	100V Range Zero	−0.0000V	DC,100	'Zero'	±0.000,0V ±1 digit	
18	100V Negative Full Range	−100.0000V	DC,100	'Gain'	−100.000,0V ±1 digit	
19	1000V Range Zero	+0.000V	DC,1000	'Zero'	±0.000V ±1 digit	
20	1000V Positive Full Range	+1000.000V	DC,1000	'Gain'	+1,000.000V ±1 digit	⚡ Lethal voltages present - increase calibration source in 100V steps if possible
21	1000V Range Zero	−0.000V	DC,1000	'Zero'	±0.000V ±1 digit	
22	1000V Negative Full Range	−1000.000V	DC,1000	'Gain'	−1,000.000V ±1 digit	⚡ Lethal voltages present - increase calibration source in 100V steps if possible

1.3 OHMS CALIBRATION

1.3.1 General

The procedure in the table opposite is all that is necessary to completely 'AUTOCAL' the Ohms function. If just the Ohms or just one range of the Ohms is to be calibrated, then steps 1 and 2 in the DC Voltage Calibration table should be carried out first. Then on each Ohms range just a 'Zero' and 'Gain' calibration is required.

If the 'DVM Reading After Calibration' is not in accordance with the table, repeat operations of the same 'CALIBRATE' key is permissible to improve the readings.

1.3.2 'Zero' Resistance Source

For accurate 'Zero' calibration on Ohms it is ESSENTIAL that a correctly connected zero source is used. Two arrangements are necessary as shown in Fig. 1.1; it can be seen that '4 wire Ω' selection is recommended on all ranges.

1.3.3 Equipment Required

A set of resistance standards from 10Ω to 10MΩ in decades; it is essential that 10Ω to 100kΩ standards are 4 terminal devices.

1.3.4 Checking Accuracy after 'AUTOCAL'

To check the accuracy after 'AUTOCAL' the 'Specification Verification' section of the User's Handbook will be useful. It provides tables for quick reference of accuracy on all ranges and functions in displayed digits.

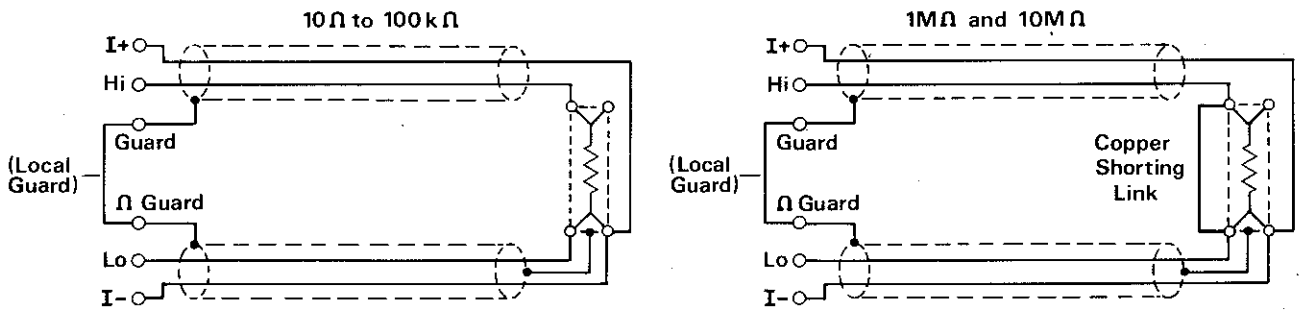

Fig. 1.1 ZERO RESISTANCE SOURCE CONNECTIONS

OHMS CALIBRATION TABLE

Step	Calibration Operation	Calibration Source	DVM Setting	'CALIBRATE' Key	DVM Reading After Calibration	Remarks
1	10Ω Range Zero	4 wire zero	kΩ, 4 wire, 10Ω	'Zero'	±0.000,00Ω ±5 digits	Wait for the reading to stabilize before operating 'Zero'
2	10Ω Full Range	10Ω [1] Standard Resistor	kΩ, 4 wire, 10Ω	'Gain'	10.000,00Ω ±5 digits	Wait for the reading to stabilize before operating 'Gain'
3	.1kΩ Range Zero	4 wire zero	kΩ, 4 wire, .1	'Zero'	±0.000,0Ω ±1 digit	
4	.1kΩ Full Range	100Ω [1] Standard Resistor	kΩ, 4 wire, .1	'Gain'	100.000,0Ω ±1 digit	
5	1kΩ Range Zero	4 wire zero	kΩ, 4 wire, 1	'Zero'	±.000,000kΩ ±1 digit	
6	1kΩ Full Range	1kΩ [1] Standard Resistor	kΩ, 4 wire, 1	'Gain'	1.000,000kΩ ±1 digit	
7	10kΩ Range Zero	4 wire zero	kΩ, 4 wire, 10	'Zero'	±0.000,00kΩ ±1 digit	
8	10kΩ Full Range	10kΩ [1] Standard Resistor	kΩ, 4 wire, 10	'Gain'	10.000,00kΩ ±1 digit	
9	100kΩ Range Zero	4 wire zero	kΩ, 4 wire, 100	'Zero'	±0.000,0kΩ ±1 digit	
10	100kΩ Full Range	100kΩ [1] Standard Resistor	kΩ, 4 wire, 100	'Gain'	100.000,0kΩ ±1 digit	
11	1000kΩ Range Zero	4 wire zero	kΩ, 4 wire, 1000, Input Filter	'Zero'	±0.000kΩ ±1 digit	
12	1000kΩ Full Range	1000kΩ [1] Standard Resistor	kΩ, 4 wire, 1000, Input Filter	'Gain'	1,000.000kΩ ±5 digits	
13	10MΩ Range Zero	4 wire zero	kΩ, 4 wire, 10MΩ, Input Filter	'Zero'	±0.000,00MΩ ±1 digit	
14	10MΩ Full Range	10MΩ [1] Standard Resistor	kΩ, 4 wire, 10MΩ, Input Filter	'Gain'	10.000,00MΩ ±25 digits	

[1] - With Standard Resistor sources it may be useful to use the 'KEYBOARD' method of calibration - see section 1.7

1.4 AC VOLTAGE CALIBRATION

1.4.1 General

The procedure in the table opposite is all that is necessary to completely 'AUTOCAL' the AC voltage function. On each range just a 'Zero', 'Gain' and 'AcHf' calibration is required.

If the 'DVM Reading After Calibration' is not in accordance with the table, repeat operation of the same 'CALIBRATE' key is permissible to improve the readings. This will be necessary with the AcHf key.

1.4.2 Equipment Required

A copper shorting link and an AC calibration source e.g. Fluke 5200A and 5215A.

1.4.3 Checking Accuracy after 'AUTOCAL'

To check the accuracy after 'AUTOCAL' the 'Specification Verification' section of the User's Handbook will be useful. It provides tables for quick reference of accuracy on all ranges and function in displayed digits.

AC VOLTAGE CALIBRATION TABLE

Step	Calibration Operation	Calibration Source Output	DVM Setting	'CALIBRATE' Key	DVM Reading After Calibration	Remarks
1	DC coupled AC Zero	Copper Shorting link	AC,DC,.1	'Zero'	0.000mV ±3 digits	Set 'Local Guard'. Do not set 'Input filter'. Wait for reading to stabilize before operating 'Zero'
2	.1V Range Zero	Copper Shorting link	AC,.1	Check only	<100 digits	
3	1V Range Zero	Copper Shorting link	AC,1	'Zero'	.000,00V ±1 digit	
4	10V Range Zero	Copper Shorting link	AC,10	'Zero'	0.000,0V ±1 digit	
5	100V Range Zero	Copper Shorting link	AC,100	'Zero'	0.000V ±1 digit	
6	1000V Range Zero	Copper Shorting link	AC,1000	'Zero'	0.00V ±1 digit	
7	10V Full Range LF	10V rms 500 Hz	AC,10 Input Filter	'Gain'	10.000,0V ±1 digit	Select 'Input filter' for remaining steps
8	10V Full Range HF	10V rms 30 kHz	AC,10 Input Filter	'AcHf'	10.000,0V ±5 digits	
9	1V Full Range LF	1V rms 500Hz	AC,1 Input Filter	'Gain'	1.000,00V ±1 digit	
10	1V Full Range HF	1V rms 30 kHz	AC,1 Input Filter	'AcHf'	1.000,00V ±5 digits	
11	.1V Full Range LF	.1V rms 500 Hz	AC,.1 Input Filter	'Gain'	100.000mV ±2 digits	
12	.1V Full Range HF	.1V rms 30 kHz	AC,.1 Input Filter	'AcHf'	100.000mV ±5 digits	
13	100V Full Range LF	100V rms 500 Hz	AC,100 Input Filter	'Gain'	100.000V ±1 digit	
14	100V Full Range HF	100V rms 30 kHz	AC,100 Input Filter	'AcHf'	100.000V ±5 digits	
15	1000V Full Range LF	1000V rms 500 Hz	AC,1000 Input Filter	'Gain'	1,000.00V ±1 digit	⚡ Lethal voltage present. - increase calibration source in 100V steps if possible
16	1000V Full Range HF	1000V rms 20kHz	AC,1000 Input Filter	'AcHf'	1,000.00V ±5 digits	⚡ Lethal voltage present - increase calibration source in 100V steps if possible. DO NOT EXCEED 25 kHz

1.5 DC CURRENT CALIBRATION

1.5.1 General

The procedure in the table below shows all that is necessary to completely 'AUTOCAL' the DC Current function. If just the DC Current or just one range of DC Current is to be calibrated, then step 11 to 14 of the DC Voltage Calibration table should be carried out first. Then on each DC Current range just a 'Zero' and 'Gain' calibration is required.

If the 'DVM Reading After Calibration' is not in accordance with the table then repeat operation of the same 'CALIBRATE' key is permissible to improve the reading. Where no tolerance is shown in this column, only the exact reading quoted with an occasional least significant digit showing is to be expected.

1.5.2 Equipment Required

A DC Current calibration source.

1.5.3 Checking Accuracy after 'AUTOCAL'

To check the accuracy after 'AUTOCAL' the 'Specification Verification' section of the User's Handbook will be useful. It provides tables for quick reference of accuracy on all ranges and function in displayed digits.

DC CURRENT CALIBRATION TABLE

Step	Calibration Operation	Calibration Source Output	DVM Setting	'CALIBRATE' Key	DVM Reading After Calibration	Remarks
1	.1mA Range Zero	0.000μA	DC,I,.1	'Zero'	±0.000μA ±1 digit	Do not select 'Input filter'
2	.1mA Full Range	+100.000μA	DC,I,.1	'Gain'	+100.000μA ±2 digits	
3	1mA Range Zero	0.00000mA	DC,I,1	'Zero'	±.000,00mA ±1 digit	
4	1mA Full Range	+1.00000mA	DC,I,1	'Gain'	+1.000,00mA ±2 digits	
5	10mA Range Zero	0.0000mA	DC,I,10	'Zero'	±0.000,0mA ±1 digit	
6	10mA Full Range	+10.0000mA	DC,I,10	'Gain'	+10.000,0mA	
7	100mA Range Zero	0.000mA	DC,I,100	'Zero'	±0.000mA	
8	100mA Full Range	+100.000mA	DC,I,100	'Gain'	+100.000mA	
9	1000mA Range Zero	0.00mA	DC,I,1000	'Zero'	±0.00mA	
10	1000mA Full Range	+1000.00mA	DC,I,1000	'Gain'	+1,000.00mA	

1.6 AC CURRENT CALIBRATION

1.6.1 General

The procedure in the table below shows all that is required to completely 'AUTOCAL' the AC Current function. If just the AC Current or just one range of AC Current is to be calibrated, then steps 1, 2, 11 & 12 of the AC Voltage Calibration table must be carried out first. Then on each range just a 'Zero' and 'Gain' calibration is required.

If the 'DVM Reading After Calibration' is not in accordance with the table then repeat operations of the same 'CALIBRATE' key is permissible to improve the reading.

1.6.2 Equipment Required

An AC Current calibration source at 1kHz.

1.6.3 Checking Accuracy after 'AUTOCAL'

To check the accuracy after 'AUTOCAL' the specification Verification section of the User's Handbook will be useful. It provides tables for quick reference of accuracy on all ranges and function in displayed digits.

AC CURRENT CALIBRATION TABLE

Step	Calibration Operation	Calibration Source Output	DVM Setting	'CALIBRATE' Key	DVM Reading After Calibration	Remarks
1	DC coupled AC Zero	No connections to DVM input terminals	I,DC,AC,.1	'Zero'	0.000μA ±5 digits	Do not select 'Input filter'
2	.1mA Range Zero	"	I,AC,.1	Check only	<±100 digits	Cancel DC coupled
3	1mA Range Zero	"	I,DC,AC,1	'Zero'	.000,00mA ±5 digits	
4	10mA Range Zero	"	I,DC,AC,10	'Zero'	0.000,0mA ±5 digits	
5	100mA Range Zero	"	I,DC,AC,100	'Zero'	0.000mA ±5 digits	
6	1000mA Range Zero	"	I,DC,AC,1000	'Zero'	0.00mA ±5 digits	
7	.1mA Full Range	100μA, 1kHz	I,DC,AC,.1	'Gain'	100.000μA ±10 digits	
8	1mA Full Range	1mA, 1 kHz	I,DC,AC,1	'Gain'	1.000,00mA ±10 digits	
9	10mA Full Range	10mA, 1 kHz	I,DC,AC,10	'Gain'	10.000,0mA ±10 digits	
10	100mA Full Range	100mA, 1 kHz	I,DC,AC,100	'Gain'	100,000mA ±10 digits	
11	1000mA Full Range	1A, 1 kHz	I,DC,AC,1000	'Gain'	1,000.00mA ±10 digits	

1.7 CALIBRATION USING 'KEYBOARD'

1.7.1 General

The 'KEYBOARD' method of calibration is useful when a calibration source although set to a nominal value has known errors. In this situation the known value of the calibration source can be entered into the DVM before the 'AUTOCAL' process is executed. The process is functional during any calibration with a source of magnitude between 20% and 200% of the range selected, but it should be noted that for equal magnitude source errors, calibrating at the lower percentage end of range produces a higher percentage calibration error. The 'KEYBOARD' method operates for both the 'Gain' and 'AcHf' calibration operations. An example using 'KEYBOARD' to calibrate directly against a Standard Cell is shown in the table below.

1.7.2 'KEYBOARD' with Negative Inputs

If the 'KEYBOARD' method is used on DC Voltage calibration with Negative polarity sources, it is important NOT to enter a negative sign with the keyed-in source value. The instrument itself can determine the polarity of the source and update the appropriate calibration memory location.

CALIBRATION EXAMPLE USING 'KEYBOARD'

Step	Calibration Operation	Calibration Source Setting	DVM Setting	'CALIBRATE' Key	DVM Reading After Calibration	Remarks
1	1V Range Zero	Short-circuit	DC,1	'Zero'	±.000,000V	Short connecting leads at Standard Cell end
2	Connect Standard Cell	Standard Cell	KEYBOARD	–	0	
3	Enter Standard Cell Voltage	Standard Cell	1,·,0,1,8,1,6,9,1	–	+1.018,169,1	
4	1V Range Calibration	Standard Cell	–	'Gain'	+1.018,169	

1.8 'AUTOCAL' OVER THE BUS

All the calibration procedures covered in this manual can be carried out remotely using Option 50, the IEEE Bus.

Effectively, the five calibration keys are replaced by five Bus instructions and these are used instead of the 'CALIBRATE' keys listed in the Calibration tables on previous pages.

An example of calibration with the Bus is given in the table below. A complete program listing for the same calibration operation assuming an HP9825 controller is as follows:—

```
Ø: dim D$[15]                  define 15 character string
                               variable
1:  clr 728                    send 'device clear' to DVM
                               (interface 7, address 28)
2: wrt 728,"F3R3Q1W1="         program to DC 1V, SRQ
                               Mode 1, Enable Cal.
3: Ø→S
4: wrt 728,"GØ="               program zero cal. trigger
5: oni 7,"srq"                 jump to SRQ service routine
                               on interrupt
6: eir 7,128                   enable SRQ interrupts from
                               interface 7
7: if bit ("Ø1XXXXXX",S)       check status byte S
   =Ø;jmp —1                   obtained by service routine
8: dsp "Apply 1V &             prompt operator to apply
   CONTINUE"                   calibration source on com-
                               pleting zero cal
9: Ø→S;stp
10: wrt 728,"G1="              program gain cal. trigger
11: oni 7,"srq"
12: eir 7,128
13: if bit ("Ø1XXXXXX",S)
   =Ø;jmp —1
14: wrt 728,"TØWØ="            program to Internal Trigger,
                               Disable Cal. on completion
                               of gain cal.
15: lcl 728                    program DVM to local state
16: stp
17: "srq":rds(728)→S           SRQ service routine to read
                               status byte
18: red 728,D$
19: iret
*7717
```

CALIBRATION EXAMPLE USING THE BUS

Step	Calibration Operation	Calibration Source	DVM Setting	Bus Controller Instruction	DVM Reading After Calibration	Remarks
1	Set DVM to known state	—	In Remote State	'Device Clear'	—	Program DVM to predetermined state AØCØDXEØF3MØNØ OØPØQØR6SØT5
2	Set DVM to DCV, 1V Range, and prepare for calibration	+0.000000V	Calibration key to 'CAL'	'F3R3Q1W1='	—	Program DVM to Function: DC V(F3) Range: 1V (R3) SRQ Mode 1 (Q1) Enable Cal. (W1)
3	1V Range Zero	+0.000000V	In Remote State	'GØ='	±.000,000V	Program 'Zero' cal., SRQ indicates when calibration operation completed
4	1V Positive Full Range	+1.000000V	In Remote State	'G1='	+1.000,000V	Program 'Gain' cal., SRQ indicates when calibration operation completed
5	Set DVM to Internal Trigger, Disable Cal.	—	In Remote State	'TØWØ='	—	Program DVM to Internal Trigger (TØ), Disable Cal. (WØ)
6	—	—	In Local State, Calibration key to 'RUN'	'Local'	—	DVM in normal mode, free-running

SECTION 2

MECHANICAL DESCRIPTION

2.1 GENERAL

The 1071 has been designed to be either rack mounted in a standard 19" rack (3½" (2U) height required) or bench top/portable with integral tilt stand. An exploded view of the instrument is shown in Fig 2.1.

2.2 FRONT PANEL

The front panel incorporates the signal input terminals, range, function, mode, keyboard, compute and power switches and a numeric/legend gas discharge display.

2.3 REAR PANEL

The rear panel incorporates the mains supply, power input socket and fuses, digital and analog output sockets, rear and ratio signal input sockets, rear/front panel signal input selection switch, run/calibrate keyswitch, calibration interval (error) select switch and current option fuse.

2.4 EXTERNAL CONSTRUCTION

A screen printed key designation overlay adheres to the front panel trapping the polarising filter in front of the display. Both the front and rear panels are held together by two side extrusions running from front to rear. These side extrusions provide both slots for the handles or rack mounting 'ears' and locating points for the structural foam covers. The bottom cover is fitted with the tilt-stand, rubber feet and instruction card. Earth screening of the covers and guarding is provided by aluminium plates, heat-staked to the inside of the covers with electrical connections made by spring contacts.

2.5 INTERNAL CONSTRUCTION

An internal chassis is constructed from five printed circuit boards, held together by connectors at each corner and held rigid by two inner aluminium shields fixed horizontally on the instrument's centre line running from front to rear. Input terminals, switches and display are mounted on the front printed circuit board (pcb) and the power supply on the rear pcb. The two side and centre pcb's are used for interconnections between the main circuit boards.

All the main circuit boards are mounted on the inner shields with hinges and quick release fasteners with flexible connections to allow operation in the 'hinged-up' position. The Analog output circuitry is fixed on to the rear pcb of the chassis and the Ratio/Rear Input circuitry on to the rear panel. The options are mechanically fitted and require no soldering.

The chassis is mounted on to the side extrusions with nylon screws, spacers and an insulation sheet to ensure that the 'electrical spacings' of the BSI, UL and VDE specifications are achieved.

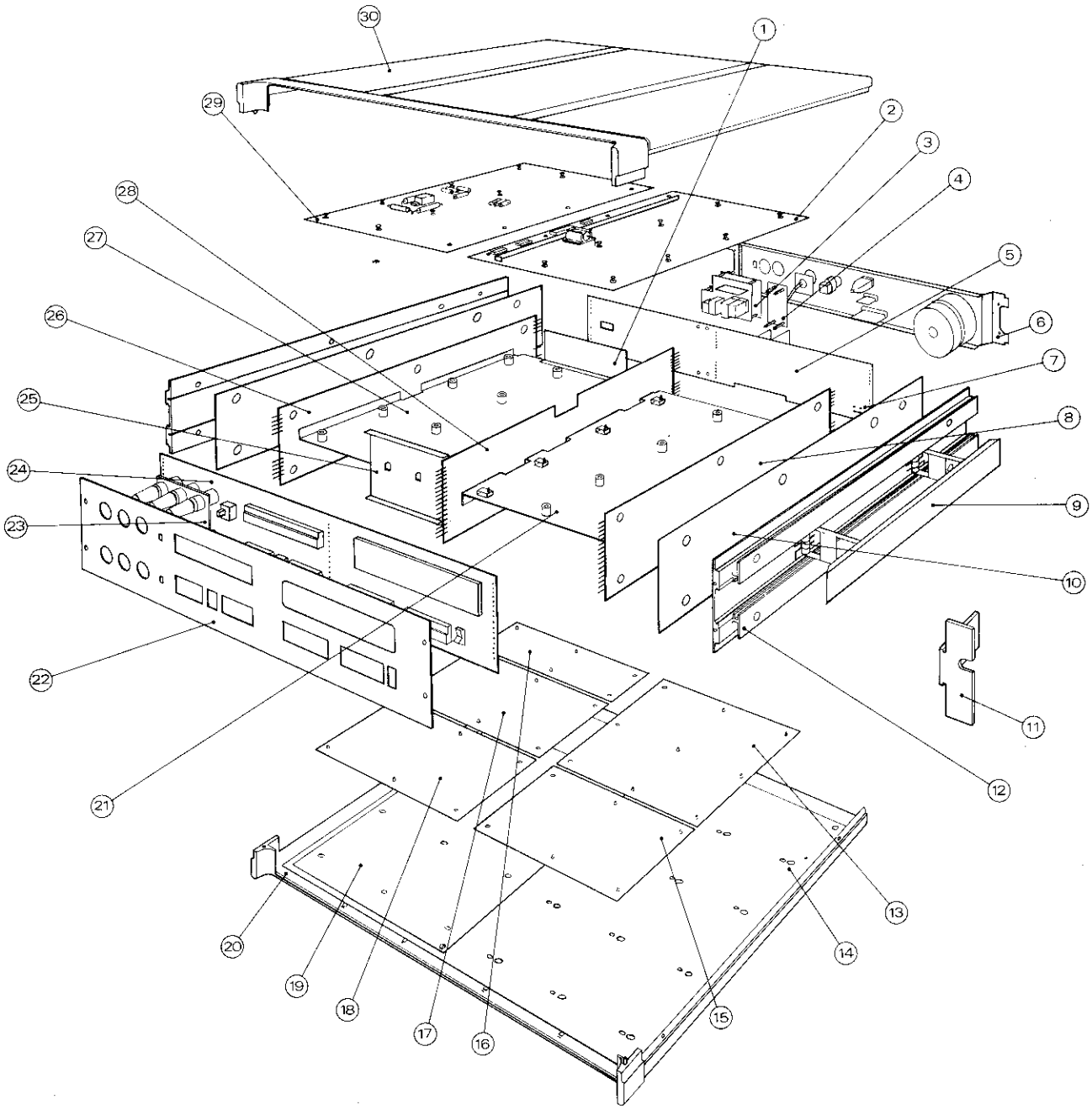

1. REAR GUARD SCREEN
2. DIGITAL ASSEMBLY
3. RATIO/REAR INPUT ASSEMBLY (OPTION)
4. ANALOG OUTPUT ASSEMBLY (OPTION)
5. REAR (POWER SUPPLY) PCB ASSEMBLY
6. REAR PANEL ASSEMBLY
7. POWER SUPPLY VOLTAGE SELECTION LINKS
8. R.H. PCB ASSEMBLY
9. HANDLE ASSEMBLY
10. INSULATION SHEET
11. RACK MOUNTING BRACKET
12. SIDE EXTRUSION
13. DIGITAL INTERFACE ASSEMBLY (OPTION)
14. EARTH SCREEN
15. DISPLAY DRIVER ASSEMBLY
16. CURRENT ASSEMBLY (OPTION)
17. AC ASSEMBLY (OPTION)
18. OHMS ASSEMBLY (OPTION)
19. OUTER GUARD SCREEN
20. BOTTOM COVER ASSEMBLY
21. R.H. CENTRE GUARD SCREEN
22. FRONT PANEL AND OVERLAY
23. TERMINAL SUPPORT PLATE
24. FRONT PCB ASSEMBLY
25. FRONT GUARD SCREEN
26. L.H. PCB ASSEMBLY
27. L.H. CENTRE GUARD SCREEN
28. CENTRE PCB ASSEMBLY
29. ANALOG ASSEMBLY
30. TOP COVER ASSEMBLY

FIG. 2.1 EXPLODED VIEW OF INSTRUMENT

SECTION 3

TECHNICAL DESCRIPTION

3.1 INTRODUCTION

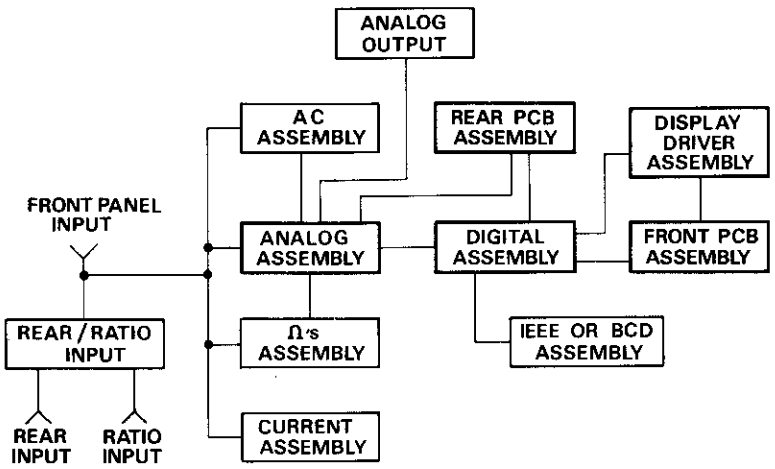

FIG. 3.1 PRINTED CIRCUIT BOARDS BLOCK DIAGRAM

The internal circuits of the basic DC only instrument are divided between five printed circuit board assemblies (shown in bold outline in Fig. 3.1).

For the purpose of explanation each assembly will be described separately and each assembly further sub-divided according to the various functions involved.

3.2 ANALOG ASSEMBLY (Circuit Drawing No. 430299).

The Analog assembly is split into three distinct sections: (i) the Analog Interface, (ii) the DC Isolator and (iii) the Analog to Digital (A - D) Converter.

The Analog Interface receives data from the Digital assembly to control the selection range scaling and other features of the analog circuitry. Messages between the Analog and Digital assemblies are passed via opto-isolators, electrically isolating one from the other.

The DC Isolator includes the preamplifier, range scaling circuits and bootstrapped sundries. The A - D section converts the scaled input signal to a time period proportional to the signal using a modified triple slope technique.

3.2.1 Analog Interface (430299 sheet 5)

3.2.1.1 Introduction

The Analog Interface provides electrical isolation between the Digital and Analog circuitry. Latched data from the microprocessor is passed through opto-isolators, decoded and latched again on an analog assembly to select function, range, test, average and the D - A converter set up conditions. A line is also provided to instruct the micro-processor which options are present and if the AC assembly is measuring a signal above 5kHz.

3.2.1.2 Power-On

At power-on the A - D converter is placed into the RESET condition (See Section 3.2.3.8). The analog circuitry is then interrogated to discern which options (if any) are fitted. Finally the analog circuitry is placed into the DC, 1000V range until a different range or function is selected (See Fig. 3.3).

To determine which options are fitted, the Digital assembly sends a series of messages across the isolation barrier, decodes them on the analog side and gates them with lines from the option assemblies to feed a signal back across the isolation barrier to the micro-processor.

Looking at the procedure, in more detail, the Analog Interface Data (ID) lines are all set to a logic '1' except one, which is set to a logic '0', depending on the option being interrogated (See Fig. 3.2). As an example we will check to see if the AC option is fitted. ID1 is set low, the rest of the ID lines set high and the Analog Interface Address lines, IAØ and IA1 set low. The opto-isolators *invert* all signals,thus M17-3 is low and M19 pins 10, 4 and 11 are high. If the AC option is *not* fitted M19-2 is driven low

Option checked	ID line low	Pin No. of M19 held low if Option incorporated
AC	ID 1	M19-3
Ω	ID 2	M19-11
I	ID 3	M19-4
RATIO	ID 4	M19-10

Fig. 3.2 POWER-ON OPTIONS FITTED TEST

via R55 from M17-3, causing M19-3 to be high, producing a logic '0' (−15 volts) on M18-4. If the AC option *is* fitted a 33kΩ resistor on the AC assembly (R14) overrides R55 and a high is placed on M19-2. The effect is to produce a high on M18-4, turning the opto-isolator M2-B on and thus COND. VAL (M2-8) is high, signalling to the Digital assembly that the AC option is fitted. Similarly, when the Ω, I or RATIO options are interrogated, the appropriate output of M19 is set low if the option is fitted causing the COND. VAL to be set high.

*Note: ID and IA lines
logic '1' ≡ +5 volts logic '0' ≡ 0 volts
AD lines
logic '1' ≡ 0 volts logic '0' ≡ −15 volts

The next step in the power-up sequence as far as the analog circuits are concerned, is to be placed into the DC, 1000V range (See Fig. 3.3 Flowchart). Firstly, all assemblies are deselected by placing logic '1's on all the ID lines, then setting the IAØ and IA1 lines low (see Fig. 3.4), clock-

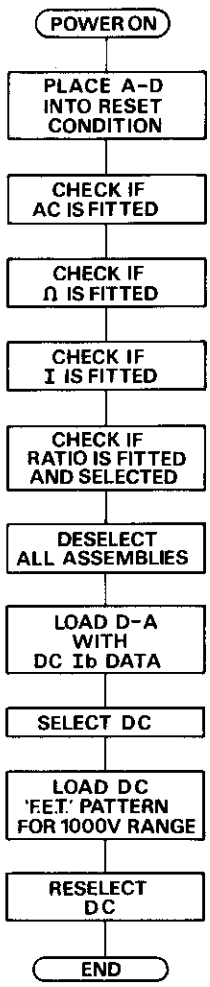

FIG. 3.3 ANALOG INTERFACE SEQUENCE: POWER-UP

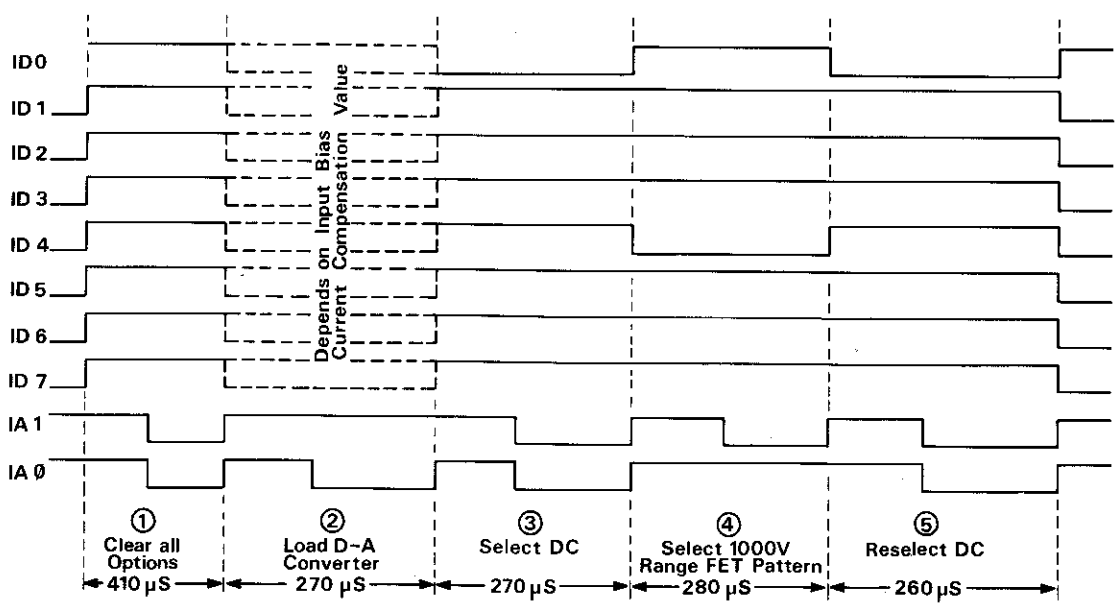

FIG. 3.4 ANALOG INTERFACE DATA LINE TIMING DIAGRAM (POWER-UP)

ing the option select latches (M20 Analog assembly, M5 AC assembly, M9 Ohms assembly, M1 Ratio assembly) from M17-3. Both IA lines then return high. Secondly, the latches of the D - A converter (M13, M14) are set up with the input bias current (Ib) compensation data. The ID lines are set to the appropriate pattern and the information is clocked on to M13 and M14 by a delayed low to high edge from M17-4, originating from IAØ going low. The delay makes sure that the signal from M17-10 has disabled the "F.E.T." latch M21. Once again, the IAØ line returns to the resting state of logic '1'. Thirdly, the DC analog circuits are enabled by setting all the ID lines high except IDO, then clocking M20 by a low to high edge from M16-6 caused by both IA lines going low. Once DC has been selected, the F.E.T. pattern latch is enabled from M12-1, and the penultimate step is to load this latch with 1000V range data from the ID lines (ID4 low, the rest high). This is executed by clocking the 'F.E.T.' latch from M17-4 once again, but this time being due to IA1 going low. The final step is to reselect DC as described above.

3.2.1.3 General Interface Update Sequence

Before the start of each reading, the analog interface undergoes a complete update. The series of events is the same as the power-up sequence for selection of function and range, as can be seen by comparing the two flowcharts (Figs. 3.3 and 3.5). When Ohms or Current is selected, the DC isolator or AC assembly is also used in the measurement procedure as seen in the following table.

Type of Measurement	Circuits Selected	Use of D - A
DC Volts	Analog Assembly	Input Bias Current Compensation
AC Volts	AC Assembly	Frequency Compensation
AC + DC Volts	AC Assembly	Frequency Compensation
Resistance	Ohms Assembly and Analog Assembly	Input Bias Current Compensation
DC Current	Current Assembly and Analog Assembly	Input Bias Current Compensation
AC Current	Current Assembly and AC Assembly	Frequency Compensation
AC + DC Current	Current Assembly and AC Assembly	Frequency Compensation

The update sequence order is (i) Deselect all assemblies, (ii) Load D - A latches, (iii) Select AC assembly or DC Isolator, (iv) Load range pattern into DC or AC range latches, (v) Deselect DC or AC and select either the Ohms or Current assembly (vi) Load range pattern into Ω's or I range latches, (vii) Reselect circuits selected in (iii) and (iv).

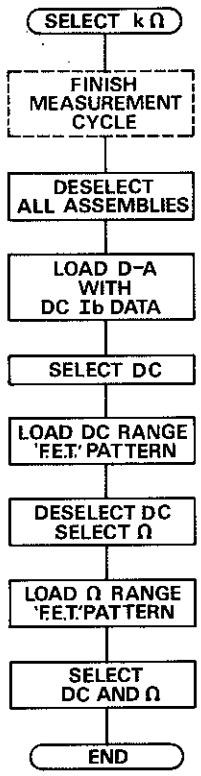

FIG. 3.5 ANALOG INTERFACE SEQUENCE: OHMS SELECT

Note: Steps (v) and (vi) are used only when I or Ω is selected.

Flowchart 3.5 gives the above sequence for an ohms update. The general form of the timing diagram for the above sequence is given in Fig. 3.6, the analog 'F.E.T.' patterns for each range of each function being given in Appendix 1.

3.2.1.4 Test

When TEST is selected, a logic '0' is placed on ID7 at stages (iii), (v) and (vii) in Fig. 3.6, i.e. each time a function measurement circuit is selected. Appendix 1 lists the 'F.E.T.' patterns of each assembly for each test measurement cycle.

3.2.2 DC Isolator Section

3.2.2.1 Preamplifier Scaling (430299 sheet 1)

Figure 3.8 shows the essential features of the isolator scaling circuit. For the purpose of explanation the same symbols are used regardless of whether the switching is accomplished electronically (F.E.T.) or by means of relay contacts. In Fig. 3.8 all switches are shown in the 1V RANGE position.

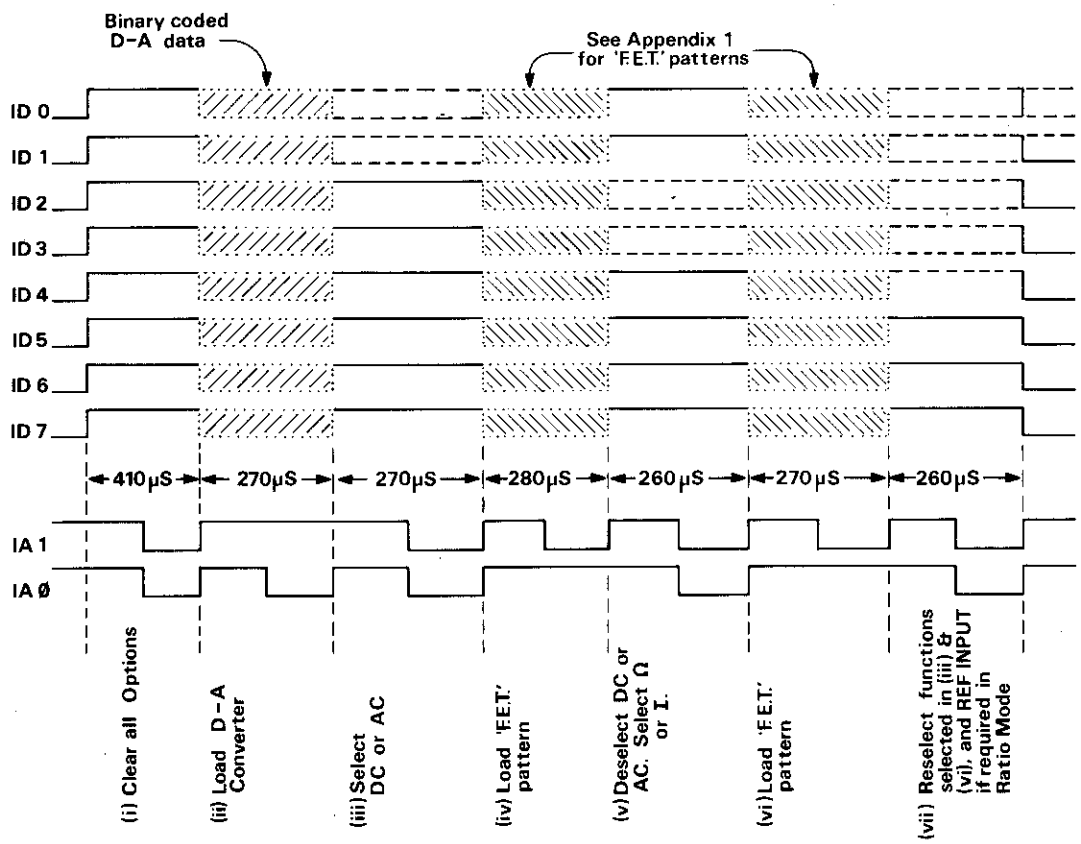

FIG. 3.6 GENERAL FORM OF ANALOG INTERFACE UPDATE TIMING DIAGRAM

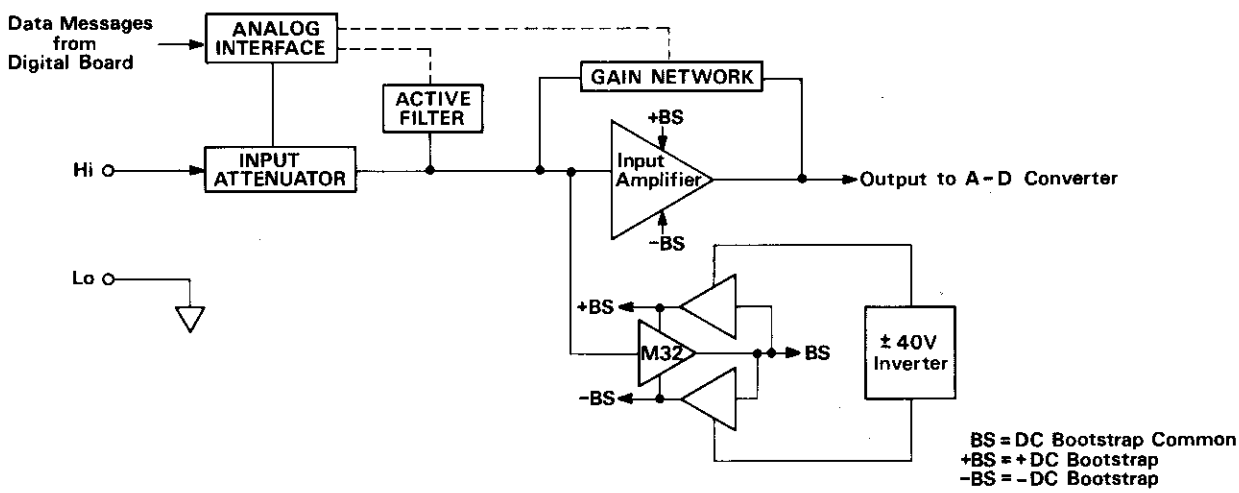

FIG. 3.7 SIMPLIFIED DIAGRAM OF DC ISOLATOR

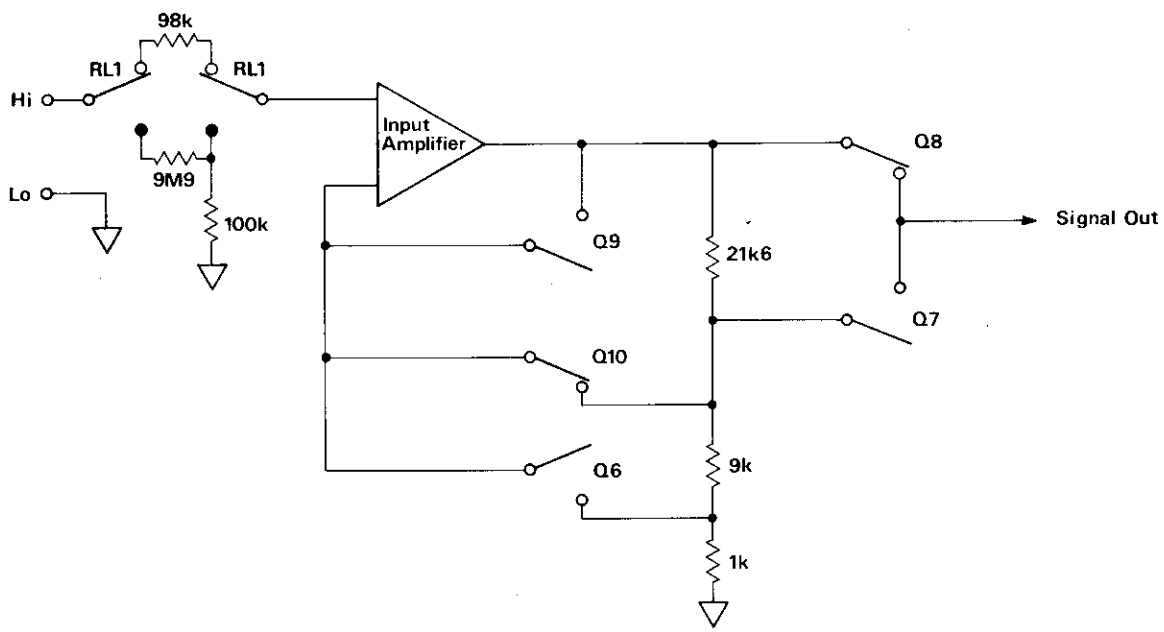

FIG. 3.8 SIMPLIFIED DIAGRAM OF ISOLATOR SWITCHING

The various switching combinations for the different ranges are as follows:—

Range	Gain	Q6	Q7	Q8	Q9	Q10	RL1
100mV	x31.6	ON	OFF	ON	OFF	OFF	ON
1V	x3.16	OFF	OFF	ON	OFF	ON	ON
10V	÷3.16	OFF	ON	OFF	ON	OFF	ON
100V	÷31.6	OFF	OFF	ON	OFF	ON	OFF
1000V	÷316	OFF	ON	OFF	ON	OFF	OFF
$\overline{DC}$		OFF	OFF	OFF	ON	OFF	OFF

The configuration of the circuit for each range is shown in Fig. 3.9.

Reference should be made to circuit diagram number 430299, sheet 1, for the complete circuit. Sheet 2 gives tables of the coding on the input control lines (from the Analog Interface).

When the 100V or 1kV range is selected, a ÷ 100, 10MΩ input attenuator (R143, R156, R149, R148) is incorporated into the circuit. This is a matched set of resistors for low temperature coefficient. The selection of a lower range energizes relay RL1 (via Q33), causing resistor chain R119-R122 to be in series with the Hi input. Should an overload signal then be applied, the resistor chain limits the current and the power dissipation is such that 1000V can be applied continuously.

The amplifier end of the resistors is clamped by zener diodes D22, D23 and Q18, Q19 to low, thus the amplifier input can never exceed approximately ± 24(volts.

The output from the DC Isolator, test point (TP13) is approximately 3.16 volts ($\approx \sqrt{10}$) for a full range (1000000) input by the following methods:— (See Fig. 3.9)

100mV Range — Q6 and Q8 are turned on; all other F.E.T.'s are turned off and RL1 energised. Thus the output of the amplifier is connected to its inverting input via R108, R109, R110, R111 and Q6, an attenuator chain of ÷31.6, giving the amplifier an overall gain of X 31.6 Q8 connects the preamplifier directly to the output.

1V Range — Q10 and Q8 are turned on, all other F.E.T.'s are turned off and RL1 energised. The output of the amplifier is connected to its inverting input via R108, R109, R110, R111 and Q10, an attenuator chain of ÷3.16, giving the amplifier an overall gain of X3.16. Q8, once again, connects the preamplifier directly to the output.

10V Range — Q9 and Q7 are turned on; all other F.E.T.'s are turned off and RL1 energised. Q9 causes the amplifier output to be directly connected to its inverting input, giving a gain of unity. The output of the amplifier is attenuated by 3.16 (R114, R115) before being passed to the output via Q7 instead of Q8.

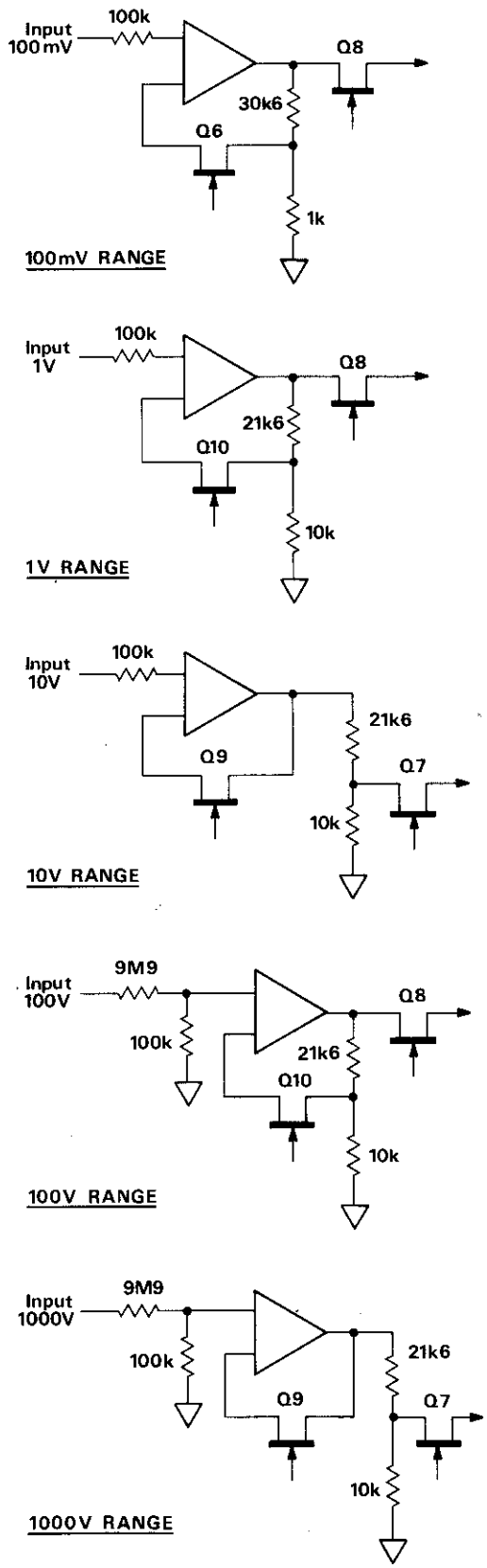

FIG. 3.9 PREAMPLIFIER GAIN CIRCUITS

100V and 1000V Ranges — These two ranges select the 1V and 10V ranges respectively but a ÷100 attenuator (R149, R156, R143, R148) is inserted between Hi and the preamplifier input when RL1 is de-energised.

3.2.2.2 Preamplifier (430299 sheet 1)

The preamplifier is designed to present an input impedance of greater than 10,000MΩ for signals up to ± 20 volts. It is also bootstrapped (tracking of both ground lines and supply voltages with input signal) being essential for correct operation of input bias compensation, temperature compensation and common mode rejection.

Q12 is a well matched monolithic NPN transistor pair exhibiting minimal voltage drift and low noise characteristics, the output being buffered by M31. To compensate for the current gain drift of Q12 at different temperatures (approx. −1%/°C), the change in the base-emitter voltage of one half of Q12 is sensed by M30. The drift compensation is linearised to 1%/°C by thermistor R218. Thus the input bias current is kept constant with temperature.

3.2.2.3 DC Bootstrap (430299 sheet 2)

Bootstrapping supplies are generated which track the input signal directly (BS), track the input signal with a positive offset of +12V(+BS) and track the input signal with a negative offset of −12(−BS).

M32 is the high impedance buffer which tracks the inverting input of the preamplifier. The offset of M32 is adjusted so that its input is within 100μV of the input of the preamplifier. M32 thus functions as the low impedance rail (BS) following the input signal.

Selection of DC(M20-3) enables the capacitive inverter driven from M33 to provide an unregulated +42V(TL4) and −42V(TL5) supply from the ±15V supply.

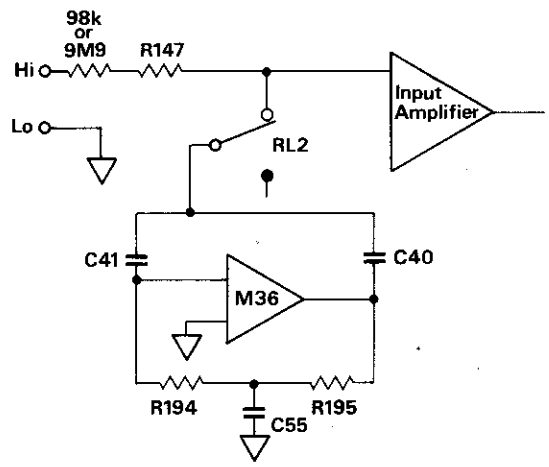

FIG. 3.10 SIMPLIFIED DC ISOLATOR FILTERING CIRCUIT

The positive Bootstrap supply (+BS) is generated as a current source comprising Q26 and the shunt regulator, Q27, referenced to D50. When the output voltage of the regulator is approximately 1.2 volts above D50 cathode, Q27 conducts current into R175. Since the current in R175 is controlled to be constant by Q30, referenced to D50, the current flowing through R174 is reduced. Hence the supply current, "mirrored" in R173, is reduced and the output voltage controlled.

The negative bootstrap supply (−BS) is generated in a similar manner. Thus bootstrapped supplies of approximately ±12 volts are produced, tracking the input signal exactly.

3.2.2.4 Filtering (430299 sheet 1)

Selection of filter causes an active filter to be switched in by relay, R12, (via Q32). The filter gives an attenuation of −54dB at 50Hz. The essential components of the filter are shown in Fig. 3.10.

3.2.2.5 Input Current (Ib) Compensation (430299 sheets 1 and 5)

During the calibration cycle, the microprocessor notes and stores the zero error due to the bias current (measured in a known source resistor). When DC is selected, this information is recalled by the microprocessor, transferred across the isolation barrier and latched into M13 and M14, see Fig. 3.11.

The output from the latches is applied to the binary resistor ladder network, AN2, providing a 255 step digital to analog conversion. The analog signal is applied to the inverting input of M3 so that the output drives current, through the diode, to control the current in the corresponding transistor of the opto-isolator, M23. The transistor of the opto-isolator sinks current to the −15V supply until the voltage across R198 is equal to the voltage applied to the inverting input of M3.

The other half of the opto-isolator acts as a current mirror, referenced to the bootstrap (BS) supply. Thus the input current correction is floated on the bootstrap supply, tracking the input signal and is divided by R84 to R128 and R129 to null the bias current of the preamplifier.

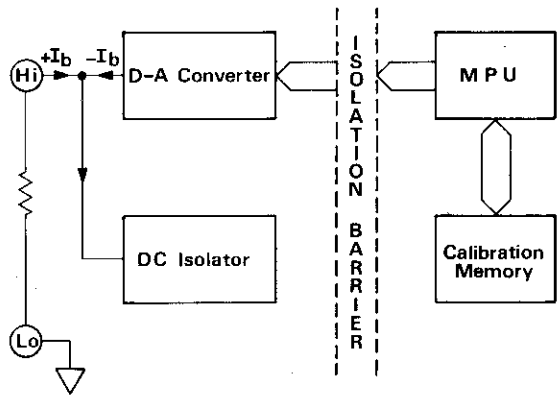

FIG. 3.11 SIMPLIFIED DIAGRAM OF BIAS CURRENT COMPENSATION

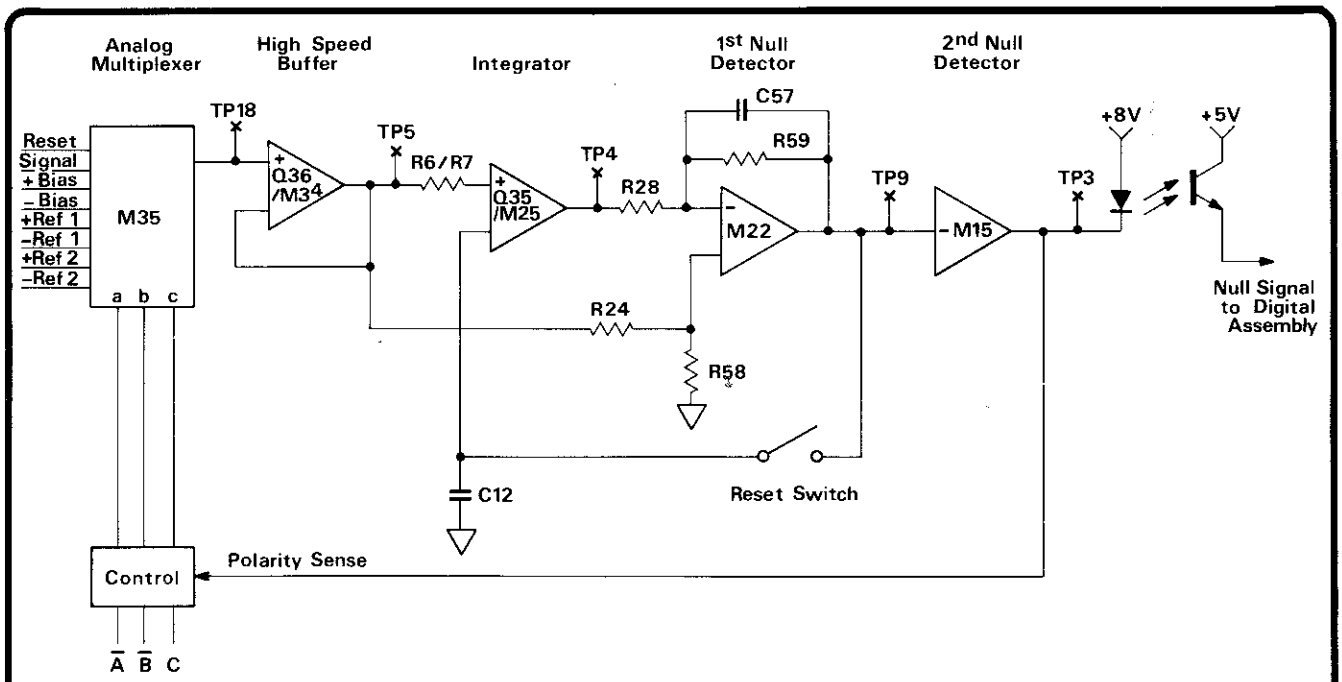

FIG. 3.12 SIMPLIFIED DIAGRAM OF ANALOG SECTION OF A – D CONVERTER

3.2.2.6 Test (430299 sheets 1 and 5)

During the self-test routine, (actuated from the front panel or remotely programmed) the DC isolator is checked for correct operation. The circuitry is placed into the 0.1V range, as described in 3.2.1.3, except that relay RL1 is not energized, (i.e. the ÷ 100 attenuator is across the input amplifier). Filter is selected and F.E.T. Q5 'closed' via M20-5 causing a small signal to be injected into the feedback path of the input amplifier. Thus a signal of −3.125 volts is output from the DC Isolator (TP13). This signal is then measured and compared with a stored value. If the measured signal is within ±6% of the stored value, the test continues with a 1V range check and a 10V range check.

Range	Output signal from DC Isolator (TP13)
0.1V	− 3.125 volts
1V	− 0.2193 volts
10V	+ 0.06932 volts

DC Isolator Output Test Voltages

3.2.3 Analog to Digital Conversion (Analog Section) (430299 Sheets 3 and 4)

3.2.3.1 General Principles

Section 1 and Fig. 1.1 of the User's Handbook gives a very basic description of the principles of the integration involved. The technique used in the Autocal Voltmeter is a quadruple slope, the two extra slopes being towards the end of the signal and reference integration periods respectively.

Fig. 3.12 is a simplified diagram showing the essentials of the analog section of the A - D conversion and should be used with timing diagram Fig. 3.13 for full appreciation of the circuit operation.

3.2.3.2 A - D Input Control

The analog signal from the DC Isolator is applied to the analog multiplexer (M35) and fed to the input of the buffer (Q36/M34). This in turn feeds the signal to the integrator comprising of Q35, M25 and C9.

Control of the multiplexer is derived from the Digital assembly via opto-isolators M4, M5 and M6. These signals control the sequence of events, allowing first the signal, then a bias voltage of the same polarity as the signal, followed by opposite polarity reference and reference ÷16 signals to the buffer and integrator. The multiplexer is then placed in a reset condition ready for the next measurement cycle. Fig. 3.14 gives the multiplexer control line sequence for both positive and negative signals.

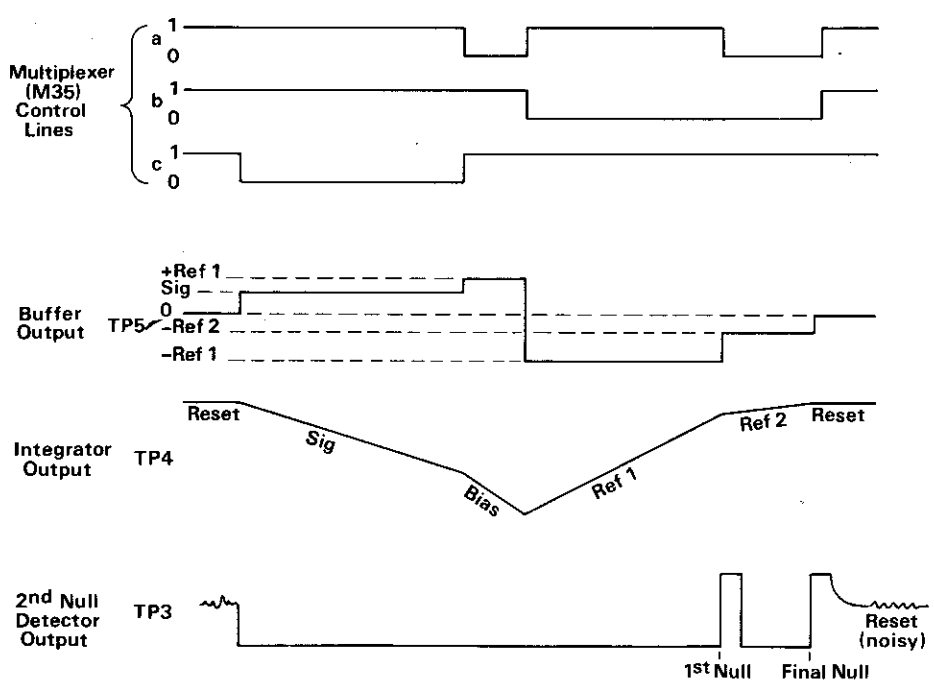

FIG. 3.13 TIMING DIAGRAM FOR ANALOG SECTION OF A – D CONVERTER (Positive Signal)

STATE	a	b	c	STATE	a	b	c
RESET	1	1	1	RESET	1	1	1
SIG	1	1	0	SIG	1	1	0
+ BIAS	0	1	1	−BIAS	0	1	0
−REF 1	1	0	1	+REF 1	1	0	0
−REF 2	0	0	1	+REF 2	0	0	0
RESET	1	1	1	RESET	1	1	1

Positive signal — Negative signal

Logic levels : (0 ≡ −8V, 1 ≡ +8V)

Fig 3.14 MULTIPLEXER CONTROL LINE SIGNALS

3.2.3.3 Reference Voltages and Control Logic Power Supply

REF 1 : The two halves of M39 in conjunction with zener diodes D60 and D59 form the positive and negative reference voltages respectively, D65 and D64 being 'start-up' diodes (see Fig. 3.15). The outputs of M39 (+11 and −11 volts) supply the defined current for the reference zeners via R212 and R38 respectively. R19 and R18 are selected by Datron so that each zener has zero voltage/temperature coefficient.

The resistor chains R41-R45 and R88-R92 are binary weighted values allowing the set up of the exact nominal REF 1 voltages, of ±6.34V, by cutting the appropriate links.

REF 2 : The second reference is 1/16th of REF 1. The positive and negative REF1 voltages are divided by R71, R68 and R214, R70 respectively.

The power supplies for the logic circuits M35, M29, M27, M28 and opto-isolators M1, M4, M5 and M6 are also derived from M39 via zener diodes D61 and D62, giving supply voltages of ±8 volts.

3.2.3.4 High Speed Buffer

C22 slows the switching edges from the multiplexer M35 so that the buffer cannot slew-limit and thus lose the charge. The signals are fed to Q36, M34 which comprise a high speed buffer with high common mode rejection ratio (see Fig. 3.16). The common mode rejection is dependent

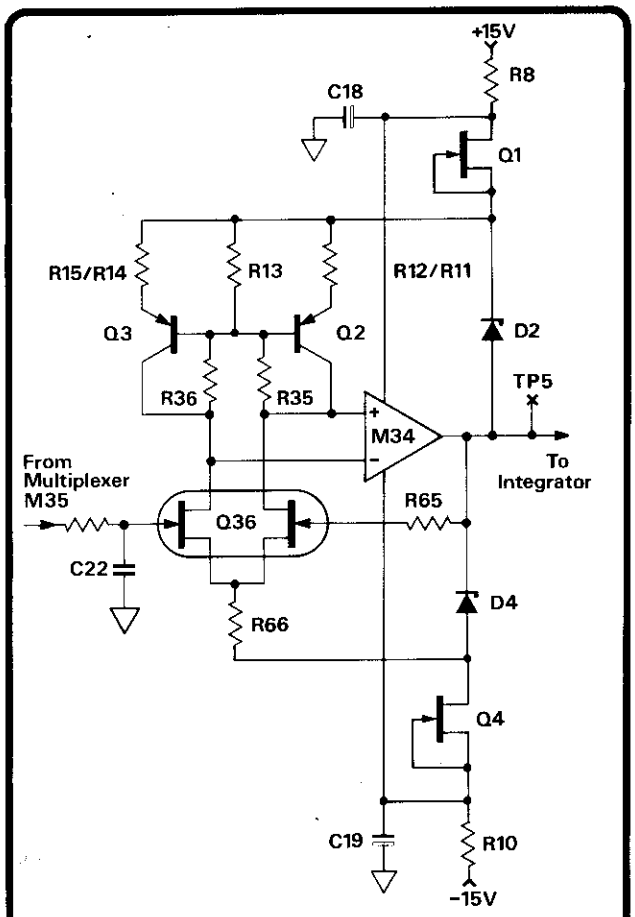

FIG. 3.16 HIGH SPEED BUFFER CIRCUITRY

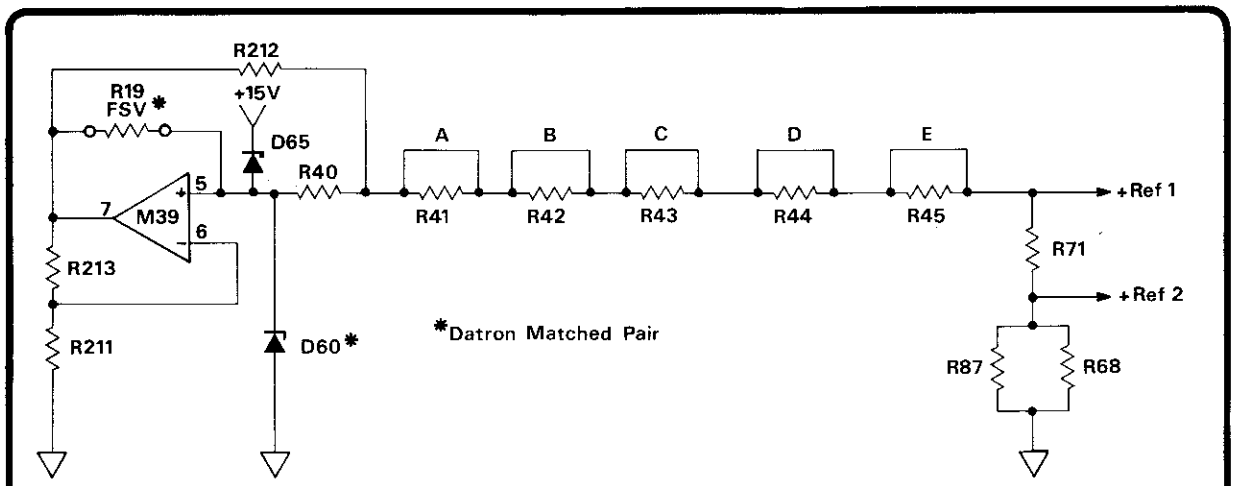

FIG. 3.15 POSITIVE REFERENCE CIRCUITRY

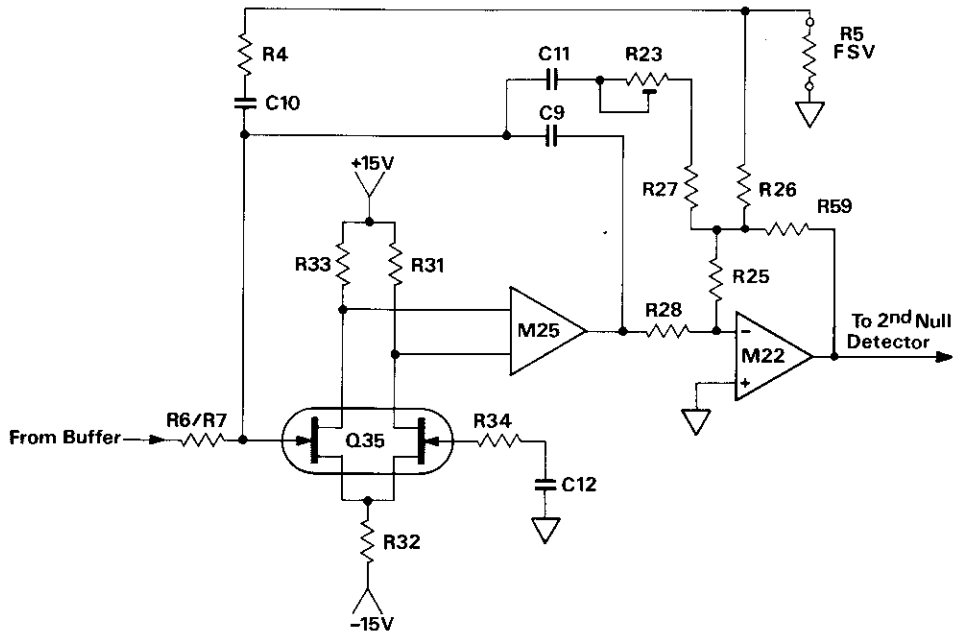

FIG. 3.17 INTEGRATOR CIRCUIT

on the power supplies of Q36 (from R66 and R11-R15) being bootstrapped to the output of the buffer, via D2 and D4. Thus the difference between input signal and power supply around the input stage is maintained constant whatever the input signal.

Q2 and Q3 boosts the gain of Q36 by allowing the drains to see a high load resistance.

3.2.3.5 Integrator

The Integrator basically comprises an amplifier made up from Q35 and M25 with a charge storing capacitor C9 (See Fig. 3.17). The low gate leakage F.E.T. pair, Q35, boosts the gain of the integrator such that it is great enough to guarantee no non-linearity errors due to finite gain.

R4, C10 driven by an attenuated and inverted version of the integrator-output waveform, via R26 and R5, form a circuit to compensate for the small amount of dielectric absorption present in C9.

C11, R23 and R27 provide similar compensation but in this case the time constant is such that it effects the linearity, with R23 set to correct linearity at 1/10th of full range.

3.2.3.6 1st Null Detector

The 1st null detector comprises a low noise amplifier, M22, in an inverting configuration, where the DC gain is controlled by the ratio of R59 to R28 for small inputs. For larger inputs from the integrator the clamp diodes, D1 and D3, prevent the amplifier from saturating.

During REF 1 the non-inverting input is offset by approximately 10mV to determine the point at which REF 2 is applied (after counting is synchronised). In REF 2 the offset reduces by a factor of 16 giving the null reference point.

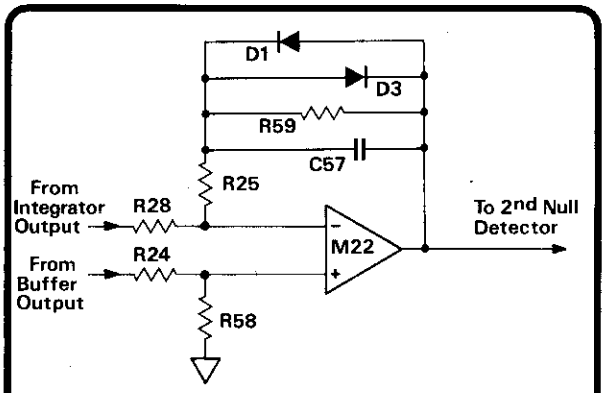

FIG. 3.18 1st NULL DETECTOR CIRCUITRY

3.2.3.7 2nd Null Detector

The signal from the 1st null detector is applied to M15 which boosts the voltage gain. The output provides a logic drive signal via opto-isolator M1, signalling the digital circuitry whenever a null condition changes, Fig. 3.19.

When in an averaging mode (Av, Input Zero or CAL ZERO selected) the 2nd null detector is offset a small amount in a cycle of 16 steps. (See Fig. 3.20). This offset is produced from the digital to analog converter, M28, which is clocked from M6, the C control opto-isolator and enabled by the level shifted $\overline{AVE}$ signal.

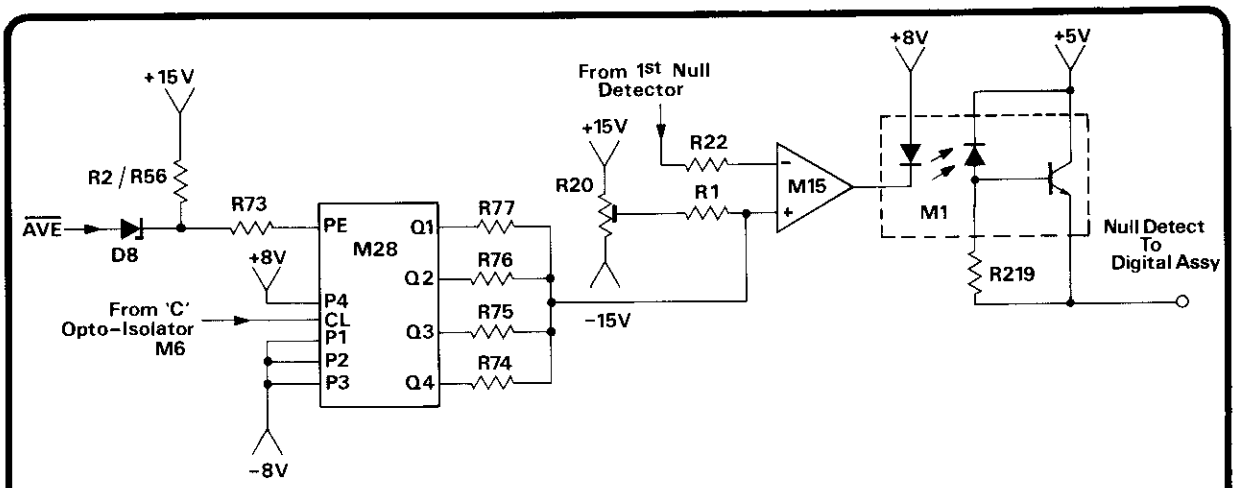

FIG. 3.19 2nd NULL DETECTOR CIRCUITRY

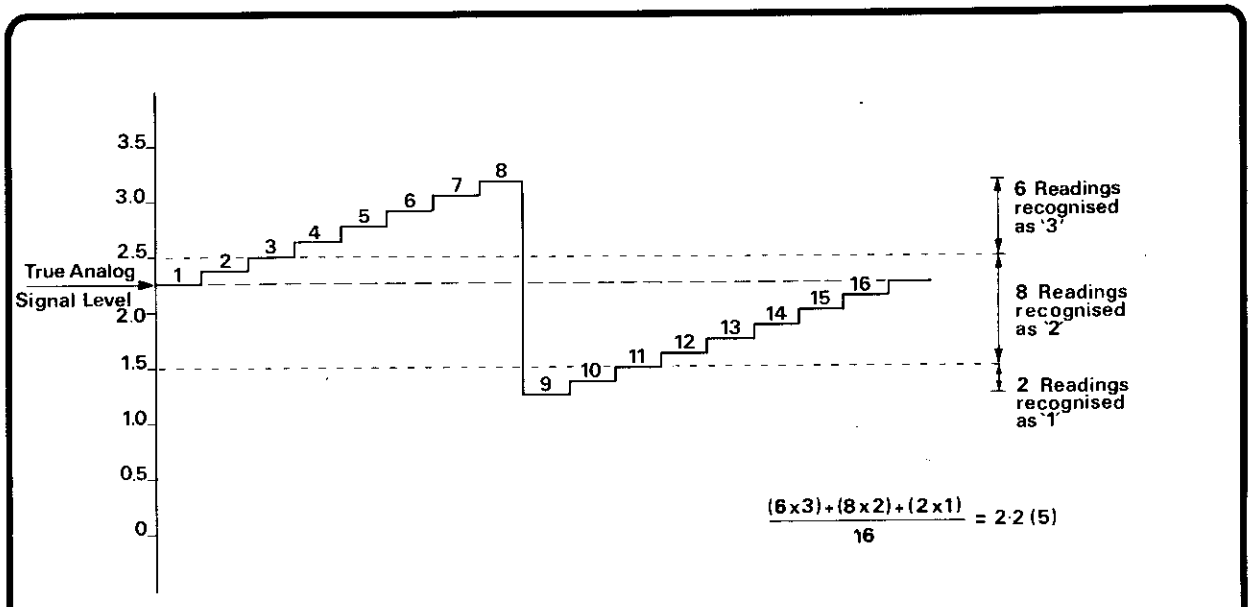

FIG. 3.20 DIAGRAM OF AVERAGING PROCESS

3.2.3.8 Reset Period

At the end of a measurement cycle or in hold, the circuitry is placed into a reset condition. The control lines of the multiplexer M35 allows the 0 volts reference input, at pin 4, to be connected to its output. (See Fig. 3.21). At the same time the reset line (M27-3) is taken high turning on M26. This reset signal, applied to pins 5 and 12 of M26 allows the output of the 1st null detector to be fed back via R60 to a sample and hold capacitor C12 on the integrator.

Thus, with the input to the A - D converter at zero volts, the charge stored on C12 is the sum of all the offsets from the multiplexer, buffer, integrator and 1st null detector, allowing the 1st null detector to indicate the true zero crossing (null) point.

The reset signal applied to M26 pins 6 and 13 merely allows a lower impedance path between the buffer and the integrator to speed up the settling time as C9 is discharged to zero.

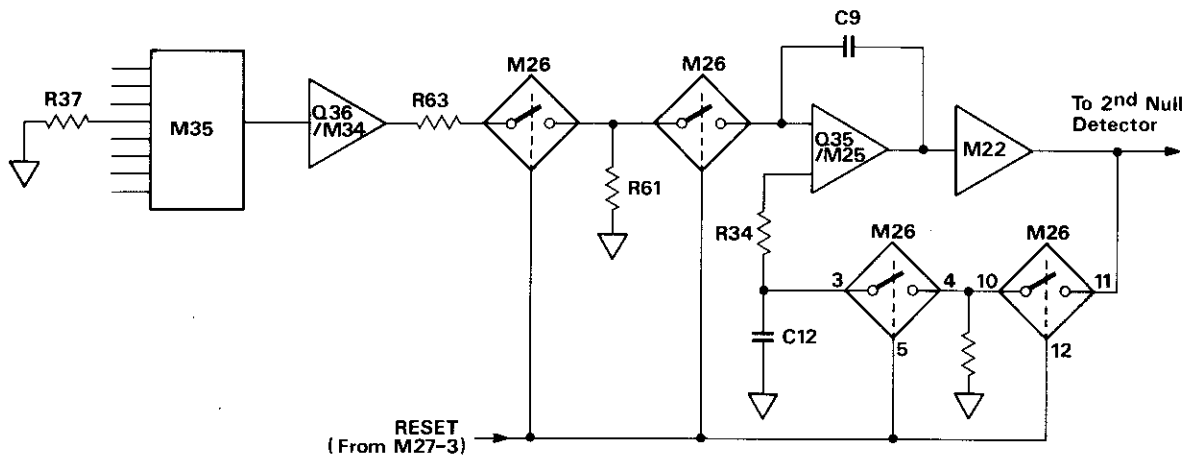

FIG. 3.21 SIMPLIFIED DIAGRAM OF A – D DURING RESET PERIOD

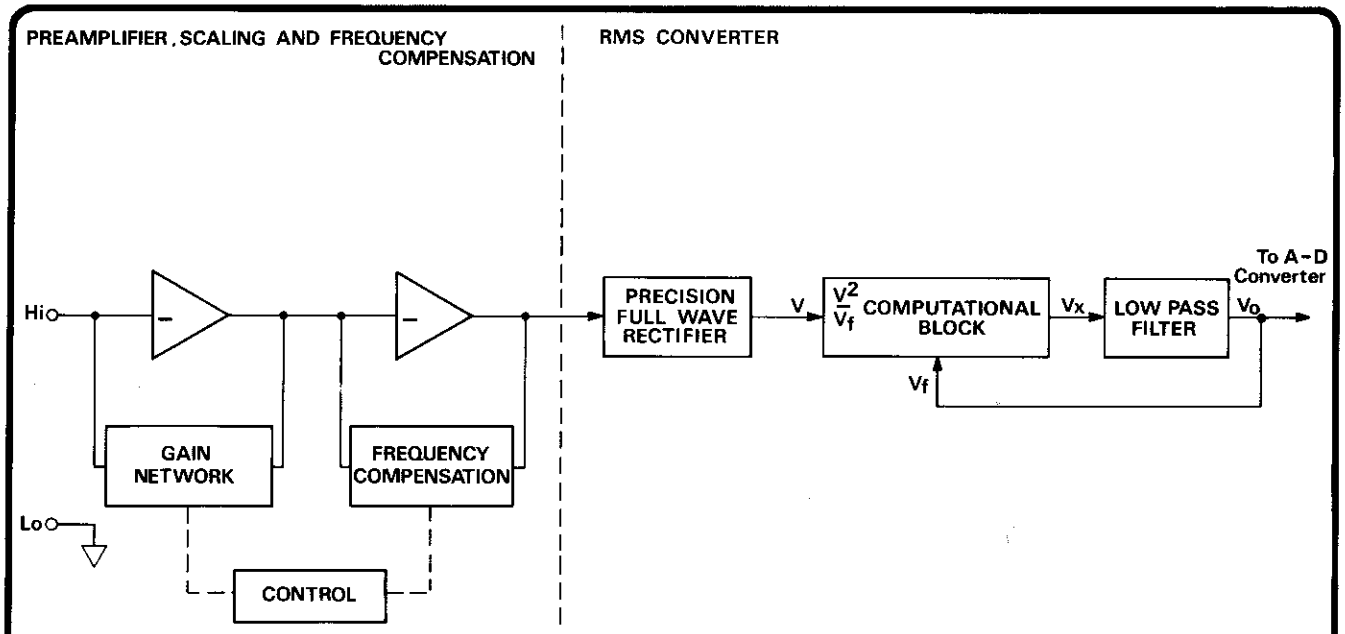

FIG. 3.22 SIMPLIFIED DIAGRAM OF AC CONVERTER

3.3 AC ASSEMBLY (Circuit Drawing No. 430402)

3.3.1 General Principles

The preamplifier buffers and ranges the signal in order to present 0.9 volts full range to the AC to DC converter section.

Once converted to an equivalent DC signal, it is applied to the analog to digital converter on the main analog assembly.

The conversion technique is electronic true RMS sensing as shown in the simplified block diagram Fig. 3.22. The Datron RMS module can be best considered as a functional block consisting of circuitry which accepts two inputs, V and V_f, computes V^2/V_f and has an output of V which is then filtered so that all the AC components are removed. The output of the block is fed back to V_f, thus closing the loop around the whole circuitry.

Mathematically: $\overline{V_x} = V_o$

but $V_x = V^2/V_f$

$\overline{V^2}/V_f = V_o$, but $V_o = V_f$

$\overline{V^2} = V_o^2$

i.e. $\underline{V_o = \sqrt{\overline{V^2}}}$

3.3.2 Preamplifier and Scaling (430402 sheet 1)

Relay RL2 is energised on selection of AC, directly connecting the Hi terminal to the input of the AC assembly. If DC and AC are selected together, the AC assembly becomes DC coupled by energising RL3, causing C57, the AC coupling capacitor, to be by-passed.

The signal is then fed to the switched gain inverting preamplifier whose full range output is 0.9 volts r.m.s. A simplified diagram of this arrangement is shown in Fig. 3.23. The frequency response is held flat, to within ±1%, by controlling the gain defining component time constants, to a similar order of accuracy. Residual errors are removed by the frequency compensation stage. (See section 3.3.4).

The preamplifier has a stable DC path provided by a dual transistor pair Q33 and a fast AC path by dual F.E.T.'s Q32 and Q34. Further gain is provided by the following long-tail pair cascade of Q20, Q21, Q22 and Q23, which is loaded by a current mirror, Q24. Q15 and Q16 with bias components Q17 and Q18 form a conventional class AB output stage. R121 compensates for the bias current of Q33, while R112 trims the offset voltage to zero.

The unity gain frequency compensation amplifier consists of a stable DC path, provided by M11, and a fast AC path provided by Q25 to Q29. The bootstrap circuit of Q19 presents the varicap diode, D11, with a high impedance, thus ensuring that the varicap is not shunted to ground.

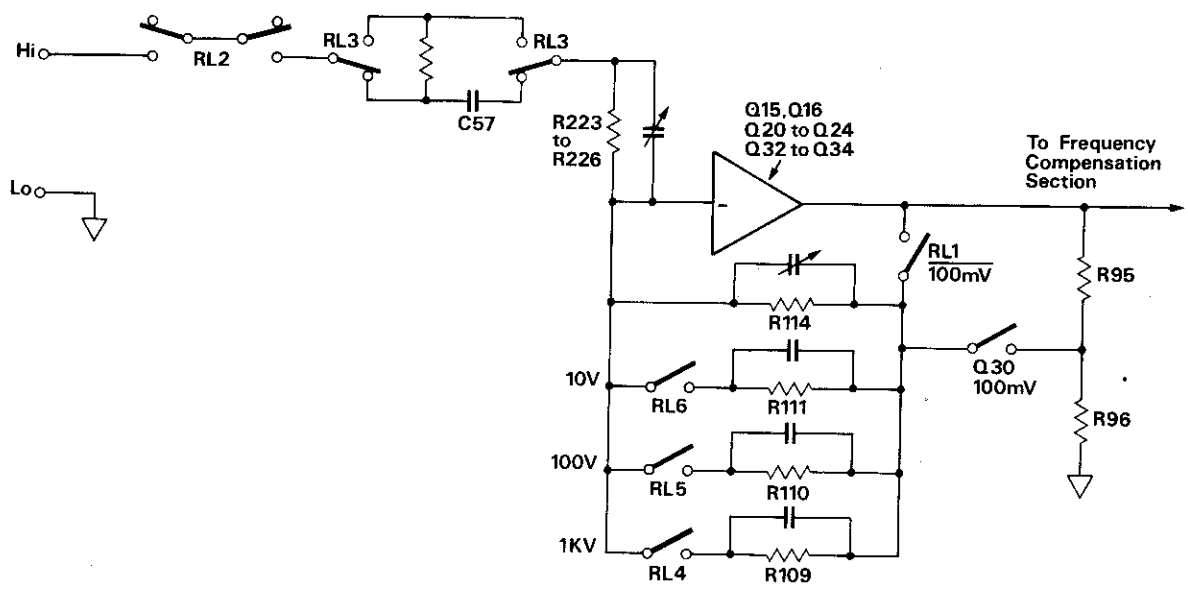

FIG. 3.23 SIMPLIFIED DIAGRAM OF THE AC PREAMPLIFIER SCALING

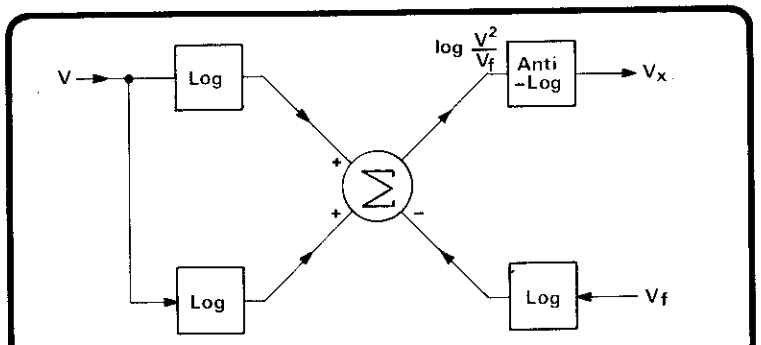

FIG. 3.25 BLOCK DIAGRAM OF RMS CONVERSION TECHNIQUE

3.3.3 RMS Converter (430402 sheet 2)

The RMS converter takes the scaled AC signal from the preamplifier and converts it to an equivalent DC signal suitable for Analog-to-Digital conversion. The conversion technique is electronic true RMS sensing as shown in the simplified block diagram Fig. 3.25.

M8 and M9 form a summing type, full wave rectifier. The output of M8, a precision half-wave rectifier inverter, is summed with the non-inverted signal with a weighting of 2 : 1 at the input of M9. This forces a full-wave rectified current to flow in RMS module M6. Potentiometer R50 balances the rectifier to provide the same output for non-inverted or inverted asymetric waveforms.

The output current from the RMS module passes into filter-buffer M1 and is converted to a nominal 5 volt for a full range signal. Q1 and Q2 switch in additional capacitors when FILTER is selected, to operate down to 45Hz. M1 is a voltage to current converter providing a feedback current to the RMS module proportional to the output voltage. R90 is the zero adjustment for the half wave rectifier M8 and R35 is the high crest factor gain adjustment. R75 is adjusted for optimum linearity.

The output of M1 (TP2) is fed to a resistor chain R1 - R7, to provide an output of 3.14 volts by the selection of resistors R2 - R5. Q3 is turned on when AC is selected and switches the output of the AC converter into the Analog-to-Digital Converter (Drawing No. 430299 sheets 3 and 4).

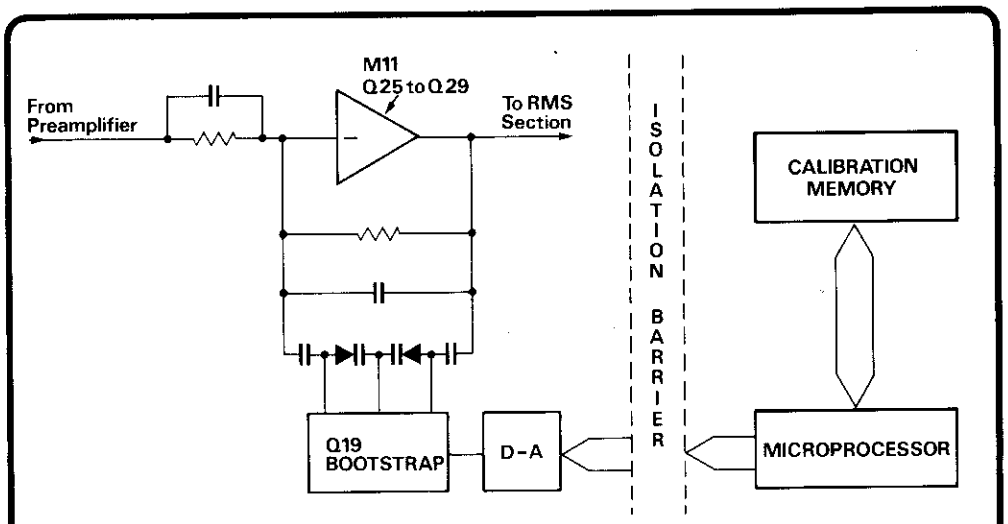

FIG. 3.26 SIMPLIFIED DIAGRAM OF AC HIGH FREQUENCY COMPENSATION

3.3.4 High Frequency Compensation

During the calibration cycle, the microprocessor notes and stores the high frequency (HF) error of each range. When AC volts is selected the compensation information for a particular range is recalled by the microprocessor, transferred across the isolation barrier and latched on to M13, M14 (Drawing No. 430299 sheet 5), see Fig. 3.26. As in the case of the Input Current Compensation (Section 3.2.2.5), the output from the latches is applied to a digital-to-analog converter, AN2. The voltage produced is fed to the AC converter via connector J1 pin 11 and applied to varicap D11. The varicap is thus adjusted to give the amplifier chain a flat frequency response.

The calibration is carried out at one H.F. frequency but since it flattens the AC amplifier response, the correction is valid for all specified frequencies. It should be noted that the calibration routine is iterative since the varicap is non-linear.

3.3.5 Frequency Detection (430402 sheet 2)

The signal frequency is monitored by M10 which is set so that a signal frequency greater than 5kHz causes a logic '1', (0 volts) on M10 - 4. This signal indicates to the Digital Board via M18, M2 (Drawing No. 430299 sheet 5) which one of the two sets of specifications should be used for calculating the measurement uncertainty when the error key is depressed.

3.3.6 Test

During the self-test routine (actuated from the front panel or remotely programmed) the AC assembly is checked for correct operation. The circuitry is placed into the .1V range as described in Section 3.2.1.3. Filter is selected and F.E.T. Q31 is 'closed' from M5 - 13 causing a signal of 0.08 volts DC to be injected into the preamplifier. Thus a signal of approximately 3.14 volts is output from the RMS section and applied to the A - D converter situated on the Analog assembly. This signal is then measured and compared with a stored value. If the measured signal is within ±6% of the stored value, the test continues with a 1V range check.

Range	Output from RMS section
.1	+3.14 volts
1	+0.314 volts

3.4 OHMS ASSEMBLY (Circuit Drawing No. 430303)

The instrument functions by measuring the voltage across an unknown resistance with a known constant current flowing in it. The converter can be split into two parts: a low drift voltage follower and a constant current source covering 6 decades from 100nA to 10mA (see Fig. 3.27).

It should be noted that when the Ohms assembly is fitted the DC Isolator Lo is no longer directly connected to the front/rear panel Lo terminal, but goes via RL1 on the Ohms assembly (connector link removed on side panel). Lo becomes an active terminal in resistance measurements.

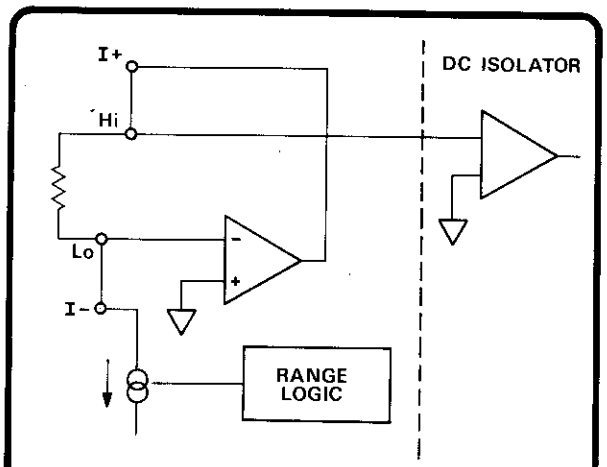

FIG. 3.27 SIMPLIFIED RESISTANCE CONVERTER

3.4.1 Low Drift Voltage Follower

When OHMS is selected, the front panel Lo terminal is connected to the –ve input of amplifier Q10/M3, the +ve input being referred to DC isolator Lo (this remains reference common). Q10/M3 together with output follower Q13, will thus apply a voltage at the I+ terminal via RL1 such that the voltage at front panel Lo is at reference common plus any offset due to Q10/M3. This voltage offset drift is kept small for changes of temperature by compensating the input bias current of Q10 with the current in R67, which changes with temperature due to the voltage drift at Q10 emitters. Q10 input bias current is initially nulled by R26.

Thus if we consider 2-wire measurement, I+ is linked to Hi, I– is linked to Lo and the unknown resistance linked between Hi and Lo, with a constant current flowing from I+/Hi, through the unknown resistance (R_X) to Lo/I–. The Lo terminal is maintained at 0V. Therefore the Hi terminal (DC Isolator input) is at $I_{constant} \times R_X$ volts above Lo. As long as the error is small referred to reference 0, the DVM will read the correct resistance.

Input protection is provided as follows:–

Voltage/Current applied to input terminals:

I+	R9, D10, D11
I–	R2, D1, D2, Q25, R23
Lo	R12, R13, Q8, Q9

Open circuit voltage limit protection:

I+	R15, R16, Q6, Q7
I–	R6, D7, D8, Q2, Q22

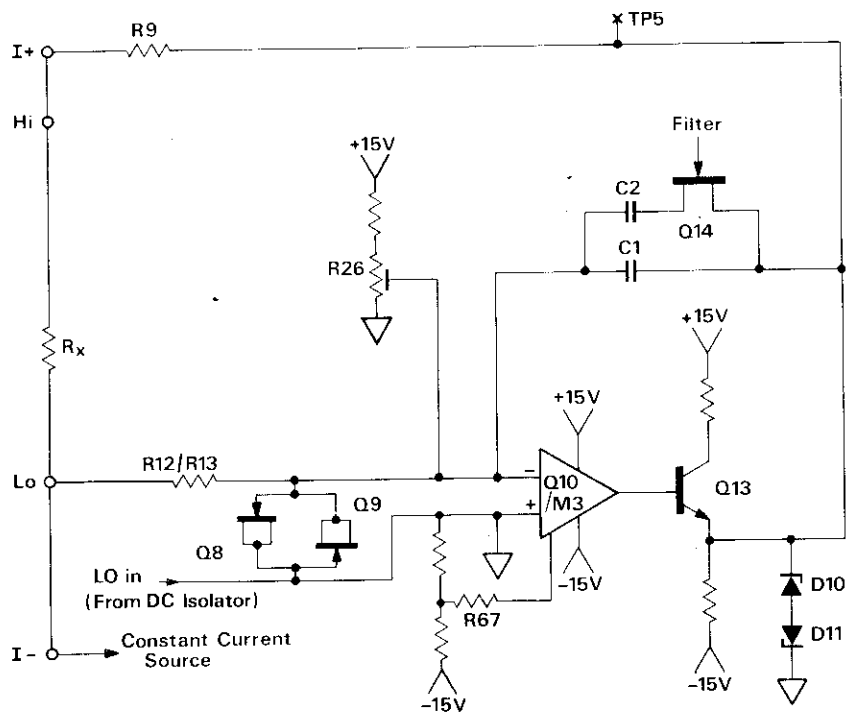

FIG. 3.28 SIMPLIFIED DIAGRAM OF VOLTAGE FOLLOWER CIRCUIT

3.4.2 Constant Current Source

Seven decades of ohms ranges are provided by 6 ranges of current and 2 ranges of DC Isolator voltage gain (100mV range for 10Ω, 1V range otherwise). See Fig. 3.29.

Range	Current	F.E.T.'s/Switches turned on	
		Current Selector	Leakage path
10Ω	10mA	Q11, M2(A)	
100Ω	10mA	Q11, M2(A)	
1kΩ	1mA	M1(A)	
10kΩ	100μA	M1(B)	
100kΩ	10μA	Q4	M2(B)
1MΩ	1μA	Q1, M1(D)	Q3, M2(C)
10MΩ	100nA	Q1, M1(C)	Q3, M2(C)

FIG. 3.29 OHMS CURRENT RANGE SWITCHING

When kΩ's is selected, Q17 (sheet 2) is turned on enabling astable M6 to produce a 200Hz signal to switch M5. Thus when gates B and C of M5 are open, C9 is charged up from the negative reference (originating from the analog section of the A - D converter). These gates then close and A and B open, sharing the charge with C8, the voltage across C8 equals the reference voltage (sheet 1). The voltage developed across C8 causes M4 to sink current through resistor chain R24, R25, R29, R30, R31 until the voltage developed across the chain balances that across C8. Thus the current required for a particular range is selected by the value of the resistor chain switched by M1, M2 and Q4. Simplified diagram Fig. 3.30 shows the resistor chain and switching for each range. On the high resistance ranges leakage paths are provided by Q3, M2(B) and M2(C).

To produce good common mode rejection, M4 supplies are bootstrapped, the supply span being defined by a 12 volt zener, D17. The filtered bootstrap supplies (+ΩBS and −ΩBS) power the astable (M6) and bilateral switch M5.

The use of ohms guard permits in-circuit measurement of resistors, provided shunt paths are greater than 100Ω and a suitable tapping point is available. Consider Fig. 3.31. Guard is reference 0, Lo is actively maintained within microvolts of reference 0 (as previously explained). Thus there is no voltage across Rz and consequently no current in Rz. Voltage follower Q10/M3 will simply pass more current into Ry from the I+ terminal until the selected current for the particular range flows through Rx.

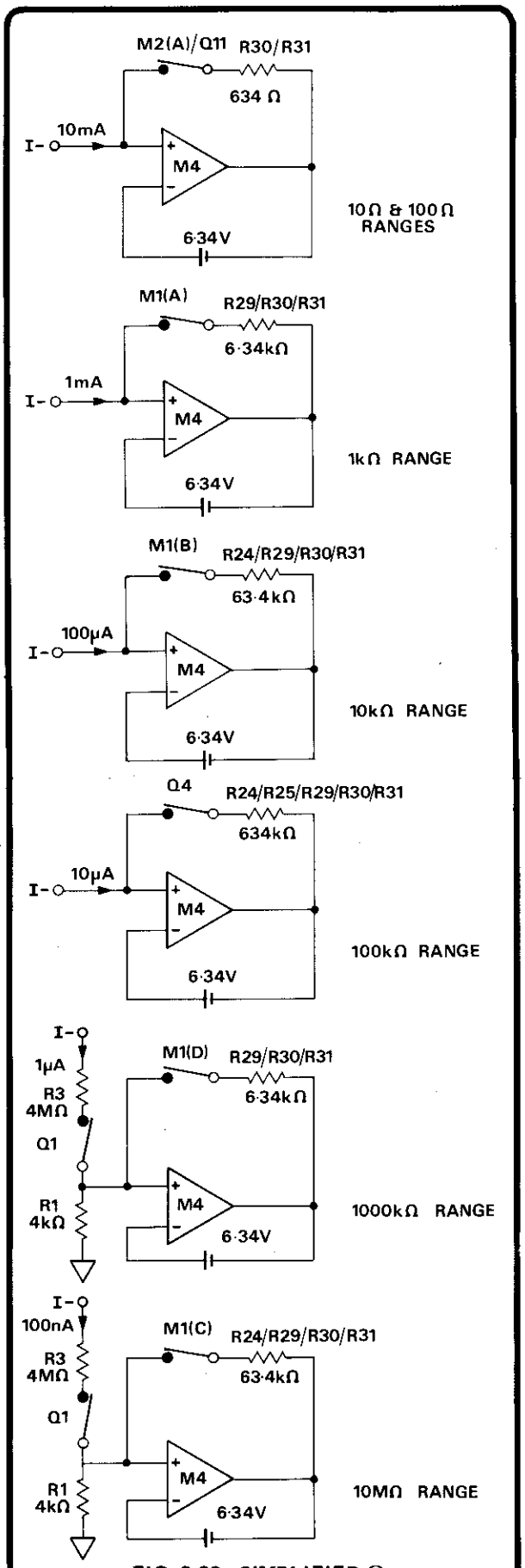

FIG. 3.30 SIMPLIFIED Ω CURRENT SWITCHING

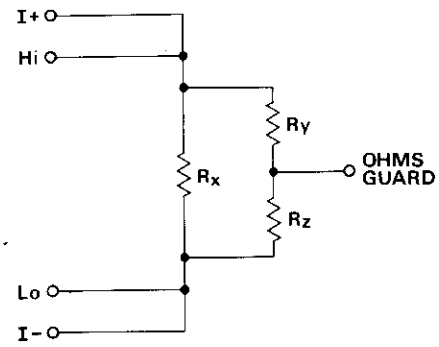

FIG. 3.31 USE OF OHMS GUARD

3.4.3 Test

During the self-test routine (actuated from the front panel or remotely programmed), the Ohms Converter is checked for correct operation. The circuitry is placed into the 10kΩ range as described in Section 3.2.1.3. Filter is selected and F.E.T. Q5 'closed' from M9-1 causing R8 (9.76kΩ) to be placed between I+ and I−. Thus with I+ and Hi, I− and Lo connected (2-wire if front panel input selected), the DC Isolator (which is also in the TEST mode) measures the voltage developed across the resistor (approx 1 volt). The resulting voltage output from the DC Isolator is applied to the A - D converter, measured and compared to the stored value. If the measured signal is within ±6% of the stored value, the test is complete.

3.5 CURRENT ASSEMBLY (Drawing No. 430304)

The Current assembly contains a set of selectable precision current shunts, the voltage developed across the shunt(s) being sampled by the DC or AC voltage measurement circuits.

3.5.1 Current Measurements

Precision current shunts of 0.1Ω, 1Ω, 9Ω, 90Ω and 900Ω connected in series provide an output of 100mV for a full range signal. To eliminate errors in measurement due to lead or contact resistance, all current shunts are 4-wire sensed i.e. a pair of current leads and a pair of voltage leads to the shunt(s) switched separately. The voltage developed across the shunt(s) is fed to the DC Isolator in DCI and the AC assembly in ACI or DCI + ACI. The latter, DC coupled mode, computing the RMS value of the DC and AC component of the input current. These circuits are placed in the '.1V range' amplifying the signal by 3.16. The output of buffer M5 is used to guard leakage paths on the current board.

Overload protection up to 2 amps is provided by diodes D13 – D16. An input greater than 2 amps causes the current fuse, located on the rear panel, to blow.

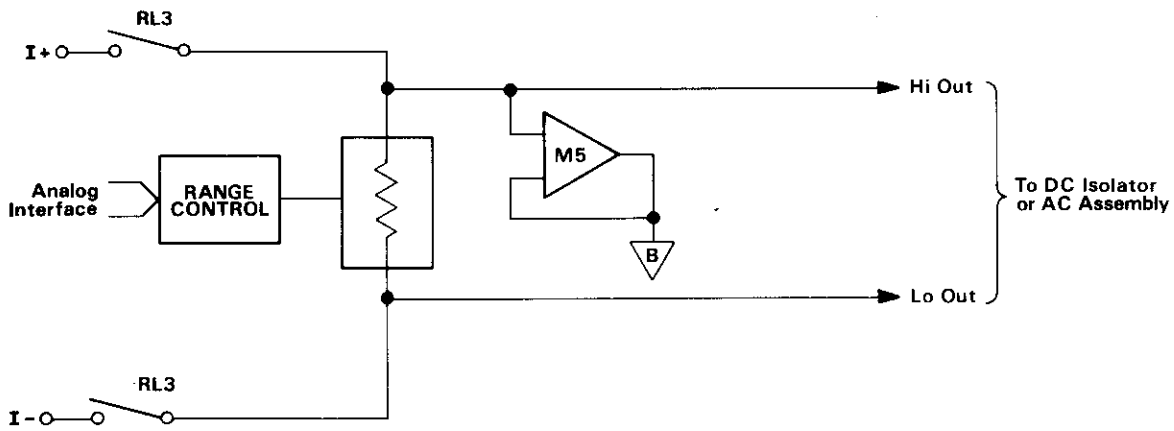

FIG. 3.32 SIMPLIFIED DIAGRAM OF CURRENT ASSEMBLY

3.5.2 Test

During the self test routine, the Current assembly is checked for correct operation. The circuitry is placed into the .1mA DC current range as described in Section 3.2.1.3 with the DC Isolator in the 100mV range. Filter is selected and F.E.T. Q9 closes from M4 – 10 allowing current to flow through R18 to the 100μA range shunts, from the +15V supply. Thus a voltage of approximately 0.3 volts is developed across the shunts and fed to the DC Isolator. This voltage combined with the effect of the voltage injected due to the DC Isolator being in Test (Section 3.2.2.6) causes the output of the DC Isolator to be approximately 5.75 volts. After measurement by the A-D converter, the value is compared to the stored value. If the measured signal is within 6% of the stored value, the test is complete.

3.6 REAR INPUT/RATIO INPUT (Circuit Drawing No. 430307).

3.6.1 General

The Rear Input/Ratio Input assembly contains the switching circuitry to enable one of the three analog signal sources to be connected to the measurement circuits of the DVM. When Rear Input is selected either remotely or on the rear panel of the instrument and the RATIO key is depressed, the switching circuitry, under microprocessor control, selects the ratio (reference) input then the rear (signal) input, taking one valid reading at each stage.

3.6.2 Front Panel/Rear Panel Input

When Front Input is selected, either remotely or on the rear panel, this causes the base of Q1 to be connected to 0 volts, turning on the transistor. Thus relays RL1 and RL2 are energised, causing the front signal input terminals to be connected to the measurement circuits. Should Rear Input be selected, relays RL1 and RL2 are de-energised, connecting the rear input to the measurement circuits.

3.6.3 Ratio

During the last part of the analog interface update sequence (see Fig. 3.6) M1-5 is taken high causing the flip-flop (M1) to be clocked high (0 volts) on pin 1. The signal is applied to Q2 energising the ratio mode input selector relays, RL3 and RL4. Thus the inputs to the 'Ratio Input' on the rear panel are connected to the measurement circuits. Once a valid reading has taken place, the 'Rear Input' lines are connected to the measurement circuits by leaving M1-5 low. This de-energises the relays as Q2 is turned off. Another reading is taken and the ratio calculated.

3.6.4 Test

When TEST is selected, the ratio option is checked to see if it is fitted, by interrogating the AD4 line to see if it is held high.

3.7 ANALOG OUTPUT (Circuit Drawing No. 430308)

3.7.1 General

The Analog Output Board accepts the DC Isolator or AC Converter Output and converts it to a $\pm$1 volt DC full range output. This signal can then be used, for example, to drive X-Y plotters or strip chart recorders.

3.7.2 Description

The 3.16V full range signal from the DC Isolator or AC Converter is buffered by unity gain amplifier M2. The output is potentially divided by R7 and R8 so that 1 volt full range is presented to M1, another unity gain amplifier. Potentiometer R5 is adjusted to remove any offset caused by M1 and M2. Positive temperature coefficient thermistors R3, R4 and diodes D1, D2 protect the Analog Output circuitry from accidental input applied to the Analog Output external connector.

3.8 DIGITAL ASSEMBLY (Circuit Drawing No. 430300)

The Digital assembly contains the circuitry providing the general management of the instrument and the digital section of the A-D converter. Fig. 3.33 outlines the main portions and signal highways of this board.

3.8.1 Processor and Memory (430300 sheet 1)

A 6800 microprocessor (MPU) together with 8k bytes of memory controls the communication between the front panel, digital interface, display drivers, Digital and analog assemblies. The memory can be split into five main areas:—

(1) Program Memory - needed to operate the whole instrument system.

(2) Constant Data Memory - e.g. Self Test limits, Error read-out specifications and other fixed factors.

(3) Non-volatile Calibration Memory - used to store all the calibration errors used for each reading and determined during the 'Auto-cal' cycle.

(4) Operating Memory - used for scratch pad operations and storing.

(5) Volatile Display Memory - volatile data such as Max-Min stores, Limit stores and computation stores.

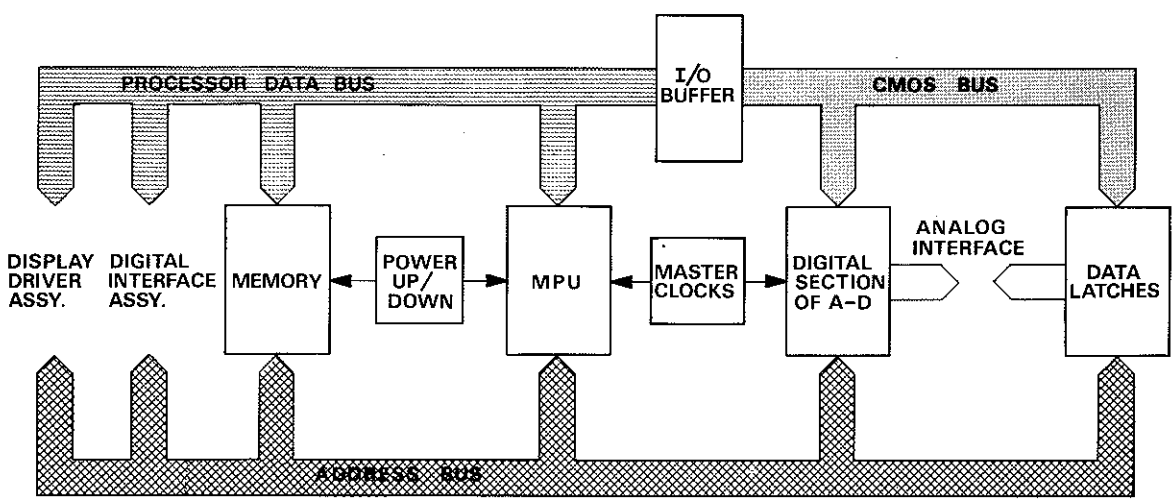

FIG. 3.33 SIMPLIFIED BLOCK DIAGRAM OF DIGITAL ASSEMBLY

3.8.1.1 Software Overview

The system uses the technique of a looping prioritised job scheduler (see Fig. 3.34). Each job driven from the scheduler is controlled by a flag in the system workspace which is set when the job is required to be run and cleared when completed. Priority of activation is ensured by making each job exit on completion, to the top of the schedule.

Program Modules: The program memory is split into a series of functional modules, each module corresponding fairly closely to a major functional area and hence to one of the jobs activated by the job scheduler, the larger ones being sub-divided, see Drawing No. 890011.

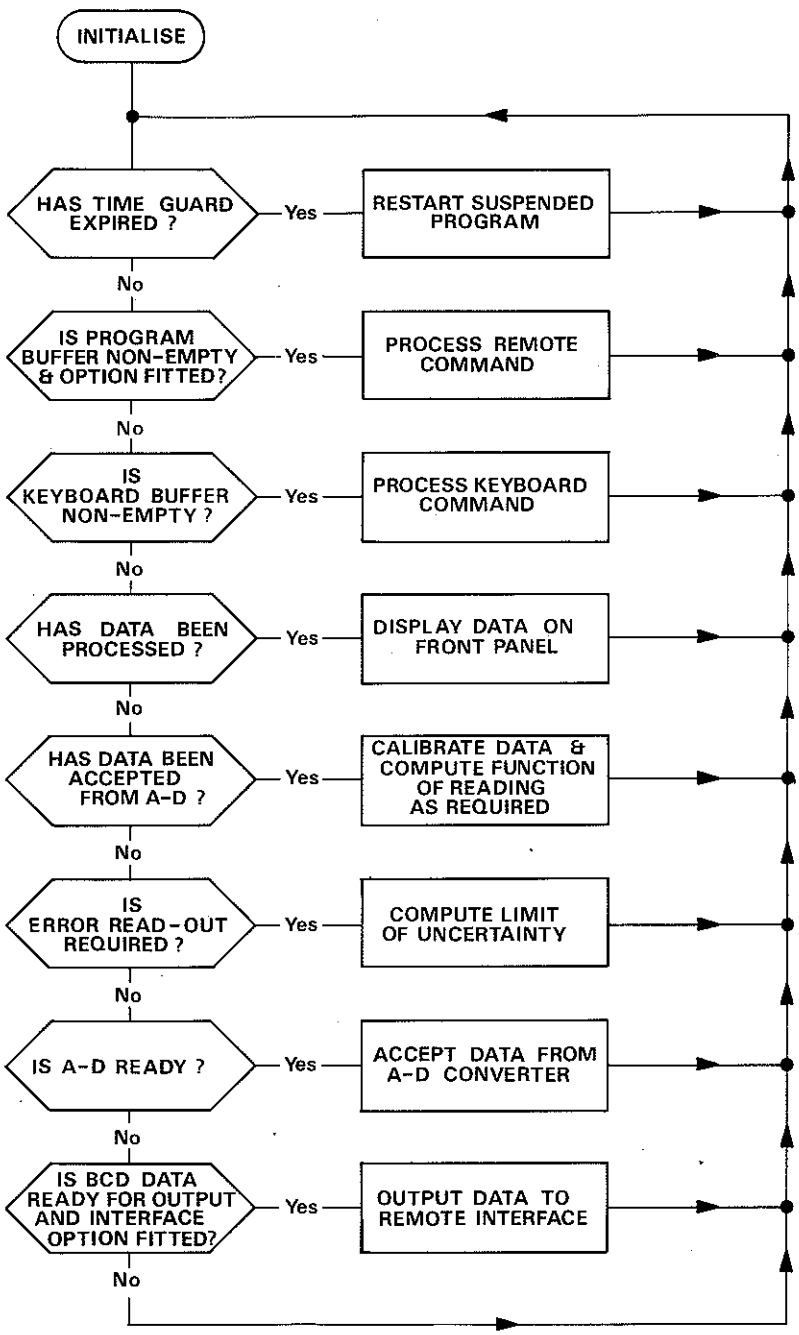

FIG. 3.34 JOB SCHEDULER

DRAWING No. 890011
FIRST USED ON 1061/1071

ALL BURRS TO BE REMOVED

NOTES

1. Y DENOTES YES ; N DENOTES NO.

ISS	CHANGES
1	RELEASED 26.3.79
2	ECO 906/906 CHANGES TO SHEETS 2-20 ONLY 25.7.79
3	ECO.939/940 19.10.79
4	ECO.961/962 19.10.79
5	ECO.989/990 19.10.79

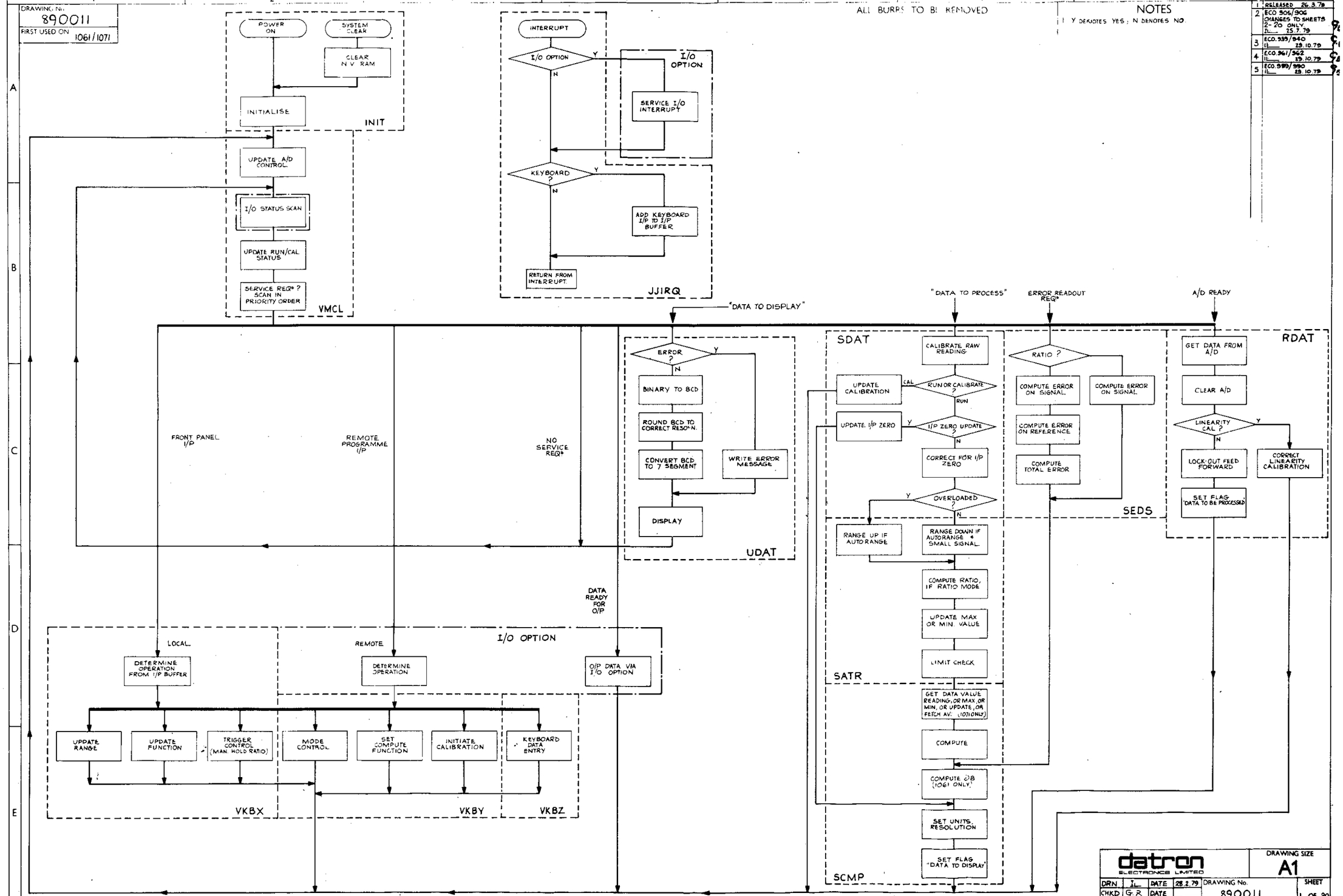

datron ELECTRONICS LIMITED

DRAWING SIZE A1

DRN	IL	DATE	28.2.79	DRAWING No. 890011	SHEET 1 OF 20
CHKD	GR	DATE			
APPD		DATE			

Data Control: Data handled by the system consists of a stream of measurement information on which a number of operations are carried out and a second stream, asynchronous with the first, consists of commands derived from the front panel or digital interface controlling both the measurement circuits and computation programs. Operations on the measurement stream basically consist of acquiring the raw data from the A-D converter, calibrating this data and carrying out any other computations, and converting and formatting the data for output. Note that a job consuming data is given higher priority than the one producing data for it, allowing a producer to place data into an empty buffer. The consumer is activated by a flag, set by the producer to indicate data ready in the buffer.

Process Control: Control of the instrument by the processor, initiated from the front panel or digital interface, is arranged by using a 'pipeline control' of the major system state and a 'first in/first out' buffer between the interrupt level routine receiving the control command and the main program implementing it. The major system state consists of the range, function, resolution, filter, ratio, autorange, etc., flags and the computation mode (reading, A-B, ÷ C, etc.). The pipeline comprises three levels. The top, level 1, reflects the state being programmed, the second, level 2, the state of the measurement circuits and the third, level 3, the measurement being processed. When a command is input, level 1 is updated (e.g. a new range is selected) and as soon as the measuring circuits are not converting an input signal, the state in level 1 is moved to level 2 causing the measurement circuits to update to the new state. When an A-D conversion is complete, data is read from the A-D and the state transferred from level 2 to 3, providing information for the processing routines. Additionally, at this time, the level 1 to level 2 transfer is repeated and the measurement circuits again updated to allow for commands received while the conversion is in progress.

A second control mechanism used is to input all the commands via a 'first in/first out' buffer between the interrupt level routine receiving the command and the main program implementing it. Thus the processor under remote control is able to 'simultaneously' set up the requirements for the next reading, convert the current reading and process the last one.

3.8.1.2 The Two-Phase Clock

The 6800 requires a non-overlapping positive two-phase (Ø1, Ø2) clock and is derived from the crystal master clock (sheet 4) producing a 1.6MHz (50Hz supply) or 1.9MHz (60Hz supply) signal. M57 acts as a ÷ 2 thus antiphase 800kHz square-waves appear on pins 14 and 15. If data is not being transferred to the CMOS Bus, M57-11 is high, thus M56-8 follows M57-15. The non-overlapping of Ø1 and Ø2 is produced by the utilisation of the inherent propagation delay (approx. 10nS) through each gate of M54 and M55. This is best seen by referring to Fig. 3.35 the circuitry around the output stage increasing the voltage levels demanded by the processor (0V and +5V).

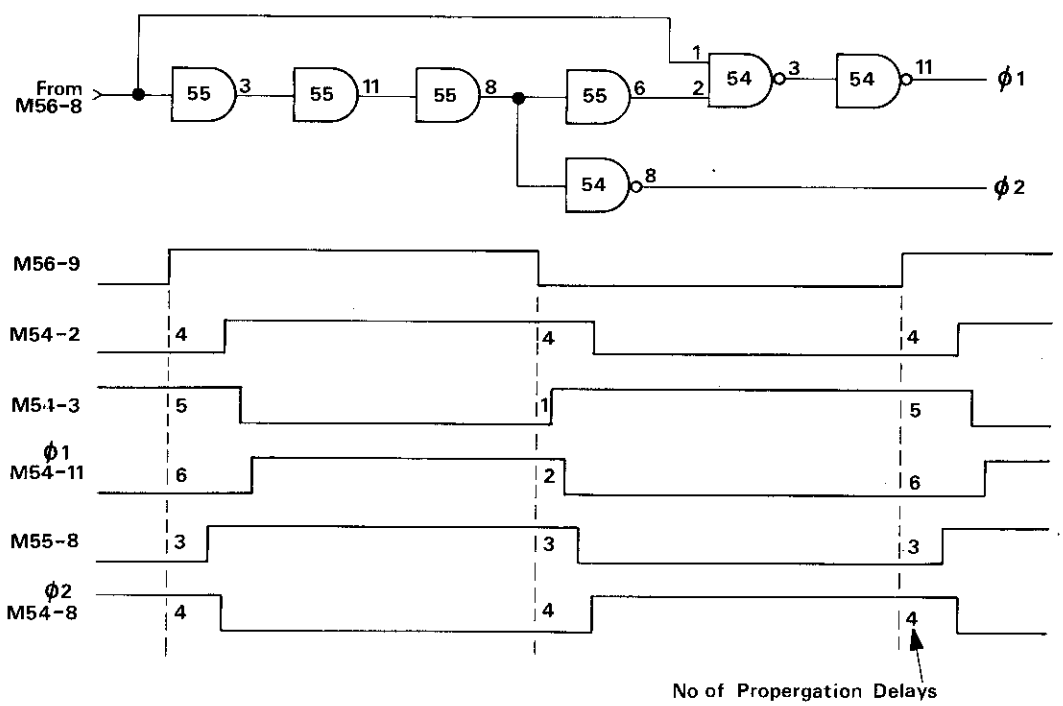

FIG. 3.35 TWO-PHASE CLOCK GENERATION

During a period when data is being transferred across the CMOS Data Bus, Ø1 and Ø2 are reduced to 400kHz by utilising the other half of M57. The signal CMOS I/O is high thus a 400kHz square-wave is output on M57-11, the waveforms of Ø1 and Ø2 are altered such that one half of the period is stretched, covering 1½ cycles of the normal 800kHz operation. (See Fig. 3.36).

3.8.1.3 RAM/ROM Circuit

The 6800 uses two ROM's which contain the programs necessary to run the instrument. Each ROM is able to store up to 4096, 8 bit 'words' of program information which are grouped in program modules. Both ROM's receive the address information output by the processor on to the Processor Address Bus. The particular ROM to be addressed being selected by decoding three of the address lines and applying the resultant to the 'chip select' line (via M34 pins 6 or 8) (See Fig. 3.37).

The information held in that particular location is sent back to the processor via the Processor Data Bus.

The processor also uses 512 bytes of 8-bit wide RAM made up from four 256 x 4 bit RAM'S. Half of this memory (M19/20) is backed up with a battery to provide the non-volatile calibration and 'input zero' store and can only be overwritten when CAL or INPUT ZERO is selected. The remaining 256 bytes (M36/37) are used as operating memory for scratch pad operations and storing volatile data (e.g. Max, Min). A particular location is set by the 6800 on the Processor Address Bus using A_0 to A_7, the pair of RAM'S being selected by decoding some of the other Processor Address lines with VMA.Ø2. Control of the read/write lines is performed by the MPU, the signal being gated with a 'Master Clock ÷ 2' signal to provide correct timing.

An instrument power up is detected by M60/M62 causing an initialisation $\overline{\text{RESET}}$ signal to be fed to the MPU via Q16. (See Fig. 3.38).

During a power-up or power-down (+5V supply line <+4.75V) a signal from the supply-level detectors prevents RAMS M19 and M20 from being overwritten by holding the CS (chip select) lines low (<0.2 volts) via Q14 for a period of approx. 25mS determined by R55/C32.

3.8.2 CMOS Address Decode and Input/Output Circuits (430300 sheet 2)

Information is transferred to and from CMOS devices via the CMOS Data Bus during periods when the signal CMOS I/O is high (M33-6). This takes place when the Processor Address Bus bits A11, A14 and A15 are high. The transfer of data between the Processor Data Bus and the CMOS Data Bus takes place at 400kHz, the Read/Write lines selecting the direction of information through the tri-state buffers M4, M5 and M6.

In order to uniquely address the various CMOS input/output devices, the address lines must be further decoded. M16 and M32 are dual 2 to 4-line decoders using the states of CMOS I/O and address lines A0, A1, A4, A5 to enable or partially enable the input/output devices, except the output of M16 pins 2 and 15 which are inverted and gated with data line A2 to produce the required decode.

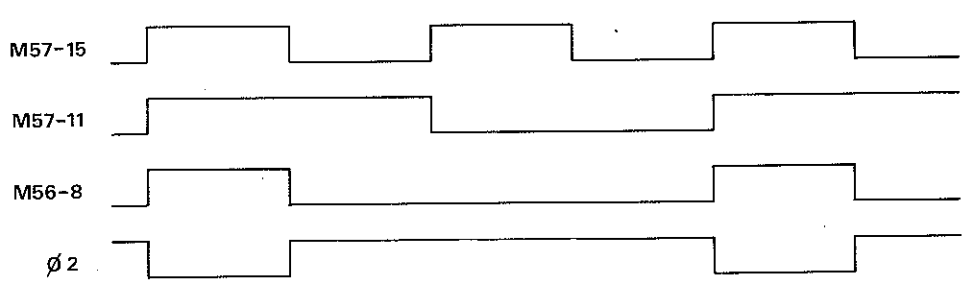

FIG. 3.36 TIMING DIAGRAM OF STRETCHED TWO-PHASE CLOCK

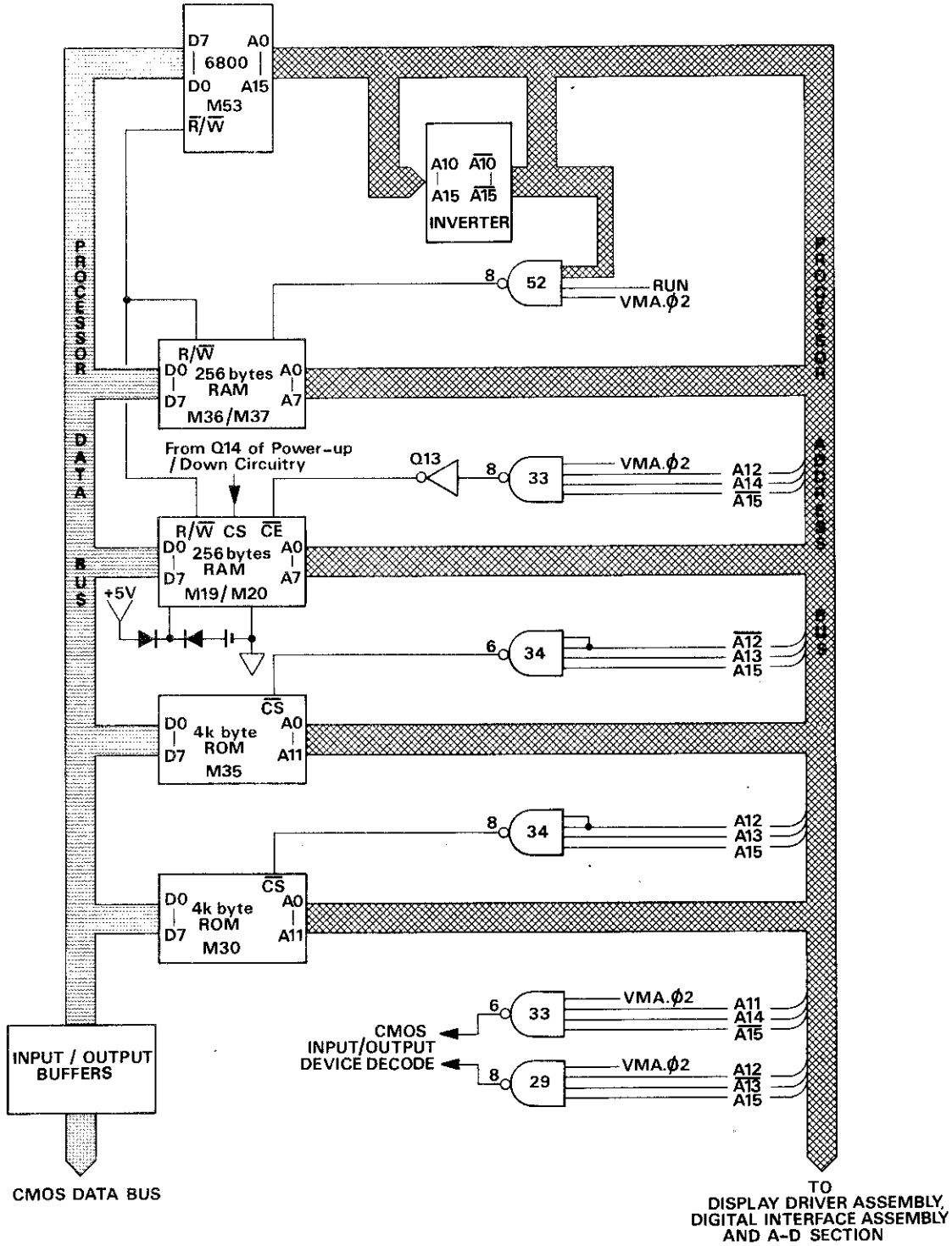

FIG. 3.37 SIMPLIFIED DIAGRAM OF MEMORY CIRCUITS

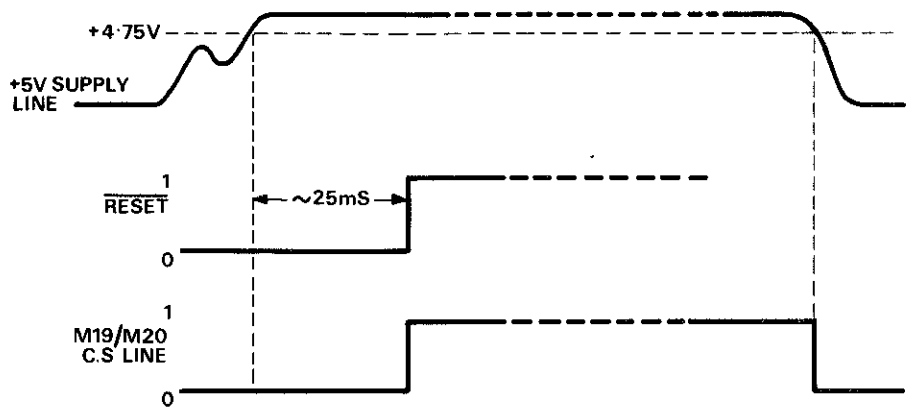

FIG. 3.38 START UP AND NON-VOLATILE RAM PROTECTION

A5	A4	A2	A1	A0	SIGNAL	M32/M16 Pin No.	Operation
0	0	1	X	X	$\overline{XKYBRD}$	M32-7	Keyboard read/write
0	1	X	X	X		(M32-6)	Forces a MPU 'power up' sequence
1	0	1	X	X	$\overline{XADDT}$	M32-5	A-D main counter output enable
1	1	X	X	X		(M32-4)	Analog interface address latch input enable
0	0	X	0	0	$\overline{XKDSP0}$	M16-7	partially enables input to keyboard l.e.d. latches
0	0	X	0	1	$\overline{XKDSP1}$	M16-6	
0	0	X	1	0	$\overline{XKDSP2}$	M16-5	
0	0	X	1	1	$\overline{XKDSP3}$	M16-4	
1	0	X	0	0	$\overline{XADSTA}$	M16-9	A-D, and interupt status output enable
1	0	X	0	1		M16-10	Error switch output enable
1	0	X	1	0	$\overline{XADCTL}$	M16-11	A-D control latches, input enable
1	0	X	1	1	$\overline{XADDLY}$	M16-12	A-D delay counter input enable

FIG. 3.39 CMOS ADDRESS DECODING

3.8.3 Analog to Digital Conversion (Digital Section)

3.8.3.1 General Principle

Block diagram Fig. 3.40 outlines the essentials of the digital section and should be used with flowchart Fig. 3.41 in order to follow the operation of this section.

The function of this section of the circuitry is to generate the sequence that when transferred to the analog section, controls the sequence from RESET through the integration cycle and back to RESET. The circuitry controls the length of SIG and BIAS and counts during REF 1 and REF 2, the accumulated count being proportional to the length of the reference periods, which in turn is proportional to the measured input signal. At the end of each reading cycle the count is read by the MPU, processed and displayed.

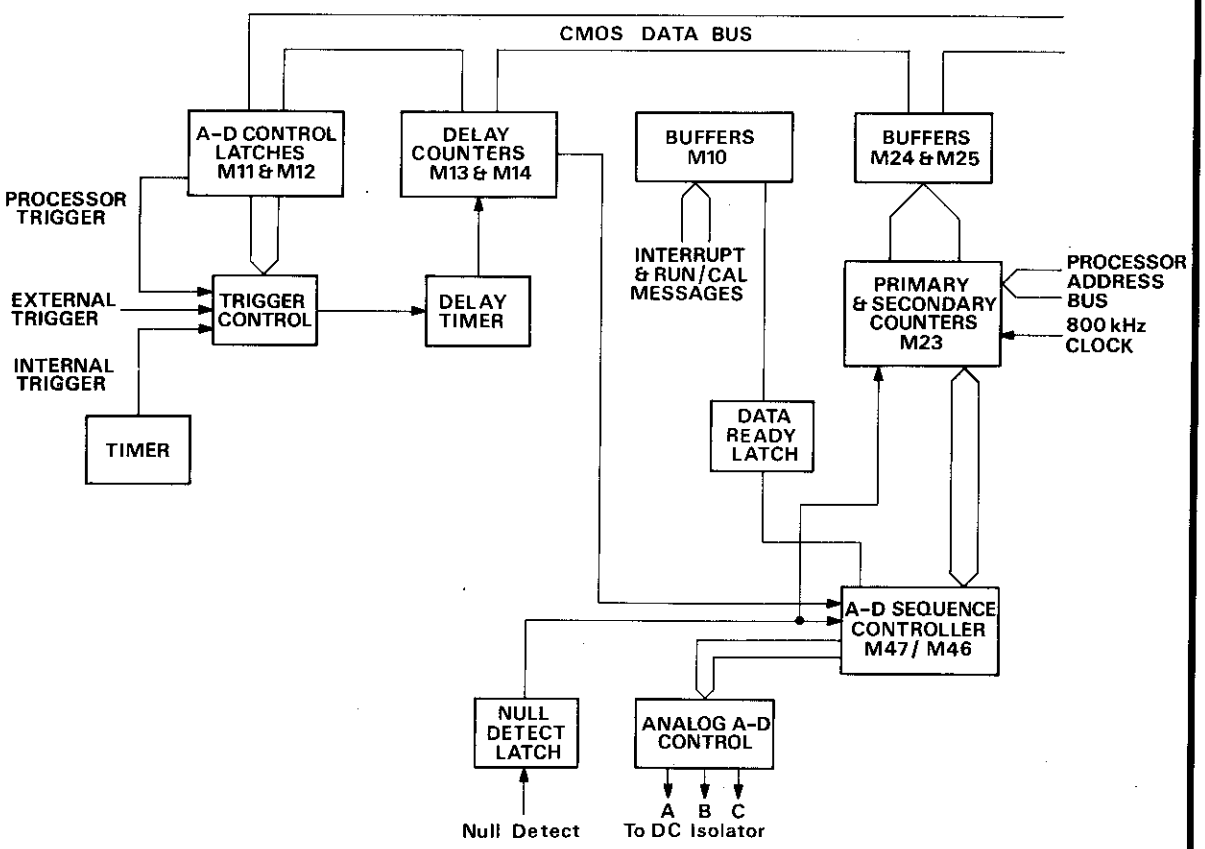

FIG. 3.40 SIMPLIFIED DIAGRAM OF DIGITAL SECTION OF A–D CONVERTER

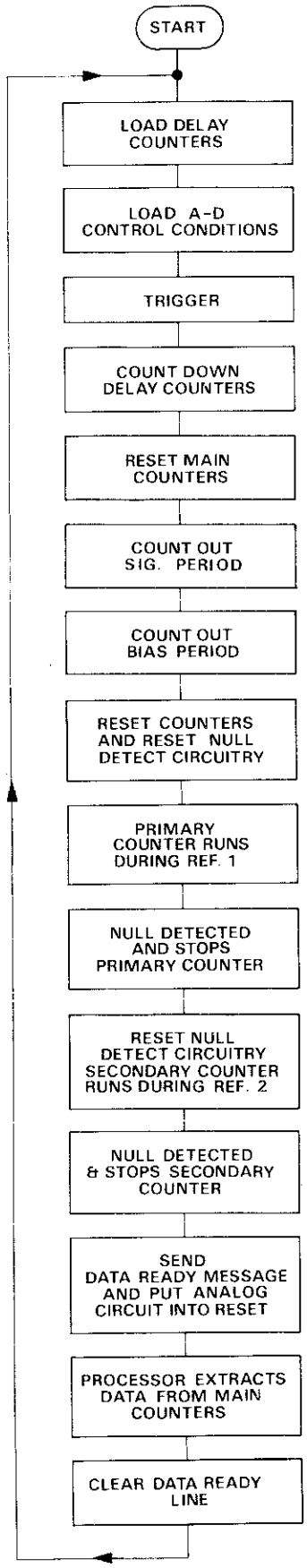

FIG. 3.41 FLOWCHART OF A–D DIGITAL SECTION

SIGNAL	$\overline{A}$	$\overline{B}$	$\overline{C}$
RESET	1	1	0
SYNC	1	1	0
SIG	1	1	1
BIAS	0	1	1
WAIT	0	1	1
REF 1	1	0	1
REF 2	0	0	1
END	1	1	1

FIG. 3.42 A-D ANALOG SEQUENCE CONTROL SIGNALS

3.8.3.2 Preset Procedure

As part of the initialisation routine (at switch on), M47 (used as the sequence controller), is reset from M37-11, causing M47-2 to be logic '1'. Thus the control lines $\overline{A}$, $\overline{B}$ and $\overline{C}$ put the analog section of the A-D into $\overline{\text{RESET}}$ (See Fig. 3.42). The Address Bus decoded signal $\overline{\text{XADDLY}}$ is taken low, enabling the presetting of the delay counters M13 and M14 from the CMOS Data Bus, the amount of delay being determined by the selected range, function and filter state, see Fig. 3.43. The A-D control latches, M11 and M12 are then enabled by $\overline{\text{XADCTL}}$ to (i) reset the command latch M1 (from M11-4), (ii) set the resolution of the main counter (M11-5 and 6), (iii) select trigger gate (M12-3, 4 or 5) and (iv) reset the data ready latch (M12-6).

FUNCTION	1071 COUNT	
	$\overline{\text{FILTER}}$	FILTER
DC Volts	6	101
AC Volts	24	76
DC + AC Volts	24	76
Ohms	6(1)	101(1)
DC Current	6	101
AC Current	24	76
DC + AC Current	24	76

(1) 1MΩ Range $\overline{\text{FILTER}}$: 6, FILTER : 121
10MΩ Range $\overline{\text{FILTER}}$: 32, FILTER : 251

FIG. 3.43 COMMAND DELAYS

3.8.3.3 A-D Measurement Sequence

Trigger. The trigger, required to initiate the measurement sequence, is generated from one of three possible sources:

1. Internally generated 2/second trigger, from timer M61-7.

2. Externally generated trigger, from EXT TRIG on rear panel via M24-13.

3. A MPU derived trigger from M11-3 generated when auto-ranging, pressing MANUAL when HOLD selected, during calibration, an INPUT ZERO sequence, or via the digital interface.

The trigger source is selected by the latched data on M12, enabling one of the three gates of M2.

Delay. The trigger pulse clocks the 'command latch' M1 causing the timer, M15, to output clock pulses (100Hz) to the delay counters (M13 and M14) after a delay of approx. 1.5mS set by C5, R8, R9, R11. The delay counters proceed to count down to zero, at which time the delay latch (M26) is clocked. Thus M26-14 becomes a logic '1', enabling the sequencer M47 (an octal counter) to proceed on to the next step via M46-2.

SYNC. The SYNC phase from the sequencer resets the counters of M23 and places the analog section of the A-D into SIG. The pulse is fed back to M47 via M46-3 to step on the sequencer.

SIG. During the time the SIG line is high (M47-3), the primary counter in M23 is enabled and counts out the signal period (2.5mS superfast or 160mS normal mode). At the end of this period, M23-23 goes high and passes via M46-10 enabling the sequencer to step on once again.

BIAS. The BIAS signal (M47-7) is transferred to the analog section of the A-D by changing the state of the $\overline{A}$ line (M38-9 to a logic '0'). BIAS also enables the secondary counter of M23 to count out the BIAS period (160μs). The signal indicating the end of this period is passed via M46-9 causing the sequencer to carry on to the next step. The BIAS signal also resets the 'delay latch' (M26) ready for the next measurement cycle, and the 'null detector' latch (M22A).

WAIT. The WAIT pulse resets the counter of M23 via M39-10, keeps the $\overline{A}$ line to the analog section low, clocks the polarity null detect latch M22(B) causing a logic '1' on pin 1 if the signal applied to the analog section of the A-D converter was positive (logic '0' if negative) and is fed back to enable the sequencer via M46-3.

REF 1. The high to low edge of WAIT causes the $\overline{A}$ to change state and going into REF 1 makes $\overline{B}$ a logic '0'. The analog side is then in the condition to start 'ramping down'. While REF 1 is high the primary counter of M23 is enabled (pin 3) and counts the period of REF 1.

REF 1 is ended when a null detector pulse is detected and latched on to M22. This causes the sequencer to step on once more from M46-3, the low to high edge from pin 4 disabling the primary counter.

REF 2. The REF 2 signal changes the state of the $\overline{A}$ line (causing the analog section to ramp down at a slower rate), reset the 'null detect' latch and enable the secondary counter of M23 (Pin 13) to count the period of REF 2. If the secondary counter overflows the primary counter is incremented from M26-16.

As in REF 1, a null detector pulse causes the counting period to end (M26-13) and increment the sequencer via M46-3 causing the $\overline{A}$ and $\overline{B}$ lines to change state.

END. The low to high edge from M47-10 is fed back to M47, via M48-6 giving a master reset. Thus the sequencer is placed into RESET.

RESET. The sequence pulse from M47-2 clocks the 'data ready' latch M1-3 placing a signal on to the CMOS Data Bus via tri-state buffer M10 indicating to the MPU that a reading is ready to be taken from the main counter M23. Data is extracted from the counters in three bytes (controlled by the A1 and A0 lines of the processor address bus) with the counter output buffers, M24 and M25 being enabled by $\overline{XADDT}$, a decoded processor address.

The RESET signal is also passed to the analog section of the A-D by changing the state of the C line.

Once the data has been extracted from the main counter the set-up procedure is then repeated to await a further trigger.

3.8.3.4 Master Clock (430329 sheet 4)

The master timing element of the instrument is a crystal controlled Colpitts oscillator. The crystal is chosen to be a binary multiple of the supply frequency to provide an oscillator output of 1.6384MHz (50 or 400Hz supply) or 1.96608MHz (60Hz supply).

3.9 FRONT PCB ASSEMBLY (Circuit Drawing No. 430294)

The Front pcb assembly accepts the measurement signals, digitally displays the value, provides manual control of the measurement circuits and data conditioning, and gives a visual status indication of the selectable instrument states.

3.9.1 Analog Input Signals (430294 sheet 2)

KEY	M7			
	14	15	16	17
	CD7	CD6	CD5	CD4
100	0	0	0	0
10	0	0	0	1
1000	0	0	1	0
10MΩ	0	0	1	1
1	0	1	0	0
.1	0	1	0	1
10Ω	0	1	1	0
AUTO	0	1	1	1
DC	1	0	0	0
kΩ	1	0	0	1
KEYBOARD	1	1	0	1
I	1	1	1	0
INPUT ZERO	1	1	1	1

KEY	M10			
	14	15	16	17
	CD3	CD2	CD1	CD0
HOLD	0	0	0	0
RATIO	0	0	0	1
TEST	0	0	1	0
ERROR	0	0	1	1
(A–B)	0	1	0	0
Av	0	1	0	1
÷C	0	1	1	0
MAX	0	1	1	1
MIN	1	0	0	0
RESET	1	0	0	1
MAN	1	0	1	0
INPUT FILTER	1	1	0	1
AC	1	1	1	1

FIG. 3.44 CMOS DATA BUS : KEY SELECT CODING

The front panel printed circuit board connects the front panel signal input terminals to the 2-4 wire and Local-Remote switches. Thus I+ and I– are wired to the 2-4 wire switch through thermistors R1 and R2 for connection to Hi and Lo if required. Similarly Ω's Guard and Guard may be shortened via the Local/Remote switch.

3.9.2 Display Signals (430294 sheet 1)

The front panel board routes the display signals from the Display Driver board to the gas discharge display.

3.9.3 Keyboard Data Encode (430294 sheet 1)

Selection of a front panel keyswitch causes one of the two 16-key encoders (M7 or M10) to send a data available message to M2 (a data latch) and to remember which key was pressed. The output of M2, (pin 1 or 13) signals the interrupt circuitry of the Digital Board (IRQK1 or IRQK2).

When the microprocessor accepts the interrupt and has located the source, the XKY BRD line to pin 13 of M7 and M10 is taken low, enabling the data outputs of the encoders to be placed on to the CMOS data bus (See Fig. 3.44 for the key select coding). This signal also resets M2 ready for the next key selection.

CMOS DATA LINE	M12/M11	M8/M5	M6/M4	M9
CDO	÷C	DC	AUTO	
CD1	Av	kΩ	10Ω	
CD2	ERROR	INPUT ZERO	.1	
CD3	TEST	INPUT FILTER	1	
CD4	A–B	KEYBOARD	10	
CD5	MIN		100	MAN
CD6	MAX	I	1000	RATIO
CD7	RESET	AC	10MΩ	HOLD

FIG. 3.45 CMOS DATA BUS : LED-SELECT CODING

3.9.4 Keyboard L.E.D. Data Decode (430294 sheet1)

The XKY BRD signal is inverted by Q1, R7, C1, R6 partially enabling the L.E.D. data latches M4, M5, M6, M8, M9, M11 and M12 while information is not being extracted from the keyboard encoders. The data latches are divided into four sets, M6 and M4, M8 and M5, M12 and M11, M9 being fully enabled from the XKD SPØ – XKD SP3 lines respectively.

On initialisation or after a change of the instrument's selectable states, the L.E.D. data latches are updated by placing data on the CMOS Data Bus (See Fig. 3.45), firstly to M8 and M5 (enabled from XKD SP1) and 'clocking' from the CMOS CLK line (J2-6), secondly to M12 and M11 then M9 and finally M6 and M4.

The output of the L.E.D. latches provide the signals to the bases of the L.E.D. drive transistors, switching them on or off as required.

3.10 DISPLAY DRIVER ASSEMBLY (Circuit Drawing 430301).

Basically, the Display Driver assembly receives the display information from the microprocessor (running at 800kHz) and stores it in a Random Access Memory (RAM) digit by digit. This data is then read out at a slower frequency (2kHz), level shifted and output to the gas discharge display.

NOTE: In the following description, each bar, decimal point or legend is referred to as a display segment and each set of segments i.e. ±1, ⊟ or a legend block, is referred to as a display block.

3.10.1 Write Mode

On completion of a reading or when certain modes are selected, (e.g. ERROR, keyboard entry), the processor indicates to the Display Driver Board that data is ready to be transferred by the signal XDDSP (TP6). This causes the RAM (M1) to be placed into its write mode and the quadruple 2-line to 1-line data selector, M9, to select the 'B' inputs which are connected to the processor address bus.

The signal XDDSP also causes the tri-state buffers M6 and M7 to become enabled, causing the data input lines of the RAM to be connected to the processor data bus. Thus under MPU control, the display data (±1, ⊟ 's, decimal points, legends and commas) is written into the RAM.

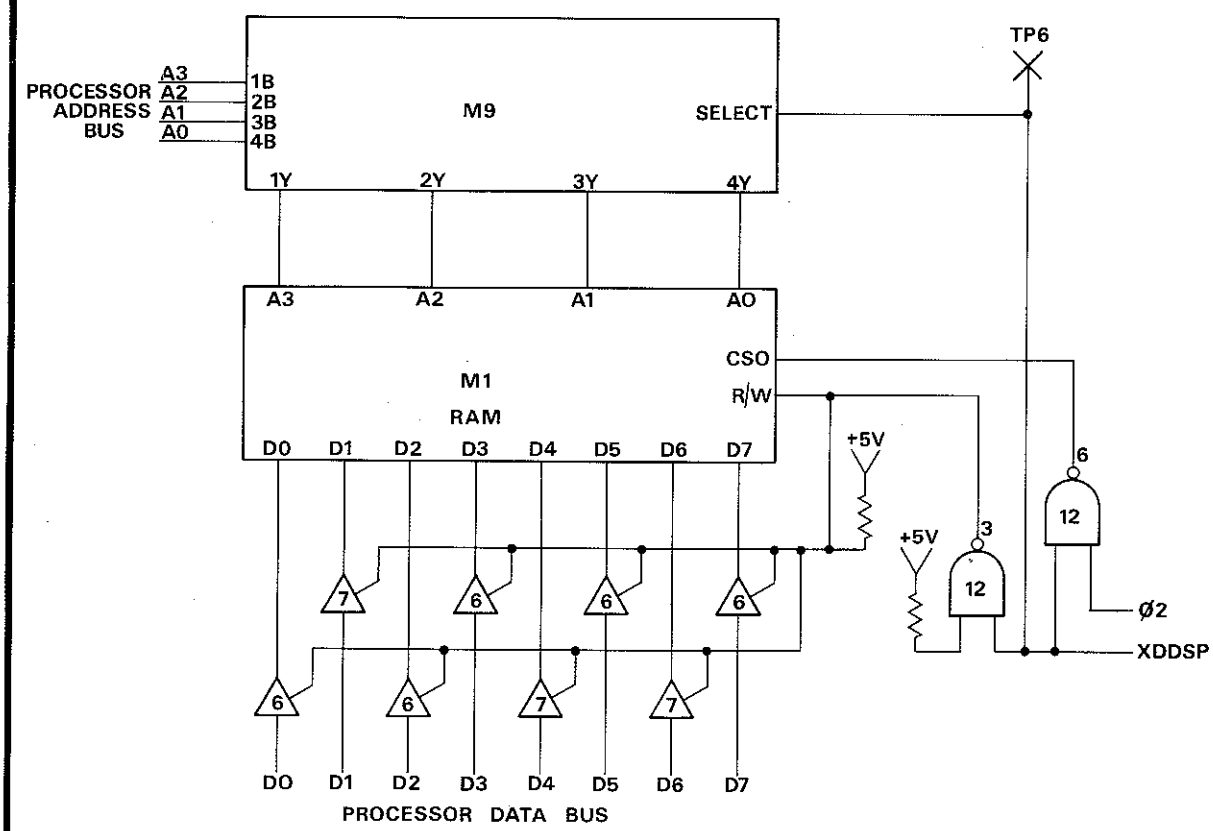

FIG. 3.46 DISPLAY DRIVER WRITE CIRCUITRY

COUNTER (M8)				RAM (M1)				COMMA MULTIPLEXER (M10)				Display block energised or operation implemented from M11
Q_3	Q_2	Q_1	Q_0	A_3	A_2	A_1	A_0	INHIBIT	C	B	A	
0	0	0	0	0	0	0	0	0	0	0	0	1
0	0	0	1	0	0	1	0	0	0	1	0	3
0	0	1	0	0	1	0	0	0	1	0	0	5
0	0	1	1	0	1	1	0	0	1	1	0	7
0	1	0	0	1	0	0	0	1	0	0	0	9
0	1	0	1	1	0	1	0	1	0	1	0	11
0	1	1	0	1	1	0	0	1	1	0	0	} Load comma
0	1	1	1	1	1	1	0	1	1	0	0	} data
1	0	0	0	0	0	0	1	0	0	0	1	2
1	0	0	1	0	0	1	1	0	0	1	1	4
1	0	1	0	0	1	0	1	0	1	0	1	6
1	0	1	1	0	1	1	1	0	1	1	1	8
1	1	0	0	1	0	0	1	1	0	0	1	10
1	1	0	1	1	0	1	1	1	0	1	1	Reset Counter

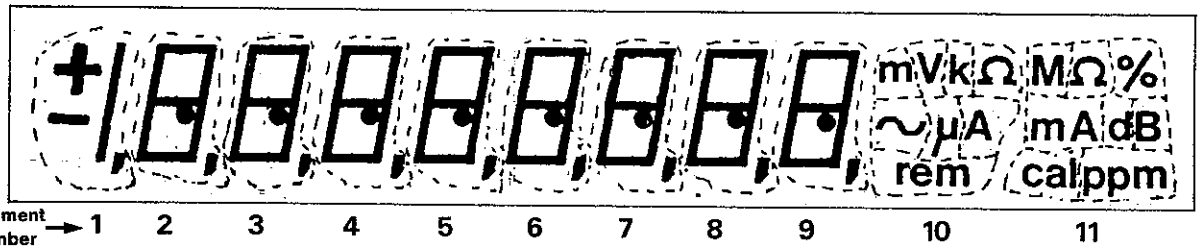

FIG. 3.47 DISPLAY DRIVER READ MODE ADDRESS STATES

Once this transfer of data is complete the RAM becomes deselected, the buffers return to their third state inhibiting the data bus to the RAM and connects the 'A' inputs of M9 to the address lines of the RAM.

3.10.2 Read Mode

Discharge between adjacent display blocks is prevented by time multiplexing and sending information to alternate blocks. A particular display block is selected by driving the anodes, and a particular segment by driving the cathode.

The free running clock M13, R3, R6, C16, produces a 2kHz signal (M13-9) to drive a 4-bit binary counter, M8, which provides the control of the address lines in the read mode (See Fig. 3.48). The display block selection is achieved by decoding these 4 lines into 16 bits using M11. The output lines of M11 are connected to the bases of transistors Q1-Q3, Q13-Q20 which act as anode switches. Note that when the address lines are in the state 0000 the output of M11 (pin 11) selects the anode to block 1, 0001 selects the anode to block 3 (M11-9), 0010 ... block 5, etc., thus the display blocks are selected alternately.

To select the appropriate segment data from the RAM to match the display block selection the address lines are given a left hand bit rotation, i.e. if the output of M8 is labelled DCBA, (2^3, 2^2, 2^1, 2^0), the address input of M1 would be CBAD. (Fig. 3.47 gives the state of the address lines for each display block). The particular display block segment data is recalled by the RAM, buffered by M4 and M5, level shifted −180 volts by R8-R15, C4-C11 causing Q5-Q12 to drive the cathodes, D1-D10 acting as restoration diodes. Between the transfer of each set of segment data, M13-3 is taken high, causing the outputs of M4 and M5 to be a logic '0'. This produces a refresh period for capacitors C4-C11 to discharge from the −180V supply through the restoration diodes. Each '8' display block consists of 7 'digit bars', a decimal point and a comma, thus a total of 9 bits is needed to drive the block. As the 6800 series only has an 8 bit wide data bus, the comma information is treated as an extra word. When the RAM is in its write mode, the last byte transferred from the processor is the comma information (8 bits for segments 1 to 8, See Fig. 3.48).

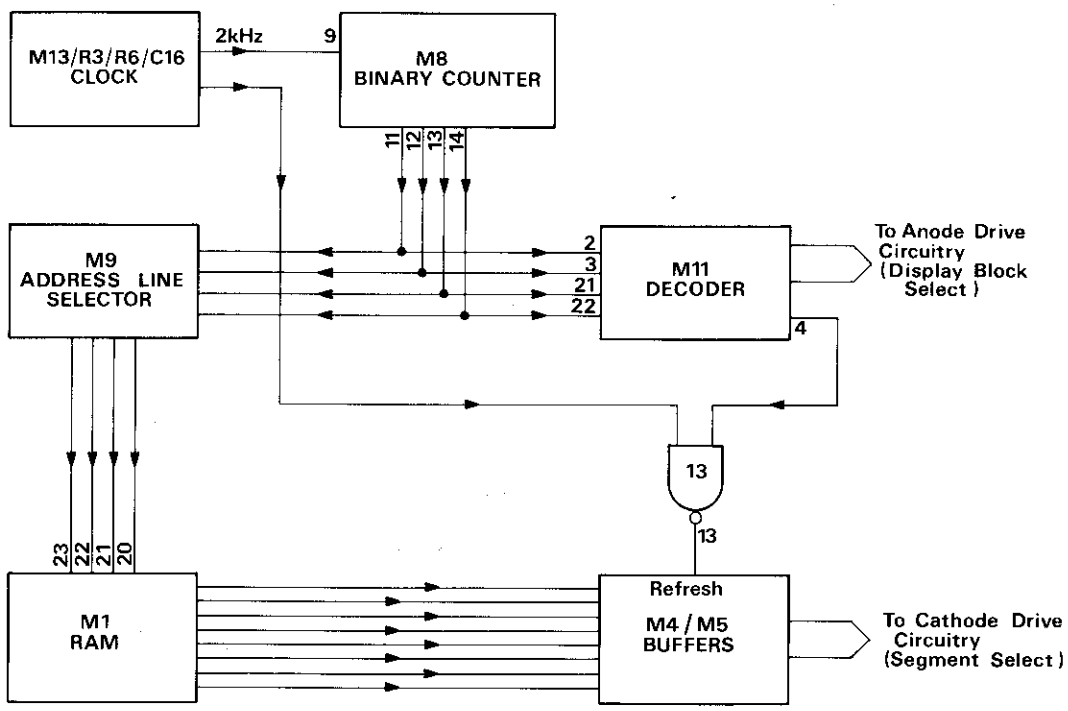

FIG. 3.48 SIMPLIFIED DISPLAY DRIVER READ CIRCUITRY

In the read mode the comma information is transferred from the RAM to latches M2 and M3 (Fig. 3.49) when the RAM address is 1110. So that this information is not sent to the cathodes of the display (it would constitute a display segment combination under the normal cycle), it is inhibited from passing through M4 and M5 from the decoder (M11-4). The previous signal from M11 (pin 5) is delayed by R6, D2, C2 such that when it reaches pin 7 of M4 and M5 it is coincident with that from M11-4, clocking the comma data on to the latches.

The data from the latches is presented to an 8 channel data selector M10, which is also under the control of the binary counter M8. The data selectors output passes into the circuitry described above, thus acting as an extra segment i.e. connected to the comma cathodes.

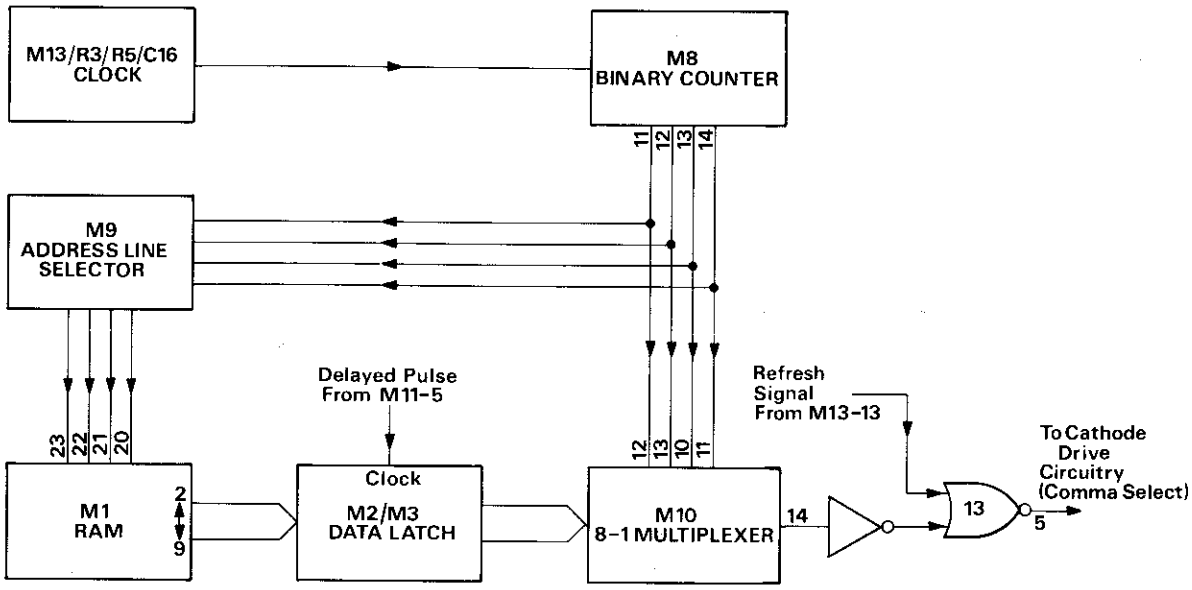

FIG. 3.49 COMMA DISPLAY READ CIRCUITRY

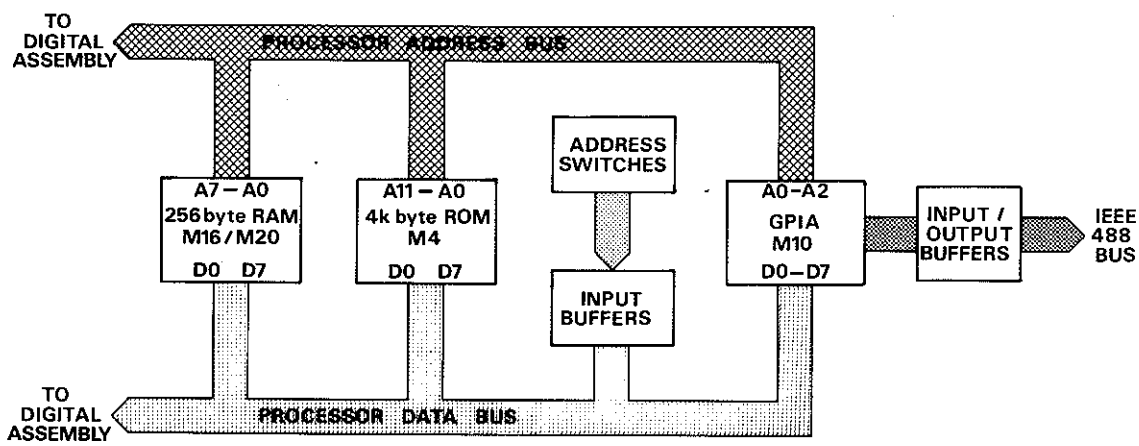

FIG. 3.50 SIMPLIFIED DIAGRAM OF IEEE ASSEMBLY

3.11 IEEE DIGITAL INTERFACE (Circuit Drawing No. 430306)

The IEEE Digital Interface assembly contains the extra memory and circuitry required for the execution and decoding of interface functions, and to perform data input/output transfers. Simplified diagram Fig. 3.50 shows the essential features of this board.

3.11.1 RAM/ROM Circuit

The IEEE Digital Interface assembly acts as an extension to the Digital assembly with connections to both the Processor Address and Data Buses. The board contains 4k bytes of program memory (M4) containing the subroutines to control the instrument from the IEEE 488 Bus. Extra 'Operating ('scratch pad') Memory' is provided by two 256 x 4 bit RAMS (M16, M20). Both the ROM and the RAM's receive the address information, with chip selection being made by decoding address lines A3-A11 with XIOBD.

3.11.2 Interface Circuit

The General Purpose Interface Adapter (GPIA), M10, provides the interface between the IEEE 488 Standard Instrument Bus and the 6800 microprocessor. The MPU can receive, process and send messages to the interface through the GPIA.

The GPIA is able to automatically handle the following interface protocol[1] :–

Single address capability
Source and acceptor handshake
Talker and Listener states
Service Request
Parallel Poll
Device Clear
Device Trigger

With the MPU it is also capable of:–
Programmable Interrupts
Storing the instrument's address
Control of the interface input/output buffers.

The GPIA is selected by decoding address lines A3-A11 with XIOBD. Address lines A0-A2 with the state of the MPU R/$\overline{W}$ line select one of the 8 read-only or 7 write-only registers in the GPIA, enabling the MPU to send or receive data over the interface.

The two signals T/$\overline{R}$1 and T/$\overline{R}$2 are used to control low power transceivers (formed from M1, 2, 5, 6, 8, 9, 11, 12, 13) which drive the interface bus.

[1] For further information refer to 'Getting aboard the 488 Bus' published by Motorola.

3.12 REAR (POWER SUPPLY) PCB ASSEMBLY (Circuit Drawing No. 430295)

3.12.1 General

The line transformer and power supply components are situated at the rear right hand side of the instrument, when viewed from the front. Transformers T1 and T2 are of toroidal construction mounted one on top of the other and bolted to the rear panel. T1 has a split primary comprising two 115V windings, intended for either series or parallel connection depending on the line voltage. An earth screen is interposed between primary and secondary windings to minimise electrostatic coupling, and is grounded to line earth. The second transformer T2 is driven from T1. It also possesses an electrostatic screen, this time being connected to Guard.

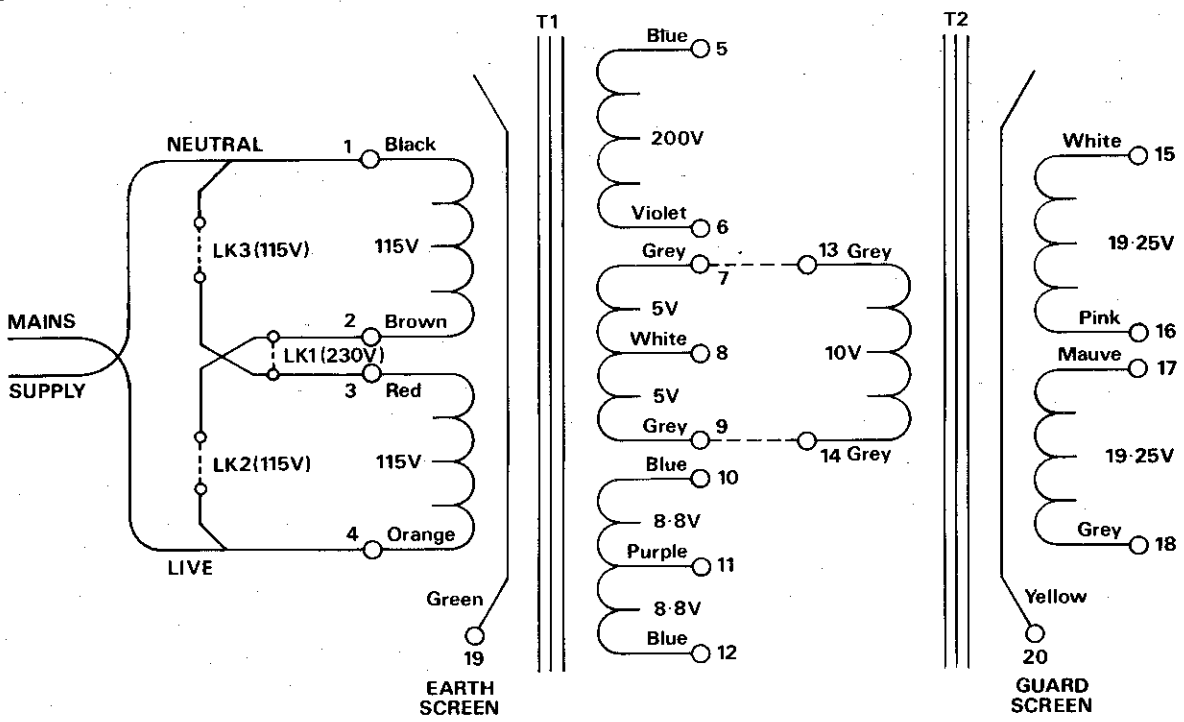

FIG. 3.51 LINE TRANSFORMER

3.12.2 180V Supply

The 180V supply is required for the gas discharge display. Bridge rectifier W1 and C6 convert the 200V AC from the secondary of T1, to DC. R6, D3, R4 and Q2 act as a constant current source being regulated by D4, R5 and Q1. The +5V line (TP2) is connected to the digital +5V line (TP3) on the Display Driver assembly.

3.12.3 5V Supply

All the logic circuitry to the right of the central printed circuit board is powered from the supply generated from the two 8.8 volt 750mA secondary windings on transformer T1. The centre tap (digital common) is referenced to line earth via a 100kΩ resistor, R1 in parallel with a 100nF capacitor, C1. The output of rectifying diodes D1 and D2 is smoothed by C7 and C8 before being fed to regulator M1. This regulator is capable of 1 amp output and has foldback current limiting and thermal shut-down, to provide short-circuit protection.

3.12.4 ±15V Supply

The output of the third secondary winding of transformer T1 (10V AC) is input to the primary of T2. The two 19.25V outputs are connected in series, with the centre tap connected to analog common. The output of bridge rectifier W2 is fed to voltage regulators M2 and M3 (wired in series), to produce positive and negative 15 volt supplies to power the analog circuitry. These regulators also include foldback current limiting and thermal shut-down, to provide short-circuit protection.

3.13 SELF TEST SEQUENCE

Selection of the TEST key places the instrument into a test routine, checking the display and basic measuring circuits. A flowchart for the routine is given in Fig. 3.52. The analog circuitry conditions for each test are given in the last subsection of the circuit description for the particular board, and the range 'F.E.T.' patterns in Appendix 1.

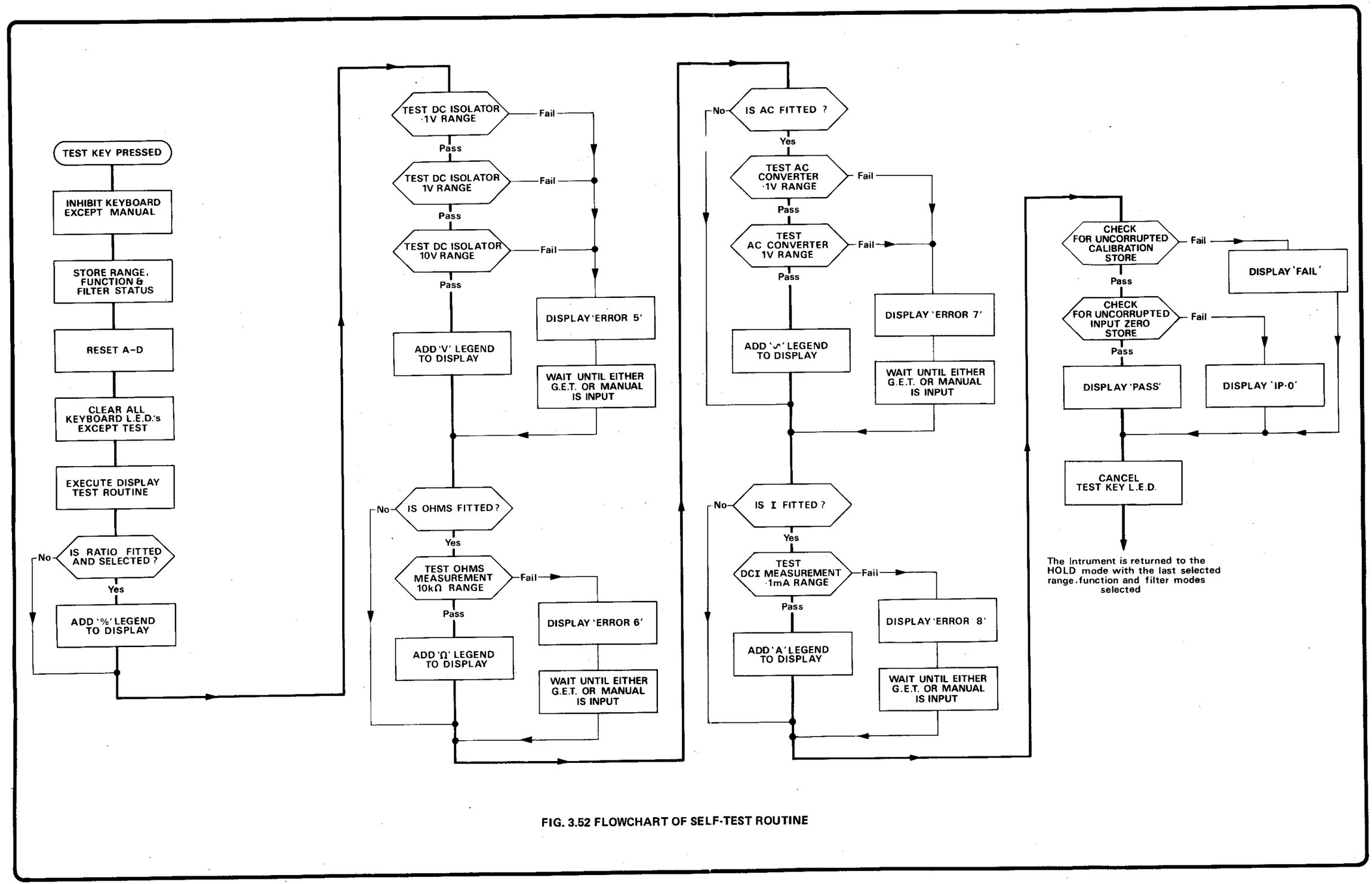

FIG. 3.52 FLOWCHART OF SELF-TEST ROUTINE

SECTION 4

INTERNAL ADJUSTMENT PROCEDURES

4.1 CHANGING LINE VOLTAGE AND LINE FREQUENCY

The instrument is set to 50Hz, 205V to 255V supplies unless Option 80, 81 or 82 is specified. This information is carried on the instrument identification label located on the rear panel. Alteration to a different line voltage/line frequency may necessitate an instrument recalibration.

4.1.1 Changing Line Voltage

1. Disconnect power and all signal input/output leads.
2. Remove the lower cover.
3. Locate the link(s) connecting the split primary on the printed circuit board in front of the toroidal mains transformer, Fig. 2.1 and Drawing No 400295.
4. 115V Operation:– Remove LK1 (link 1) and fit LK2 and LK3[1].
   230V Operation:– Remove links LK2 and LK3, and fit LK1[1].
5. Amend instrument identification label.
6. Replace lower cover.
7. Replace power fuses with 160mA anti-surge (230V) or 500mA anti-surge (115V).
8. Carry out the Specification Verification tests (Section 8, User's Handbook) and recalibrate if necessary.

4.1.2 Changing Line Frequency

1. Disconnect power and all signal input/output leads.
2. Remove the top cover.
3. Change X1, C23, C24 on the Digital assembly (Drawing No 400300) to the values shown below.

50/400Hz	Datron Part Number	Description
X1	800020	1.6384MHz crystal
C23	130059	470pF 500V Ceramic Disc
C24	130015	120pF 160V Polystyrene

60Hz	Datron Part Number	Description
X1	800021	1.96608MHz crystal
C23	102331	330pF 500V Ceramic Disc
C24	130006	82pF 160V Polystyrene

[1] Links should be 22 SWG TIN.Cu wire with silicone rubber sleeving.

4. Amend Instrument identification label.
5. Replace top cover.
6. Carry out the Specification Verification tests (Section 8, User's Handbook) and recalibrate if necessary.

4.2 BATTERY REPLACEMENT

The battery should be replaced on or before the date indicated on the rear panel instrument identification label. To retain the calibration memory, the instrument must be powered-up during replacement. Therefore great care must be taken due to voltages up to 260 volts being present inside the instrument.

1. Remove top cover and locate battery on the Digital assembly (see Fig. 2.1).
2. Power-up instrument.
3. Desolder battery at end of tags and remove from clip.
4. Replace with new battery, (Datron Part No. 920049) positive terminal to resistor.
5. Replace top cover.
6. Amend instrument identification label (Current date + 5 years).
7. Carry out the Specification Verification tests (Section 8, User's Handbook) and recalibrate if necessary.

4.3 POST-REPAIR PROCEDURES

Apart from the RMS Module (which is available only from Datron), all integrated circuits and semiconductor devices are standard manufacturers' products, and special selection is unnecessary. During manufacture certain resistors are selected in value (FSV = Factory Selected Value) to accommodate circuit component tolerances, or to bring the desired setting of a preset control to the middle of its adjustment range.

The thermal tracking of the DC Preamplifier is particularly important, to ensure a low order of zero drift with variations of temperature. This rather time consuming procedure is carried out initially during manufacture, and need only be repeated following replacement of Q12 or any component associated with the temperature compensation circuitry.

NOTE: A routine calibration as detailed in Section 1 should be carried out after completion of the following procedures.

CAUTION : Up to 260 volts is present inside the instrument. Personal contact with these points may result in injury.

4.3.1 Basic DC Instrument

Equipment Requirements:

4½ digit Digital Voltmeter e.g. Datron 1041
Variable 5V, 1 amp DC supply
5mV/division Oscilloscope e.g. Telequipment D83
1MΩ5% resistor in parallel with 10nF capacitor
10MΩ5% resistor in parallel with 10nF capacitor
DC Voltage Calibrator, e.g. Fluke 332D with correction figures.

Procedure:

Power Supplies

1. Turn instrument on and allow 5 minutes warm-up period.

2. Connect DVM Hi to TP8 and Lo to TP28 on the Digital Board. Adjust R2 on the Rear (Power Supply) pcb assembly to give +5.100V ±25mV.

3. Connect DVM Hi to TP1 and Lo to TP20 on the Analog assembly. Adjust R7 on the Rear (Power Supply) pcb assembly to give +15.000V ±15mV.

4. Connect DVM Hi to TP2 and Lo to TP20 on the Analog assembly. Adjust R12 on the Rear (Power Supply) pcb assembly to give −15.000V ±15mV.

Digital Assembly

5. Switch the instrument off and disconnect the power lead.

6. Isolate the Digital Board by removing the connectors along the centre panel (J1-J5).

7. Connect variable 5V supply and DVM Hi's to TP8, Lo's to TP 28. Reduce supply to 4.750 ± 10mV.

8. Set R83 fully clockwise. Connect oscilloscope Lo to TP28 and monitor M53 pin 40. Turn R83 anti-clockwise until TP30 undergoes a high to low transition (or begins to pulse low).

9. Remove variable supply and reconnect items disconnected in steps 5 and 6. Disconnect the oscilloscope. Switch on the instrument.

10. Connect DVM Hi to battery positive terminal, Lo to TP28. Check battery voltage is 2.5 volts.

11. Disconnect DVM and connect oscilloscope Hi to TP25, Lo to TP28. Adjust R11 to give a 10mS ± 1mS period, mark-space ratio 3.5 : 1.5.
NOTE: This signal appears in short 'bursts' every reading.

12. Insert calibration key into keyswitch on the back panel and turn, placing the instrument into CAL mode.
NOTE: The display CAL legend will be lit.

13. Short together pins 'D' and 'E' on Digital assembly.
NOTE: All the calibration store correction factors are now reset to zero.

14. Turn the calibration key back to RUN mode.

Analog Assembly (DC Isolator Section)

15. Centralize R150 and R160.

16. Select 0.1V range DC with FILTER out. Apply a 10MΩ resistor between instrument Hi and Lo. Connect DVM Hi to TP13, Lo to TP20. Adjust FSV R152 with a metal film resistor (50ppm/^{o}C) for a reading of < 10mV, using R159 for 'fine' adjustments. Do not solder in R152.

17. Apply a short circuit across the input terminals and adjust R150 for a reading of<50μV at TP13.

18. Connect DVM Hi to TP33 and adjust R160 for a reading of < 20μV.

19. Repeat steps 16 to 18 until readings are within specified limits.

NOTE: The following step is only required after the replacement of Q12 or any component associated with the temperature compensation circuitry.

20. (i) Re-apply 10MΩ resistor across the input terminals. Note the reading on the front panel display (=A).
    (ii) Note the ambient temperature (=X^{o}C).
    (iii) Place the instrument in a temperature controlled oven at approx 50°C without top cover and with power 'on'.
    (iv) Leave the instrument for at least 1 hour then note the reading on the display (=B) and the temperature of the oven (=Y^{o}C).
    (v) Compute (B–A)/(Y–X) = Drift/^{o}C.
    (vi) Remove instrument from oven and allow to stabilize, with power 'on' to ambient for one hour.
    (vii) If the drift was < 100 digits/^{o}C proceed to (x).
    (viii) For drifts in excess of 100 digits/^{o}C R151 must be adjusted. If the drift was positive turn R151 clockwise, if negative turn R151 anticlockwise.
    (ix) Repeat from (i).
    (x) Lock R151 with a clean soldering iron.
    (xi) Repeat steps 16 to 19.

21. Solder in R152, with instrument turned off.

Analog Assembly (A–D Converter).

22. Select 100V range and apply short circuit between Hi and Lo. Connect DVM Hi to TP7, Lo to TP20. If reading is +6.337V±0.006V proceed to step 24.
6.331 – 6.343

23. Switch off instrument and make positive reference links A to E, if cut i.e. the links alongside TP7. Switch on instrument and measure voltage on TP7 once again. Consult Fig. 4.1 and cut links as indicated. Repeat step 22.

24. Connect DVM Hi to TP8. If reading is –6.337V ± 0.006V proceed to step 26.
–6.331 – (–6.343)

25. Switch off instrument and make negative reference links A to E if cut i.e. the links alongside TP8. Switch on instrument and measure voltage on TP8 once again. Consult Fig. 4.1 and cut links as indicated. Repeat Step 24.

Voltage on TP7 or TP8	TL'A'	TL'B'	TL'C'	TL'D'	TL'E'
6.339	–	–	–	–	–
6.344	–	–	–	–	✓
6.350	–	–	–	✓	–
6.355	–	–	–	✓	✓
6.361	–	–	✓	–	–
6.366	–	–	✓	–	✓
6.372	–	–	✓	✓	–
6.377	–	–	✓	✓	✓
6.383	–	✓	–	–	–
6.388	–	✓	–	–	✓
6.394	–	✓	–	✓	–
6.399	–	✓	–	✓	✓
6.405	–	✓	✓	–	–
6.410	–	✓	✓	–	✓
6.416	–	✓	✓	✓	–
6.421	–	✓	✓	✓	✓
6.427	✓	–	–	–	–
6.432	✓	–	–	–	✓
6.438	✓	–	–	✓	–
6.443	✓	–	–	✓	✓
6.449	✓	–	✓	–	–
6.454	✓	–	✓	–	✓
6.460	✓	–	✓	✓	–
6.465	✓	–	✓	✓	✓
6.471	✓	✓	–	–	–
6.476	✓	✓	–	–	✓
6.482	✓	✓	–	✓	–
6.487	✓	✓	–	✓	✓
6.493	✓	✓	✓	–	–
6.498	✓	✓	✓	–	✓
6.504	✓	✓	✓	✓	–
6.509	✓	✓	✓	✓	✓

Select voltage closest to measured value and cut links

FIG 4.1 REFERENCE SELECTION VOLTAGES

26. Select HOLD. Connect DVM Hi to TP9. Select correct resistance value for F.S.V. R11 or R15 to give a reading of 0V ±1mV. Solder in resistor.

27. Deselect HOLD and disconnect DVM. Select 1000V range and apply +10mV. Connect oscilloscope Lo to TP21, Hi to TP5. Adjust R20 for noisy waveform at zero point.

28. Remove oscilloscope. Replace covers but do not replace screws. Select 10V, DC, filter out and apply 1MΩ across input terminals. Turn rear panel keyswitch to CAL mode and select LIN.

29. Select 1V range and apply 10MΩ across input terminals. Select Ib. Repeat until display reads less than 50 digits.

30. Select 10V range, FILTER and apply short copper link across input terminals. Select ZERO.

31. Apply +10 volts and select GAIN. Repeat until display reads +10.00000 ± 1 digit.

32. Apply +19 volts. If the display reads within the limits +18.99995 to +19.00005, proceed to step 34.

33. Calculated E=(19 - displayed reading)/2.
Reapply +10 volts and adjust R23 for a displayed reading of 10 - E. Repeat steps 31-33 until both readings are within the limits indicated.

34. Turn rear panel keyswitch to RUN mode.
The basic DC only instrument set-up procedure is complete.

4.3.2 Ohms Assembly

Equipment Required :
5½ digit Digital Voltmeter e.g. Datron 1051 or 1061.
10MΩ5% resistor in parallel with 10nF capacitor.
Copper shorting links.

Procedure

1. Centralize R26 and R27. Cut test links TL4 and TL5, and make TL6.

2. Select kΩ, 10kΩ range and set the instrument for 4-wire measurement on the front panel. Connect I– to Ω Guard, I+ to Hi and 10MΩ between Hi and Lo. Connect DVM Hi to TP4, Lo to TP1. Adjust R26 for zero ±300μV.

3. Remove 10MΩ resistor and replace with a short circuit. Connect DVM Hi to 'LO OUT' (J1-5) and adjust R27 for zero ± 2μV.

4. Repeat steps 2 and 3 until readings are within specified limits.

5. Connect Lo to Ω Guard with a short copper link. Connect shorting link between TP1 and TP7. Connect DVM Hi to TL6, Lo to TL1. If reading is <50μV proceed to step 6.
Adjust FSV R40 if > +50μV or FSV R39 if <–50μV.

NOTE: R39, R40 must be ⩾100kΩ.

6. Remove link between TP1 and TP7 and connections on front panel. Reconnect TL4 and TL5. Cut TL6.

The basic Ohms set-up procedure is complete.

4.3.3 AC Assembly

Equipment required:

4½ digit Digital Voltmeter e.g. Datron 1041.
5mV/division Oscilloscope e.g. Telequipment D83.
AC Calibrator e.g. Fluke 5200A.
5:1 asymmetric crest factor signal, 1 volt r.m.s., 0.02% accuracy.

1. Select AC 1000V range and HOLD. Short Hi to Lo. Connect DVM Hi to TL7, Lo to TP8 and note reading. Select 1V range and adjust R121 (bias current) to give same reading ±10μV.

2. Select 100mV range, AC + DC and adjust R112 (offset adjust) for an indication of zero ±50μV on the DVM.

3. Repeat steps 1. and 2. until readings are within the specified limits.

4. Select 10V range and HOLD. Connect oscilloscope Hi to TP5, Lo to TP8 and adjust R90 (rectifier zero) for maximum noise about zero. Remove the oscilloscope.

5. Connect DVM Hi to TP2, Lo to TP8 and adjust R75 (linearity) for an indication on the DVM of 1.8mV ±10%.

6. Select AC, 1V range, FILTER and apply1V 500Hz. Connect DVM Hi to TL5, Lo to TP8. If reading is +3.118V ±0.01V proceed to step 8.

7. Disconnect input signal and switch off instrument. Make links TL1 to TL4 if cut. Switch on instrument, reselect AC, 1V range, FILTER and reapply 1V, 500Hz. Measure voltage on TL5. Consult Fig. 4.2 and cut links as indicated. Check voltage on TL5 is 3.118V ±0.01V. Remove the DVM.

8. Deselect HOLD and short circuit instrument Hi and Lo. Turn rear panel key switch to CAL mode and select ZERO. Repeat for all ranges.

9. Select 1V range. Apply 1 volt (d.c.) and note reading on display. Apply −1 volt (d.c.) and adjust R50 (d.c. turnover) for same display indication ±10 digits.

10. This part of the procedure must be performed with the high frequency compensation voltage, at J1 - 11/R57, at −5V ±0.2V.

    a. Select AC 100V range, FILTER and apply 100V, 500Hz. Select GAIN. Apply 100V, 50kHz and adjust C62 for a display of 100.000V ±20 digits.

Voltage on TL5	TL1	TL2	TL3	TL4
3.118	–	–	–	–
3.138	–	–	–	✓
3.158	–	–	✓	–
3.177	–	–	✓	✓
3.197	–	✓	–	–
3.216	–	✓	–	✓
3.236	–	✓	✓	–
3.255	–	✓	✓	✓
3.275	✓	–	–	–
3.294	✓	–	–	✓
3.313	✓	–	✓	–
3.332	✓	–	✓	✓
3.352	✓	✓	–	–
3.371	✓	✓	–	✓
3.391	✓	✓	✓	–
3.410	✓	✓	✓	✓

Select voltage closest to measured value and cut links

FIG 4.2 AC BOARD OUTPUT SELECTION VOLTAGES

    b. Apply 100V, 100kHz note error and adjust C61 to double the displayed error in the same direction.

    c. Repeat a. and b. until 50kHz and 100kHz displays are within ±20 digits.

    d. Select 1V range and apply 1 volt, 500Hz. Select GAIN. Apply 1V 50kHz and adjust C63 for a display of 1.00000V ±20 digits.

11. Apply 1 volt 5:1 crest factor signal. Adjust R35 (crest factor) for a display of 1.00000V ±30 digits.

12. Open circuit input. Turn rear panel key switch to RUN. Select TEST and check for a display of PASS. Turn rear panel key switch to CAL.

13. Select 10V range and apply 10V, 50kHz. Check display is 10.0000V ±1200 digits. Check that the display can be calibrated to 10.0000 ±20 digits by less than 5 presses of the AcHf key.

14. Select 100mV range and apply 100mV 50kHz. Check display is 100.000mV ±500 digits. Check that display can be calibrated to 100.000mV ±20 digits by less than 5 presses of the AcHf key.

15. Select 1000V range and apply 1000V, 500Hz. Select GAIN.

16. Apply 1000V, 25kHz and check display is 1000.00V ±1200 digits. Check that display can be calibrated to 1000.00V ±20 digits by less than 5 presses of the AcHf key. Remove 1000V and turn rear panel key switch to RUN.

The basic AC set-up procedure is complete.

APPENDIX 1

ANALOG DATA LINE 'F.E.T.' PATTERNS

DC Voltage

Range		DC Isolator							
		AD0	AD1	AD2	AD3	AD4	AD5	AD6	AD7
1	100mV	0	0	0	0	0	1	1	X
2	100mV	0	0	0	0	0	1	1	X
3	IV	0	0	0	0	1	1	1	X
4	10V	0	0	0	0	1	0	1	X
5	100V	0	0	0	0	1	1	0	X
6	1000V	0	0	0	0	1	0	0	X
7	1000V	0	0	0	0	1	0	0	X

AC Voltage

Range		AC Converter							
		AD0	AD1	AD2	AD3	AD4	AD5	AD6	AD7
1	100mV	0	0	1	0	0	0	1	X
2	100mV	0	0	1	0	0	0	1	X
3	1V	0	0	1	0	0	0	0	X
4	10V	0	0	0	1	0	0	0	X
5	100V	0	0	0	0	1	0	0	X
6	1000V	0	0	0	0	0	1	0	X
7	1000V	0	0	0	0	0	1	0	X

DC Coupled AC Voltage

Range		AC Converter							
		AD0	AD1	AD2	AD3	AD4	AD5	AD6	AD7
1	100mV	0	1	1	0	0	0	1	X
2	100mV	0	1	1	0	0	0	1	X
3	1V	0	1	1	0	0	0	0	X
4	10V	0	1	0	1	0	0	0	X
5	100V	0	1	0	0	1	0	0	X
6	1000V	0	1	0	0	0	1	0	X
7	1000V	0	1	0	0	0	1	0	X

Ohms

Range	DC Isolator								Ohms assembly							
	AD0	AD1	AD2	AD3	AD4	AD5	AD6	AD7	AD0	AD1	AD2	AD3	AD4	AD5	AD6	AD7
1 10Ω	0	0	0	0	0	1	1	X	0	0	0	0	0	0	1	X
2 100Ω	0	0	0	0	1	1	1	X	0	0	0	0	0	0	1	X
3 1kΩ	0	0	0	0	1	1	1	X	0	0	0	0	0	1	0	X
4 10kΩ	0	0	0	0	1	1	1	X	1	0	0	0	0	0	0	X
5 100kΩ	0	0	0	0	1	1	1	X	0	0	0	0	1	0	0	X
6 1MΩ	0	0	0	0	1	1	1	X	0	0	1	1	0	0	0	X
7 10MΩ	0	0	0	0	1	1	1	X	0	1	0	1	0	0	0	X

DC Current

Range	DC Isolator								Current assembly							
	AD0	AD1	AD2	AD3	AD4	AD5	AD6	AD7	AD0	AD1	AD2	AD3	AD4	AD5	AD6	AD7
1 100μA	0	0	0	0	0	1	1	X	0	1	0	0	0	0	1	X
2 100μA	0	0	0	0	0	1	1	X	0	1	0	0	0	0	1	X
3 1mA	0	0	0	0	0	1	1	X	1	0	0	0	0	0	1	X
4 10mA	0	0	0	0	0	1	1	X	1	1	1	0	0	0	1	X
5 100mA	0	0	0	0	0	1	1	X	1	1	0	1	0	0	1	X
6 1A	0	0	0	0	0	1	1	X	1	1	0	0	1	0	1	X
7 1A	0	0	0	0	0	1	1	X	1	1	0	0	1	0	1	X

AC Current

Range	AC assembly								Current assembly							
	AD0	AD1	AD2	AD3	AD4	AD5	AD6	AD7	AD0	AD1	AD2	AD3	AD4	AD5	AD6	AD7
1 100μA	0	0	1	0	0	0	1	X	0	1	0	0	0	1	0	X
2 100μA	0	0	1	0	0	0	1	X	0	1	0	0	0	1	0	X
3 1mA	0	0	1	0	0	0	1	X	1	0	0	0	0	1	0	X
4 10mA	0	0	1	0	0	0	1	X	1	1	1	0	0	1	0	X
5 100mA	0	0	1	0	0	0	1	X	1	1	0	1	0	1	0	X
6 1A	0	0	1	0	0	0	1	X	1	1	0	0	1	1	0	X
7 1A	0	0	1	0	0	0	1	X	1	1	0	0	1	1	0	X

DC Coupled AC Current

Range	AC assembly								Current assembly							
	AD0	AD1	AD2	AD3	AD4	AD5	AD6	AD7	AD0	AD1	AD2	AD3	AD4	AD5	AD6	AD7
1 100μA	0	1	1	0	0	0	1	X	0	1	0	0	0	1	0	X
2 100μA	0	1	1	0	0	0	1	X	0	1	0	0	0	1	0	X
3 1mA	0	1	1	0	0	0	1	X	1	0	0	0	0	1	0	X
4 10mA	0	1	1	0	0	0	1	X	1	1	1	0	0	1	0	X
5 100mA	0	1	1	0	0	0	1	X	1	1	0	1	0	1	0	X
6 1A	0	1	1	0	0	0	1	X	1	1	0	0	1	1	0	X
7 1A	0	1	1	0	0	0	1	X	1	1	0	0	1	1	0	X

TEST

Function Tested	Range Checked	DC Isolator								Option assembly							
		AD0	AD1	AD2	AD3	AD4	AD5	AD6	AD7	AD0	AD1	AD2	AD3	AD4	AD5	AD6	AD7
DC	.1	0	0	0	0	0	1	0	1								
	1	0	0	0	0	1	1	0	1								
	10	0	0	0	0	1	0	0	1								
kΩ	10	0	0	0	0	1	1	1	1	Ohms assembly 0	1	0	1	0	0	0	1
AC	.1	Not used								AC assembly 0	0	1	0	0	0	1	1
	1									0	0	1	0	0	0	0	1
I	.1	0	0	0	0	0	1	1	1	I assembly 0	1	0	0	0	0	1	1

DESIGNATOR	DATRON PART No.	DESCRIPTION	PRINCIPAL MANUFACTURER	MANUFACTURER'S PART No.	No. USED Per Assy.
R1	090001	P.T.C. THERMISTOR	MULLARD	VA8650	2
R2	090001	P.T.C. THERMISTOR	MULLARD	VA8650	—
R3	000151	150 Ω 1/4 W CARBON	MULLARD	CR25	8
R4	000151	150Ω " " "	"	"	—
R5	000151	150Ω " " "	"	"	—
R6	000102	1K 1/4 W. CARBON	"	CR25	2
R7	000104	100K 1/4 W. CARBON	MULLARD	CR25	1
R8	000151	150Ω 1/4 W. CARBON	MULLARD	CR25	—
R9	000151	150Ω " " "	"	"	—
R10	000151	150Ω " " "	"	"	—
R11	000151	150Ω " " "	"	"	—
R12	000151	150Ω " " "	"	"	—
R13	000102	1K " " "	"	"	—
R14	000472	4K7 " " "	"	"	1
AN1	090032	150R x 7 2% NETWORK	BECKMAN	764-1-R150	2
AN2	090032	" " " "	"	"	—
C1	102101	100PF CER DISC	ERIE	801	1
C2	150002	10 μF 20% 16V DIP TANT	UNION CARBIDE	K10E16	2
C3	150016	1.0 μF 20% 35V "	UNION CARBIDE	K1R0E35	2
C4	101103	0.01μF 250V CER DISC	ERIE	801	3

NOTES. CIRCUIT DIAG 430294
CHECK PROC. 460294
CHECK LIST 470294
SEE SHEET 2 FOR LATEST ISSUE

	11	12	13
	1661	1815	1823
	10.9.84	10.1.85	23-1-85
	MD	MD	MD

ISS	C	D	1 C	2	3	4 C	5	6	7	8	9	10
E.C.O.	—		RELEASED	ECO 778	816/818	867	888	1111	1213	1352	1472	1662
DATE	—	17-8-78	29-9-78	6-12-78	25-JAN 79	11 JUN 79	26 OCT 79	21.4.80	11-6-81	1.7.82	2.6.83	6.8.84
CHKD	—	MD	MD	MD	MD	MD	MD	MD	MD	MD	MD	MD

DATE 28-4-78
DRAWN B.J.
CHECKED
APPROVED
DATE

datron ELECTRONICS LTD

TITLE 1061/1071/1081 FRONT P.C.B. ASSY

DRAWING NUMBER 400294 SHEET 2 OF 6

DESIGNATOR	DATRON PART No.	DESCRIPTION	PRINCIPAL MANUFACTURER	MANUFACTURER'S PART No.	No. USED Per Assy.
C5	101103	0.01μF. 250V CER DISC	ERIE	801	—
C6	150016	1.0 μF 20% 35V DIP TANT	UNION CARBIDE	K1R0E35	—
C7	101103	0.01μF 250V CER DISC	ERIE	801	—
C8	150002	10μF 20% 16V. DIP. TANT	UNION CARBIDE	K10E16	—
C9	104023	2n2F 20% 1KV CER DISC	ITT	HD16K102N2M5-SS1K0DSC	1
C10		NOT USED			
C11	150006	4μ7 20% 16V DIP TANT	UNION CARBIDE	K4R7E16	1
Q1	240001	Si NPN	NATIONAL	BC184K	6
Q2	240001	Si NPN	NATIONAL	BC184K	—
Q3	240001	" "	"	"	—
Q4	240001	" "	"	"	—
Q5	240001	" "	"	"	—
Q6	240001	" "	"	"	—
M1	290042	G.P. HIGH CURRENT TRANS ARRAY	R.C.A.	CA3081P	3
M2	280011	DUAL D FLIP-FLOP	MOTOROLA	MC14013 BCP	1
M3	290042	G.P. HIGH CURRENT TRANS ARRAY	R.C.A	CA3081P	—
M4	280015	QUAD LATCH	MOTOROLA	MC14076	7

NOTES.

SEE SHEET 2 FOR LATEST ISSUE

ISS												
E.C.O.												
DATE												
CHKD.												

DATE
DRAWN B.J.
CHECKED
APPROVED
DATE

datron ELECTRONICS LTD

TITLE 1061/71/81 FRONT. P.C.B. ASSY.

DRAWING NUMBER 400294 SHEET 3 OF 6

DESIGNATOR	DATRON PART No.	DESCRIPTION	PRINCIPAL MANUFACTURER	MANUFACTURER'S PART No.	No. USED Per Assy.
M5	280015	QUAD LATCH	MOTOROLA	MC14076	—
M6	280015	" "	"	"	—
M7	280067	16WAY. KEYBOARD ENCODER	NATIONAL	MM74C922	2
M8	280015	QUAD LATCH	MOTOROLA	MC14076	—
M9	280015	QUAD LATCH	"	"	—
M10	280067	16 WAY. KEYBOARD ENCODER.	NATIONAL	MM74C922	—
M11	280015	QUAD LATCH	MOTOROLA	MC14076	—
M12	280015	" "	"	"	—
M13	290042	G.P. HIGH CURRENT. TRANS ARRAY	RCA	CA3081P	—
S1	700019	SLIDE SWITCH	SIEMENS	C-42315-A60-A1	2
S2	700019	" "	"	"	—
S3	700061	KEYBOARD SWITCH. RED. LED	SCHADOW	SRL-RED LED	24
S4	700061	" " " "	"	" " "	—
S5	700061	" " " "	"	" " "	—
S6	700061	" " " "	"	" " "	—
S7	700061	" " " "	"	" " "	—
S8	700061	" " " "	"	" " "	—
S9	700061	" " " "	"	" " "	—
S10	700062	KEYBOARD SWITCH. GREEN LED	SCHADOW	SRL - GREEN LED	2

NOTES.

SEE SHEET 2 FOR LATEST ISSUE

ISS												
E.C.O												
DATE												
CHKD												

DATE

DRAWN B.J.

CHECKED

APPROVED

DATE

datron ELECTRONICS LTD

TITLE 1061/71/81 FRONT. P.C.B ASSY

DRAWING NUMBER 400294

SHEET 4 OF 6

DESIGNATOR	DATRON PART No.	DESCRIPTION	PRINCIPAL MANUFACTURER	MANUFACTURER'S PART No.	No. USED Per Assy.
S11	700061	KEYBOARD. SWITCH. RED. LED.	SCHADOW	SRL - RED LED	—
S12	700061	" " " "	"	" " "	—
S13	700061	" " " "	"	" " "	—
S14	700061	" " " "	"	" " "	—
S15	700061	" " " "	"	" " "	—
S16	700061	" " " "	"	" " "	—
S17	700061	" " " "	"	" " "	—
S18	700061	" " " "	"	" " "	—
S19	700061	" " " "	"	" " "	—
S20	700061	" " " "	"	" " "	—
S21	700061	" " " "	"	" " "	—
S22	700061	" " " "	"	" " "	—
S23	700061	" " " "	"	" " "	—
S24	700061	" " " "	"	" " "	—
S25	700061	" " " "	"	" " "	—
S26	700061	" " " "	"	" " "	—
S27	700061	" " " "	"	" " "	—
S28	700062	KEYBOARD SWITCH. GREEN. LED.	SCHADOW	SRL-GREEN LED	—

NOTES.

SEE SHEET 2 FOR LATEST ISSUE

ISS												
E.C.O												
DATE												
CHKD												

DATE

DRAWN B.J

CHECKED

APPROVED

DATE

datron ELECTRONICS LTD

TITLE 1061/71/81 FRONT. P.C.B. ASSY

DRAWING NUMBER 400294

SHEET 5 OF 6

DESIGNATOR	DATRON PART No.	DESCRIPTION	PRINCIPAL MANUFACTURER	MANUFACTURER'S PART No.	No. USED Per Assy.
	400573	SIGNAL CABLE ASSY			1
	450451-2	RM10 INSULATOR.			1
	410090-7	PRINTED CIRCUIT BOARD			1
	450179-1	TERMINAL PLATE.			1
	605060	IC. SOCKET 14 WAY	AUGAT	314-AG-39D	1
	605061	IC. SOCKET 16 WAY	AUGAT	316-AG-39D	10
	605062	IC. SOCKET 18 WAY	AUGAT	318-AG-39D	2
	630099	MASKING TAPE	3M		A/R
	630024	INSULATING BEADS			8
	800017	8½ DIGIT DISPLAY	DALE		1
	920015	LOW. E.M.F. TERM. BLK/BLK	CLIFF	TP1 - SPECIAL	1
	920041	" " " BLK/RED	CLIFF	" "	1
	920042	NOT LOW E.M.F. TERM BLK/WH	"	TP1	1
	920043	" " " " BLK/BRN	"	"	1
	920044	" " " " BLK/BLUE	"	"	1
	920045	" " " " BLK/YELLOW	"	"	1
	630029	DOUBLE SIDED PRESSURE SENSITIVE TAPE.	3M	TYPE 4032	290mm
	420080-1	WARNING LABEL			1

NOTES.

SEE SHEET 2 FOR LATEST ISSUE

ISS.												
E.C.O.												
DATE												
CHKD.												

DATE

DRAWN B.J.D

CHECKED

APPROVED

DATE

datron ELECTRONICS LTD

TITLE 1061/71/81 FRONT. P.C.B. ASSY.

DRAWING NUMBER 400294

SHEET 6 OF 6

DESIGNATOR	DATRON PART No.	DESCRIPTION	PRINCIPAL MANUFACTURER	MANUFACTURER'S PART No.	No. USED Per Assy.
R1		NOT USED			–
R2	066200	20R POT 3/8 SQ VERT. CERMET.	BECKMAN	72XW	1
R3	000221	220R 5% 1/4W CARBON.	MULLARD	CR25	1
R4	014320	432R 1% M.F.	HOLCO	H.8	1
R5	000102	1K 5% 1/4W CARBON	MULLARD	CR25	2
R6	001184	180K 5% 1/2W CARBON	MULLARD	CR37	1
R7	066102	1K 3/8" RIGHT ANGLED CER. POT.	BECKMAN	72XW	1
R8	014021	4K02 1% 1/8W M.F.	HOLCO	H.8.	1
R9	019091	9K09 1% 1/8W M.F.	HOLCO	H.8.	1
R10	012001	2K 1% 1/8W M.F.	HOLCO	H.8.	1
R11	011302	13K 1% 1/8W M.F.	HOLCO	H.8.	1
R12	066501	500R 3/8" RIGHT ANGLED CER. POT	BECKMAN	72XW	1
R13.	000102	1K 5% 1/4W CARBON.	MULLARD	CR25	–
L1	370001	10μH 0·85Ω R.F. CHOKE.	PLESSEY	SB/10/0011/10	3
L2	370001	10μH " "	"	"	–
L3	370001	10μH " "	"	"	–
C1	NOT USED				–
C2	NOT USED.				–
C3	NOT USED.				–

NOTES. CIRCUIT DIAG. 430295.
CHECK PROC. 460295.
CHECK LIST. 470295.
SEE SHEET 2 FOR LATEST ISSUE

ISS.	C	D	1	2	3	4	5	6	7	8	9	10	11	12
E.C.O.	–	–	RELEASED	ECO783	E.C.O BIG	[illegible]	[illegible]	[illegible]	1491	1452	1470	1517	1529	1688
DATE	–	22-8-78	29-9-78	8-12-78	25 JAN 79	6. JUN 79	31-10-79	21. 4. 80	11-2-83	16.2.83	1.6.83	16·8·83	15·9·83	20.8.84
CHKD	–	MD		MD	MD	MD	MD	MD	MD	MD	MD	MD	MD	MD

DATE 2-5-78
DRAWN B.J.
CHECKED M.H.
APPROVED
DATE

datron ELECTRONICS LTD

TITLE 1061 / 1071 / 1081 REAR P.C.B. ASSY.

DRAWING NUMBER 400295 SHEET 2 OF 6

DESIGNATOR	DATRON PART No.	DESCRIPTION	PRINCIPAL MANUFACTURER	MANUFACTURER'S PART No.	No. USED Per Assy.
C4		NOT USED			
C5	101103	0·01μF 250V CER DISC	ERIE	801	3
C6	180026	10μF 350V ELECT	ITT	EN12/12 10/350	1
C7	180004	4700μF 16V AL. ELECT	WIMA	PRINTILYT	1
C8	104026	47nF +50 −20 % 50V CER DISC	SIEMENS	B37449	1
C9	150003	47μF 20% 6V3 DIP. TANT	UNION CARBIDE	K47E6V3	1
C10	150021	22μF 20% 25V DIP. TANT	UNION CARBIDE	K22E25	2
C11	150021	" " " "	" "	"	–
C12	101103	0·01μF 250V. CER. DISC.	ERIE	801	–
C13	180025	1000μF 35V ELECT.	WIMA	PRINTILYT	2
C14	101103	0·01μF 250V. CER DISC	ERIE	801	–
C15	180025	1000μF 35V ELECT	WIMA	PRINTILYT	–
C16	102102	1nF 10% 500V CER DISC	ITT	CD10.	1
D1	200022	Si RECTIFIER 3A 400V	MOTOROLA	BY252	2
D2	200022	" " "	" "	"	–
D3	210068	6V8 400mW ZENER	MULLARD	BZY88C6V8	1
D4	213004	180V 500mW ZENER	MOTOROLA	1N5279B	1

NOTES.

SEE SHEET 2 FOR LATEST ISSUE

ISS.												
E.C.O.												
DATE												
CHKD.												

DATE 2-5-78
DRAWN B.J.
CHECKED M.H.
APPROVED
DATE

datron ELECTRONICS LTD

TITLE 1061/71/81 REAR P.C.B ASSY.

DRAWING NUMBER 400295 SHEET 3 OF 6

DESIGNATOR	DATRON PART No.	DESCRIPTION	PRINCIPAL MANUFACTURER	MANUFACTURER'S PART No.	No. USED Per Assy.
Q1	240018	300V. N.P.N. TRANSISTOR	MOTOROLA	MJE 340	2
Q2	240018	" " "	"	"	—
M1	260068	5V 1½A REGULATOR	NATIONAL	LM309K/ALUM	1
M2	260024	POSITIVE VOLTAGE REGULATOR	FAIRCHILD	μA78MGUIC	1
M3	260023	NEGATIVE VOLTAGE REGULATOR	FAIRCHILD	μA79MGUIC	1
W1	209014	1A5 400V BRIDGE RECT	MICRO-ELECTRONICS	W004	1
W2	209003	100V. 1.5A BRIDGE RECT	MICRO-ELECTRONICS	W001	1
J1					
J2	620003	SOLDER PCB TERMINAL LUG	HARWIN	H2105A	5
J3	604033	4 WAY FLAT GOLD WAFER PIN	MOLEX	22-27-2041/GOLD	17
J4	604033	" " " " "	"	" " "	—
J5	604033	" " " " "	"	" " "	—

NOTES.

SEE SHEET 2 FOR LATEST ISSUE

ISS.												
E.C.O.												
DATE												
CHKD												

DATE 2-5-78
DRAWN B.J.
CHECKED MLH
APPROVED
DATE

datron ELECTRONICS LTD

TITLE 1061/71/81 REAR P.C.B. ASSY.

DRAWING NUMBER 400295 SHEET 4 OF 6

DESIGNATOR	DATRON PART No.	DESCRIPTION	PRINCIPAL MANUFACTURER	MANUFACTURER'S PART No.	No. USED Per Assy.
J6	604033	4 WAY FLAT GOLD WAFER PIN	MOLEX	22-27-2041/GOLD	—
J7	604033	" " " " "	"	"	—
J8					
J9	604033	4 WAY FLAT GOLD WAFER PIN	MOLEX	22-27-2041/GOLD.	—
J10	604033	" " " " "	"	"	—
J11	604033	" " " " "	"	"	—
J12	604033	" " " " "	"	"	—
J13	604033	" " " " "	"	"	—
J14					
	410091-5A	PRINTED CIRCUIT BOARD			1
	450180-2	HEATSINK 5V	ADVANCE		1
	450183-1	HEATSINK 15V	ADVANCE		3
	540002	22SWG TIN CU WIRE			A/R
	512999	7/·2 PTFE WIRE WHITE		BSG210 TYPE C	A/R
	611037	SCREW M3x8mm. NYLON HEX.HD.	NYLON & ALLOYS		8
	613005	WASHER. M3 INT/SHAKEPROOF. ST.	GKN DISTRIBUTORS		4
	613017	WASHER M3 FLAT NYLON	NYLON & ALLOYS.		8
	615002	NUT. M3 FULL HEX STEEL	GKN	ZINC PLATED	4
	615008	NUT. M3 FULL HEX NYLON	GKN		2

NOTES.

SEE SHEET 2 FOR LATEST ISSUE

ISS												
E.C.O												
DATE												
CHKD												

DATE 2-5-78
DRAWN B.J.
CHECKED MLH
APPROVED
DATE

datron ELECTRONICS LTD

TITLE 1061/71/81 REAR P.C.B. ASSY

DRAWING NUMBER 400295 SHEET 5 OF 6

DESIGNATOR	DATRON PART No.	DESCRIPTION	PRINCIPAL MANUFACTURER	MANUFACTURER'S PART No.	No. USED Per Assy.
	611016	SCREW M3x 8mm STEEL PDZ PAN ZINC PL.	GKN		6
	618007	MELINEX WASHERS 12·7X 16·5X0·05mm.	JERMYN.	J26-5001	2
	620007	TEST POINT TERMINAL	MICROVAR	C30	9
	618001	INSULATING BUSH	JERMYN	A1218	2
	618009	INSULATING PAD SIL TO3	WARTH	3223-07FR-06	1
	590004	SLEEVE - PTFE	HELLERMANN ELECTRIC	FE10	A/R.
	900004	SILICONE RUBBER COMPOUND	R.S.	554-119.	A/R
	420080-1	WARNING LABEL			2
	613029	M3 CRINKLE WASHER SS			2
	613009	4BA SOLDER TAG BRASS	TIN PL.		2
	590001	SLEEVE MAX. CABLE Ø3·0	HELLERMANN ELECTRIC	H15x20mm BLACK HELSYN	3
	590006	HEATSHRINK SLEEVE Ø2·4 INT	RS OR HELLERMANN ELECTRIC	399-495 OR LVR24	20mm
	630024	STEATITE BEAD 16 SWG	PARK ROYAL PORCELAIN	Nº 2	2

NOTES.

SEE SHEET 2 FOR LATEST ISSUE

ISS.												
E.C.D.												
DATE												
CHKD.												

DATE 2-5-78	datron ELECTRONICS LTD
DRAWN B.J.	TITLE 1061/71/81 REAR P.C.B ASSY
CHECKED MHH	
APPROVED	
DATE	DRAWING NUMBER 400295 — SHEET 6 OF 6

DESIGNATOR	DATRON PART No.	DESCRIPTION	PRINCIPAL MANUFACTURER	MANUFACTURER'S PART No.	No. USED Per Assy.
J2	572115 /C	16 WAY RIBBON CABLE ASSY	DATRON		1
J3	604035	4CCT. RIGHT ANGLED WAFER. GOLD.	MOLEX	22-12-2041	5
J4	604035	" " " "	"	"	—
J6	604035	" " " "	"	"	—
	410092-5A	P.C.B.			1
J1 & J5	604036	STRIP OF 10 AMP PINS	AMP	163740-8	4
	630023	SCOTCHFLEX ADHESIVE CLIP	3M	CLIP 706	1
	630099	25mm MASKING TAPE	3M	SCOTCH N.230	A/R.
	620007	TEST POINT TERMINAL	MICROVAR	C 30	2
R1	000473	47K 5% ¼W CARBON	MULLARD	CR25	2
R2	000473	47K " " "	"	"	—
D1	200002	Si RECTIFIER 1A 50V	FAIRCHILD	IN4001	2
D2	200002	" " " "	"	"	—

NOTES CIRCUIT DIAGRAM . 430296
CHECK PROC. . 460296.
CHECK LIST . 470296.
SEE SHEET 2 FOR LATEST ISSUE

ISS	C	D	1	2	3	4	5	6	7	8
ECO	—	—	RELEASED	ECO784	ECO849	867/904	992	1000	1102	1217
DATE	—	25-8-78	29-9-78	6-12-78	4-5-79	11-6-79	25-10-79	18.1.80	14.4.80	18.8.81
CHKD	—	MD		MD	MD	MD	MD	MD	MD	MD

DATE 2-5-78
DRAWN B.J.
CHECKED
APPROVED
DATE

datron ELECTRONICS LTD

TITLE 1061/71/81 CENTRE P.C.B. ASSY

DRAWING NUMBER 400296 SHEET 2 OF 2

J.W. 1164

DESIGNATOR	DATRON PART No.	DESCRIPTION	PRINCIPAL MANUFACTURER	MANUFACTURER'S PART No.	No. USED Per Assy.
J2	604035	RIGHT ANGLED WAFER PIN. GOLD.	MOLEX	22-12-2041	12
J3	604035	" " " " "	"	"	—
J4	604035	" " " " "	"	"	—
J5	604035	" " " " "	"	"	—
J6	604035	" " " " "	"	"	—
	410093-4	PRINTED CIRCUIT BOARD			1
	510111	7/0·2 BROWN WIRE			120 mm
J1 & J7	604036	STRIP OF 10 AMP PINS	AMP	163740-8	2
	605053	12 WAY POLARISED SOCKET	MOLEX	22-01-2125	2
	605057	GOLD CRIMP PINS	MOLEX	4809-GL	7
	606004	PLASTIC POLARISING PEG	MOLEX	4161-1	4
	540002	22 S.W.G. TIN.CU WIRE			A/R
	590001	SLEEVE MAX CABLE Ø3·0	HELLERMANN ELECTRIC	H15 x 20mm BLK HELSYN	1

NOTES. CIRCUIT DIAGRAM . 430297.
CHECK PROC. . 460297.
CHECK LIST . 470297.
SEE SHEET 2 FOR LATEST ISSUE

ISS	C	D	1	2
ECO	-	-	RELEASED	867
DATE	-	24-8-78	29-9-78	11-6-79
CHKD	-	MD		MD

DATE 28-4-78
DRAWN B.J.
CHECKED
APPROVED
DATE

datron ELECTRONICS LTD

TITLE 1061/71/81 L.H. PCB ASSEMBLY

DRAWING NUMBER 400297 SHEET 2 OF 2

J.W. 1164

DESIGNATOR	DATRON PART No.	DESCRIPTION	PRINCIPAL MANUFACTURER	MANUFACTURER'S PART No	No. USED Per Assy.
R1	000334	330K 5% 1/4W CARBON	MULLARD	CR25	2
R2	000334	" " " "	"	"	–
	410094-4A	P.C.B.			1
	540002	22SWG TIN. CU. WIRE.			A/R
J2	574270/C	24WAY RIBBON CABLE ASSY	DATRON		1
J1 & J3	604036	STRIP OF 10AMP PINS	AMP	163740-8	4
	590001	SLEEVE MAX CABLE Ø 3·0	HELLERMANN ELECTRIC	H15x20mm BLK HELSYN	2
	630099	25mm MASKING TAPE.	3M	SCOTCH N.230	A/R

NOTES CIRCUIT DIAGRAM - 430298
CHECK PROC. - 460298
CHECK LIST - 470298
SEE SHEET 2 FOR LATEST ISSUE

ISS	C	D	1c	2	3	4	5	6
ECO	–	–	RELEASED	ECO850	867/504	943	1217	1474
DATE	–	24-8-78	29-9-78	4-5-79	11-6-79	10.9.79	18.8.81	3.6.83
CHKD	–	MD		MD	MD	MD	MD	

DATE 28-4-78
DRAWN B.J.
CHECKED
APPROVED
DATE

datron ELECTRONICS LTD.
TITLE 1061/71/81
R.H. P.C.B. ASSEMBLY
DRAWING NUMBER 400298
SHEET 2 OF 2

AW 1144

DESIGNATOR	DATRON PART No.	DESCRIPTION	PRINCIPAL MANUFACTURER	MANUFACTURER'S PART No.	No. USED Per Assy.
R1	000333	33K 5% ¼W CARBON	MULLARD	CR25	2
R2	000101	100R " " "	"	"	6
R3	000101	100R " " "	"	"	–
R4	000156	15M 10% " "	ALLEN BRADLEY	CB	1
R5		FSV (18k NOM)		CR25	–
R6	050057	27K4 1% 15ppm MF	ACI	EE-0·100 C4	2
R7	050057	27K4 " " "	"	"	–
R8	000101	100R 5% ¼W CARBON	MULLARD	CR25	–
R9		NOT USED			
R10	000101	100R 5% ¼W CARBON	"	"	–
R11		FSV		CR25	–
R12	000472	4K7 " " "	"	"	12
R13	000104	100k " " "	"	"	12
R14	000472	4K7 " " "	"	"	–
R15		FSV			–
R16	070120	6K34 1% 10ppm WW	MANN	MX125	2
R17	070119	4K75 1% 10ppm WW	"	"	2
R18		PART OF KIT 219006 (D59)			–
R19		PART OF KIT 219006 (D60)			–
R20	063203	20K POT CERMET	BECKMAN	72P	1
R21	000105	1M0 5% ¼W CARBON	MULLARD	CR25	11
R22	000102	1K0 " " "	"	"	7
R23	063504	500k POT CERMET	BECKMAN	72P	2

NOTES. CIRCUIT DIAG. = 430299
CHECK PROCEDURE = 460299
CHECK LIST = 470299.
SEE SHEET 2 FOR LATEST ISSUE

			18	19	20	21	22	23			
			1247.1244	1245 1273	1296	1294/1342	1460	1512			
			3.1.81	4-1-82	30-1-82	26.5.82	25.5.83	12.6.83			
			MD	MD	MD	MD	MD	MD			
ISS	10	11	12	13	14	15	16		17		
ECO	[illegible]	1000.1032	1075.1076 1049.1072	1098.1101.1107	1117.1126	1141	1114.1184.1187.1188.1190		1217		
DATE	29-10-79	16.1.80	25.2.80	15.4.80	3.6.80	29.2.80	5.1.81		16-8-81		
CHKD	MD	MD	MD	MD	MD	MD	MD		MD		

DATE 12-7-78
DRAWN B.J.
CHECKED
APPROVED
DATE

datron ELECTRONICS LTD

TITLE 1071 ANALOGUE PCB ASSEMBLY.

DRAWING NUMBER 400299 SHEET 2 OF 24

J.W. 1164

DESIGNATOR	DATRON PART No.	DESCRIPTION	PRINCIPAL MANUFACTURER	MANUFACTURER'S PART No.	No. USED Per Assy.
R24	000185	1M8 10% ¼W CARBON	MULLARD	CR25	2
R25	000122	1K2 5% ¼W CARBON	MULLARD	CR25	2
R26	000185	1M8 10% ¼W CARBON	"	"	–
R27	000475	4M7 " " "	"	"	1
R28	000182	1K8 5% ¼W CARBON	"	"	3
R29	000100	10R " " "	"	"	8
R30	000100	10R " " "	"	"	–
R31	000473	47K " " "	"	"	3
R32	000393	39K " " "	"	"	1
R33	000473	47K " " "	"	"	–
R34	000102	1K " " "	"	"	–
R35	000104	100K " " "	"	"	–
R36	000104	100K " " "	"	"	–
R37	000562	5K6 " " "	"	"	3
R38	070116	825R 0·1% 10ppm WW	MANN	MX125	2
R39	070157	47R5 1% 10ppm WW	MANN	MX125	2
R40	070157	47R5 1% 10ppm WW	MANN	MX125	–
R41	070109	169R 1% 10ppm WW	MANN	MX125	2
R42	050028	84R5 1% 15ppm MF	ACI	EE-0·100 C4	2
R43	014228	42R2 1% 50ppm MF	HOLCO	HBC	2
R44	012108	21R0 1% 50ppm MF	HOLCO	HBC	2
R45	011058	10R5 1% 50ppm MF	HOLCO	HBC	2
R46	000182	1K8 5% ¼W CARBON	MULLARD	CR25	–

NOTES

SEE SHEET 2 FOR LATEST ISSUE

ISS											
ECO											
DATE											
CHKD											

DATE 12-7-78
DRAWN B.J.
CHECKED
APPROVED
DATE

datron ELECTRONICS LTD

TITLE 1071 ANALOGUE PCB ASSEMBLY.

DRAWING NUMBER 400299 SHEET 3 OF 24

J.W. 1164

DESIGNATOR	DATRON PART No.	DESCRIPTION	PRINCIPAL MANUFACTURER	MANUFACTURER'S PART No.	No. USED Per Assy.
R47	000100	10R 5% 1/4W CARBON	MULLARD	CR25	–
R48	000103	10K " " "	"	"	11
R49	000103	10K " " "	"	"	–
R50	000103	10K " " "	"	"	–
R51	000100	10R " " "	"	"	–
R52	000334	330K " " "	"	"	4
R53	000334	330K " " "	"	"	–
R54	000334	330K " " "	"	"	–
R55	000334	330K " " "	"	"	–
R56	000104	100K " " "	"	"	–
R57	000101	100R " " "	"	"	–
R58	000182	1K8 " " "	"	"	–
R59	000224	220K " " "	"	"	4
R60	000223	22K " " "	"	"	4
R61	000105	1M0 10% 1/4W CARBON	"	"	–
R62	000105	1M0 " " "	"	"	–
R63	000122	1K2 5% 1/4W CARBON	"	"	–
R64		NOT USED			
R65	000101	100R 5% 1/4W CARBON	MULLARD	CR25	–
R66	000183	18K " " "	"	"	1
R67	000562	5K6 " " "	"	"	–
R68	070113	806R 0·1% 10ppm WW	MANN	MX125	2
R69	000114	110K 5% 1/4W CARBON	MULLARD	CR25	2

NOTES.

SEE SHEET 2 FOR LATEST ISSUE

ISS.												
E.C.O.												
DATE												
CHKD.												

DATE 12-7-78
DRAWN B.J.
CHECKED
APPROVED
DATE

datron ELECTRONICS LTD

TITLE 1071 ANALOGUE PCB ASSEMBLY.

DRAWING NUMBER 400299 SHEET 4 OF 24

J.W. 1164

DESIGNATOR	DATRON PART No.	DESCRIPTION	PRINCIPAL MANUFACTURER	MANUFACTURER'S PART No.	No. USED Per Assy.
R70	070113	806R 0·1% 10ppm WW	MANN	MX125	–
R71	070117	12K0 0·1% 5ppm WW	"	MX125B	2
R72	000472	4K7 5% 1/4W CARBON	MULLARD	CR25	–
R73	000103	10K " " "	"	"	–
R74	000275	2M7 " " "	"	"	2
R75	000565	5M6 " " "	"	"	1
R76	000106	10M 10% 1/4W CARBON	"	"	2
R77	000226	22M " " "	"	"	1
R78	000473	47K 5% 1/4W CARBON	"	"	–
R79	000392	3K9 " " "	"	"	2
R80	000104	100K " " "	"	"	–
R81	000472	4K7 " " "	"	"	–
R82	000472	4K7 " " "	"	"	–
R83	000472	4K7 " " "	"	"	–
R84	011698	16R5 1% 1/8W MF	HOLCO	H8	1
R85		FSV (o/c COM)	MULLARD	CR25	–
R86	000472	4K7 5% 1/4W CARBON	MULLARD	CR25	–
R87	000114	110K " " "	"	"	–
R88	070109	169R 1% 10ppm WW	MANN	MX 125	–
R89	050028	84R5 1% 15ppm MF	ACI	EE 0·100 C4	–
R90	014228	42R2 1% 50ppm MF	HOLCO	H8C	–
R91	012108	21R0 1% 50ppm MF	HOLCO	H8C	–
R92	011058	10R5 1% " "	"	"	–

NOTES.

SEE SHEET 2 FOR LATEST ISSUE

ISS												
E.C.O												
DATE												
CHKD												

DATE 12-7-78
DRAWN B.J.
CHECKED
APPROVED
DATE

datron ELECTRONICS LTD

TITLE 1071 ANALOGUE PCB ASSEMBLY.

DRAWING NUMBER 400299 SHEET 5 OF 24

J.W. 1164

DESIGNATOR	DATRON PART No.	DESCRIPTION	PRINCIPAL MANUFACTURER	MANUFACTURER'S PART No.	No. USED Per Assy.
R93	000124	120K 5% 1/4W CARBON	MULLARD	CR25	2
R94	000102	1K " " "	"	"	–
R95	000106	10M 10% " "	"	"	–
R96	011473	147K 1% 50ppm MF	HOLCO	H8	1
R97		NOT USED			
R98		NOT USED			
R99	000472	4K7 5% 1/4W CARBON	MULLARD	CR25	–
R100	000472	4K7 " " "	"	"	–
R101	000100	10R 5% 1/4W CARBON	MULLARD	CR25	–
R102	000100	10R " " "	"	"	–
R103	000271	270R " " "	"	"	4
R104	000151	150R " " "	"	"	1
R105	000271	270R " " "	"	"	–
R106	000222	2k2 " " "	"	"	5
R107	000222	2k2 " " "	"	"	–
R108	090037-1	10K8114 ATTEN. SET	MANN		1 SET
R109	090037-1	10K8114 "	"		–
R110	090037-1	9K "	"		–
R111	090037-1	1K "	"		–
R112	000682	6K8 5% 1/4W CARBON	MULLARD	CR25	1
R113	000105	1M0 10% 1/4W CARBON	"	"	–
R114	042214	2M21% 100ppm CERMET FILM	ALLEN BRADLEY	TYPE CC	1
R115	041004	1M 1% 100ppm CERMET FILM	"	"	1

NOTES.

SEE SHEET 2 FOR LATEST ISSUE

ISS.												
E.C.O												
DATE												
CHKD												

DATE 12-7-78
DRAWN B.J.
CHECKED
APPROVED
DATE

datron ELECTRONICS LTD

TITLE 1071 ANALOGUE PCB ASSEMBLY.

DRAWING NUMBER 400299 SHEET 6 OF 24

J.W. 1164

DESIGNATOR	DATRON PART No.	DESCRIPTION	PRINCIPAL MANUFACTURER	MANUFACTURER'S PART No.	No. USED Per Assy.
R116	000105	1M 5% 1/4W CARBON	MULLARD	CR25	–
R117	000105	1M " " "	"	"	–
R118	000105	1M " " "	"	"	–
R119	008012	27K 2W CARBON FILM	PIHER	"	2
R120	008012	27K " " "	"	"	–
R121	008011	22K " " "	"	"	2
R122	008011	22K " " "	"	"	–
R123	000225	2M2 5% 1/4W CARBON	MULLARD	CR25	2
R124	011213	121K 1% 50ppm MF	HOLCO	H8	2
R125	000225	2M2 5% 1/4W CARBON	MULLARD	CR25	–
R126	013651	3K65 1% 50ppm MF	HOLCO	H8	1
R127	041005	10M0 1% 1/2W 100ppm CF	ALLEN BRADLEY	CC	1
R128	042215	22M1 1% 100 ppm CF	ALLEN-BRADLEY	CC	2
R129	042215	22M1 " 100 ppm "	"	"	–
R130	000362	3K6 5% 1/4W CARBON	MULLARD	CR25	2
R131	000362	3K6 " " "	"	"	–
R132	000105	1M " " "	"	"	–
R133	000105	1M " " "	"	"	–
R134	000394	390k " " "	"	"	1
R135	000275	2M7 " " "	"	"	1
R136	000395	3M9 " " "	"	"	1
R137	000223	22k " " "	"	"	–
R138	000125	1M2 " " "	"	"	1

NOTES

SEE SHEET 2 FOR LATEST ISSUE

ISS.												
E.C.O.												
DATE												
CHKD.												

DATE 12-7-78
DRAWN B.J.
CHECKED
APPROVED
DATE

datron ELECTRONICS LTD

TITLE 1071 ANALOGUE PCB ASSEMBLY.

DRAWING NUMBER 400299 SHEET 7 OF 24

J.W. 1164

DESIGNATOR	DATRON PART No.	DESCRIPTION	PRINCIPAL MANUFACTURER	MANUFACTURER'S PART No.	No. USED Per Assy.
R139	000336	33M 10% ¼W CARBON	ALLEN-BRADLEY	CB3361	1
R140	090049	18M MATCHED PAIR	HOLCO		1 PAIR
R141	090049	18M "	"		
R142	000272	2K7 5% ¼W CARBON	MULLARD	CR25	1
R143	090035-1	3M3 10M INPUT ATTEN SET	MANN		1 SET.
R144	000100	10R 5% ¼W CARBON	MULLARD	CR25	–
R145	000100	10R " " "	"	"	–
R146	000222	2K2 " " "	"	"	–
R147	000123	12K " " "	"	"	1
R148	090035-1	100K 10M INPUT ATTEN. SET.	MANN		–
R149	090035-1	3M3 " " " "	"		–
R150	063204	200k POT CERMET	BECKMAN	72P	1
R151	063205	2M POT CERMET	"	"	1
R152		F.S.V.	HOLCO	H8C	–
R153	011822	18K2 1% ⅛W MF	HOLCO	H8	1
R154	000103	10K 5% ¼W CARBON	MULLARD	CR25	–
R155	000221	220R " " "	"	"	1
R156	090035-1	3M3 10M INPUT ATTEN. SET	MANN		–
R157	000103	10K 5% ¼W CARBON	MULLARD	CR25	–
R158	000332	3K3 " " "	"	"	2
R159	063103	10K POT CERMET	BECKMAN	72P	1
R160	063504	500K " "	"	"	–
R161	000104	100K 5% ¼W CARBON	MULLARD	CR25	–

NOTES.

SEE SHEET 2 FOR LATEST ISSUE

ISS.											
E.C.O.											
DATE											
CHKD											

DATE 12-7-78
DRAWN B.J.
CHECKED
APPROVED
DATE

datron ELECTRONICS LTD

TITLE 1071 ANALOGUE PCB ASSEMBLY.

DRAWING NUMBER 400299 SHEET 8 OF 24

J.W. 1164

DESIGNATOR	DATRON PART No.	DESCRIPTION	PRINCIPAL MANUFACTURER	MANUFACTURER'S PART No.	No. USED Per Assy.
R162	000392	3K9 5% ¼W CARBON	MULLARD	CR25	–
R163	000107	100M 10% ¼W CARBON	ALLEN-BRADLEY	CB	1
R164	000104	100k 5% ¼W CARBON	MULLARD	CR25	–
R165	000104	100k " " "	"	"	–
R166	000563	56K 5% " "	"	"	5
R167	000562	5K6 " " "	"	"	–
R168	000563	56K " " "	"	"	–
R169	000563	56K " " "	"	"	–
R170	000564	560K " " "	"	"	2
R171	000564	560K " " "	"	"	–
R172	000335	3M3 10% ¼W CARBON	MULLARD	CR25	1
R173	000680	68R 5% " "	"	"	2
R174	000152	1K5 " " "	"	"	2
R175	000822	8K2 " " "	"	"	2
R176	000680	68R " " "	"	"	–
R177	000152	1K5 " " "	"	"	–
R178	000822	8K2 " " "	"	"	–
R179	440066	PART OF KIT	DATRON		1
R180	440066	" " "	"		–
R181	440066	" " "	"		–
R182	000472	4K7 5% ¼W CARBON	MULLARD	CR25	–
R183	000472	4K7 5% " "	"	"	–
R184	000270	27R " " "	"	"	2

NOTES

SEE SHEET 2 FOR LATEST ISSUE

ISS.											
E.C.O.											
DATE											
CHKD											

DATE 12-7-78
DRAWN B.J.
CHECKED
APPROVED
DATE

datron ELECTRONICS LTD

TITLE 1071 ANALOGUE PCB ASSEMBLY.

DRAWING NUMBER 400299 SHEET 9 OF 24

J.W. 1164

DESIGNATOR	DATRON PART No.	DESCRIPTION	PRINCIPAL MANUFACTURER	MANUFACTURER'S PART No.	No. USED Per Assy.
R185	000270	27R 5% 1/4W CARBON	MULLARD	CR25	—
R186	000104	100K " " "	"	"	—
R187	000222	2K2 " " "	"	"	—
R188	000103	10K " " "	"	"	—
R189	000103	10K " " "	"	"	—
R190	000561	560R " " "	"	"	2
R191	000561	560R " " "	"	"	—
R192	000155	1M5 " " "	"	"	1
R193	000273	27K " " "	"	"	1
R194	011213	121K 1% 1/8W M.F.	HOLCO	H8	—
R195	015112	51K1 " " "	"	"	1
R196	000223	22K 5% 1/4W CARBON	MULLARD	CR25	—
R197	000222	2K2 " " "	"	"	—
R198	011002	10K 1% 1/8W M.F.	HOLCO	H8	1
R199	008007	10R 5% 0·2W CARBON	MULLARD	CR16	2
R200	008007	10R " " "	"	"	—
R201	000824	820K 5% 1/4W CARBON	MULLARD	CR25	1
R202	000103	10K " " "	"	"	—
R203	000104	100K " " "	"	"	—
R204	000105	1M " " "	"	"	—
R205	000105	1M " " "	"	"	—
R206	000563	56K " " "	"	"	—
R207	000103	10K " " "	"	"	—

NOTES

SEE SHEET 2 FOR LATEST ISSUE

ISS												
E.C.O.												
DATE												
CHKD												

DATE 12-7-78
DRAWN B.J.
CHECKED
APPROVED
DATE

datron ELECTRONICS LTD

TITLE 1071 ANALOGUE PCB ASSEMBLY.

DRAWING NUMBER 400299 SHEET 10 OF 24

J.W. 1164

DESIGNATOR	DATRON PART No.	DESCRIPTION	PRINCIPAL MANUFACTURER	MANUFACTURER'S PART No.	No. USED Per Assy.
R208	000333	33K 5% 1/4W CARBON	MULLARD	CR25	—
R209	000563	56K " " "	"	"	—
R210	000103	10K " " "	"	"	—
R211	070120	6K34 1% 10ppm WW	MANN	MX125	—
R212	070116	825R 0·1% 10ppm WW	"	"	—
R213	070119	4K75 1% 10ppm WW	MANN	MX125	—
R214	070117	12K0 0·1% 5ppm WW	"	MX125B	—
R215	000271	270R 5% 1/4W CARBON	MULLARD	CR25	—
R216	000271	270R 5% 1/4W CARBON	"	"	—
R217		NOT USED			—
R218	080063	P.T.C THERMISTOR	TEXAS	TSP102K	1
R219	000224	220K 5% 1/4W CARBON	MULLARD	CR25	—
R220	000124	120K " " "	"	"	—
R221	000224	220K " " "	"	"	—
R222	000224	220K " " "	"	"	—
R223					
R224	012212	22k1 1% 1/8W 50ppm MF	HOLCO	H8C	2
R225	012212	22k1 1% 1/8W 50ppm MF	HOLCO	H8C	—
R226	000223	22k 5% 1/4W CARBON	MULLARD	CR25	—
R227	000471	470R 5% 1/4W CARBON	MULLARD	CR25	1
R228		NOT USED			—
R229		NOT USED			—
R230		NOT USED			—

NOTES

SEE SHEET 2 FOR LATEST ISSUE

ISS												
E.C.O.												
DATE												
CHKD												

DATE 12-7-78
DRAWN BJ
CHECKED
APPROVED
DATE

datron ELECTRONICS LTD

1071 ANALOGUE PCB ASSEMBLY.

DRAWING NUMBER 400299 11 24

J.W. 1164

DESIGNATOR	DATRON PART No.	DESCRIPTION	PRINCIPAL MANUFACTURER	MANUFACTURER'S PART No.	No. USED Per Assy.
R231	000104	100k 5% ¼W CARBON	MULLARD	CR25	—
R232	000332	3k3 5% ¼W CARBON	MULLARD	CR25	—
R233	000102	1k 5% ¼W CARBON	MULLARD	CR25	—
R234	000102	1k 5% ¼W CARBON	MULLARD	CR25	—
R235	000102	1k 5% ¼W CARBON	MULLARD	CR25	—
R236	000274	270k 5% ¼W CARBON	MULLARD	CR25	2
R237	000274	270k 5% ¼W CARBON	MULLARD	CR25	—
R238	000104	100k 5% ¼W CARBON	MULLARD	CR25	—
R239	000102	1k 5% ¼W CARBON	MULLARD	CR25	—
R240	000472	4k7 5% ¼W CARBON	MULLARD	CR25	—
R241	000331	330R 5% ¼W CARBON	MULLARD	CR25	1
AN1.	090050	3K3 S.I.P NETWORK	BECKMAN	764-1-R3·3K	1
AN2.	090042	R-2R LADDER NETWORK	ERIE		1
C1	150020	10µF 20% 25V DIP TANT	UNION CARBIDE	K10E25	12
C2	150020	10µF 20% 25V DIP TANT	UNION CARBIDE	K10E25	—
C3	104017	0·5pF 500V CER DISC	ERIE	831	1

NOTES.

SEE SHEET 2 FOR LATEST ISSUE

ISS.											
E.C.O.											
DATE											
CHKD.											

DATE 29-10-79
DRAWN B. JACKSON.
CHECKED
APPROVED
DATE

datron ELECTRONICS LTD

TITLE 1071 ANALOGUE PCB ASSY.

DRAWING NUMBER 400299 SHEET 12 OF 24

A.W. 3164

DESIGNATOR	DATRON PART No.	DESCRIPTION	PRINCIPAL MANUFACTURER	MANUFACTURER'S PART No.	No. USED Per Assy.
C4	150020	10µF 20% 25V DIP TANT	UNION CARBIDE	K10E25	—
C5	102222	2n2F 500V CER DISC	ERIE	801	2
C6	150020	10µF 20% 25V DIP TANT	UNION CARBIDE	K10E25	—
C7	150020	10µF " " " "	" "	"	—
C8		NOT USED			—
C9 *	140037-3	2µF SEL LOW D.A. GREEN	DATRON (MKS)		1
C10	110040	33nF 20% 63V POLYESTER	WIMA	MKS2	1
C11	110027	3300pF 20% 100V POLYESTER	WIMA	FKS2-MIN	2
C12	120031	3µ3F 10% 63V POLYCARB	ASHCROFT	A2653218	1
C13	102101	100pF 500V CER DISC	ERIE	801	3
C14	150020	10µF 20% 25V DIP TANT	UNION CARBIDE	K10E25	—
C15	150020	10µF " " " "	" "	"	—
C16	102101	100pF 500V CER DISC	ERIE	801	—
C17	102100	10pF " " "	"	"	1
C18	150020	10µF 20% 25V DIP TANT	UNION CARBIDE	K10E25	—
C19	150020	10µF " " " "	" "	"	—
C20	102470	47pF 500V CER DISC	ERIE	801	4
C21	102470	47pF 500V CER DISC	"	"	—
C22	102101	100pF 500V CER DISC	"	"	—
C23	101103	0·01µF 250V CER DISC	"	"	6
C24	101103	0·01µF 250V CER DISC	"	"	—
C25	150020	10µF 20% 25V DIP TANT	UNION CARBIDE	K10E25	—
C26	102471	470pF 500V CER DISC	ITT	CD10	2

NOTES * ALTERNATIVE 140050-3 2µF SEL LOW DA BLUE

SEE SHEET 2 FOR LATEST ISSUE

ISS.											
E.C.O.											
DATE											
CHKD.											

DATE 12-7-78
DRAWN B.J.
CHECKED
APPROVED
DATE

datron ELECTRONICS LTD

TITLE 1071 ANALOGUE PCB ASSEMBLY.

DRAWING NUMBER 400299 SHEET 13 OF 24

A.W. 3164

DESIGNATOR	DATRON PART No	DESCRIPTION	PRINCIPAL MANUFACTURER	MANUFACTURER'S PART No.	No USED Per Assy.
C27	101103	0·01μF 250V CER DISC	ERIE	801	–
C28	102470	47pF 500V " "	"	"	–
C29	102470	47pF 500V " "	"	"	–
C30		NOT USED			
C31	130073	1nF 5% 160V POLYSTYRENE	SUFLEX	HSC1000/5-10/160	1
C32	101103	0·01μF 250V CER DISC	ERIE	801	–
C33	110013	0·1μF 10% 250V POLYESTER	MULLARD	C280AE/P100K	3
C34	101103	0·01μF 250V CER DISC	ERIE	801	–
C35	120016	2n2F 20% 100V POLYCARB.	WIMA	FKC2MIN.	1
C36	102471	470pF 500V CER DISC	"	"	—
C37	110013	0·1μF 10% 250V POLYESTER	MULLARD	C280AE/P100K	–
C38	102102	1nF 10% 500V CER DISC	ITT	CD10	2
C39	440066	PART OF KIT	DATRON		–
C40	440066	" " "	"		–
C41	440066.	" " "	"		–
C42	110013	0·1μF 10% 250V POLYESTER	MULLARD	C280AE/P100K	–
C43	150020	10μF 20% 25V DIP TANT	UNION CARBIDE	K10EZ5	–
C44	150020	10μF " " " "	" "	"	–
C45	180006	47μF 25V AL ELECT	MULLARD	016-16479	2
C46	180006	47μF 25V "	"	"	–
C47	180022	33μF 40V "	"	016-17339	2
C48	180022	33μF 40V "	"	"	–
C49	180024	10μF 63V AL ELECT	MULLARD	016-18109	2

NOTES.

SEE SHEET 2 FOR LATEST ISSUE

ISS												
E.C.O.												
DATE												
CHKD												

DATE 12-7-78
DRAWN B.J.
CHECKED
APPROVED
DATE

datron ELECTRONICS LTD

TITLE 1071 ANALOGUE PCB ASSEMBLY

DRAWING NUMBER 400299 SHEET 14 OF 24

J.W. 1164

DESIGNATOR	DATRON PART No	DESCRIPTION	PRINCIPAL MANUFACTURER	MANUFACTURER'S PART No.	No USED Per Assy.
C50	180024	10μF 63V AL. ELECT	MULLARD	016-18109	–
C51	101103	10nF 250V CER DISC	ERIE	801	–
C52	110017	0·022μF 10% 250V POLYESTER	MULLARD	C280AE/P22K	1
C53	102332	3n3F 500V CER DISC	ERIE	801	2
C54	102332	3n3F 500V " "	"	"	–
C55	440066	PART OF KIT	DATRON.		–
C56	150016	1μF 20% 35V DIP TANT	UNION CARBIDE	K1R0E35	1
C57	130064	220pF 2½% 160V POLYSTYRENE	SUFLEX	HS220/2½-7/160	1
C58	110027	3300pF 20% 100V POLYESTER	WIMA	FKS 2-MIN	–
C59		NOT USED			–
C60	102222	2n2F 500V CER DISC	ERIE	801	–
C61		NOT USED			–
C62		NOT USED			–
C63		NOT USED			–
C64	102102	1nF 10% 500V CER DISC	ITT	CD10	–
D1	200008	Si LOW LEAKAGE	FAIRCHILD	1N458A	25
D2	210056	C5V6 400mW ZENER	MULLARD	BZY88C	2
D3	200008	Si LOW LEAKAGE	FAIRCHILD	1N458A	–
D4	210056	C5V6 400mW ZENER	MULLARD	BZY88C	–
D5	200001	Si GEN. PURPOSE	FAIRCHILD	1N4148	21
D6	200008	Si LOW LEAKAGE	FAIRCHILD	1N458A	–

NOTES.

SEE SHEET 2 FOR LATEST ISSUE

ISS.												
E.C.O.												
DATE												
CHKD.												

DATE 12-7-78
DRAWN B.J.
CHECKED
APPROVED
DATE

datron ELECTRONICS LTD

TITLE 1071 ANALOGUE PCB ASSEMBLY

DRAWING NUMBER 400299 SHEET 15 OF 24

J.W. 1164

DESIGNATOR	DATRON PART No.	DESCRIPTION	PRINCIPAL MANUFACTURER	MANUFACTURER'S PART No.	No. USED Per Assy.
D7	200008	Si LOW LEAKAGE	FAIRCHILD	1N458A	–
D8	210082	C8V2 400mW ZENER	MULLARD	BZY88C	1
D9	200008	Si LOW LEAKAGE	FAIRCHILD	1N458A	–
D10	200008	" " "	"	"	–
D11	200008	" " "	"	"	–
D12	200001	Si GEN PURPOSE	FAIRCHILD	1N4148	–
D13	200001	" " "	"	"	–
D14	200001	" " "	"	"	–
D15	200001	" " "	"	"	–
D16	200008	Si LOW LEAKAGE	FAIRCHILD	1N458A	–
D17	200008	" " "	"	"	–
D18	210068	C6V8 400mW ZENER	MULLARD	BZY88C	2
D19	210068	" " "	"	"	–
D20	200008	Si LOW LEAKAGE	FAIRCHILD	1N458A	–
D21	200001	Si GEN PURPOSE	FAIRCHILD	1N4148	–
D22	210220	C22V 400mW ZENER	MULLARD	BZY88C	2
D23	210220	" " "	"	"	–
D24	200001	Si GEN PURPOSE	FAIRCHILD	1N4148	–
D25	200008	Si LOW LEAKAGE	FAIRCHILD	1N458A	–
D26	200008	" " "	"	"	–
D27	200008	" " "	"	"	–
D28	200008	" " "	"	"	–
D29	200008	" " "	"	"	–

NOTES.

SEE SHEET 2 FOR LATEST ISSUE

ISS											
ECO											
DATE											
CHKD											

DATE 12-7-78
DRAWN B.J.
CHECKED
APPROVED
DATE

datron ELECTRONICS LTD

TITLE 1071 ANALOGUE PCB ASSEMBLY.

DRAWING NUMBER 400299 SHEET 16 OF 24

J.W. 1164

DESIGNATOR	DATRON PART No.	DESCRIPTION	PRINCIPAL MANUFACTURER	MANUFACTURER'S PART No.	No. USED Per Assy.
D30	200008	Si LOW LEAKAGE	FAIRCHILD	1N458A	–
D31	200001	Si GEN PURPOSE	FAIRCHILD	1N4148	–
D32	200001	" " "	"	"	–
D33	200001	" " "	"	"	–
D34	200001	" " "	"	"	–
D35	210047	C4V7 400mW ZENER	MULLARD	BZY88C	2
D36	200008	Si LOW LEAKAGE	FAIRCHILD	1N458A	–
D37	200008	" " "	"	"	–
D38	200008	" " "	"	"	–
D39	200008	" " "	"	"	–
D40	200001	Si GEN PURPOSE	FAIRCHILD	1N4148	–
D41	200001	Si GEN PURPOSE	FAIRCHILD	1N4148	–
D42	200001	" " "	"	"	–
D43	200002	Si RECTIFIER 1A.50V.	MOTOROLA	1N4001	4
D44	200002	" " " "	"	"	–
D45	200002	" " " "	"	"	–
D46	200002	" " " "	"	"	–
D47	210150	C15V 400mW ZENER	MULLARD	BZY88C	1
D48	200001	Si GEN PURPOSE	FAIRCHILD	1N4148	–
D49	210200	C20V 400mW ZENER	MULLARD	BZY88C	2
D50	210100	C10V 400mW ZENER	MULLARD	BZY88C	2
D51	210100	" " "	"	"	
D52	210200	C20V 400mW ZENER	MULLARD	BZY88C	–

NOTES.

SEE SHEET 2 FOR LATEST ISSUE

ISS											
ECO											
DATE											
CHKD											

DATE 12-7-78
DRAWN B.J.
CHECKED
APPROVED
DATE

datron ELECTRONICS LTD

TITLE 1071 ANALOGUE PCB ASSEMBLY.

DRAWING NUMBER 400299 SHEET 17 OF 24

J.W. 1164

DESIGNATOR	DATRON PART No.	DESCRIPTION	PRINCIPAL MANUFACTURER	MANUFACTURER'S PART No.	No. USED Per Assy.
D53	200008	Si LOW LEAKAGE	FAIRCHILD	IN458A	–
D54	200008	" " "	"	"	–
D55	200001	Si GEN PURPOSE	"	IN4148	–
D56	200001	" " "	"	"	–
D57		NOT USED			–
D58		NOT USED			–
D59	219006	214013 SELECTED WITH R18			2
D60	219006	214013 SELECTED WITH R19			–
D61	210033	C3V3 400 mW ZENER	MULLARD	BZY88C3V3	2
D62	210033	" " " "	"	"	–
D63	200001	Si GEN PURPOSE	FAIRCHILD	IN4148	–
D64	210120	12V 400mW ZENER	MULLARD	BZY88C12	2
D65	210120	12V 400mW ZENER	MULLARD	BZY88C12	–
D66	200008	Si LOW LEAKAGE	FAIRCHILD	IN458A	–
D67	200008	" " "	"	"	–
D68	200008	" " "	"	"	–
D69	200001	Si GEN PURPOSE	"	IN4148	–
D70	200001	Si GEN PURPOSE	"	IN4148	–
D71	210047	4V7 400mW ZENER	MULLARD	BZY88C4V7	–
D72	200001	Si GEN PURPOSE	FAIRCHILD	IN4148	–

12-7-78
B.J.

datron ELECTRONICS LTD

1071 ANALOGUE PCB ASSEMBLY

DRAWING NUMBER 400299 18 24

DESIGNATOR	DATRON PART No.	DESCRIPTION	PRINCIPAL MANUFACTURER	MANUFACTURER'S PART No.	No. USED Per Assy.
Q1	230001	N CHAN CURRENT LIM	SILICONIX	E506	2
Q2	250008	Si P.N.P	FAIRCHILD	BC214C	2
Q3	250008	Si P.N.P	FAIRCHILD	BC214C	–
Q4	230001	N CHAN CURRENT LIM	SILICONIX	E506	–
Q5	230027	LOW LEAKAGE N-FET	TELEDYNE	U3114	7
Q6	230027				–
Q7	230027				–
Q8	230027				–
Q9	230027				–
Q10	230027				–
Q11	230027				–
Q12	240017	LOW DRIFT DUAL NPN TRAN'S	NATIONAL	LM394	1
Q13	230002	N-CHAN J-FET	TELEDYNE	U1554E	6
Q14	230002				–
Q15	230002				–
Q16	230002				–
Q17		NOT USED			
Q18	230002	N-CHAN J-FET	TELEDYNE	U1554E	–
Q19	230002				–
Q20	240006	Si NPN	FAIRCHILD	2N3904	5
Q21	240006				–
Q22	240006				–
Q23	240006				–

NOTES.

SEE SHEET 2 FOR LATEST ISSUE

ISS.												
E.C.O.												
DATE												
CHKD.												

DATE 17-11-78
DRAWN B.J.
CHECKED
APPROVED
DATE

datron ELECTRONICS LTD

TITLE 1071 ANALOGUE PCB ASSEMBLY

DRAWING NUMBER 400299 SHEET 19 OF 24

J.W. 1164

DESIGNATOR	DATRON PART No.	DESCRIPTION	PRINCIPAL MANUFACTURER	MANUFACTURER'S PART No.	No. USED Per Assy.
Q24	240014	Si NPN	FAIRCHILD	BC337	2
Q25	250011	Si PNP	"	BC327	2
Q26	250011	Si PNP	"	"	—
Q27	250001	Si PNP	"	BC214	2
Q28	240014	Si NPN	"	BC337	—
Q29	240001	Si NPN	"	BC184	3
Q30	240006	Si NPN	"	2N3904	—
Q31	250004	Si PNP	"	2N3906	1
Q32	240001	Si NPN	"	BC184	—
Q33	240001	Si NPN	"	BC184	—
Q34	250001	Si PNP	"	BC214	—
Q35	230031	LOW LEAKAGE DUAL FET	TELEDYNE	SU2656 M	3
Q36	230031	" " " "	"	"	—
Q37	230031	" " " "	"	"	—

NOTES

SEE SHEET 2 FOR LATEST ISSUE

ISS											
E.C.O.											
DATE											
CHKD											

DATE 17-11-78
DRAWN B.J.
CHECKED
APPROVED
DATE

datron ELECTRONICS LTD

TITLE 1071 ANALOGUE PCB ASSEMBLY

DRAWING NUMBER 400299 SHEET 20 OF 24

DESIGNATOR	DATRON PART No.	DESCRIPTION	PRINCIPAL MANUFACTURER	MANUFACTURER'S PART No.	No. USED Per Assy.
M1 *	220030	Hi SPEED OPTO SELECTED	DATRON	HP4351 (RED)	2
M2	220017	DUAL OPTO ISOLATOR	FAIRCHILD	FCD880	7
M3	260002	LINEAR IC OP. AMP	"	741HC	3
M4	220029	Hi SPEED OPTO SELECTED	DATRON	HP4351 (WHITE)	2
M5	220029	" " " "	"	" "	—
M6 *	220030	" " " "	"	" (RED)	—
M7	220017	2K5V DUAL OPTO ISOLATOR	FAIRCHILD	FCD880	—
M8	220017	" " "	"	"	—
M9	220017	" " "	"	"	—
M10	220017	" " "	"	"	—
M11	220017	" " "	"	"	—
M12	280075	DUAL 4 I/P NAND	MOTOROLA	MC14012 BCP	1
M13	280015	QUAD LATCH	MOTOROLA	MC14076 BCP	4
M14	280015	" "		"	—
M15	260029	VOLTAGE COMPARATOR	NATIONAL	LM311 HC	1
M16	280082	HEX INVERTER	FAIRCHILD	F40014 BPC	1
M17	280079	QUAD 2 I/P OR GATE	MOTOROLA	MC14071 BCP	1
M18	280008	QUAD 2 I/P NAND GATE	"	MC14011 BCP	3
M19	280008	" " " " "	"	"	—
M20	280015	QUAD LATCH	"	MC14076 BCP	—
M21	280015	" "	"	"	—
M22	260027	LINEAR IC OP AMP	FAIRCHILD	μA 714 HC	1
M23	220019	DUAL OPTO ISOLATOR	"	FCD880 / SELECTED	1

NOTES * ALTERNATIVE HP4351 (220018)

SEE SHEET 2 FOR LATEST ISSUE

ISS											
E.C.O.											
DATE											
CHKD											

DATE 12-7-78
DRAWN B.J.
CHECKED
APPROVED
DATE

datron ELECTRONICS LTD

TITLE 1071 ANALOGUE PCB ASSEMBLY.

DRAWING NUMBER 400299 SHEET 21 OF 24

J.W. 1164

DESIGNATOR	DATRON PART No.	DESCRIPTION	PRINCIPAL MANUFACTURER	MANUFACTURER'S PART No	No. USED Per Assy.
M24	220017	DUAL OPTO ISOLATOR	FAIRCHILD	FCD880	–
M25	260069	411 OP AMP	NATIONAL	LF 411CH	3
M26	290078	4016 SWITCH SELECTED	DATRON	MC14016BCL (WHITE)	1
M27	280008	QUAD 2 I/P NAND GATE	"	MC14011 BCP	–
M28	280044	BINARY UP/DOWN COUNTER	"	MC14516 BCP	1
M29	280011	DUAL D FLIP-FLOP	"	MC14013 BCP	1
M30	260026	LINEAR IC OP AMP.	NATIONAL	LM212H	2
M31	260069	411 OP AMP	"	LF411CH	–
M32	260026	LINEAR IC OP. AMP	"	LM212H	–
M33	260002	" " " "	FAIRCHILD	μA 741 HC	–
M34	260069	411 OP AMP	NATIONAL	LF411CH	–
M35	290081	4051 MUX SELECTED	DATRON	M14051 BCL (WHITE)	1
M36	260002	741 OP AMP	FAIRCHILD	μA741HC	–
M37	NOT USED				
M38	NOT USED				
M39	260028	DUAL LINEAR I.C.	FAIRCHILD	μA1458CTC	1

NOTES.

SEE SHEET 2 FOR LATEST ISSUE

ISS												
E.C.O												
DATE												
CHKD												

DATE 12-7-78
DRAWN B.J.
CHECKED
APPROVED
DATE

datron ELECTRONICS LTD

TITLE 1071 ANALOGUE PCB ASSEMBLY.

DRAWING NUMBER 400299 SHEET 22 OF 24

J.W. 1164

DESIGNATOR	DATRON PART No	DESCRIPTION	PRINCIPAL MANUFACTURER	MANUFACTURER'S PART No	No. USED Per Assy
RL1	330018	RELAY 2P2W 7v HOLD-IN	A.M.F	SEE DRAWING	1
RL2	330017	RELAY REED LOW THERMAL	OMRON	G2E-182PH	1
	400379/1	WIRE/TERMINAL ASSY			7
	400379/2	" " "			4
	410095-[illegible]	P.C.B.			1
	459112	RELAY BRACKET	KDP		1
	540002	22 SWG. TINNED COPPER WIRE			A/R
	540008	7/·2 PTFE INSULATED WHITE WIRE.			165 mm
	590001	SLEEVE. MAX CABLE Ø 3·0	HELLERMANN ELECTRIC	H15 x 20 mm BLK HELSYN	4
	590004	SLEEVE. PTFE	" "	FE10	30mm
	590055	SLEEVE Ø1·0 SIL. RUBBER	" "	H15 CONT. BLACK	250 mm
J3	571075/C	16 WAY AP/3M RIBBON CABLE	DATRON		1
	602001	F.S.V. TERMINAL	MOLEX	02-04-1875	10
J2, 4, 5	605002	16 WAY DIL SOCKET	JERMYN	A23-2001/Y	3
	605060	14 WAY DIL SOCKET	ASTRALUX	ICL143-S3T	8
	605061	16 WAY DIL SOCKET	ASTRALUX	ICL143-S6T	12
J1 & J6	605052	8 WAY POLARISED SOCKET	MOLEX	22-01-2085	2
	605059	8 WAY DIL SOCKET	ASTRALUX	ICL-083-S6T	4
	606005	CLIP FOR 605002	ANTIFERENCE	RC-74	3

NOTES.

SEE SHEET 2 FOR LATEST ISSUE

ISS.												
E.C.O.												
DATE												
CHKD.												

DATE 12-7-78
DRAWN B.J.
CHECKED
APPROVED
DATE

datron ELECTRONICS LTD

TITLE 1071 ANALOGUE PCB. ASSEMBLY

DRAWING NUMBER 400299 SHEET 23 OF 24

J.W. 1164

DESIGNATOR	DATRON PART No.	DESCRIPTION	PRINCIPAL MANUFACTURER	MANUFACTURER'S PART No.	No. USED Per Assy.
	611004	SCREW M3 x 6mm POZI-PAN	GKN	ZINC PLATED	1
	613005	WASHER M3 INT/SHAKEPROOF st	GKN	" "	1
	615002	NUT M3 FULL HEX STEEL		" "	1
	617010	NYLATCH PLUNGER HN3P	RICHCO	HN3P-32-4-1	7
	617011	" GROMMET HN3G	"	HN3G-32-1	7
	620005	CLOVERLEAF P.T.F.E. TERM.	SEALECTRO	FTE15 P20	7
	620007	TEST POINT TERMINAL	MICROVAR	C30	25
	620003	SOLDER PCB TERMINAL LUG	HARWIN	H2105A	5
	630036	STANDARD STEATITE INSUL. BEAD	PARK ROYAL PORCELAIN CO	TYPE Nº1 (18 SWG)	6
	615005	NUT 3-48 UNC FULL HEX STEEL.			1
	613014	WASHER M2.5 INT/SHAKEPROOF	GKN DISTRIBUTORS.	ZINC PLATED	1

NOTES

SEE [illegible] LATEST ISSUE

DATE 12-7-78

DRAWN BJ

datron ELECTRONICS LTD

TITLE 1071 ANALOGUE PCB ASSEMBLY.

DRAWING NUMBER 400299

SHEET 24 OF 24

DESIGNATOR	DATRON PART No.	DESCRIPTION	PRINCIPAL MANUFACTURER	MANUFACTURER'S PART No.	No. USED Per Assy
R1	000103	10k 5% ¼W CARBON	MULLARD	CR25	21
R2	000103	10k " "			—
R3	000103	10k " "			—
R4	000103	10k "			—
R5	000103	10k "			—
R6	000102	1k "			5
R7	000103	10k "			—
R8	000472	4k7 "			8
R9	000273	27k " " "	"	"	1
R10	000105	1M " " "	"	"	2
R11	063204	200k POT CERMET	BECKMAN	72P	1
R12	000103	10K 5% ¼W CARBON	MULLARD	CR25	—
R13	000102	1k "			—
R14		NOT USED			—
R15	000472	4k7 "			2
R16	000332	3k3 "			3
R17	000683	68k "			2
R18	000222	2k2 "			6
R19	000393	39k "			1
R20	000104	100k " " "	"	"	7
R21	000104	100k 5% ¼W CARBON	"	"	—
R22	000104	100k "			—
R23	000221	220R "			1

NOTES. CIRCUIT DIAG. = 450300.
CHECK PROCEDURE = 460300.
CHECK LIST = 470300.
SEE SHEET 2 FOR LATEST ISSUE

						23	24					
						1451	1461					
						31.3.83	26.5.83					
						MD	MD					
	11	12	13	14	15	16	17	18	19	20	21	22
E.C.O.	1108	1132	1137	1147	1188	1214	1241	1243,51,53	1320	1313	1391	1414
DATE	18.4.80	18.6.80	25.7.80	30.9.80	6.1.81	11-6-81	4.11.81	2.12.81	12.5.82	12.7.82	25.8.82	15-10-82
CHKD	MD	MD	MD	MD	MD	MD	MD	MD	MD	MD	MD	MD

26 P.R.H.

datron ELECTRONICS LTD

1071 DIGITAL PCB. ASSY

400300 2 SHEET OF 16

J.W. 1164

DESIGNATOR	DATRON PART No.	DESCRIPTION	PRINCIPAL MANUFACTURER	MANUFACTURER'S PART No.	No. USED Per Assy
R24	000102	1k 5% ¼W CARBON	MULLARD	CR25	—
R25	000332	3k3 " " "	"	"	—
R26	000103	10k " " "	"	"	—
R27	000102	1k " " "	"	"	—
R28	000682	6k8 " " "	"	"	1
R29		NOT USED			—
R30		NOT USED			—
R31	000472	4k7 5% ¼W CARBON	"	"	—
R32	000472	4k7 " " "	"	"	—
R33	000222	2k2 " " "	"	"	—
R34		NOT USED			—
R35		" "			—
R36		" "			—
R37		" "			—
R38		" "			—
R39	000103	10k " "	"	"	—
R40	000103	10k " " "	"	"	—
R41	000332	3k3 " " "	"	"	—
R42	000103	10k " " "	"	"	—
R43	000104	100k " " "	"	"	—
R44	000103	10k " " "	"	"	—
R45	000364	360K " " "	"	"	1
R46	000472	4k7 " " "	"	"	—

NOTES.

SEE SHEET 2 FOR LATEST ISSUE

NO.												
E.C.O.												
DATE												
CHKD												

DATE

DRAWN IL.

CHECKED P.R.H.

APPROVED

DATE

datron ELECTRONICS LTD

TITLE 1071 DIGITAL PCB. ASSY.

DRAWING NUMBER 400300 3 SHEET OF 16

J.W. 1164

DESIGNATOR	DATRON PART No	DESCRIPTION	PRINCIPAL MANUFACTURER	MANUFACTURER'S PART No.	No. USED Per Assy.
R47	000103	10k 5% ¼W CARBON	MULLARD	CR25	—
R48	000104	100k " " "	"	"	—
R49	000103	10k " " "	"	"	—
R50		NOT USED			—
R51	000101	100R " " "	"	"	2
R52	000123	12k " " "	"	"	2
R53	000123	12k " " "	"	"	—
R54	000105	1M " " "	"	"	—
R55	000684	680k " " "	"	"	1
R56	000823	82K " " "	"	"	1
R57		NOT USED			—
R58	000100	10R " " "	"	"	2
R59	000220	22R " " "	"	"	2
R60	000220	22R " " "	"	"	—
R61	000100	10R " " "	"	"	—
R62		NOT USED			—
R63	000222	2k2 5% ¼W CARBON	MULLARD	CR25	—
R64	000222	2k2 " " "	"	"	—
R65	000103	10k " " "	"	"	—
R66	000103	10k " " "	"	"	—
R67	000271	270R " " "	"	"	1
R68	000103	10k " " "	"	"	—
R69		NOT USED			—

NOTES.

SEE SHEET 2 FOR LATEST ISSUE

ISS											
E.C.O											
DATE											
CHKD											

DATE

DRAWN IL.

CHECKED P.R.H.

APPROVED

DATE

datron ELECTRONICS LTD

TITLE 1071 DIGITAL PCB. ASSY.

DRAWING NUMBER 400300

DESIGNATOR	DATRON PART No.	DESCRIPTION	PRINCIPAL MANUFACTURER	MANUFACTURER'S PART No.	No. USED Per Assy.
R70		NOT USED			—
R71		" "			—
R72		" "			—
R73		" "			—
R74	000124	120k 5% ¼W CARBON	MULLARD	CR25	1
R75	000471	470R " " "	"	"	1
R76	000473	47k " " "	"	"	1
R77		NOT USED			—
R78		NOT USED			—
R79	000472	4k7 " " "	"	"	—
R80	000683	68k " " "	"	"	—
R81	000183	18k " " "	"	"	1
R82	000334	330k " " "	"	"	1
R83	063202	2k POT CERMET	BECKMAN	72P	1
R84	000223	22k 5% ¼W CARBON	MULLARD	CR25	1
R85	000472	4k7 " " "	"	"	—
R86		NOT USED			—
R87	000104	100k 5% ¼W CARBON	MULLARD	CR25	—
R88	000103	10k " " "	"	"	—
R89	000103	10k " " "	"	"	—
R90		NOT USED			—
R91	012002	20k0 1% ⅛W 50ppm MF	HOLCO	H8C	1
R92	015231	5k23 " " " "	"	"	1

NOTES.

SEE SHEET 2 FOR LATEST ISSUE

ISS											
E.C.O											
DATE											
CHKD											

DATE

DRAWN IL.

CHECKED P.R.H.

APPROVED

DATE

datron ELECTRONICS LTD

TITLE 1071 DIGITAL PCB. ASSY.

DRAWING NUMBER 400300

SHEET 5 OF 10

DESIGNATOR	DATRON PART No.	DESCRIPTION	PRINCIPAL MANUFACTURER	MANUFACTURER'S PART No.	No. USED Per Assy.
R93		NOT USED			—
R94	000102	1k 5% ¼W CARBON	MULLARD	CR25	—
R95	000472	4k7 " " "	"	"	—
R96	000103	10k " " "	"	"	—
R97	000222	2k2 " " "	"	"	—
R98	000101	100R " " "	"	"	—
R99	000104	100k " " "	"	"	—
R100		NOT USED			—
R101		NOT USED			—
R102	000103	10k 5% ¼W CARBON	"	"	—
R103	000222	2k2 " " "	"	"	—
AN1	090046	10k × 7 2% NETWORK	BECKMAN	764-1-R10k	5
AN2		NOT USED			—
AN3	090046	10k × 7 2% NETWORK	BECKMAN	764-1-R10k	—
AN4		NOT USED			—
AN5	090046	10k × 7 2% NETWORK	BECKMAN	764-1-R10k	—
AN6	090046	10k × 7 2% NETWORK	BECKMAN	764-1-R10k	—
AN7	090046	10k × 7 2% NETWORK	BECKMAN	764-1-R10k	—

NOTES.

SEE SHEET 2 FOR LATEST ISSUE

ISS.											
ECO											
DATE											
CHKD											

DATE
DRAWN I.L.
CHECKED P.R.M.
APPROVED
DATE

datron

TITLE 1071 DIGITAL PCB. ASSY.

DRAWING NUMBER 400300

DESIGNATOR	DATRON PART No.	DESCRIPTION	PRINCIPAL MANUFACTURER	MANUFACTURER'S PART No.	No. USED Per Assy.
C1	150002	10μF 20% 16v DIP TANT	UNION CARBIDE	K10E16	13
C2	150002	10μF " " " "	" "	"	—
C3	150002	10μF " " " "	" "	"	—
C4	150016	1μF " 35v " "	" "	K1R0E35	6
C5	110013	·1μF 10% 250v POLYESTER	MULLARD	C280AE/P100k	2
C6	101103	·01μF 250v CER DISC	ERIE	801	5
C7	150006	4·7μF 20% 16v DIP TANT	UNION CARBIDE	K4R7E16	1
C8		NOT USED			—
C9	150002	10μF 20% 16v DIP TANT	UNION CARBIDE	K10E16	—
C10	102101	100pF 500v CER DISC	ERIE	801	6
C11	150002	10μF 20% 16v DIP TANT	UNION CARBIDE	K10E16	—
C12	150016	1μF " 35v " "	" "	K1R0E35	—
C13	150002	10μF " 16v " "	" "	K10E16	—
C14	110013	0·1μF 10% 250v POLYESTER	MULLARD	C280AE/P100K	—
C15	150002	10μF 20% 16v DIP TANT	UNION CARBIDE	K1R0E16	—
C16	102102	1nF 500v CER DISC	ERIE	801	1.
C17	150002	10μF 20% 16v DIP TANT	UNION CARBIDE	K10E16	—
C18	150002	10μF " " " "	" "	"	—
C19	150016	1μF " 35v " "	" "	K1R0E35	—
C20	150002	10μF " 16v " "	" "	K10E16	—
C21	102101	100pF 500v CER DISC	ERIE	801	—
C22		NOT USED			—
C23	130059	470pF 2½% 25V POLYSTYRENE	SUFLEX	HSQ 470/2½-7/25	1

NOTES.

SEE SHEET 2 FOR LATEST ISSUE

ISS.											
ECO											
DATE											
CHKD											

DATE
DRAWN I.L.
CHECKED P.R.M.
APPROVED
DATE

datron ELECTRONICS LTD

TITLE 1071 DIGITAL PCB. ASSY.

DRAWING NUMBER 400300 SHEET 7 OF 16

I.W. 1164

DESIGNATOR	DATRON PART No	DESCRIPTION	PRINCIPAL MANUFACTURER	MANUFACTURER'S PART No.	No. USED Per Assy.
C24	130015	120pF 2½% 160v POLYSTYRENE	SOFLEX	HS	1
C25	102471	470pF 500v CER DISC	ITT	CD10EM470PKS 55500DSC	2
C26	150016	1µF 20% 35V DIP TANT	UNION CARBIDE	K1R0E35	—
C27	150002	10µF 20% 16V DIP TANT	" "	K10E16	—
C28	102220	22pF 500v CER DISC	ERIE	801	3
C29	150016	1µF 20% 35V DIP TANT	UNION CARBIDE	K1R0E35	—
C30		NOT USED			—
C31	110005	·01µF 10% 250v POLYESTER	MULLARD	C280AE/P10K	1
C32	120020	220nF 10% 63v POLYCARB	ASHCROFT	A2B2211B	1
C33	150014	·68µF 20% 35v DIP TANT	UNION CARBIDE	K R68E35	1
C34	101103	·01µF 250v CER DISC	ITT	CD10K3IN00JS 55500DSC	—
C35	150002	10µF 20% 16 v DIP TANT	UNION CARBIDE	K10E16	—
C36	101103	·01µF 250v CER DISC	ITT	CD10K3 IN00JS 55500DSC	—
C37	102220	22pF 500v CER DISC	ERIE	801	—
C38	102221	220pF 500v " "	"	"	2
C39	101103	·01µF 250v CER DISC	"	"	—
C40		NOT USED			—
C41	110027	3n3F 20% 100v POLYESTER	WIMA	FKS2MIN	1
C42	102471	470pF 500v CER DISC	ERIE	801	—
C43	102101	100pF 500v CER DISC	"	801	—
C44	150002	10µF 20% 16V DIP TANT	UNION CARBIDE	K10E16	—
C45	150016	1µF 20% 35v " "	" "	K1R0E35	—
C46	102220	22pF 500v CER DISC	ERIE	801	—

NOTES.

SEE SHEET 2 FOR LATEST ISSUE

ISS											
ISS A											
ISS B											
ISS C											
ISS D											

DATE

DRAWN IL

CHECKED P.R.H.

APPROVED

DATE

datron ELECTRONICS LTD

TITLE 1071 DIGITAL PCB. ASSY.

DRAWING NUMBER 400300 | 8 SHEET OF 16

DESIGNATOR	DATRON PART No.	DESCRIPTION	PRINCIPAL MANUFACTURER	MANUFACTURER'S PART No.	No. USED Per Assy.
C47	150004	100µF 20% 6V3 DIP TANT	UNION CARBIDE	K100E6V3	1
C48		NOT USED			—
C49	101103	·01µF 250v CER DISC	ERIE	801	—
C50	102101	100pF 500v CER DISC	ERIE	801	—
C51	102101	100pF 500v CER DISC	ERIE	801	—
C52	102101	100pF 500v CER DISC	ERIE	801	—
C53	102221	220pF 500v CER DISC	ERIE	801	—
D1	200001	Si G.P. DIODE	FAIRCHILD	IN4148	10
D2	200001	" " "	"	"	—
D3	200001	" " "	"	"	—
D4	200001	" " "	"	"	—
D5	200008	Si Low LEAKAGE	"	IN458A	1
D6	220010	HOT CARRIER DIODE	HEWLETT PACKARD	HSCH1001/IN6263	1
D7		NOT USED			—
D8		" "			—
D9		" "			—
D10	200001	Si G.P. DIODE	FAIRCHILD	IN4148	—
D11	200001	" G.P. DIODE	"	IN4148	—
D12	200002	" RECTIFIER 1A 50V	"	IN4001	2
D13	213006	5V 5W ZENER	UNITRODE	TVS505	1
D14	200001	Si G.P. DIODE	FAIRCHILD	IN4148	—
D15	200001	Si G.P. DIODE	FAIRCHILD	IN4148	—
D16	200002	Si RECTIFIER 1A 50V	FAIRCHILD	IN4001	—

NOTES.

SEE SHEET 2 FOR LATEST ISSUE

ISS											
ISS A											
ISS B											
ISS C											
ISS D											

DATE

DRAWN IL.

CHECKED P.R.H.

APPROVED

DATE

datron ELECTRONICS LTD

TITLE 1071 DIGITAL PCB. ASSY.

DRAWING NUMBER 400300 | 9 SHEET OF 16

DESIGNATOR	DATRON PART No.	DESCRIPTION	PRINCIPAL MANUFACTURER	MANUFACTURER'S PART No.	No. USED Per Assy.
D17	200001	Si. G.P. DIODE	FAIRCHILD	IN4148	—
D18		NOT USED			—
D19		NOT USED			—
D20		NOT USED			—
D21	200001	Si. G.P. DIODE	FAIRCHILD	IN4148	—

NOTES

SEE SHEET 2 FOR LATEST ISSUE

ISS											
E.C.O.											
DATE											
CHKD											

DATE
DRAWN IL
CHECKED
APPROVED
DATE

datron ELECTRONICS LTD

TITLE 1071 DIGITAL PCB. ASSY.

DRAWING NUMBER 400300 SHEET 10 OF 16

J.W. 2164

DESIGNATOR	DATRON PART No	DESCRIPTION	PRINCIPAL MANUFACTURER	MANUFACTURER'S PART No.	No. USED Per Assy.
Q1	240001	Si NPN TRANSISTOR	NATIONAL	BC184	3
Q2	240001	" " "	"	"	—
Q3	240007	" " "	"	2N3646	2
Q4		NOT USED			—
Q5	240006	Si NPN TRANSISTOR	NATIONAL	2N3904	3
Q6	250004	Si PNP "	"	2N3906	3
Q7	250004	" " "	"	"	—
Q8		NOT USED			—
Q9		" "			—
Q10		" "			—
Q11	240006	Si NPN "	"	2N3904	—
Q12	250011	" PNP "	"	BC327	1
Q13	240007	" NPN "	"	2N3646	—
Q14	240001	" " "	"	BC184	—
Q15	240006	" " "	"	2N3904	—
Q16	250004	" PNP "	"	2N3906	—

NOTES

SEE SHEET 2 FOR LATEST ISSUE

ISS.											
E.C.O.											
DATE											
CHKD.											

DATE
DRAWN IL.
CHECKED P.R.H.
APPROVED
DATE

datron ELECTRONICS LTD

TITLE 1071 DIGITAL PCB. ASSY.

DRAWING NUMBER 400300 SHEET 11 OF 16

J.W. 2164

DESIGNATOR	DATRON PART No.	DESCRIPTION	PRINCIPAL MANUFACTURER	MANUFACTURER'S PART No.	No. USED Per Assy.
M1	280011	DUAL D FLIP-FLOP	MOTOROLA	MC14013BCP	2
M2	280022	QUAD BILATERAL SWITCH	"	MC14016BCP	1
M3	280024	TRI-STATE HEX NON-INV. BUFFER	"	MC14503BCP	7
M4	280024	" " " " " "	"	"	–
M5	280024	" " " " " "	"	"	–
M6	280024	" " " " " "	"	"	–
M7	280015	QUAD LATCH	"	MC14076BCP	5
M8	280015	" "	"	"	–
M9	280015	" "	"	"	–
M10	280024	TRI-STATE HEX NON-INV BUFFER	"	MC14503BCP	–
M11	280015	QUAD LATCH	"	MC14076BCP	–
M12	280015	" "	"	"	–
M13	280044	BINARY UP/DOWN COUNTER	"	MC14516BCP	2
M14	280044	" " " "	"	"	–
M15	290003	TIMER – ASTABLE	SIGNETICS	NE555V	3
M16	270058	DUAL 1-of-4 DECODER	NATIONAL	74LS156	2
M17	270048	QUAD 2 I/P NAND GATE	NATIONAL	74LS00	2
M18	290114-17C	2516 EPROM PROGRAMMED DATRON		TMS2516(290114-155)	1
M19	280066	256 x 4 BIT STATIC CMOS RAM	SEE DRAWING		2

NOTES.

SEE SHEET 2 FOR LATEST ISSUE

ISS.											
ECO.											
DATE											
CHKD.											

DATE

DRAWN IL.

CHECKED P.R.H.

APPROVED

DATE

datron ELECTRONICS LTD

TITLE 1071 DIGITAL PCB. ASSY.

DRAWING NUMBER 400300 | SHEET 12 OF 16

DESIGNATOR	DATRON PART No.	DESCRIPTION	PRINCIPAL MANUFACTURER	MANUFACTURER'S PART No.	No. USED Per Assy.
M20	280066	256 x 4 BIT STATIC CMOS RAM	SEE DRAWING		–
M21	270064	QUAD TRISTATE BUFFER	NATIONAL	DM 74LS125N	1
M22	280011	DUAL D FLIP-FLOP	"	MC14013BCP	–
M23	270053	A-D CHIP	FERRANTI	ZNA 2035	1
M24	280024	TRI-STATE HEX NON-INV. BUFFER	MOTOROLA	MC14503BCP	–
M25	280024	" " " " "	"	"	–
M26	280006	DUAL J-K FLIP-FLOP	"	MC14027BCP	1
M27		NOT USED			–
M28	270051	DUAL 4 I/P AND GATE	NATIONAL	74LS21	2
M29	270055	DUAL 4 I/P NAND GATE	"	74LS20	2
M30 *	290049-17C	4k x 8 ROM – SEE PROG. SPEC		TMS 2532 JL/PROGRAMMED	1
M31	280096	1K x 4BIT STATIC CMOS RAM	SEE DRAWING		2
M32	270058	DUAL 1-of-4 DECODER	NATIONAL	74LS155	–
M33	270051	DUAL 4 I/P AND GATE	"	74LS21	–
M34	270055	DUAL 4 I/P NAND GATE	"	74LS20	–
M35 †	290048-17C	4k x 8 ROM – SEE PROG SPEC		TMS 2532 JL/PROGRAMMED	1
M36	280096	1K x 4BIT STATIC CMOS RAM	SEE DRAWING		–
M37	280025	QUAD BILATERAL SWITCH	MOTOROLA	MC14066BCP	2
M38	280071	TRIPLE 3 I/P NOR GATE	MULLARD	HEF4025P	2
M39	280017	HEX INVERTER	MOTOROLA	MC14069BCP	1
M40	280083	QUAD 2 I/P NOR GATE		HEF4001BP	1
M41		NOT USED			–
M42		NOT USED			–

NOTES * M30 ALTERNATIVE = 290055– } ISSUE Nos AS 290049/48 RESP.
† M35 ALTERNATIVE = 290054– }

SEE SHEET 2 FOR LATEST ISSUE

ISS.											
ECO											
DATE											
CHKD											

DATE

DRAWN IL.

CHECKED P.R.H.

APPROVED

DATE

datron ELECTRONICS LTD

TITLE 1071 DIGITAL PCB. ASSY.

DRAWING NUMBER 400300 | SHEET 13 OF 16

J.W. 1164

DESIGNATOR	DATRON PART No.	DESCRIPTION	PRINCIPAL MANUFACTURER	MANUFACTURER'S PART No.	No. USED Per Assy.
M43	290003	TIMER/MONOSTABLE	SIGNETICS	NE 555V	—
M44	270048	QUAD 2 I/P NAND GATE	NATIONAL	74 LS 00	—
M45	270050	HEX INVERTER	"	74 LS 04	1
M46	280025	QUAD BILATERAL SWITCH	MOTOROLA	MC14066BCP	—
M47	280070	DIVIDE-BY-8 COUNTER/DIVIDER	MULLARD	HEF 4022P	1
M48	280071	TRIPLE 3 I/P NOR GATE	"	HEF 4025P	—
M49	280023	QUAD 2 I/P NOR GATE	MOTOROLA	MC14001 BCP	1
M50		NOT USED			—
M51		NOT USED			—
M52	270056	8 I/P NAND GATE	NATIONAL	74 LS 30	1
M53	280061	MICRO PROCESSOR CHIP	MOTOROLA	MC 6800L	1
M54	270023	QUAD 2 I/P NAND GATE	NATIONAL	7437	1
M55	270054	QUAD 2 I/P AND GATE	"	74 LS 08	2
M56	270054	" " " "	"	"	—
M57	270057	DUAL JK FLIP-FLOP	"	74 LS 76	1
M58	280009	HEX INVERTER/BUFFER	MOTOROLA	MC14049 BCP	2
M59	280009	" " "	"	"	—
M60, M62	260031	VOLTAGE DETECTOR	INTERSIL	ICL8211	2
M61	290003	TIMER - ASTABLE	SIGNETICS	NE 555V	—
S1		NOT USED			—
S2		NOT USED			—
S3		NOT USED			—

NOTES.

SEE SHEET 2 FOR LATEST ISSUE

DATE

DRAWN IL.

CHECKED P.R.H.

APPROVED

DATE

datron

TITLE 1071 DIGITAL PCB. ASSY.

DRAWING NUMBER 400300 SHEET 14 OF 16

DESIGNATOR	DATRON PART No.	DESCRIPTION	PRINCIPAL MANUFACTURER	MANUFACTURER'S PART No.	No. USED Per Assy.
L1	370004	100 μH R.F. CHOKE	SIGMA	SC10/100	1
	590004	SLEEVE - PTFE	HELLERMAN ELECTRIC	FE10	A/R
	590055	SLEEVE ø 1·0 SIL. RUBBER	" "	HIS CONT. BLACK	10mm
TPIs, LINKS LK.	540002	22 SWG. BTC WIRE			A/R
	920048	BUS STRIP	MEKTRON	M823 14.7.3F	1
	613018	4BA NYLON WASHER			2
	630098	COMPONENT CLIP	RICHCO	KKU-8	1
	606005	CLIP FOR 605002	ANTIFERENCE	RC74	3
J1, J2, J4	605002	16 WAY D.I.L. LOW PROFILE SKT.	JERMYN OR ANTIFERENCE	A23-2001/Y OR ICN-163-S3	3
	605065	28 WAY D.I.L. " " "	AUGAT	328-AG39D	1
	605060	14 WAY D.I.L. SOCKET	ASTRALUX OR JERMYN	ICL 143-S3T	22
	605061	16 WAY D.I.L. SOCKET	" "	ICL 163-S6T	24
	605050	40 WAY D.I.L. SOCKET	AUGAT	340-AG39D	1
	605063	22 WAY D.I.L. SOCKET	AUGAT	322-AG39D	2
	605064	24 WAY D.I.L. SOCKET	"	324-AG39D	3
	605062	18 WAY D.I.L. SOCKET	"	318-AG39D	2
JL3	604037	PROGRAMMING CLASS 160 PLUG	"	8136-4756B	1
	605059	8 WAY D.I.L. SOCKET	ASTRALUX	ICL-083-S6T	1
J5	605052	8 WAY POLARISED SOCKET	"	22-01-2085	1
	617010	NYLATCH PLUNGER	ORDER FROM CJ FOX & SONS	HN3P-32-4-1	8
	617011	NYLATCH GROMMET	" " " "	HN3G-32-1	8
J3	605102	24 WAY D.I.L. SOCKET. GOLD	CA	CA-24-S-103D	1
	410096-9	PCB			1

NOTES.

SEE SHEET 2 FOR LATEST ISSUE

DATE

DRAWN IL.

CHECKED P.R.H.

APPROVED

DATE

datron

TITLE 1071 DIGITAL PCB. ASSY.

DRAWING NUMBER 400300 SHEET 15 OF 16

DESIGNATOR	DATRON PART No.	DESCRIPTION	PRINCIPAL MANUFACTURER	MANUFACTURER'S PART No.	No. USED Per Assy.
	400 379/1	WIRE/TERMINAL ASSY.			7
J6		NOT USED			–
X1	800020	1·6384 MHz CRYSTAL	CRYSTAL ELECTRONICS	STYLE D	1
J7		NOT USED			–
	620003	SOLDER PCB TERMINAL LUG	HARWIN	H2105A	5
	630036	STANDARD STEATITE INSUL. BEAD	PARK ROYAL PORCELAIN CO.	TYPE No 1 (18SWG)	2
	620007	TEST POINT TERMINAL	MICROVAR	C30	23
	540008	7/·2 WHITE PTFE INSULATED	1kVrms To BSG210 TYPE C		260mm
	590001	SLEEVE MAX CABLE ϕ3·0	HELLERMANN ELECTRIC	H15 X 20mm BLACK HELSIN	1
	590006	HEATSHRINK SLEEVE ϕ2·4	R.S. OR HELLERMANN	399-495 OR LVR24	20mm
	601002	GOLD PIN ϕ 1·47 PCB MNT	AMP	60803-1	1
	613009	48A SOLDER TAG BRASS TIN PL			1
	602003	GOLD SOCKET ϕ 1·47 CRIMP	AMP	60983-1	1

NOTES.

SEE SHEET 2 FOR LATEST ISSUE

ISS.												
E.C.O.												
DATE												
CHKD												

DATE	
DRAWN	I.L.
CHECKED	P.A.H.
APPROVED	
DATE	

datron

TITLE 1071 DIGITAL PCB. ASSY.

DRAWING NUMBER 400300 16

DESIGNATOR	DATRON PART No	DESCRIPTION	PRINCIPAL MANUFACTURER	MANUFACTURER'S PART No	No. USED Per Assy
R1	000472	4k7 5% ¼W CARBON	MULLARD	CR25	4
R2	000103	10k " " "	"	"	3
R3	000183	18k " " "	"	"	1
R4	000103	10k " " "	"	"	–
R5	000104	100k " " "	"	"	1
R6	000103	10k " " "	"	"	–
R7	000102	1k " " "	"	"	20
R8	000102	1k " " "	"	"	–
R9	000102	1k " " "	"	"	–
R10	000102	1k " " "	"	"	–
R11	000102	1k " " "	"	"	–
R12	000102	1k " " "	"	"	–
R13	000102	1k " " "	"	"	–
R14	000102	1k " " "	"	"	–
R15	000102	1k " " "	"	"	–
R16		NOT USED			–
R17		NOT USED			–
R18	000102	1k " " "	"	"	–
R19	000102	1k " " "	"	"	–
R20	000102	1k " " "	"	"	–
R21	000472	4k7 " " "	"	"	–
R22	000272	2k7 " " "	"	"	5
R23	000472	4k7 " " "	"	"	–

NOTES. CIRCUIT DIAGRAM = 430301
CHECK PROCEDURE = 460301
CHECK LIST = 470301

SEE SHEET 2 FOR LATEST ISSUE

ISS	C	1	2	3	4	5	6	7	8
ECO	–	–	789	822	854	904	[illegible]	1217	1253
DATE	28.4.78	29.9.78	17 Nov 78	19-FEB-79	8 MAY 79	21.6.79	8-1-80	17.8.81	2.12.81
CHKD	–	[illegible]	MJD	[illegible]	MD	MD	MD	MD	MD

DATE 28.4.78
DRAWN JL
CHECKED [illegible]
APPROVED
DATE

datron ELECTRONICS LTD

TITLE 1071 1081 DISPLAY DRIVER PCB. ASSY.

DRAWING NUMBER 400301 SHEET 2 OF 7

AW. 1164

DESIGNATOR	DATRON PART No.	DESCRIPTION	PRINCIPAL MANUFACTURER	MANUFACTURER'S PART No.	No. USED Per Assy.
R24	000272	2k7 5% ¼W CARBON	MULLARD	CR25	–
R25	000272	2k7 " " "	"	"	–
R26	000272	2k7 " " "	"	"	–
R27	000182	1k8 " " "	"	"	1
R28	000222	2k2 " " "	"	"	1
R29	000272	2k7 " " "	"	"	–
R30	000102	1k " " "	"	"	–
R31	000102	1k " " "	"	"	–
R32	000102	1k " " "	"	"	–
R33	000102	1k " " "	"	"	–
R34	000102	1k " " "	"	"	–
R35	000102	1k " " "	"	"	–
R36	000102	1k " " "	"	"	–
R37	000102	1k " " "	"	"	–
R38	000472	4k7 " " "	"	"	–
R39	000393	39k " " "	"	"	1
R40		NOT USED			–
R41	000865	56K 5% ¼W CARBON	MULLARD	CR25	1

NOTES.

SEE SHEET 2 FOR LATEST ISSUE

ISS											
ECO											
DATE											
CHKD											

DATE
DRAWN
CHECKED
APPROVED
DATE

datron ELECTRONICS LTD

TITLE 1071 1081 DISPLAY DRIVER PCB. ASSY

DRAWING NUMBER 400301 SHEET 3 OF 7

DESIGNATOR	DATRON PART No.	DESCRIPTION	PRINCIPAL MANUFACTURER	MANUFACTURER'S PART No.	No. USED Per Assy
C1	150020	10µF. 20%. 25V DIP TANT	UNION CARBIDE	K10E 25	3
C2	110005	0·01µF. 20% 250v POLYESTER	MULLARD	C280 AE/P10K	4
C3-C11	110013	0·1µF 20%. 250v POLYESTER	MULLARD	C280 AE/P100K	9
C12		NOT USED			–
C13	110005	0·01µF 20% 250v "	MULLARD	C280 AE/P10K	–
C14	150020	10µF 20% 25v DIP TANT	UNION CARBIDE	K10E25	–
C15	110005	0·01µF 20% 250v POLYESTER	MULLARD	C280 AE/P10K	–
C16	110005	0·01µF 20% 250v POLYESTER	MULLARD	C280 AE/P10K	–
C17	150020	10µF 20% 25v DIP TANT	UNION CARBIDE	K10E25	–
C18	180019	10µF 20% 250v AL ELEC	ITT	3F10 1005 250 AA	1
D1		NOT USED			–
D2	200001	Si GP. DIODE	FAIRCHILD	IN4148	10
D3	200001	" " "	"	"	–
D4	200001	" " "	"	"	–
D5	200001	" " "	"	"	–
D6	200001	" " "	"	"	–
D7	200001	" " "	"	"	–
D8	200001	" " "	"	"	–
D9	200001	" " "	"	"	–
D10	200001	" " "	"	"	–
D11	200001	" " "	"	"	–

NOTES.

SEE SHEET 2 FOR LATEST ISSUE

ISS.												
E.C.O.												
DATE												
CHKD												

DATE
DRAWN
CHECKED
APPROVED
DATE

datron ELECTRONICS LTD

TITLE 1071 1081 DISPLAY DRIVER PCB ASSY

DRAWING NUMBER 400301 SHEET 4 OF 7

J.W. 1164

DESIGNATOR	DATRON PART No.	DESCRIPTION	PRINCIPAL MANUFACTURER	MANUFACTURER'S PART No.	No. USED Per Assy.
D12	213005	DIODE ZENER 75V. ½W.	MOTOROLA	BZX79C75	1
Q1	250009	Si PNP TRANSISTOR	NATIONAL	2N5401	11
Q2	250009	" " "	"	"	–
Q3	250009	" " "	"	"	–
Q4	240009	" NPN "	"	MPSL01	9
Q5	240009	" " "	"	"	–
Q6	240009	" " "	"	"	–
Q7	240009	" " "	"	"	–
Q8	240009	" " "	"	"	–
Q9	240009	" " "	"	"	–
Q10	240009	" " "	"	"	–
Q11	240009	" " "	"	"	–
Q12	240009	" " "	"	"	–
Q13	250009	" PNP "	"	2N5401	–
Q14	250009	" " "	"	"	–
Q15	250009	" " "	"	"	–
Q16	250009	" " "	"	"	–
Q17	250009	" " "	"	"	–
Q18	250009	" " "	"	"	–
Q19	250009	" " "	"	"	–
Q20	250009	" " "	"	"	–
			"	"	–

NOTES.

SEE SHEET 2 FOR LATEST ISSUE

ISS.												
E.C.O.												
DATE												
CHKD												

DATE
DRAWN
CHECKED
APPROVED
DATE

datron ELECTRONICS LTD

TITLE 1071 1081 DISPLAY DRIVER PCB. ASSY.

DRAWING NUMBER 400301 SHEET 5 OF 7

J.W. 1164

DESIGNATOR	DATRON PART No	DESCRIPTION	PRINCIPAL MANUFACTURER	MANUFACTURER'S PART No.	No. USED Per Assy.
M1	280062	128 × 8 BIT STATIC RAM	MOTOROLA	MC 6810 A	1
M2	280015	QUAD LATCH	NATIONAL	MM 74C173N	2
M3	280015	" "	"	"	–
M4	280023	QUAD 2 I/P NOR GATE	MOTOROLA	MC 14001 BCP	2
M5	280023	" " " "	"	"	–
M6	280024	TRI-STATE HEX NON-INV. BUFFER	"	MC14503 BCP	2
M7	280024	" " " " " "	"	"	–
M8	280059	DUAL BINARY UP COUNTER	"	MC 14520 BCP	1
M9	270045	QUAD 2-1 DATA SELECT LS TTL	NATIONAL	SN74 LS 157	1
M10	280033	8 CHANNEL DATA SELECT	MOTOROLA	MC 14512 BCP	1
M11	280043	4 BIT LATCH/4-TO 16 LINE DECODER	"	MC 14515 BCP	1
M12	270048	QUAD 2 I/P NAND LS TTL	NATIONAL	SN74 LS00	1
M13	280077	HEX GATE	MOTOROLA	MC14572	1
J1	571095/C	16 WAY AP/3M RIBBON CABLE	DATRON	—	1
J2	605102	24 WAY DIL SKT. GOLD	CA	CA 245 106D	1
	605060	14 WAY DIL SOCKET	ASTRALUX OR JERMYN	ICL 143 – S3T	3
	605061	16 WAY DIL SOCKET	"	ICL 163 – S6T	8
	605064	24 WAY DIL SKT. TIN PLATE	AUGAT	324 – AG 39D	2
AN2 – AN4	090065	330K x 7. 2% RESISTOR NETWORK.	BECKMAN	764-1-R330K	3

NOTES.

SEE SHEET 2 FOR LATEST ISSUE

ISS												
E.C.O												
DATE												
CHKD												

DATE
DRAWN
CHECKED
APPROVED
DATE

datron ELECTRONICS LTD

TITLE 1071 1081 DISPLAY DRIVER PCB. ASSY.

DRAWING NUMBER 400301 SHEET 6 OF 7

J.W. 1164

DESIGNATOR	DATRON PART No.	DESCRIPTION	PRINCIPAL MANUFACTURER	MANUFACTURER'S PART No.	No. USED Per Assy.
	410097-5A	PCB			1
	617010	NYLATCH - PLUNGER	ORDER FROM C.J.FOX & SONS	HN3P-32-4-1	4
	617011	NYLATCH - GROMMET	" " " "	HN3G-32-1	4
TP1 – TP6	540001	22 SWG. BTC. WIRE			A/R
	590004	SLEEVE – PTFE	HELLERMANN ELECTRIC	FE10	A/R
	620007	TEST POINT TERMINAL	MICROVAR	C30	5

NOTES

SEE SHEET [illegible] LATEST ISSUE

ISS												
E.C.O												
DATE												
CHKD												

DATE
DRAWN
CHECKED
APPROVED
DATE

datron ELECTRONICS LTD

TITLE 1071 1081 DISPLAY DRIVER PCB ASSY.

DRAWING NUMBER 400301 SHEET 7 OF 7

J.W. 1164

DESIGNATOR	DATRON PART No.	DESCRIPTION	PRINCIPAL MANUFACTURER	MANUFACTURER'S PART No.	No. USED Per Assy.
R1	090056-1	3K984 0·1% WIRE WOUND	MANN	MATCHED SET. (R1&R3)	(1 SET)
R2	090001	P.T.C. THERMISTOR	MULLARD	VA8650	2
R3		4M0 0·1% WIRE WOUND	MANN		–
R4		NOT USED			
R5	000106	10M 5% 1/4W CARBON	MULLARD	CR25	5
R6	000392	3K9 " " "	"	"	2
R7	000106	10M " " "	"	"	–
R8	019761	9K76 1% 50ppm M.F.	HOLCO	H8	1
R9	090001	P.T.C. THERMISTOR	MULLARD	VA8650	–
R10		NOT USED			–
R11	000106	10M 5% 1/4W CARBON	MULLARD	CR25	–
R12	000563	56K " " "	"	"	2
R13	000563	56K " " "	"	"	–
R14	000104	100K " " "	"	"	6
R15	000243	24K " " "	"	"	1
R16	000682	6K8 " " "	"	"	1
R17	000103	10K " " "	"	"	3
R18	000107	100M " " "	"	"	1
R19	000104	100K " " "	"	"	–
R20	041505	15M 1% 100ppm CF	ALLEN BRADLEY	CC	2
R21	041505	15M " " "	"	"	–
R22	000222	2K2 5% 1/4W CARBON	MULLARD	CR25	2
R23	000391	390R " " "	"	"	1

NOTES CIRCUIT DIAGRAM. = 430303
CHECK PROCEDURE = 460303
CHECK LIST. = 470303
SEE SHEET 2 FOR LATEST ISSUE

ISS	1	2c	3	4	5	6	7c	8	9	10	11	12	13	14
E.C.O.	RELEASED	ECO 840	ECO 857	ECO 900	930.933				1109	1115	1134	1175	1217	1300
DATE	5-12-78	27-2-79	4.5.79	20-6-79	13-7-79	25-10-79	5-1-80	6-FEB80	18.4.80	3.6.80	17.6.80	1.12.80	18.8.81	30-5-82
CHKD	MD	MD	MD	MD	MD	MD	MD	MD	MD	MD	MD	MD	MD	MD

DATE 10-10-78
DRAWN B.J.
CHECKED D.C.
APPROVED
DATE

datron ELECTRONICS LTD

TITLE 1071 OHMS P.C.B ASSY.

DRAWING NUMBER 400303 SHEET 2 12

J.W. 1164

DESIGNATOR	DATRON PART No.	DESCRIPTION	PRINCIPAL MANUFACTURER	MANUFACTURER'S PART No.	No. USED Per Assy
R24	070097	57K048 ·01% WIREWOUND.	MANN		1
R25	070098	570K48 ·01% WIREWOUND.	MANN		1
R26	063204	200k POT CERMET	BECKMANN	72 P	2
R27	063204	200K " "	"	"	–
R28	000105	1M 5% 1/4W CARBON	MULLARD	CR25	4
R29	070096	5K704B ·01% WIREWOUND	MANN		1
R30	070095	1K2677 ·01% WIREWOUND	MANN		2
R31	070095	1K2677 " "	"		–
R32	000392	3K3 5% 1/4W CARBON	MULLARD	CR25	1
R33	000154	150K 5% 1/4W CARBON	MULLARD	CR25.	1
R34	000561	560R " " "	"	"	1
R35	000106	10M 5% 1/4W CARBON	MULLARD	CR25	–
R36	041005	10M 1% 100ppm CF	ALLEN BRADLEY	CC	1
R37	090049	18M MATCHED PAIR	HOLCO		1 PAIR
R38		18M			–
R39		F.S.V			–
R40		F.S.V			–
R41	000473	47K 5% 1/4W CARBON	MULLARD	CR25	3
R42	000624	620K " " "	"	"	1
R43	000473	47K " " "	"	"	–
R44	000102	1K " " "	"	"	2
R45	000102	1K " " "	"	"	–
R46	000562	5K6 " " "	"	"	2

NOTES.

SEE SHEET 2 FOR LATEST ISSUE

ISS												
E.C.O.												
DATE												
CHKD.												

DATE 10-10-78
DRAWN B.J.
CHECKED
APPROVED
DATE

datron ELECTRONICS LTD

TITLE 1071 OHMS P.C.B ASSY.

DRAWING NUMBER 400303 3 12

J.W. 1164

DESIGNATOR	DATRON PART No.	DESCRIPTION	PRINCIPAL MANUFACTURER	MANUFACTURER'S PART No.	No. USED Per Assy.
R47	000473	47K 5% 1/4W CARBON	MULLARD	CR25	—
R48	000433	43K " " "	"	"	1
R49	000392	3K9 " " "	"	"	—
R50	000562	5K6 " " "	"	"	—
R51	000105	1M " " "	"	"	—
R52	000104	100K " " "	"	"	—
R53	000273	27K " " "	"	"	2
R54	000104	100K " " "	"	"	—
R55	000105	1M " " "	"	"	—
R56	000824	820K " " "	"	"	—
R57	000104	100K " " "	"	"	—
R58	000273	27K " " "	"	"	—
R59	000104	100K " " "	"	"	—
R60	000123	12K " " "	"	"	1
R61	000334	330K " " "	"	"	1
R62	000222	2K2 " " "	"	"	—
R63	000223	22K " " "	"	"	1
R64	000333	33K " " "	"	"	2
R65	000821	820R " " "	"	"	1
R66	000105	1M " " "	"	"	—
R67	000474	470K " " "	"	"	1
R68	000124	120K " " "	"	"	1
R69	000103	10K " " "	"	"	—

NOTES

SEE SHEET 2 FOR LATEST ISSUE

ISS											
DRN											
DATE											
CHKD											

DATE 10-10-78

DRAWN B.J.

CHECKED

APPROVED

DATE

datron ELECTRONICS LTD

TITLE 1071 OHMS. P.C.B ASSY

DRAWING NUMBER 400303

SHEET 4 OF 12

DESIGNATOR	DATRON PART No	DESCRIPTION	PRINCIPAL MANUFACTURER	MANUFACTURER'S PART No	No. USED Per Assy.
R70	000221	220R 5% 1/4W CARBON	MULLARD	CR25	1
R71	000103	10k 5% 1/4W CARBON	MULLARD	CR25	—
R72	000333	33k 5% 1/4W CARBON	MULLARD	CR25	—
R73	000823	82k 5% 1/4W CARBON	MULLARD	CR25	1
R74	000106	10M 5% 1/4W CARBON	MULLARD	CR25	—
AN1	090017	100k x 7 2% NETWORK	BECKMAN	764-1-R100k	1

NOTES.

SEE SHEET 2 FOR LATEST ISSUE

ISS											
DRN											
DATE											
CHKD											

DATE 3.6.80

DRAWN IL

CHECKED

APPROVED

DATE

datron ELECTRONICS LTD

TITLE 1071 OHMS PCB. ASSY.

DRAWING NUMBER 400303

SHEET 5 OF 12

DESIGNATOR	DATRON PART No.	DESCRIPTION	PRINCIPAL MANUFACTURER	MANUFACTURER'S PART No.	No. USED Per Assy.
C1	120029	6800pF 20% 100V POLYCARB	WIMA	FKC-2 MIN	1
C2	120027	1000pF 20% 100V POLYCARB	WIMA	FKC-2 MIN	1
C3	102470	47pF 500V CER DISC	ERIE	801	2
C4	102470	47pF 500V CER DISC	ERIE	801	–
C5	102222	2n2F 500V CER DISC	ERIE	801	1
C6	101103	·01μF 250V CER DISC	ERIE	801	4
C7	102332	3n3F 500V CER DISC	ERIE	801	1
C8	120014	2·2μF 10% 63V POLYCARB	ASHCROFT	A2B2221B.	2
C9	120014	2·2μF " " "	"	"	–
C10	110013	0·1μF 10% 250V POLYESTER	MULLARD	C280AE/P100K.	2
C11	150001	22μF 20% 16V DIP TANT	UNION CARBIDE	K22E16	2
C12	101103	·01μF 250V CER DISC	ERIE	801.	–
C13	150001	22μF 20% 16V DIP TANT	UNION CARBIDE	K22E16	–
C14	101103	·01μF 250V CER DISC	ERIE	801	–
C15	102100	10pF 500V CER DISC	"	"	2
C16	102100	10pF " " "	"	"	–
C17	102102	1nF " " "	"	"	1
C18	120021	0·47μF 10% 63V POLYCARB	ASHCROFT	A2B4711B	1
C19	150014.	680nF 20% 35V DIP TANT	UNION CARBIDE	KR68E35	1
C20	150016	1μF 20% 35V DIP TANT	UNION CARBIDE	K1R0E35.	1
C21	150020	10μF 20% 25V DIP TANT	UNION CARBIDE	K10E25.	2
C22	101103	·01μF 250V CER DISC	ERIE	801	–
C23	150020	10μF 20% 25V DIP TANT	UNION CARBIDE	K10E25.	–

NOTES.

SEE SHEET 2 FOR LATEST ISSUE

ISS.										
E.C.O.										
DATE										
CHKD.										

DATE 10-10-78
DRAWN B.J.
CHECKED
APPROVED
DATE

datron ELECTRONICS LTD

TITLE 1071 OHMS PCB ASSY.

DRAWING NUMBER 400303. SHEET 6 OF 12

J.W. 1164

DESIGNATOR	DATRON PART No	DESCRIPTION	PRINCIPAL MANUFACTURER	MANUFACTURER'S PART No	No. USED Per Assy
C24	102101	100pF 10% 500V CER DISC	ITT	CD 10	3
C25	102101	100pF 10% 500V CER DISC	ITT	CD 10	–
C26	102101	100pF 10% 500V CER DISC	ITT	CD10	–
C27	110013	100nF 20% 250v POLYESTER	MULLARD	C280AE/P100K	–
D1	213001	10V 5W ZENER	MOTOROLA	1N5347	4
D2	213001	10V " "	"	"	–
D3		NOT USED			
D4		NOT USED			
D5		NOT USED			
D6		NOT USED			
D7	210027	2V7 400mW ZENER	MULLARD	BZY88C2V7	1
D8	200001	Si G.P.	FAIRCHILD	1N4148	11
D9		NOT USED			
D10	213001	10V 5W ZENER	MOTOROLA	1N5347	–
D11	213001	10V " "	"	"	–
D12	200001	Si G.P.	FAIRCHILD	1N4148	–
D13		NOT USED			
D14	200008	Si LOW LEAKAGE.	FAIRCHILD	1N458A	3
D15	200008	Si " "	"	"	–
D16	210075	7V5 400mW ZENER	MULLARD	BZY88C7V5	1
D17	210120	12V 400mW ZENER	"	BZY88C12	1

NOTES.

SEE SHEET 2 FOR LATEST ISSUE

ISS.										
E.C.O.										
DATE										
CHKD.										

DATE 10-10-78
DRAWN B.J.
CHECKED
APPROVED
DATE

datron ELECTRONICS LTD

TITLE 1071 OHMS PCB ASSY.

DRAWING NUMBER 400303 SHEET 7 OF 12

J.W. 1164

DESIGNATOR	DATRON PART No.	DESCRIPTION	PRINCIPAL MANUFACTURER	MANUFACTURER'S PART No.	No. USED Per Assy.
D18	200001	Si G.P.	FAIRCHILD	IN4148	–
D19	200001	Si "	"	"	–
D20	200001	Si "	"	"	–
D21	200001	Si "	"	"	–
D22	200001	Si "	"	"	–
D23	200001	Si "	"	"	–
D24		NOT USED			
D25	200001	Si "	"	"	–
D26	200001	Si "	"	"	–
D27	200001	Si "	"	"	–
D28	200008	Si LOW LEAKAGE	"	IN458A	–
Q1	230027	N-CHAN J FET SELECTED	TELEDYNE	U3114E.	7
Q2	230027	" " "	"	"	–
Q3	230027	" " "	"	"	–
Q4	230027	" " "	"	"	–
Q5	230002	N-CHAN J FET	SILICONIX	U1994E	6
Q6	230027	N-CHAN J FET SELECTED	TELEDYNE	U3114E	–
Q7	230027	" " "	"	"	–
Q8	230002	N-CHAN J FET.	SILICONIX	U1994E.	–
Q9	230002	" "	"	"	–
Q10	240017	Si NPN SUPERMATCH PAIR	NATIONAL	LM394	1
Q11	230029	N-CHAN J FET	SILICONIX	J309	4

NOTES

SEE SHEET 2 FOR LATEST ISSUE

ISS											
ECO											
DATE											
CHKD											

DATE 10-10-78
DRAWN B.J.
CHECKED
APPROVED
DATE

datron ELECTRONICS LTD

TITLE 1071 OHMS PCB ASSY.

DRAWING NUMBER 400303

SHEET 8 OF 12

J.W. 1164

DESIGNATOR	DATRON PART No	DESCRIPTION	PRINCIPAL MANUFACTURER	MANUFACTURER'S PART No.	No. USED Per Assy.
Q12		NOT USED			
Q13	240012	Si NPN	NATIONAL	2N3053	1
Q14	230027	N-CHAN J FET	TELEDYNE	U3114E	–
Q15	250001	Si PNP	NATIONAL	BC214	2
Q16	250011	Si PNP	NATIONAL	BC327	1
Q17	240001	Si NPN	NATIONAL	BC184	2
Q18	240001	Si NPN	NATIONAL	BC184	–
Q19	250001	Si PNP	NATIONAL	BC214	–
Q20	230002	N-CHAN J FET	SILICONIX	U1994E	–
Q21	230029	N-CHAN J FET	"	J309.	–
Q22	230029	" "	"	"	–
Q23	230002	" "	"	U1994E	–
Q24	230002	" "	"	"	–
Q25	230029	" "	"	J309.	–

NOTES.

SEE SHEET 2 FOR LATEST ISSUE

ISS											
ECO											
DATE											
CHKD											

DATE 10-10-78
DRAWN B.J.
CHECKED
APPROVED
DATE

datron ELECTRONICS LTD

TITLE 1071 OHMS P.C.B. ASSY.

DRAWING NUMBER 400303

SHEET 9 OF 12

J.W. 1164

DESIGNATOR	DATRON PART No.	DESCRIPTION	PRINCIPAL MANUFACTURER	MANUFACTURER'S PART No.	No. USED Per Assy.
M1	280022	QUAD BILATERIAL SWITCH	MOTOROLA	MC 14016 BCP	2
M2	280022	" " "	"	"	—
M3	260069	411 OP AMP	NATIONAL	LF411CH	1
M4	260026	OP AMP	NATIONAL	LM212	1
M5	280025	QUAD ANALOGUE SWITCH	MOTOROLA	MC 14066 BCP	1
M6	280072	M'STABLE /ASTABLE M'VIBR	R.C.A.	CD 4047 AE	1
M7	280015	QUAD LATCH	MOTOROLA	MC 14076 BCP	2
M8	280015	" "	"	"	—
M9	280011	DUAL D FLIP FLOP	MOTOROLA	MC 14013 BCP	1

NOTES.

SEE SHEET 2 FOR LATEST ISSUE

ISS											
ECO											
DATE											
CHKD											

DATE 6-12-78
DRAWN B. J
CHECKED
APPROVED
DATE

datron ELECTRONICS LTD

TITLE 1071 OHMS PCB ASSY

DRAWING NUMBER 400303

SHEET 10 OF 12

J.W. 1164

DESIGNATOR	DATRON PART No.	DESCRIPTION	PRINCIPAL MANUFACTURER	MANUFACTURER'S PART No.	No. USED Per Assy.
RL1	330019	RELAY 4-P2W 7v HOLD-IN	P&B.	SEE DRAWING	1
	400379/2	WIRE / TERMINAL ASSY			6
	410099-6	OHMS P.C.B.			1
	459112	RELAY BRACKET.	KDP		1
	540008	7/0·2 PTFE INSULATED WHITE		TYPE C	280mm.
	540002	22 SWG TINNED COPPER WIRE.			A/R
	590001	SLEEVE MAX CABLE Ø 3·0	HELLERMANN ELECTRIC	H15 x 20mm BLK HELSYN	9
	590055	SLEEVE Ø 1·0 SIL. RUBBER	HELLERMANN ELECTRIC	H15 CONT. BLACK	30mm
	602001	F.S.V. TERMINAL	MOLEX	02-04-1875	4
	571095/C	16 WAY AP\3M RIBBON CABLE	DATRON		1
	605060	14 WAY DIL SOCKET	ASTRALUX	ICL-143-S3T.	5
	605061	16 WAY DIL SOCKET	ASTRALUX	ICL-163-S6T.	2
J1	605053	12 WAY POLARISED SOCKET	MOLEX	22-01-2125	1

NOTES.

SEE SHEET 2 FOR LATEST ISSUE

ISS											
ECO											
DATE											
CHKD											

DATE 10-10-78
DRAWN B.J.
CHECKED
APPROVED
DATE

datron ELECTRONICS LTD

TITLE 1071 OHMS P.C.B. ASSY.

DRAWING NUMBER 400303

SHEET 11 OF 12

J.W. 1164

DESIGNATOR	DATRON PART No.	DESCRIPTION	PRINCIPAL MANUFACTURER	MANUFACTURER'S PART No.	No. USED Per Assy.
	611004	SCREW M3X6mm STEEL POZIPAN ZINC PLATED	GKN		1
	613005	WASHER M3 INT/SHAKEPROOF	GKN DISTRIBUTORS	ZINC PLATED	2
	615002	NUT M3 FULL HEX STEEL		ZINC PLATED	1
	615005	NUT 3-48 UNC FULL HEX	STEEL	" "	1
	617010	NYLATCH PLUNGER HN3P	ORDER FROM C.J.FOX & SONS.	HN3P-32-4-1	4
	617011	NYLATCH GROMMET HN3G		HN3G-32-1	4
	618002	TO5 MOUNTING PAD	JERMYN	TO518-004D	1
	620003	SOLDER PCB TERMINAL LUG	HARWIN	H2105A	8
	630024	STANDARD STEATITE INSUL BEAD.	PARK ROYAL PORCELAIN Co.	TYPE No2 (16 SWG)	8
	620007	TEST POINT TERMINAL	MICROVAR	C30	11

NOTES.

SEE SHEET 2 FOR LATEST ISSUE

ISS.												
E.C.O.												
DATE												
CHKD.												

DATE 10-10-78	datron ELECTRONICS LTD
DRAWN B.J.	TITLE 1071 OHMS PCB ASSY
CHECKED	
APPROVED	
DATE	DRAWING NUMBER 400303 — SHEET 12 OF 12

J.W. 1164

DESIGNATOR	DATRON PART No.	DESCRIPTION	PRINCIPAL MANUFACTURER	MANUFACTURER'S PART No.	No. USED Per Assy.
R1	000333	33K. 5%. ¼W CARBON	MULLARD	CR25	2
R2	000824	820K 5% ¼W CARBON	MULLARD	CR25	1
R3	000223	22K 5% ¼W CARBON	MULLARD	CR25	2
R4	000222	2K2 5% ¼W CARBON	MULLARD	CR25	3
R5	000104	100K 5% ¼W CARBON	MULLARD	CR25	3
R6	000104	100K 5% ¼W CARBON	MULLARD	CR25	–
R7	000104	100K 5% ¼W CARBON	MULLARD	CR25	–
R8	000102	1K 5% ¼W CARBON	MULLARD	CR25	2
R9	000105	1M 5% ¼W CARBON	MULLARD	CR25	3
R10	000105	1M 5% ¼W CARBON	MULLARD	CR25	–
R11	000105	1M 5% ¼W CARBON	MULLARD	CR25	–
R12	000103	10K 5% ¼W CARBON	MULLARD	CR25	5
R13	000103	10K 5% ¼W CARBON	MULLARD	CR25	–
R14	000103	10K 5% ¼W CARBON	MULLARD	CR25	–
R15	000222	2K2 5% ¼W CARBON	MULLARD	CR25	–
R16	000223	22K 5% ¼W CARBON	MULLARD	CR25	–
R17	000103	10K 5% ¼W CARBON	MULLARD	CR25	–
R18	015112	51K1 1% ⅛W M.F	WELWYN	4033C	1
R19	070123	900R 0·1% 5 ppm/°c W.W.	MANN (KELVIN)	MX 125-B (EP-01)	1
R20	070124	90R 0·1% 5 ppm/°c W.W.	MANN	MX 125-B	1
R21	070125	9R 0·1% 5 ppm/°c W.W.	MANN	AX 175 BT	1
R22	070126	1R 0·1% 5 ppm/°c W.W.	MANN	LR500BU	1
R23	000222	2K2 5% ¼W CARBON	MULLARD	CR25	–

NOTES

SEE SHEET 2 FOR LATEST ISSUE

	9	10	11
	1217	1257	1529
	18.9.81	24.11.81	16.5.83
	MD	MD	MD

ISS	A	B	C	1st	2	3	4	5	6	7	8
E.C.O					972,987	8888	1048	1087.1099. 1110	1116	1189	1280
DATE	17 JULY 79	21 AUG 79	24.9.79	24.9.79	25-10-79	4-1-80	16.1.80	14.4.80	3.6.80	17.12.80	26.2.81
CHKD	MD	MD	MD	MD	MD	MD	MD	MD	MD	MD	MD

DATE 17 JULY 79

DRAWN W.G. SMITH

CHECKED

APPROVED

DATE

datron ELECTRONICS LTD

TITLE CURRENT P.C.B

DRAWING NUMBER 400304

SHEET 2 OF 7

J.W. 1164

DESIGNATOR	DATRON PART No	DESCRIPTION	PRINCIPAL MANUFACTURER	MANUFACTURER'S PART No.	No USED Per Assy.
R24	000102	1K 5% ¼W CARBON	MULLARD	CR25	–
R25	070127	0R1 0.1% 5ppm/°c W.W.	MANN	LR500BU	1
R26	000333	33K 5% ¼W CARBON	MULLARD	CR25	–
R27 ●	000221	220R 5% ¼W CARBON	MULLARD	CR25	2
R28 ●	000221	220R 5% ¼W CARBON	MULLARD	CR25	–
R29	000103	10k 5% ¼W CARBON	MULLARD	CR25	–
C1	150020	10uF 25V TANT	UNION CARBIDE	K10E25	2
C2	150020	10uF 25V TANT	UNION CARBIDE	K10E25	–
C3	101103	10nF 250V CER DISC	ERIE	801	1
C4	150014	680nF 35V 20% TANT	UNION CARBIDE	K68E35	1
C5	150016	1uF 35V TANT	UNION CARBIDE	K1R0E35	2
C6	150016	1uF 35V TANT	UNION CARBIDE	K1R0E35	–
C7 *	102471	470pF 10% 500V CER DISC	ITT	CD10	1
C7 +	102331	330pF 10% 500V CER DISC	ITT	CD10	
C8	102101	100pF 10% 500V CER DISC	ITT	CD10	1
C9	110013	100nF 20% POLYESTER	MULLARD	C280AEP100K	1

NOTES. * VALUE CORRECT IF R19 MANUFACTURED BY MANN - TYPE MX125-B

+ VALUE CORRECT IF R19 MANUFACTURED BY KELVIN - TYPE EP-01

● R27 + 28 NOT USED WITH RL1, RL2 ALTERNATIVE

SEE SHEET 2 FOR LATEST ISSUE

ISS												
E.C.O												
DATE												
CHKD												

DATE 17 JULY 79

DRAWN W.G. SMITH

CHECKED

APPROVED

DATE

datron ELECTRONICS LTD

TITLE CURRENT P.C.B.

DRAWING NUMBER 400304

SHEET 3 OF 7

J.W. 1164

DESIGNATOR	DATRON PART No.	DESCRIPTION	PRINCIPAL MANUFACTURER	MANUFACTURER'S PART No.	No. USED Per Assy.
D1	200001	75mA. 75V G.P. SI DIODE.	FAIRCHILD.	IN414B.	5
D2	200008	200mA.125V. L.L. SI DIODE.	FAIRCHILD.	IN458A.	3
D3	200008	200mA.125V. L.L. SI DIODE.	FAIRCHILD.	IN458A.	—
D4	200008	200mA.125V. L.L. SI DIODE.	FAIRCHILD.	IN458A.	—
D5	200001	75mA. 75V. G.P. SI DIODE.	FAIRCHILD.	IN414B	—
D6	200001	75mA. 75V. G.P. SI DIODE.	FAIRCHILD.	IN414B	—
D7	200001	75mA. 75V. G.P. SI DIODE.	FAIRCHILD.	IN414B	—
D8	200001	75mA. 75V. G.P. SI DIODE.	FAIRCHILD.	IN414B	—
D9		NOT USED			
D10		NOT USED			
D11	220020	FET DIODE 100pA I_R.	TELEDYNE.	PAD100	2
D12	220020	FET DIODE 100pA I_R.	TELEDYNE.	PAD100	—
D13	200022	3A. 400V. G.P. SI DIODE.	MOTOROLA	BY252	4
D14	200022	3A. 400V. G.P. SI DIODE.	MOTOROLA	BY252	—
D15	200022	3A. 400V. G.P. SI DIODE.	MOTOROLA	BY252	—
D16	200022	3A. 400V. G.P. SI DIODE.	MOTOROLA	BY252	—

NOTES

SEE SHEET 2 FOR LATEST ISSUE

ISS											
ECO											
DATE											
CHKD											

DATE 17 JULY 79
DRAWN W.G. SMITH
CHECKED
APPROVED
DATE

datron ELECTRONICS LTD

TITLE CURRENT P.C.B

DRAWING NUMBER 400304 SHEET 4 OF 7

J.W. 1164

DESIGNATOR	DATRON PART No	DESCRIPTION	PRINCIPAL MANUFACTURER	MANUFACTURER'S PART No.	No USED Per Assy.
Q1		NOT USED			
Q2	250001	SI P.N.P. TRANSISTOR.	NATIONAL.	BC214/TO18	2
Q3		NOT USED			
Q4	250001	SI P.N.P TRANSISTOR.	NATIONAL.	BC214/TO18	—
Q5		NOT USED			
Q6		NOT USED			
Q7	230003	N-CHAN J FET.	TELEDYNE.	U1899 JF	1
Q8	230035	N-CHAN J FET.	TELEDYNE.	U1897 JF	2
Q9	230002	N-CHAN J FET.	TELEDYNE.	U1994 JF	1
Q10	230035	N-CHAN J FET.	TELEDYNE.	U1897 JF	—
M1	280015	QUAD D-TYPE LATCH	MOTOROLA	MC14076 BCP	2
M2	280011	DUAL D FLIP FLOP	MOTOROLA	MC14013 BCP	1
M3	280015	QUAD D-TYPE LATCH	MOTOROLA	MC14076 BCP	—
M4	270059	7 × DARLINGTON DRIVER	SPRAGUE/EXAR	ULN2004A/XR2204CP	1
M5	260027	714 OP AMP	FAIRCHILD	μA 714HC.	1

NOTES.

SEE SHEET 2 FOR LATEST ISSUE

ISS											
ECO											
DATE											
CHKD											

DATE 17 JULY 79
DRAWN W.G. SMITH
CHECKED
APPROVED
DATE

datron ELECTRONICS LTD

TITLE CURRENT P.C.B

DRAWING NUMBER 400304 SHEET 5 OF 7

J.W. 1164

DESIGNATOR	DATRON PART No.	DESCRIPTION	PRINCIPAL MANUFACTURER	MANUFACTURER'S PART No.	No. USED Per Assy.
AN1		NOT USED			
RL1 *	330017	RELAY REED LOW THERMAL.	OMRON	G2E 182PH	2
RL2 *	330017	RELAY REED LOW THERMAL.	OMRON	G2E 182PH	-
RL3	330019	RELAY 4P2W 7v HOLD-IN	P&B	SEE DRAWING	1
RL4	330018	RELAY 2P2W 7v HOLD-IN	P&B	SEE DRAWING	1
	400319/1	MOLEX TERMINAL/WIRE ASSY	DATRON		1
	410104-5A	PRINTED CIRCUIT BOARD			1
	459112	RELAY BRACKET			2
	540008	7/·2 PTFE INSULATED WHITE WIRE		TYPEC	807mm TOTAL
	620007	TEST POINT TERMINAL	MICROVAR	C30	5
	590001	SLEEVE BLACK	HELLERMAN ELECTRIC	H16x20mm HELYSYN	16
	605056	CRIMP TERMINAL	MOLEX	4809-TL	3
J1	571095/C	16 WAY AP/3M RIBBON CABLE	DATRON		1
	605060	14 WAY D.I.L. SOCKET	ASTRALUX OR JERMYN	ICL-143-SST	1
	605061	16 WAY D.I.L. SOCKET	ASTRALUX OR JERMYN	ICL-163-SGT	3
	605051	4 WAY POLARISED SOCKET	MOLEX	(22-01-2045) 6471-4-1	1
J3	605052	8 WAY POLARISED SOCKET	MOLEX	(22-01-2085) 6471-8-1	1
J2	605053	12 WAY POLARISED SOCKET	MOLEX	(22-0-2125) 6471-12-1	1
	605057	CRIMP TERMINAL	MOLEX	4809-GL	8

NOTES * ALTERNATIVE 330014 OR 330013

ISS											
E.C.O.											
DATE											
CHKD											

DATE 17 JULY 79
DRAWN W.G.SMITH
CHECKED
APPROVED
DATE

datron ELECTRONICS LTD
TITLE CURRENT P.C.B.
DRAWING NUMBER 400304
SHEET 6 OF 7

J.W. 1164

DESIGNATOR	DATRON PART No.	DESCRIPTION	PRINCIPAL MANUFACTURER	MANUFACTURER'S PART No.	No. USED Per Assy.
	611004	SCREW M3x6 POSI PAN			2
	613005	WASHER M3 INT/SHAKEPROOF			2
	615002	NUT M3 FULL HEX			2
	615005	NUT 3-48 UNC FULL HEX			2
	613014	WASHER M2.5 INT SHAKEPROOF			2
	617010	NYLATCH PLUNGER	C.J. FOX & SON	HN3P-32-4-1	4
	617011	NYLATCH GROMMET	C.J. FOX & SON	HN3G	4.
	620003	SOLDER P.C.B TERMINAL LUG	HARWIN	H2105A	13
	630024	STANDARD STEATITE INSUL. BEAD	PARK ROYAL PORCELAIN CO.	TYPE Nº 2 (16SWG.)	24
	920082	FUSE HOLDER. 20mm P/MTG	BELLING & LEE	L2002	1
	920071	FUSE 1·6A QUICK ACTING 20mm	BESWICK	S501-1·6-F-250V	1
	590004	SLEEVE - PTFE	HELLERMANN ELECTRIC	FE10	A/R
	590055	SLEEVE Ø1·0 SIL. RUBBER	" "	HIS CONT. BLACK	30mm

NOTES.

SEE SHEET 2 FOR LATEST ISSUE

ISS.												
E.C.O.												
DATE												
CHKD												

DATE 17 JULY 79
DRAWN W.G.SMITH
CHECKED
APPROVED
DATE

datron ELECTRONICS LTD
TITLE CURRENT P.C.B
DRAWING NUMBER 400304
SHEET 7 OF 7

J.W. 1164

DESIGNATOR	DATRON PART No.	DESCRIPTION	PRINCIPAL MANUFACTURER	MANUFACTURER'S PART No.	No. USED Per Assy.
R1	000123	12K 5% 1/4W CARBON	MULLARD	CR25	3
R2	000332	3K3 " " "	"	"	6
R3	000332	3K3 " " "	"	"	–
R4	000103	10K " " "	"	"	6
R5	000123	12K " " "	"	"	–
R6	000222	2K2 " " "	"	"	2
R7	000222	2K2 " " "	"	"	–
R8	000123	12K " " "	"	"	–
R9	000333	33K " " "	"	"	1
R10	000562	5K6 " " "	"	"	1
R11	000103	10K " " "	"	"	–
R12	000105	1M " " "	"	"	1
R13	000332	3k3 " " "	"	"	–
R14	000103	10k " " "	"	"	–
R15	000332	3k3 " " "	"	"	–
R16	000332	3k3 " " "	"	"	–
R17	000681	680R " " "	"	"	2
R18	000681	680R " " "	"	"	–
R19	000332	3k3 " " "	"	"	–
R20	000103	10k " " "	"	"	–
R21	000103	10K " " "	"	"	–
R22	000103	10k " " "	"	"	–

NOTES

SEE SHEET 5 FOR LATEST ISSUE

ISS.	1	2	3	4	5	6	7	8	9
ECO.	RELEASED	902/887	972	981	1021 1035	1085	1166	1199	1329
DATE	26-3-79	15-6-79	25-10-79	6-11-79	2-1-80	22.4.80	24.9.80	24.2.81	8-7-82
CHKD.	MD	MD	MD	MD	MD	MD	MD	MD	MD

DATE 5-3-79
DRAWN BJ
CHECKED MD
APPROVED
DATE

datron ELECTRONICS LTD

TITLE REAR INPUT / RATIO ASSY.

DRAWING NUMBER 400307. SHEET 3 OF 8

J.W. 1164

DESIGNATOR	DATRON PART No.	DESCRIPTION	PRINCIPAL MANUFACTURER	MANUFACTURER'S PART No.	No. USED Per Assy.
C1	150022	2μ2F 20% 35V DIP TANT	UNION CARBIDE	K2R2E35	2
C2	150022	2μ2F 20% 35v DIP. TANT	UNION CARBIDE	K2R2E35	–
C3	150020	10μF 20% 25v DIP TANT	UNION CARBIDE	K10E25	2
C4	150020	10μF 20% 25V DIP TANT	UNION CARBIDE	K10E25	–
C5	102101	100pF 10% 500V CER DISC	ITT	CD10	1
C6	110013	100nF 20% 250v POLYESTER	MULLARD	C280AEP100K	1
C7	150014	680nF 20% 35V DIP TANT	UNION CARBIDE	KR68E35	2
C8	150014	680nF 20% 35V DIP TANT	UNION CARBIDE	KR68E35	–

NOTES.

SEE SHEET 2 FOR LATEST ISSUE

ISS.											
E.C.O.											
DATE											
CHKD.											

DATE 23.9.80
DRAWN IL
CHECKED
APPROVED
DATE

datron ELECTRONICS LTD

TITLE REAR INPUT/RATIO 1061/1071

DRAWING NUMBER 400307 SHEET 4 OF 8

J.W. 1164

DESIGNATOR	DATRON PART No.	DESCRIPTION	PRINCIPAL MANUFACTURER	MANUFACTURER'S PART No.	No. USED Per Assy.
D1	200001	75mA 75V GP Si DIODE	FAIRCHILD	IN4148.	8
D2	200001	" " " " "	"	"	–
D3	200001	" " " " "	"	"	–
D4	200001	" " " " "	"	"	–
D5	200001	" " " " "	"	"	–
D6	200001	" " " " "	"	"	–
D7	200001	" " " " "	"	"	–
D8	200001	" " " " "	"	"	–
Q1	240001	Si NPN TRANSISTOR	NATIONAL	BC184 / TO18	4
Q2	240001	" " "	"	"	–
Q3	250001	Si PNP TRANSISTOR	NATIONAL	BC214 / TO18	2
Q4	250001	" " "	"	"	–
Q5	240001	Si NPN TRANSISTOR	NATIONAL	BC184 / TO18	–
Q6	240001	" " "	"	"	–
M1	280011	DUAL D FLIP-FLOP	MOTOROLA	MC14013 BCP	1
J1	604036	CON. PIN. STRIP OF 10. HORIZ. TYPE.	AMP	163740-8	2
J2, J3	605052	8 WAY POLARISED SOCKET.	MOLEX	(22-01-2085) 6471-8-1	2

NOTES

SEE SHEET 3 FOR LATEST ISSUE

ISS												
E.C.O												
DATE												
CHKD												

DATE 5-3-79
DRAWN B.J.
CHECKED MD

datron ELECTRONICS LTD

TITLE REAR INPUT / RATIO ASSY.

DRAWING NUMBER 400307 SHEET 5 OF 8

J.W. 1164

DESIGNATOR	DATRON PART No.	DESCRIPTION	PRINCIPAL MANUFACTURER	MANUFACTURER'S PART No.	No. USED Per Assy
J4 & J6	604033	FLAT WAFER PIN (4WAY GOLD)	MOLEX	22-27-2041 / GOLD	3
J5	605051	4 WAY POLARISED SOCKET	MOLEX	22-01-2045	1
	400379/4	WIRE/TERMINAL ASSY.	HOLDEN CORDS		6
	400379/5	" " "	" "		4
RL1 & RL4.	330018	RELAY 2P2W 7v HOLD-IN	P&B	SEE DRAWING	2
RL2 & RL3.	330019	RELAY 4P2W 7v HOLD-IN	P&B	SEE DRAWING	2
	410106-5	COMPONENT PCB.			1
	410132-4	RELAY PCB.			1
	450185-1	SOCKET PLATE			1
	450241-1	RELAY BRACKET			1
	540002	22SWG TINNED COPPER WIRE			A/R
	540008	7/2 PTFE INS. WHITE WIRE			140mm

NOTES.

SEE SHEET 3 FOR LATEST ISSUE

ISS.												
E.C.O												
DATE												
CHKD.												

DATE 5-3-79
DRAWN B.J.
CHECKED MD
APPROVED
DATE

datron ELECTRONICS LTD

TITLE REAR INPUT / RATIO ASSY

DRAWING NUMBER 400307 SHEET 6 OF 8

J.W. 1164

DESIGNATOR	DATRON PART No.	DESCRIPTION	PRINCIPAL MANUFACTURER	MANUFACTURER'S PART No.	No. USED Per Assy.
	590001	SLEEVE MAYCABLE ϕ 3·0mm	HELLERMANN ELECTRIC.	H15 x 20mm BLK HELSYN	25
	590004.	SLEEVE - PTFE	" "	FE 10	A/R
	602007	RELAY SOCKET 2 POLE PCB MOUNT	POTTER & BRUMFIELD	27E 212	1
	602009	RELAY SOCKET 4 POLE PCB MOUNT	" "	27E 213	1
J10, J11	604008	7 WAY PLUG PANEL MOUNT	PVE CONNECTORS	M7P	2
	605009	7 WAY SOCKET	PVE CONNECTOR	M7S	2
	605060	14 WAY DIL SOCKET	ASTRALUX OR JERMYN	ICN-246-S4T or A23-2023Y	1
	605057	CRIMP TERMINAL	MOLEX	4800-GL	2
	606001	LOCKING HOOD	PVE CONNECTORS.	MHN	2
	606002	NUT	PVE CONNECTORS.	MN	2
	606003	WASHER	" "	MLW	2
	611004	SCREW M3 x 6mm STEEL POZI-PAN. ZINC PLATED . GKN.			7
	611007	SCREW M3 x 6mm STEEL POZI-CSK. ZINC PLATED . GKN.			7
	611016	" M3 x 8mm " " PAN " " "			4
	612020	STANDOFF NYLON M3 x 19 TRANSIPILLAR.	W.K. ELECTRONICS	TPI/6·5/19/M3/I/I	5

NOTES

SEE SHEET 5 FOR LATEST ISSUE

ISS											
ECO											
DATE											
CHKD											

DATE 5-3-79 | DRAWN BN | CHECKED MD | APPROVED | DATE

datron ELECTRONICS LTD

TITLE REAR INPUT / RATIO ASSY

DRAWING NUMBER 400307 | SHEET 7 OF 8

J.W. 1164

DESIGNATOR	DATRON PART No	DESCRIPTION	PRINCIPAL MANUFACTURER	MANUFACTURER'S PART No	No. USED Per Assy.
	613005	WASHER M3 INT/SHAKEPROOF ST.	GKN DISTRIBUTORS	ZINC PLATED	13
	615001	NUT 8BA FULL HEX STEEL		ZINC PLATED	2
	615002	" M3 " " "		" "	2
	630005	CLIP FOR P&B R10 2 POLE RELAY	POTTER & BRUMFIELD	20C249	1
	630028	CLIP FOR P&B R10 4 POLE RELAY	" "	20C250	1
	700069.	DPDT SLIDE SWITCH	WAYCOM	S-5022CD03-0 + 3/4" TRIGGER & STYLE 2/C PCB MOUNT, CONTACTS.	1

NOTES.

SEE SHEET 3 FOR LATEST ISSUE

ISS.											
ECO											
DATE											
CHKD											

DATE 5-3-79 | DRAWN BN | CHECKED MD | APPROVED | DATE

datron ELECTRONICS LTD

TITLE REAR INPUT / RATIO ASSY

DRAWING NUMBER 400307 | SHEET 8 OF 8

J.W. 1164

DESIGNATOR	DATRON PART No.	DESCRIPTION	PRINCIPAL MANUFACTURER	MANUFACTURER'S PART No.	No. USED Per Assy.
R1	000102	1KO 5% 1/4W CARBON	MULLARD	CR25	1
R2	000682	6K8 " " "	"	"	1
R3	090001	PTC THERMISTOR	MULLARD	VA8650	2
R4	090001	" "	"	"	–
R5	066102	1KO 3/8" SQ VERTICAL POT	BECKMAN	72XW	1
R6	000104	100K 5% 1/4W CARBON	MULLARD	CR25	1
R7	070128	21K51 0·1% WIRE WOUND	MANN	MX 125	1
R8	070066	10K 0·1% WIRE WOUND	MANN	MX 125	1
C1	101103	0·01μF 250V CER DISC	ITT	CD10K3100JS 5S5003C	2
C2	101103	0·01μF " " "	"	"	–
C3 *	102330	33pF 500V CER DISC	ITT	CD10PG33P0JS 5S5003C	1 *
C4	102330	33pF " " "	"	"	1
C5	110013	0·1μF 20% 250V POLYESTER	MULLARD	C280AE/P100K	1

NOTES. * ONLY REQUIRED WHEN M1 ALTERNATIVE (TYPE 101) IS USED.
CCT DIAG. 430308
CHECK PROC 460308. CHECK LIST 470308
SEE SHEET 2 FOR LATEST ISSUE

ISS.	1	2	3
E.C.O.	RELEASED	907	945
DATE	27·12·78	20.6.79	10.9.79
CHKD.	MD	MD	BJ

DATE 22-11-78
DRAWN B.J
CHECKED MD
APPROVED
DATE

datron ELECTRONICS LTD

TITLE ANALOGUE OUTPUT PCB ASSY.

DRAWING NUMBER 400308 SHEET 2 OF 4

DESIGNATOR	DATRON PART No.	DESCRIPTION	PRINCIPAL MANUFACTURER	MANUFACTURER'S PART No.	No. USED Per Assy.
D1	213001	10V 5W ZENER	MOTOROLA	1N5347	2
D2	213001	10V " "	"	"	–
M1 *	260002	OP AMP	FAIRCHILD	μA741C	1 *
M2	260026	OP AMP	NATIONAL	LM212H	1
	400379/4	WIRE / TERMINAL ASSY	HOLDEN CORDS.		5
	410107-3	P.C.B.			1
	450186-1	SOCKET PLATE.			1
	510600	7/·2 PVC INSUL (BLACK) WIRE			50mm
	510222	7/·2 PVC INSUL (RED) WIRE			50mm
	590001	SLEEVE MAX CABLE ϕ 3·0	HELLERMANN ELECTRIC	H15 x 20mm BLACK HELSYN	2
	605007	5 WAY SOCKET	PYE CONNECTORS	M55	1
J1	605052	8 WAY POLARISED SOCKET	MOLEX	(22-01-2085) 6471-8-1	1

NOTES. * M1 ALTERNATIVE 260025 (LM101).

SEE SHEET 2 FOR LATEST ISSUE

ISS.											
E.C.O.											
DATE											
CHKD.											

DATE 22-11-78
DRAWN B.J.
CHECKED
APPROVED
DATE

datron ELECTRONICS LTD

TITLE ANALOGUE OUTPUT PCB ASSY

DRAWING NUMBER 400308 SHEET 3 OF 4

DESIGNATOR	DATRON PART No.	DESCRIPTION	PRINCIPAL MANUFACTURER	MANUFACTURER'S PART No.	No. USED Per Assy.
	606001	LOCKING HOOD	PYE CONNECTORS	MHN	1
	606002	NUT	" "	MN	1
	606003	WASHER	" "	MLW	1
	612019	STANDOFF LOCKING TYPE 7/8"	NYLON: RICHCO	LCBS-14R	4
	620003	SOLDER PCB TERMINAL LUG	HARWIN	H2105A	2
	630024	INSULATING BEADS, STEATITE.		(TYPE No 2)	8.
	620007	TEST POINT TERMINAL	MICROVAR	C30	5
*	604006	5 WAY PLUG	PYE CONNECTORS.	MSP.	1.
*	611016	SCREW POSI-PAN M3 x 8			4
*	613005	SHAKEPROOF WASHER M3			4

NOTES: * FITTED AT FINAL ASSEMBLY.

SEE SHEET 2 FOR LATEST ISSUE

ISS												
ECO												
DATE												
CHKD												

DATE 28-11-78	datron ELECTRONICS LTD
DRAWN B.V.	TITLE ANALOGUE OUTPUT P.C.B ASSY.
CHECKED	
APPROVED	
DATE	DRAWING NUMBER 400308 — SHEET 4 OF 4

DESIGNATOR	DATRON PART No	DESCRIPTION	PRINCIPAL MANUFACTURER	MANUFACTURER'S PART No.	No. USED Per Assy.
R1	000123	12K 5% ¼W CARBON.	MULLARD	CR25	2
R2		NOT USED			—
R3	000332	3K3 5% ¼W CARBON.	MULLARD	CR25	3
R4		NOT USED			—
R5	000123	12K 5% ¼W. CARBON.	MULLARD	CR25	—
R6	000222	2K2 5% ¼W CARBON.	MULLARD	CR25	1
R7		NOT USED			—
R8		NOT USED			—
R9		NOT USED.			—
R10	000562	5K6 5% ¼W CARBON	MULLARD	CR25	1
R11	000103	10K 5% ¼W CARBON	MULLARD	CR25	4
R12	000105	1M 5% ¼W CARBON.	MULLARD	CR25	1
R13		NOT USED			—
R14	000103	10k 5% ¼W CARBON	MULLARD	CR25	—
R15		NOT USED			—
R16	000332	3k3 5% ¼W CARBON	MULLARD	CR25	—
R17		NOT USED			—
R18	000681	680R 5% ¼W CARBON	MULLARD	CR25	1
R19	000332	3k3 5% ¼W CARBON	MULLARD	CR25	—
R20	000103	10k 5% ¼W CARBON	MULLARD	CR25	—
R21	000103	10K 5% ¼W CARBON	MULLARD	CR25	—

NOTES.

SEE SHEET 3 FOR LATEST ISSUE

ISS.	A	1	2 c	3	4	5	6	7	8
E.C.O		Rel. To Prod	972/995	2481	1054	1085	1167	1199	1328
DATE	9 MAY 79	17 MAY 79	25 OCT 79	16 NOV 79	2 JAN 80	22.4.80	23.9.80	24.2.81	12.5.82
CHKD			MD	MD	MD	MD	MD	MD	MD

DATE 9 MAY 79
DRAWN W.G. SMITH
CHECKED
APPROVED
DATE 17 MAY 79

datron ELECTRONICS LTD

TITLE REAR INPUT ASSY. 1061/71

DRAWING NUMBER 400386 SHEET 3 OF 8.

J.W. 1164

DESIGNATOR	DATRON PART No.	DESCRIPTION	PRINCIPAL MANUFACTURER	MANUFACTURER'S PART No.	No. USED Per Assy.
C1	150022	2µ2F. 20% 35V. DIP. TANT.	UNION CARBIDE	K2R2E35	1
C2		NOT USED			—
C3		NOT USED			—
C4	150020	10µF 20% 25V. DIP. TANT.	UNION CARBIDE	K10E25	1
C5	102101	100pF 10% 500V. CER. DISC	ITT	CD10	1
C6	110013	100nF 20% 250V. POLYESTER	MULLARD	C280AEP100K	1
C7	150014	680nF 20% 35V DIP TANT	UNION CARBIDE	KR68E35	1

NOTES

SEE SHEET 3 FOR LATEST ISSUE

ISS									
E.C.O									
DATE									
CHKD									

DATE 23.9.80
DRAWN
CHECKED
APPROVED
DATE

datron ELECTRONICS LTD

TITLE REAR INPUT ASSY 1061/1071

DRAWING NUMBER 400386 SHEET 4 OF 8

J.W. 1164

DESIGNATOR	DATRON PART No.	DESCRIPTION	PRINCIPAL MANUFACTURER	MANUFACTURER'S PART No.	No. USED Per Assy.
D1	200001	75mA. 75V GP SL DIODE	FAIRCHILD	IN4148	5
D2		NOT USED			–
D3	200001	75mA. 75V GP SL DIODE	FAIRCHILD	IN4148	–
D4		NOT USED			–
D5	200001	75mA. 75v GP Si DIODE	FAIRCHILD	IN4148	–
D6	200001	75mA 75v GP Si DIODE	FAIRCHILD	IN4148	–
D7	200001	75mA 75v GP Si DIODE	FAIRCHILD	IN4148	–
Q1	240001	SL NPN TRANSISTOR	NATIONAL	BC184/TO18	2
Q2		NOT USED			–
Q3	250001	SL PNP TRANSISTOR	NATIONAL	BC214/TO18	1
Q4		NOT USED.			–
Q5		NOT USED			–
Q6	240001	Si NPN TRANSISTOR	NATIONAL	BC184/TO18	–
M1	280011	DUAL D FLIP-FLOP	MOTOROLA	MC14013 BCP	1
J1	604036	CON. PIN STRIP OF 10 HORIZ. TYPE	AMP	163740-8	2
J2, J3	605052	8WAY POLARISED SOCKET	MOLEX	(22-01-2085) 6471-8-1	2

NOTES.

SEE SHEET 3 FOR LATEST ISSUE

ISS											
E.C.O.											
DATE											
CHKD.											

DATE 9 MAY 79
DRAWN W.G.SMITH
CHECKED MSD
APPROVED
DATE 17 MAY 79

datron ELECTRONICS LTD

TITLE REAR INPUT ASSY.
1061/71

DRAWING NUMBER 400386 SHEET 5 OF 8

DESIGNATOR	DATRON PART No.	DESCRIPTION	PRINCIPAL MANUFACTURER	MANUFACTURER'S PART No.	No. USED Per Assy.
J4 & J6	604033	FLAT WAFER PIN (4 WAY GOLD)	MOLEX	22-27-2041/GOLD	3
J5	605051	4WAY POLARISED SOCKET	MOLEX	22-01-2045	1
	400379/4	WIRE/TERMINAL ASSY	HOLDEN CORDS		6
	400379/5	WIRE/TERMINAL ASSY	HOLDEN CORDS		4.
RL1	330018	RELAY 2P2W 7v HOLD-IN	P&B	SEE DRAWING	1
RL2	330019	RELAY 4P2W 7v HOLD-IN	P&B	SEE DRAWING	1
RL3 & RL4		NOT USED.			
	410106-5	COMPONENT P.C.B			1
	410132-4	RELAY P.C.B.			1
	450257-1	SOCKET PLATE			1
	450241-1	RELAY BRACKET			1
	540002	22SWG TINNED COPPER WIRE			A/R
	540008	7/·2 PTFE INS. WHITE WIRE			140mm

NOTES.

SEE SHEET 3 FOR LATEST ISSUE

ISS.											
E.C.O.											
DATE											
CHKD.											

DATE 9 MAY 79
DRAWN W.G.SMITH
CHECKED MSD
APPROVED
DATE 17 MAY 79

datron ELECTRONICS LTD

TITLE REAR INPUT ASSY
1061/71

DRAWING NUMBER 400386 SHEET 6 OF 8

AIR. 1364

DESIGNATOR	DATRON PART No.	DESCRIPTION	PRINCIPAL MANUFACTURER	MANUFACTURER'S PART No.	No. USED Per Assy.
	590001	SLEEVE. MAX CABLE Ø 3.0mm	HELLERMAN ELECTRIC	H15×20MM BLK HELSYN	17
	590004	SLEEVE — PTFE	HELLERMAN ELECTRIC	FE10	30mm.
J11	604008	7 WAY PLUG PANEL MTG	PYE CONNECTORS	M7P	1
	605009	7 WAY SOCKET	PYE CONNECTORS	M7S	1
	605057	CRIMP TERMINAL	MOLEX	4809-GL	2
	606001	LOCKING HOOD	PYE CONNECTORS	M HN	1
	606002	NUT	PYE CONNECTORS	M N	1
	606003	WASHER	PYE CONNECTORS	M LW	1
	605060	14 WAY DIL SOCKET	ASTRALUX OR JERMYN	ICN-246-54T OR A25-2023Y	1
	611004	SCREW M3×6MM STEEL POSI-PAN	G.K.N	ZINC PLATED	7.
	611007	SCREW M3×6MM STEEL POSI-CSK.	G.K.N	ZINC PLATED	7.
	611016	SCREW M3×8MM STEEL POSI-PAN	G.K.N.	ZINC PLATED.	4.
	612020	STAND-OFF NYLON M3×10 TRANSPILLAR.	W.K. ELECTRONICS.	TP1/6S/10/M3/I/I	5

NOTES.

SEE SHEET 3 FOR LATEST ISSUE

ISS											
ECO											
DATE											
CHKD											

DATE 9 MAY 79
DRAWN W.G.SMITH.
CHECKED MJD
APPROVED
DATE 17 MAY 79

datron ELECTRONICS LTD

TITLE REAR INPUT ASSY
1061/71

DRAWING NUMBER 400386

SHEET 7 OF 8

J.W. 1164

DESIGNATOR	DATRON PART No	DESCRIPTION	PRINCIPAL MANUFACTURER	MANUFACTURER'S PART No.	No. USED Per Assy.
	613005	WASHER M3 INT SHAKEPROOF ST	GKN DISTRIBUTORS	ZINC PLATED	13
	615001	NUT BBA FULL HEX STEEL		ZINC PLATED	2
	615002	NUT M3 FULL HEX STEEL		ZINC PLATED	2
	700069	DPDT SLIDE SWITCH	WAYCOM	S-5022 CD03-0+3/4" TRIGGER & STYLE 2 C P.C.B MOUNT CONTACTS	1

NOTES.

SEE SHEET 3 FOR LATEST ISSUE

ISS											
ECO											
DATE											
CHKD											

DATE 9 MAY 79
DRAWN W.G.SMITH
CHECKED MJD
APPROVED
DATE 17 MAY 79

datron ELECTRONICS LTD

TITLE REAR INPUT ASSY.
1061/71

DRAWING NUMBER 400386

SHEET 8 OF 8

J.W. 1164

DESIGNATOR	DATRON PART No.	DESCRIPTION	PRINCIPAL MANUFACTURER	MANUFACTURER'S PART No.	No. USED Per Assy.
R1	090054	8k2 ·25% 10ppm MF	ACI	SEE DRG	1
R2	011181	1k18 1% 1/8W 50ppm MF	HOLCO	H8C	1
R3	015900	590R 1% 1/8W 50ppm MF	HOLCO	H8C	1
R4	012940	294R 1% 1/8W 50ppm MF	HOLCO	H8C	2
R5	011470	147R 1% 1/8W 50ppm MF	HOLCO	H8C	1
R6	090054	16k ·25% 10ppm MF	ACI	SEE DRG	–
R7 *	000434	430k 5% 1/4W CARBON	MULLARD	CR25	1
R8	000394	390k 5% 1/4W CARBON	MULLARD	CR25	1
R9	000103	10k 5% 1/4W CARBON	MULLARD	CR25	5
R10	000155	1M5 5% 1/4W CARBON	MULLARD	CR25	2
R11	000105	1M 5% 1/4W CARBON	MULLARD	CR25	5
R12	000152	1k5 5% 1/4W CARBON	MULLARD	CR25	1
R13	000224	220k 5% 1/4W CARBON	MULLARD	CR25	1
R14	000333	33k 5% 1/4W CARBON	MULLARD	CR25	3
R15	000104	100k 5% 1/4W CARBON	MULLARD	CR25	6
R16	000685	6M8 5% 1/4W CARBON	MULLARD	CR25	1
R17	000332	3k3 5% 1/4W CARBON	MULLARD	CR25	5
R18	090053	100k ·25% 10ppm MF	ACI	SEE DRG	1
R19	090053	100k ·25% 10ppm MF	ACI	SEE DRG	–
R20	000274	270K CARBON (DO NOT SOLDER)	MULLARD	CR25	1
R21	000821	820R 5% 1/4W CARBON	MULLARD	CR25	1
R22	290026	RMS KIT	DATRON	SEE DRG	1
R23	000270	27R 5% 1/4W CARBON	MULLARD	CR25	1

NOTES. * NOT USED ON ASSEMBLIES FITTED INTO 1061's

SEE SHEET 2 FOR LATEST ISSUE

ISS.	22	22
E.C.O.	1730	1801
DATE	23.10.84	2.1.85
CHKD.		

DATE 17.8.79
DRAWN IL
CHECKED RLW
APPROVED
DATE

datron ELECTRONICS LTD

TITLE AC PCB ASSY

DRAWING NUMBER 400402

SHEET 2 OF 17

DESIGNATOR	DATRON PART No.	DESCRIPTION	PRINCIPAL MANUFACTURER	MANUFACTURER'S PART No.	No. USED Per Assy.
R24	000107	100M 10% 1/4W CARBON	ALLEN BRADLEY	CB10	3
R25	000331	330R 5% 1/4W CARBON	MULLARD	CR25	2
R26	000154	150k 5% 1/4W CARBON	MULLARD	CR25	2
R27	000334	330k 5% 1/4W CARBON	MULLARD	CR25	1
R28	290026	RMS KIT	DATRON	SEE DRG	–
R29	000221	220R 5% 1/4W CARBON	MULLARD	CR25	4
R30	000680	68R 5% 1/4W CARBON	MULLARD	CR25	3
R31	000561	560R 5% 1/4W CARBON	MULLARD	CR25	2
R32	000182	1k8 5% 1/4W CARBON	MULLARD	CR25	2
R33	000333	33k 5% 1/4W CARBON	MULLARD	CR25	–
R34	000103	10k 5% 1/4W CARBON	MULLARD	CR25	–
R35	063500	50R POT 3/8"SQ. CERMET	BECKMAN	72P	2
R36	049093	909K 1% 1/2W 100ppm CF	ALLEN BRADLEY	CC	1
R37	000222	2k2 5% 1/4W CARBON	MULLARD	CR25	3
R38	000124	120k 5% 1/4W CARBON	MULLARD	CR25	1
R39	000104	100k 5% 1/4W CARBON	MULLARD	CR25	–
R40	000103	10k 5% 1/4W CARBON	MULLARD	CR25	–
R41	000332	3k3 5% 1/4W CARBON	MULLARD	CR25	–
R42	000332	3k3 5% 1/4W CARBON	MULLARD	CR25	–
R43	000332	3k3 5% 1/4W CARBON	MULLARD	CR25	–
R44	000331	330R 5% 1/4W CARBON	MULLARD	CR25	–
R45	000680	68R 5% 1/4W CARBON	MULLARD	CR25	–
R46	000472	4k7 5% 1/4W CARBON	MULLARD	CR25	1

NOTES.

SEE SHEET 2 FOR LATEST ISSUE

ISS			
E.C.O.			
DATE			
CHKD			

DATE 17.8.79
DRAWN IL
CHECKED RLW
APPROVED
DATE

datron ELECTRONICS LTD

TITLE AC PCB ASSY

DRAWING NUMBER 400402

SHEET 3 OF 17

DESIGNATOR	DATRON PART No.	DESCRIPTION	PRINCIPAL MANUFACTURER	MANUFACTURER'S PART No.	No. USED Per Assy.
R47	090051	4k7 ·25% 10ppm MF	ACI	SEE DRG	1
R48	090053	8k975·25% 10ppm MF	ACI	SEE DRG	—
R49	000912	9k1 5% 1/4W CARBON	MULLARD	CR25	1
R50	063500	50R POT 3/8"SQ. CERMET	BECKMAN	72P	—
R51	000107	100M 10% 1/4W CARBON	ALLEN BRADLEY	CB10	—
R52	000122	1k2 5% 1/4W CARBON	MULLARD	CR25	1
R53	000333	33k 5% 1/4W CARBON	MULLARD	CR25	—
R54	000123	12k 5% 1/4W CARBON	MULLARD	CR25	1
R55	000681	680R 5% 1/4W CARBON	MULLARD	CR25	1
R56	000103	10k 5% 1/4W CARBON	MULLARD	CR25	—
R57	000105	1M 5% 1/4W CARBON	MULLARD	CR25	—
R58	000104	100k 5% 1/4W CARBON	MULLARD	CR25	—
R59	000120	12R 5% 1/4W CARBON	MULLARD	CR25	2
R60	000120	12R 5% 1/4W CARBON	MULLARD	CR25	—
R61	000222	2k2 5% 1/4W CARBON	MULLARD	CR25	—
R62	000332	3k3 5% 1/4W CARBON	MULLARD	CR25	—
R63	008060	680R 5% 1/5W CARBON	MULLARD	CR16	1
R64	000222	2k2 5% 1/4W CARBON	MULLARD	CR25	—
R65	000101	100R 5% 1/4W CARBON	MULLARD	CR25	4
R66	000221	220R 5% 1/4W CARBON	MULLARD	CR25	—
R67	000183	18k 5% 1/4W CARBON	MULLARD	CR25	1
R68	090053	18k ·25% 10ppm MF	ACI	SEE DRG	—
R69	090051	4k7 ·25% 10ppm MF	ACI	SEE DRG	—

NOTES.

SEE SHEET 2 FOR LATEST ISSUE

ISS.												
E.C.O.												
DATE												
CHKD												

DATE 17.8.79
DRAWN IL
CHECKED RIW
APPROVED
DATE

datron ELECTRONICS LTD

TITLE AC PCB ASSY

DRAWING NUMBER 400402 SHEET 4 OF 17

DESIGNATOR	DATRON PART No.	DESCRIPTION	PRINCIPAL MANUFACTURER	MANUFACTURER'S PART No.	No. USED Per Assy.
R70	000272	2k7 5% 1/4W CARBON	MULLARD	CR25	2
R71	000272	2k7 5% 1/4W CARBON	MULLARD	CR25	—
R72	000330	33R 5% 1/4W CARBON	MULLARD	CR25	1
R73	000105	1M 5% 1/4W CARBON	MULLARD	CR25	—
R74	000824	820k 5% 1/4W CARBON	MULLARD	CR25	1
R75	063504	500k POT 3/8"SQ CERMET	BECKMAN	72P	2
R76	090067	62k6 ·25% 10ppm MF	ACI	SEE DRG	1
R77	000104	100k 5% 1/4W CARBON	MULLARD	CR25	—
R78	000225	2M2 5% 1/4W CARBON	MULLARD	CR25	2
R79	011103	110k 1% 1/8W MF	HOLCO	H8C	1
R80	000561	560R 5% 1/4W CARBON	MULLARD	CR25	—
R81	000101	100R 5% 1/4W CARBON	MULLARD	CR25	—
R82	000101	100R 5% 1/4W CARBON	MULLARD	CR25	—
R83	000104	100k 5% 1/4W CARBON	MULLARD	CR25	—
R84	000184	180k 5% 1/4W CARBON	MULLARD	CR25	3
R85	000184	180k 5% 1/4W CARBON	MULLARD	CR25	—
R86	000103	10k 5% 1/4W CARBON	MULLARD	CR25	—
R87	000153	15k 5% 1/4W CARBON	MULLARD	CR25	3
R88	000680	68R 5% 1/4W CARBON	MULLARD	CR25	—
R89	000221	220R 5% 1/4W CARBON	MULLARD	CR25	—
R90	063204	200k POT 3/8"SQ. CERMET	BECKMAN	72P	1
R91	000105	1M 5% 1/4W CARBON	MULLARD	CR25	—
R92	000105	1M 5% 1/4W CARBON	MULLARD	CR25	—

NOTES.

SEE SHEET 2 FOR LATEST ISSUE

ISS												
E.C.O.												
DATE												
CHKD.												

DATE 17.8.79
DRAWN IL
CHECKED RIW
APPROVED
DATE

datron ELECTRONICS LTD

TITLE AC PCB ASSY

DRAWING NUMBER 400402 SHEET 5 OF 17

DESIGNATOR	DATRON PART No.	DESCRIPTION	PRINCIPAL MANUFACTURER	MANUFACTURER'S PART No.	No. USED Per Assy.
R93	000225	2M2 5% 1/4W CARBON	MULLARD	CR25	—
R94	000564	560K 5% 1/4W CARBON	MULLARD	CR25	2
R95	090052	9k ·25% 10ppm MF	ACI	SEE DRG	1
R96	090052	1k ·25% 10ppm MF	ACI	SEE DRG	—
R97	000101	100R 5% 1/4W CARBON	MULLARD	CR25	—
R98	000471	470R 5% 1/4W CARBON	MULLARD	CR25	1
R99	000182	1k8 5% 1/4W CARBON	MULLARD	CR25	—
R100	000184	180k 5% 1/4W CARBON	MULLARD	CR25	—
R101	012940	294R 1% 1/8W MF	HOLCO	H8C	—
R102	090067	62k6 ·25% 10ppm MF	ACI	SEE DRG	—
R103	000221	220R 5% 1/4W CARBON	MULLARD	CR25	—
R104	000154	150K 5% 1/4W CARBON	MULLARD	CR25	—
R105	000564	560K 5% 1/4W CARBON	MULLARD	CR25	—
R106	011001	1k00 1% 1/8W 50ppm MF	HOLCO	H8C	3
R107	011823	182k 1% 1/8W 50ppm MF	HOLCO	H8C	1
R108	042215	22M1 1% 1/2W 100ppm MF	ALLEN BRADLEY	CC	2
R109	090066	1k ·25% 10ppm MF	ACI	SEE DRG.	1
R110	090066	10k1 ·25% 10ppm MF	ACI	SEE DRG	—
R111	090066	111k ·25% 10ppm MF	ACI	SEE DRG	—
R112	063504	500k POT 3/8"SQ CERMET	BECKMAN	72P	—
R113	042215	22M1 1% 1/2W 100ppm MF	ALLEN BRADLEY	CC	—
R114	090066	1M ·25% 10ppm MF	ACI	SEE DRG	—
R115	000153	15k 5% 1/4W CARBON	MULLARD	CR25	—

NOTES.

SEE SHEET 2 FOR LATEST ISSUE

ISS.												
E.C.O.												
DATE												
CHKD.												

DATE 17.8.79
DRAWN IL
CHECKED RLW
APPROVED
DATE

datron ELECTRONICS LTD

TITLE AC PCB ASSY

DRAWING NUMBER 400402 SHEET 6 OF 17

DESIGNATOR	DATRON PART No.	DESCRIPTION	PRINCIPAL MANUFACTURER	MANUFACTURER'S PART No.	No. USED Per Assy.
R116	000336	33M 10% 1/4W CARBON	ALLEN BRADLEY	CB10	1
R117	000102	1k 5% 1/4W CARBON	MULLARD	CR25	2
R118	000155	1M5 5% 1/4W CARBON	MULLARD	CR25	—
R119	000107	100M 10% 1/4W CARBON	ALLEN BRADLEY	CB10	—
R120	000102	1k 5% 1/4W CARBON	MULLARD	CR25	—
R121	063105	1M POT 3/8"SQ CERMET	BECKMAN	72 P	1
R122	000104	100k 5% 1/4W CARBON	MULLARD	CR25	—
R123	090066	277k ·25% 10ppm MF	ACI	SEE DRG	—
R124	090066	277k ·25% 10ppm MF	ACI	SEE DRG	—
R125	090066	277k ·25% 10ppm MF	ACI	SEE DRG	—
R126	090066	277k ·25% 10ppm MF	ACI	SEE DRG	—
R127		NOT USED			—
R128	000476	47M 10% 1/4W CARBON	ALLEN BRADLEY	CB10	1
R129	008059	820R 5% 1/5W CARBON	MULLARD	CR16	1
R130		NOT USED			—
R131		" "			—
R132		" "			—
R133	011001	1k00 1% 1/8W 50ppm M/F	HOLCO	H8C	—
R134	011001	1k00 1% 1/8W 50ppm M/F	HOLCO	H8C	—
R135		NOT USED			—
R136	000153	15k 5% 1/4W CARBON	MULLARD	CR25	—

NOTES.

SEE SHEET 2 FOR LATEST ISSUE

ISS												
E.C.O												
DATE												
CHKD												

DATE 17.8.79
DRAWN IL
CHECKED RLW
APPROVED
DATE

datron ELECTRONICS LTD

TITLE AC PCB ASSY

DRAWING NUMBER 400402 SHEET 7 OF 17

DESIGNATOR	DATRON PART No.	DESCRIPTION	PRINCIPAL MANUFACTURER	MANUFACTURER'S PART No.	No. USED Per Assy.
C1	120018	1µ5F 10% 63v POLYCARB	ASHCROFT	A2B152.1B	1
C2	120030	820nF 10% 63v POLYCARB	ASHCROFT	SEE DRG.	1
C3	120021	470nF 10% 63v POLYCARB	ASHCROFT	A2B4711B	2
C4	120024	6µ8F 10% 63v POLYCARB	ASHCROFT	A2B6821B	1
C5	120020	220nF 10% 63v POLYCARB	ASHCROFT	A2B2211B	1
C6	150012	100nF 20% 35v DIP TANT	UNION CARBIDE	KR10E35	1
C7	120021	470nF 10% 63v POLYCARB	ASHCROFT	A2B4711B	—
C8	102680	68pF 5% 500v CER DISC	ITT	CD10	1
C9	102101	100pF 10% 500v CER DISC	ITT	CD10	2
C10	102471	470pF 10% 500v CER DISC	ITT	CD10	1
C11	150020	10µF 20% 25v DIP TANT	UNION CARBIDE	K10E25	8
C12	110013	100nF 20% 250v POLYESTER	MULLARD	C280AEP100k	5
C13	150020	10µF 20% 25v DIP TANT	UNION CARBIDE	K10E25	—
C14	150020	10µF 20% 25v DIP TANT	UNION CARBIDE	K10E25	—
C15	101103	10nF 25% 250v CER DISC	ITT	CD10	7
C16	150003	47µF 20% 6V3 DIP TANT	UNION CARBIDE	K47E6V3	1
C17	110013	100nF 20% 250v POLYESTER	MULLARD	C280AEP100k	—
C18	102108	1pF ±·5pF 500v CER DISC	ITT	CD06	1
C19	102470	47pF 5% 500v CER DISC	ITT	CD10	2
C20	150020	10µF 20% 25v DIP TANT	UNION CARBIDE	K10E25	—
C21	110013	100nF 20% 250v POLYESTER	MULLARD	C280AEP100k	—
C22	102100	10pF 5% 500v CER DISC	ITT	CD10	3
C23	102100	10pF 5% 500v CER DISC	ITT	CD10	—

NOTES.

SEE SHEET 2 FOR LATEST ISSUE

ISS												
E.C.O												
DATE												
CHKD												

DATE 17.8.79
DRAWN IL
CHECKED RZW
APPROVED
DATE

datron ELECTRONICS LTD

TITLE AC PCB ASSY

DRAWING NUMBER 400402 SHEET 8 OF 17

DESIGNATOR	DATRON PART No.	DESCRIPTION	PRINCIPAL MANUFACTURER	MANUFACTURER'S PART No.	No. USED Per Assy.
C24	102478	4p7F ±·5pF 500v CER DISC	ITT	CD08	2
C25	102478	4p7F ±·5pF 500v CER DISC	ITT	CD08	—
C26	150020	10µF 20% 25v DIP TANT	UNION CARBIDE	K10E25	—
C27	150020	10µF 20% 25v DIP TANT	UNION CARBIDE	K10E25	—
C28	150016	1µF 20% 35v DIP TANT	UNION CARBIDE	K1R0E35	1
C29	130071	150pF 1% 160v POLYSTYRENE	SUFLEX	HSQ150/1 – 7/160	2
C30	130013	18pF ±1pF 160v POLYSTYRENE	SUFLEX	HS18/1 – 7/160	1
C31	110013	100nF 20% 250v POLYESTER	MULLARD	C280AEP100k	—
C32	110035	220nF 20% 63V POLYESTER	WIMA	MKS2MIN	2
C33	110035	220nF 20% 63v POLYESTER	WIMA	MKS2MIN	—
C34	102470	47pF 5% 500V CER DISC	ITT	CD10	—
C35	120022	1nSF 20% 100v POLYCARB	WIMA	FKC2MIN	2
C36	120022	1nSF 20% 100v POLYCARB	WIMA	FKC2MIN	—
C37	102101	100pF 10% 500v CER DISC	ITT	CD10	—
C38	102100	10pF 5% 500v CER DISC	ITT	CD10	—
C39	102331	330pF 10% 500v CER DISC	ITT	CD10	1
C40	150020	10µF 20% 25v DIP TANT	UNION CARBIDE	K10E25	—
C41	101103	10nF 25% 250v CER DISC	ITT	CD10	—
C42	130072	9p1F ±·5pF 160v POLYSTYRENE	SUFLEX	HS 9·1/·5 – 7/160	1
C43	130071	150pF 1% 160v POLYSTYRENE	SUFLEX	HSQ150/1 – 7/160	—
C44	150023	33µF 20% 25v DIP TANT	UNION CARBIDE	K33E25	1
C45	102150	15pF 5% 500v CER DISC	ITT	CD10	1
C46	102120	12pF 5% 500v CER DISC	ITT	CD10	1

NOTES.

SEE SHEET 2 FOR LATEST ISSUE

ISS.												
E.C.O.												
DATE												
CHKD.												

DATE 17.8.79
DRAWN IL
CHECKED RZW
APPROVED
DATE

datron ELECTRONICS LTD

TITLE AC PCB ASSY

DRAWING NUMBER 400402 SHEET 9 OF 17

DESIGNATOR	DATRON PART No.	DESCRIPTION	PRINCIPAL MANUFACTURER	MANUFACTURER'S PART No.	No. USED Per Assy.
C47	101103	10nF 25% 250v CER DISC	ITT	CD10	—
C48	140035	10nF 1% 125v SILV. MICA	ITT	454/274	1
C49	140034	1nF 1% 300v GLASS	ELECTROSIL	CYFM15	1
C50	110013	100nF 20% 250v POLYESTER	MULLARD	C280AE P100k	—
C51	140033	91pF 1% 500v GLASS	ELECTROSIL	CYFM10	1
C52	110026	6n8F 20% 100v POLYESTER	WIMA	FKS2 MIN	1
C53	101103	10nF 25% 250v CER DISC	ITT	CD10	—
C54	101103	10nF 25% 250v CER DISC	ITT	CD10	—
C55	140039	15pF 5% 500v GLASS	ELECTROSIL	CYFM10	3
C56	150020	10µF 20% 25v DIP TANT	UNION CARBIDE	K10E25	—
C57	120001	220nF 10% 1kV POLYCARB	SUFLEX	SN1380	1
C58	140031	13pF 5% 500v GLASS	ELECTROSIL	CYFM10	1
C59	140039	15pF 5% 500v GLASS	ELECTROSIL	CYFM10	—
C60	140039	15pF 5% 500v GLASS	ELECTROSIL	CYFM10	—
C61	140008	10pF 1kV TRIMMER	JACKSON	TETFER VPC	1
C62	140036	25pF 1kV TRIMMER	JACKSON	TETFER VPC 5646	2
C63	140036	25pF 1kV TRIMMER	JACKSON	TETFER VPC 5646	—
C64	102228	2p2F ±·5pF 500v CER DISC	ITT	CD08	1
C65		NOT USED			—
C66	102220	22pF 5% 500v CER DISC	ITT	CD10	1
C67		NOT USED			—
C68	101103	10nF 25% 250v CER DISC	ITT	CD10	—
C69	101103	10nF 25% 250v CER DISC	ITT	CD10	—

NOTES.

SEE SHEET 2 FOR LATEST ISSUE

ISS.												
E.C.O.												
DATE												
CHKD												

DATE 17.8.79
DRAWN IL
CHECKED RLW
APPROVED
DATE

datron ELECTRONICS LTD

TITLE AC PCB ASSY

DRAWING NUMBER 400402

SHEET 10 OF 17

DESIGNATOR	DATRON PART No.	DESCRIPTION	PRINCIPAL MANUFACTURER	MANUFACTURER'S PART No.	No. USED Per Assy.
C70	102330	33pF 5% 500v CER DISC	ITT	CD10	1
C71		NOT USED			—
C72		NOT USED			—
C73		NOT USED			—
C74	102332	3n3F 20% 500V CER DISC	ITT	CD10	1
C75	102102	1nF 10% 500V CER DISC	ITT	CD10	2
C76	102102	1nF 10% 500V CER DISC	ITT	CD10	—
C77	100828	8p2F ±·25pF 100V CER DISC	MULLARD	2222 683	1

NOTES.

SEE SHEET 2 FOR LATEST ISSUE

ISS												
E.C.O												
DATE												
CHKD												

DATE
DRAWN
CHECKED
APPROVED
DATE

datron ELECTRONICS LTD

TITLE AC PCB. ASSY.

DRAWING NUMBER 400402

SHEET 11 OF 17

DESIGNATOR	DATRON PART No.	DESCRIPTION	PRINCIPAL MANUFACTURER	MANUFACTURER'S PART No.	No. USED Per Assy.
D1	220010	Si HOT CARRIER DIODE	HP	HSCH1001/IN6263	4
D2	200008	200mA 125V LL Si DIODE	FAIRCHILD	IN458A	5
D3	200008	200mA 125V LL Si DIODE	FAIRCHILD	IN458A	–
D4	200008	200mA 125V LL Si DIODE	FAIRCHILD	IN458A	–
D5	210100	10V 400mW ZENER	MULLARD	BZY88C10	2
D6	200008	200mA 125V LL Si DIODE	FAIRCHILD	IN458A	–
D7	210100	10V 400mW ZENER	MULLARD	BZY88C10	–
D8	220010	Si HOT CARRIER DIODE	HP	HSCH1001/IN6263	–
D9	220010	Si HOT CARRIER DIODE	HP	HSCH1001/IN6263	–
D10		NOT USED			–
D11	220021	QUAD 29pF VARICAP DIODE	THOMPSON-CSF	BB109G4	SET OF 4
D12	200008	200mA 125V LL Si DIODE	FAIRCHILD	IN458A	–
D13	220010	Si HOT CARRIER DIODE	HP	HSCH1001/IN6263	–
D14	220020	FET DIODE 100pA I_R	TELEDYNE	PAD100	3
D15	220020	FET DIODE 100pA I_R	TELEDYNE	PAD100	–
D16	200001	75mA 75V GP Si DIODE	FAIRCHILD	IN4148	1
D17	220020	FET DIODE 100pA I_R	TELEDYNE	PAD100	–

NOTES.

SEE SHEET 2 FOR LATEST ISSUE

ISS.												
E.C.O.												
DATE												
CHKD												

DATE 17.8.79 | datron ELECTRONICS LTD
DRAWN IL | TITLE AC PCB ASSY
CHECKED RJW
APPROVED
DATE | DRAWING NUMBER 400402 | SHEET 12 OF 17

DESIGNATOR	DATRON PART No.	DESCRIPTION	PRINCIPAL MANUFACTURER	MANUFACTURER'S PART No.	No. USED Per Assy.
Q1	230002	N-CHAN JFET	TELEDYNE	U1994JF	5
Q2	230002	N-CHAN JFET	TELEDYNE	U1994JF	–
Q3	230027	N-CHAN JFET	TELEDYNE	U3114JF	1
Q4	240013	Si NPN TRANSISTOR	NATIONAL	BC184C/TO18	4
Q5	240006	Si NPN TRANSISTOR	NATIONAL	2N3904/TO18	7
Q6	250004	Si PNP TRANSISTOR	NATIONAL	2N3906/TO18	7
Q7	240013	Si NPN TRANSISTOR	NATIONAL	BC184C/TO18	–
Q8	250008	Si PNP TRANSISTOR	NATIONAL	BC214C/TO18	6
Q9	230001	N-CHAN CURRENT LIM	SILICONIX	E506	1
Q10	250008	Si PNP TRANSISTOR	NATIONAL	BC214C/TO18	–
Q11	250004	Si PNP TRANSISTOR	NATIONAL	2N3906/TO18	–
Q12	240006	Si NPN TRANSISTOR	NATIONAL	2N3904/TO18	–
Q13	250008	Si PNP TRANSISTOR	NATIONAL	BC214C/TO18	–
Q14	240013	Si NPN TRANSISTOR	NATIONAL	BC184C/TO18	–
Q15	240006	Si NPN TRANSISTOR	NATIONAL	2N3904/TO18	–
Q16	250004	Si PNP TRANSISTOR	NATIONAL	2N3906/TO18	–
Q17	240006	Si NPN TRANSISTOR	NATIONAL	2N3904/TO18	–
Q18	250004	Si PNP TRANSISTOR	NATIONAL	2N3906/TO18	–
Q19	230035	N-CHAN JFET	TELEDYNE	U1897JF	1
Q20	250008	Si PNP TRANSISTOR	NATIONAL	BC214C/TO18	–
Q21	250008	Si PNP TRANSISTOR	NATIONAL	BC214C/TO18	–
Q22	250004	Si PNP TRANSISTOR	NATIONAL	2N3906/TO18	–
Q23	250004	Si PNP TRANSISTOR	NATIONAL	2N3906/TO18	–

NOTES.

SEE SHEET 2 FOR LATEST ISSUE

ISS.												
E.C.O.												
DATE												
CHKD.												

DATE 17.8.79 | datron ELECTRONICS LTD
DRAWN IL | TITLE AC PCB ASSY
CHECKED RJW
APPROVED
DATE | DRAWING NUMBER 400402 | SHEET 13 OF 17

DESIGNATOR	DATRON PART No.	DESCRIPTION	PRINCIPAL MANUFACTURER	MANUFACTURER'S PART No.	No. USED Per Assy.
Q24	240006	Si NPN TRANSISTOR	NATIONAL	2N3904 / TO18	—
Q25	250004	Si PNP TRANSISTOR	NATIONAL	2N3906 / TO18	—
Q26	240006	Si NPN TRANSISTOR	NATIONAL	2N3904 / TO18	—
Q27	250008	Si PNP TRANSISTOR	NATIONAL	BC214C / TO18	—
Q28	240013	Si NPN TRANSISTOR	NATIONAL	BC184C / TO18	—
Q29	240006	Si NPN TRANSISTOR	NATIONAL	2N3904 / TO18	—
Q30	230003	N-CHAN JFET	TELEDYNE	U1899 JF	1
Q31	230002	N-CHAN JFET	TELEDYNE	U1994 JF	—
Q32	230031	N-CHAN DUAL JFET	TELEDYNE	SU2656M	2
Q33	240019	Si NPN DUAL TRANSISTOR	PMI	MAT01H	1
Q34	230031	N-CHAN DUAL JFET	TELEDYNE	SU2656M	—
Q35	230002	N-CHAN JFET	TELEDYNE	U1994 JF	—
Q36	230002	N-CHAN JFET	TELEDYNE	U1994 JF	—
Q37	230074	P-CHAN JFET	SILICONIX	J271	1

NOTES.

SEE SHEET 2 FOR LATEST ISSUE

ISS												
E.C.O.												
DATE												
CHKD												

DATE 17.8.79
DRAWN IL
CHECKED RJW
APPROVED
DATE

datron ELECTRONICS LTD

TITLE AC PCB ASSY

DRAWING NUMBER 400402

SHEET 14 OF 17

DESIGNATOR	DATRON PART No.	DESCRIPTION	PRINCIPAL MANUFACTURER	MANUFACTURER'S PART No.	No. USED Per Assy.
M1	260027	714 OP AMP	FAIRCHILD	μA714HC	5
M2	260027	714 OP AMP	FAIRCHILD	μA714HC	—
M3	280015	QUAD D-TYPE LATCH	MOTOROLA	MC14076BCP	2
M4	280015	QUAD D-TYPE LATCH	MOTOROLA	MC14076BCP	—
M5	280011	DUAL D FLIP-FLOP	MOTOROLA	MC14013BCP	1
M6	290026	RMS KIT	DATRON	SEE DRG	—
M7	290077	7x DARLINGTON DRIVER	SPRAGUE / EXAR	ULN2004A / XR2204CP	1
M8	260027	714 OP AMP	FAIRCHILD	μA714HC	—
M9	260027	714 OP AMP	FAIRCHILD	μA714HC	—
M10	290066	FREQ. SENSITIVE SWITCH	CONSUMER MICROCIRCUITS	FX301L	1
M11	260027	714 OP AMP	FAIRCHILD	μA714HC	—
RL1	330012-2	RELAY REED 1A GUARDED	HAMLIN	HE721A5134	4
RL2	330018	RELAY 2P2W 7v HOLD-IN	P & B	SEE DRAWING	2
RL3	330018	RELAY 2P2W 7v HOLD-IN	P & B	SEE DRAWING	—
RL4	330012-2	RELAY REED 1A GUARDED	HAMLIN	HE721A5134	—
RL5	330012-2	RELAY REED 1A GUARDED	HAMLIN	HE721A5134	—
RL6	330012-2	RELAY REED 1A GUARDED	HAMLIN	HE721A5134	—

NOTES.

SEE SHEET 2 FOR LATEST ISSUE

ISS.												
E.C.O.												
DATE												
CHKD												

DATE 17.8.79
DRAWN IL
CHECKED RJW
APPROVED
DATE

datron ELECTRONICS LTD

TITLE AC PCB ASSY

DRAWING NUMBER 400402

SHEET 15 OF 17

DESIGNATOR	DATRON PART No.	DESCRIPTION	PRINCIPAL MANUFACTURER	MANUFACTURER'S PART No.	No. USED Per Assy.
TP's, TL's.	540002	22 SWG. TINNED COPPER WIRE			A/R
	590004	SLEEVE — PTFE	HELLERMANN ELECTRIC	FE10	A/R
J1	571095\C	16 WAY AP/3M RIBBON CABLE	DATRON		1
J2	605052	8 WAY POLARISED SOCKET	MOLEX	(22-01-2085) 6471-8-1	1
	590055	SLEEVE Ø1·0 SIL. RUBBER	HELLERMANN ELECTRIC	H15 CONT. BLACK	50mm
	400379/1	WIRE/TERMINAL ASSY.			1
	410136-4	PCB			1
	450249-2	GUARD SHIELD			1
	459112-2	RELAY BRACKET			2
	605056	CRIMP TERMINAL	MOLEX	4809-TL	1
	512999	7/0·2 PTFE INSULATED (WHITE) WIRE			A/R
	590001	SLEEVE MAX. CABLE Ø3·0	HELLERMAN ELECTRIC	H15x20mm BLACK HELSYN	7
	590002	SLEEVE MAX. CABLE Ø6·0	HELLERMAN ELECTRIC	H30x25mm BLACK HELSYN	1
	602001	FSV TERMINAL	MOLEX	02-04-1875	2
	602004	BREAKAWAY TERMINAL STRIP	MOLEX	05-30-0001	16
	605060	14 PIN DIL SOCKET	ASTRALUX	ICL 143-S3T	1
	605061	16 PIN DIL SOCKET	ASTRALUX	ICL 163-S6T	3
	605057	CRIMP TERMINAL	MOLEX	4809-GL	1
	611007	SCREW M3x6mm STEEL POZI-	CSK ZN/PLATED GKN		3
	611016	SCREW M3x8mm STEEL POZI-	PAN ZN/PLATED GKN		5

NOTES.

SEE SHEET 2 FOR LATEST ISSUE

ISS.												
E.C.O												
DATE												
CHKD.												

DATE 17.8.79
DRAWN IL
CHECKED RLW
APPROVED
DATE

datron ELECTRONICS LTD

TITLE AC PCB ASSY.

DRAWING NUMBER 400402 SHEET 16 OF 17

DESIGNATOR	DATRON PART No.	DESCRIPTION	PRINCIPAL MANUFACTURER	MANUFACTURER'S PART No.	No. USED Per Assy.
	612021	STANDOFF M3x16 HEX STEEL	HARWIN	R6077-M3	3
	613005	WASHER M3 INT/SHAKEPROOF ST.	GKN DISTRIBUTORS	ZINC PLATED	5
	613014	WASHER M2·5 INT/SHAKEPROOF ST.	GKN DISTRIBUTORS	ZINC PLATED	2
	615002	NUT M3 FULL HEX STEEL		ZINC PLATED	2
	615005	NUT 3-48 UNC FULL HEX.ST.		ZINC PLATED	2
	617010	NYLATCH PLUNGER HN3P	ORDER FROM C.J.FOX & SONS	HN3P-32-4-1	4
	617011	NYLATCH GROMMET HN3G	ORDER FROM C.J.FOX & SONS	HN3G-32-1	4
	620003	SOLDER PCB TERMINAL LUG	HARWIN	H2105A	2
	620005	CLOVERLEAF PTFE TERMINAL	SEALECTRO	FTE 15 P20	15
	630107	BRASS STRIP ·375mm THK x15·5	RIGHTON	½ HARD	130mm
	620007	TEST POINT TERMINAL	MICROVAR	C30	6

NOTES.

SEE SHEET 2 FOR LATEST ISSUE

ISS.												
E.C.O.												
DATE												
CHKD.												

DATE 17.8.79
DRAWN IL
CHECKED RLW
APPROVED
DATE

datron ELECTRONICS LTD

TITLE AC PCB ASSY.

DRAWING NUMBER 400402 SHEET 17 OF 17

DESIGNATOR	DATRON PART No.	DESCRIPTION	PRINCIPAL MANUFACTURER	MANUFACTURER'S PART No.	No. USED Per Assy.
R1	000104	100k 5% ¼W CARBON	MULLARD	CR25	3
R2	000103	10k 5% ¼W CARBON	MULLARD	CR25	1
R3	000104	100k 5% ¼W CARBON	MULLARD	CR25	–
R4	000104	100k 5% ¼W CARBON	MULLARD	CR25	–
R5	000102	1K 5% ¼W CARBON	MULLARD	CR25	2
R6	000561	560R 5% ¼W CARBON	MULLARD	CR25	1
R7	000102	1k 5% ¼W CARBON	MULLARD	CR25	–
R8	000332	3K3 5% ¼W CARBON	MULLARD	CR25	1
AN1	090017	100k × 7 2% NETWORK	BECKMAN	764-1-R100k	1
C1	150015	10μF 20% 35v DIP. TANT.	UNION CARBIDE	K10E35	3
C2	104025	100nF +80% −20% 50V CER DISC	SIEMENS	B37449	9
C3	150015	10μF 20% 35v DIP. TANT.	UNION CARBIDE	K10E35	–
C4	150015	10μF 20% 35v DIP. TANT.	UNION CARBIDE	K10E35	–
C5	150016	1μF 20% 35V DIP. TANT.	UNION CARBIDE	K1R0E35	1
C6	150012	100nF 20% 35v DIP. TANT	UNION CARBIDE	KR10E35	1
C7	104025	100nF +80% −20% 50V CER DISC	SIEMENS	B37449	–
C8	101103	10nF 25% 250V CER. DISC	ITT	CD10	1
C9	102681	680pF 10% 500v CER DISC	ITT	CD10	1
C10	102101	100pF 10% 500V CER DISC	ITT	CD10	1
C11	104025	100nF +80% −20% 50V CER DISC	SIEMENS	B37449	–
C12	104025	100nF +80% −20% 50V CER DISC	SIEMENS	B37449	–
C13	104025	100nF +80% −20% 50V CER DISC	SIEMENS	B37449	–

NOTES.

SEE SHEET 2 FOR LATEST ISSUE

ISS.	10
E.C.O	1681
DATE	20-7-84
CHKD	

DATE 19.9.80
DRAWN
CHECKED
APPROVED
DATE

datron ELECTRONICS LTD

TITLE 1061/1065/1071/1081 IEEE PCB. ASSY.

DRAWING NUMBER 400427 SHEET 2 OF 5

DESIGNATOR	DATRON PART No.	DESCRIPTION	PRINCIPAL MANUFACTURER	MANUFACTURER'S PART No.	No. USED Per Assy.
C14	104025	100nF +80% −20% 50V CER DISC	SIEMENS	B37449	–
C15	104025	100nF +80% −20% 50V CER DISC	SIEMENS	B37449	–
C16	104025	100nF +80% −20% 50V CER DISC	SIEMENS	B37449	–
C17	104025	100nF +80% −20% 50V CER DISC	SIEMENS	B37449	–
M1	280086	BI-DIRECTIONAL BUS TRANSC'R	MOTOROLA	MC3447P	2
M2	280086	BI-DIRECTIONAL BUS TRANSC'R	MOTOROLA	MC3447P	–

NOTES.

SEE SHEET 2 FOR LATEST ISSUE

ISS.	
E.C.O.	
DATE	
CHKD.	

DATE 28.2.84
DRAWN
CHECKED
APPROVED
DATE

datron ELECTRONICS LTD

TITLE 1061/1065/1071/1081 IEEE. PCB. ASSY.

DRAWING NUMBER 400427 SHEET 3 OF 5

DESIGNATOR	DATRON PART No	DESCRIPTION	PRINCIPAL MANUFACTURER	MANUFACTURER'S PART No.	No USED Per Assy.
M3		FITTED AT FINAL ASSY.			—
M4		NOT USED			—
M5		NOT USED			—
M6	280024	TRI-STATE HEX. BUFFER	MOTOROLA	MC14503 BCP	1
M7		NOT USED			—
M8	270050	HEX. INVERTER LS	NATIONAL	DM74 LS04N	1
M9	280064	GPIA	MOTOROLA	MC68488P	1
M10	280068	DUAL PREC. M'STABLE M'VIBR.	MOTOROLA	MC14538BCP	1
M11	270055	DUAL 4 I/P NAND LS	NATIONAL	DM74 LS20N	2
M12	270055	DUAL 4 I/P NAND LS	NATIONAL	DM74 LS20N	—
M13	270051	DUAL 4 I/P AND LS	NATIONAL	DM74LS21N	1
J1	605102	24 WAY DIL. SOCKET GOLD	CA	CA-24-S 105D	1
J2	605002	16WAY DIL. LOW PROFILE SKT.	JERMYN OR ANTIFERENCE	A23-2001/Y OR ICN-63-S3	1
J3	573120/C	24 WAY AP/3M CABLE ASSY	DATRON		1
J4	605051	4 WAY POLARISED SOCKET	MOLEX	(22-01-2045) 6471-4-1	1
	400379/1	WIRE/TERMINAL ASSY			2
	410165-4A	PCB			1
	540002	22 SWG BTC WIRE			A/R
	590004	SLEEVE - PTFE	HELLERMANN ELECTRIC	FE10	A/R
	605060	14 WAY DIL. SOCKET	ASTRALUX OR JERMYN	ICL-143-S3T	4

NOTES.

SEE SHEET 2 FOR LATEST ISSUE

ISS												
ECO												
DATE												
CHKD												

DATE
DRAWN
CHECKED
APPROVED
DATE

datron ELECTRONICS LTD

TITLE 1061/1065/1071/1081 IEEE PCB. ASSY.

DRAWING NUMBER 400427 SHEET 4 OF 5

DESIGNATOR	DATRON PART No.	DESCRIPTION	PRINCIPAL MANUFACTURER	MANUFACTURER'S PART No.	No USED Per Assy.
	605061	16WAY DIL. SOCKET	ASTRALUX OR JERMYN	ICL-163-S6T	2
	605050	40 PIN DIL. LOW PROF. SKT	AUGAT	340-AG39D	1
	605064	24 PIN DIL SOCKET	AUGAT	324-AG39D	3
	605056	CRIMP TERMINAL	MOLEX	4809-TL	2
	606005	CLIP FOR 605002	ANTIFERENCE	RC-74	1
	620007	TEST POINT TERMINAL	MICROVAR	C30	5
	900004	SILICONE RUBBER COMPOUND	RS	555-588	A/R

NOTES.

SEE SHEET 2 FOR LATEST ISSUE

ISS												
ECO												
DATE												
CHKD												

DATE
DRAWN
CHECKED
APPROVED
DATE

datron ELECTRONICS LTD

TITLE 1061/1065/1071/1081 IEEE. PCB. ASSY.

DRAWING NUMBER 400427 SHEET 5 OF 5

440082/440083/440084

DESIGNATOR	DATRON PART No.	DESCRIPTION	PRINCIPAL MANUFACTURER	MANUFACTURER'S PART No.	No. USED Per Assy.
	400427	IEEE 488 OPTION P.C.B ASSY	DATRON		1
	400429	SOCKET/CABLE ASSY.	DATRON		1
	400346	ADDRESS SWITCH P.C.B ASSY	DATRON		1
	SEE TABLE	EXTERNAL TRIGGER ASSY	DATRON		1
	450169-3	STUD MOUNT STANDOFF.			2
	450225-2	IEEE ADAPTOR PLATE			SEE TABLE
	611016	SCREW M3 × 8 POSI PAN HD			2
	613005	WASHER M3 INTERNAL SH'K PROOF			2
	613020	WASHER M4 FLAT-STEEL			2
	613021	WASHER M4 INTERNAL SH'K PROOF			2
	615011	NUT M4 FULL HEX-STEEL			2
	630042	ADHESIVE CABLE CLIP	RICHCO	CFCC-8	2
M3	SEE TABLE	4K × 8 EPROM	DATRON	—	1

NOTES. CIRCUIT REFER 430427

SEE SHEET 2 FOR LATEST ISSUE

TYPE	KIT	M3	450225 QTY.	EXT. TRIG. No.
1065	440082	290084-17F	0	400435
1061	440083	290070-17C	1	400400
1071	440084	290069-17C	1	400400

ISS	1	2	3	4	5	6	7	8	9
ECO	—	1217	1313	1371	1369, 1389	1410, 1411	1451	1495	1519
DATE	6.1.81	19.8.81	13.7.82	24.8.82	9.9.82	24.11.82	31.3.83	2.6.83	18.8.83
CHKD		[illegible]	MD	MD	MD	MD	MD	MD	MD

DATE 6.1.81.

DRAWN IL

CHECKED MD

APPROVED

DATE

datron ELECTRONICS LTD

TITLE I.E.E.E. 488 OPTION. 1071/1061/1065

DRAWING NUMBER 440082 440083 440084

SHEET 1 OF 1

J.W. 1164

DRAWING No 400294

FIRST USED ON

THIRD ANGLE PROJECTION

DRAWN IN ACCORDANCE WITH BS 308

ALL BURRS TO BE REMOVED

NOTES

IMPORTANT:

1. FIT M1 3 4 5 6 8 9 11 12 & 13 INTO 16 WAY AUGAT SOCKET PART NO 605061.
   FIT M7 & M10 INTO AUGAT SOCKET PART NO. 605062. 18 WAY.
   FIT M2 INTO AUGAT SOCKET PART No. 605060. 14 WAY.
2. TO REMOVE DISPLAY:-

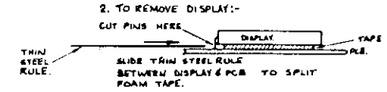

ISS	CHANGES
C	-
D	UPDATED PCB REMOVED S29
1	RELEASED TO PROD'N 29-9-78
2	SKETCH FOR MOTIFE SOCKETS ADDED BJ. ECO 778 5-12-78
3	ECO 860 WARNING LABEL 420080-1 ADDED ECO 868. C3 ECO WAS 0.33uF (60060) 25 JAN 79 W.G.S
4	ECO 867. LK8 ADDED BJ. 11 JUN 79.
5	ECO 988. 26-10-79 UPDATED PCB. BJ + 2 PIECES OF 630025 DELETED SOCKETS: 601011 & 601012 DISPLAY REMOVAL NOTE
6	ECO 1111 C9 ADDED JL 21 4 80
7	ECO 1213 LK3 DELETED JL 11. 6. 81
8	ECO 1352 MORE TAPE ADDED TO REVERSE OF DISPLAY. JR 1-7-82
9	ECO 1472 C10 ADDED COMPLETE WITH SOLDER TAG ENDS JL 2 6 82
10	ECO 1662 PCB WAS 160.4C R13, R14 C11 AND SCREEN PCB ADDED. C9 NOW TRACKED IN. JR 6 8 84
11	ECO 1661 C10 & 48A TAG DELETED RP. 10.9.84
12	CONT. ECO 1815 SCREEN PCB REMOVED. JR 10.1.85
13	ECO 1823. BJ. SIGNAL CABLE ASSY ADDED. 24th JAN 85.

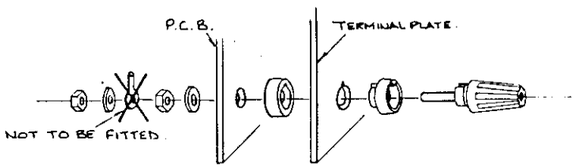

ASSEMBLE 6 TERMINALS TO TERMINAL PLATE No 450179 & PCB AS SHOWN ABOVE. TERMINAL COLOURS MUST BE AS INDICATED BELOW.

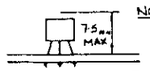

NOTE.
NO COMPONENTS TO STAND HIGHER THAN 7.5 mm (EXCEPT SWITCH'S & TERMINALS)
EXCEPT Q4 & Q5 WHICH MUST BE LESS THAN 6.5mm

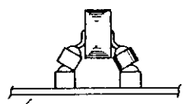

RESISTORS R1 & R2
2 OFF INSULATING BEADS 630024
ASSEMBLED ON EACH LEG A SHOWN
RESISTORS TO BE MOUNTED ON THE UNDER SIDE OF BOARD.

THE DISPLAY IS TO HAVE 7 PIECES OF PRESSURE SENSITIVE TAPE 630029. 1 PIECE (140mm LONG) STUCK TO THE P.C.B. BELOW THE LINE OF HOLES AND 6 PIECES (25mm LONG) STUCK TOGETHER IN PAIRS AND STUCK TO THE REVERSE OF DISPLAY IN POSITIONS SHOWN. LINE UP AND PRESS DISPLAY FIRMLY INTO PLACE THEN SOLDER THE 24 PINS WHICH ARE SHOWN BELOW (THERE ARE ONLY SOLDER PADS FOR THESE PINS).

8 & DIGIT DISPLAY 600017

FIT WARNING LABEL 420080-1 IN APPROX POSITION SHOWN ON TRACK SIDE OF P.C.B. NEAR MAINS AND DISPLAY CONNECTIONS

FRONT P.C.B. 410090-7

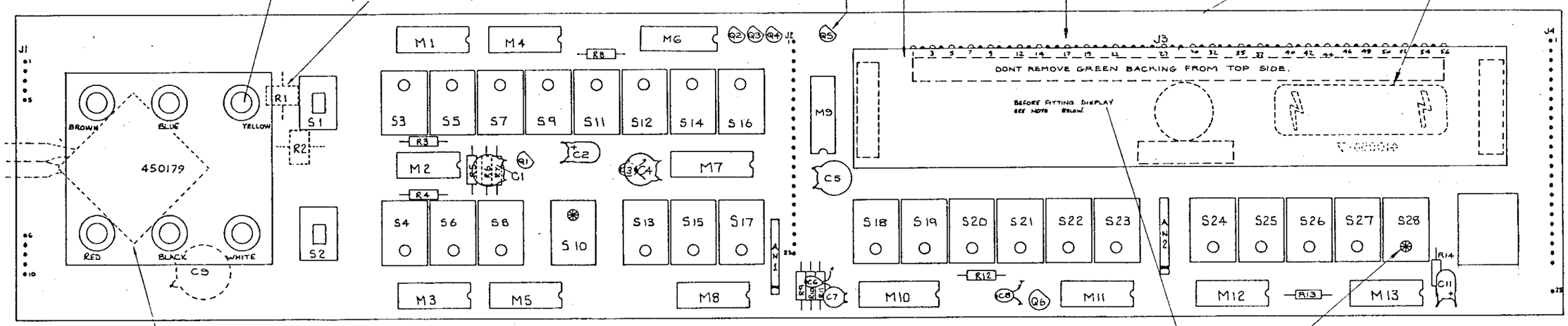

GREEN L.E.D.s 20 OFF
ALL OTHERS RED.

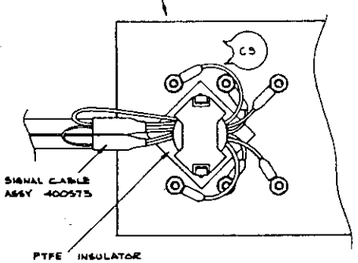

SOLDER SIGNAL CABLE ASSY 400573 TO REVERSE SIDE OF PCB WITH PTFE INSULATOR 450451 BETWEEN PCB & CHOKE.

CONNECT WIRES TO TERMINALS THUS :-

WHITE	WIRE	TO	WHITE	TERMINAL
YELLOW	"	"	YELLOW	"
GREEN	"	"	BLACK	"
RED	"	"	RED	"
VIOLET	"	"	BLUE	"
BLUE	"	"	BROWN	"

WHEN ASSEMBLY IS FINISHED TAPE CABLES TO PCB USING MASKING TAPE 630099.
DO NOT STICK MASKING TAPE OVER DISPLAY.!

ALL CAPACITORS TO BE LAID DOWN WHERE POSSIBLE, AS SHOWN. LEADS TO BE BENT AT RIGHT ANGLES THEN INSERTED INTO BOARD, THIS IS TO KEEP CAPACITORS AS LOW AS POSSIBLE.

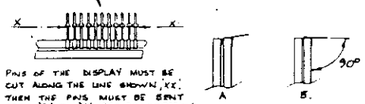

PINS OF THE DISPLAY MUST BE CUT ALONG THE LINE SHOWN 'XX'. THEN THE PINS MUST BE BENT FROM 'A' TO 'B' BEFORE INSERTION INTO PCB.

DRAWN B.J.	CHECKED	DIMENSIONS IN MILLIMETRES	TOLERANCES INCH DIMENSIONS: DECIMAL TO 3 PLACES ± .005; DECIMAL TO 2 PLACES ± .010; FRACTIONAL ± 1/64. METRIC DIMENSIONS: DECIMAL TO 2 PLACES ± 1mm; DECIMAL TO 1 PLACE ± 2mm; WHOLE DIMENSIONS ± 4mm. UNLESS OTHERWISE STATED. ANGULAR ± ½°	MATERIAL	DRAWING SIZE A1
TRACED	APPROVED	SCALE 2:1 NOT TO BE SCALED		FINISH	
DATE 19-4-78	DATE				

datron ELECTRONICS LTD. NORWICH.

TITLE FRONT P.C.B. ASSY. 1061 / 1071 / 1081.

DRAWING No. 400294

SHEET 1 OF 6

DRAWING No. 430294

FIRST USED ON 1061/71

THIRD ANGLE PROJECTION

DRAWN IN ACCORDANCE WITH BS 308

ALL BURRS TO BE REMOVED

NOTES

1. SIGNAL CD1 ON J2-15, THERE IS A LINK 'LK2' IN THIS SIGNAL LINE.

ISS.	CHANGES
2	REDRAWN. B.J. 21-3-79
3	ECO 1068 1069 CHANGE ON SHT 2 BJ 11-6-79
4	ECO 1111 SEE SHEET 2 IL 21.4.80
5	ECO 1472 C10 ADDED (4n7F) IL 2.6.83
6	ECO 1662 R13, R14, C11 AND SCREEN PCB ADDED. ON M4-5, G, B, 3, 11 AND M12 PIN 15 WENT TO 0V AND PIN 16 WAS N.C. M2 PIN 14 WAS N.C. JFM 7.8.84
7	ECO 1661 SEE SHT 2 RP 10.9.84
8	ECO 1823. SEE SHEET. 2. BJ. 24th JAN 85.

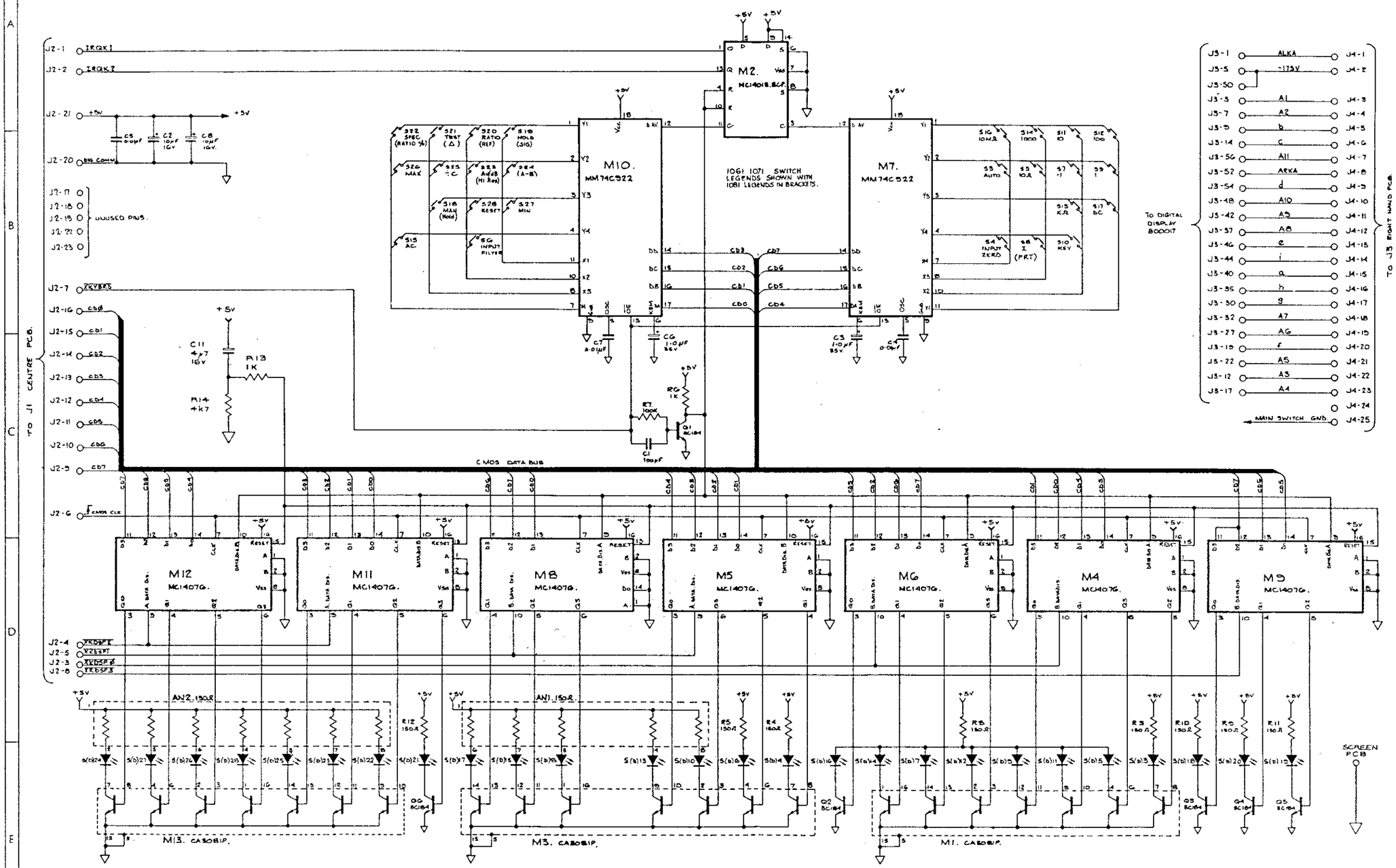

DRAWN	CHECKED	DIMENSIONS IN	TOLERANCES	MATERIAL
B.J.	R.P.	MILLIMETRES	INCH DIMENSIONS: DECIMAL TO 3 PLACES ± .005; DECIMAL TO 2 PLACES ± .010; FRACTIONAL ± 1/64; METRIC DIMENSIONS: DECIMAL TO 2 PLACES ± 1mm; DECIMAL TO 1 PLACE ± 2mm; WHOLE DIMENSIONS ± 4mm; UNLESS OTHERWISE STATED; ANGULAR ± °	FINISH
TRACED	APPROVED	SCALE — NOT TO BE SCALED		
DATE 21-3-75	DATE			

datron ELECTRONICS LTD. NORWICH.

TITLE: FRONT P.C.B. CIRCUIT DIAGRAM 1061/1071/1081

DRAWING No. 430294

DRAWING SIZE A1

SHEET 1 OF 2

DRAWING No. 430294

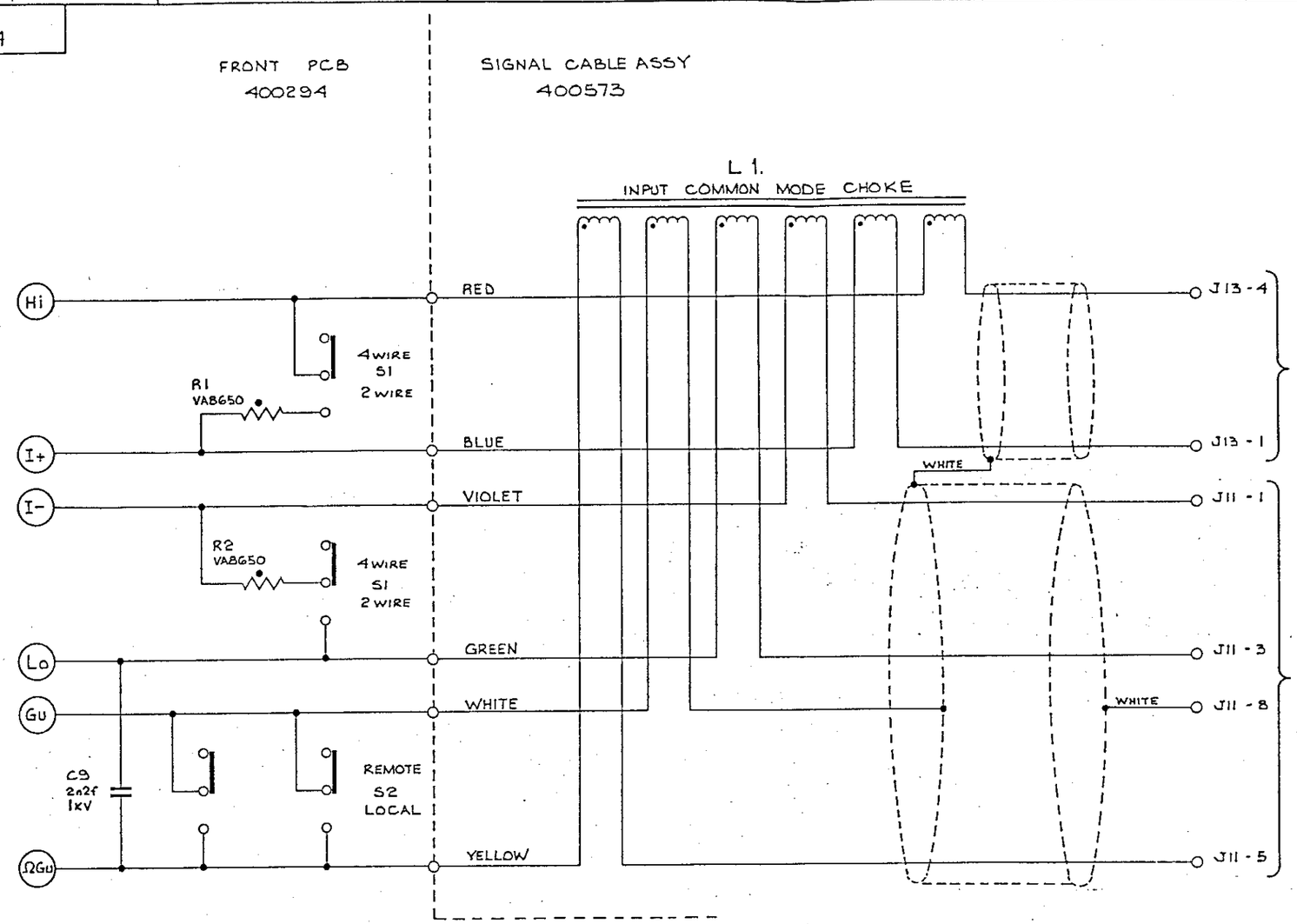

TO J13 REAR PCB.
(VIA SIGNAL CABLE 400573)
(WHEN REAR INPUT / RATIO IS FITTED, CONNECT TO J4 OF RATIO PCB.)

TO J11 REAR PCB.
(VIA SIGNAL CABLE 400573)
(WHEN REAR INPUT / RATIO IS FITTED, CONNECT TO J6 OF RATIO PCB.)

NOTES :-

1. GU (J1-5) SCREENS ALL CIRCUITRY ON THIS SHEET.
2. B.S. SCREENS Hi & I+.
3. ΩG. SCREENS Lo & I-.

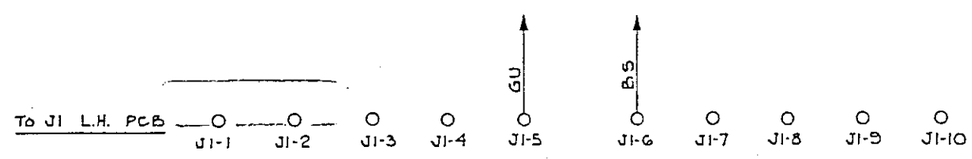

ISS.	CHANGES
2	REDRAWN BJ 21.3.79.
3	ECO 899 SCREEN FOR Hi & I+ NOW CONNECTED TO Gu. VIA WHITE WIRE BJ 11-6-79
4	ECO 1111 C9 ADDED. IL 21.4.80
5	ECO 1472 C10 ADDED (4n7f) IL 2.6.83.
6	ECO 1662 SEE SHEET 1.
7	ECO 1661 C10 DELETED AP. 10.9.84.
8	ECO 1823 BJ. RE-DRAWN. 25-1-85 CABLE ASSY ADDED TO FRONT PCB ASSY. CHOKE ADDED TO SIGNAL CABLE.

datron
INSTRUMENTS
NORWICH
ENGLAND

THIRD ANGLE PROJECTION

ALL BURRS TO BE REMOVED

DRAWN	B.S. JACKSON	DATE	24th JAN 85
CHECKED	M.J.D.	DATE	29.1.85
APPR	B Hume	DATE	29.1.85

DIMENSIONS IN MILLIMETRES

SCALE —

NOT TO BE SCALED

TOLERANCES
DECIMAL TO 2 PLACES ±·1mm
DECIMAL TO 1 PLACE ±·2mm
WHOLE DIMENSIONS ±·4mm
ANGULAR ± ½°
UNLESS OTHERWISE STATED

MATERIAL —

FINISH —

ASSY DRG & PARTS LIST	400294
CIRCUIT DIAGRAM	430294
CHECK PROCEDURE	460294
CHECK LIST	470294

TITLE
FRONT PCB CIRCUIT DIAGRAM

DRAWING No. 430294.

SHEET 2 OF 2

DRAWING No. 400295

FIRST USED ON

THIRD ANGLE PROJECTION

DRAWN IN ACCORDANCE WITH BS 308

4 OFF. STEEL M3x8mm SCREW. 611016.
9 OFF. NYLON M3x8mm SCREW. 611037.
4 OFF STEEL SHAKEPROOF WASHER. 613005.
9 OFF NYLON M3 WASHER. 613017.
2 OFF STEEL M3 NUT. 615002.
3 OFF NYLON M3 NUT. 615008.

ALL BURRS TO BE REMOVED

NOTES

ISS.	CHANGES
C	
D	UPDATED PCB. B.J. 22-8-78
1	RELEASED TO PROD'N 20-9-78
2	ECO 783. 15-12-78 COMPONENT CHANGES. B.J.
3	ECO 865 WARNING LABEL 4200804 ADDED 25 JAN 79 W.G.S
4	ECO 876, 882, 900. C6 ADDED. J5 ADD GND. ISSUE 4 PCB. L1, L2 & L3 ADDED. R13 ADDED. C8 MOVED. R2 & R3 CHANGED. G.G.79. B.J.
5	ECO 951 & 964 PCB WAS ISS 4. J1, 8 & 14. REV'S GO2001 DELETED. I FUSE LINK WAS BASKET WIRE & PINS. W/I WAS 2050113. MICA WASHER NEED 618005. B.J. 31-10-79
6	ECO. 1085 1097 2OFF SOLDER PINS & 1 OFF 4 WAY WAFER (J13) DELETED. 21.4.80
7	ECO 1441. R9 WAS 1K W. B.J. 11-5-83
8	ECO.1452 M1 WAS MC7805 CT. FIXINGS MODIFIED TO SUIT LM309K DEVICE. C8 WAS 10nF CER. DISC 17.2.83

CONT...

THIS HEATSINK HELD TO PCB BY
STEEL M3x8mm SCREWS
STEEL M3 SHAKEPROOF WASHERS

Q1 HELD TO HEATSINK WITH
NYLON M3x8mm SCREW
NYLON M3 WASHER
NYLON M3 NUT

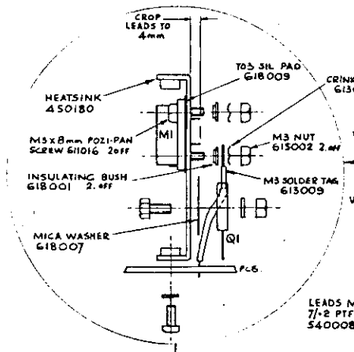

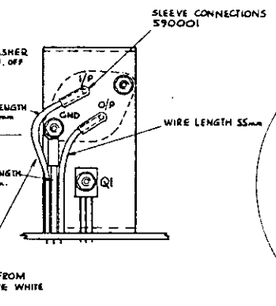

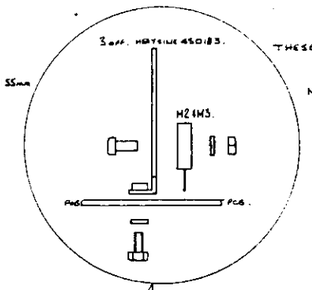

THESE 2 HEATSINKS HELD TO PCB WITH NYLON M3x8mm SCREWS & NYLON M3 WASHERS

M2 & M3 HELD TO HEAT SINKS WITH STEEL M3x8mm SCREWS
STEEL M3 SHAKEPROOF WASHERS.
STEEL M3 NUTS.

FIT WARNING LABEL 4200804 IN APPROX POSITIONS SHOWN ON TRACK SIDE OF P.C.B. IN MAINS AREA.

HEATSINK COMPOUND ON BOTH SIDES OF MICA WASHERS ON Q1

4BA SOLDER TAG 613009
7/2 PTFE WIRE x 30mm 540008
HEATSHRINK x 20mm 580006

BLACK DOTS INDICATE THAT PIN HAS TO BE REMOVED BEFORE INSERTION INTO P.C.B.

MOUNT D4 ON STEATITE BEAD 630024 2OFF

TEST POINT TERMINAL (620007) 8 OFF

REAR PCB 410091-5A

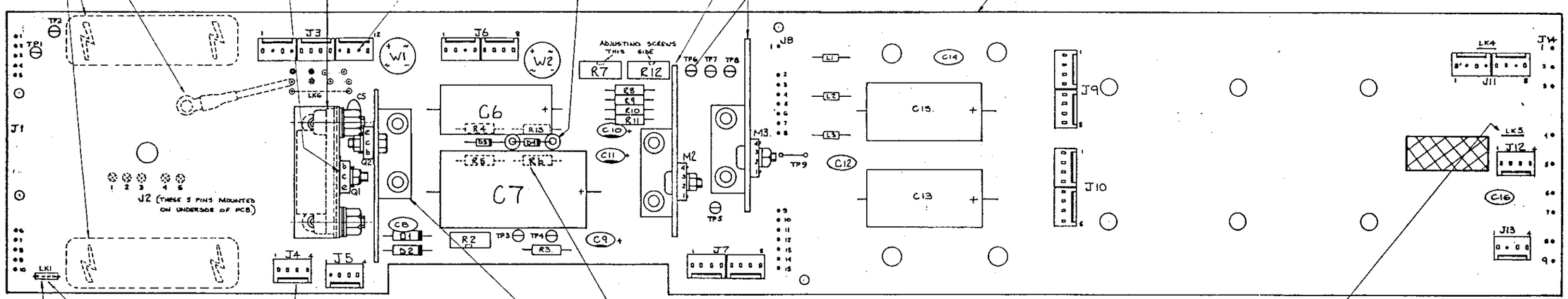

ALL LINKS USE 22 SWG TIN. CU. WIRE (DATRON PART No. 540002)

FLAT PIN ASSY GOLD (PART No 604033) 17 OFF.

BACKPLATE INDICATES WHICH WAY THE PIN ASSY FITS INTO THE P.C.B.

LINKS 1, 2 & 3 MUST BE SLEEVED USING 590004

R4, R5 & R6 ARE POSITIONED UNDER THE CURVE OF C6 & C7. (AS SHOWN BELOW)

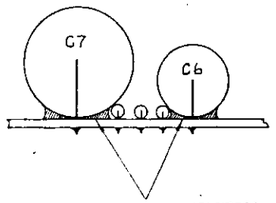

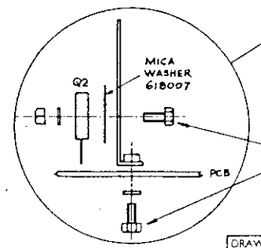

THE 4 LARGE CAPACITORS C6, C7, C13 & C15 ARE TO BE BEDDED INTO SILICONE RUBBER COMPOUND PART Nº 900004 BEFORE SOLDERING. THIS SHOULD FINISH UP AS ABOVE DRAWING.

MAKE LK5 AS A TEST POINT LOOP TO FACILITATE EASE OF 'SNIPPING' WHEN NOT REQUIRE.

FOR 115 V OPERATION
REMOVE LK1, FIT LK2 & LK3

NO	CHANGES
9	R14 C1 DELETED. LK6 ADDED 4BA SOLDER TAG WIRE ASSY ADDED. 2.6.83 ECO1470
10	ECO 1517 J3,4,6,7,9,10 WERE TIN. 17.8.83
11	ECO1525 D1 AND D2 WERE 200010. PCB WAS ISSUE 5. 15.8.83
12	ECO. 1685 D4 MOUNTED ON STEATITE BEADS. 20.8.84

DRAWN B.J.	CHECKED	DIMENSIONS IN 1 MILLIMETRES	TOLERANCES ANGULAR ± °
TRACED	APPROVED	SCALE 2:1 NOT TO BE SCALED	INCH DIMENSIONS DECIMAL TO 3 PLACES ± .005; DECIMAL TO 2 PLACES ± .010; FRACTIONAL ± 1/64
DATE 26-4-78	DATE		METRIC DIMENSIONS DECIMAL TO 3 PLACES ± 1mm; DECIMAL TO 1 PLACE ± 2mm; WHOLE DIMENSIONS ± 4mm; UNLESS OTHERWISE STATED

MATERIAL

FINISH

datron ELECTRONICS LTD. NORWICH.

TITLE REAR P.C.B. ASSEMBLY. 1061/1071/1081

DRAWING SIZE A1

DRAWING No. 400295

SHEET 1 of 6

DRAWING No. 430295.
FIRST USED ON 1061/71.

THIRD ANGLE PROJECTION

DRAWN IN ACCORDANCE WITH BS 308

ALL BURRS TO BE REMOVED

NOTES

1. T1, T2, MAINS INPUT FILTER, F1, EXT. TRIG. OPTION, ERROR SELECT & CAL ENABLE. ARE ALL FITTED ON THE REAR PANEL ASSY 400500, BUT INCLUDED ON THIS CIRCUIT DIAGRAM.

ISS.	CHANGES	
2	RE-DRAWN 30-3-79 B.J.	
3	ECO 1082 & 1500. NAMES C18, E18, L1, L2, L3 & LK4. R5 & R2 CHANGED 18-6-79. B.J.	AC
4	ECO 951 & 954. W1 WAS W004 (1N4001S) J8 PIN 16' CHANGED. J2 - - - LK5 ADDED. B.J. J8-8 ADDED. 31-10-79	MD
5	ECO. 1085 J13 PINS 1 TO 4 DELETED IL 21.4.80	MD
6	ECO. 1125 FUSE IN NEUTRAL LINE TO J3-5 DELETED. IL 22.5.80	MD
7	ECO. 1452 M1 WAS MC7805CT C8 WAS 10nF IL 16.2.83	MD
8	ECO. 1470 R1 (100k) & C1 (100nF) DELETED. LK6 ADDED IL 1.6.83	MD

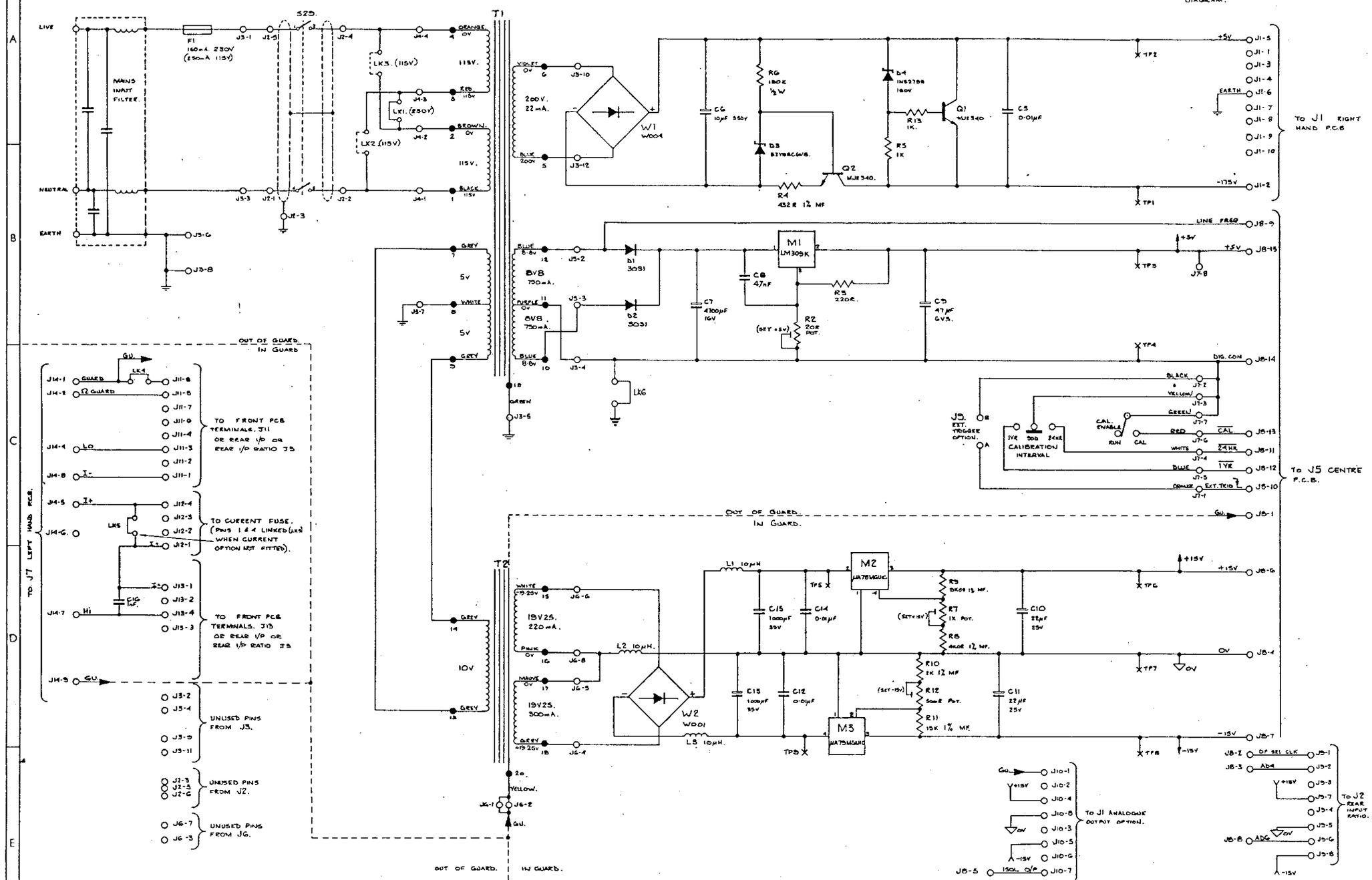

DRAWN	CHECKED	DIMENSIONS IN	TOLERANCES	MATERIAL	datron ELECTRONICS LTD. NORWICH.	DRAWING SIZE
B.J.		MILLIMETRES	INCH DIMENSIONS DECIMAL TO 3 PLACES ± ·005; DECIMAL TO 2 PLACES ± ·010; FRACTIONAL ± 1/64; METRIC DIMENSIONS DECIMAL TO 2 PLACES ± 1mm; DECIMAL TO 1 PLACE ± 2mm; WHOLE DIMENSIONS ± 4mm; UNLESS OTHERWISE STATED; ANGULAR ± °	FINISH	TITLE: REAR PCB (INCLUDING REAR PANEL) CIRCUIT DIAGRAM 1061/1071/1081	A1
TRACED	APPROVED	SCALE			DRAWING No. 430295	SHEET 1 OF 1
DATE 30-3-79.	DATE	NOT TO BE SCALED				

DRAWING No. 400296

FIRST USED ON 1061 / 1071

THIRD ANGLE PROJECTION

DRAWN IN ACCORDANCE WITH BS 308

ALL BURRS TO BE REMOVED

NOTES

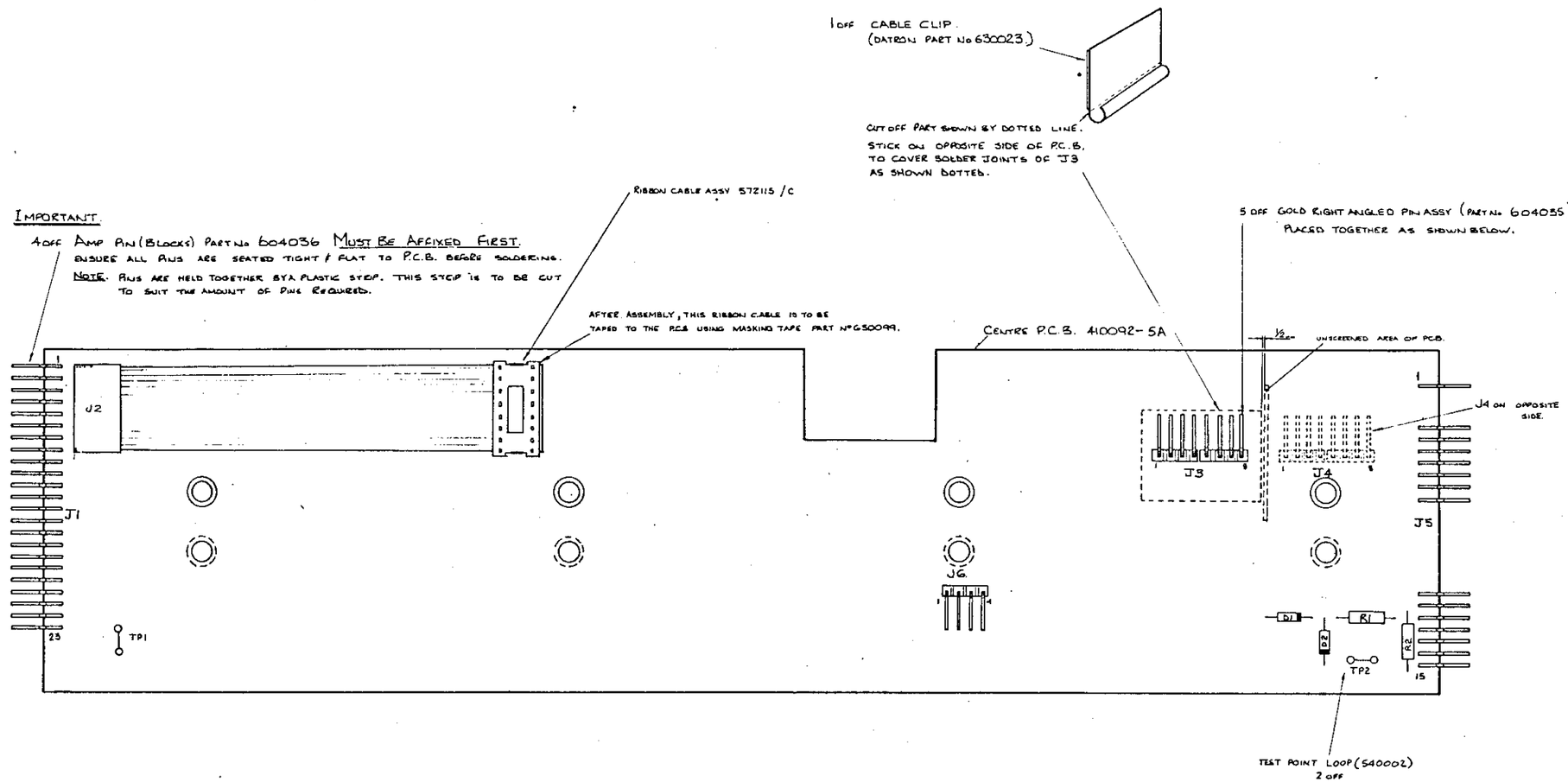

ISS	CHANGES
C	
D	D, D2, D3, R1 & R2 ADDED TO NEW 1/96 PCB 6.J.25-8-78
1	RELEASED TO PROD'N 28-3-78
2	ECO 784. RIBBON CABLE MODS. B.T. 6-12-78
3	ECO 8-49. PCB MODS. B.J. 4-5-79.
4	ECO 867. PCB UPDATE. B.J. 11-6-79. & ECO 904 572130 CHANGE TO 572131/A 605004 CLIPS REMOVED & ECO 876 J3, 4 & C New Gold Not Tin
5	ECO 952 29-10-79. PCB WAS 1/95 4A. B.J. PNB OF J5 REMOVED. PCB CUT OUT INCREASED IN DEPTH.
6	ECO. 1000 RIBBON CABLE ASSY WAS 572100/A IL 18.1.80
7	ECO. 1102 PCB WAS ISSUE 5 IL 14.4.80
8	ECO 1217 RIBBON CABLE WAS 572130/B VR 18.8.81

DRAWN B.J.	CHECKED	DIMENSIONS IN MILLIMETRES	TOLERANCES ANGULAR ± ½ INCH DIMENSIONS DECIMAL TO 3 PLACES ± .005 DECIMAL TO 2 PLACES ± .010 FRACTIONAL ± 1/64 METRIC DIMENSIONS DECIMAL TO 2 PLACES ± 1mm DECIMAL TO 1 PLACE ± 2mm WHOLE DIMENSIONS ± 4mm UNLESS OTHERWISE STATED
TRACED	APPROVED	SCALE 2:1 NOT TO BE SCALED	MATERIAL / FINISH
DATE 25-4-78	DATE		

datron ELECTRONICS LTD. NORWICH.

TITLE: CENTRE P.C.B ASSEMBLY. 1061/1071/1081

DRAWING SIZE: A1

DRAWING No. 400296

SHEET 1 of 2

DRAWING No. 430296

FIRST USED ON 1061 / 1071

THIRD ANGLE PROJECTION

DRAWN IN ACCORDANCE WITH BS 308

ALL BURRS TO BE REMOVED

NOTES

1. "IN GUARD" TRACKS TO BE ON CCT. SIDE (SHT. 2) & "OUT OF GUARD" TRACKS TO BE ON THE COMP. SIDE (SHT. 3) OF P.C.B. WHERE POSSIBLE.

ISS.	CHANGES
D	
1	RELEASED TO PRODN 29-9-78.
2	ECO. 849. J3-1 SIG JOINED TO J3-7. B.J. 4-5-79
3	ECO 992. B.J. J5-8 ADDED & J5-1 GND. DELETED 29-10-79

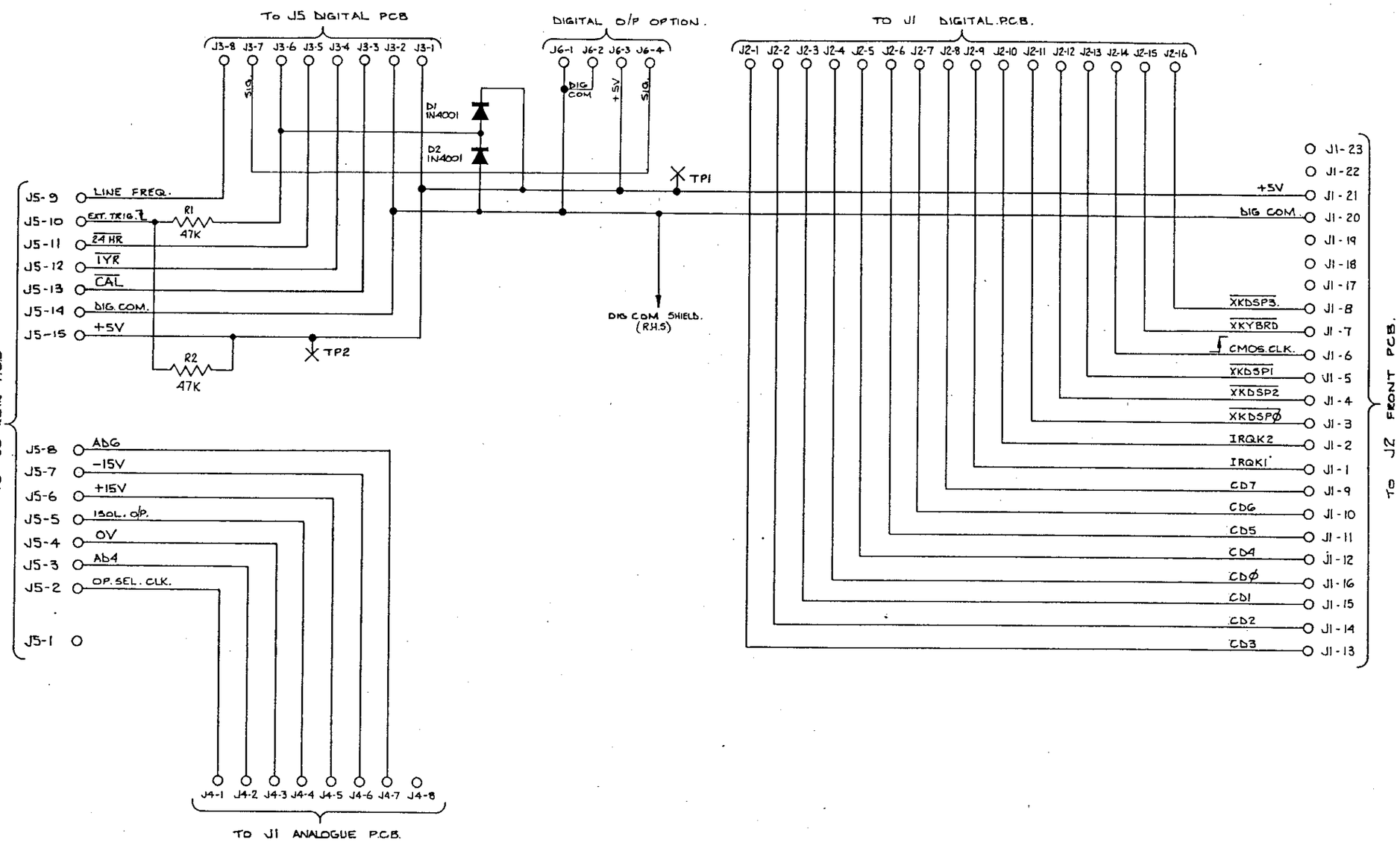

DRAWN	CHECKED	DIMENSIONS IN	TOLERANCES, ANGULAR ± ½° INCH DIMENSIONS DECIMAL TO 3 PLACES ± .005 DECIMAL TO 2 PLACES ± .010 FRACTIONAL ± 1/64 METRIC DIMENSIONS DECIMAL TO 2 PLACES ± 1mm DECIMAL TO 1 PLACE ± 2mm WHOLE DIMENSIONS ± 4mm UNLESS OTHERWISE STATED	MATERIAL	datron ELECTRONICS LTD. NORWICH.	DRAWING SIZE
B.J.		MILLIMETRES				A2
TRACED	APPROVED	SCALE		FINISH	TITLE	DRAWING No. / SHEET
DATE 30-5-78	DATE	NOT TO BE SCALED			CENTRE PCB SCHEMATIC 1061 / 1071 / 1081	430296 / 1 OF 1

DRAWING No.
400297.
FIRST USED ON 1061 /71

THIRD ANGLE PROJECTION

DRAWN IN ACCORDANCE WITH BS 308

ALL BURRS TO BE REMOVED

NOTES

ISS	CHANGES
C	–
D	NEW ISSUE P.C.B. 05 24.8.78 HD
1	RELEASED TO PRODN 25.9.78
2	(CORRECT) PCB UPDATE BJ 11.6.79 HD

USE THE GOLD 4 RIGHT ANGLED PIN ASSY (PART NO 604035). 12 OFF.
PLACED TOGETHER TO MAKE UP THE REQUIRED AMOUNT OF CONTACTS (SHOWN BELOW).
REMOVE PINS IN PLACES SHOWN BY BLACK DOTS.

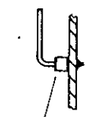

IMPORTANT.

2 OFF. AMP PINS (PART No 604036) MUST BE AFFIXED FIRST.
ENSURE ALL PINS ARE SEATED TIGHT & FLAT TO P.C.B. BEFORE SOLDERING.

NOTE. PINS ARE HELD TOGETHER BY A PLASTIC STRIP. THIS STRIP IS TO BE CUT TO SUIT THE AMOUNT OF PINS REQUIRED.

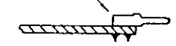

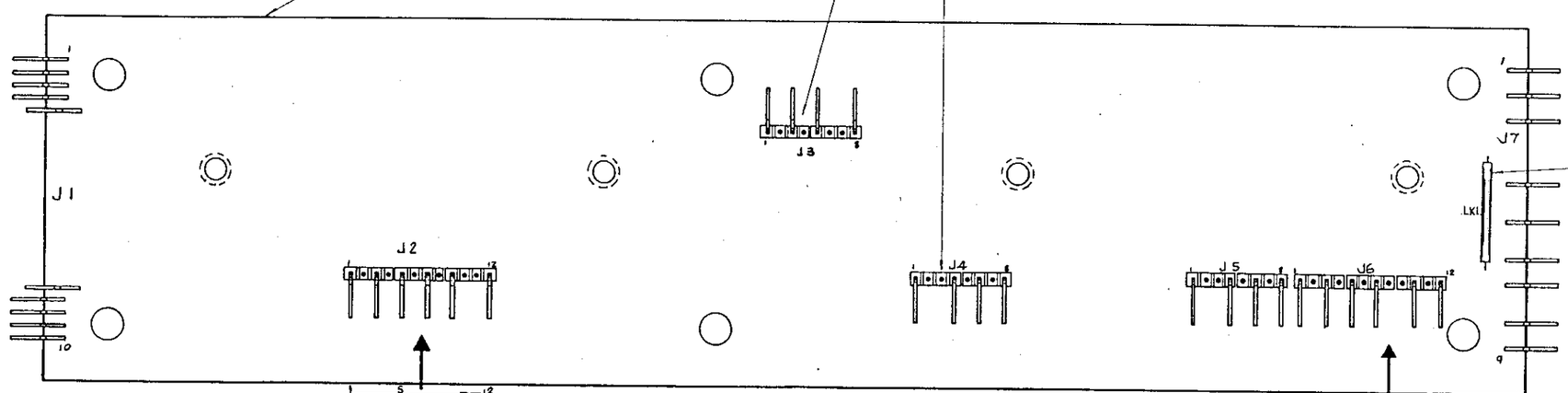

PUSH SOCKET ONTO SET OF PINS AS SHOWN BY ARROW.

INSERT 1 GOLD CRIMP PIN IN POSITION 12 AS SHOWN BY SHADED AREA.

BEND WIRE AND INSERT IT INTO 12 WAY SOCKET. ONE END IN HOLE 1 THE OPPOSITE END INTO HOLE 5.

4 OFF PLASTIC PEGS (PART No 606004) INSERTED INTO HOLES.

PLASTIC PEGS IN HOLES 8 & 9. (AS SHOWN)

INSERT WIRES IN HOLES 10 & 12 OF SOCKET. AND 1 & 3 AS SHOWN ABOVE.

2 OFF 12 WAY SOCKET. (PART No 605053).

AFFIX 7 OFF GOLD CRIMP PINS (PART No 605057) ONE ON EACH END OF WIRES, THE 7TH INTO PIN 12 OF SOCKET.

3 OFF. 40mm OF BROWN WIRE, (PART No 510111) AND STRIP 3mm FROM EACH END (AS SHOWN).

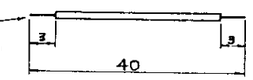

DRAWN	CHECKED	DIMENSIONS IN	TOLERANCES	MATERIAL
B.T.	DCG	MILLIMETRES	INCH DIMENSIONS DECIMAL TO 2 PLACES ± .005; DECIMAL TO 3 PLACES ± .010; FRACTIONAL ± 1/64; METRIC DIMENSIONS DECIMAL TO 2 PLACES ± 1mm; DECIMAL TO 1 PLACE ± 2mm; WHOLE DIMENSIONS ± 4mm; UNLESS OTHERWISE STATED; ANGULAR ± .5°	
TRACED	APPROVED	SCALE 2:1		FINISH
DATE 21.4.78	DATE	NOT TO BE SCALED		

datron ELECTRONICS LTD. NORWICH.

TITLE 1061/71/81 L.H. P.C.B. ASSEMBLY

DRAWING SIZE A1

DRAWING No. 400297

SHEET 1 OF

DRAWING No. 430297

FIRST USED ON 1061/1071

THIRD ANGLE PROJECTION

DRAWN IN ACCORDANCE WITH BS 308

ALL BURRS TO BE REMOVED

NOTES

1/ ALL CIRCUIT TO BE ON THE COMPONENT (SHEET 3) SIDE OF P.C.B WHERE POSSIBLE.

2/ INPUT GUARD, VIA J7-1 TO PROVIDE ELECTROSTATIC SHIELD ON 'CIRCUIT' (SHEET 2) SIDE OF P.C.B. WHERE POSSIBLE.

3/ B.S, VIA J3-5, TO ENCLOSE Hi AND I+ CIRCUITS ON P.C.B WHERE POSSIBLE.

4/ Ω GUARD VIA J3-3 TO ENCLOSE LO & I- CIRCUITS ON P.C.B WHERE POSSIBLE.

ISS.	CHANGES
D	
1	RELEASED TO PROD'N. 29-9-78

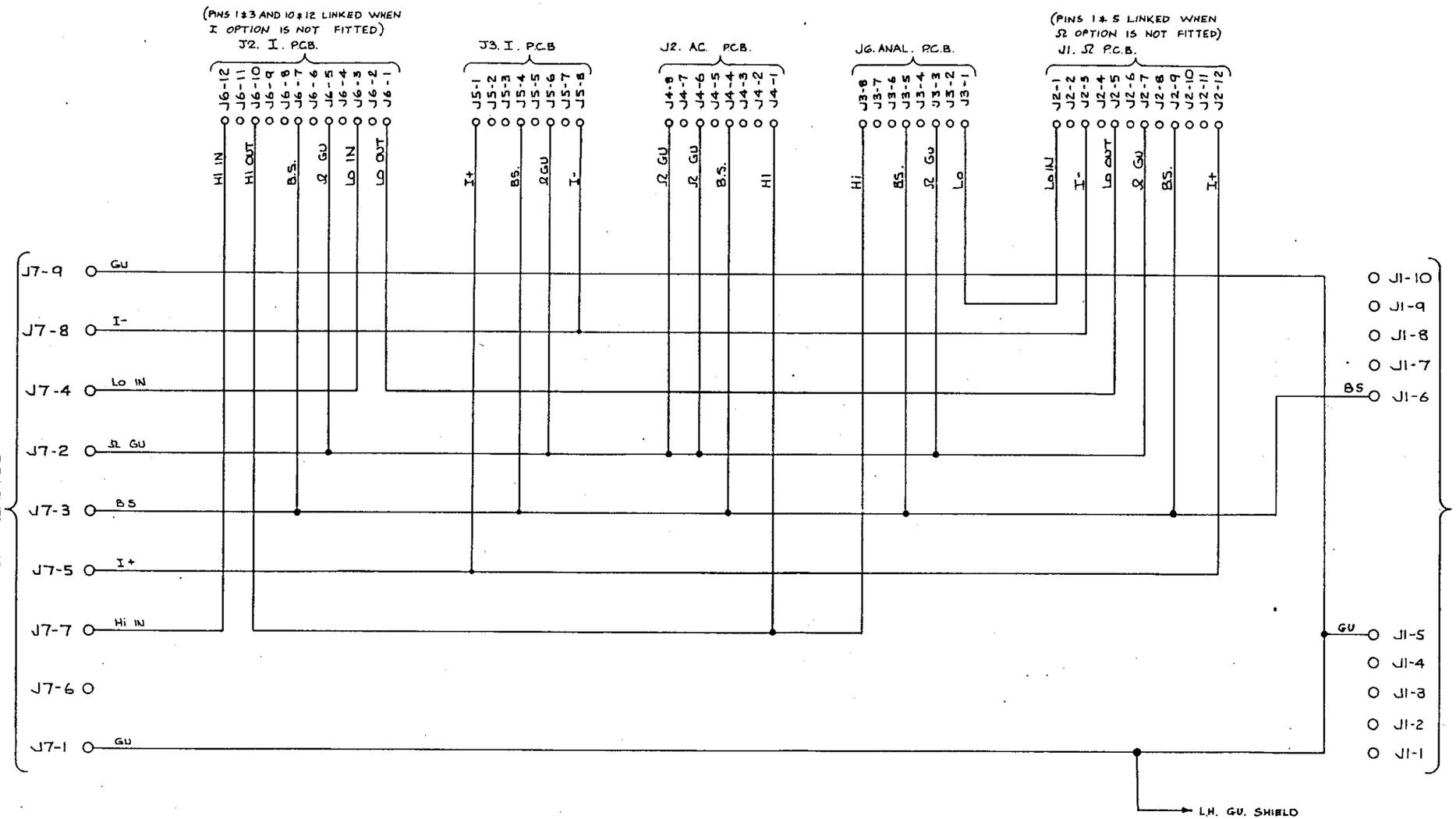

DRAWN	CHECKED	DIMENSIONS IN	TOLERANCES ANGULAR ± ½° INCH DIMENSIONS DECIMAL TO 3 PLACES ± .005 DECIMAL TO 2 PLACES ± .010 FRACTIONAL ± 1/64 METRIC DIMENSIONS DECIMAL TO 2 PLACES ± 1mm DECIMAL TO 1 PLACE ± 2mm WHOLE DIMENSIONS ± 4mm UNLESS OTHERWISE STATED	MATERIAL	datron ELECTRONICS LTD. NORWICH.	DRAWING SIZE
B.J.		MILLIMETRES				A2
TRACED	APPROVED	SCALE		FINISH	TITLE	DRAWING No. / SHEET
DATE 30.5.78	DATE	NOT TO BE SCALED			L.H. P.C.B. SCHEMATIC 1061/1071/1081	430297 / 1 OF 1

DRAWING No. 400298

FIRST USED ON 1061/71

THIRD ANGLE PROJECTION

DRAWN IN ACCORDANCE WITH BS 308

ALL BURRS TO BE REMOVED

NOTES

ISS.	CHANGES
C	
D	NEW ISSUE P.C.B. B.J. 24-8-78
1	RELEASED TO PROD'N 29-5-78.
2	ECO 850. 4-5-79 B.J. UPDATED PCB. J1-6 WAS REMOVED.
3	ECO 8674 304. B.J. UPDATED PCB. CABLE ASSY 400268 CHANGED TO 574270/A
4	ECO 943. 10.9.79 RIBBON CABLE ASSY. WAS 574250/A IL
5	ECO 1217 J2 WAS 400265. DK 18-8-81
6	ECO 1474 PCB ISSUE Nº WAS 4 IL 3.6.85

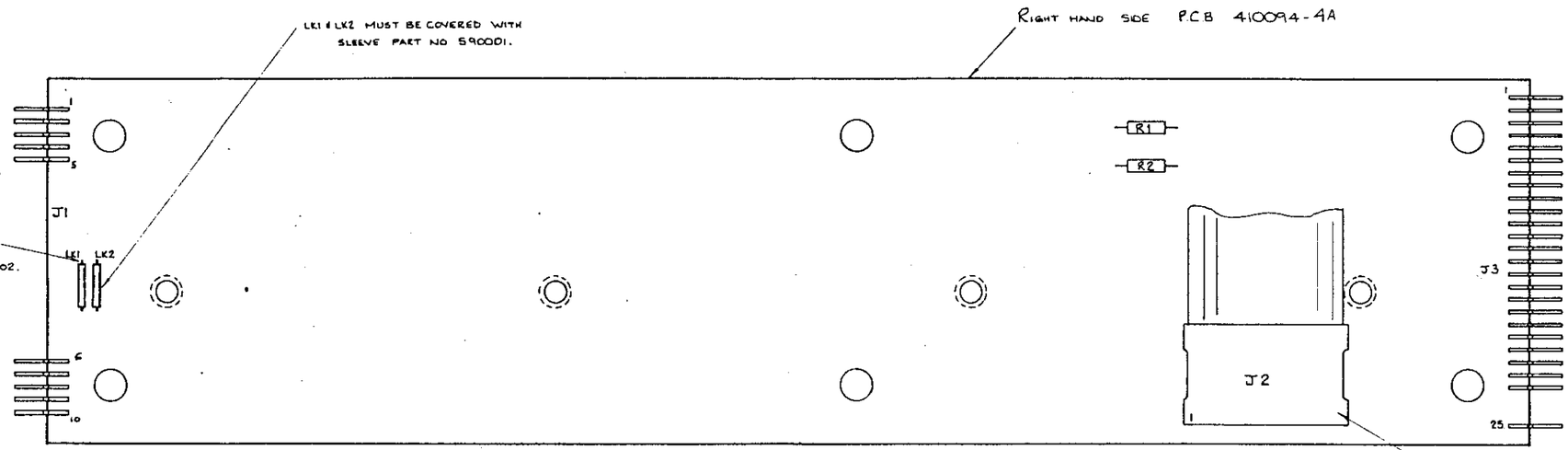

RIBBON CABLE ASSY
PART No 574270/C

NOTE. WHEN SOLDERING CABLE PLUG INTO BOARD ENSURE THAT THE PLUG BODY SITS FLAT AGAINST PCB.

AFTER ASSEMBLING PCB WRAP THE ABOVE RIBBON CABLE ROUND THE PCB AND TAPE DOWN USING MASKING TAPE PART No G30099.

IMPORTANT

AMP PINS (DATRON PART No. 604036.) 4 OFF MUST BE AFFIXED TO P.C.B FIRST.
ENSURE ALL PINS ARE SEATING TIGHTLY AND FLAT TO PCB. BEFORE SOLDERING.

NOTE. PINS ARE HELD TOGETHER BY PLASTIC STRIP. THIS STRIP IS TO BE CUT TO SUIT THE AMOUNT OF PINS REQUIRED.

FOR EXAMPLE. ABOVE 2 BLOCKS OF 5 PINS ARE REQUIRED, THEREFORE STRIP OF 10 PINS TO BE CUT IN HALF.

DRAWN B.J.	CHECKED	DIMENSIONS IN MILLIMETRES	TOLERANCES ANGULAR ± ° INCH DIMENSIONS DECIMAL TO 3 PLACES ± .005 DECIMAL TO 2 PLACES ± .010 FRACTIONAL ± 1/64 METRIC DIMENSIONS DECIMAL TO 2 PLACES ± 1mm DECIMAL TO 1 PLACE ± 2mm WHOLE DIMENSIONS ± 4mm UNLESS OTHERWISE STATED	MATERIAL	datron ELECTRONICS LTD. NORWICH.	DRAWING SIZE A1
TRACED	APPROVED	SCALE 2:1 NOT TO BE SCALED		FINISH	TITLE 1061/71/81. R.H. P.C.B. ASSEMBLY.	DRAWING No. 400298	SHEET 1 of 2
DATE 20.4.78.	DATE					

DRAWING No.	THIRD ANGLE PROJECTION	ALL BURRS TO BE REMOVED	NOTES
430298	DRAWN IN ACCORDANCE WITH BS 308		
FIRST USED ON 1061 / 1071			

ISS.	CHANGES
b	
1c	RELEASED TO PROD 20-9-78
2	DIG COM SCREEN REMOVED. B.J. 60850 4-5-79.

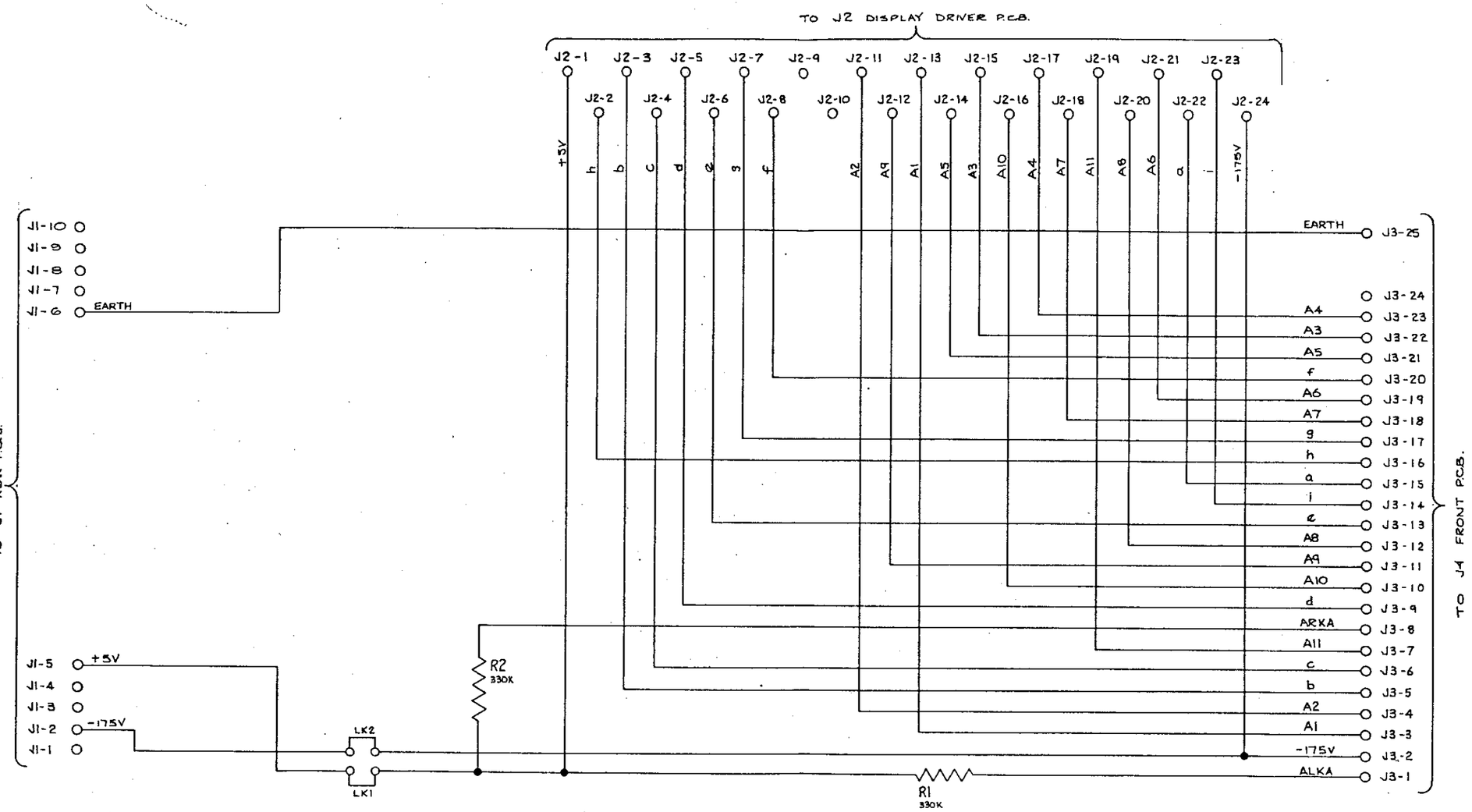

DRAWN	CHECKED	DIMENSIONS IN	TOLERANCES ANGULAR ± ½°	MATERIAL	datron ELECTRONICS LTD. NORWICH.	DRAWING SIZE
B.J.		MILLIMETRES	INCH DIMENSIONS DECIMAL TO 3 PLACES ± ·005; DECIMAL TO 2 PLACES ± ·010; FRACTIONAL ± 1/64			A2
TRACED	APPROVED	SCALE	METRIC DIMENSIONS DECIMAL TO 2 PLACES ± 1mm; DECIMAL TO 1 PLACE ± 2mm; WHOLE DIMENSIONS ± 4mm	FINISH	TITLE R.H. SIDE P.C.B. SCHEMATIC. 1061/1071/1081	DRAWING No. 430298
DATE 26-5-78	DATE	NOT TO BE SCALED	UNLESS OTHERWISE STATED			SHEET 1 OF 1

DRAWING No. 400299.
FIRST USED ON 1071

THIRD ANGLE PROJECTION

DRAWN IN ACCORDANCE WITH BS 308

ALL BURRS TO BE REMOVED

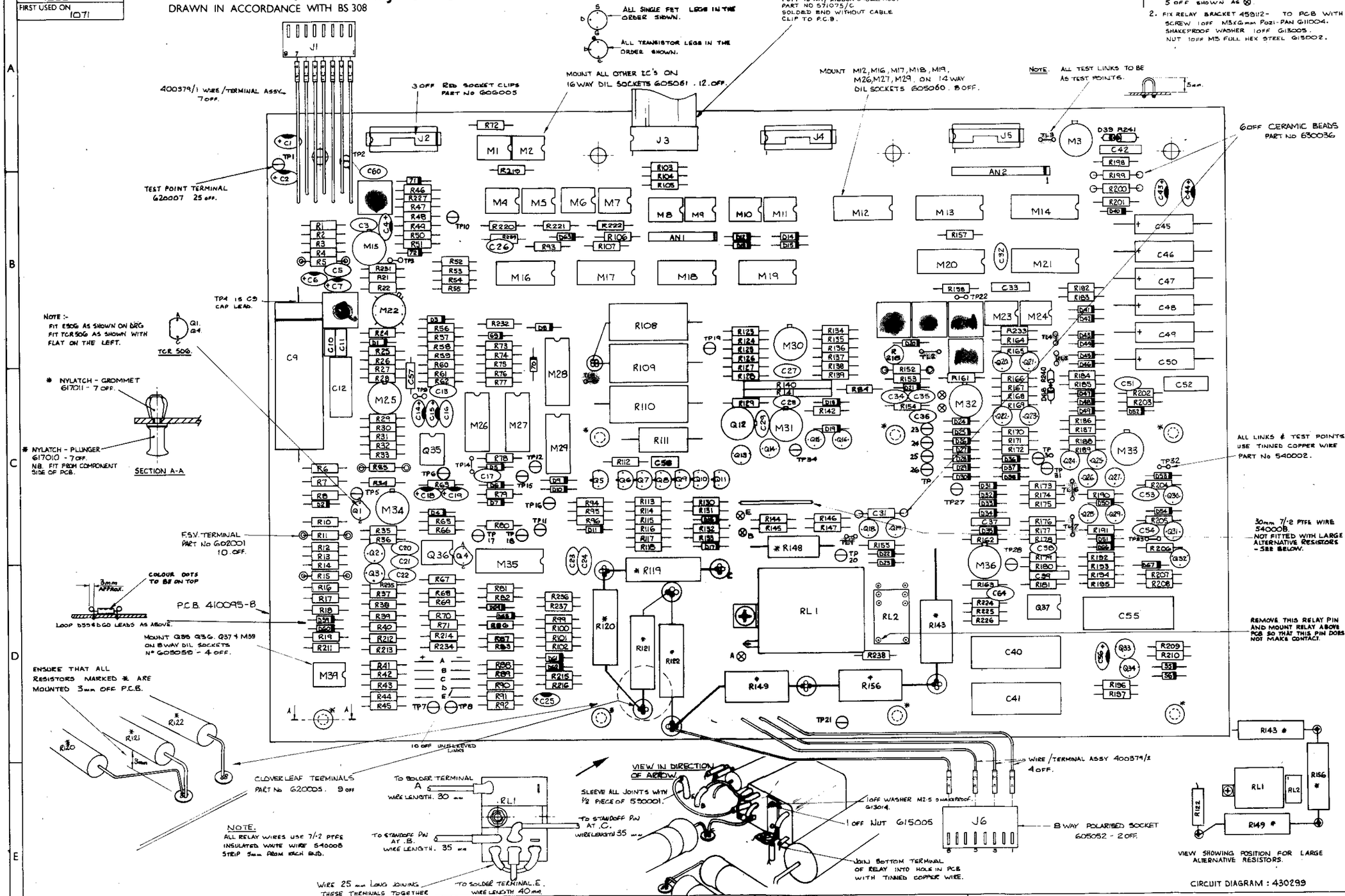

NOTES

1. SOLDER P.C.B TERMINAL LUG PART No G20005 5 OFF SHOWN AS ⊗
2. FIX RELAY BRACKET 458112- TO PCB WITH SCREW 1 OFF M3X6mm POZI-PAN G11004. SHAKEPROOF WASHER 1 OFF G13005. NUT 1 OFF M3 FULL HEX STEEL G15002.

CIRCUIT DIAGRAM : 430299

ISS	CHANGES
A	
B	UPDATED PCB.
1	RELEASED TO PROD'N 23-11-78
2	COMPONENT VALUES CHANGED REFER ECO ECO 807 26-12-78 W.G.S.
3	COMPONENT VALUES CHANGED. REFER TO ECO 826 & ECO 884. 4.4.79 IL
4	COMPONENT VALUES CHANGED. REFER TO ECO 853. 25-4-79 B.J.
5	D57 REMOVED PTS. LT. CHANGE TO R27 ECO. 886/922/904. 19.6.79 IL
6	ECO 915, 926 & 929. C5, FROM M0018 TO 140057. R260 FROM 220K TO 22K. D40 RE-INSTATED.
7	ECO. 937. PCB RAISED TO 155.6A IL 4.9.79
8	ECO 950 C59 ADDED ACROSS M16-8 & M16-11 IL 20.8.79
9	ECO 968, 968 & 985 REMOVE C50 CHANGED R182, R183, C85, C31, C12, R268 M26, M56 12-10-79 . B.J.
10	ECO 987, 985 & 987. RELAY WIRES WERE PVC INSULATED. R57 WAS 47R. R127 WAS 10M (041008) R219, 220, 221 & 222 WERE 1M C&E5. R227 & C60 ADDED. B.J. 29-10-79
11	ECO. 1000, 1032 C8 DELETED VALUE CHANGES TO C57 & R58 IL 16.1.80
12	ECO. 1049, 1072, 1075, 1076 PARTS LIST CHANGES. IL 27.2.80.
13	ECO 1088, 1101, 1107 CLOVERLEAFS WERE 18 OFF. D58 REMOVED & REPLACED BY LK3. R217, C59 & LINKS 'F' & 'G' DELETED. PARTS LIST CHANGES TO R27, R46 R52 R106 R107 C26 M7 M16 IL 17.4.80
14	ECO 1117, 1126 D68 D69 D70 & R252 ADDED. IL 18.6.80
15	ECO. 1141 Nº OF CLOVERLEAFS WAS 9. LINK ADDED BETWEEN R148 & R122 — SEE SKETCH. IL 29.9.80
16	ECO. 1114, 1184, 1187, 1188, 1190 R236 & R237 ADDED. WIRE TERMINAL ASSY TO J1-7 WAS FITTED TO J1-8. TRACK FROM WHERE J1-7 JOINS PCB, CUT ON COMP. SIDE. LK21 ADDED. FURTHER PARTS LIST CHANGES IL 15.12.80
17	ECO 1217 J3 WAS 16 WAY SOCKET OK 17-8-81
18	ECO 1264, 1267 PARTS LIST CHANGES IL 3.11.81
19	ECO 1245 1273 M7 WAS 220023 OK 5-1-82 RLB
20	ECO 1258. C9 ALREADY ADDED TO PL. 30-3-82 BJ
21	ECO. 1284 1362 PCB WAS 155 EA R224-R226, R231, R238-R235, R238 & R239, C64 D71-D72 & Q37 ADDED. Nº OF FSV TERMS WAS 8 EA, Nº OF CLOVER LEAF TERMS WAS 10; Nº OF SOLDER PINS WAS 4 TLB WAS TP18, 8 PIN SOCKET ADDED (Q37) PARTS LIST CHANGES ALSO IL 26.5.82
22	ECO 1460 R240 ADDED. IL 23.5.83
23	ECO 1512 R241 ADDED UK 12-8-83

DRAWN	CHECKED	DIMENSIONS IN	TOLERANCES	MATERIAL
B.J.		MILLIMETRES	INCH DIMENSIONS: DECIMAL TO 3 PLACES ± .005; DECIMAL TO 2 PLACES ± .010; FRACTIONAL ± 1/64; METRIC DIMENSIONS: DECIMAL TO 2 PLACES ± .1mm; DECIMAL TO 1 PLACE ± .2mm; WHOLE DIMENSION ± 4mm; UNLESS OTHERWISE STATED; ANGULAR ±½°	
TRACED	APPROVED	SCALE 2:1 NOT TO BE SCALED		FINISH
DATE 12-7-78	DATE			

datron ELECTRONICS LTD. NORWICH.

TITLE: 1071 ANALOGUE PCB ASSEMBLY

DRAWING No. 400299

DRAWING SIZE A1

SHEET 1 OF 24

DRAWING No. 430299

FIRST USED ON 1071.

THIRD ANGLE PROJECTION

DRAWN IN ACCORDANCE WITH BS 308

ALL BURRS TO BE REMOVED

NOTES

= SIGNAL COMMONS

= ANALOGUE COMMON

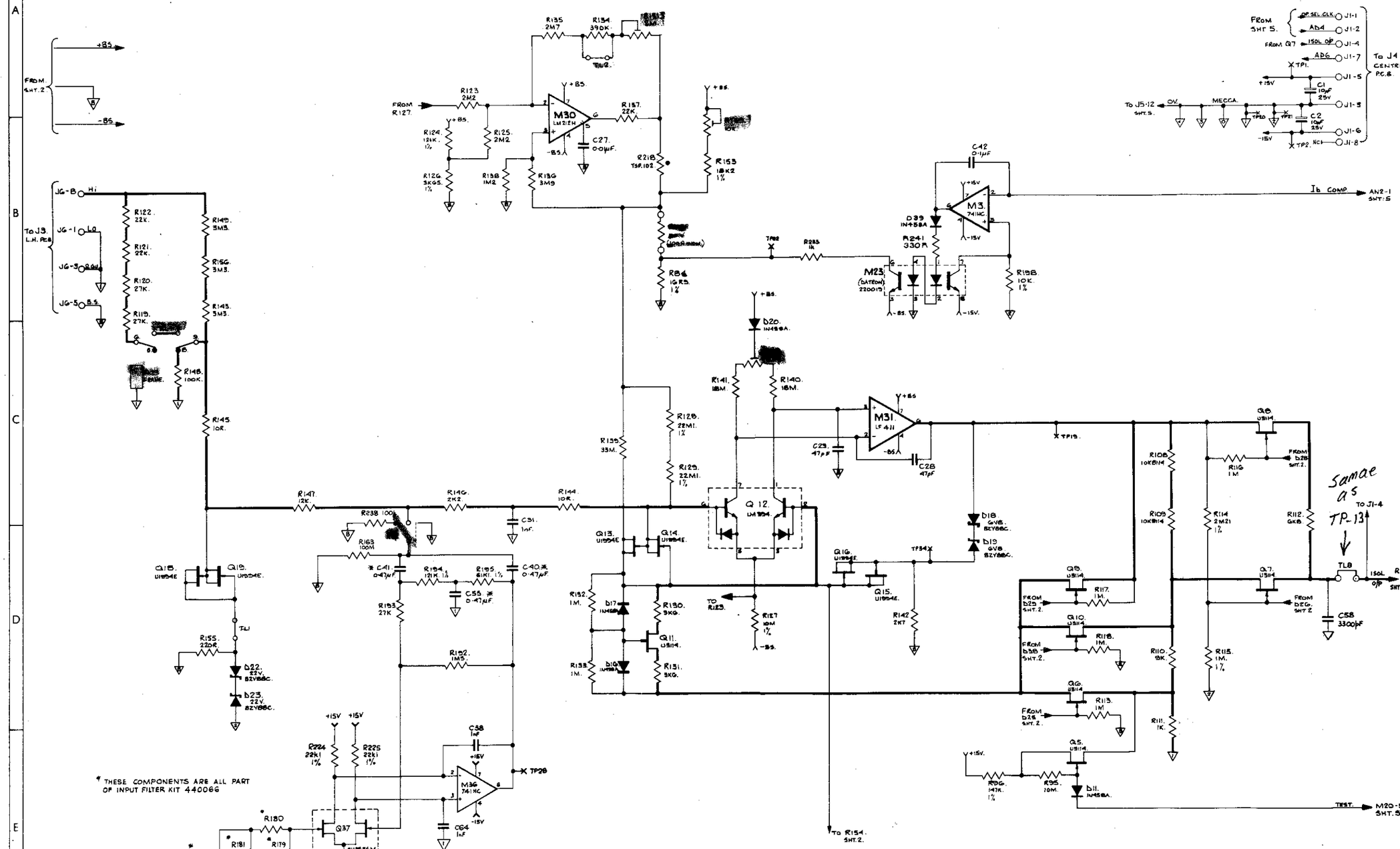

ISS.	CHANGES
3	RE-DRAWN. 15-4-75. ECO 826, 834 & 835. ECO 833.
4	SEE SHEETS 2 & 3
5	SEE SHEETS 3 & 5.
6	ECO.959 SEE SHT. 5 IL 26.9.75
7	ECO 988. C30 DELETED. ECO 993 M36 WAS MA714. B.J. 13-10-79
8	ECO 983, 997. R127 WAS 10M (5410006) (SHT 1) R220, 221 & 222 (SHT 4) WERE 1M. R219 WAS 1M R217 - 47K (SHT 3) C60 ADDED R227 " B.J. 29-10-79
9	ECO.1032 SEE SHEET 3 IL 18.8.80
10	ECO.1049 R123, R125 WERE 2M37 1%. R134 WAS 470k R135 WAS 3M92 1% R136 WAS 4M75 1% R138 WAS 1M82 1% IL 27.2.80
11	ECO. 1098 R217.4 LINK 'G' DELETED IL 16.4.80
12	ECO. 1117. 1126 SEE SHEETS 2 + 3 IL 2.6.80
13	ECO. 1184. 1187. 1188. 1190 R150 WAS 100K J1-8 WAS GU. J1-7 ADDED. SEE ALSO SHTS 3 & 4. IL 16.12.80
14	ECO.1244. 1247 SEE SHTS. 3 + 4. IL 3.11.81
15	ECO 1273 R27 WAS A CR25 JR 7.1.82
16	ECO.1284. 1362 R224-R226, R238 R239 C64 + Q37 ADDED. IL 28.5.82
17	ECO.1460 R240 ADDED, SHT 2 IL 25.5.83
18	ECO 1512 R241 ADDED. JR 12.8.83.

DRAWN B.J.	CHECKED	DIMENSIONS IN MILLIMETRES	TOLERANCES ANGULAR ± INCH DIMENSIONS DECIMAL TO 3 PLACES ± .005 DECIMAL TO 2 PLACES ± .010 FRACTIONAL ± 1/64 METRIC DIMENSIONS DECIMAL TO 2 PLACES ± 1mm DECIMAL TO 1 PLACE ± 2mm WHOLE DIMENSIONS ± 4mm UNLESS OTHERWISE STATED
TRACED	APPROVED	SCALE NOT TO BE SCALED	
DATE 9-4-75.	DATE		

MATERIAL ——

FINISH ——

datron ELECTRONICS LTD. NORWICH.

TITLE D.C. ISOLATOR. 1071.

DRAWING SIZE A1

DRAWING No. 430299

SHEET 1 OF 5

DRAWING No. 430299.

FIRST USED ON 1071

THIRD ANGLE PROJECTION

DRAWN IN ACCORDANCE WITH BS 308

ALL BURRS TO BE REMOVED

NOTES

RANGE	FET CONTROL LINE. TP.23	TP.24	TP.25	TP.26	TP.27
100mV	1	0	1	0	0
1V	0	0	1	0	1
10V	0	1	0	1	0
100V	0	0	1	0	1
1000V	0	1	0	1	0
DC	0	0	0	1	0

LOGIC '1' = FET ON.
" '0' = FET OFF.

RANGE	INPUT CONTROL LINE. LD7	LD6	LD5	LD4
100mV	X	1	1	0
1V	X	1	1	1
10V	X	1	0	1
100V	X	0	1	1
1000V	X	0	0	1
DC	1	0	0	0
FILTER.	1	X	X	X

LOGIC '1' = 0V.
" '0' = −15V

ISS.	CHANGES
3	RE-DRAWN. 15-4-79. ECO 826, 834 & 835. B.J. ECO 855.
	D57 DELETED.
4	ECO. 886/922 20.6.79 IL
5	SEE SHEETS 3 & 5.
6	SEE SHEET 5
7	ECO 963. R182.4 1.8K W/ERE 10K. BJ. 12-10-79.
8	ECO 983 & 997 B.J. SHT 1. 29-10-79
9	SEE SHEET 3
10	ECO. 1072 C51 WAS 2n2F C53 WAS 10nF C54 WAS 10nF IL 27.2.80
11	SEE SHEETS 1, 3 & 5
12	ECO. 1117 D68 ADDED IL 2.6.80
13	SEE SHTS 1, 3 & 4
14	SEE SHEETS 3 & 4
15	ECO 1273 SEE SHEET 1 UK 7-1-82
16	ECO. 1284 SEE SHTS. 1, 3, 4 & 5 IL 28.5.82
17	ECO. 1460 R240 ADDED IL 25.5.83
18	SEE SHEET 1

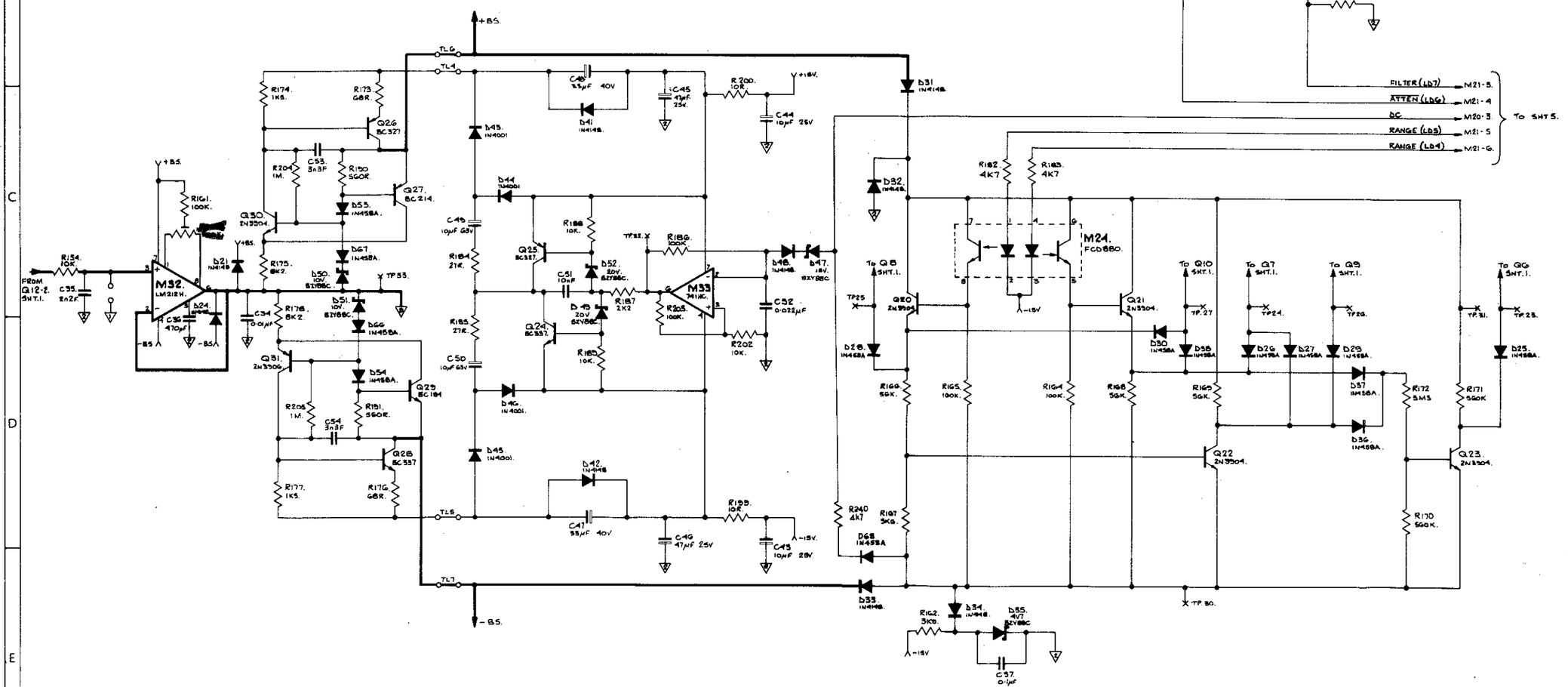

DRAWN	CHECKED	DIMENSIONS IN	TOLERANCES	MATERIAL
B. J.		MILLIMETRES	INCH DIMENSIONS: DECIMAL TO 3 PLACES ± .005; DECIMAL TO 2 PLACES ± .010; FRACTIONAL ± 1/64; METRIC DIMENSIONS: DECIMAL TO 3 PLACES ± 1mm; DECIMAL TO 1 PLACE ± 2mm; WHOLE DIMENSIONS ± 4mm; UNLESS OTHERWISE STATED; ANGULAR ± ½°	—
TRACED	APPROVED	SCALE		FINISH
				—
DATE 17-4-79.	DATE	NOT TO BE SCALED		

datron ELECTRONICS LTD. NORWICH.

TITLE: BOOT STRAPPED SUPPLIES & RANGE LOGIC. 1071.

DRAWING SIZE: A1

DRAWING No. 430299.

SHEET 2 OF 5

DRAWING No. 430299

FIRST USED ON 1071

THIRD ANGLE PROJECTION

DRAWN IN ACCORDANCE WITH BS 308

ALL BURRS TO BE REMOVED

NOTES

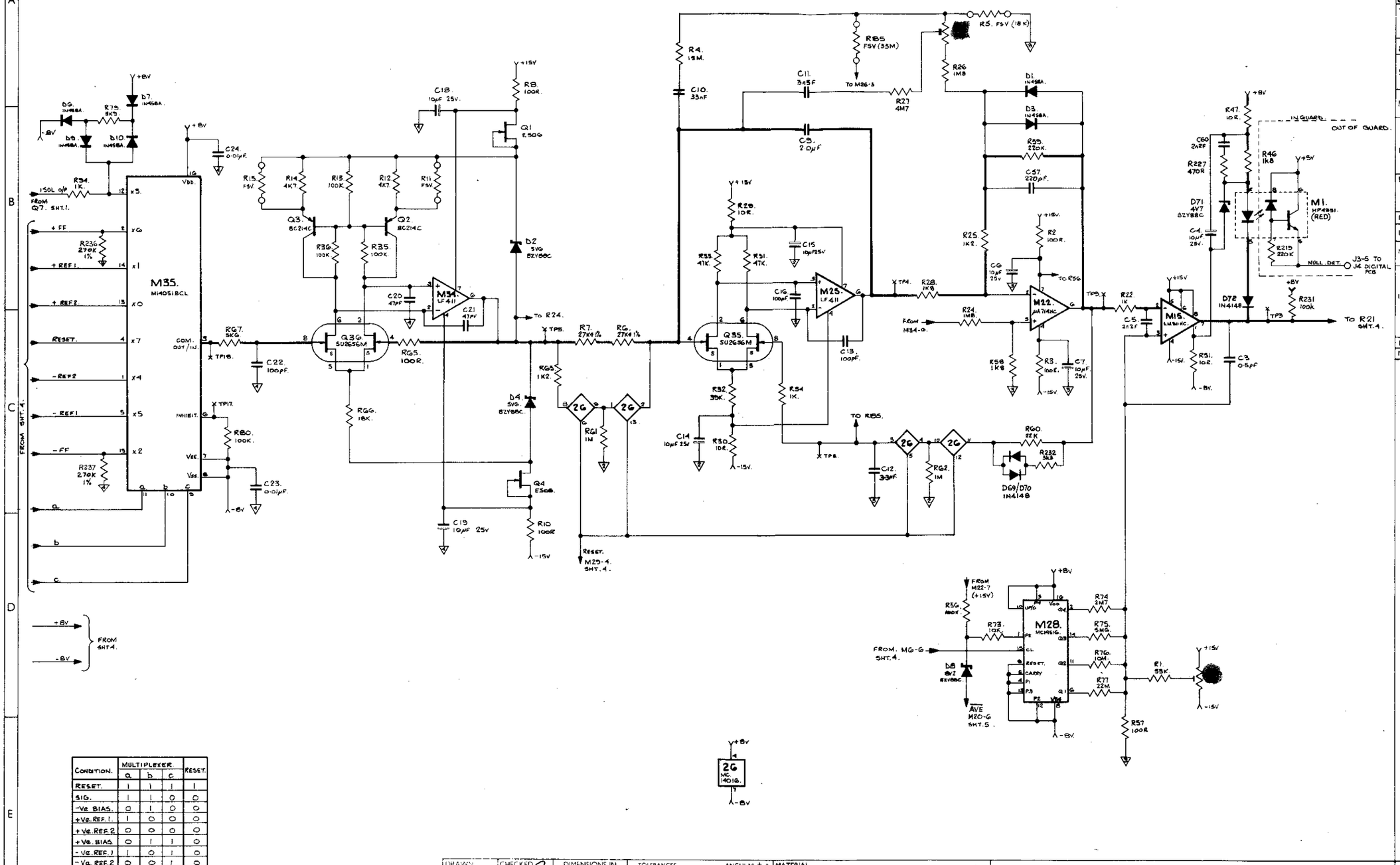

CONDITION.	MULTIPLEXER. a	b	c	RESET.
RESET.	1	1	1	1
SIG.	1	1	0	0
-Ve. BIAS.	0	1	0	0
+Ve. REF. 1.	1	0	0	0
+Ve. REF. 2.	0	0	0	0
+Ve. BIAS.	0	1	1	0
-Ve. REF. 1.	1	0	1	0
-Ve. REF. 2.	0	0	1	0

ISS.	CHANGES
3	RE-DRAWN. 19-4-79 ECO 826, 854 & 855. B.J.
4	R27 WAS 3M3 ECO. 922. 20.6.79 B.J.
5	ECO 915. C5 WAS 140018 NOW 140057. ECO 826. R60 WAS 220K NOW 22K. B.J. 16-7-79.
6	SEE SHEET 3
7	ECO 968. C12 WAS 2·2μF R65 WAS 1KΩ B.J. 12-10-79
8	ECO 985 & 997. B.J. SEE SHT 1 25-10-79
9	C8 DELETED. C57 WAS 470pF. R58 WAS 2K7. ECO. 1032 18.1.80
10	Q2 Q3 WERE BC214 R13 WAS 82K. ECO 1075 27.2.80
11	ECO 1098. 1101 R46 WAS 1K5 D58 DELETED & REPLACED WITH LK3. R27 WAS 1M5 16.4.80
12	ECO. 1126 R63 WAS 2K2 R232 & D69/D70 ADDED ACROSS R60 18.6.80
13	R236 & R237 ADDED
14	M1 NOW SELECTED SEE ALSO SHEET 4
15	ECO 1273 SEE SHEET 1 OR 7/1/81
16	ECO 1284 1362. D71 D72 ADDED. R25 WAS 2M2 POT R26 WAS 2M2 R27 WAS 680K R231 ADDED. R5 WAS NOM. 33K. 26.5.82 R6 & R7 WERE 22K1 R236 " 2K2 R236 & R237 " 560K
17	SEE SHEET 2
18	SEE SHEET 1

DRAWN B.J	CHECKED DEG	DIMENSIONS IN MILLIMETRES	TOLERANCES ANGULAR ± ° INCH DIMENSIONS DECIMAL TO 3 PLACES ± .005 DECIMAL TO 2 PLACES ± .010 FRACTIONAL ± 1/64 METRIC DIMENSIONS DECIMAL TO 2 PLACES ± 1mm DECIMAL TO 1 PLACE ± 2mm WHOLE DIMENSIONS ± 4mm UNLESS OTHERWISE STATED
TRACED	APPROVED	SCALE NOT TO BE SCALED	MATERIAL — FINISH —
DATE 11-4-79	DATE		

datron ELECTRONICS LTD. NORWICH.

TITLE A-D CONVERTOR. 1071.

DRAWING SIZE A1

DRAWING No. 430299

SHEET 3 OF 5

DRAWING No. 430299.

FIRST USED ON 1071

THIRD ANGLE PROJECTION

DRAWN IN ACCORDANCE WITH BS 308

ALL BURRS TO BE REMOVED

NOTES

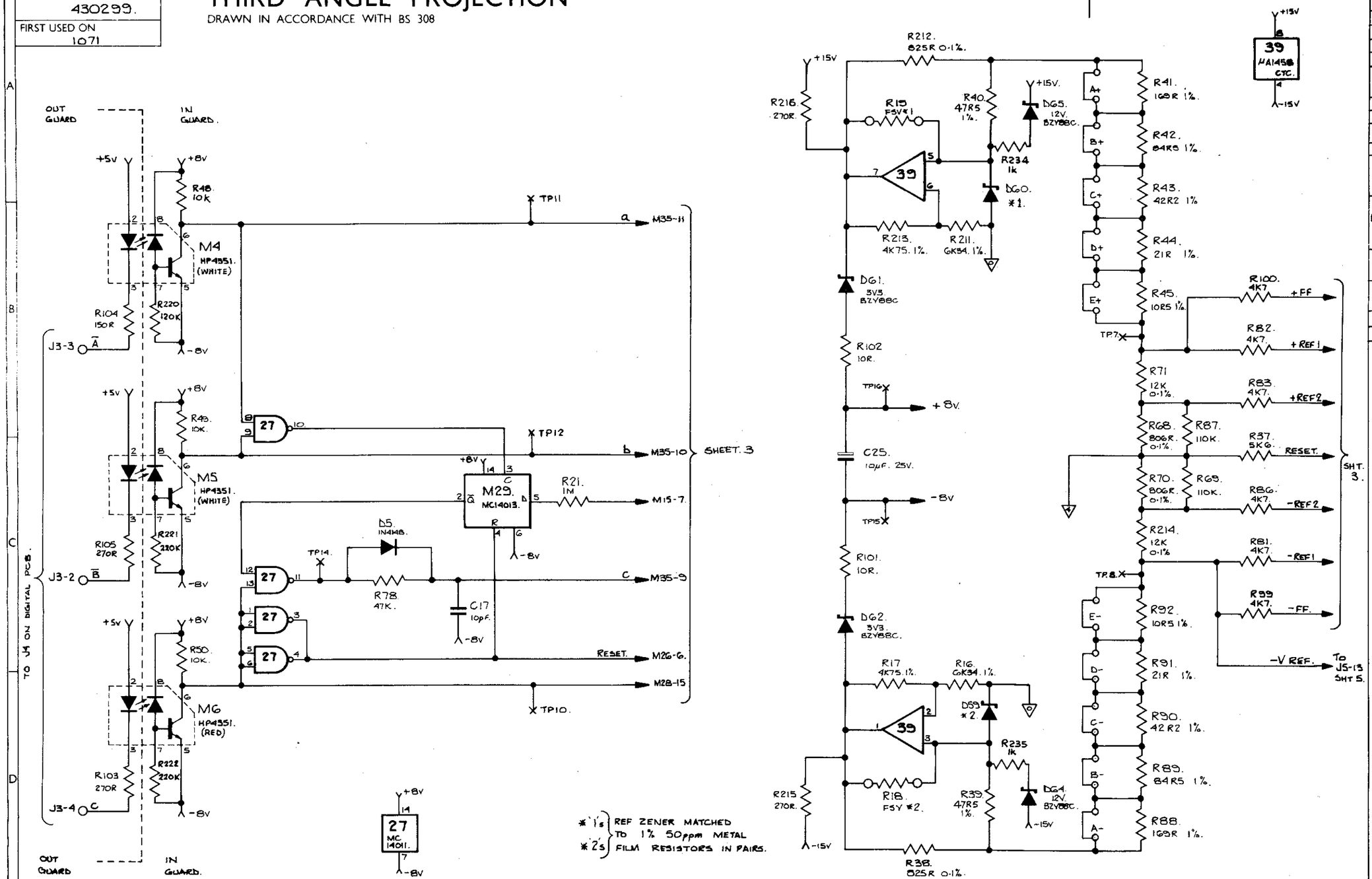

ISS.	CHANGES
3	RE-DRAWN B.J. 15-4-79. ECO 826, 834 & ECO 853.
4	SEE SHEETS 2+3
5	SEE SHEETS 3+5.
6	SEE SHEET 5
7	SEE SHEETS 1,2+3
8	ECO 987 & 997. SEE SHT 1. B.J. 29-10-79
9	SEE SHEET 3
10	SEE SHEET 3
11	SEE SHEETS 1, 3 AND 5
12	SEE SHEET 2
13	R48 WAS 5K6 R105 WAS 150R R220 WAS 220k IL 16.12.80
14	M4-M6 SELECTED R39, R40 WERE 24R3. SEE ALSO SHT. 3 IL 3.11.81
15	ECO 1273 SEE SHEET 1 VR 7·1·82
16	ECO 1284 R234/R235 ADDED IL 28.5.82
17	SEE SHEET 2
18	SEE SHEET 2

DRAWN B.J.	CHECKED	DIMENSIONS IN MILLIMETRES	TOLERANCES ANGULAR ± ½° INCH DIMENSIONS DECIMAL TO 3 PLACES ± .005 DECIMAL TO 2 PLACES ± .010 FRACTIONAL ± 1/64 METRIC DIMENSIONS DECIMAL TO 2 PLACES ± 1mm DECIMAL TO 1 PLACE ± 2mm WHOLE DIMENSIONS ± 4mm UNLESS OTHERWISE STATED	MATERIAL	datron ELECTRONICS LTD. NORWICH.
TRACED	APPROVED			FINISH	TITLE A-D CONTROL & REFERENCES. 1071.
DATE 6-4-79.	DATE	SCALE NOT TO BE SCALED			DRAWING No. 430299.

DRAWING SIZE A2

SHEET 4 OF 5

IW.1142

DRAWING No. 430299.

FIRST USED ON 1071

THIRD ANGLE PROJECTION

DRAWN IN ACCORDANCE WITH BS 308

ALL BURRS TO BE REMOVED

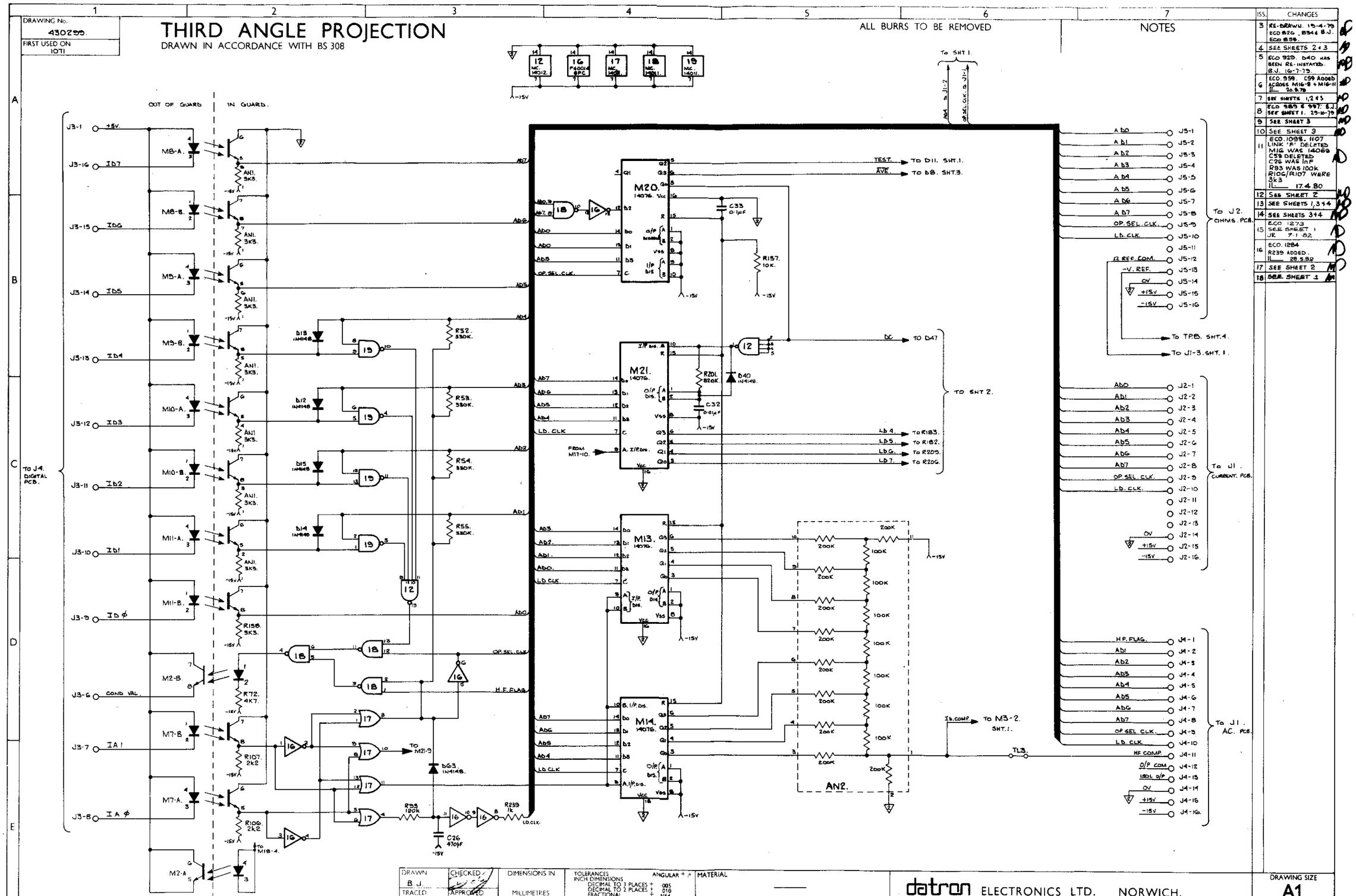

ISS.	CHANGES
3	RE-DRAWN. 15-4-79 ECO 826, B544 B.J. ECO 838.
4	SEE SHEETS 2 & 3
5	ECO 929. D40 HAS BEEN RE-INSTATED. B.J. 16-7-79.
6	ECO. 959. C59 ADDED ACC0055 M16-8 + M16-11 IL 20.8.79
7	SEE SHEETS 1,2 & 3
8	ECO 989 & 997. B.J. SEE SHEET 1. 25-10-79
9	SEE SHEET 3
10	SEE SHEET 3
11	ECO. 1098. 1107 LINK 'F' DELETED M16 WAS 14069 C59 DELETED C26 WAS 1nF R93 WAS 100k R106/R107 WERE 3k3 IL 17.4.80
12	SEE SHEET 2
13	SEE SHEETS 1,3 & 4
14	SEE SHEETS 3 & 4
15	ECO 1273 SEE SHEET 1 JR 7.1.82
16	ECO. 1284 R239 ADDED. IL 28.5.82
17	SEE SHEET 2
18	SEE SHEET 1

DRAWN B.J.	CHECKED	DIMENSIONS IN MILLIMETRES	TOLERANCES INCH DIMENSIONS DECIMAL TO 3 PLACES ± .005; DECIMAL TO 2 PLACES ± .010; FRACTIONAL ± 1/64; METRIC DIMENSIONS DECIMAL TO 2 PLACES ± 1mm; DECIMAL TO 1 PLACE ± 2mm; WHOLE DIMENSIONS ± 4mm; UNLESS OTHERWISE STATED; ANGULAR ± ½
TRACED	APPROVED	SCALE NOT TO BE SCALED	MATERIAL —
DATE 18-4-79	DATE		FINISH —

datron ELECTRONICS LTD. NORWICH.

TITLE: ANALOGUE INTERFACE LOGIC.

DRAWING SIZE A1

DRAWING No. 430299

SHEET 5 OF 5.

DRAWING No.	USED ON
400300	1071

THIRD ANGLE PROJECTION

DRAWN IN ACCORDANCE WITH BS 308

ALL BURRS TO BE REMOVED

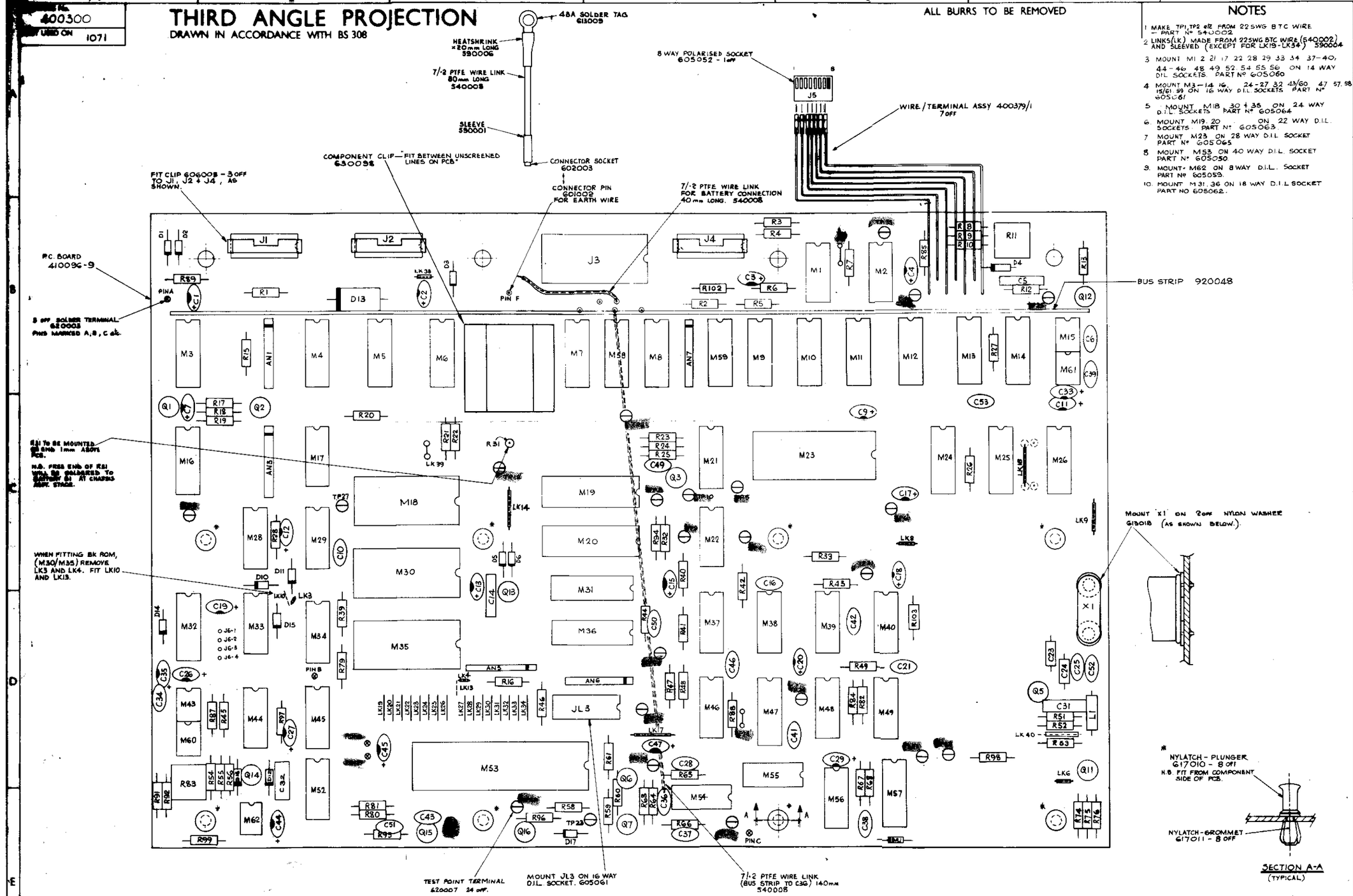

NOTES

1. MAKE TP1, TP2 etc. FROM 22 SWG B.T.C. WIRE — PART Nº 540002.
2. LINKS (LK) MADE FROM 22 SWG B.T.C. WIRE (540002) AND SLEEVED (EXCEPT FOR LK19-LK34) 590004
3. MOUNT M1 2 21 17 22 28 29 33 34 37-40, 44-46 48 49 52 54 55 56 ON 14 WAY D.I.L. SOCKETS. PART Nº 605060
4. MOUNT M3-14 16, 24-27 32 43/60 47 57 58 15/61 59 ON 16 WAY D.I.L. SOCKETS. PART Nº 605061
5. MOUNT M18 30 & 35 ON 24 WAY D.I.L. SOCKETS PART Nº 605064
6. MOUNT M19, 20 ON 22 WAY D.I.L. SOCKETS PART Nº 605063
7. MOUNT M23 ON 28 WAY D.I.L. SOCKET PART Nº 605065
8. MOUNT M53 ON 40 WAY D.I.L. SOCKET PART Nº 605050
9. MOUNT M62 ON 8 WAY D.I.L. SOCKET PART Nº 605050.
10. MOUNT M31, 36 ON 18 WAY D.I.L. SOCKET PART NO 605062.

ISS.	CHANGES
A	
1	RELEASED TO PRODN 26.11.78
2	ECO 811 4.1.79 155.4 PCB UPDATE IL
3	ECO 835/852 155.5 PCB UPDATE - SEE ECO'S FOR FULL DETAILS IL 17.4.79
4	ECO 863/872/896 904/905/911/912. PARTS LIST CHANGES IL 19.6.79
5	C53 ADDED. Pts. LT CHANGE TO R95 ECO 928 17.9.79 IL
6	ECO. 941 PTS. LT. CHANGE TO R2 IL 4.9.79
7	ECO. 939/961/980/1004 PTS. LT. CHANGE IL 28.10.79
8	ECO's 988.1000.1028 1032.1045.1047 155.6 PCB UPDATE SEE ECO's FOR FULL DETAILS IL 4.1.80
9	ECO. 1059 PARTS LIST CHANGE ONLY IL 23.1.80
10	ECO. 1044.1091.1082 PCB UPDATE TO 155.7A PARTS LIST CHANGES IL 20.3.80
11	ECO. 1108 R103 ADDED. PARTS LIST CHANGES IL 18.4.80
12	ECO. 1132 PARTS LIST CHANGE TO C36 2 STEATITE BEADS ADDED TO SUPPORT C36 IL 18.6.80
13	ECO 1142.1187.1140 C32 CONNECTED TO R55/R56. PARTS LIST CHANGES TO M30 & M35 + SIGN ADDED TO TANT. CAPS. IL 28.7.80
14	ECO 1147 D21 ADDED IL 30.8.80
15	ECO 1188 R23 WAS 1K - PARTS LIST CHANGE IL 6.1.81
16	ECO 1214 PCB UPDATED TO 6B PARTS LIST CHANGES LK 39 + LK 40 ADDED. JR 11-6-81
17	ECO 1241 Nº OF 24 WAY SKTS WAS 3 IL 4.11.81
18	ECO 1243.1251.1283 R36 WAS 100K R46 WAS 330K M31,36 WERE 28 PIN 256 x 4 BIT RAM. PCB WAS 155 6B. LK 36 ADDED. JR 2.12.81
19	ECO 1320 WIRE FROM J5-8 MOVED. NO PARTS LIST CHANGE. JR 12.5.82
20	ECO 1313 M30 AND 35 CHANGED FROM 1959-17 (10-16 NOT RELEASED) M16 ADDED. JR 12.7.82
21	ECO. 1381 M18, M30 & M35 WERE ISSUE 17. IL 28.9.82
22	ECO. 1414 NYLON WASHERS ADDED. 15mm OUT DIA
23	ECO 1451 M18, M30 & M35 WERE ISSUE 17A IL 31.3.83.
24	ECO. 1461 EARTH WIRE ADDED. LINK (DIG. OPM. LOW IMPEDANCE) BETWEEN BUS STRIP & C36 ADDED IL 31.5.83

DRAWN	CHECKED	DIMENSIONS IN	TOLERANCES	MATERIAL
IL	P.R.H.	MILLIMETRES	INCH DIMENSIONS: DECIMAL TO 3 PLACES ± .005; DECIMAL TO 2 PLACES ± .010; FRACTIONAL ± 1/64; ANGULAR ± 1°	
TRACED	APPROVED	SCALE 2:1	METRIC DIMENSIONS: DECIMAL TO 2 PLACES ± 1mm; DECIMAL TO 1 PLACE ± 2mm; WHOLE DIMENSIONS ± 4mm	FINISH
DATE 26.6.78	DATE	NOT TO BE SCALED	UNLESS OTHERWISE STATED	

datron ELECTRONICS LTD. NORWICH.

TITLE 1071 DIGITAL PCB. ASSY.

DRAWING No. 400300

DRAWING SIZE A1

DRAWING No. 430300

FIRST USED ON

THIRD ANGLE PROJECTION

DRAWN IN ACCORDANCE WITH BS 308

ALL BURRS TO BE REMOVED

NOTES

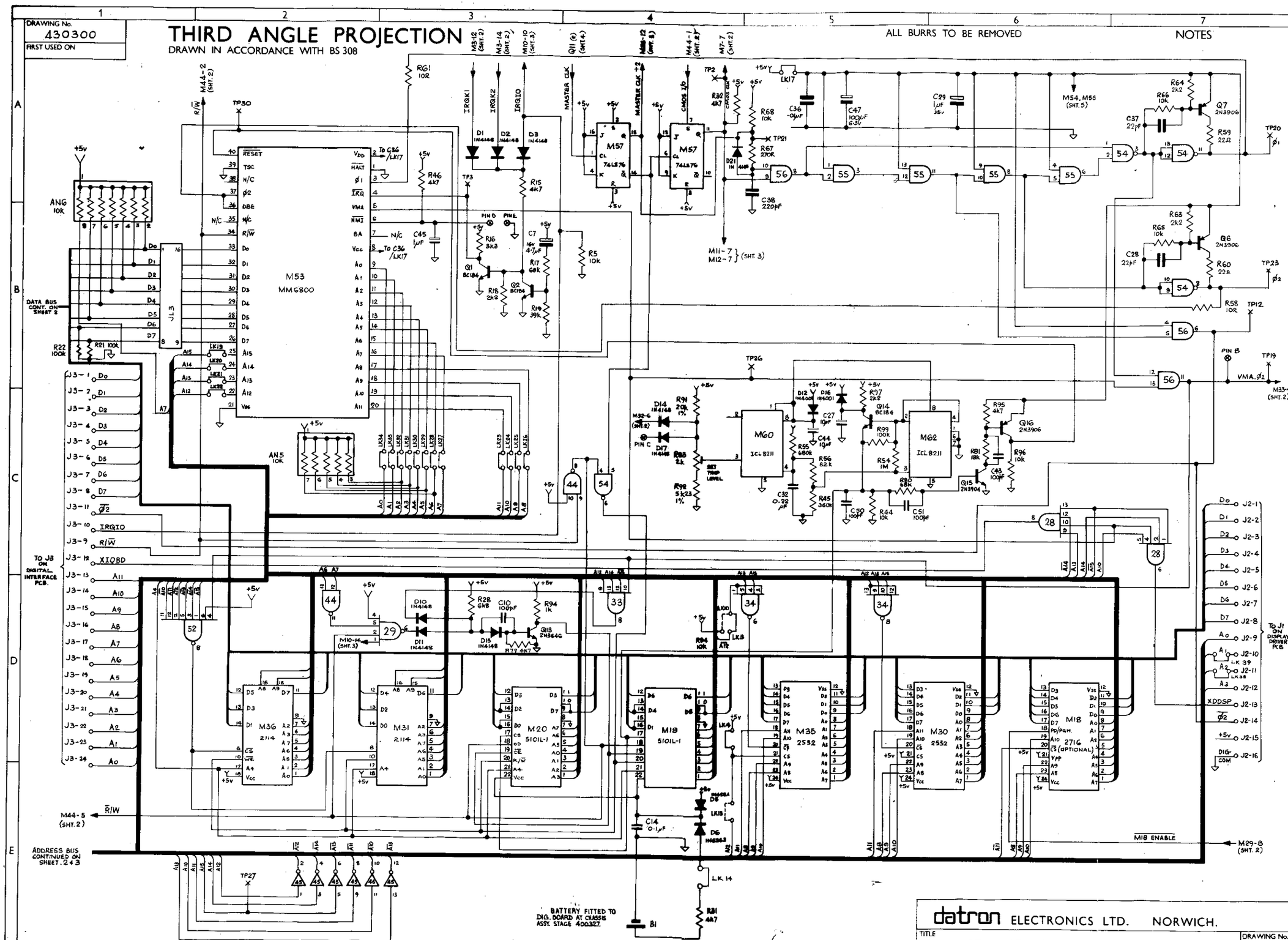

ISS.	CHANGES
A	
1	RELEASED TO PRODN 24.11.78
2	ECO 811 PCB UPDATE TO 1554 IL 8.1.79
3	153.5 UPDATE TO PCB. ECO 836/852 IL 4.4.79
4	ECO 912/911/863 R91 WAS 100K R92 WAS 27K. R83 WAS 10K LK17 WAS R62 (0.47R) IL 19.6.79
5	ECO 928 17.7.79 SEE SHT. 3
6	ECO. 941 4.9.79 SEE SHEET 3
7	ECO 1004 R86 DELETED. (SHT3) 29.10.79
8	ECO. 998 JL1-JL2 REMOVED & REPLACED WITH WIRE LINKS. S2-S3 REMOVED R67 REMOVED BATTERY ASSY NOW OBSOLETE J7 & LK14 DELETED. TP30 ADDED. SEE ALSO SHTS 2-4 IL 8.1.80
9	ECO. 1046 + 1092 SEE SHEET 3 + 5 IL 24.3.80
10	ECO. 1108 R15 WAS 22K R16 WAS 10K IL 18.4.80
11	ECO. 1182 C32 WAS 0.068 μF. IL 18.6.80
12	ECO. 1147. D21 ADDED IL 30.9.80
13	ECO. 1198 SEE SHEET 3. IL 6.1.81
14	ECO 1214 LK.39 ADDED JR 12.6.81
15	ECO 1243, 1251 PCB WAS 195.85 R.56 WAS 100K R.45 WAS 330K M31, 36 WERE 256 x 4 BIT RAMS LK 38 ADDED JR 2.12.81

datron ELECTRONICS LTD. NORWICH.

TITLE: 1071 MPU & MEMORY CIRCUIT

DRAWING SIZE: A1

DRAWING No. 430300

SHEET 1 OF 5

DRAWING No. 430300

FIRST USED ON

THIRD ANGLE PROJECTION

DRAWN IN ACCORDANCE WITH BS 308

ALL BURRS TO BE REMOVED

NOTES

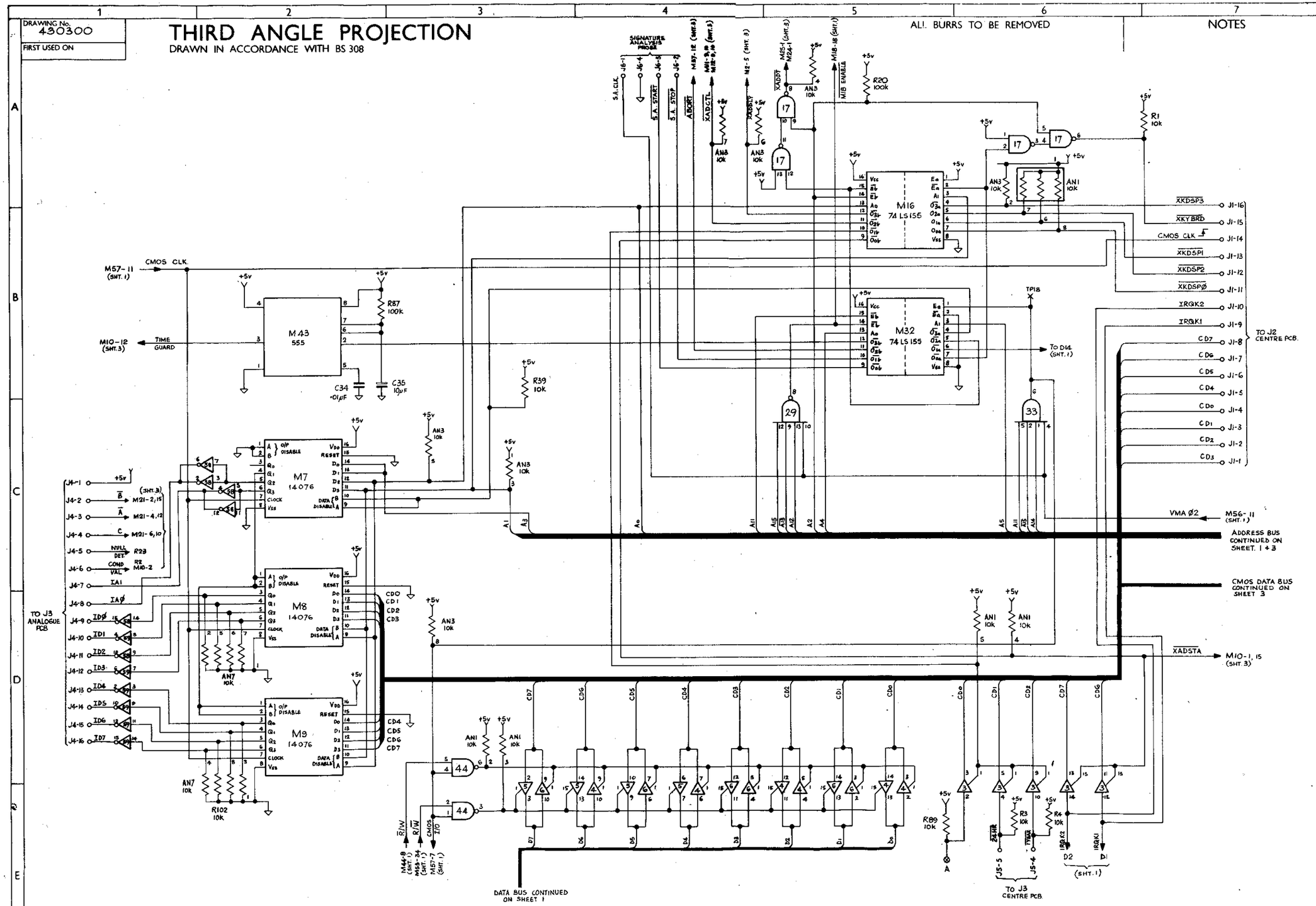

ISS.	CHANGES
A	
1	RELEASED TO PRODN 24.11.78
2	ECO 811 PCB. UPDATE TO 155. IL. 8.1.79
3	155.5 UPDATE TO PCB 7 ECO 936 IL. 4-4-79
4	SEE SHEETS 1+3
5	SEE SHEET 3
6	SEE SHEET 3
7	SEE SHEET 3
8	ECO 988 S1. + LK16-LK18 DELETED. AN7, R102 ADDED. IL. 8.1.80
9	SEE SHEET 3+5 IL. 24.3.80
10	SEE SHEETS 1,3+5 IL. 15.4.80
11	SEE SHEET 1
12	SEE SHEET 1
13	SEE SHEET 3
14	ECO 1214 IAØ AND IA1 DRIVES INCREASED. JC 17.6.81
15	ECO 1243, 1251 SEE SHEET 1

DRAWN IL	CHECKED P.R.H.	DIMENSIONS IN MILLIMETRES	TOLERANCES ANGULAR ± ° INCH DIMENSIONS DECIMAL TO 3 PLACES ± ·005 DECIMAL TO 2 PLACES ± ·010 FRACTIONAL ± 1/64 METRIC DIMENSIONS DECIMAL TO 2 PLACES ± 1mm DECIMAL TO 1 PLACE ± 2mm WHOLE DIMENSIONS ± 4mm UNLESS OTHERWISE STATED
TRACED	APPROVED	SCALE —	MATERIAL —
DATE 13.9.78	DATE	NOT TO BE SCALED	FINISH —

datron ELECTRONICS LTD. NORWICH.

TITLE 1071 CMOS ADDRESS DECODE + I/O CIRCUIT

DRAWING SIZE A1

DRAWING No. 430300

SHEET 2 OF 5

DRAWING No. 430300

FIRST USED ON

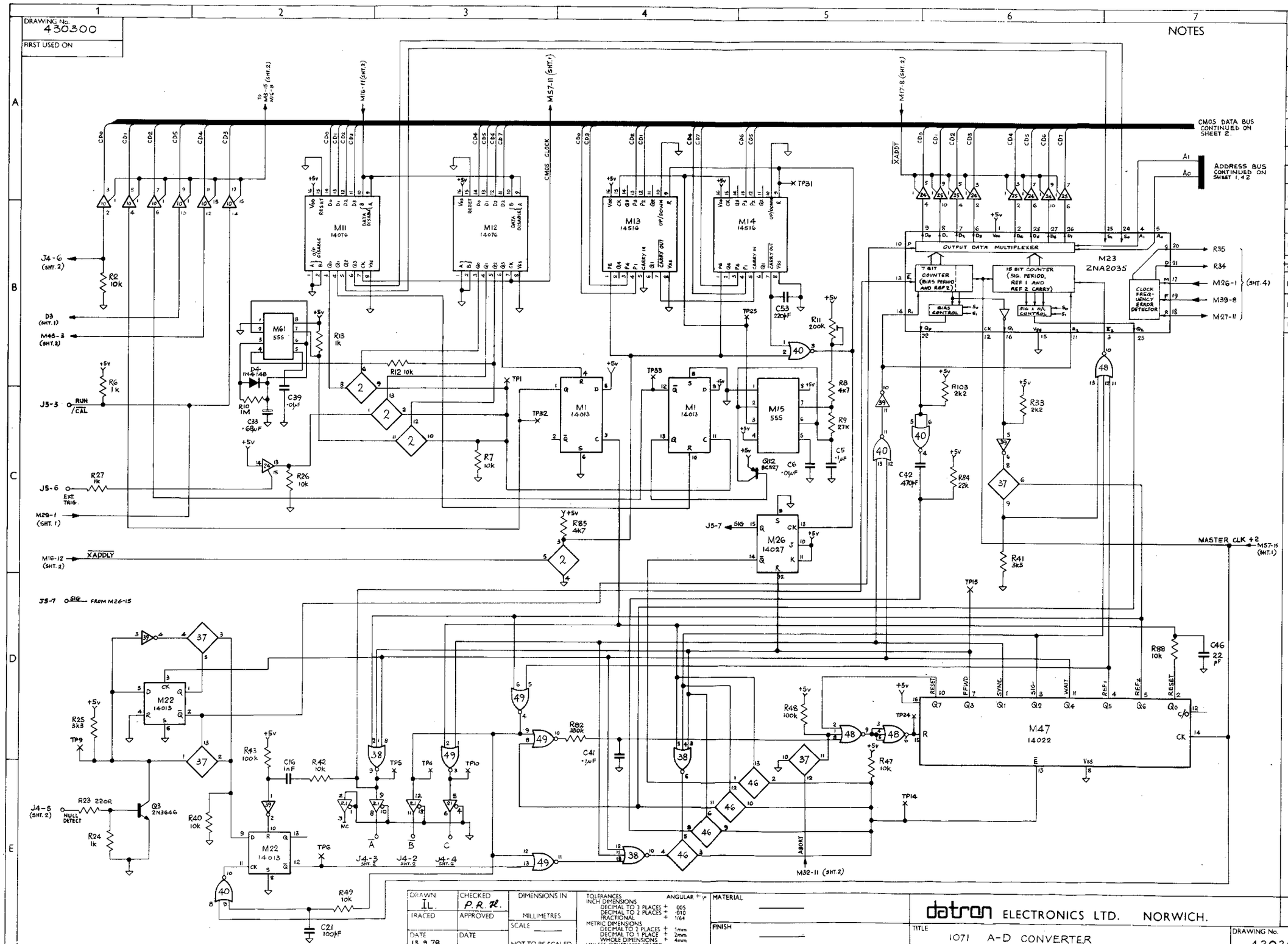

NOTES

ISS	CHANGES
A	
1	RELEASED TO PROD^N 24.11.78
2	ECO 811 PCB UPDATE TO ISS 4 IL 8.1.79
3	Q3 WAS BC184 ECO 825 ISS.5 UPDATE TO PCB. ECO.852 4-4-79 IL
4	ECO 886 R10 WAS 680K. 19.6.79 IL
5	ECO.928 CS3 ADDED R86 WAS 10K 17.7.79 IL
6	ECO.941 PTL LT. CHANGE TO R2 IL 4.9.79
7	ECO 1004 R86 DELETED IL 29.10.79
8	ECO.998 D18/D19 DELETED TP31-TP33 ADDED IL 8.1.80
9	ECO. 1092 R33 WAS 4K7 R41 WAS 10K IL 24.3.80
10	ECO. 1108 R103 ADDED IL 18.4.80
11	SEE SHEET 1
12	SEE SHEET 1
13	ECO 1188 R23 WAS 1K. IL 8.1.81
14	ECO 1214 M.2: WAS MC14050BCP JK 12.6.81
15	ECO 1243, 1251 SEE SHEET 1

DRAWN	CHECKED	DIMENSIONS IN	TOLERANCES INCH DIMENSIONS: DECIMAL TO 3 PLACES ± .005; DECIMAL TO 2 PLACES ± .010; FRACTIONAL ± 1/64; METRIC DIMENSIONS: DECIMAL TO 2 PLACES ± 1mm; DECIMAL TO 1 PLACE ± 2mm; WHOLE DIMENSIONS ± 4mm; UNLESS OTHERWISE STATED; ANGULAR ± 1°	MATERIAL	datron ELECTRONICS LTD. NORWICH.	DRAWING SIZE
IL.	P.R.H.	MILLIMETRES		FINISH	TITLE 1071 A-D CONVERTER	A1
TRACED	APPROVED	SCALE			DRAWING No. 430300	SHEET 3 OF 5
DATE 13.9.78	DATE	NOT TO BE SCALED				

DRAWING No. 430300

FIRST USED ON 1071

THIRD ANGLE PROJECTION

DRAWN IN ACCORDANCE WITH BS 308

ALL BURRS TO BE REMOVED

NOTES

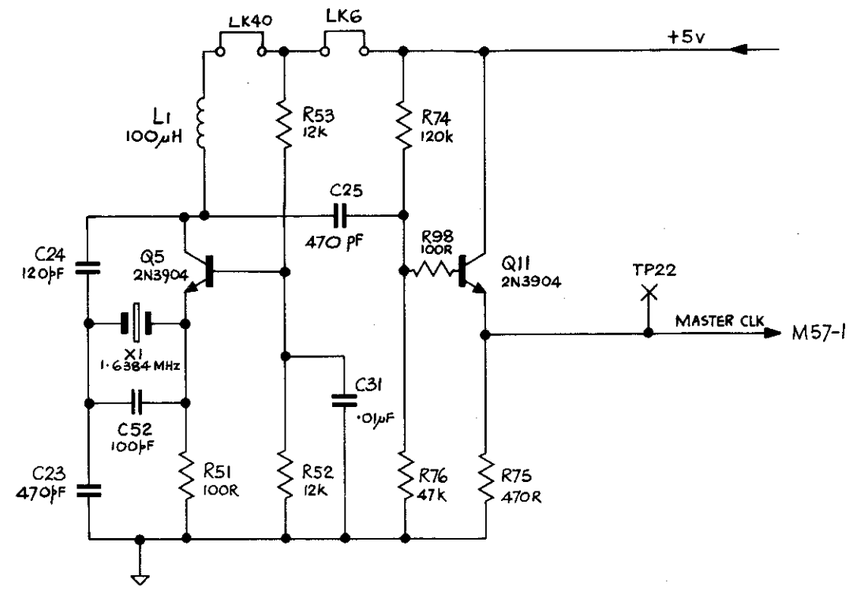

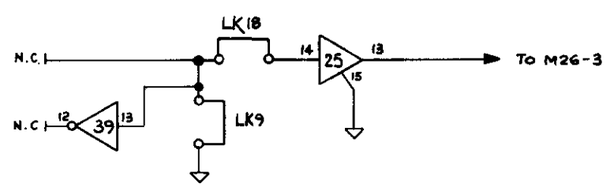

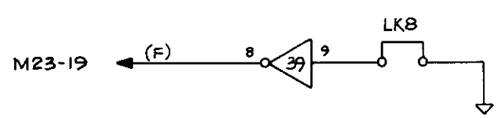

ISS.	CHANGES	
A		
1	RELEASED TO PRODUCTION 24.11.78	
2	ECO 811 PCB UPDATE TO ISSUE 4 IL 8.1.79	
3	ISS.5 UPDATE TO ISS. ECO 835/852 IL 4-4-79	
4	SEE SHEETS 1+3	
5	SEE SHEET 3	
6	SEE SHEET 3	
7	SEE SHEET 3	
8	ECO 958. MPS PINS 14 & 13 WERE M39 PINS 13 & 12 RESP. LK18 ADDED. IL 8.1.80	
9	SEE SHEET 3+5	
10	SEE SHEETS 1, 3 AND 5 IL 18.4.80	
11	SEE SHEET 1	
12	SEE SHEET 1	
13	SEE SHEET 3	
14	ECO 1214 LK 40 ADDED JR 12·6·81	
15	ECO 1243, 1251 SEE SHEET 1	

DRAWN IL.	CHECKED P.R.H.	DIMENSIONS IN MILLIMETRES	TOLERANCES ANGULAR ± ½° INCH DIMENSIONS DECIMAL TO 3 PLACES ± ·005 DECIMAL TO 2 PLACES ± ·010 FRACTIONAL ± 1/64 METRIC DIMENSIONS DECIMAL TO 2 PLACES ± 1mm DECIMAL TO 1 PLACE ± 2mm WHOLE DIMENSIONS ± 4mm UNLESS OTHERWISE STATED	MATERIAL	DRAWING SIZE A2
TRACED	APPROVED	SCALE		FINISH	
DATE 10. 10. 78	DATE	NOT TO BE SCALED			

datron ELECTRONICS LTD. NORWICH.

TITLE 1071 1·6 MHz CLOCK CIRCUIT

DRAWING No. 430300

SHEET 4 OF 5

I.W.1162

DRAWING No.
430300
FIRST USED ON 1071

THIRD ANGLE PROJECTION

DRAWN IN ACCORDANCE WITH BS 308

ALL BURRS TO BE REMOVED

NOTES

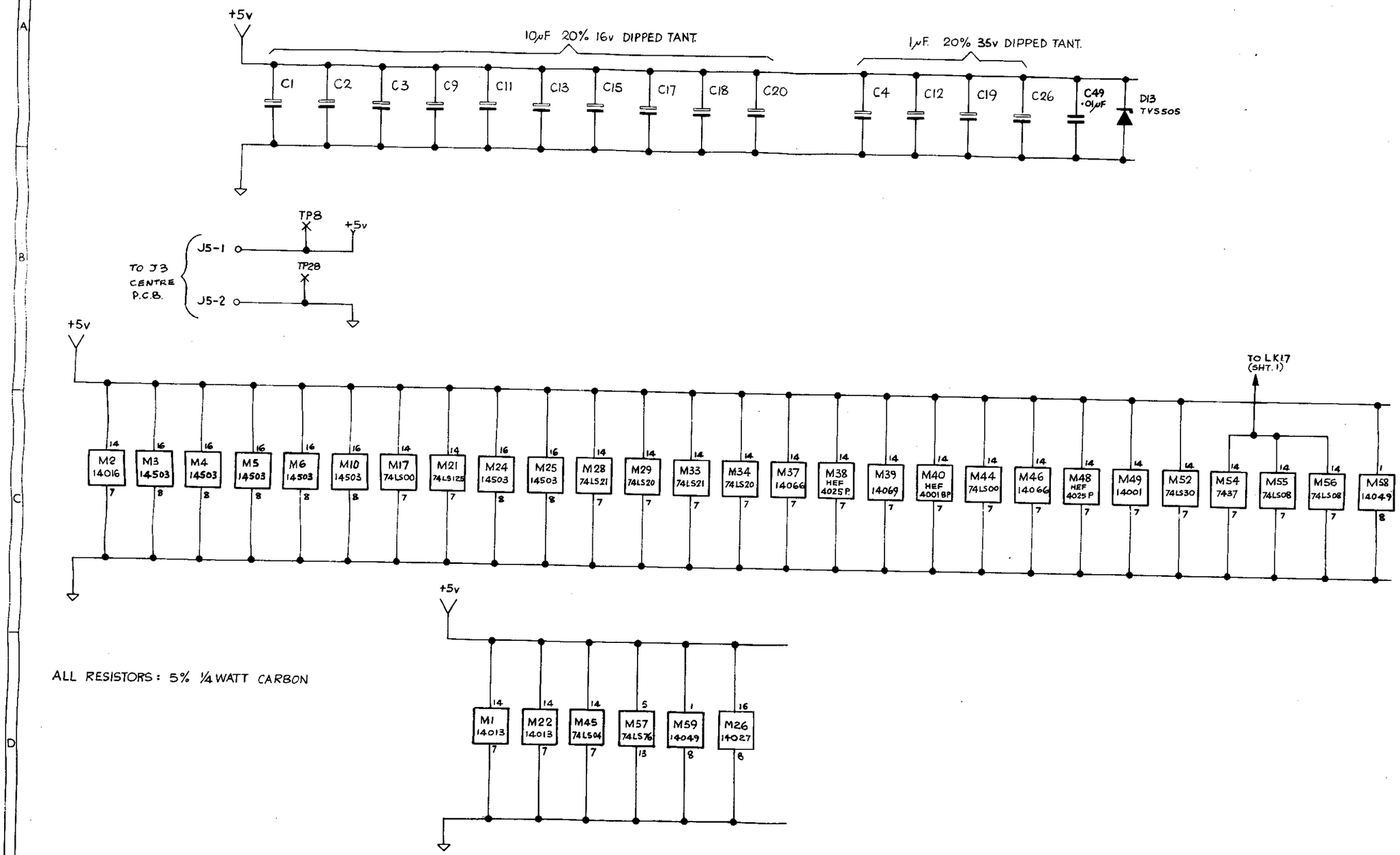

ALL RESISTORS: 5% ¼ WATT CARBON

ISS. A	CHANGES
1	RELEASED TO PRODUCTION 24.11.78
2	ECO 811 PCB UPDATE TO ISSUE 4 IL. 8.1.79
3	ISS 5 UPDATE TO PCB ECO.835/852 IL. 4-4-79
4	SEE SHTS 1 & 3
5	SEE SHEET 3
6	SEE SHEET 3
7	SEE SHEET 3
8	ECO.998. 1047 SEE SHTS 1–4 M38 WAS 14025
9	ECO. 1046 D13 WAS 1CTE-5 IL. 24.3.80
10	ECO. 1108 M40 WAS 14001 IL. 18.4.80
11	ECO. 1132 SEE SHEET 1
12	SEE SHEET 1
13	SEE SHEET 3
14	ECO 1214 M21 WAS 14050 JR 12·6·81
15	ECO 1243, 1251 SEE SHEET 1

DRAWN	CHECKED	DIMENSIONS IN	TOLERANCES ANGULAR ± ½°	MATERIAL
IL.	P.R.H.	MILLIMETRES	INCH DIMENSIONS: DECIMAL TO 3 PLACES ± ·005; DECIMAL TO 2 PLACES ± ·010; FRACTIONAL ± 1/64	
TRACED	APPROVED	SCALE ——	METRIC DIMENSIONS: DECIMAL TO 2 PLACES ± 1mm; DECIMAL TO 1 PLACE ± 2mm; WHOLE DIMENSIONS ± 4mm; UNLESS OTHERWISE STATED	FINISH ——
DATE 12.10.78	DATE	NOT TO BE SCALED		

datron ELECTRONICS LTD. NORWICH.

TITLE 1071 DIGITAL P.C.B. ASSY.

DRAWING SIZE A2

DRAWING No. 430300

SHEET 5 OF 5

DRAWING No.
400301
FIRST USED ON

THIRD ANGLE PROJECTION

DRAWN IN ACCORDANCE WITH BS 308

ALL BURRS TO BE REMOVED

NOTES

1. MAKE TP1-TP6 FROM 22 SWG. BTC. WIRE – PART Nº 540002.

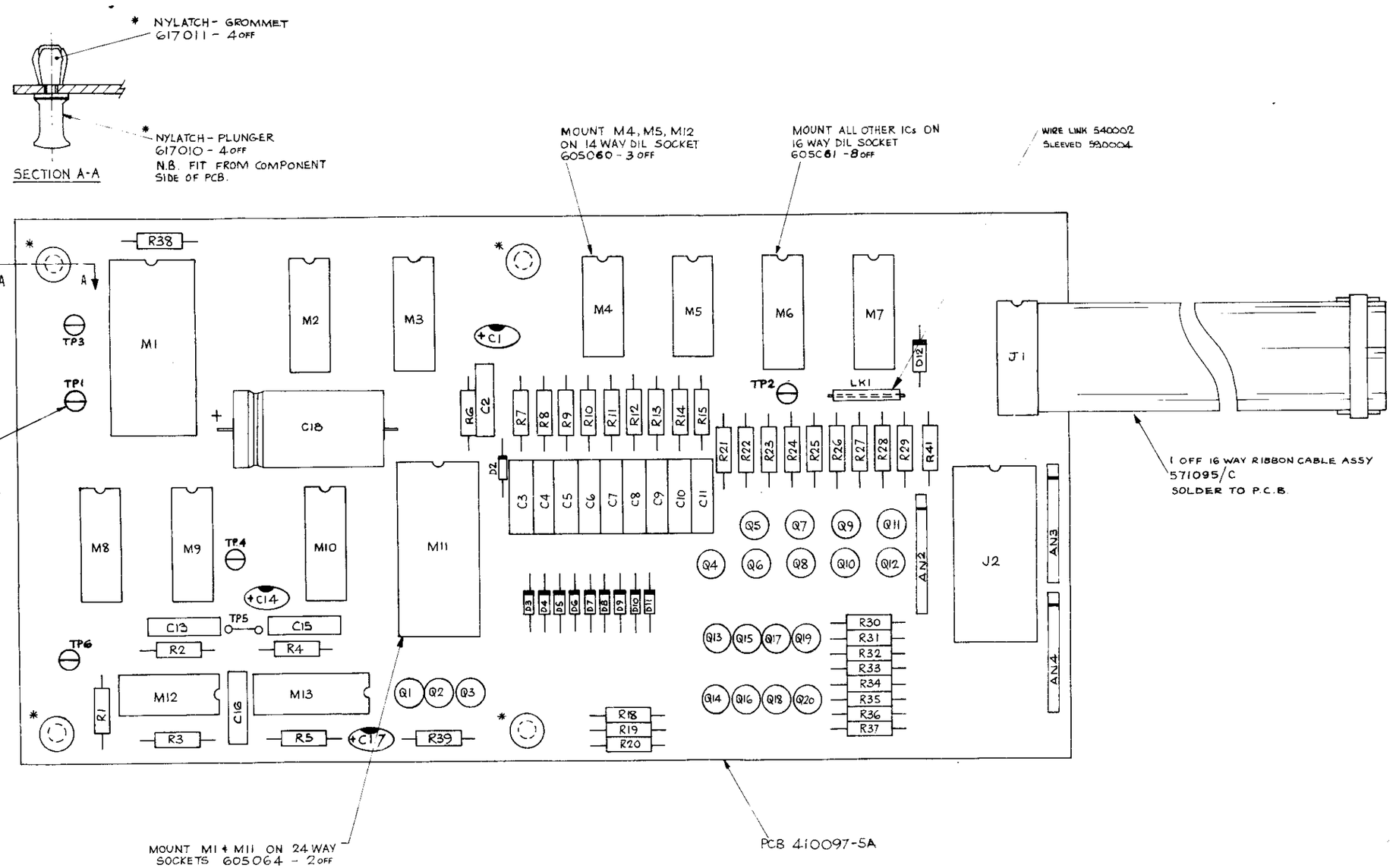

ISS.	CHANGES
C	
1	RELEASED TO PRODUCTION 29.9.78
2	C18 ADDED & R40 E.C.O 789. 17 NOV 78 W.G.S
3	R41 ADDED AN2-AN4 & D12 ADDED ECO 822 19 FEB 79 W.G.S
4	R40 WAS 180Ω 000181 NOW WIRE LINK E.C.O 854 8 MAY 79. W.G.S
5	CLIP FOR J1 WAS 606005. ECO 904 21.6.79 IL.
6	ECO 1000 & 1025 RIBBON CABLE CLIP WAS 606007. B.J. DIE WAS 82V.
7	ECO 1217 J1 WAS 16 WAY SOCKET UR 17.8.81
8	ECO 1253 PARTS LIST CHANGE. TO J2 UR 2.12.81

DRAWN IL.	CHECKED	DIMENSIONS IN MILLIMETRES	TOLERANCES ANGULAR ± 5° INCH DIMENSIONS DECIMAL TO 3 PLACES ± .005 DECIMAL TO 2 PLACES ± .010 FRACTIONAL ± 1/64 METRIC DIMENSIONS DECIMAL TO 2 PLACES ± .1mm DECIMAL TO 1 PLACE ± .2mm WHOLE DIMENSIONS ± .4mm UNLESS OTHERWISE STATED	MATERIAL SEE PARTS LIST	DRAWING SIZE A2
TRACED	APPROVED	SCALE 2:1 NOT TO BE SCALED		FINISH ———	
DATE 3.5.78	DATE			TITLE DISPLAY DRIVER PCB ASSY 1071/1081	DRAWING No. 400301 / SHEET 1 OF 7

datron ELECTRONICS LTD. NORWICH.

DRAWING No. 430301

FIRST USED ON 1071

THIRD ANGLE PROJECTION

DRAWN IN ACCORDANCE WITH BS 308

ALL BURRS TO BE REMOVED

NOTES

ISS.	CHANGES
1	RELEASED TO PRODUCTION 30-10-78
2	C18 ADDED & R40. ECO 789 17 NOV 78. W.G.S.
3	AN12-AN14 ADDED R41 & D12 ADDED E.C.O 822 16-FEB-79 W.G.S.
4	PCB WAS 1800. 000181 NOW WIRE LINK. E.C.O 854 8 MAY 79. W.G.S.
5	ECO 1075. D12 WAS 82V B.Z. 1-3-80.

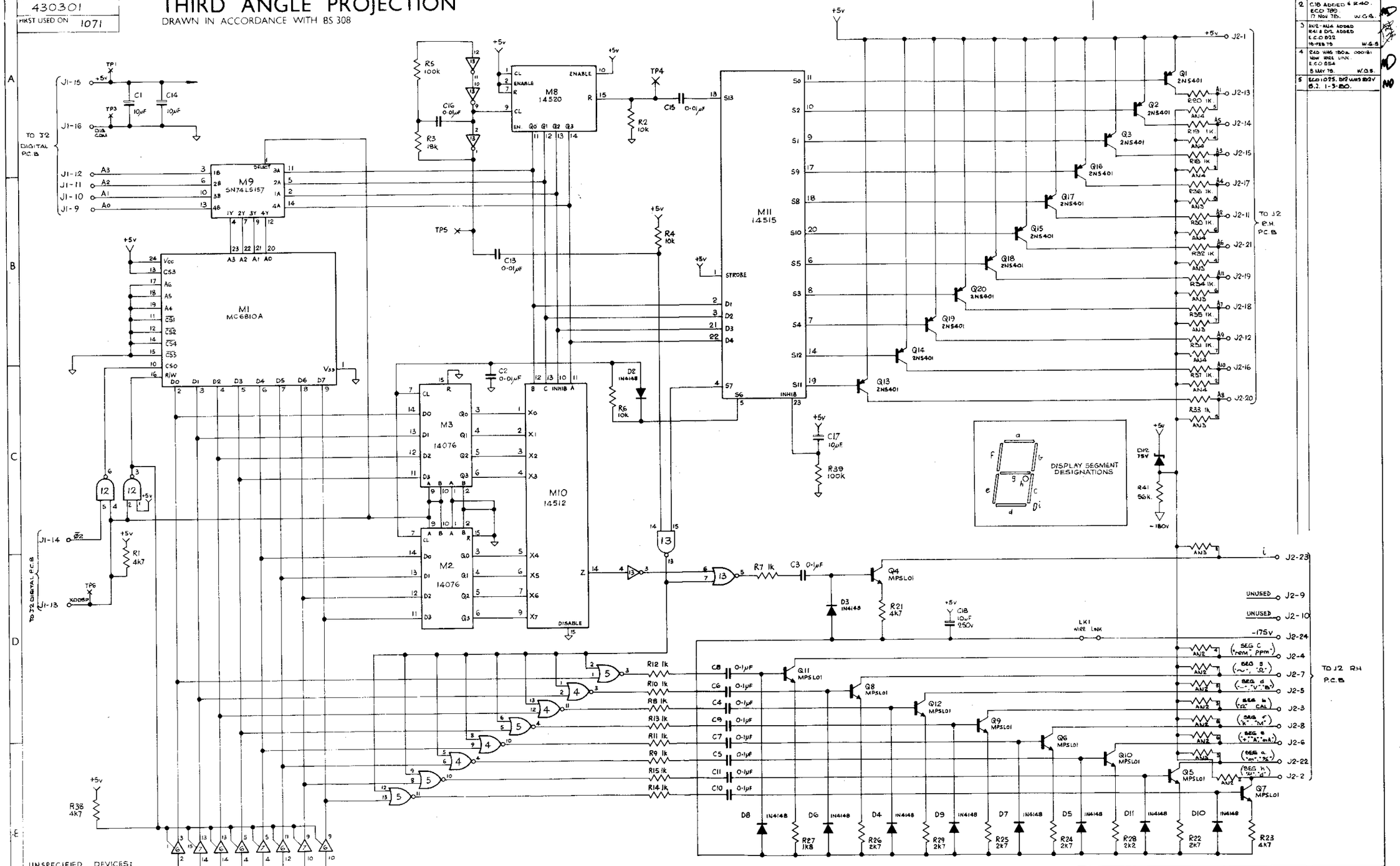

UNSPECIFIED DEVICES:

M13 = MC14572.
M4, M5 = MC14001BCP.
M6, M7 = MC14503BCP
M12 = SN74LS00

R1–R37 = 5% ¼W CARBON.
C1, C15 = 20% 25v DIP TANT.
C2–C14, C16 = 10% 250v POLYESTER

DRAWN I.L.	CHECKED	DIMENSIONS IN MILLIMETRES	TOLERANCES ANGULAR ± ° INCH DIMENSIONS DECIMAL TO 3 PLACES ± .005 DECIMAL TO 2 PLACES ± .010 FRACTIONAL ± 1/64 METRIC DIMENSIONS DECIMAL TO 2 PLACES ± 1mm DECIMAL TO 1 PLACE ± 2mm WHOLE DIMENSIONS ± 4mm UNLESS OTHERWISE STATED	MATERIAL	DRAWING SIZE A1
DATE 30.10.78	APPROVED	SCALE NOT TO BE SCALED		FINISH	

datron ELECTRONICS LTD. NORWICH.

TITLE: DISPLAY DRIVER PCB 1071/1081

DRAWING No. 430301

SHEET 1 OF 1

DRAWING NO	FIRST USED ON
400303	1071

THIRD ANGLE PROJECTION

DRAWN IN ACCORDANCE WITH BS 308

ALL BURRS TO BE REMOVED

NOTES

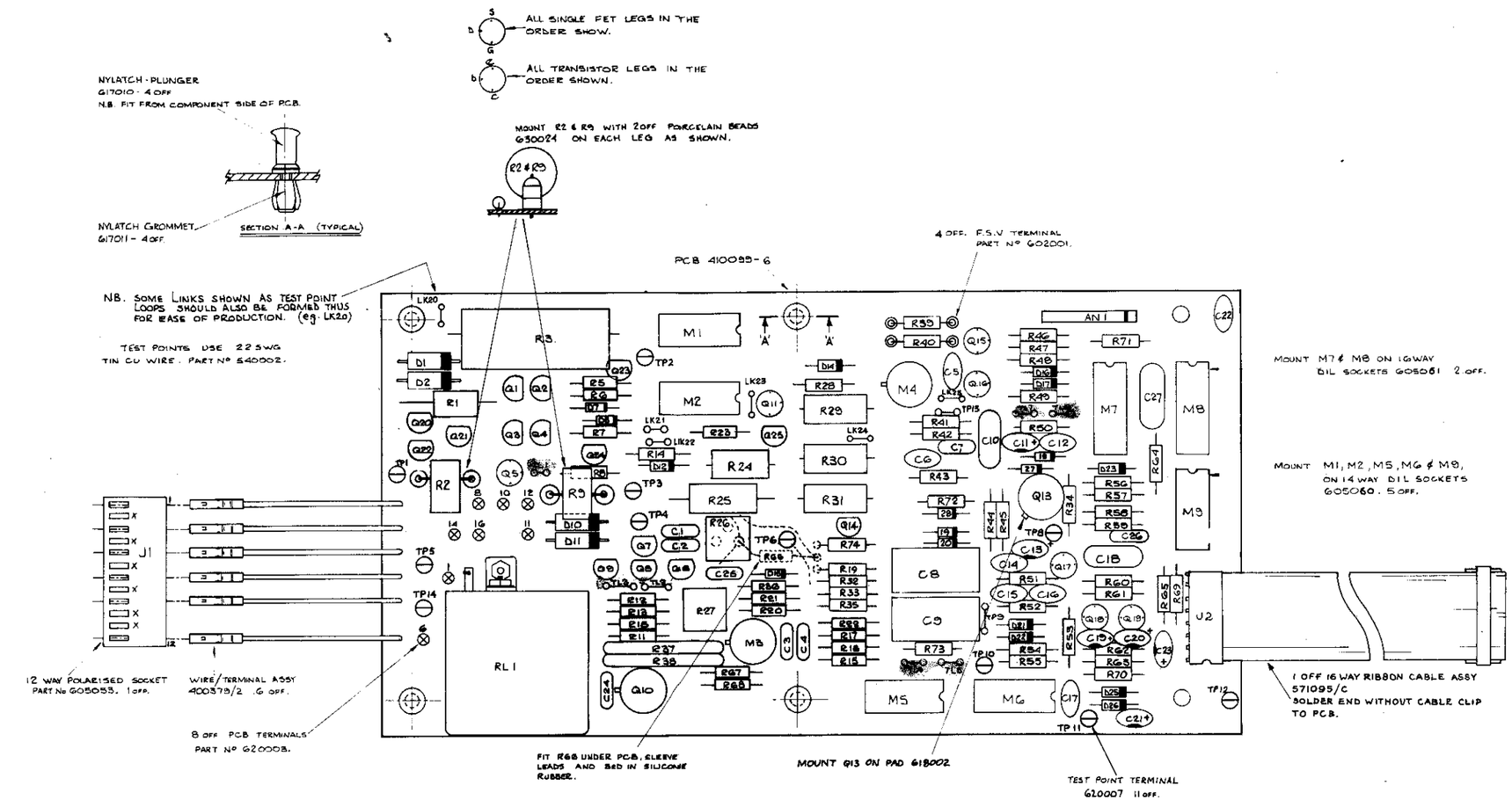

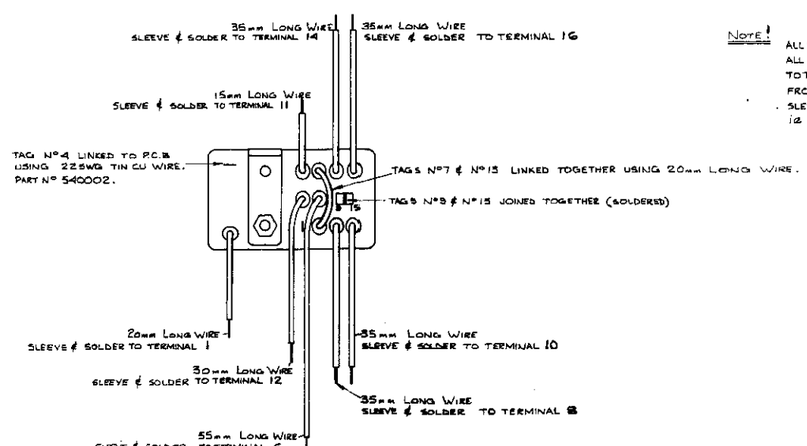

Note!

ALL WIRE IS 540008 PTFE INSULATED WHITE.
ALL LENGTHS OF WIRE SHOWN ON RELAY ARE TOTAL LENGTHS, THEN 4mm IS TO BE STRIPPED FROM EACH END.
SLEEVE WIRES WITH 590001 ½ PIECE FOR EACH CONNECTION 12 1 PIECE FOR EACH WIRE.

ISS	CHANGES
1	RELEASED TO PRODN 6-12-78
2	VALUE C2 CHANGED. BJ ECO 8140 27-2-79
3	C19 WAS 0.1uF, R56 WAS 1M & D23 WAS IN4148. ECO 8157. 4-6-79 BJ
4	ECO 8355 D24 DELETED. BJ 20-6-79 ECO 8375/1904 D7CSV3 NOW C217. RG-10K NOW 8K9. R15-15K NOW 24K.
5	ECO 930 RE-INSTATE D23 ECO 933 Q21, Q22 & Q23 U1334ES NOW U3095 B.J. 13-7-79.
6	ECO 960, 987, 972 RL1 WAS ITT. RELAY WIRE WAS PVC. MOUNTING PAD UNDER Q13. BJ 25-10-79
7	ECO 1000 & 1028. RIBBON CABLE CLIPS WERE 608007. CABLE 571110/8 ADDED. R2 & R9 MOUNTED ON BEADS 630024. BJ 3-1-80.
8	ECO 1056 & 1062 Q12 DELETED R32 WAS 2K7, 000272. R39 WAS 2K4pF. 043200 R56 WAS 15MΩ. 041863. Q21 ADDED. PCB NOW 166 4 TL & TP1 DELETED TP13 & TP14 ADDED. R39, F.S.V DELETED (2 off) R56 WAS 1M5. 000155 R66 & R68 ADDED C24 & C25 ADDED W.G.S. 6 FEB 80
9	ECO.1108 C26 ADDED 18.4.80
10	ECO.1115. 1124 R69 ADDED. PARTS LIST CHANGES TO C7 & C26. 3.6.80
11	ECO. 1134. R70 & D27 ADDED CUT TRACK FROM M5 PIN 8. 10.6.80
12	ECO. 1175 PCB WAS ISSUE 4. R71-R74 ADDED R69-R70 TRACKED-IN R10 DELETED. C27-D28 ADDED C26 D27 TRACKED-IN OTHER PARTS LIST CHANGES - SEE ECO. 29.11.80
13	ECO 1217 J2 WAS 16 WAY SOCKET JR 18-8-81
14	ECO 1300. R54, R48 & R65 VALUE CHANGE R66 POSITION CHANGE 30th MAR 82. BJ

B.J.	DIMENSIONS IN	TOLERANCES INCH DIMENSIONS DECIMAL TO 3 PLACES ± .005 DECIMAL TO 2 PLACES ± .010 FRACTIONAL ± 1/64 METRIC DIMENSIONS DECIMAL TO 3 PLACES ± 1mm DECIMAL TO 1 PLACE ± 2mm WHOLE DIMENSIONS ± 4mm UNLESS OTHERWISE STATED	ANGULAR ± °	MATERIAL	DRAWING SIZE A1
24-11-78	NOT TO BE SCALED			FINISH	datron ELECTRONICS LTD. NORWICH.
				TITLE 1071 OHMS PCB ASSY	DRAWING No. 400303 — SHEET 1 OF 12

DRAWING No. 430303

FIRST USED ON 1071

THIRD ANGLE PROJECTION

DRAWN IN ACCORDANCE WITH BS 308

ALL BURRS TO BE REMOVED

NOTES

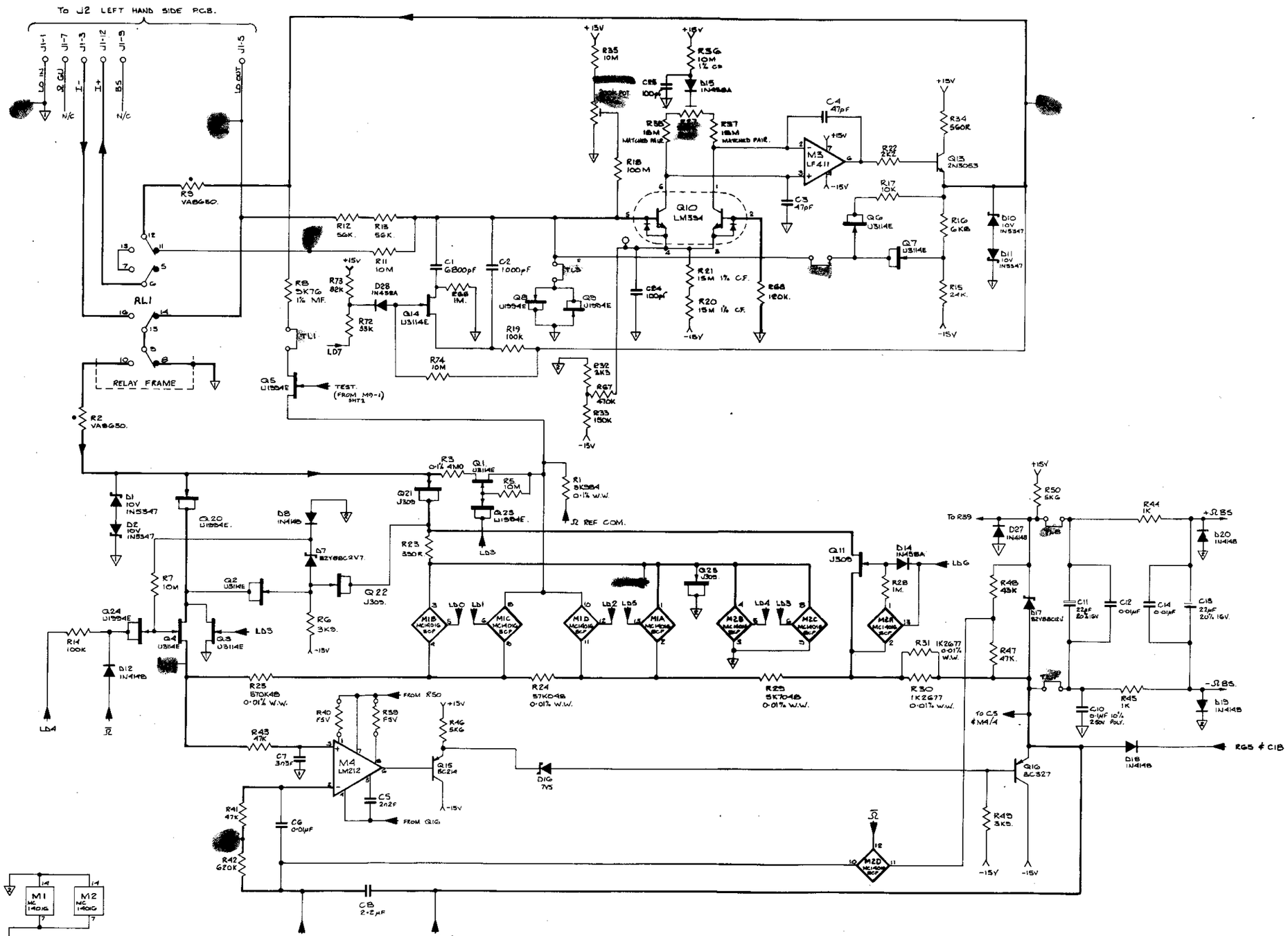

ISS.	CHANGES
1st	RELEASED.
2	D23 WAS IN4148. 8.4 R56 " 1M. 4-5-79 C19 " 0·1µF ECO837 MD
3	D24 DELETED. ECO 895 ECO 909. D7 C3V3 NOW C2V7. R6 - 10K NOW 3K9. R15 - 15K NOW 24K. BJ 20-6-79
4	ECO930 D23 RE-INSTATED. ECO 935 Q21, Q22 & Q23 U3946 NOW J309. B.J. 13-7-79 MD
5	ECO 1056 & 1062 Q12 DELETED R32 WAS 2K7. 000372 R36 WAS 2M7 ON PT. 040826 R56 WAS 18M2. 041825 D27 ADDED P.C.B. NOW 1984 T1, Q6 & T21 DELETED R22, R4 & R7 DELETED Q28 WAS U4E. 000156 RG4 & RG5 ADDED C24 & C25 ADDED W.B.S. 6 FEB 80 MD
6	SEE SHEET 2
7	SEE SHEET 2 MD
8	ECO. 1134. D27 ADDED. 18.6.80 MD
9	ECO. 1175. R72 R73 R74 D28 ADDED. R10 DELETED. R35 WAS 1M2. R26 WAS 20k. SEE ALSO SHEET 2 1.12.80 MD
10	ECO1300. R34 WAS 680R. R48 - 82K. RG6 WAS JOINED TO Q14, R19 NOW to 30V4 MAF 8.2 BJ MD

DRAWN BJ	CHECKED	DIMENSIONS IN MILLIMETRES	TOLERANCES INCH DIMENSIONS ANGULAR ±½° DECIMAL TO 3 PLACES ± .005 DECIMAL TO 2 PLACES ± .010 FRACTIONAL ± 1/64 METRIC DIMENSIONS DECIMAL TO 2 PLACES ± 1mm DECIMAL TO 1 PLACE ± 2mm WHOLE DIMENSIONS ± 5mm UNLESS OTHERWISE STATED
TRACED	APPROVED	SCALE	MATERIAL —
DATE 4-1-79	DATE	NOT TO BE SCALED	FINISH —

datron ELECTRONICS LTD. NORWICH.

TITLE OHMS PCB CIRCUIT 1071

DRAWING SIZE A1

DRAWING No. 430303

SHEET 1 OF 2

DRAWING No. 430303

FIRST USED ON 1071

THIRD ANGLE PROJECTION

DRAWN IN ACCORDANCE WITH BS 308

ALL BURRS TO BE REMOVED

NOTES

ISS.	CHANGES
1	RELEASED.
2	D23 WAS IN4148. B.J. R56 1M 4-6-75. C19 - 0·1µF ECO 857
3.	D24 DELETED. ECO 866 ECO 908. D7, C5V6 NOW C2V7 RG-10K, NOW 33K5. R15.15K NOW 24K. B.J. 20-6-75.
4	ECO 920. D23 REINSTATED. ECO 953 Q21, Q22 & Q23 U1994E3 NOW J3097 B.J. 12-7-79.
5	ECO 1054 & 1080. REFER SHEET 1 FOR DETAILS W.G.S. 6-FEB 80
6	ECO. 1108 C26 ADDED IL 21.4.80
7	ECO. 1115 C26 WAS 1nF. R69 ADDED. IL 3.6.80
8	ECO. 1154 R70 ADDED IL 19.6.80
9	ECO. 1175 R71 & C27 ADDED. IL 1.12.80
10	ECO 1300. R68 WAS 2K7. BJ 30-MAR 82.

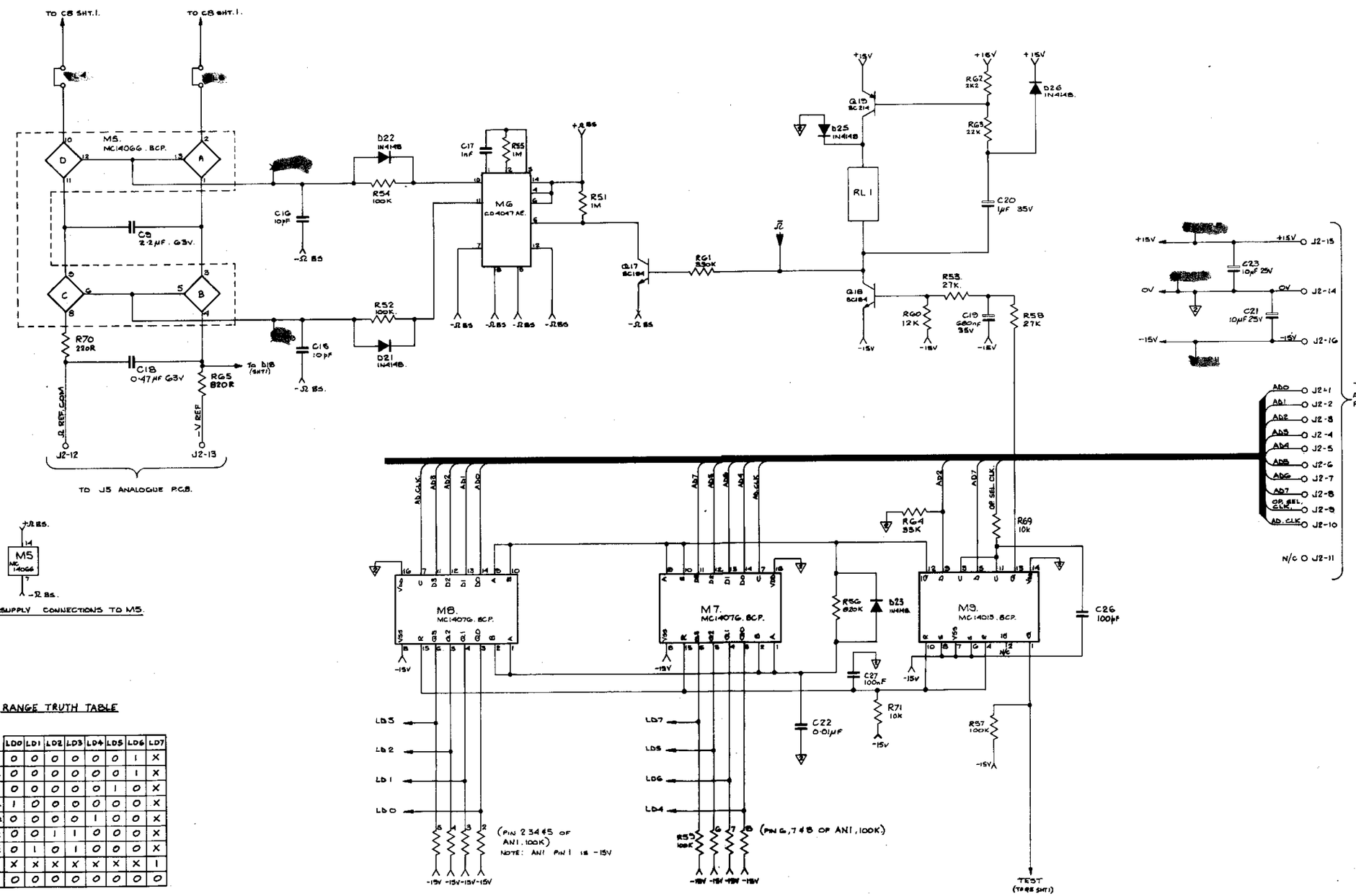

SUPPLY CONNECTIONS TO M5.

RANGE TRUTH TABLE

		LD0	LD1	LD2	LD3	LD4	LD5	LD6	LD7
RANGE	10Ω	0	0	0	0	0	0	1	X
	100Ω	0	0	0	0	0	0	1	X
	1KΩ	0	0	0	0	0	1	0	X
	10KΩ	1	0	0	0	0	0	0	X
	100KΩ	0	0	0	0	1	0	0	X
	1MΩ	0	0	1	1	0	0	0	X
	10MΩ	0	1	0	1	0	0	0	X
FILTER		X	X	X	X	X	X	X	1
Ω		0	0	0	0	0	0	0	0

LOGIC '0' = -15V
LOGIC '1' = 0V
LOGIC 'X' = 'DONT CARE' CONDITION

DRAWN	CHECKED	DIMENSIONS IN	TOLERANCES	MATERIAL	datron ELECTRONICS LTD. NORWICH.	DRAWING SIZE
B.J.		MILLIMETRES	ANGULAR ±½° INCH DIMENSIONS DECIMAL TO 3 PLACES ± ·005 DECIMAL TO 2 PLACES ± ·010 FRACTIONAL ± 1/64 METRIC DIMENSIONS DECIMAL TO 2 PLACES ± 1mm DECIMAL TO 1 PLACE ± 2mm WHOLE DIMENSIONS ± 4mm UNLESS OTHERWISE STATED	FINISH	TITLE OHMS P.C.B CIRCUIT. 1071.	A1
TRACED	APPROVED	SCALE			DRAWING No. 430303	SHEET 2 OF 2
DATE 4-1-79	DATE	NOT TO BE SCALED				

DRAWING No. 400304

FIRST USED ON 1061/1071

THIRD ANGLE PROJECTION

DRAWN IN ACCORDANCE WITH BS 308

ALL BURRS TO BE REMOVED

NOTES

CURRENT OPTION FUSE ASSEMBLY

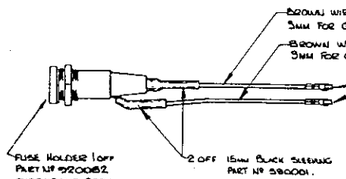

R25 NOTE

* IMPORTANT NOTE!

R25 RESISTOR TO BE FITTED LAST SO THAT RL3 & RL4 WIRING TO P.C.B. CAN BE DONE WITH EASE.

OHMS GUARD LEAD DETAIL

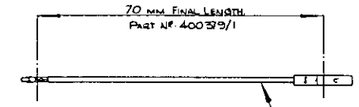

NYLATCH ASSEMBLY (4 POSITIONS)

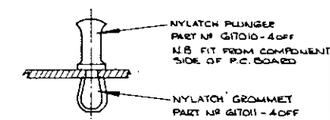

SECTION A-A TYPICAL

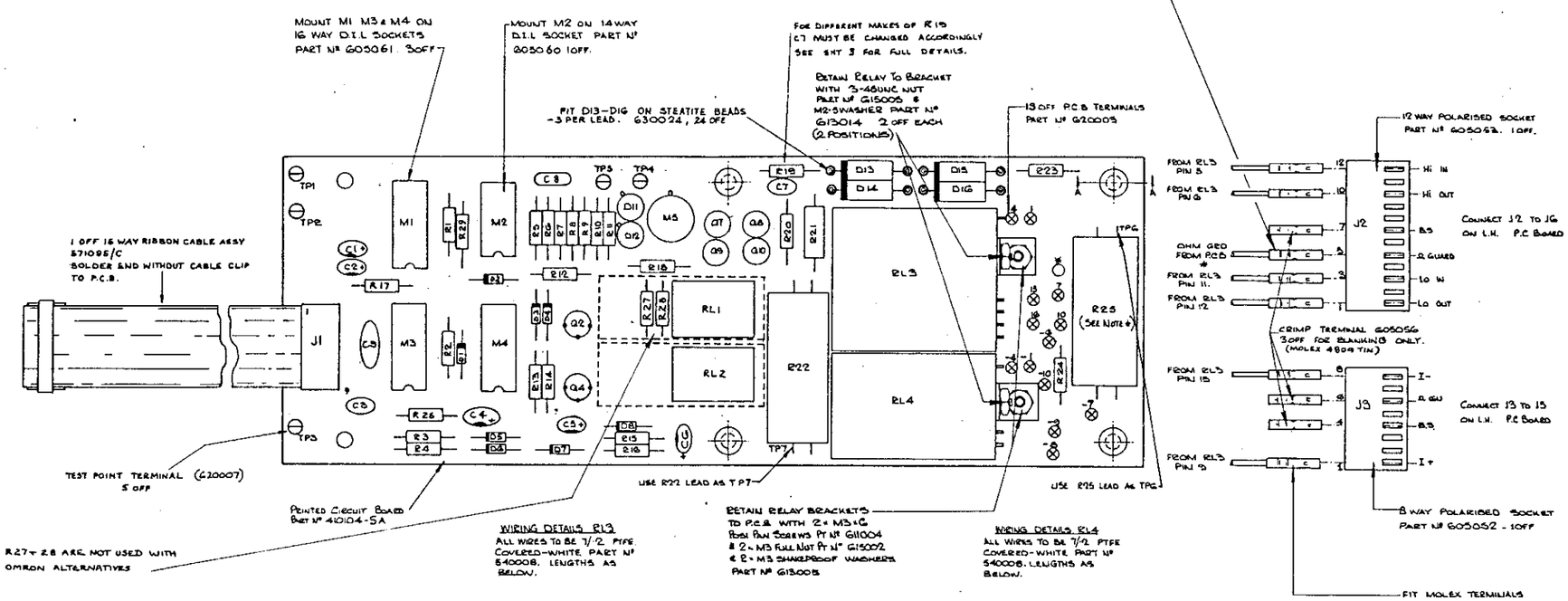

WIRING DETAILS RL3

ALL WIRES TO BE 7/·2 PTFE COVERED-WHITE PART Nº 540008. LENGTHS AS BELOW.

WIRING DETAILS RL4

ALL WIRES TO BE 7/·2 PTFE COVERED-WHITE PART Nº 540008. LENGTHS AS BELOW.

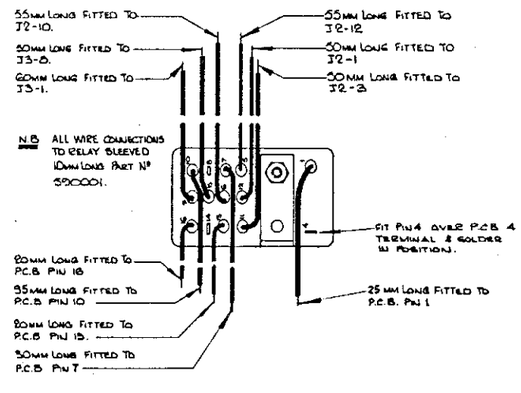

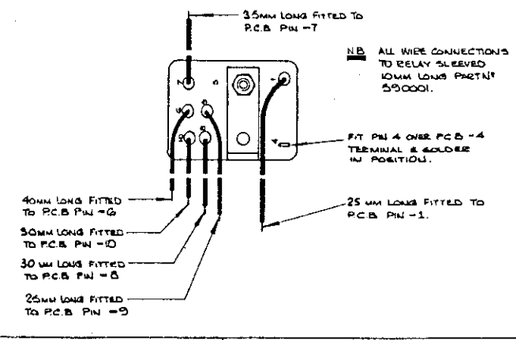

ISS	CHANGES
A	17 JULY 79 W.G.S.
B	C1 POSITION CHANGED P.C.B WAS ISSUE 2. R2 & C4 VALUES CHANGED W.G.S 21-AUG 79
C	STEATITE BEADS ADDED TO MOUNT D13-D16 24 OFF. JL 24.9.79
1	RELEASED TO PRODUCTION. 26.9.79
2	ECO 572.1987. RL3 & RL4 WERE ITT. RELAY WIRING WAS PVC. BJ 26-10-79
3	ECO'S 1000, 1012, 1037 & 1038 RIBBON CABLE CLIP WAS 606007. CABLE WAS 571060/A. FUSE HOLDER WAS 920047 C7 WAS 2n2F W1 ADDED. R8, R9, D9, D10, R5 & R6 DELETED. B.J 4-1-80.
4	ECO 1048 R26-R28 ADDED JL 17.1.80
5	ECO 1095, 1110, 1087 J2-7 J3-4 + J3-6 WERE 605057 D17 + D18 REMOVED C8 ADDED JL 18.4.80
6	ECO. 1116 R29 ADDED. CUT TRACK ON PCB BETWEEN M2 & 4-11-9 PARTS LIST CHANGE TO C8 JL 3.6.80
7	ECO. 1189 OHMS GUARD LEAD WAS 400379/2 JL 17.12.80
8	ECO 1050 R 8, 9, C9, ADDED R 12 WAS 1K R 13, 7 WERE 12K R 5, 6, 14 WERE 27K R 26, 27, 28 WERE 10K R 17 WAS 1M Q1, Q3, (N1, L1) DELETED JR 25.2.81
9	ECO 1217 J1 WAS 16 WAY SOCKET. JR 16-8-81
10	ECO 1237 R 27 + 28 WERE 330 R. JR 24-11-81
11	ECO 1323 D13, D14, D15 AND D16 WERE 200010. PCB WAS ISSUE 5. JR 10.5.83.

DRAWN W.G. SMITH	CHECKED	DIMENSIONS IN MILLIMETRES	TOLERANCES ANGULAR ± ° INCH DIMENSIONS DECIMAL TO 2 PLACES ± .005; DECIMAL TO 3 PLACES ± .010; FRACTIONAL ± 1/64; METRIC DIMENSIONS DECIMAL TO 2 PLACES ± 1mm; DECIMAL TO 1 PLACE ± 2mm; WHOLE DIMENSIONS ± 4mm; UNLESS OTHERWISE STATED	MATERIAL	DRAWING SIZE A1
TRACED	APPROVED	SCALE NOT TO BE SCALED		FINISH	
DATE 18 JULY 79	DATE			TITLE CURRENT P.C. BOARD LAYOUT 1061/1071	DRAWING No. 400304

datron ELECTRONICS LTD. NORWICH.

SHEET 1 OF 7

DRAWING No. 430 304

FIRST USED ON 1061/1071

THIRD ANGLE PROJECTION

DRAWN IN ACCORDANCE WITH BS 308

ALL BURRS TO BE REMOVED

NOTES

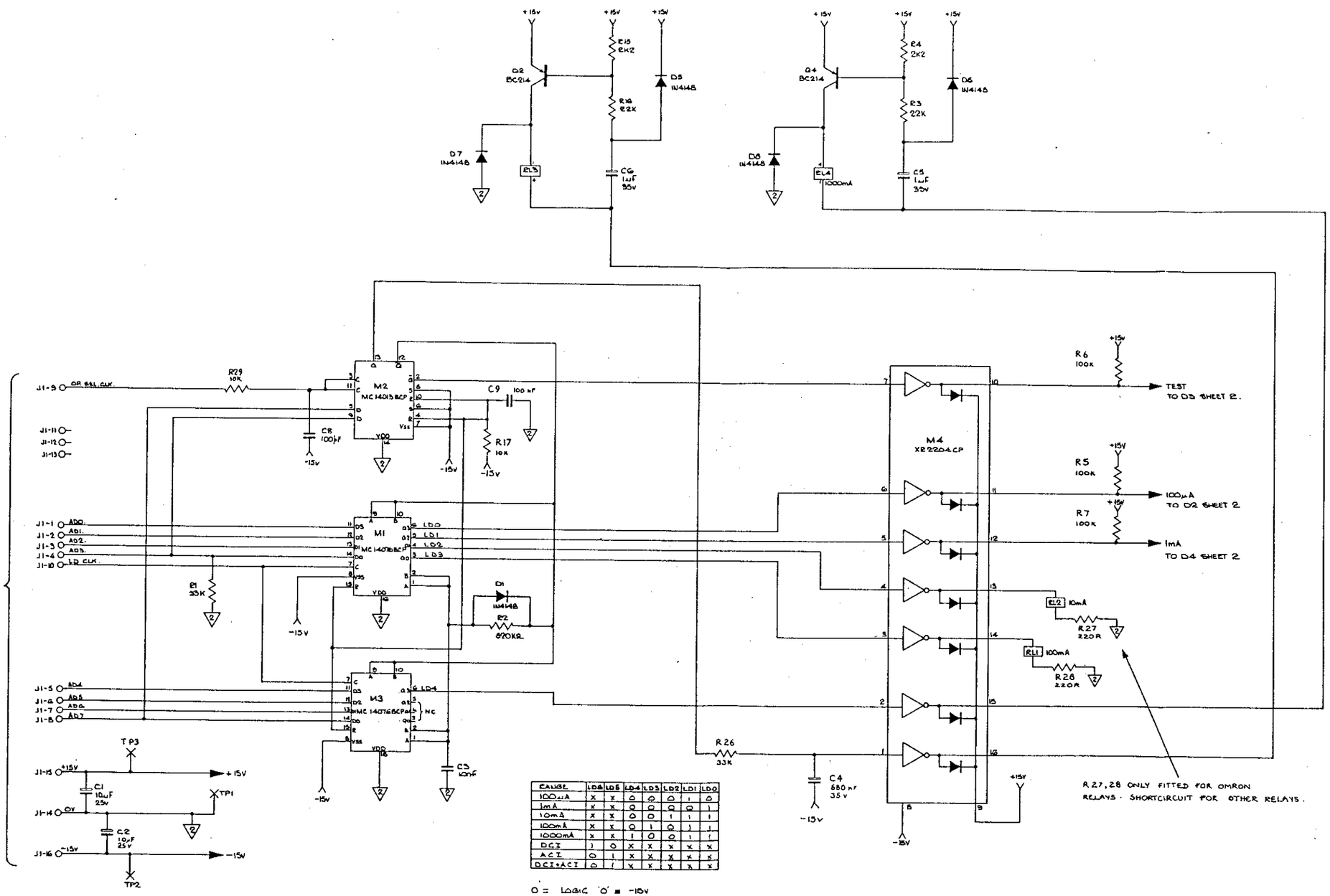

RANGE	LD6	LD5	LD4	LD3	LD2	LD1	LD0
100μA	X	X	0	0	0	1	0
1mA	X	X	0	0	0	0	1
10mA	X	X	0	0	1	1	1
100mA	X	X	0	1	0	1	1
1000mA	X	X	1	0	0	1	1
DCI	1	0	X	X	X	X	X
ACI	0	1	X	X	X	X	X
DCI+ACI	0	1	X	X	X	X	X

0 = LOGIC '0' = -15V
1 = LOGIC '1' = 0V
X = DONT CARE CONDITION

ISS	CHANGES
A	18 JULY 79 W.G.S.
B	R2 WAS 1MΩ - 000103. C4 WAS 10nF 250V CHG DR 101103. W.G.S. 21-AUG 79
1	RELEASED TO PRODUCTION. 28.9.79.
2	ECO 1037 & 1038. SEE SHEET 2.
3	SEE SHEET 2 ECO. 1048 IL 18.1.80
4	ECO. 1087. 1110 C8 ADDED IL 14.4.80
5	ECO 1116 R29 ADDED. C8 WAS 1nF. IL 3.6.80
6	ECO1080 R13, R14, Q1, Q3 *AND 1 DELETED. R5-7C4 MOVED. C9 R17, R26-R28 ADDED JR 26.2.81
7	ECO 1257 R27 AND R28 WERE 330R. JR 24.11.81

DRAWN W.G. SMITH	CHECKED	DIMENSIONS IN MILLIMETRES	TOLERANCES ANGULAR ± ° INCH DIMENSIONS DECIMAL TO 3 PLACES ± .005 DECIMAL TO 2 PLACES ± .010 FRACTIONAL ± 1/64 METRIC DIMENSIONS DECIMAL TO 2 PLACES ± 1mm DECIMAL TO 1 PLACE ± 2mm WHOLE DIMENSIONS ± 4mm UNLESS OTHERWISE STATED
TRACED	APPROVED	SCALE NOT TO BE SCALED	MATERIAL
DATE 20 JULY 79	DATE		FINISH

datron ELECTRONICS LTD. NORWICH.

TITLE CURRENT PC BOARD CIRCUIT DIAGRAM 1061-1071

DRAWING SIZE A1

DRAWING No. 430304

SHEET 1 of 2

DRAWING No 430304

FIRST USED ON 1061/1071

THIRD ANGLE PROJECTION

DRAWN IN ACCORDANCE WITH BS 308

ALL BURRS TO BE REMOVED

NOTES
1. 470pF IF R19 MANUFACTURED BY MANN COMP.
330pF " " " KELVIN.

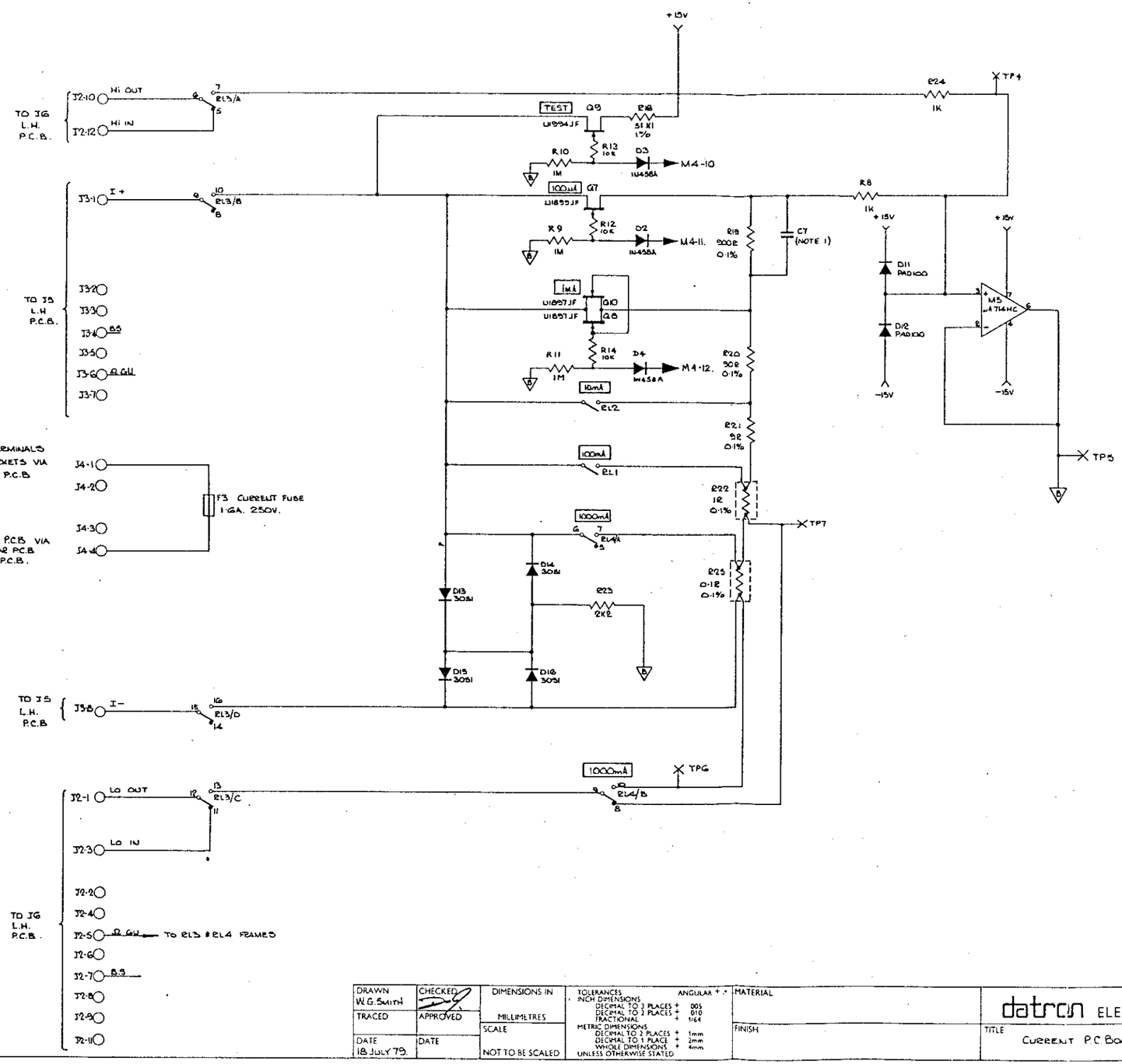

SYM	CHANGES
A	18 JULY 79 W.G.S
B	SEE SHT 1
1	RELEASED TO PRODUCTION 25.9.79
2	ECO. 1037 & 1038. C7 WAS 30PF. E8, E9, D5, D10, Q5, & Q6 DELETED. S.J. 4.1.80
3	ECO 1048 R26 - R28 ADDED IL 18.1.80
4	ECO. 1087 D17, D18 REMOVED IL 14.4.80
5	SEE SHEET 1
6	ECO 1080 R12 - 14 TRACKED IN TO P.C.B. DESIGNATORS REDEFINED. JR 26.2.81
7	SEE SHEET 1

DRAWN W.G.Smith	CHECKED	DIMENSIONS IN MILLIMETRES	TOLERANCES ANGULAR ± ° INCH DIMENSIONS DECIMAL TO 3 PLACES ± .005 DECIMAL TO 2 PLACES ± .010 FRACTIONAL ± 1/64 METRIC DIMENSIONS DECIMAL TO 2 PLACES ± 1mm DECIMAL TO 1 PLACE ± 2mm WHOLE DIMENSIONS ± 4mm UNLESS OTHERWISE STATED	MATERIAL	DRAWING SIZE A1
TRACED	APPROVED	SCALE NOT TO BE SCALED		FINISH	datron ELECTRONICS LTD. NORWICH.
DATE 18 JULY 79.	DATE			TITLE CURRENT P.C. BOARD CIRCUIT DIAGRAM - 1061-1071	DRAWING No. 430304 SHEET 2 OF 2

DRAWING No.	FIRST USED ON
400307	1061/1071

THIRD ANGLE PROJECTION

DRAWN IN ACCORDANCE WITH BS 308

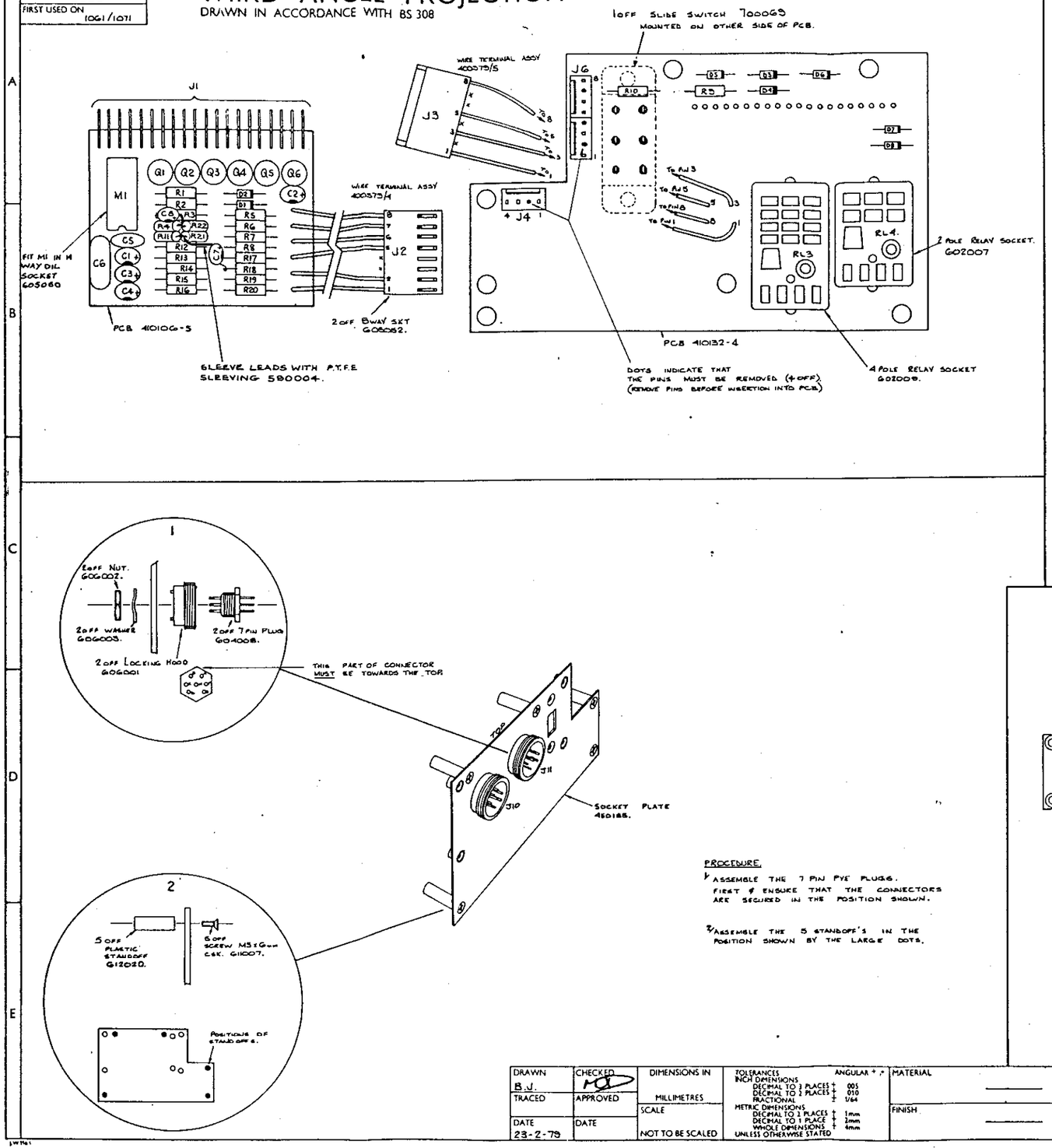

ALL BURRS TO BE REMOVED

NOTES

IMPORTANT.

FOR CRIMP PINS USE TOOL Nº HTR22G2A.

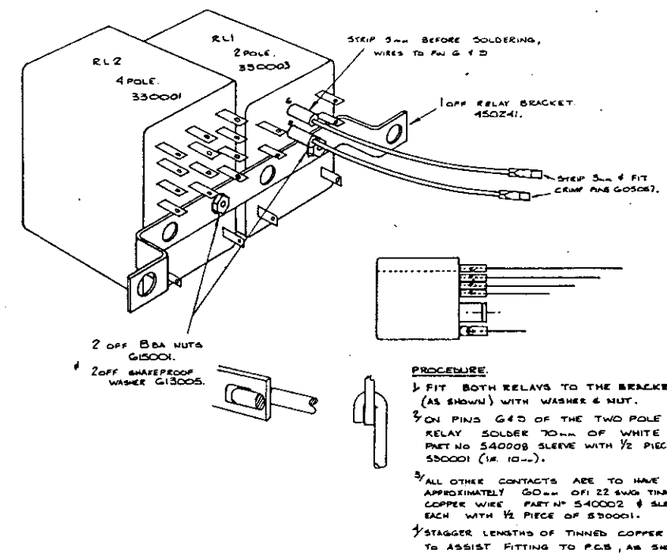

PROCEDURE.

1/ FIT BOTH RELAYS TO THE BRACKET (AS SHOWN) WITH WASHER & NUT.

2/ ON PINS 6 & 7 OF THE TWO POLE RELAY SOLDER 70mm OF WHITE WIRE PART No 540008 SLEEVE WITH ½ PIECE OF 590001 (i.e. 10mm).

3/ ALL OTHER CONTACTS ARE TO HAVE APPROXIMATELY 60mm OF 22 SWG TINNED COPPER WIRE PART Nº 540002 & SLEEVE EACH WITH ½ PIECE OF 590001.

4/ STAGGER LENGTHS OF TINNED COPPER WIRES TO ASSIST FITTING TO P.C.B, AS SHOWN.

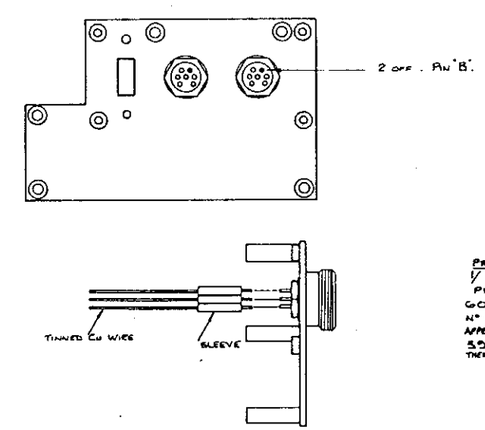

PROCEDURE.

1/ ASSEMBLE THE 7 PIN PYE PLUGS. FIRST & ENSURE THAT THE CONNECTORS ARE SECURED IN THE POSITION SHOWN.

2/ ASSEMBLE THE 5 STANDOFF'S IN THE POSITION SHOWN BY THE LARGE DOTS.

PROCEDURE

1/ ALL PINS ON EACH SOCKET EXCEPT PIN 8 (SHOWN SOLID), SOLDER ON 60mm OF TINNED COPPER WIRE. PART Nº 540002 & SLEEVE ALL JOINTS WITH APPROXIMATELY 16mm OF SLEEVING PART No 590001.
THERE SHOULD NOW BE 12 WIRES.

ISS.	CHANGES
A	
1	RELEASED 26-3-79
2	LK1 REPLACED BY E10 600008. DO DELETED ECO 502/1007 3 JUN 79 B.J.
3	ECO 572. 25-10-79 RL1, RL2, RL3 & RL4 WERE ITT. B.J.
4	ECO 981. 6-11-79. R9 WAS 33K. R10 WAS 10Ω R11 & R12 ADDED. D7 ADDED. D3 DELETED 400579/4 IAW ABOVE. PCB 1 UPDATED. B.J.
5	ECO 1071, 1054. R18 MOVED & WAS 39K NOW 1M. LK1 ADDED. D7 & E10 DELETED R9 WAS 18K. B.J. 2-1-80
6	ECO 1085. POLARISING KEY FOR J3 REMOVED. J4 WAS 8WAY CONN J5 REMOVED - SEE SHEET 2 JL 22.4.80
7	ECO. 1166, 1154. R1 WAS 18K. R10, R13, R14, R15, R16, R17, R18, R19, R20, C3, C4, C5, C6, D5, D6, D7, Q5, Q6 & LK1 ADDED. JL 24.9.80
8	ECO 1199 R10 WAS 12K JR 26.2.81
9	ECO 1329 R21, R22, C7 AND C8 ADDED. PART LIST CHANGES. JR 8.7.82

DRAWN	CHECKED	DIMENSIONS IN	TOLERANCES	MATERIAL
B.J.		MILLIMETRES	INCH DIMENSIONS: DECIMAL TO 3 PLACES ± .005; DECIMAL TO 2 PLACES ± .010; FRACTIONAL ± 1/64; METRIC DIMENSIONS: DECIMAL TO 2 PLACES ± 1mm; DECIMAL TO 1 PLACE ± 2mm; WHOLE DIMENSIONS ± 4mm; UNLESS OTHERWISE STATED; ANGULAR ± .5°	———
TRACED	APPROVED	SCALE		FINISH
DATE 23-2-79	DATE	NOT TO BE SCALED		———

datron ELECTRONICS LTD. NORWICH.

TITLE: REAR INPUT / RATIO ASSY

DRAWING SIZE: A1

DRAWING No. 400307

SHEET 1 OF 8

DRAWING No. 400307.

FIRST USED ON 1061/71

THIRD ANGLE PROJECTION

DRAWN IN ACCORDANCE WITH BS 308

ALL BURRS TO BE REMOVED

NOTES

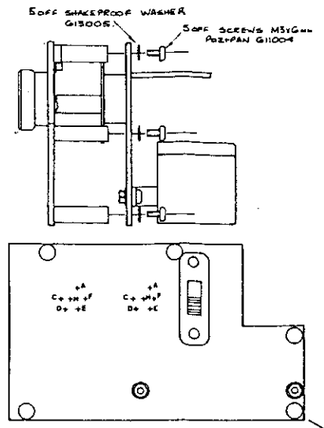

3/ BOTTOM VIEW SHOWS THE HOLES IN THE P.C.B (INDICATED BY CROSSES). THESE HOLES ARE FOR THE WIRES FROM THE TWO 7 PIN SOCKETS.
IT IS A SUGGESTION THAT THE WIRES ARE STAGGERED TO MAKE ASSY EASIER (AS WIRING THE RELAYS).

PROCEDURE.

① THE WIRES SHOULD LINE UP WITH THE APPROPRIATE HOLES. IE. WIRE FROM PIN A OF SOCKET SHOULD BE INSERTED INTO HOLE A, WIRE FROM PIN C TO HOLE C AND SO ON.

② WHEN THE WIRES ARE INSERTED IN THE APPROPRIATE HOLES. SECURE THE 2 ASSYS TOGETHER WITH THE M3X6mm POZI-PAN SCREWS & SHAKEPROOF WASHERS, SCREWED IN THE 5 STANDOFFS. (AS DETAILED)

③ LIGHTLY PULL ON THE TW COPPER WIRES SO THE WIRE IS TAUT, THEN SOLDER & CROP IN THE USUAL MANNER.

2/ INSERT CONNECTORS AS SHOWN.
SOLDER ALL 20 MAP PINS & CROP LEGS IN USUAL MANNER.
THE BOARD IS TO BE AT 90° WHEN SOLDERED IN.

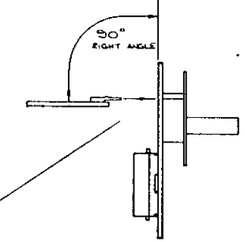

1/ SKETCH BELOW SHOWS THE 2 RELAY & BRACKET ASSEMBLY (FROM SHEET 1). THE CROSSES INDICATE HOLES IN THE P.C.B INTO WHICH THE WIRES FROM THE RELAYS ARE INSERTED.

PROCEDURE

① INSERT THE WIRES INTO THE APPROPRIATE HOLES IN THE PCB (WIRES CUT AT DIFFERENT LENGTHS TO AID ASSEMBLY).

② WHEN THE WIRES ARE ALL IN PLACE SECURE THE BRACKET TO THE PCB USING THE SCREWS, WASHERS & NUTS SHOWN BELOW.

③ SOLDER & CROP WIRES IN THE USUAL MANNER. INSERT THE CRIMP PINS INTO SOCKET J5 PIN 6 OF RELAY TO PIN 4 OF J5 & PIN 5 TO PIN 1 AS SHOWN BELOW.

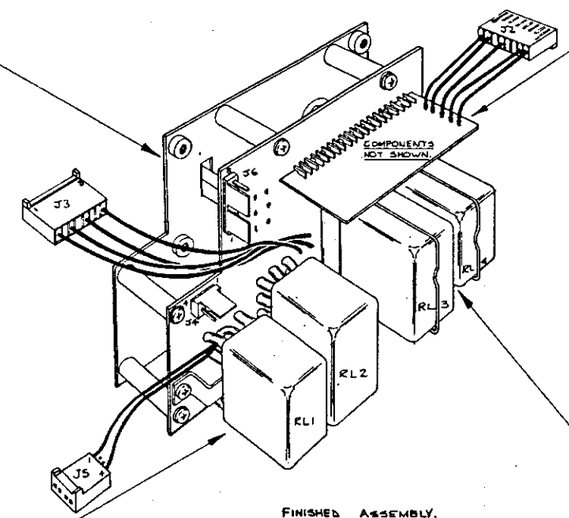

FINISHED ASSEMBLY.

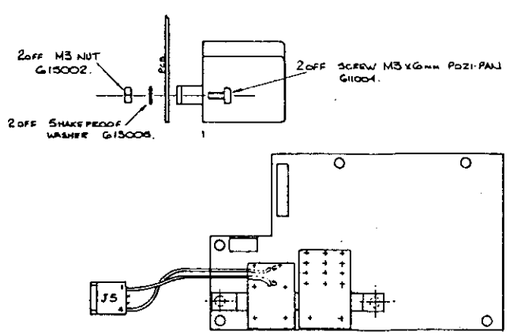

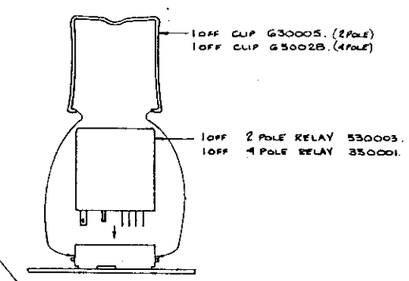

4/ THE LAST PROCEDURE IS TO PLUG IN THE 4 & 2 POLE RELAYS & HOLD IN PLACE BY THE CLIPS PROVIDED AS DETAILED IN ABOVE SKETCH & FINISHED VIEW.

ISS.	CHANGES
A	
1	RELEASED 26-3-79
2	ECO 900/WRSE SHT 1 5 JUNE 79 W.O.S.
3	SEE SHT 1. 25-10-79. BJ
4	SEE SHT 1. 6-11-79 B.J.
5	SEE SHT. 1. 7-1-80. BJ
6	ECO. 1085 J5 WAS 8 WAY CONN. IL 22.4.80
7	SEE SHEET 1 24.3.80
8	SEE SHEET 1 26.2.81
9	SEE SHT 1

DRAWN B.J.	CHECKED MDD	DIMENSIONS IN MILLIMETRES	TOLERANCES ANGULAR ± ° INCH DIMENSIONS DECIMAL TO 3 PLACES ± .005 DECIMAL TO 2 PLACES ± .010 FRACTIONAL ± 1/64 METRIC DIMENSIONS DECIMAL TO 2 PLACES ± 1mm DECIMAL TO 1 PLACE ± 2mm WHOLE DIMENSIONS ± 4mm UNLESS OTHERWISE STATED	MATERIAL ——	datron ELECTRONICS LTD. NORWICH.
TRACED	APPROVED	SCALE NOT TO BE SCALED		FINISH ——	TITLE REAR INPUT / RATIO ASSY.
DATE 2-3-79	DATE				DRAWING No. 400307

DRAWING SIZE A1

SHEET 2 OF 8

DRAWING No.
430307
FIRST USED ON
1061/1071

THIRD ANGLE PROJECTION

DRAWN IN ACCORDANCE WITH BS 308

ALL BURRS TO BE REMOVED

NOTES

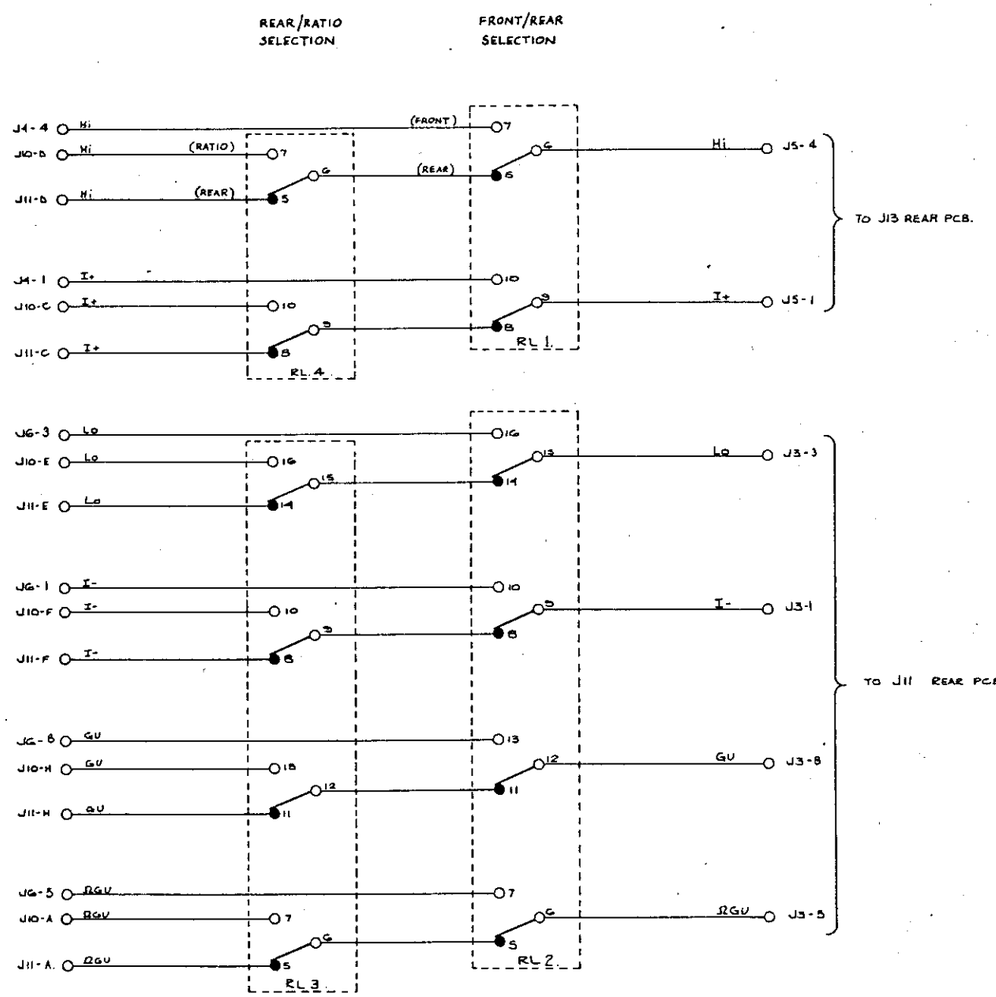

NOTE: J4 & J6 ARE FROM THE FRONT PANEL TERMINALS.
J10. IS THE RATIO INPUT SOCKET ON REAR PANEL.
J11. IS THE REAR INPUT SOCKET ON REAR PANEL.

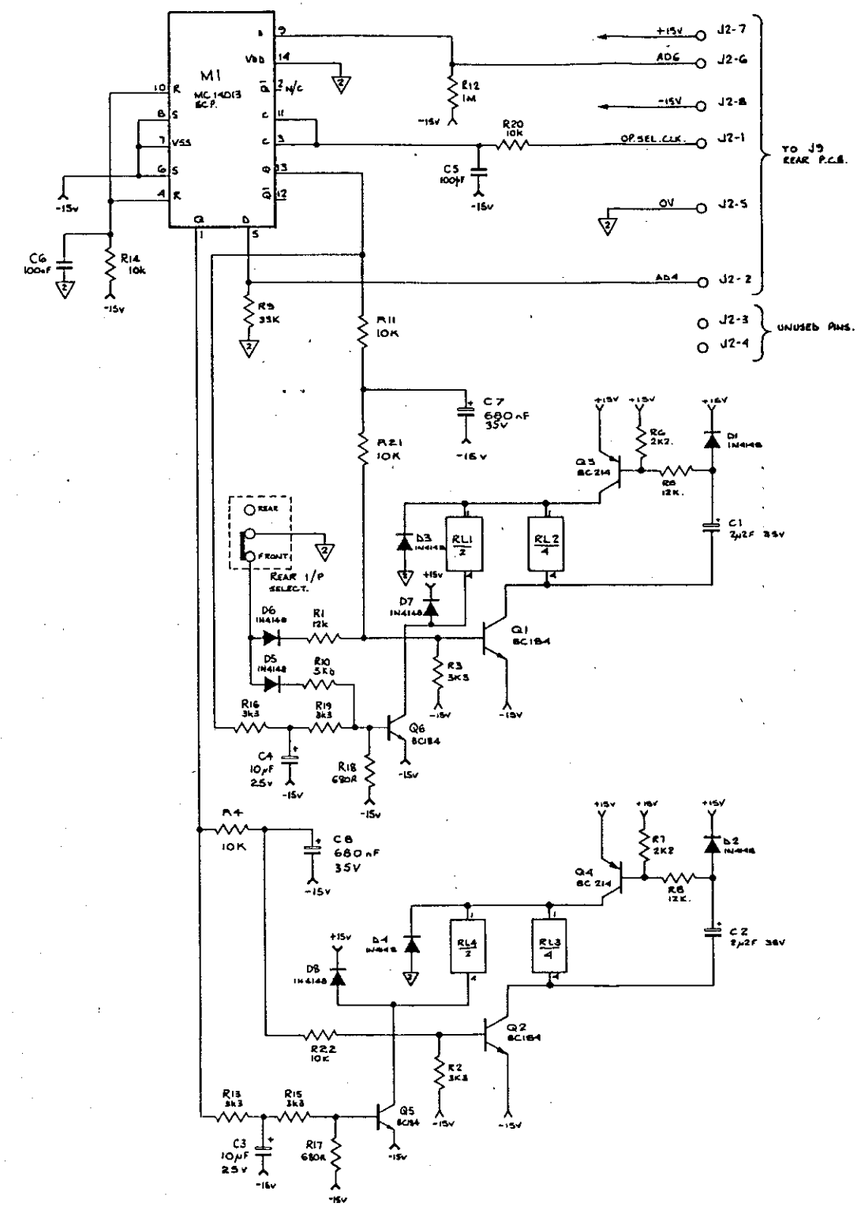

ISS.	CHANGES
1	RELEASED 26-3-79.
2	LK1 REPLACED BY R10. 10K. D5 DELETED. ECO 900/907 5 JUN 79 W.G.S.
3	ECO 961. 6-11-79. B.J. R9 WAS 33K. R10 " 10K. R11 & R12 ADDED D7 ADDED IC4 4093B/4 ADDED. D5 DELETED.
4	ECO 1051 & 1054. B.J. R14 WAS ADDED to J7-6 & M1-14. LK1 ADDED. R9 WAS 15K D7 & R10 DELETED. 2-1-80
5	ECO. 1085 BS. BETWEEN J4-1 & J5-1 REMOVED PINS OF J4 & J5 RE-NUMBERED FOR 4 WAY CONNECTORS 22.4.80
6	ECO. 1166. 1154 R1 WAS 18K R10. R13. R14. R15. R16. R17. R18. R19. R20. C3. C4. C5. C6. D5. D6. D7. D8. Q5. Q6. Added 26.9.80
7	ECO 1199 R10 WAS 12K JR 21.2.81
8	ECO 1329 C3 AND C4 WERE 6µ8F. R4 AND R11 WERE 18K. C7. C8. R21 AND R22 ADDED. JR 8-7-82.

DRAWN	CHECKED	DIMENSIONS IN	TOLERANCES	MATERIAL
B.J.		MILLIMETRES	INCH DIMENSIONS: DECIMAL TO 3 PLACES ± .005; DECIMAL TO 2 PLACES ± .010; FRACTIONAL ± 1/64; METRIC DIMENSIONS: DECIMAL TO 2 PLACES ± 1mm; DECIMAL TO 1 PLACE ± 2mm; WHOLE DIMENSIONS ± 4mm; UNLESS OTHERWISE STATED; ANGULAR ± ½°	
TRACED	APPROVED	SCALE		FINISH
DATE 9-3-79	DATE	NOT TO BE SCALED		

datron ELECTRONICS LTD. NORWICH.

TITLE: REAR INPUT / RATIO CIRCUIT.

DRAWING SIZE: A1

DRAWING No. 430307

SHEET 1 OF 1

DRAWING No.
400308.
FIRST USED ON 1061 – 1071

THIRD ANGLE PROJECTION

DRAWN IN ACCORDANCE WITH BS 308

ALL BURRS TO BE REMOVED

NOTES

ISS.	CHANGES
1	RELEASED. 27-DEC-78. W.G.S.
2	POSITION OF TAG ON M1 + M2 CORRECTED. D2 POSITION REVERSED. ECO. 907 20.6.79 IL.
3	PARTS LIST CHANGE TO R7 ECO. 945 10.9.79 IL.

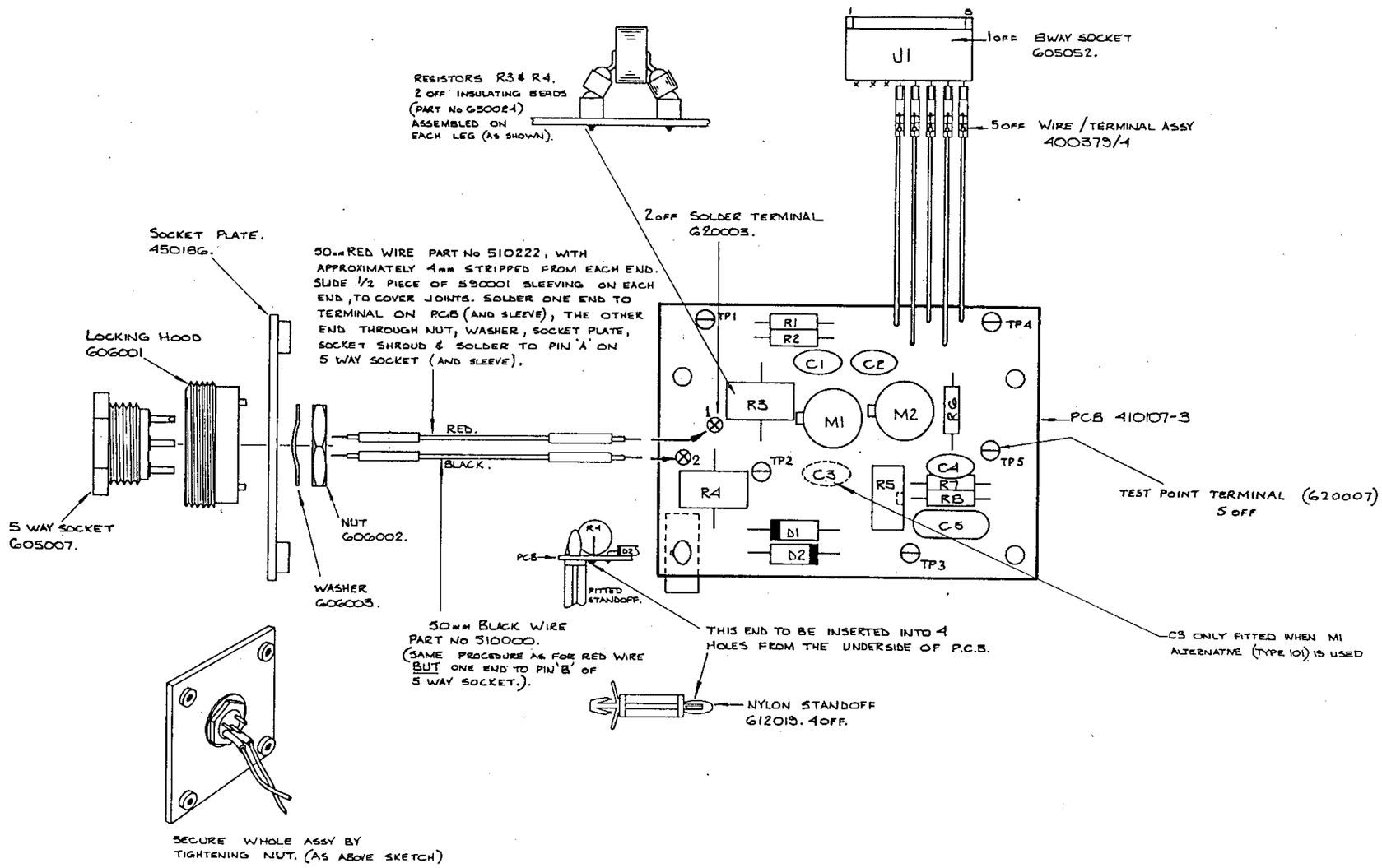

DRAWN	CHECKED	DIMENSIONS IN	TOLERANCES ANGULAR ± ½°	MATERIAL	datron ELECTRONICS LTD. NORWICH.	DRAWING SIZE
B.J.	29.12.78	MILLIMETRES	INCH DIMENSIONS: DECIMAL TO 3 PLACES ± .005; DECIMAL TO 2 PLACES ± .010; FRACTIONAL ± 1/64			A2
TRACED	APPROVED	SCALE 2:1 NOT TO BE SCALED	METRIC DIMENSIONS: DECIMAL TO 2 PLACES ± 1mm; DECIMAL TO 1 PLACE ± 2mm; WHOLE DIMENSIONS ∓ 4mm; UNLESS OTHERWISE STATED	FINISH	TITLE: ANALOGUE OUTPUT P.C.B ASSY. 1061/1071/1081	DRAWING No. 400308
DATE 27-11-78	DATE					SHEET 1 OF 4

DRAWING No.
430308
FIRST USED ON 1061 - 1071

THIRD ANGLE PROJECTION

DRAWN IN ACCORDANCE WITH BS 308

ALL BURRS TO BE REMOVED

NOTES

ISS.	CHANGES
1	RELEASED. 27-DEC-78. W.G.S.
2	R7 WAS 21K73 ECO. 945. 10.9.79 IL

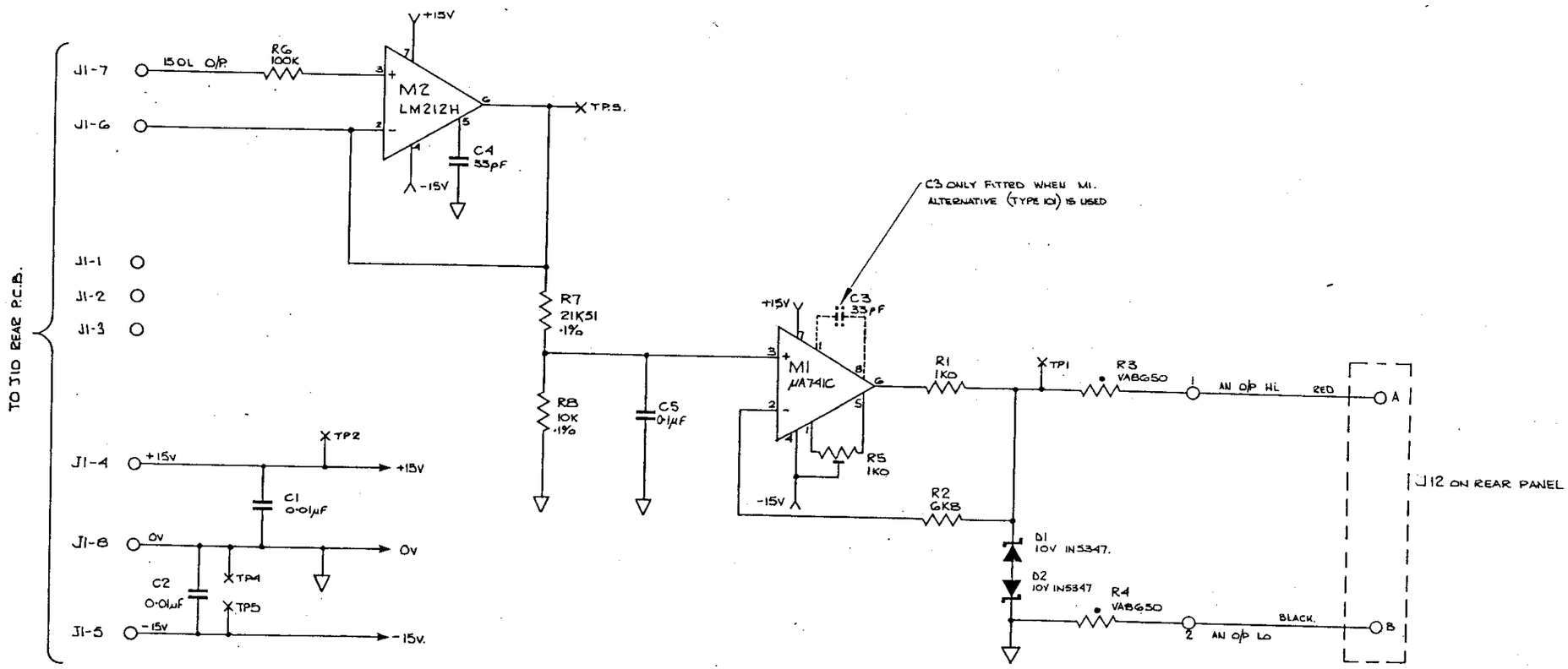

DRAWN	CHECKED	DIMENSIONS IN	TOLERANCES ANGULAR ± ½° INCH DIMENSIONS DECIMAL TO 3 PLACES ± ·005 DECIMAL TO 2 PLACES ± ·010 FRACTIONAL ± 1/64 METRIC DIMENSIONS DECIMAL TO 2 PLACES ± 1mm DECIMAL TO 1 PLACE ± 2mm WHOLE DIMENSIONS ± 4mm UNLESS OTHERWISE STATED	MATERIAL	datron ELECTRONICS LTD. NORWICH.	DRAWING SIZE
B.J.		—		—		A2
TRACED	APPROVED	MILLIMETRES		FINISH	TITLE	DRAWING No.
		SCALE		—	ANALOGUE OUTPUT CIRCUIT. 1061/1071/1081	430308
DATE 29-11-78	DATE	NOT TO BE SCALED				SHEET 1 OF 1

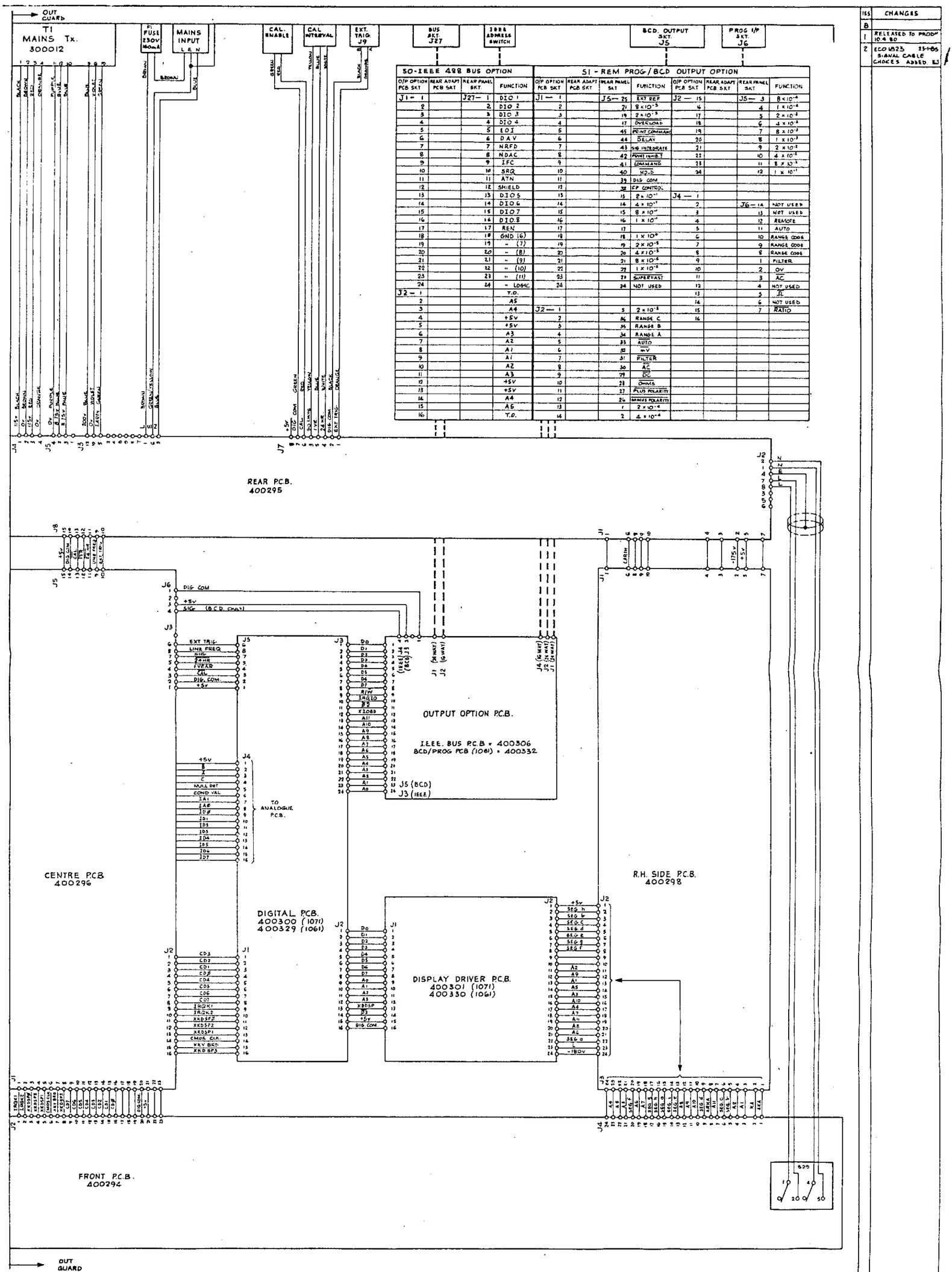

50-IEEE 488 BUS OPTION				51 - REM PROG/BCD OUTPUT OPTION							
O/P OPTION PCB SKT	REAR ADAPT PCB SKT	REAR PANEL SKT.	FUNCTION	O/P OPTION PCB SKT	REAR ADAPT PCB SKT	REAR PANEL SKT	FUNCTION	O/P OPTION PCB SKT	REAR ADAPT PCB SKT	REAR PANEL SKT	FUNCTION
J1 — 1		J27 — 1	DIO 1	J1 — 1		J5 — 25	EXT REF	J2 — 15		J5 — 3	8×10^{-4}
2		2	DIO 2	2		21	8×10^{-3}	16		4	1×10^{-4}
3		3	DIO 3	3		19	2×10^{-3}	17		5	2×10^{-3}
4		4	DIO 4	4		17	OVERLOAD	18		6	4×10^{-3}
5		5	EOI	5		45	POINT COMMAND	19		7	8×10^{-3}
6		6	DAV	6		44	DELAY	20		8	1×10^{-2}
7		7	NRFD	7		43	S/G INTEGRATE	21		9	2×10^{-2}
8		8	NDAC	8		42	POINT INHIBIT	22		10	4×10^{-2}
9		9	IFC	9		41	COMMAND	23		11	8×10^{-2}
10		10	SRQ	10		40	H2-D.	24		12	1×10^{-1}
11		11	ATN	11		39	DIS COM				
12		12	SHIELD	12		38	FP CONTROL				
13		13	DIO 5	13		13	8×10^{-1}	J4 — 1			
14		14	DIO 6	14		14	4×10^{-1}	2		J6 — 14	NOT USED
15		15	DIO 7	15		15	8×10^{-1}	3		13	NOT USED
16		16	DIO 8	16		16	1×10^{0}	4		12	REMOTE
17		17	REN	17		17		5		11	AUTO
18		18	GND (6)	18		18	1×10^{0}	6		10	RANGE CODE
19		19	" (7)	19		19	2×10^{-0}	7		9	RANGE CODE
20		20	" (8)	20		20	4×10^{-0}	8		8	RANGE CODE
21		21	" (9)	21		21	8×10^{-0}	9		1	FILTER
22		22	" (10)	22		22	1×10^{-0}	10		2	0V
23		23	" (11)	23		23	SUPERFAST	11		3	AC
24		24	" LOGIC	24		24	NOT USED	12		4	NOT USED
J2 — 1			T.O.					13		5	JL
2			A5					14		6	NOT USED
3			A4	J2 — 1		5	2×10^{-3}	15		7	RATIO
4			+5V	2		36	RANGE C	16			
5			+5V	3		35	RANGE B				
6			A3	4		34	RANGE A				
7			A2	5		33	AUTO				
8			A1	6		32	mV				
9			A0	7		31	FILTER				
10			A2	8		30	AC				
11			A3	9		29	DC				
12			+5V	10		28	OHMS				
13			+5V	11		27	PLUS POLARITY				
14			A4	12		26	MINUS POLARITY				
15			A5	13		1	2×10^{-4}				
16			T.O.	14		2	4×10^{-4}				

ISS	CHANGES
B	
1	RELEASED TO PRODN 10.4.80
2	ECO 16323 25-1-85 SIGNAL CABLE CHOICES ADDED

DRAWN	CHECKED	DIMENSIONS IN	TOLERANCES INCH DIMENSIONS: DECIMAL TO 3 PLACES ± .005; DECIMAL TO 3 PLACES ± .010; FRACTIONAL ± 1/64; ANGULAR ± 1°; METRIC DIMENSIONS: DECIMAL TO 2 PLACES ± 1mm; DECIMAL TO 1 PLACE ± 2mm; WHOLE DIMENSIONS ± 4mm; UNLESS OTHERWISE STATED	MATERIAL	datron ELECTRONICS LTD. NORWICH.	DRAWING SIZE
IL	MA	MILLIMETRES				A1
TRACED	APPROVED	SCALE —		FINISH	TITLE 1061/1071 INTERCONNECTION DIAGRAM.	DRAWING No. 430291 430326
DATE 31.1.79	DATE	NOT TO BE SCALED				SHEET 1 OF 2

430291 /430326.

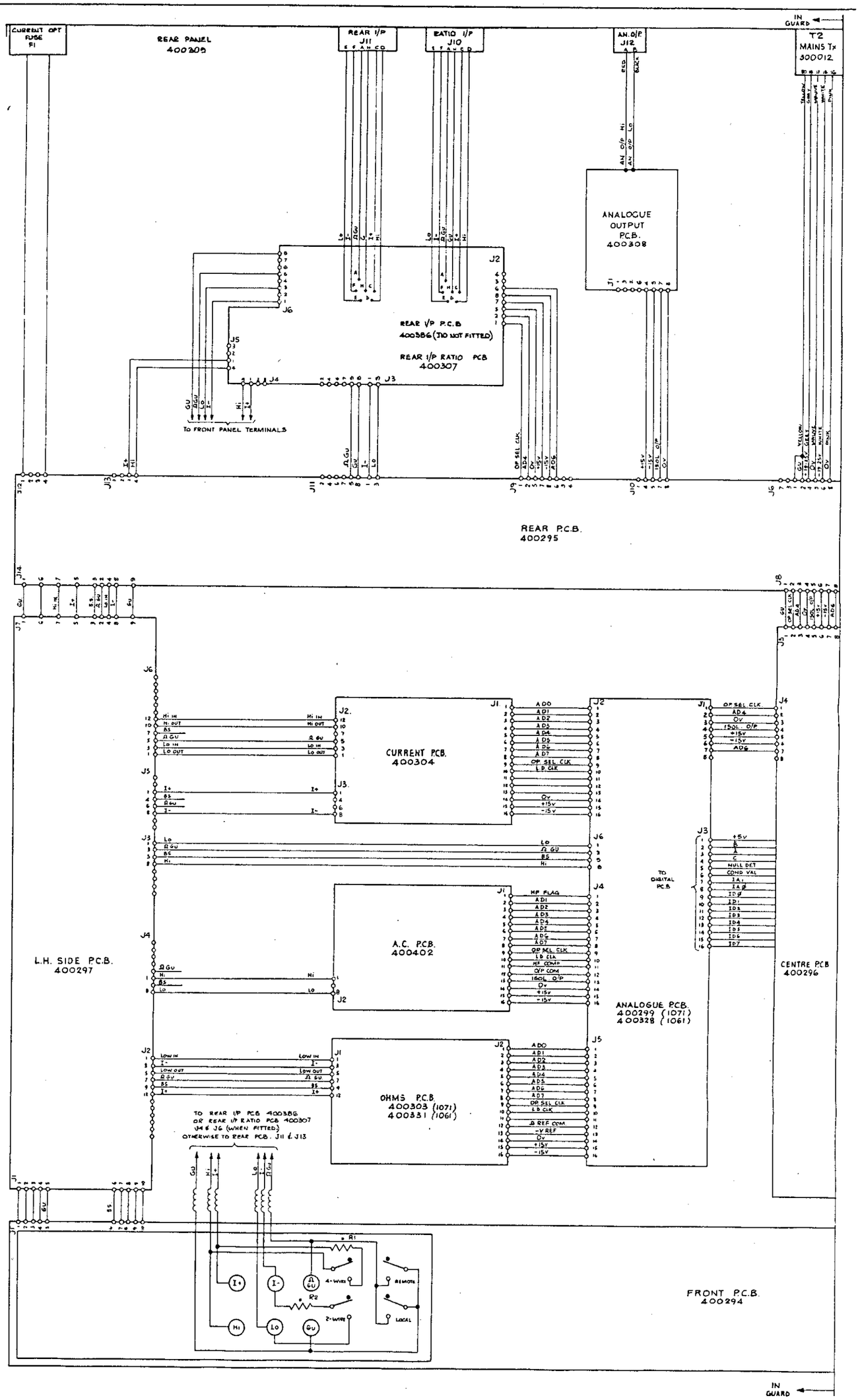

datron ELECTRONICS LTD. NORWICH.

DRAWING SIZE A

TITLE 1061/1071 INTERCONNECTION DIAGRAM

DRAWING No 430291/430326

SHEET 2 OF 2

DRAWING No. 400386

FIRST USED ON 1061/1071

THIRD ANGLE PROJECTION

DRAWN IN ACCORDANCE WITH BS 308

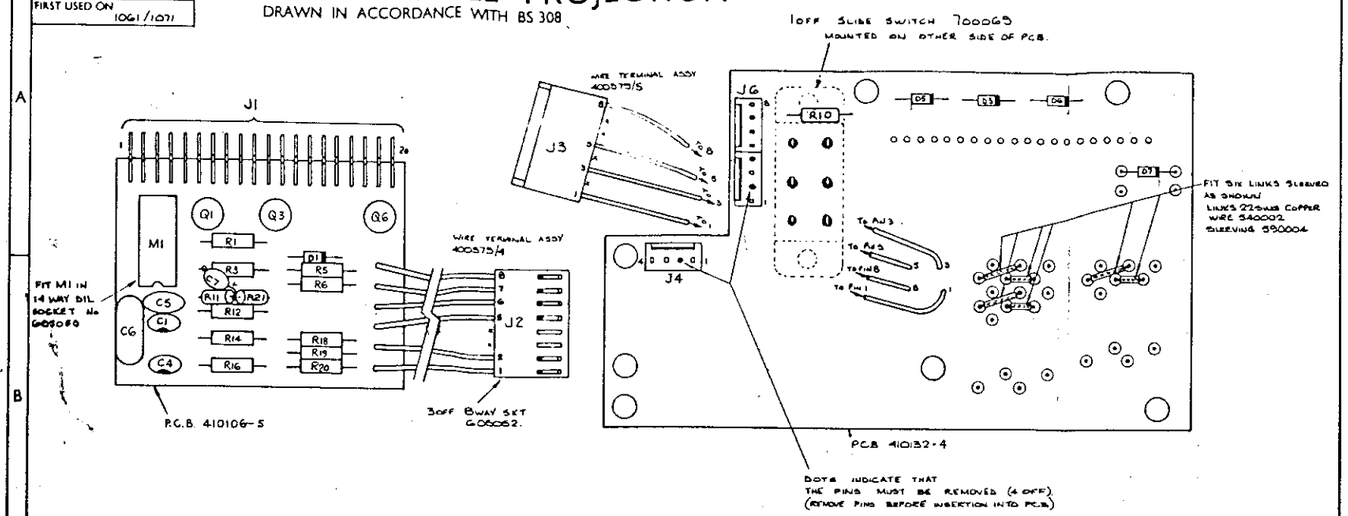

ALL BURRS TO BE REMOVED

NOTES

IMPORTANT.

FOR CRIMP PINS USE TOOL Nº HTR22G2A.

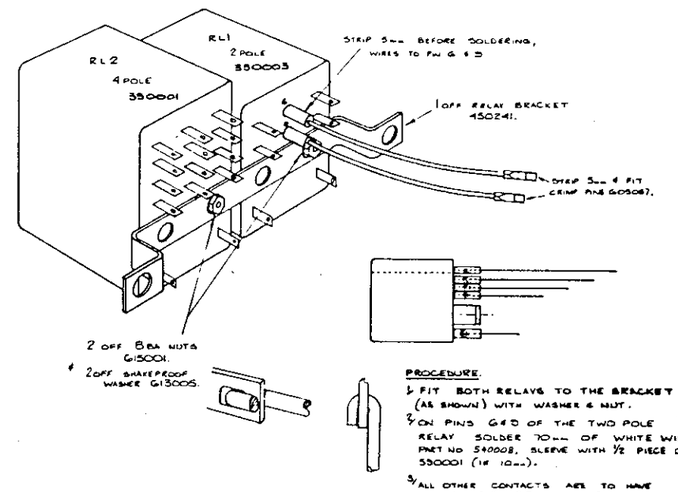

PROCEDURE.

1/ FIT BOTH RELAYS TO THE BRACKET (AS SHOWN) WITH WASHER & NUT.

2/ ON PINS 6 & 5 OF THE TWO POLE RELAY SOLDER 70mm OF WHITE WIRE PART NO 540008, SLEEVE WITH ½ PIECE OF 590001 (1# 10mm).

3/ ALL OTHER CONTACTS ARE TO HAVE APPROXIMATELY 60mm OF 22 SWG TINNED COPPER WIRE PART Nº 540002 & SLEEVE EACH WITH ½ PIECE OF 590001.

4/ STAGGER LENGTHS OF TINNED COPPER WIRE TO ASSIST FITTING TO PCB, AS SHOWN.

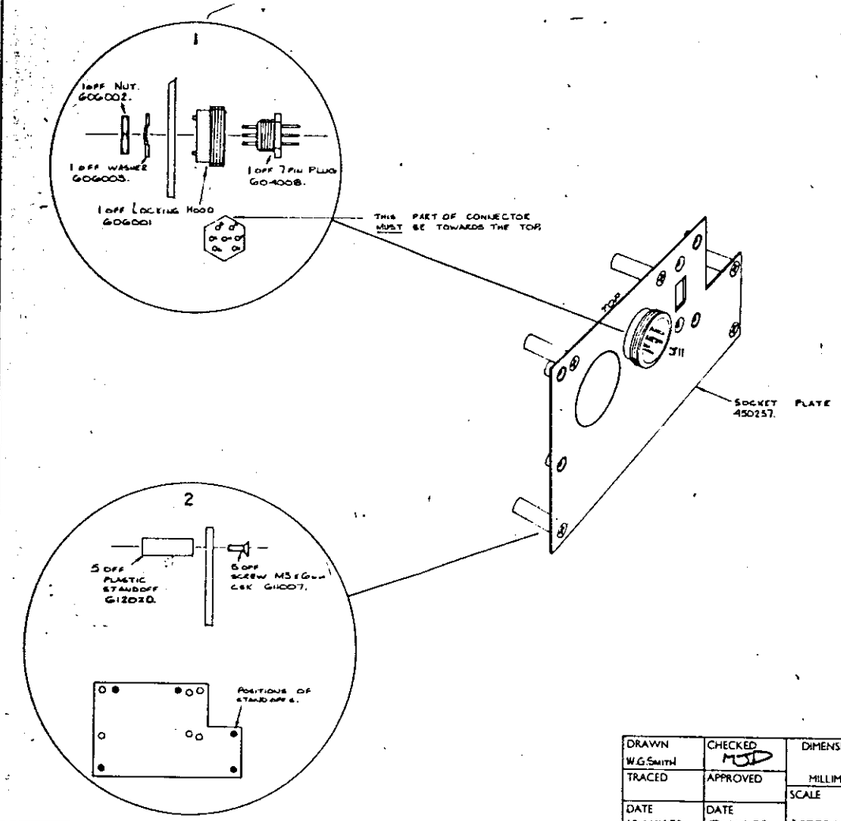

PROCEDURE

1/ ASSEMBLE THE 7 PIN PVC PLUG. FIRST & ENSURE THAT THE CONNECTOR IS SECURED IN THE POSITION SHOWN.

2/ ASSEMBLE THE 5 STANDOFF'S IN THE POSITION SHOWN BY THE LARGE DOTS.

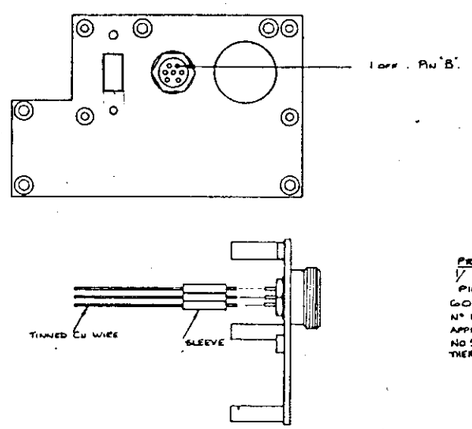

PROCEDURE

1/ ALL PINS ON THE SOCKET EXCEPT PIN 8 (SHOWN SOLID). SOLDER ON 60mm OF TINNED COPPER WIRE PART Nº 540002 & SLEEVE ALL JOINTS WITH APPROXIMATELY 10mm OF SLEEVING PART NO 590001.
THERE SHOULD NOW BE 8 WIRES.

SS.	CHANGES
1	RELEASED TO PRODUCTION 15.7.70
2	ECO 972 & 993. RL1 & RL2 WIRE ITT. 490257 WAS 450188 MALE PLUG 632001 DELETED. B.J. 21.10.70
3	ECO 1051. 6-11-70. R11 & R12 ADDED R14 & SOCKET ADDED. WIRE 400579/4 ADDED. DELETE D6. PCB'S UPGRADED. B.J.
4	ECO 1084. 5.1 R12 MOVED & WAS 33K. 2-1-80.
5	ECO 1085 POLARISING KEY FOR J3 REMOVED. J5 REMOVED - SEE SHEET 2. IL 22.4.80
6	ECO 1167, 1154 R10, R14, R16, R18, R19, R20 C4 C5 C6 D5 D6 D7 & Q6 ADDED. IL 23.9.80
7	ECO 1199 R10 WAS 12K. JR 24-2-81
8	ECO 1388 R11 WAS 8K, C4 WAS 6p8. R21 AND C7 ADDED. JR 12.5.82

DRAWN W.G.Smith	CHECKED MJD	DIMENSIONS IN MILLIMETRES	TOLERANCES ANGULAR ± ° NCH DIMENSIONS DECIMAL TO 3 PLACES ± .005 DECIMAL TO 2 PLACES ± .010 FRACTIONAL ± 1/64 METRIC DIMENSIONS DECIMAL TO 2 PLACES ± 1mm DECIMAL TO 1 PLACE ± 2mm WHOLE DIMENSIONS ± 4mm UNLESS OTHERWISE STATED	MATERIAL	datron ELECTRONICS LTD. NORWICH.
TRACED	APPROVED	SCALE NOT TO BE SCALED		FINISH	TITLE REAR INPUT ASSY
DATE 10-MAY-79.	DATE 17 MAY 79.				DRAWING SIZE A1 / DRAWING No. 400386 / SHEET 1 OF 8

DRAWING No 400386

FIRST USED ON 1061/71

THIRD ANGLE PROJECTION

DRAWN IN ACCORDANCE WITH BS 308

ALL BURRS TO BE REMOVED

NOTES

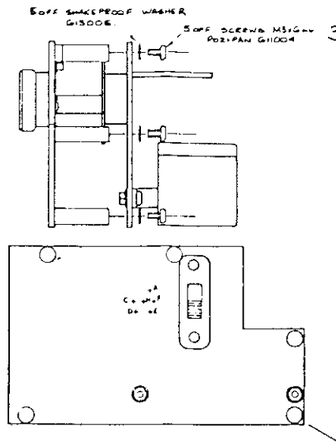

3/ BOTTOM VIEW SHOWS THE HOLES IN THE P.C.B. (INDICATED BY CROSSES). THESE HOLES ARE FOR THE WIRES FROM THE 7 PIN SOCKET.

IT IS A SUGGESTION THAT THE WIRES ARE STAGGERED TO MAKE ASSY EASIER (AS WIRING THE RELAYS).

PROCEDURE.

① THE WIRES SHOULD LINE UP WITH THE APPROPRIATE HOLES. IE WIRE FROM PIN A OF SOCKET SHOULD BE INSERTED INTO HOLE A, WIRE FROM PIN C TO HOLE C AND SO ON.

② WHEN THE WIRES ARE INSERTED IN THE APPROPRIATE HOLES. SECURE THE 2 ASSYS TOGETHER WITH THE M3 x 6mm POZI PAN SCREWS & SHAKEPROOF WASHERS, SCREWED IN THE 5 STANDOFFS. (AS DETAILED)

③ LIGHTLY PULL ON THE TWO COPPER WIRES SO THE WIRE IS TAUT, THEN SOLDER & CROP IN THE USUAL MANNER.

2/ INSERT CONNECTORS AS SHOWN. SOLDER ALL 20 AMP PINS & CROP LEGS IN USUAL MANNER.
THE BOARD IS TO BE AT 90° WHEN SOLDERED IN.

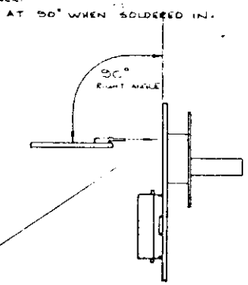

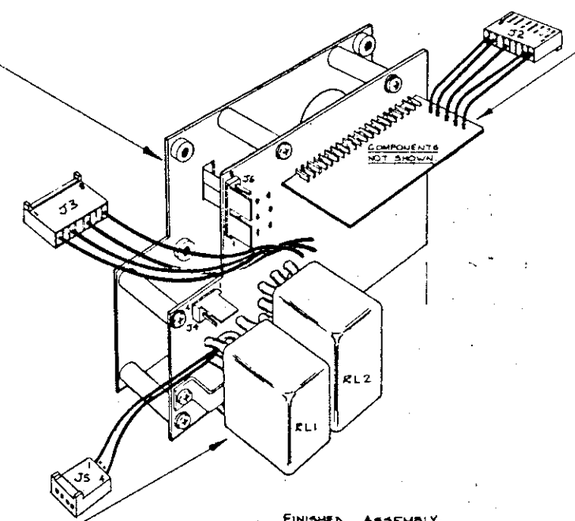

FINISHED ASSEMBLY.

1/ SKETCH BELOW SHOWS THE 2 RELAY & BRACKET ASSEMBLY (FROM SHEET 1). THE CROSSES INDICATE HOLES IN THE PCB INTO WHICH THE WIRES FROM THE RELAYS ARE INSERTED.

PROCEDURE

① INSERT THE WIRES INTO THE APPROPRIATE HOLES IN THE PCB (WIRES CUT AT DIFFERENT LENGTHS TO AID ASSEMBLY).

② WHEN THE WIRES ARE ALL IN PLACE SECURE THE BRACKET TO THE PCB USING THE SCREWS, WASHERS & NUTS SHOWN BELOW.

③ SOLDER & CROP WIRES IN THE USUAL MANNER. INSERT THE CRIMP PINS INTO SOCKET J5 PIN 6 OF RELAY TO PIN 4 OF J5 & PIN 5 TO PIN 1 AS SHOWN BELOW.

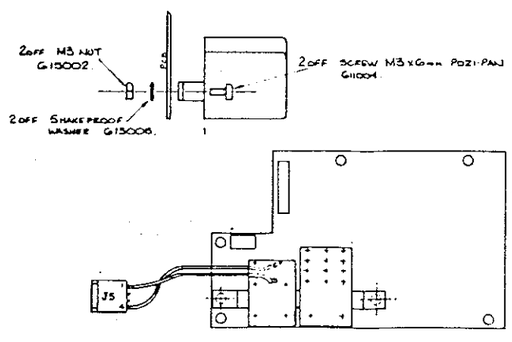

DRAWN W.G.SMITH	CHECKED MJD	DIMENSIONS IN MILLIMETRES	TOLERANCES ANGULAR ± ½° INCH DIMENSIONS DECIMAL TO 3 PLACES ± .005 DECIMAL TO 2 PLACES ± .010 FRACTIONAL ± 1/64 METRIC DIMENSIONS DECIMAL TO 2 PLACES ± 1mm DECIMAL TO 1 PLACE ± 2mm WHOLE DIMENSIONS ± 4mm UNLESS OTHERWISE STATED	MATERIAL —	datron ELECTRONICS LTD. NORWICH.	DRAWING SIZE A1
TRACED	APPROVED	SCALE NOT TO BE SCALED		FINISH —	TITLE REAR INPUT ASSY	DRAWING No. 400386 / SHEET 2 OF 8
DATE 10 MAY 79.	DATE 11 MAY 79.					

6	PLANNED TO PRODUCTION 17 MAY 79.	
1	SEE SHEET 1 & J	
2	28-10-79.	
3	SEE SHEET 1 & 2 7-8-80	
4	SEE SHEET 1. 2-1-80	
5	ECO. 1065 J5 WAS 9 WAY CONN. 22.4.80	
6	SEE SHEET 1 23.9.80	
7	SEE SHEET 1 8.6.81	
8	SEE SHEET 1 18.5.82	

DRAWING No.	
430386	
FIRST USED ON	
1061/1071	

THIRD ANGLE PROJECTION

DRAWN IN ACCORDANCE WITH BS 308

ALL BURRS TO BE REMOVED

NOTES

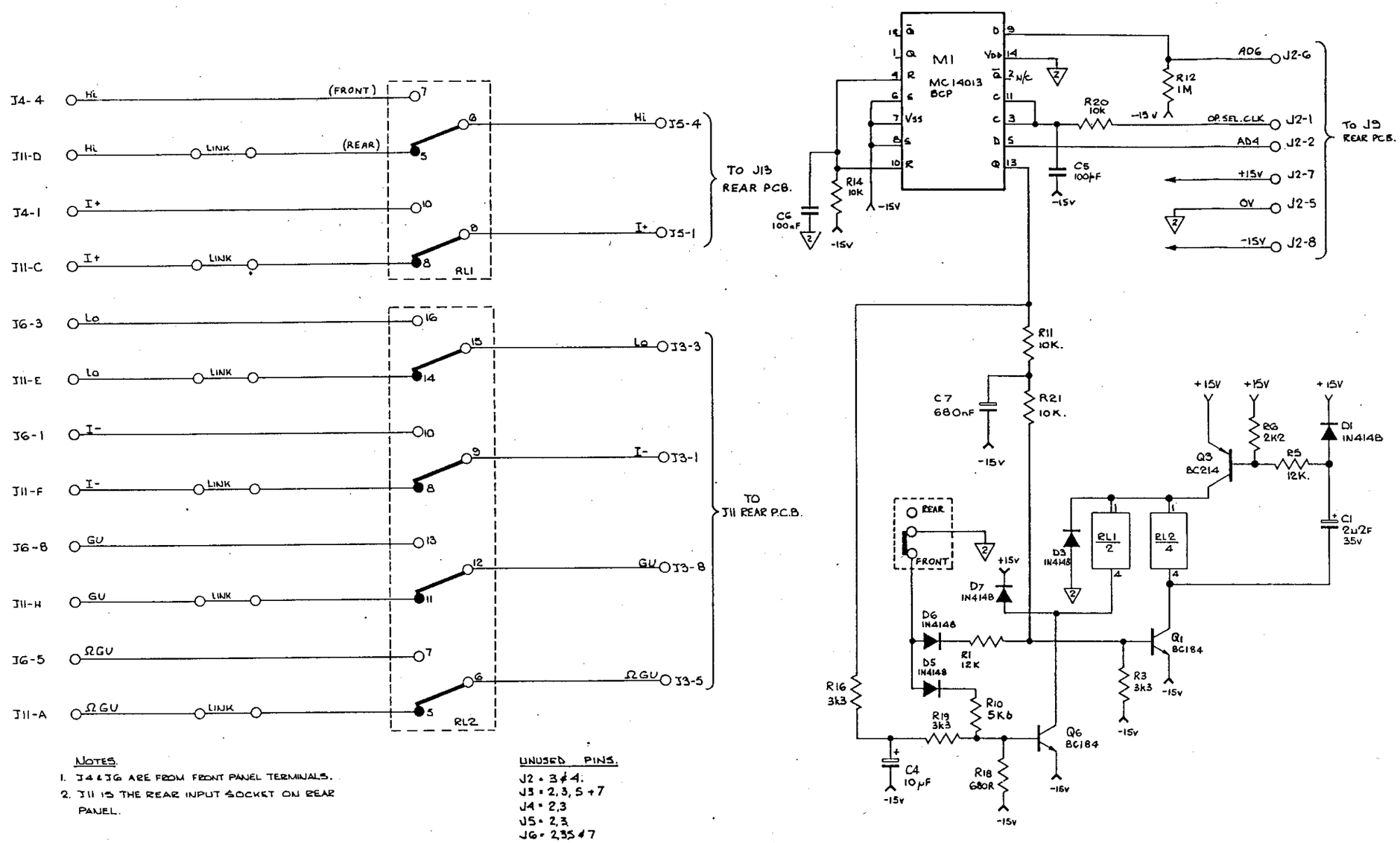

NOTES.

1. J4 & J6 ARE FROM FRONT PANEL TERMINALS.
2. J11 IS THE REAR INPUT SOCKET ON REAR PANEL.

UNUSED PINS.

J2 = 3 & 4.
J3 = 2, 3, 5 + 7
J4 = 2, 3
J5 = 2, 3
J6 = 2, 3, 5 & 7

ISS.	CHANGES
A	
1	RELEASED TO PRODUCTION 17-MAY-79 W.G.S.
2	ECO 9861. B.J. M1 ADDED R11 " R12 " D5 DELETED. 6-11-79
3	ECO 1034. B.J. R12 WAS JOINED BETWEEN J2-6 & M1-14. 2-1-80.
4	ECO.1085 BS – BETWEEN J4-1 & J5-1 REMOVED. PINS. OF J4 & J5 RE-NUMBERED FOR 4WAY CONNECTORS. 22.4.80
5	ECO. 1167, 1154, R1 WAS 18K. R10, R14, R16, R18, R20, C4, C5, C6, D5, D6, D7 & Q6 ADDED. 23.9.80
6	ECO 1199 R 10 WAS 12 K JR 24.2.81
7	ECO 1328 C4 WAS 6u8F R11 WAS 18K R21 AND C7 ADDED. JR 13.5.82

DRAWN	CHECKED	DIMENSIONS IN	TOLERANCES ANGULAR ± ½°
W.G.SMITH		MILLIMETRES	INCH DIMENSIONS DECIMAL TO 3 PLACES ± .005; DECIMAL TO 2 PLACES ± .010; FRACTIONAL ± 1/64
TRACED	APPROVED	SCALE	METRIC DIMENSIONS DECIMAL TO 2 PLACES ± 1mm; DECIMAL TO 1 PLACE ± 2mm; WHOLE DIMENSIONS ± 4mm
DATE 8 MAY 79	DATE 17 MAY 79	NOT TO BE SCALED	UNLESS OTHERWISE STATED

MATERIAL ——

FINISH ——

datron ELECTRONICS LTD. NORWICH.

TITLE REAR INPUT CIRCUIT DIAGRAM.

DRAWING No. 430386

DRAWING SIZE A2

SHEET 1 OF 1.

DRAWING No. 400402

FIRST USED ON 1061/1071

THIRD ANGLE PROJECTION

DRAWN IN ACCORDANCE WITH BS 308

ALL BURRS TO BE REMOVED

NOTES

1. DO NOT FIT R7 FOR 1061 MODELS.

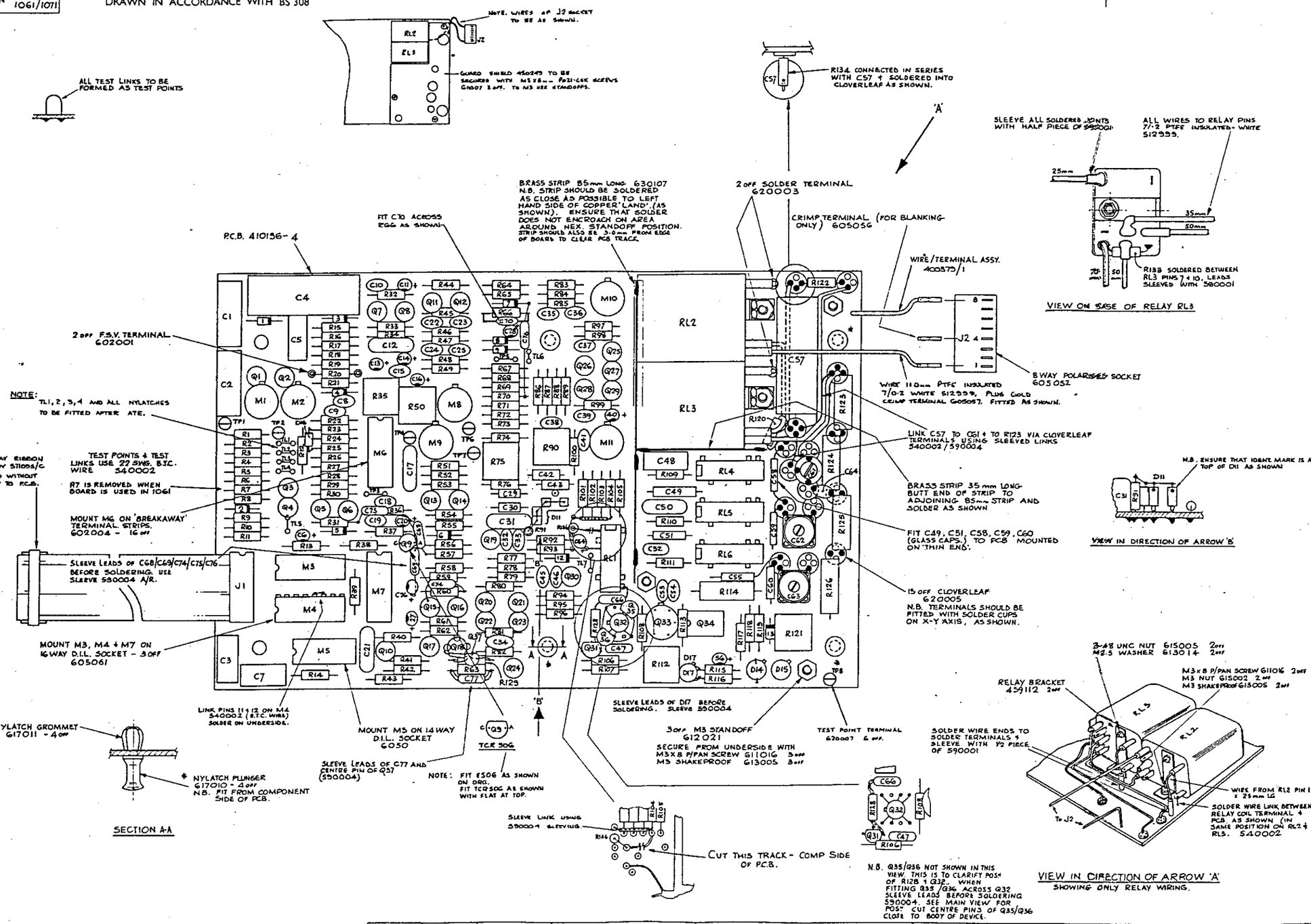

ISS.	CHANGES
1	RELEASED TO PROD^N IL 17.3.79
2	ECO. 956 & 957 PARTS LIST CHANGES IL 8.10.79
3	ECO. 972, 979, 987, 993, 996. RL2 & RL3 WERE 1TT. RELAY WIRE WAS P.V.C. R11 WAS 120K D18 WAS OA47 R127 .100M. ADDED R.J. 25-10-79
4	ECO. 999, 1007 PARTS LIST CHANGES R128, C65, C66 & D16 ADDED IL 31.10.79
5	ECO 1010. WIRE TRIM ASSY WERE 400379/2 & 400379/5. NO SHIELD SYSTEM AMND. RJ. 5-11-79.
6	ECO 1016, 1020, 1036 C65 & D16 REMOVED D20 REPLACED BY C67 FITTED IN PARALLEL WITH R129. VALUE CHANGES TO FL. IL 2.1.80
7	ECO. 1059 C68, C69 ADDED. SCREWS TO SECURE GUARD SHIELD WERE 3 OFF 611015 IL 24.1.80
8	ECO 1069. R70 WAS 680K 1000681 C70 33pF 1013300 ADDED W.E.S. 18-2-80
9	ECO. 1082 PARTS LIST CHANGES IL 27.2.80
10	ECO. 1112, 1095, 1113 C71 R130 ADDED J2-4 WAS 605057 PTs LT. CHANGE TO R50 IL 14.4.80
11	ECO. 1133 D17 ADDED. IL 13.6.80
12	ECO. 1160 C72 & R132 ADDED IL 24.9.80
13	ECO. 1190 PARTS LIST CHANGES IL 3.1.81
14	ECO. 1201, 1207 C54 & C72 DELETED. R136 ADDED. OTHER PARTS LIST CHANGES. IL 5.4.81
15	ECO 1217 J1 WAS 16 WAY SOCKET. JR 19-6-81
16	ECO. 1352 C67 C71 & R130 DELETED. C34 C74 D18 & D19 ADDED. C43 WAS 12pF C46 WAS 6p8F. D17 CATHODE WAS SOLDERED D14 ANODE IL 7.3.82
17	ECO. 1425 C75 & C76 ADDED D13 WAS 1N4148 R118 WAS 82K R36 WAS 1M2 IL 25.11.82
18	ECO 1446 R127 & R136 DELETED R54, R104 & R105 VALUE CHANGE B.J. 16-2-83
19	ECO. 1596 SLEEVE 590002 ADDED TO D18/D19 IL 6.3.84
20	ECO. 1622, 1626. - R73 WAS 120K R101 WAS 220R R136 WAS 27k Q35/Q36 WERE D18/D19 RESP (HASBA) RE-POSITIONED AS WITH D17 IL 2.5.84
21	ECO 1642. R70 WAS 220K NOM E.36 + 750K TL1,2,3 & 4 NYLATCH NOW FITTED AFTER ATE B.J. 11-6-84.
22	ECO. 1730 C77 & Q37 ADDED R129 WAS 2k2 R63 WAS 2k2 R115 WAS 8k2 IL 23.10.84

DRAWN IL	CHECKED R.P.W.	DIMENSIONS IN MILLIMETRES	TOLERANCES INCH DIMENSIONS: DECIMAL TO 3 PLACES ± .005; DECIMAL TO 2 PLACES ± .010; FRACTIONAL ± 1/64; METRIC DIMENSIONS: DECIMAL TO 2 PLACES ± 1mm; DECIMAL TO 1 PLACE ± 2mm; WHOLE DIMENSIONS ± 4mm; UNLESS OTHERWISE STATED; ANGULAR ±½°	MATERIAL AS PARTS LIST	datron ELECTRONICS LTD. NORWICH.
TRACED	APPROVED			FINISH ——	TITLE A.C. PCB. ASSY. (OPTION 10) 1061/1071
DATE 22.8.79	DATE 3.9.79	SCALE 2:1 NOT TO BE SCALED			DRAWING SIZE A1

DRAWING No. 400402 — SHEET 1 OF 17

DRAWING No. 430402

FIRST USED ON 1061/1071

THIRD ANGLE PROJECTION

DRAWN IN ACCORDANCE WITH BS 308

ALL BURRS TO BE REMOVED

NOTES

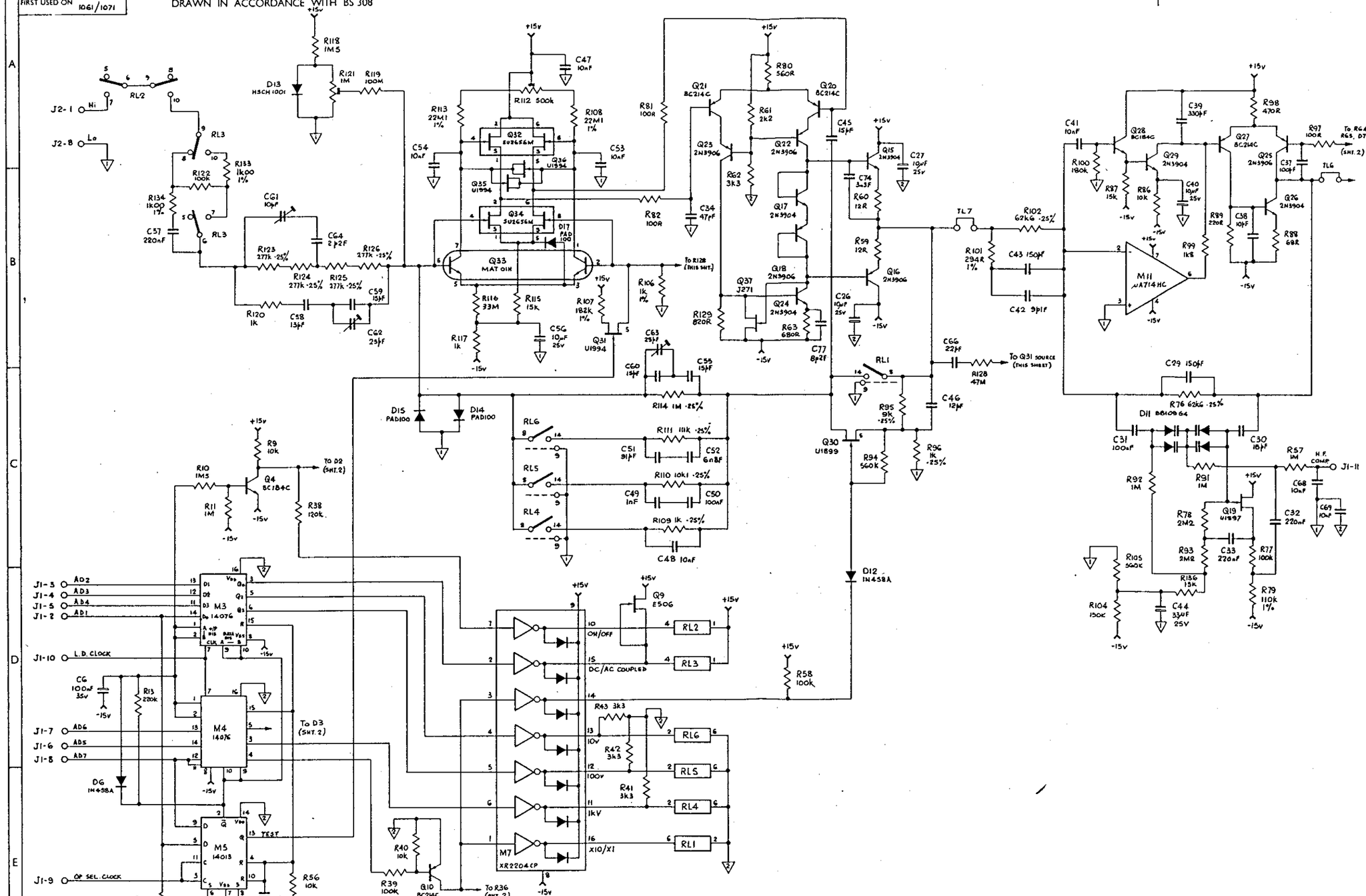

ISS.	CHANGES
1	RELEASED TO PRODN IL 17.9.79
2	ECO.956, 957 R10 WAS 220K R11 WAS 18k R18 WAS 33k C6 WAS 680nF SEE ALSO SHEET 2 IL 8.10.79
3	ECO.993, 996. R11 WAS 120K. R127 100M ADDED D13 WAS OA47 B.J. 24-10-79
4	ECO.999, 1007 R117 WAS 100R M4/11 & 12 LINKED C44 WAS 1µF C56 WAS 10µF C54 WAS 10µF C46 WAS 2p2F C63 & C66 ADDED R91 WAS 100R R92 WAS 1K R128 ADDED SEE ALSO SHT. 2 IL 1.11.79
5	ECO.1011, 1016, 1036. C45 WAS 3p3F. C46 WAS 10pF. C54 WAS 27µF TANT. C65 REMOVED. C66 WAS 220pF. R128 WAS 15M. R81, R82 WERE 330R C56 WAS 100µF. D10 REMOVED. C67, R129 ADDED. R106 WAS 10k. R105 WAS 68k. C64 WAS 3p3F. IL 2.1.80
6	ECO.1058 C68 & C69 ADDED IL 23.1.80
7	ECO 1069 SEE SHEET 2. IL 15.2.80
8	SEE SHEET 2
9	ECO. 1112, 1113 C71, R130, R133, R134 ADDED SEE ALSO SHEET 2 IL 14.4.80
10	ECO.1135. D17 ADDED. IL 13.6.80.
11	ECO.1160 R135 & C72 ADDED
12	ECO.1190 D11 WAS MUAM-E C30 WAS 15pF IL 3.1.80
13	ECO.1201, 1207 C34 & C72 DELETED R136 ADDED C35 WAS 100pF C44 WAS 10µF C45 WAS 10pF C46 WAS 8p2F R79 WAS 110k Q28 WAS 2N3904 IL 8.4.81
14	ECO. 1392 R130, C67, C71 DELETED C34, C74, D16 & D13 ADDED. C45 WAS 12pF. C46 WAS 6p8F. D17 WAS CONNECTED TO Q33 PIN 6. (I.E. D17 CATHODE PIN 6) IL 8.9.82
15	ECO. 1428 R118 WAS 82k D13 WAS 1N4148 SEE ALSO SHT. 2. IL 25.11.82
16	ECO 1449G. R187 & C159 DELETED R94 WAS 270K R104 - 1GK R105 - 82K. B.J. 18-2-83
17	ECO. 1622, 1626 Q35 & Q36 WERE D18/D19 BESI (1N4148) D17 WAS FITTED FROM Q33 PIN 5 TO R79 WAS 120k R101 WAS 270R R136 WAS 27k IL 2.5.84
18	SEE SHEET 2.
19	ECO. 1730 C77 & Q37 ADDED. R63 WAS 2k2 R115 WAS 8k2 R129 WAS 2k2 IL 23.10.84

DRAWN IL	CHECKED R.J.W.	DIMENSIONS IN MILLIMETRES	TOLERANCES ANGULAR ± ° INCH DIMENSIONS DECIMAL TO 3 PLACES ± .005 DECIMAL TO 2 PLACES ± .010 FRACTIONAL ± 1/64 METRIC DIMENSIONS DECIMAL TO 2 PLACES ± 1mm DECIMAL TO 1 PLACE ± 2mm WHOLE DIMENSIONS ± 4mm UNLESS OTHERWISE STATED
TRACED	APPROVED	SCALE —	MATERIAL —
DATE 20.8.79	DATE 2.9.79	NOT TO BE SCALED	FINISH —

datron ELECTRONICS LTD. NORWICH.

TITLE 1061/1071 AC - PREAMP.

DRAWING SIZE A1

DRAWING No. 430402

SHEET 1 OF 2

DRAWING No. 430402

FIRST USED ON

THIRD ANGLE PROJECTION

DRAWN IN ACCORDANCE WITH BS 308

ALL BURRS TO BE REMOVED

NOTES

1. RESISTOR R7 IS NOT FITTED ON A.C. ASSEMBLIES USED IN 1061's INSTRUMENTS.

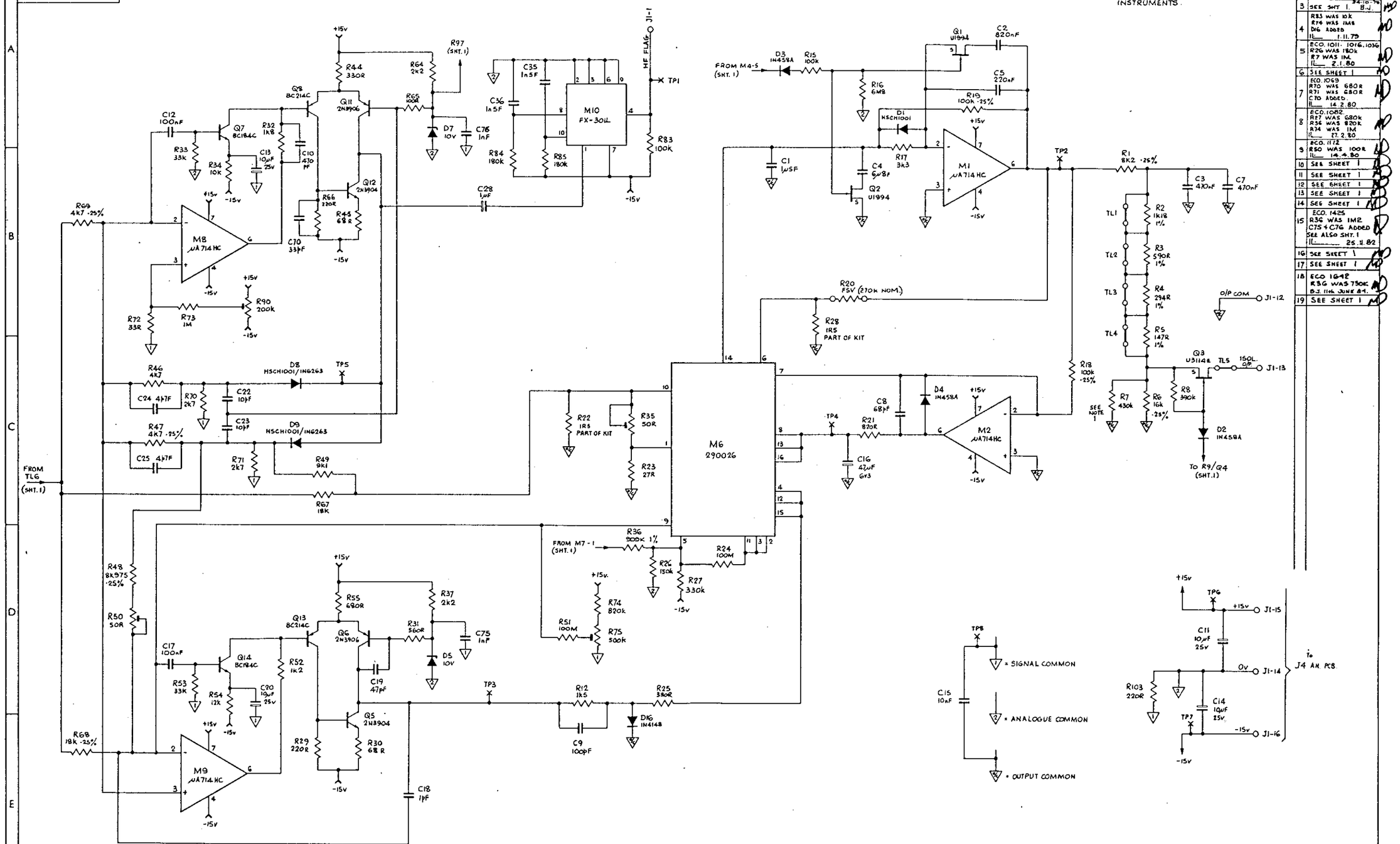

ISS.	CHANGES
1	RELEASED TO PRODN IL 17.9.79
2	ECO 956. C2 WAS 680nF IL 8.10.79
3	SEE SHT 1 24-10-79 B.J.
4	R33 WAS 10k R74 WAS 1M8 D6 ADDED IL 1.11.79
5	ECO. 1011, 1016, 1036 R26 WAS 180k R7 WAS 1M. IL 2.1.80
6	SEE SHEET 1
7	ECO. 1069 R70 WAS 680R R71 WAS 680R C70 ADDED IL 14.2.80
8	ECO. 1082. R27 WAS 680k R36 WAS 820K R74 WAS 1M IL 27.2.80
9	ECO. 1172 R50 WAS 100R IL 14.4.80
10	SEE SHEET 1
11	SEE SHEET 1
12	SEE SHEET 1
13	SEE SHEET 1
14	SEE SHEET 1
15	ECO. 1425 R3G WAS 1M2. C7S + C7G ADDED SEE ALSO SHT. 1 IL 26.4.82
16	SEE SHEET 1
17	SEE SHEET 1
18	ECO 1648 R3G WAS 750K B.J. 11th JUNE 84.
19	SEE SHEET 1

DRAWN	CHECKED	DIMENSIONS IN	TOLERANCES	MATERIAL
IL	RJ 40	MILLIMETRES	INCH DIMENSIONS: DECIMAL TO 3 PLACES ± .005; DECIMAL TO 2 PLACES ± .010; FRACTIONAL ± 1/64; METRIC DIMENSIONS: DECIMAL TO 3 PLACES ± 1mm; DECIMAL TO 1 PLACE ± 2mm; WHOLE DIMENSIONS ± 4mm; UNLESS OTHERWISE STATED	
TRACED	APPROVED	SCALE —	ANGULAR ± °	FINISH —
DATE 20.8.79	DATE 3.9.79	NOT TO BE SCALED		

datron ELECTRONICS LTD. NORWICH.

TITLE: 1061/1071 A.C. RMS SECTION.

DRAWING SIZE: A1

DRAWING No. 430402

SHEET 2 OF 2

DRAWING No. 400427

FIRST USED ON

THIRD ANGLE PROJECTION

DRAWN IN ACCORDANCE WITH BS 308

ALL BURRS TO BE REMOVED

NOTES

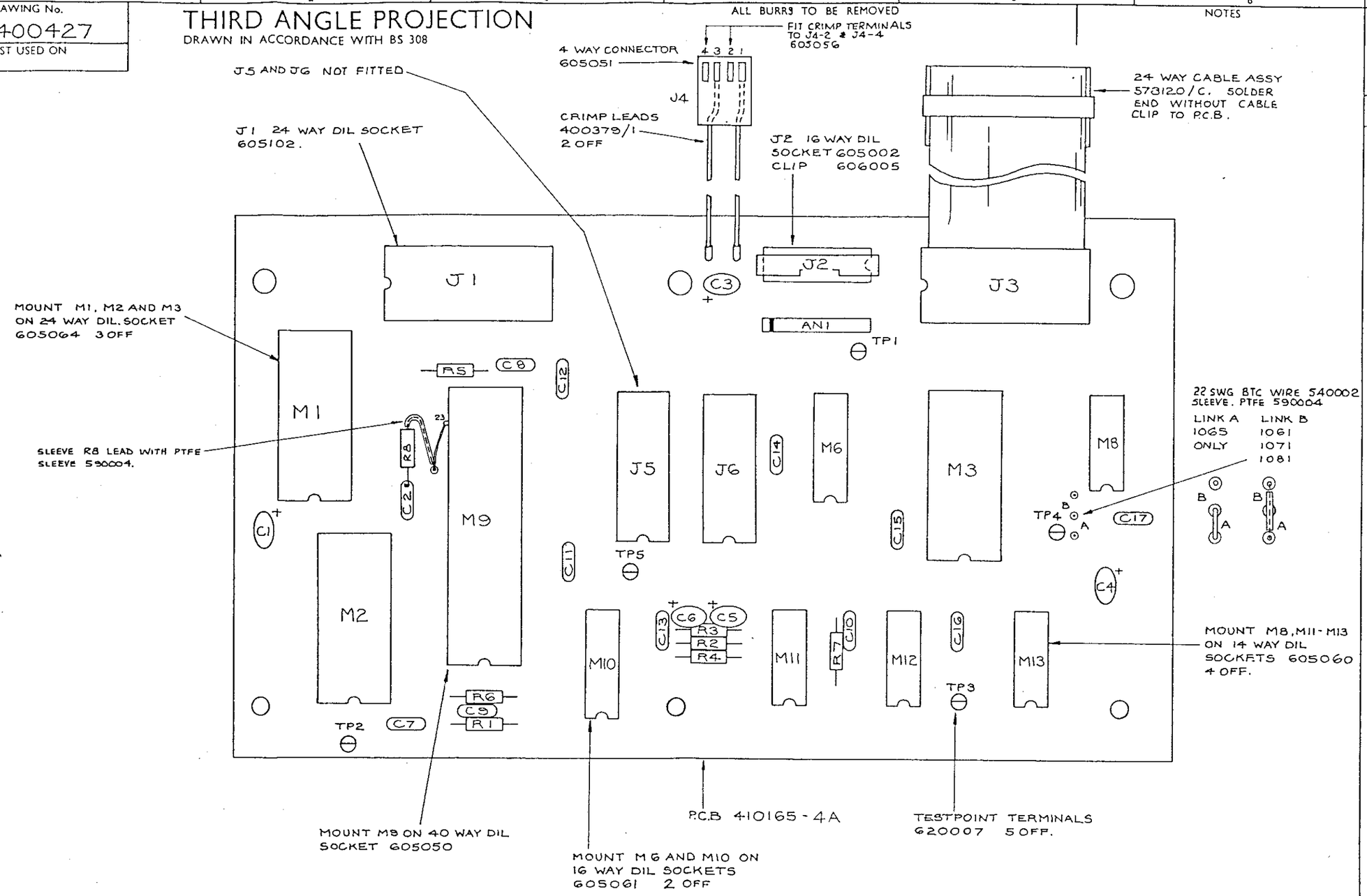

ISS.	CHANGES
9	ECO. 1538.1588 3 NYLATCHES REMOVED. P.C.B WAS ISS 2 C7 WAS 10µF TANT C2 WAS 10nF CD. C11-C17 ADDED. 28.2.84
10	ECO 1681 R8 ADDED. BJ. 26-7-84.

DRAWN JR	DATE 5·10·83	DIMENSIONS IN MILLIMETRES	METRIC DIMENSIONS ANGULAR ± ½° DECIMAL TO 2 PLACES ± ·1mm DECIMAL TO 1 PLACE ± ·2mm WHOLE DIMENSIONS ± ·4mm UNLESS OTHERWISE STATED	MATERIAL —	datron ELECTRONICS LTD. NORWICH.
CHKD.	DATE	SCALE 2:1 NOT TO BE SCALED		FINISH —	TITLE IEEE P.C.B ASSY 1065 1061 1071 1081
APPD.	DATE				

DRAWING SIZE A2

DRAWING No. 400427

SHEET 1 OF 5

DRAWING No. 430427

FIRST USED ON 1065

THIRD ANGLE PROJECTION

DRAWN IN ACCORDANCE WITH BS 308

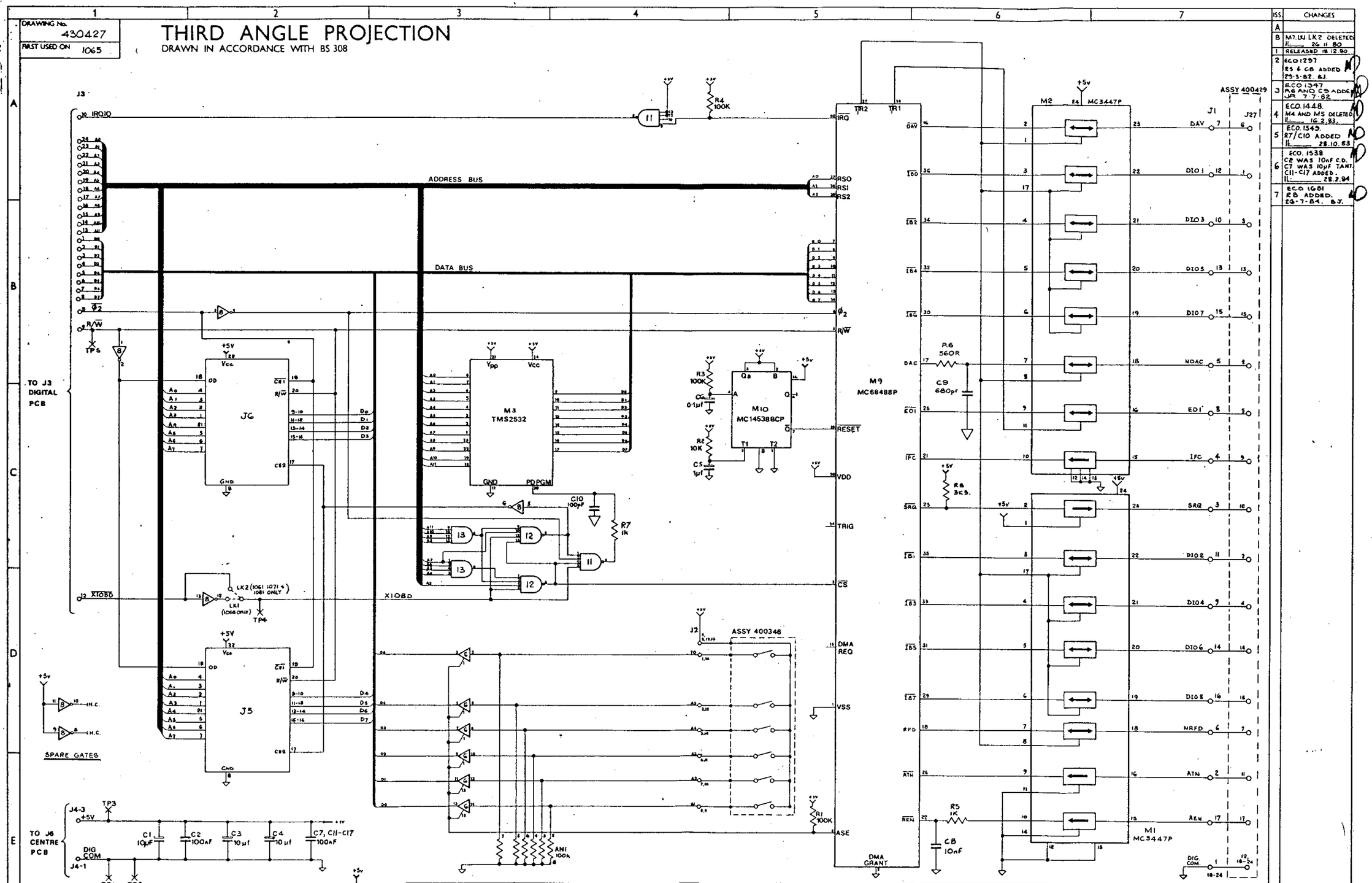

ISS.	CHANGES
A	
B	M7, IX, LK2 DELETED. IL 26 11 80
1	RELEASED 18.12.80.
2	ECO 1297. R5 & C8 ADDED. 29.5.82. B.J.
3	ECO 1347. R6 AND C9 ADDED. JR 7.7.82
4	ECO 1448. M4 AND M5 DELETED. IL 16.2.83.
5	ECO 1543. R7/C10 ADDED. IL 28.10.83
6	ECO 1538. C2 WAS 10nF C.D. C7 WAS 10µF TANT. C11-C17 ADDED. IL 28.2.84
7	ECO 1681. R8 ADDED. 20-7-84. B.J.

DRAWN IL	CHECKED D. NELSON	DIMENSIONS IN MILLIMETRES	TOLERANCES: INCH DIMENSIONS — DECIMAL TO 3 PLACES ± .005; DECIMAL TO 2 PLACES ± .010; FRACTIONAL ± 1/64; METRIC DIMENSIONS — DECIMAL TO 2 PLACES ± 1mm; DECIMAL TO 1 PLACE ± 2mm; WHOLE DIMENSIONS ± 4mm; UNLESS OTHERWISE STATED; ANGULAR ± ½°
TRACED	APPROVED	SCALE	MATERIAL
DATE 14 10 80	DATE	NOT TO BE SCALED	FINISH

datron ELECTRONICS LTD. NORWICH.

TITLE: IEEE 488 OPTION CIRCUIT DIAGRAM 1065. 1061. 1071. 1081

DRAWING No. 430427

SHEET 1 OF 1
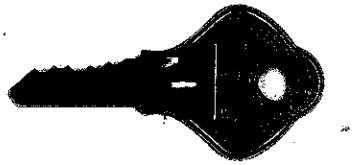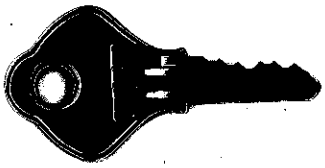
DRAWING SIZE A1