datron

SERVICING MANUAL
for
DATRON MODEL 1059
DIGITAL MULTIMETER

METEOR CLOSE
NORWICH AIRPORT INDUSTRIAL ESTATE NORWICH NR6 6HQ ENGLAND

SERVICING MANUAL
for
DATRON MODEL 1059
DIGITAL MULTIMETER

(FOR GENERAL INFORMATION
AND SPECIFICATION REFER TO
OPERATING MANUAL)

Instrument Designed and Manufactured by:–
DATRON ELECTRONICS LTD.,
METEOR CLOSE,
NORWICH AIRPORT INDUSTRIAL ESTATE,
NORWICH, NR6 6HQ
Telephone: 0603 412126
850035 – Issue 3

INDEX

GENERAL DESCRIPTION)
INSTALLATION)
CONTROLS AND CONNECTIONS) REFER TO OPERATING MANUAL
SPECIFICATION AND SPECIFICATION VERIFICATION)
OPERATION AND APPLICATIONS)

ILLUSTRATIONS AND TABLES

SECTION 1

TECHNICAL DESCRIPTION

1.1 GENERAL

Internal circuitry of the 1059 comprises two main assemblies. On the Analogue Assembly the measurement function and range is selected. Any full range signal is scaled to a nominal one volt D.C. output. Logic outputs are also generated denoting the range and function selected. The Analogue to Digital Converter Assembly digitizes the analogue signal to drive the display and produce the BCD output. The regulated power supply components are also mounted on this board.
The boards are described separately, each board is sub-divided into its various functions.

1.2 ANALOGUE ASSEMBLY

1.2.1 Mechanical Layout

The Analogue Assembly consists of the following sub-assemblies:

1. The Analogue Board which carries the switch banks S.B. 1–4 and all the active measurement circuitry. This is fitted with upper and lower guard shields, totally enclosing all analogue circuitry.
2. The Switch Board which carries the high voltage and high impedance circuitry. This assembly is mounted over switch banks S.B. 2 and S.B. 4.
3. The L.E.D. (Light Emitting Diode) Circuit Board which carries the front panel display of Range and Function. This assembly is mounted at right angles on the underside and at the front of the Analogue Board, such that, when correctly positioned in the instrument, the L.E.D.s protrude through the front panel.
4. The Current Board which carries all current shunts and current input protection circuitry. This assembly is mounted on standoffs on the underside of the Analogue Board and is mated through a 16–way connector. A guard shield is fitted enclosing all measurement circuitry.

Electrical Layout

The complete Analogue Assembly can be divided as shown in Fig 1.1, into the following main circuit areas:

1. Range and Function selection switching network including an input attenuator network. This D.C. voltage attenuator is extended to accommodate A.C. by addition of frequency compensation capacitors and is also used to form a resistance converter.
2. Range and Function coding logic circuits which command the appropriate active analogue switches.
3. A D.C. isolator which is used for all measurement functions, except A.C.
4. An A.C. isolator and true r.m.s. converter, used whenever A.C. is selected.
5. The A–D converter board command and Range/Function indication circuit.
6. A current converter and associated protection circuitry.
   The 15 volt power supplies and precision 5 volt reference are generated on the A–D converter board.

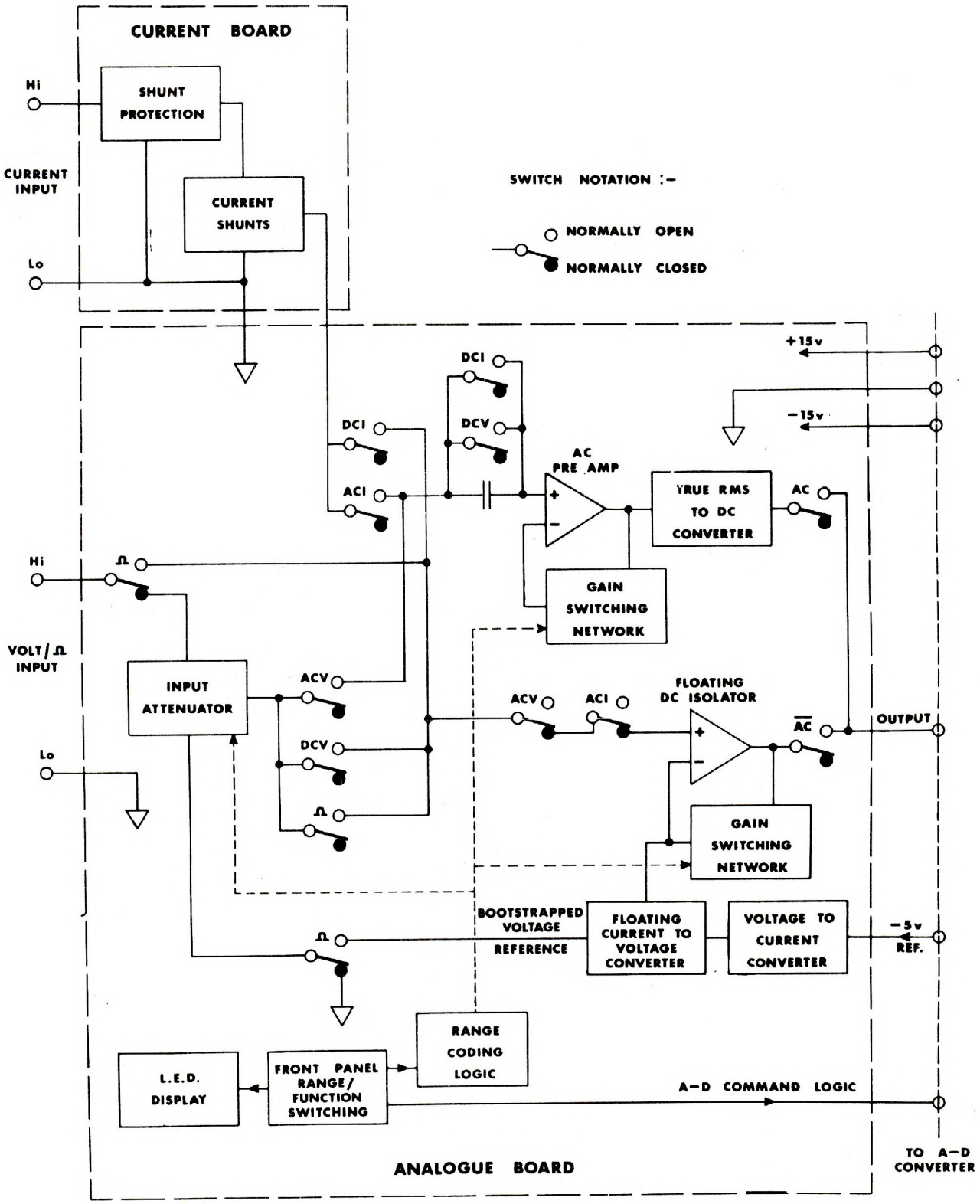

FIG 1.1 SIMPLIFIED DIAGRAM OF ANALOGUE CIRCUITS

1.2.2 DC Isolator

The DC Isolator is called up by the input switching and M2/C when 100mV DC or DCV is selected. The preamplifier is designed to present an input impedance of greater than 10,000 MΩ to signals up to ±2V and exhibit a very low input bias current (typically less than 20pA).

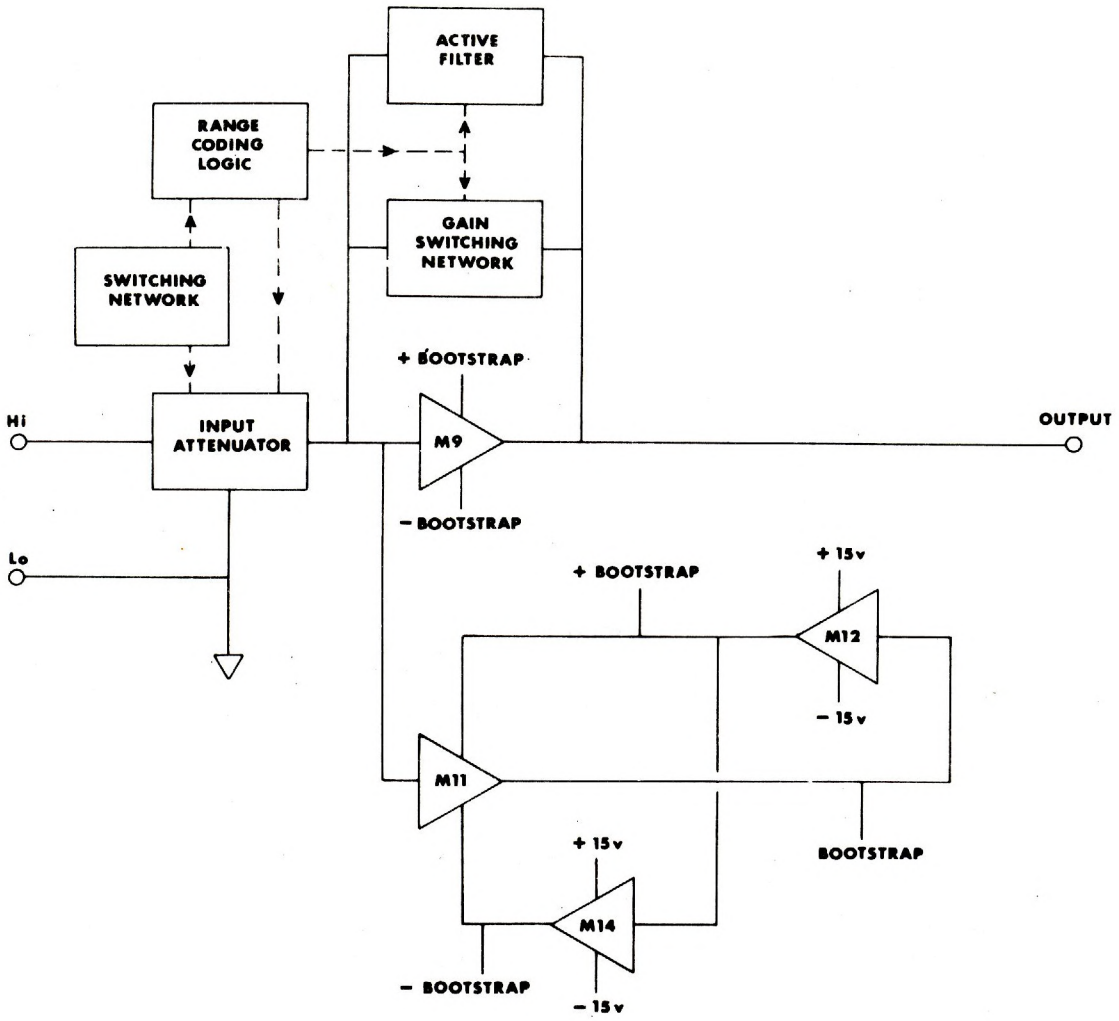

FIG 1.2 SIMPLIFIED DIAGRAM OF DC ISOLATOR

1.2.2.1 Range Switching

In the 100mV DC and the 1V DCV range the input signal is switched directly to the dc preamplifier (see Fig 1.3 (a) and (b)).
For the 10V, 100V and 1000V DCV ranges the attentuator network A.N.1, is switched in. The network is trimmed on each range to obtain a 1V full range output to the dc preamplifier as shown in Fig 1.3 (c), (d) and (e).

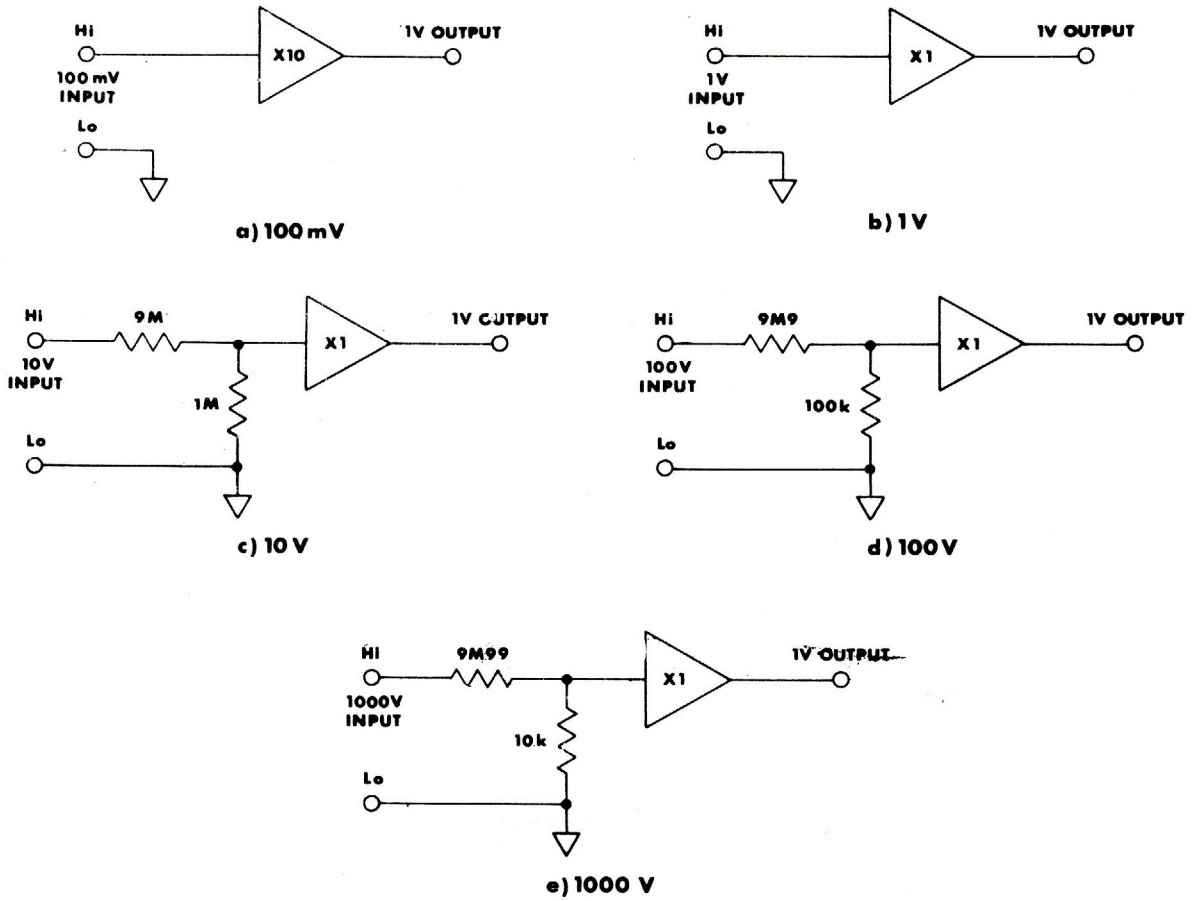

FIG 1.3 RANGE SWITCHING

1.2.2.2 Input Attenuator Trimming

The absolute values of the resistors in the attenuator are not as critical as their ratios.
The method of trimming is as follows: resistance from the output tapping to signal common (Lo) is increased by a percentage greater than the ratio percentage error, so the network always reads high. This is now brought down into calibration by a shunt path across the lower combination as shown in Fig 1.4.

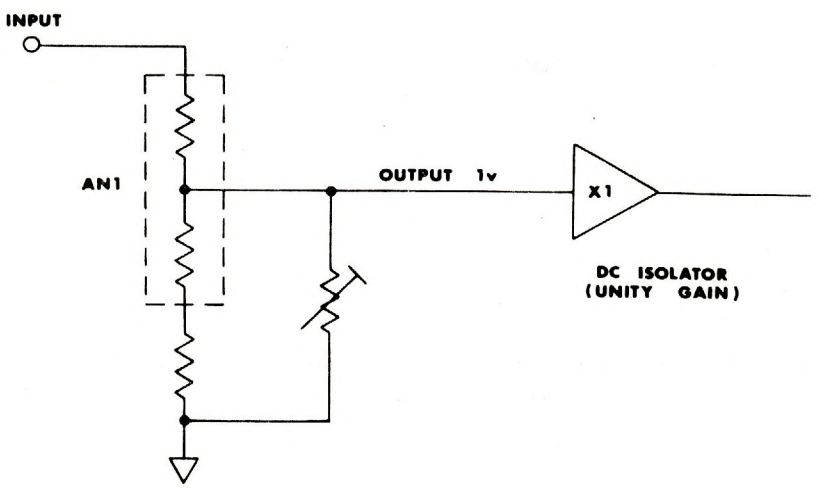

FIG 1.4 SIMPLIFIED ATTENUATOR TRIMMING

In practice it is convenient to shunt only the lowest resistance value in the attenuator network. So for each range we have the switched resistor combination shown in Fig 1.5.

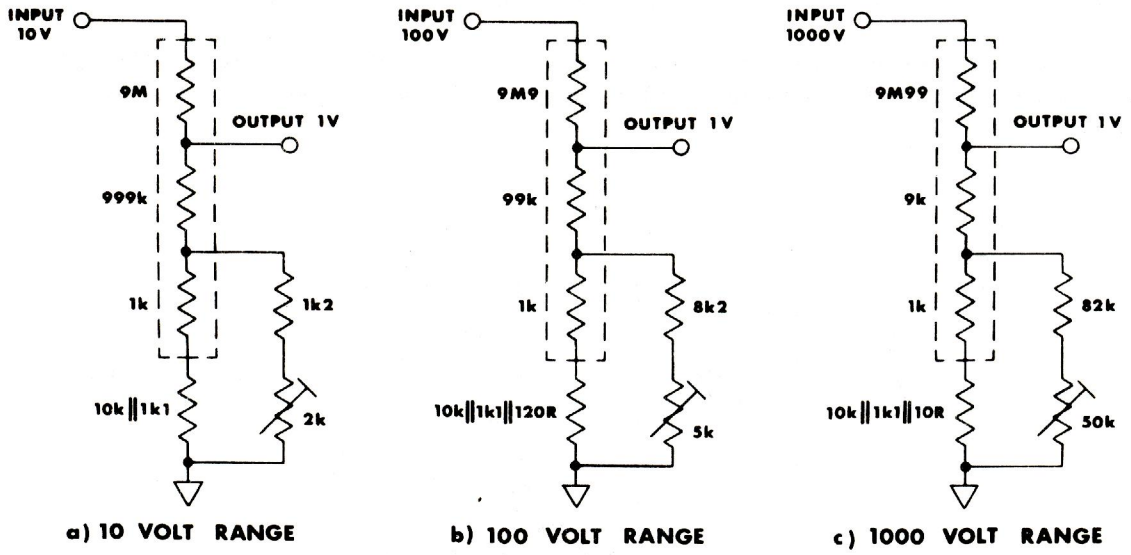

FIG 1.5 ATTENUATED RANGES

1.2.2.3 Preamplifier Scaling

The DC preamplifier has 3 switched gain defining networks and the simplified diagram, Fig 1.6 shows the essential features.

1. x10. Selected in 100mV DC and 1kΩ range. M10/B is turned 'on' and the output of M9 is connected to its inverting input via a ÷ 10 attenuator. Hence the overall gain of the amplifier is 10.
2. x1. Selected in all remaining DC voltage and resistance ranges. M10/A is 'on' and the output of M9 is connected directly to its inverting input. The overall gain of the amplifier is unity.
3. x2. Selected in all DC current ranges. M10/C is 'on' and the output of M9 is connected to its inverting input via a ÷ 2 attenuator. The overall gain of the amplifier is 2.

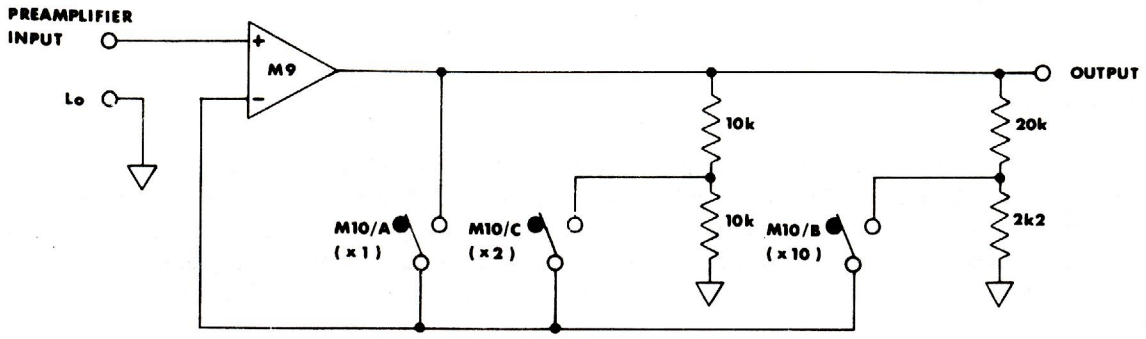

FIG 1.6 PREAMPLIFIER SCALING

1.2.2.4 Bootstrapped Supplies

Bootstrapping (the tracking of both ground lines and supply voltage with input signal) is essential for correct operation of input bias current compensation, input offset voltage compensation, temperature compensation and common mode rejection. The generation of +B.S. forms the basis of the resistance converter described in Section 1.2.4. and the addition of ½ (–B.S.) permits the use of Quad Bilateral Switches over a full switching range of –5V to +12V d.c.
M11 is a high input impedance buffer which looks at the inverting input of M9. The offset of M11 is adjusted so that its input is within 100μV of the input of M9 (the signal). M11 thus functions as a low impedance rail following the input signal.

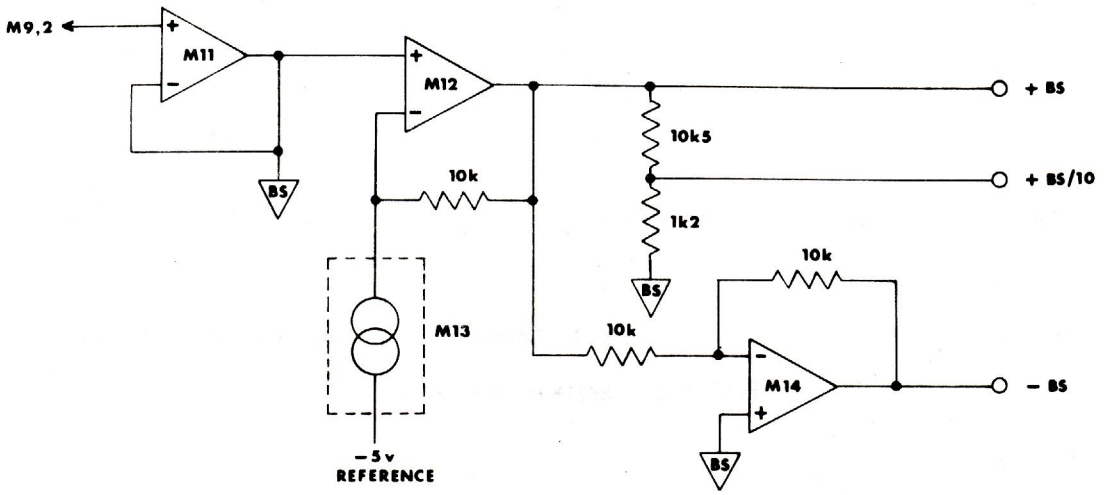

FIG 1.7 GENERATION OF BOOTSTRAPPED SUPPLIES

A voltage to current converter comprising M13 uses the –5V reference generated on the A–D board to produce a constant current of 1mA. Therefore 1mA must flow through the 10kΩ feedback resistor, R79, from the output of M12 and so 10V will be developed across the 10kΩ resistor. Since the non-inverting input of M12 is referred to bootstrap, the output of M12 will remain at +10V (+B.S.) with respect to the bootstrapped input signal. The –10V supply(–B.S.) is readily obtained by inverting +B.S. with respect to B.S. These power supply rails power the preamplifier, M9 and the bootstrap amplifier, M11. So, for example, with a +1V signal input on the high terminal the positive supply to M9 is +11V and the negative supply is –9V. Thus excellent common mode rejection is achieved.

1.2.2.5 Drift Compensation

M9 is a device selected by Datron which undergoes a long high temperature 'burn-in' on power. The device exhibits a nominal voltage drift of ±5μV/°C and a typical bias current of 1nA. Q9 is kept in close thermal contact with M9 and the whole input stage is under a draught excluding plastic moulding. Q9 has a base emitter voltage which changes at the same rate with temperature as the bias current of M9. Consequently a current derived from Q9 base emitter and fed into M9 input compensates for the bias current. Tracking to ±2pA/°C is achieved in this way.
To compensate for voltage drift, the actual drift is first measured and a correcting offset then injected to reduce that drift.
The final drift is <0.4μV/°C from 0 to 50°C. For a more complete description see Maintenance (Section 2).

1.2.2.6 Filtering

A 2 pole active filter provides 30db of attenuation at 50Hz increasing at 50dB/decade, and settles to 0.01% in 650mS. An additional 50dB of attenuation at 50Hz is obtained in the A–D circuitry by using a 20mS integration period (see Section 1.3.2.5).

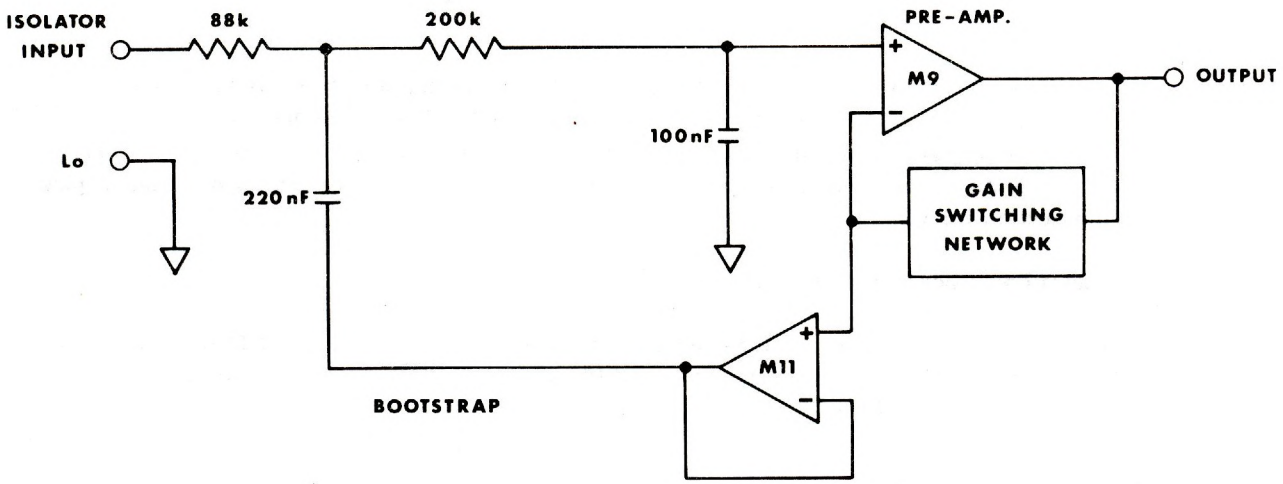

FIG 1.8 FILTER NETWORK

1.2.2.7 Input Protection

Resistor chain R30–33 (88kΩ total) is in series with the Hi input to the dc preamplifier. The preamplifier end of R33 is clamped by F.E.T.s Q6 and Q7 to the bootstrapped rail, which is in turn clamped to Lo (0v) by zener diodes D20 and D21. The 88kΩ chain limits the current in overloads and so the input to the preamplifier is clamped to approximately ± 4.5V. The power dissipation of the chain is such that 1000V may be applied continuously.

1.2.3 AC Converter

The AC Converter consisting of the ac isolator and true r.m.s. converter is called up by the input switching and M2/D when ACV or DCV + ACV is selected. The latter, dc coupled mode, computing the r.m.s. value of the dc and ac component of the input signal.

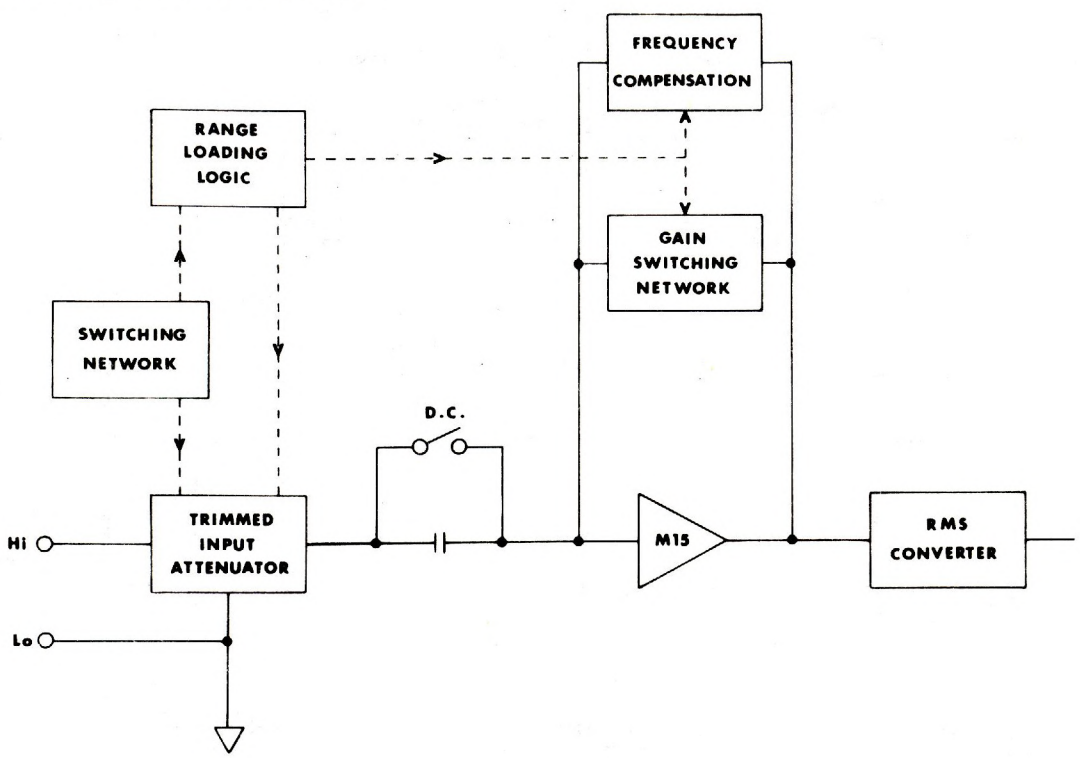

FIG 1.9 SIMPLIFIED DIAGRAM OF AC CONVERTER

1.2.3.1 Range Switching

In the 1V ACV range the input signal is switched directly to the ac preamplifier which has unity gain. For the 10V, 100V and 1000V ACV ranges the attenuator network A.N.1 is used as described in section 1.2.2.1. Thus excellent dc performance is available in the dc coupled (DCV + ACV) mode. The network is frequency compensated to maintain accuracy at higher frequencies by addition of capacitors across each voltage tapping as described in section 1.2.3.2.

1.2.3.2 Input Attenuator Frequency Compensation

The input attenuator network is trimmed for ac high frequency signals by the addition of decoupling capacitors between the network tappings. Values are chosen so that the same time constant appears between all tappings as shown in Fig 1.10 where R1.C1 = R2.C2.

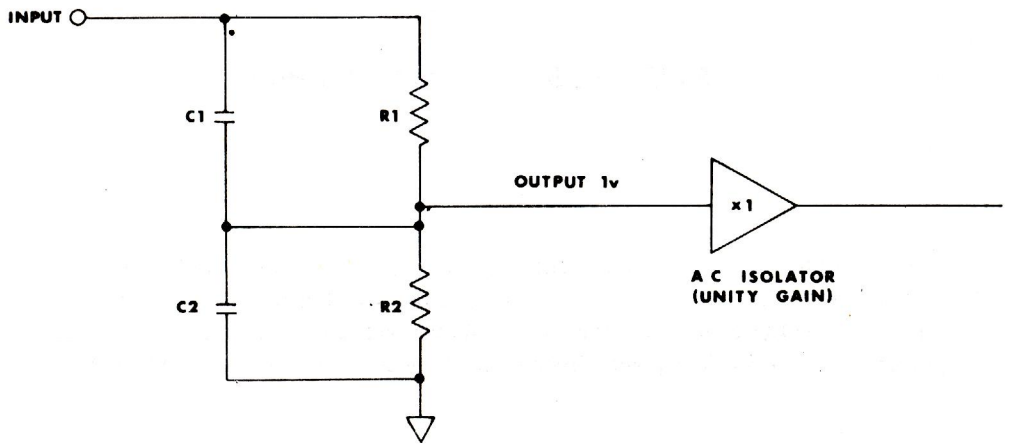

FIG 1.10 SIMPLIFIED ATTENUATOR H. F. TRIMMING

To considerably simplify the switching the method of trimming each range is a compromise to the ideal and does make each adjustment reasonably independent of the other trimmer settings See Fig 1.11.

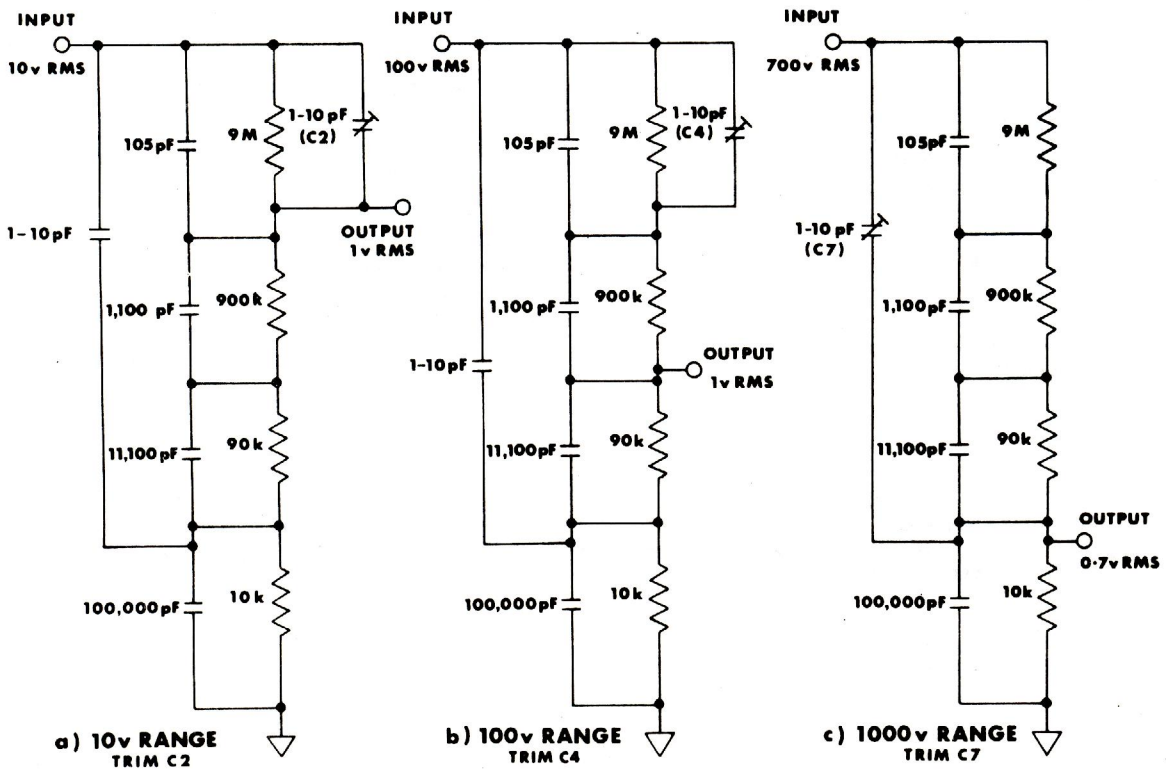

FIG 1.11 ATTENUATED A C RANGES

In practice the decoupling capacitor across the 9MΩ is split into two separate components C1 and C2 to share the voltage. Similarly, the voltage across the trimmers C2, C4 and C7 is reduced by series capacitors C31, C30 and C60. Capacitors C57 and C58 help compensate in the 10V range for the small, but finite, stray capacitance from the ac isolator input to ground.

1.2.3.3 Preamplifier scaling

In the ac preamplifier there are only two fixed gains of unity and 2.

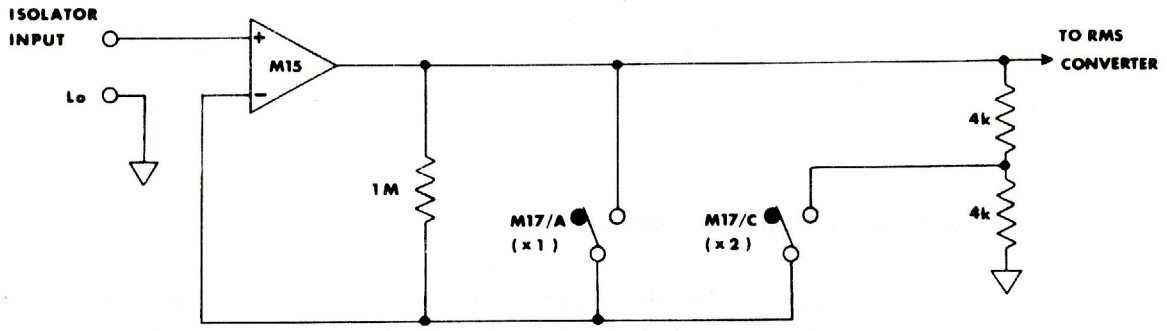

FIG 1.12 AC PREAMPLIFIER SCALING

1. x1 Selected for all ac voltage ranges. M17/A is 'on' and the output of M15 is connected directly to its inverting input. The overall gain of the amplifier is unity.
2. x2 Selected for all current ranges. M17/C is 'on' and the output of M15 is connected to its inverting input via a ÷ 2 attenuator. The overall gain of the amplifier is 2.

The switched gains are only approximate since the preamplifier also has gain to its own offset control and via M17/D.

When x10 is called up for dc measurements both M17/A and M17/C will be 'off' and so the loop is closed by the 1MΩ resistor, R111.

1.2.3.4 Preamplifier

The input to the preamplifier may be either ac or dc coupled. In dc coupled operation the dc blocking capacitor, C32 is bridged by closing the DCV or DCI switch pole. The maximum discharge current from C32 through the switch poles is limited by resistors R21 and R22.

In ac coupled operation the dc blocking capacitor, C32, interrupts the bias current of the preamplifier, M15, and so an alternative path is provided via R94, R95 and M17/B ('on' in ac coupled). By driving the junction of R94/R95 via C33 from the bootstrapped supply, M16, it is possible to still maintain the high input impedance (>1000MΩ) over the specified frequency range.

Resistor chain R90–R93, 88kΩ total, is in series with the input to M15. The amplifier end of R93 is clamped via F.E.T.s, Q14 and Q15 to the ac bootstrapped input signal, which is in turn clamped to Lo (0V) via zener diodes D1 and D2. The 88kΩ chain limits the current in overloads and the power dissipation of the chain is such that 1000V pk may be applied continuously.

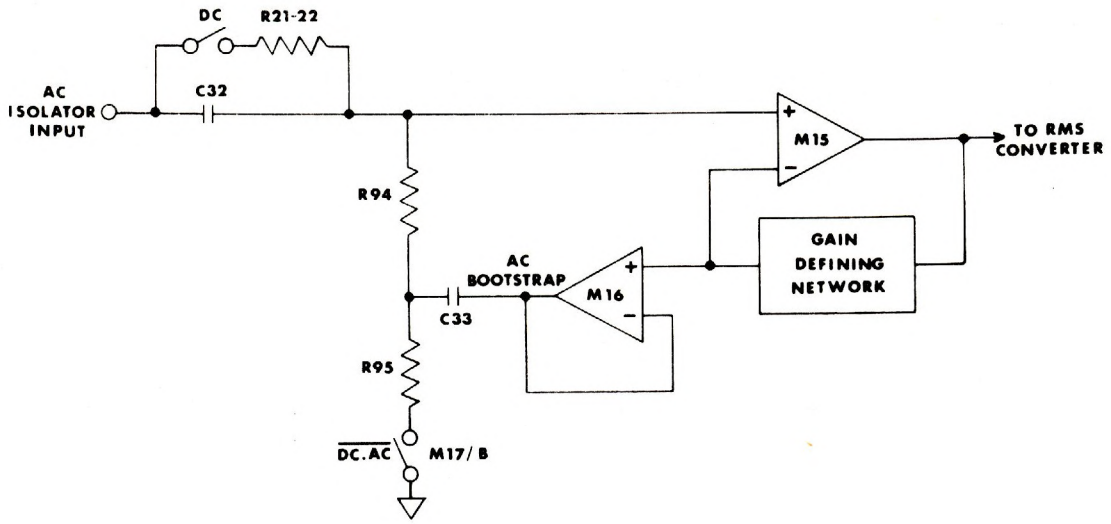

FIG 1.13 AC COUPLED OPERATION

The high frequency response is set by adjusting C40 which, with R110, presents a time constant at the inverting input of M15 to compensate for the time constant at the non-inverting input produced by resistance chain R90–R93 with C34 and stray capacitance to common.

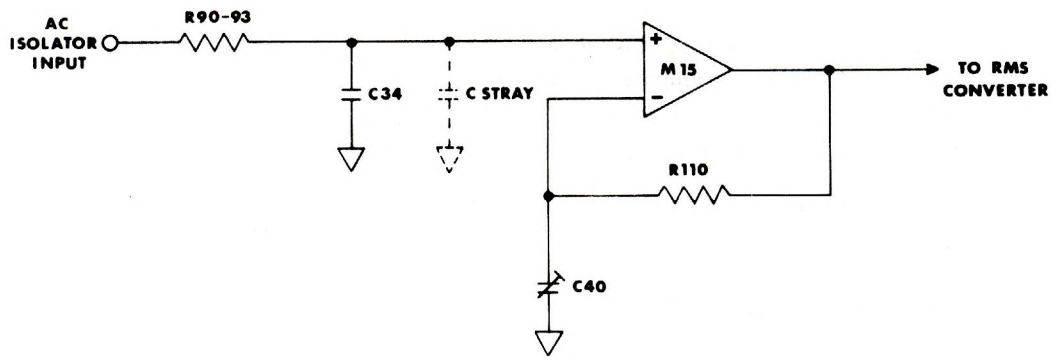

FIG 1.14 PREAMPLIFIER FREQUENCY COMPENSATION

The output of the preamplifier is zeroed by adjustment of F.S.V. resistors R107 and R108 and finally with R105.

1.2.3.5 R.M.S. Converter

The RMS Converter takes the scaled ac signal from the preamplifier and converts it to an equivalent DC signal suitable for Analogue-to-Digital conversion. The conversion technique is electronic true RMS sensing as shown in the simplified block diagram Fig 1.15.

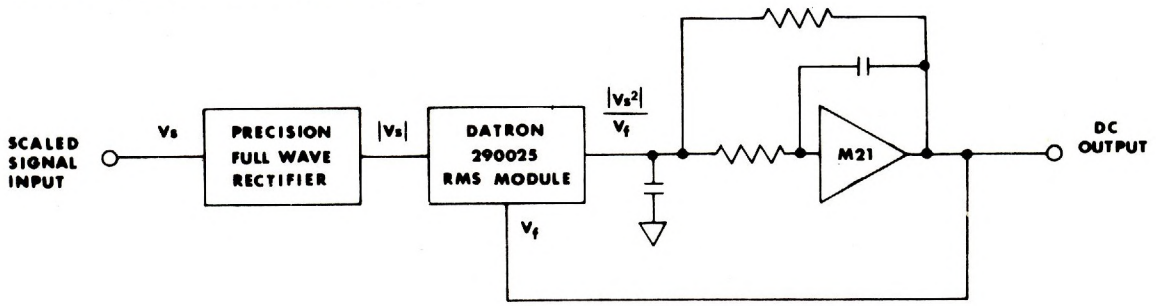

FIG 1.15 TRUE RMS CONVERTER

Mathematically, the description is as follows:

$$\text{Output voltage, } Vo = \frac{\overline{|Vs|^2}}{Vf}$$

where bar notation indicates averaged.

Vs is the rectified form of the input signal Vs.

Since the loop is closed:

$$Vo = Vf$$

therefore $Vo^2 = \overline{Vs^2}$ $\quad (Vs^2 = |Vs|^2)$

so $Vo = \sqrt{\overline{Vs^2}}$

Thus Vo is the true RMS value of Vs.

For a dc coupled signal the RMS value is:

$$Vo = \sqrt{Vdc^2 + Vac^2}$$

M18 and M19 form the full-wave rectifier which is of the summing type, that is M18 is a precision half-wave rectifier inverter the output of which is summed with the non-inverted signal, with a weighting of 2:1, at the input of M19. This forces a full-wave rectified current to flow in RMS module M20. Although the simplified block diagram of Fig. 1.15 implies that the RMS module operates with voltages it in fact operates on currents both in and out. Trim resistor R126 balances the rectifier such that a dc input or any other non-symmetrical waveform provides the same output whether inverted or not.

The output current from the RMS module passes into a 2 pole active filter-buffer M21 and is converted to a proportional voltage. In practice this is attenuated 5:1 by the ratio of R154 and R156 to obtain a nominal 1 volt full range output. M22 is a voltage to current converter which provides a feedback current to the RMS module which is proportional to the output voltage. R119, R131, R147 and R150 are zero adjustments for M18, M19, M21 and M22 respectively. R157 is an overall gain adjustment and R138 is a high crest factor gain adjustment.

1.2.4 Resistance Converter

1.2.4.1 General

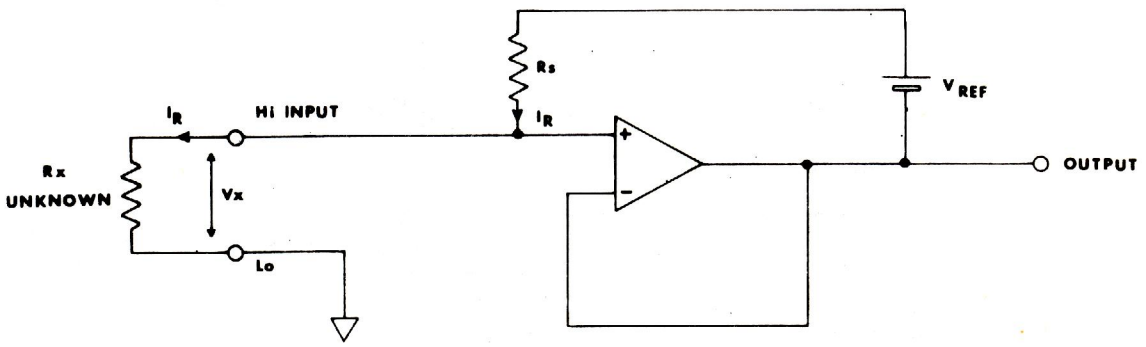

FIG 1.16 SIMPLIFIED OHMS SCHEMATIC

The unknown resistor, Rx, is connected to the input of a unity gain buffer. On the output of the buffer is a floating voltage reference, Vref, which is applied to the precision resistor, Rs. Since the voltage across Rs remains constant a constant current, Ir flows through Rs. If the buffer has an infinite input resistance, all current flows out of the Hi input terminal of the instrument, through the unknown resistance, Rx and back via the Lo input terminal to common. Hence a voltage, Vx, is developed across the input terminals which is proportional to Rx.

In practice Rs is a trimmed section of the attenuator network (A.N.I), the unity gain buffer is the Bootstrap amplifier, M11, and the voltage reference is the positive bootstrapped supply (see section 1.2.2.4).

The various currents produced are:–

Range/ Function	Current Through Unknown	Voltage Across Unknown (Full Range)	DC Isolator Gain
1kΩ	100μA	100 mV	x10
10kΩ	100μA	1V	x 1
100kΩ	10μA	1V	x 1
1000kΩ	1μA	1V	x 1
10MΩ	100nA	1V	x 1

These are generated by the circuits shown in Fig 1.17.

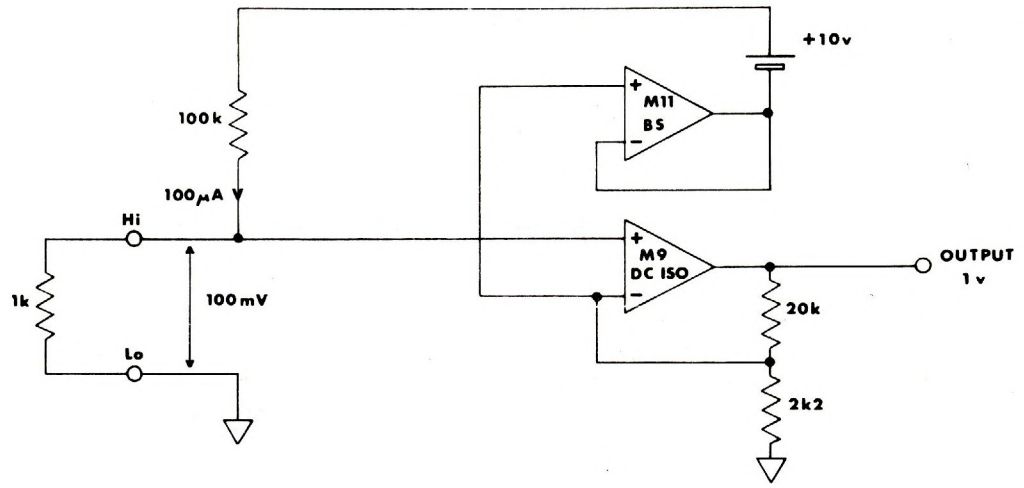

a) 1k OHM RANGE

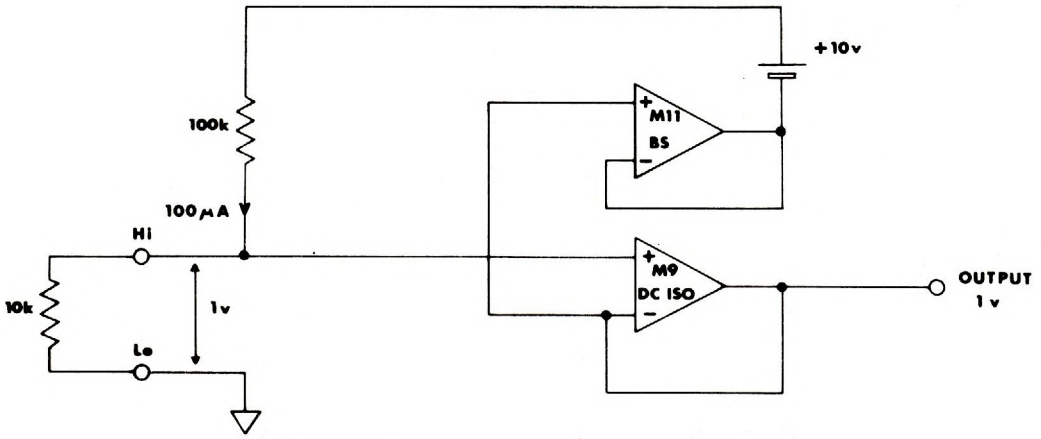

b) 10k OHM RANGE

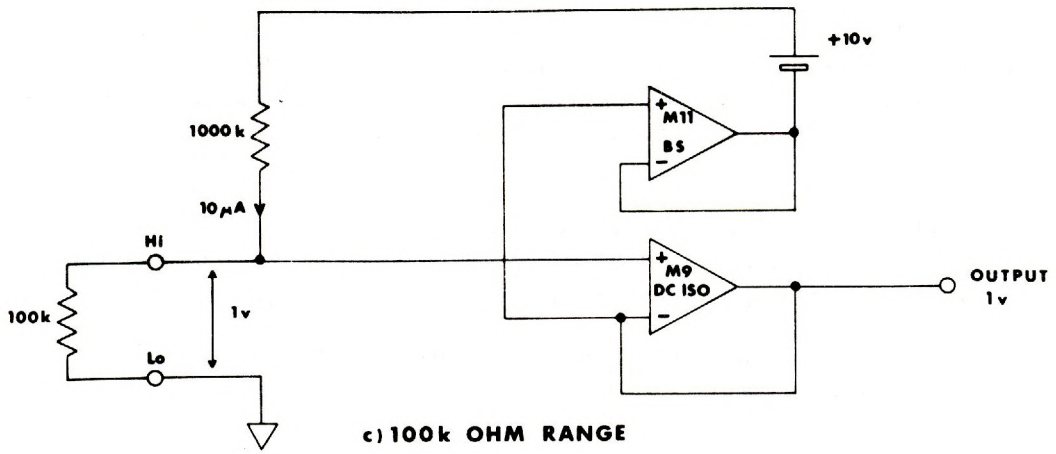

c) 100k OHM RANGE

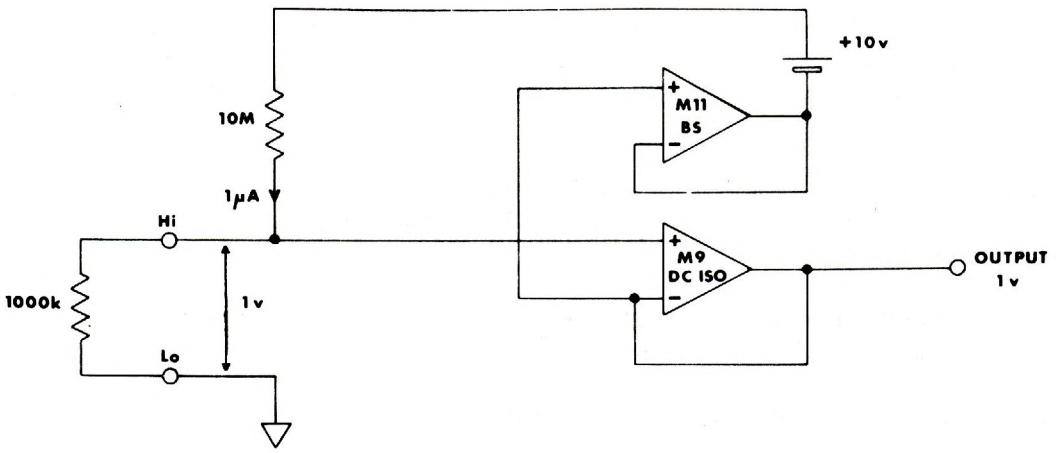

d) 1000k OHM RANGE

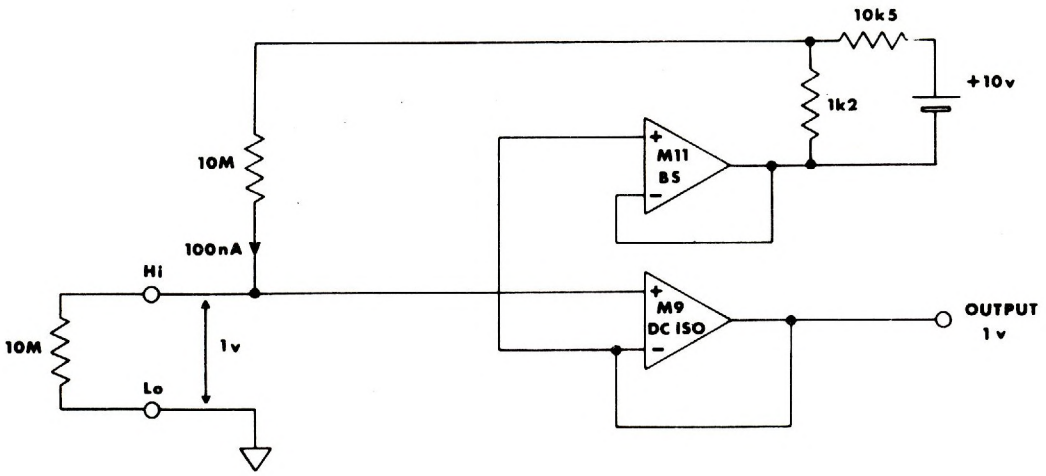

e) 10M OHM RANGE

FIG 1.17 SEPARATE OHMS RANGE SWITCHING

NOTE that both 1kΩ and 10kΩ ranges use the same reference current, so the gain of the DC isolator is x10 in the 1kΩ range. The voltage reference is set as the calibration for the 10kΩ range. Hence each other range is calibrated by adjusting the source resistor, Rs, to be in the correct ratio to the 100kΩ source resistor, used for the 10kΩ range. In the 10MΩ function the reference voltage is attenuated by 10 to obtain the 100nA current reference.

Keeping the source resistor, Rs to a minimum value of 100kΩ permits application of 250V r.m.s. to the input terminals in all ohms ranges. Following gross overloads several minutes should be allowed for the attenuator network to cool down before continuing with measurements.

A zero offset control, R45 enables internal lead resistance to be compensated. This injects an offset at the DC isolator in the 1kΩ and 10kΩ ranges.

1.2.4.2 Source Resistance Calibration

As stated in Section 1.2.2.2 only the ratios of the resistors used in the current source are important. The absolute value of resistance for each range is not critical once the reference voltage has been adjusted to calibrate the 10kΩ range. Therefore each resistor can be calibrated by the same method adopted in the DC voltage calibration (See Section 1.2.2.2).

In each case only the lower part of the attenuator network is used, except for the 1000kΩ and 10MΩ ranges where all the network is required. Therefore, to trim in the 10MΩ current source resistance for the 1000kΩ range a higher tapping on the network is used.

Note that the 'low' end of the attenuator (in volts) is switched to the positive bootstrapped supply for resistance measurements.

The current source resistor for each resistance range and function is shown in Fig 1.18.

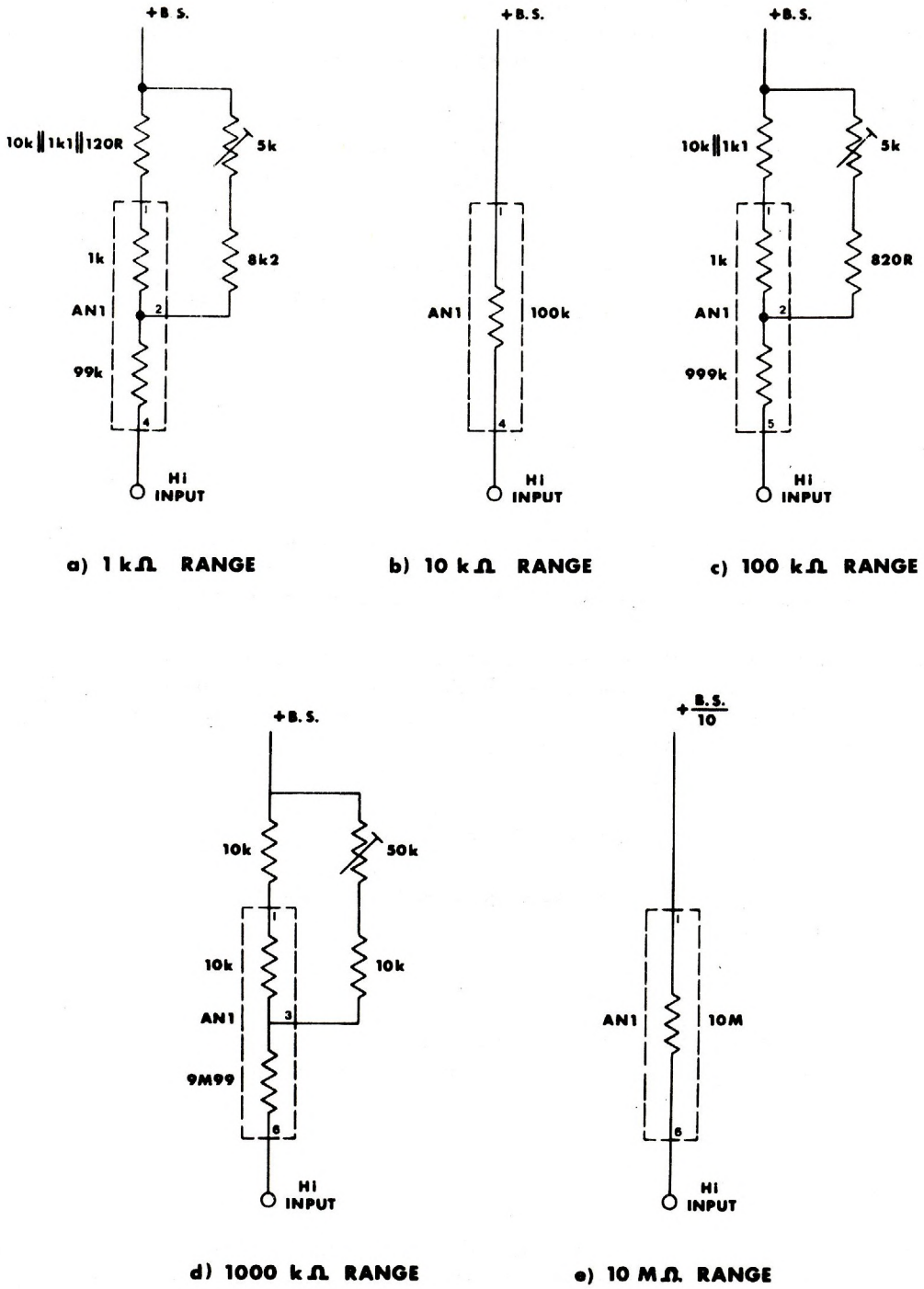

FIG 1.18 CURRENT SOURCE RESISTANCE

1.2.5 Range Coding Logic

The Range Coding logic is used to command appropriate control voltages of the Quad Bilateral Switches and discrete signal switching in the analogue section when a particular Function and Range is selected. Fig 1.19 gives the truth table of all logical outputs for a given Function and Range.

The power supplies to the logic are derived from the dc bootstrapped supplies (see section 1.2.2.4), i.e. +B.S. and –B.S./2, derived from –B.S. by attenuator R26, R27 and emitter follower, Q5. The logic power supplies are therefore +10V and –5V with respect to the bootstrapped dc input signal.

As the same supplies are used for the Quad Bilateral Switches M1, M2 and M10 the control voltages may be driven directly from the coding logic, M17 is powered from ±7.5Vand so is interfaced to the coding logic by resistors R89, R159, R176 and R177 to limit the current into the input protection diodes.

Range/Function information to the inputs of the logic is derived from the analogue switch banks, S.B.2 and S.B.4. M6,2 and M6,8 are driven from a display blanking signal generated on the current board, (See Section 1.2.7) via connector J1–16. Q4 provides necessary level translation to drive Q8 in the dc isolator.

1.2.6 A–D Command and Function Indication Circuit

The A–D Command and Function Indication Circuit provides the A–D board with the Range/Function information necessary to drive the correct decimal point on the display, when to indicate the polarity of the incoming signal and to produce a BCD output describing Range and Function selected.

The L.E.D.s (Light Emitting Diodes) D1–D11 are mounted on a p.c.b. set at right angles on the underside of the main analogue p.c.b. so that the L.E.D.s protrude through the front panel of the instrument to give a visual indication of the Range/ Function selected. This has particular significance when Functions 100mV DC or 10MΩ are selected when any Range setting is over-ridden.

Power is taken from the A–D board, +5V supply and switching is provided by switch banks S.B.1 and S.B.3. Consequently the circuit is electrically isolated from all analogue circuitry.

All information and the power supply is transmitted through the 'ribbon' cable connector, J3.

1.2.7 Current Converter

The current converter consists of a set of precision current shunts and electronic circuitry which fully protects the instrument against surge currents of up to 300A (250V AC mains applied directly to the current input terminals).

1.2.7.1 Current Measurements

Precision current shunts of 0.5000Ω, 5.000Ω, 50.000Ω and 500.0Ω are used for the 1000mA, 100mA, 10mA and 1mA ranges respectively. The voltage developed across the shunts is 0.5V for a full range current input. This is measured using the dc isolator in DCI and the ac isolator in ACI or DCI + ACI. The latter, dc coupled mode, computing the r.m.s. value of the dc and ac component of the input current. The isolators operate in the x2 mode in all current ranges to provide the appropriate 1V full range output to the A–D board.

To eliminate errors in measurement due to lead or contact resistance all current shunts are 4 wire switched, i.e. a pair of current leads and a pair of voltage leads to each shunt are switched separately. This range switching is all completed on the Analogue Board, via connector J1 as shown in Fig 1.20.

I C			M1				M2				M10				M17				D8
PIN No.			5	6	12	13	5	6	12	13	5	6	12	13	5(R89)	6(R177)	12(R176)	13(R159)	Cathode
Function	100mv DC		0	0	*	*	*	1	0	0	1	0	0	0	1	0	*	0	1
	DC V	1V	0	0	0	0	0	1	0	0	0	0	0	1	1	0	1	1	1
		10V	0	0	0	0	1	1	0	0	0	0	0	1	1	0	0	1	1
		100V	0	0	0	1	0	1	0	0	0	0	0	1	1	0	1	1	1
		1000V	0	0	1	0	0	1	0	0	0	0	0	1	1	0	1	1	1
	AC V	1V	0	0	0	0	0	0	1	0	0	0	0	1	1	0	1	1	1
		10V	0	0	0	0	1	0	1	0	0	0	0	1	1	0	0	1	1
		100V	0	0	0	1	0	0	1	0	0	0	0	1	1	0	1	1	1
		1000V	0	0	1	0	0	0	1	0	0	0	0	1	1	0	1	1	1
	DC V + AC V	1V	0	0	0	0	0	0	1	0	0	0	0	1	0	0	1	1	1
		10V	0	0	0	0	1	0	1	0	0	0	0	1	0	0	1	1	1
		100V	0	0	0	1	0	0	1	0	0	0	0	1	0	0	1	1	1
		1000V	0	0	1	0	0	0	1	0	0	0	0	1	0	0	1	1	1
	DC I	1mA	0	0	0	0	0	1	0	0	0	1	0	0	1	1	1	0	1
		10mA	0	0	0	0	1	1	0	0	0	1	0	0	1	1	0	0	1
		100mA	0	0	0	1	0	1	0	0	0	1	0	0	1	1	1	0	1
		1000mA	0	0	1	0	0	1	0	0	0	1	0	0	1	1	1	0	1
	AC I	1mA	0	0	0	0	0	0	1	0	0	1	0	0	1	1	1	0	1
		10mA	0	0	0	0	1	0	1	0	0	1	0	0	1	1	0	0	1
		100mA	0	0	0	1	0	0	1	0	0	1	0	0	1	1	1	0	1
		1000mA	0	0	1	0	0	0	1	0	0	1	0	0	1	1	1	0	1
	DC I + AC I	1mA	0	0	0	0	0	0	1	0	0	1	0	0	0	1	1	0	1
		10mA	0	0	0	0	1	0	1	0	0	1	0	0	0	1	1	0	1
		100mA	0	0	0	1	0	0	1	0	0	1	0	0	0	1	1	0	1
		1000mA	0	0	1	0	0	0	1	0	0	1	0	0	0	1	1	0	1
	KΩ	1	0	0	0	0	0	1	0	0	1	0	1	0	1	0	1	0	1
		10	0	0	0	0	0	1	0	1	0	0	1	1	1	0	0	1	1
		100	1	0	0	0	0	1	0	0	0	0	0	1	1	0	1	1	1
		1000	0	1	0	0	0	1	0	0	0	0	0	1	1	0	1	1	1
	10MΩ		0	0	*	*	*	1	0	0	0	0	0	1	1	0	*	1	1
	Current overload		0	0	*	*	*	0	0	0	0	1	0	0	*	1	*	0	0

NOTES: 1) LOGIC 1 = +BS V
LOGIC 0 = $-BS/_2$ V

EXCEPT D19 WHERE: LOGIC '1' = (+BS –0.6) V
LOGIC '0' = –15 V

2) * INDICATES STATE DEPENDENT ON RANGE.

3) LOGIC INPUTS TO M17 CLAMPED TO <+7.5 V, >–7.5 V

Fig. 1.19 RANGE CODING TRUTH TABLE

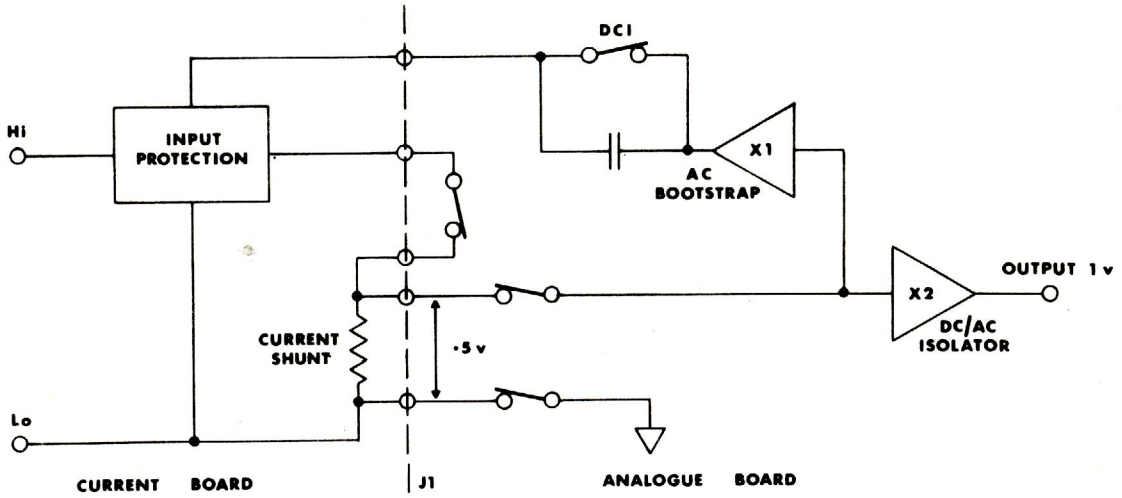

FIG 1.20 CURRENT MEASUREMENTS

The ac isolator is permanently connected in both dc and ac current ranges to provide a bootstrapped supply used to eliminate errors due to leakage in the protection circuitry.

1.2.7.2 Protection Circuitry

To maintain the precision of the current shunts they are overload protected both by series fuses and by fast acting electronic protection. Protection circuit operation may be split into three sections depending on the overload level:

1. Up to 4A: The current converter will continuously dissipate low level overloads by means of an electronic trip circuit which places 0.1Ω in parallel with the current shunts thereby diverting the current from them.
2. 4A to 10A: A 4A to 10A overload results in the electronic trip circuit being operated shunting the input with 0.1Ω. In addition fuse F2 blows within the first 10 second latch period of the trip circuit.
3. Greater than 10A: The current shunts are continuously protected by zener diodes D3 and D4 which prevent the voltage across the shunts from exceeding approx. 7V.

For overloads less than 10A the power dissipated in the diodes is sufficiently low (approx 70 W max) not to exceed their ratings during the time it takes relay RL1 to operate.

For overloads greater than 10A and particularly high level overloads fuse F1 is included in series with the input. This is a type GSA 5A semiconductor protection fuse which exhibits a very fast fusing time and rapid arc extinction. This fuse prevents excessive dissipation in diodes D1 to D4 and should only be replaced by a fuse of similar specification. It should also be noted that D3 and D4 are transient suppression diodes and cannot be replaced by a normal 5V, 5W zener.

Display blanking: The output transition of M1 from –15V to +15V is fed via R28 to the analogue board and is used to blank the display while the overload circuit is tripped. This eliminates the display of false current readings.

1.3 ANALOGUE TO DIGITAL CONVERTER

1.3.1 Analogue Section

1.3.1.1 General Principles

Section 1.3 and Fig 1.3 in the Operating Manual gives a very basic description of the principles of integration involved. This paragraph covers in more detail those general principles. Fig 1.21 is a block diagram showing the essentials of the analogue section of the Analogue to Digital Converter. Fig 1.22 is a timing diagram which should be referred to in conjunction with Fig 1.21 for a full appreciation of the circuit operation.

The analogue section is controlled by timing pulses generated in the digital section and transferred via pulse transformers T2 and T3 to the analogue side. These timing pulses control the sequence from RESET to SIG to REF and back to RESET. The sequence is effected by using the timing pulses to set and then clock a 2 bit binary counter M44. The 2 bit output $\overline{AB}$ and its complement, AB drive logic gates which in turn operate F.E.T. switches Q1 – Q4, Q6 – Q9.

1.3.1.2 RESET Period and Auto Zero

During this period any residual charge from the previous reading cycle is removed from the integrator capacitor C30, and the AUTO ZERO circuitry stores the cumulative zero errors of M35, M36 and M37.

The RESET state is dictated by LOW (–15V) states at both A and B from M44, when this occurs a HIGH (–10V) state appears at the input pins 5 and 6 of the M46 NAND gate producing a LOW (–15V) at pin 4. This turns off Q18, which switches Q4 (FAST RESET) ON momentarily (approx 1mS) via C17 and R26, and after a short delay (approx 1 mS) set by C38 and R22 allows Q3 (RESET and Auto Zero) to switch ON. When B went to a logic '1' at the end of the previous SIG period it reset M45 F/F to give a LOW state at the Q output (pin 13) which turned OFF Q14 allowing Q2 to turn ON and turning OFF Q1. These states of Q1 and Q2 are maintained from the end of SIG through to REF and RESET.

Also at the commencement of RESET, $\overline{B}$ changes to a HIGH (–10V) state. This appears at pin 13 and 12 of M46 NAND gate causing the output pin 11 to go LOW and turn OFF Q23 allowing F.E.T. switch Q8 to turn ON.

Now, during RESET the F.E.T. switches are in the states shown in Fig 1.21. Q8 connects the output of M35 to the input of the integrator. Q3 and Q4 close the feedback loop and C30 assumes a charge such that when C32 samples the cumulative errors of M35, M36 and M37, the stored error is transferred via M49 to the non-inverting input of M38 to produce zero volts at TP9. This auto zero output from M49 is maintained during the following SIG and REF periods until being adjusted again, if necessary, during the next RESET period.

1.3.1.3 SIGNAL INTEGRATE Period

Following the RESET period, a timing pulse arrives at T3 the SIG pulse transformer. This sets the binary counter, forcing A to a HIGH state (–10V) and ensuring that B is a Low state (–15V). The SIG pulse also appears at the clock input pin (11) of 'D' type flip-flop M45, the Q output (pin 13) thus adopts the signal at the D input (pin 9), –10V and therefore goes to a HIGH state. This switches ON Q14 which switches on F.E.T. Q1 and switches OFF F.E.T. Q2. Q1 connects the unknown signal to the X5 amplifier input. Q8 is already ON following the RESET period and X5 the input signal appears at TP5 and is fed to the integrator. If the signal at TP5 is positive then the output of the integrator at TP7 will move off negatively as shown in Fig. 1.22. Meanwhile, the voltage at TP7 is much amplified by the first stage of the null detector M37. This stage incorporates clamping diodes D18 and D19 so that although a large output swing occurs when the voltage at TP7 departs from zero by only a small amount, the voltage at TP8 is clamped, again as shown in Fig 1.22. Further null detector gain is introduced by M38 and through level shifting zener diode D23 to M42. At TP10, the null detector gain is such that the output is a logic level of either 0V for a negative signal or +15V for a positive signal as shown in Fig 1.22. The logic voltage at TP10 is level shifted by zener diode D25 to provide either –9V or –15V via R29 at the D input (pin 5) of the 'D' type flip-flop M45. With a positive input signal the voltage at pin 5 is HIGH (–9V).

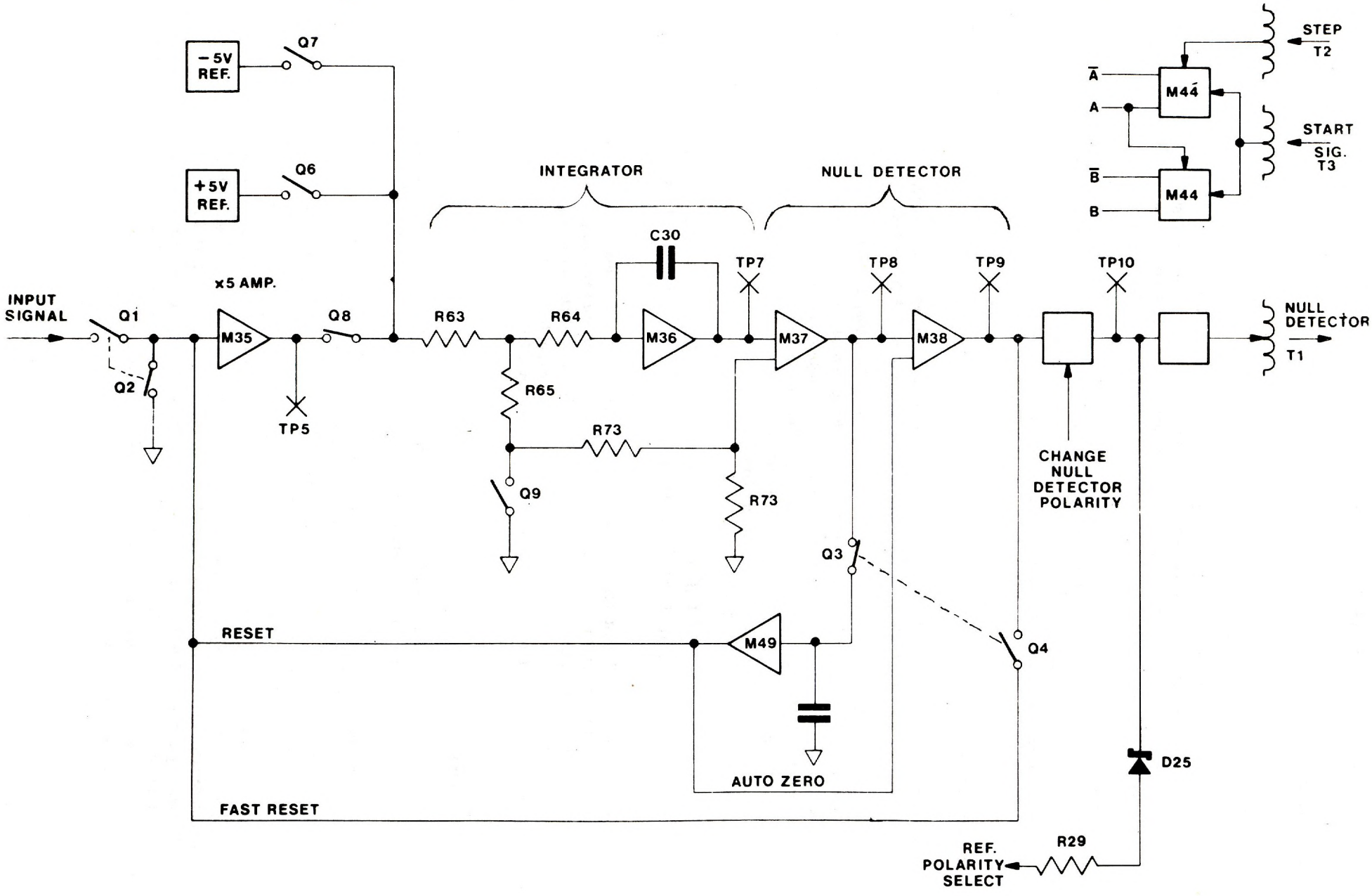

Fig. 1.21

SIMPLIFIED DIAGRAM OF ANALOGUE SECTION

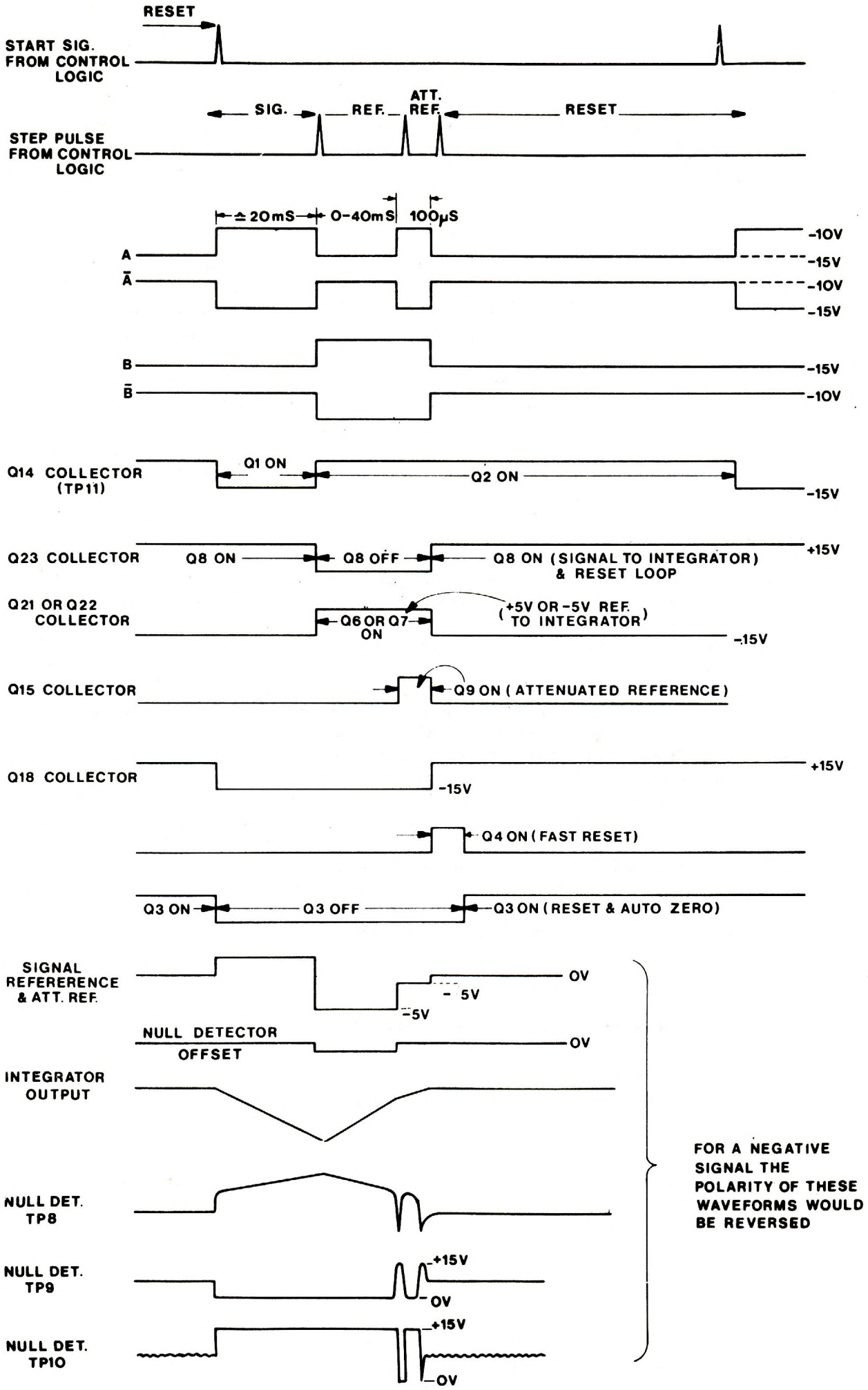

Fig. 1.22

A-D CONVERTER TIMING DIAGRAM

1.3.1.4 Reference Integrate

After 20 mS of SIG a STEP pulse arrives at pin 3 of M44 to clock M44 and change A to a LOW (–15V) and B to a HIGH (–10V). $\overline{B}$ at NAND gate pin 13 changing to a LOW (–15V) produces a HIGH (–14.3V) at the output pin 11 and turns ON Q23 which switches OFF the signal path through Q8.

As explained in paragraph 1.3.1.3 with a positive input signal a HIGH state (–9V) is present at 'D' input (pin 5) of 'D' type flip-flop M45 at the end of the SIG period.

Therefore, when $\overline{A}$ changes to a HIGH on the clock (pin 3) input of M45 at the end of SIG, the HIGH at the 'D' input (pin 5) is transferred to the Q output (pin 1). At the same time a LOW (–15V) appears at the $\overline{Q}$ output (pin 2), which turns OFF Q22 allowing F.E.T. Q7 to switch ON, thus connecting the –5V reference to the input of the integrator. Consequently, a reference signal of opposite polarity to the measured signal is applied to the integrator to discharge the capacitor. The reference integrator period required for discharging the capacitor C30 to zero volts will always be less than 40 mS (except with an overload signal). To overcome the problem of uncertainty near zero a small proportion of the reference voltage is fed forward to bias the null detector. This means that even with zero input signal there is a small reference ramp lasting for a period of time determined by the amount of feed forward (set by R80 for positive signals and R81 for negative signals). This ensures that a false null detector pulse is not produced as a result of spurious noise generated at the end of the SIG period. For a zero input the display would read several digits, and this is compensated for in the main digital counter by ignoring the first few clock counts.

During the first part of the reference period, F.E.T. switch Q9 is turned OFF. This allows the reference voltage, attenuated by R73 and R72 to feed a small offset into the null detector. The polarity of the offset is such that the reference ramp from the integrator (TP7) reaches null detector threshold before the integrator voltage has reached 0V. When this threshold is crossed, the logic level at the null detector output changes state, in this case from HIGH, (+15V) to LOW (0V), which transfers a first null detector pulse via T1 to the control logic. Following an appropriate synchronization delay in the control logic another STEP pulse arrives at T2 to clock M44, this changes A to a HIGH state (–10V). This means that both inputs (pins 1 and 2) of NAND gate M46 are HIGH, producing a LOW state (–15V) at pin 3, turning Q15 OFF which allows Q9 to turn ON. When Q9 switches ON, the reference voltage is attenuated by R63 and R65 and is effectively –0.5V, also the small offset fed to the null detector via R73 and R72 is removed. The removal of this offset immediately resets the null detector to its previous state with a HIGH (+15V) at TP10. The reference to the integrator having been attenuated to 1/10 of its previous value, means that the integrator capacitor C30 now discharges at 1/10 of the previous rate and continues until zero charge is reached. At this point the threshold of the null detector, now 0V, is again crossed and the logic level at the null detector output again changes to LOW (0V) transferring a second null detector pulse via T1 to the control logic. The attenuated reference period lasts for approx 100μS, whereas the full reference period varies from almost zero to 40 mS for a zero to full scale input signal respectively. Following the second null detector pulse another STEP pulse arrives at T2 which clocks M44, changing both A and B to a LOW (–15V) and thus switching the analogue circuitry back into the RESET mode as described in paragraph 1.3.1.2.

1.3.1.5 References

Fig 1.23 shows the essentials of the circuitry for producing the stable +5V and –5V reference voltages.

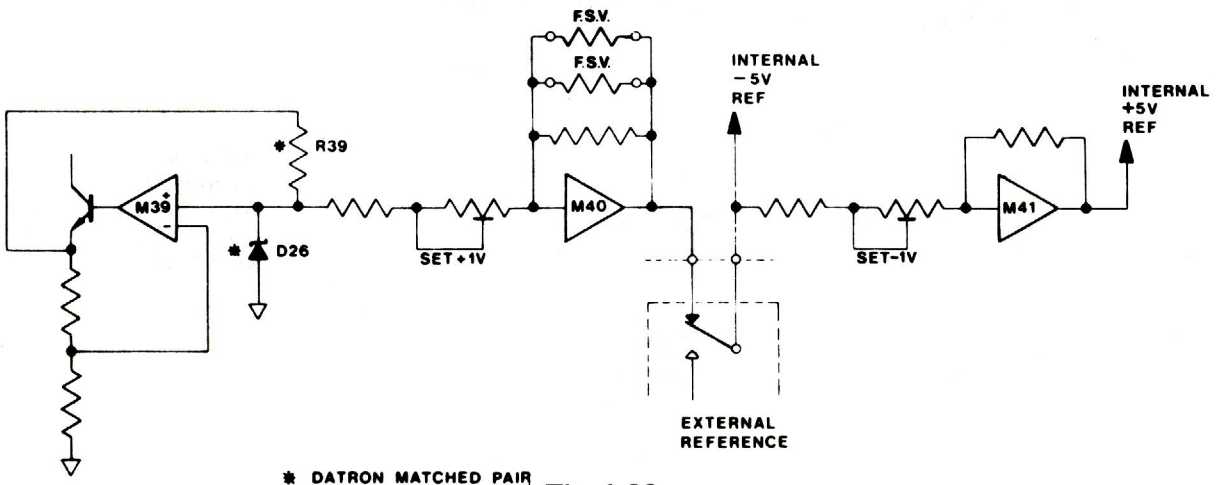

Fig. 1.23

REFERENCES

The stability of the reference is dependent upon the inherent stability of the reference zener, D26. This zener is selected by Datron for maximum long term stability and minimum temperature coefficient. The series resistor R39 is selected for use with each individual zener and both are included as a matched pair.

For optimum stability R39 and D26 are used in conjunction with amplifier M39 to produce a voltage of approx 11 volts to supply the current for the zener itself. By this means an extremely stable voltage of approximately +6.3 volts is produced at the cathode of D26. To obtain the 5V ref required, inverting amplifier M40 is used, the feedback resistance R67 being trimmed by R70 and R71 and using R76 as a fine adjustment to calibrate the output of M40 to precisely –5V. Similarly, to produce the +5V reference, another inverting amplifier M41 is used, having unity gain and being finely trimmed by R28.

1.3.1.6 Using an External Reference

As explained in paragraph 1.6.2 provision is made for replacing the internal reference voltage by an externally generated voltage reference source. When using an internal reference, the polarity of that reference is selected opposite to that of the input signal to effect the charging and discharging action of the integrator.

Now, with an external reference this polarity selection must still operate even though that external reference may be either polarity at the rear connector.

Block diagram 1.24 outlines the essentials to achieve this polarity selection. Firstly, considering the internal references, the relay K1 is in the normally closed position and the –5V from M40 is fed to the input of unity gain inverting amplifier M41 to produce the +5V reference at the output. The +5V reference via D15 allows Q20 to switch on, this puts a LOW (0V) at pin 9 of NAND gate M42 and a HIGH (+15V) via INVERTOR M43 (pins 9 to 10) at pin 6 of second NAND GATE M42. The output of the first NAND gate M42 (pin 10) is thus held HIGH irrespective of the logic level at pin 8. Meanwhile, the HIGH at pin 6 of the second NAND gate M42 enables that gate to invert whatever logic level appears at pin 5. Similarly, the HIGH from pin 10 is fed to the input pin 12 of a NAND gate M42 which enables that gate to invert the logic level at its other input pin 13. Thus, overall from TP9 to TP10 three logic inversions occur, that being equivalent to a single inversion. As explained in paragraph 1.3.1.4 a HIGH (+15V) at TP10 selects Q6, and a LOW (0V) selects Q7 to switch the appropriate reference during the REF period.

If now external reference is selected, relay K1 connects to the normally open contact, and whatever voltage is present at the EXT REF socket passes via the X5 inverting buffer amplifier through the relay K1 to F.E.T. switch Q7 and via the unity gain inverting amplifier to Q6. If, for example, the external source is +1V, then –5V appears at Q7 and +5V at Q6, just as if the circuitry were operating normally with an internal reference. Now if the polarity only of the external source is changed then +5V is present at Q7 and –5V at Q6. But the –5V at Q6 now via D15, turns OFF Q20 which presents a HIGH to one input (pin 9) of the first NAND gate, this enables the gate to invert whatever logic level appears at the other input (pin 8). In addition the HIGH from Q20 collector via INVERTER M43 (pins 9 and 10) places a LOW at pin 6 of the second NAND gate M42 forcing a HIGH at its output (pin 4) irrespective of the level at pin 5. The HIGH now present at pin 13 of the third NAND gate M42 enables this gate to invert the level from pin 10 of the second NAND M42. Consequently, there are now from TP9 to TP10 four stages of inversion, being equivalent to non-inversion overall. Summarizing, the external reference having changed polarity means that whereas previously for a positive input signal, F.E.T. switch Q7 was selected, now for a positive input signal Q6 is selected. But, checking back, after the external reference polarity was reversed, –5V was present at Q6. Therefore, the circuit has still selected the correct reference polarity to ensure satisfactory operation.

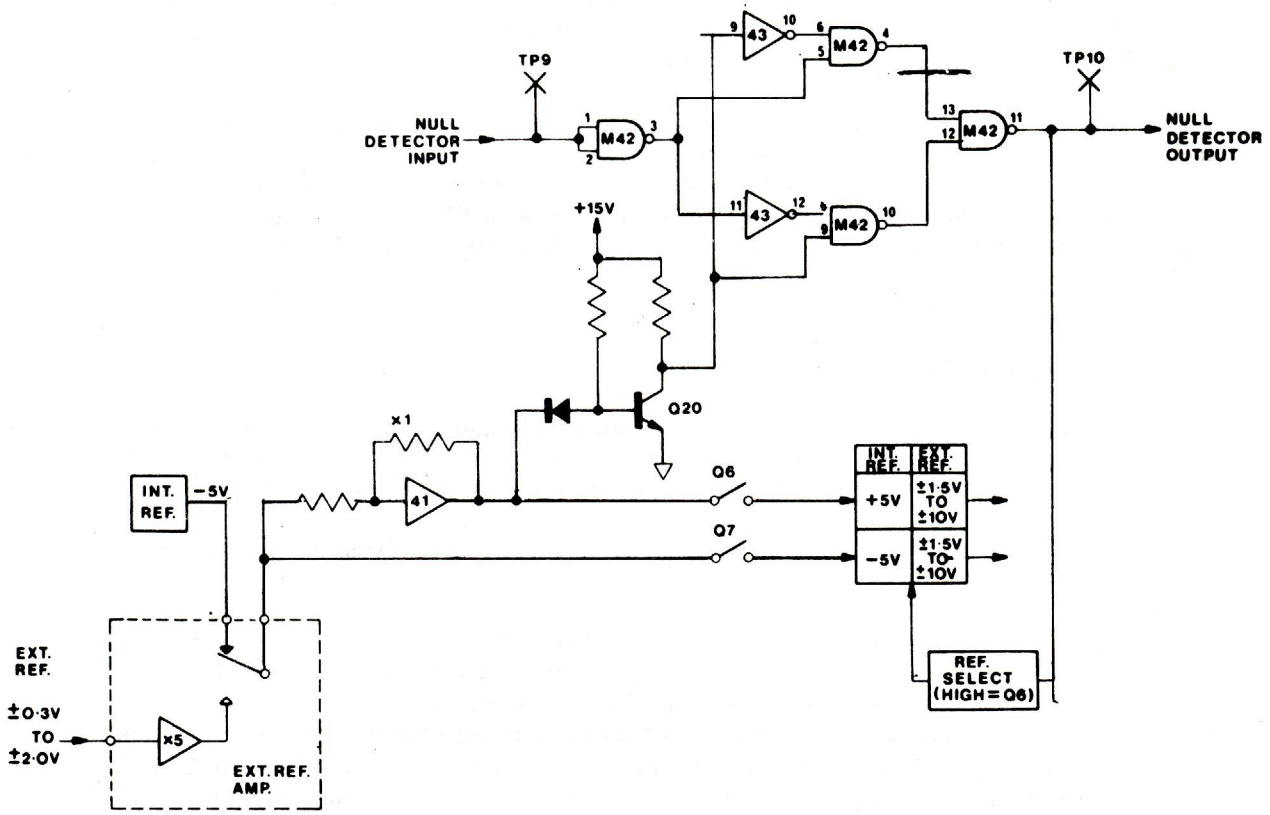

Fig. 1.24

EXTERNAL REFERENCE SWITCHING

1.3.2 Digital Section

1.3.2.1 General Principles

Block diagram Fig 1.25 outlines the essentials of the digital section and should be used with diagram 1.26 in order to follow the operation of this section.

The function of this section of the circuitry is to generate the timing pulses that when transferred to the analogue section, control the sequence from RESET to SIG to REF and back to RESET. Concurrent with this sequence, clock pulses are accumulated in a digital counter such that when the sequence is in the REF period, the number of clock pulses entering the counter is proportional to the length of that REF period, which is in turn proportional to the measured input signal. At the end of each reading cycle the count is stored and fed to the displays.

1.3.2.2 Command

To instruct the control logic to take a reading a COMMAND pulse is necessary at the Command enable flip-flop M21. COMMAND can be generated either internally by the read rate astable M27 providing for 3 readings / sec, or the front panel MANUAL switch (if HOLD is selected for single shot readings) or externally via the rear panel BCD socket for systems use. An external command signal passes via the DELAY monostable which allows adequate settling time of the analogue circuitry before taking a reading. When a COMMAND is received the Command enable flip-flop changes state which inhibits further Commands and admits 500 kHz clock pulses from the clock to the least significant digit decade counter M9 and the cascaded decade counters M4.

1.3.2.3 Counter, Latches and Multiplexing

M4 is a large scale integrated circuit which contains the main counter and store (four full decades, one overrange latch and one overload latch) and also provides a multiplexed BCD output of the count stored in the four decade latches. The fifth decade counter M9 (least significant digit) is stored by M6 and its BCD output is introduced onto the multiplexing lines every fifth step pulse from the multiplex oscillator M19, by the logic 4 pole 2 way changeover switch M3. The multiplexed lines are decoded by M2 to produce data in seven segment format.

Before a COMMAND is received and until a subsequent TRANSFER pulse arrives, the stored count from the previous reading is multiplexed out to the display, the multiplexing frequency being approx 1 kHz. The most significant digit (indicating a count of 100,000 or greater) is not multiplexed but is stored by M13 and fed directly to the most significant digit display.

1.3.2.4 Master Preset

Coincident with the first clock pulse after a COMMAND a MASTER PRESET pulse (approx 2μs) is generated and is fed to M4. This sets the 4 decade counters to all zero's and the binary overrange and overload latches to 1's (equivalent to a count of 30,000). The least significant decade M9 although receiving clock pulses is not allowed to count but is held preset at a count of 9.

1.3.2.5 Signal Integrate Period

A summary of the states of the counters during one reading cycle is shown in Fig 1.27. As mentioned, following a MASTER PRESET pulse 1's appear at the overrange and overload latch outputs of M4 and remain in this state until a further 10,000 clock pulses have been counted when the clock resets to 00,000. At 500 KHz, 10,000 clocks count defines a period of 20 ms and this period is used to determine the SIG period. At 30,000 a Start Sig timing pulse is sent to the analogue section via T3 and after another 10,000 clock pulses a step pulse is sent via T2, this terminates the SIG period and starts the REF period.

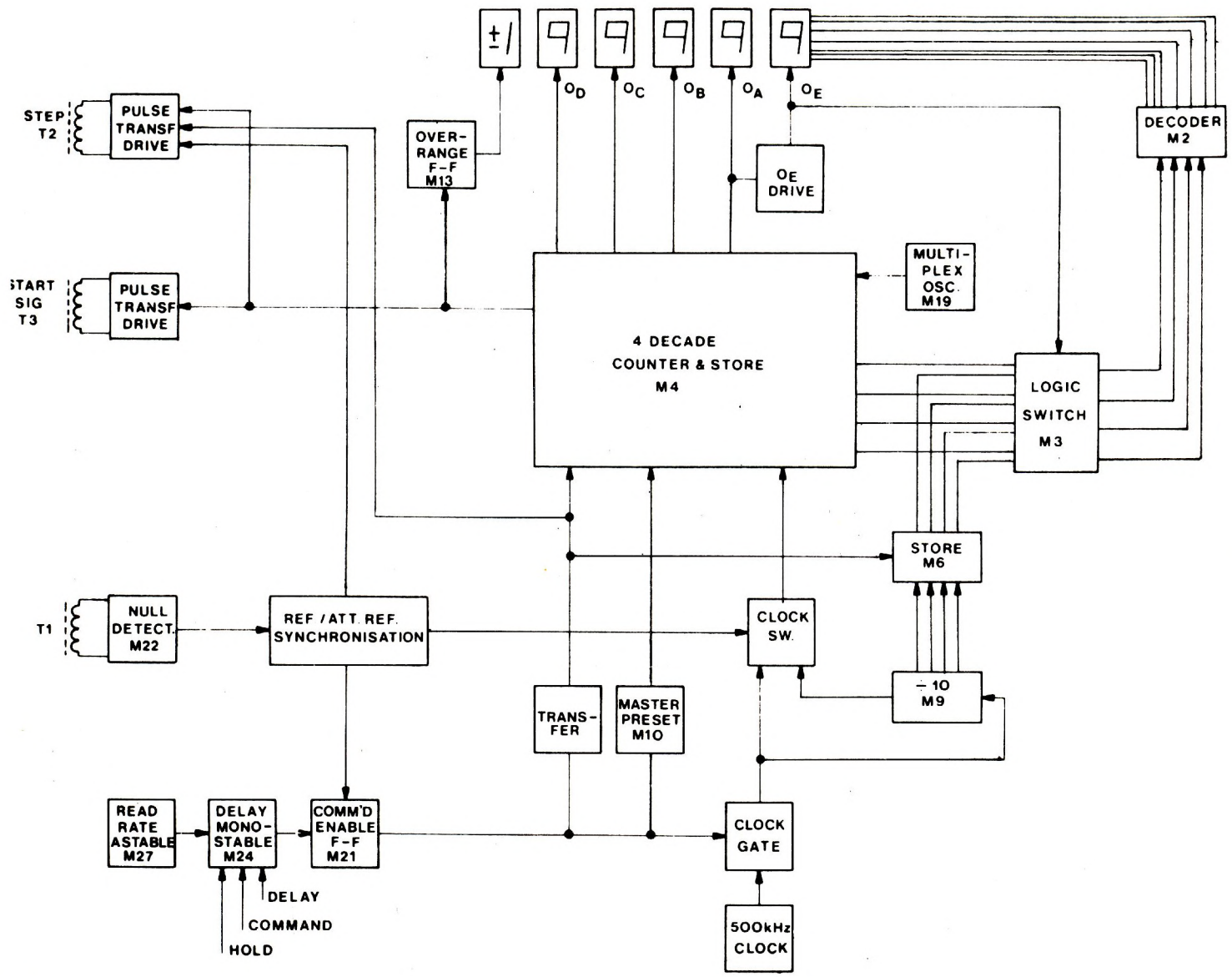

Fig. 1.25

SIMPLIFIED DIAGRAM OF DIGITAL SECTION

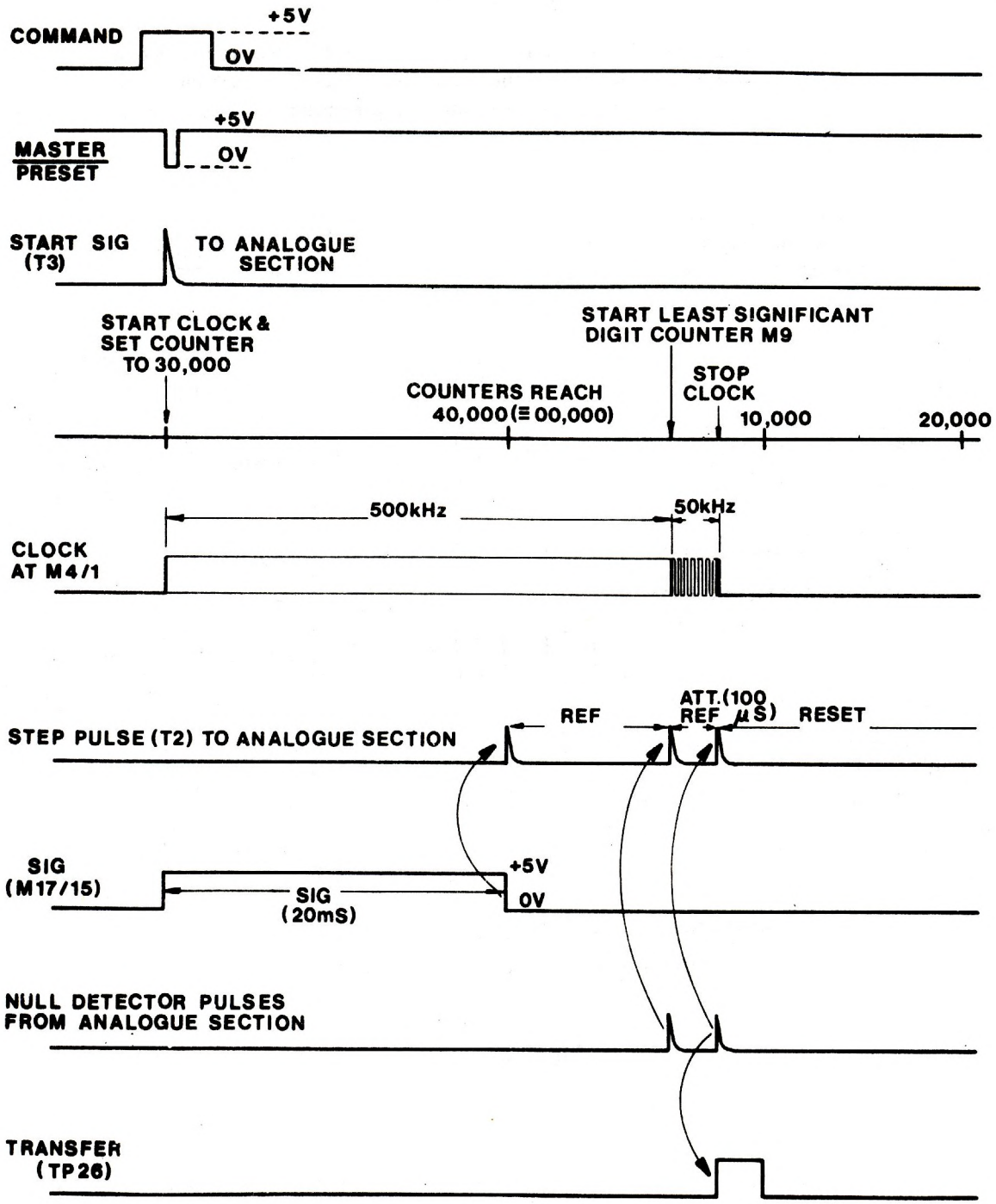

Fig. 1.26

DIGITAL SECTION TIMING DIAGRAM

1.3.2.6 Reference Integrate Period

During the REF period the clock pulses continue to accumulate in the M4 counters, M9 still being held at 9, until a null detector pulse is received from the analogue section via T1. This pulse is stored by M16 flip-flop which removes the hold on the least significant digits counter M9. In synchronism with the next clock pulse the clock input to M4 is switched from the 500 kHz clock to the output of M9 (50 KHz) and a step pulse is sent via T2 to the analogue section to start the attenuated REF period.

Clock pulses now feed the five cascaded decade counters M9 and M4 until the second null detector pulse appears at T1. This pulse is used to reset the state of the Command flip-flop M21 enabling further commands to be accepted, and the 500 kHz clock to the counters is gated out preventing further accumulation of clock pulses.

	SUMMARY OF COUNTER SEQUENCE	MOST SIGNIF. DIGIT (BINARY)	DECADES	CLOCK TO M4	LEAST SIGNIF. DIGIT	CLOCK
READING FROM PREVIOUS CYCLE		01	4573		6	CLOCK STOPPED
START SIG.	COMMAND PRODUCES MASTER PRESET WHICH SETS 30,000 AND HOLDS LEAST SIGNIFICANT DIGIT AT 9	11	00000	500kHz	9	START CLOCK 500kHz
END SIG.	AFTER 10,000 CLOCK PULSES (≙ 20mS) COUNTER AT 00,000 (≡ 40,000) LEAST SIGNIF. DIGIT STILL HELD AT 9	00	00000	500kHz	9	500kHz
START REF.	1 CLOCK PULSE LATER	00	00001	500kHz	9	500kHz
FIRST NULL DETECTOR PULSE	COUNTER HAS REACHED, FOR EXAMPLE:	01	4562	500kHz	9	500kHz
START ATT. REF.	1 CLOCK PULSE LATER	01	4563	50 kHz	0	500kHz
FINAL READING	SECOND NULL DETECTOR PULSE STOPS CLOCK & PRODUCES TRANSFER	01	4568		2	STOP CLOCK

Fig. 1.27

1.3.2.7 Transfer

When the COMMAND enable flip-flop is reset by the second null detector pulse, a TRANSFER pulse is generated by M21 to instruct the counter latches M4 and M6 to store the new count, which is then multiplexed out to the displays. Coincident with the TRANSFER pulse a third step pulse is passed via T2 to the analogue sector to start the RESET period. Both the analogue and digital sections remain in this state until the next COMMAND pulse arrives.

1.3.2.8 External Control

The internal commands from the read/rate astable may be inhibited by the $\overline{\text{HOLD}}$ external signal (via the BCD connector or front panel switch). A reading is then initiated by generating a command via the $\overline{\text{COMMAND}}$ BCD control line or the front panel MANUAL switch. This is routed via the Delay Monostable, M24. A logic '0' on the $\overline{\text{DELAY}}$ control line will automatically insert a delay equal to the settling time of the analog circuitry.

1.4 DISPLAY

The Display comprises seven segment cold cathode (Beckman – Sperry) enunciators operating from a 180V DC supply line. The complete assembly is mounted on the front of the A – D assembly and at right angles to it. The segment drive lines from the decoder driver on the A – D pass via the soldered right angle connector directly to the pins on the displays. The five decade displays are multiplexed by the anode switches Q1 to Q5. the seven segments of each decade being connected in parallel and taken to the decoder driver M2 on the A – D assembly. The decimal points DP2 to DP4 are driven by Q10 and multiplexed by Q1 to Q3 with the decade displays. The decimal point DP1, the overrange digit and the + and – indicators are multiplexed in parallel with the two least significant decades by Q4 and Q5. The inputs to the anode switches Q1 – Q5 are AC coupled from M1 buffer which is fed from M4 on the A – D assembly.

1.5 POWER SUPPLIES

1.5.1 General

The mains transformer and power supply components are situated along the right hand side of the Analogue –Digital board when viewed from the front. Transformer T4 is of toroidal construction with a split primary comprising two 115V windings. These are intended for either series or parallel connection, depending on the line voltage. An earth screen is interposed between primary and secondary windings to minimise electrostatic coupling, this is grounded to line earth. Entirely isolated from the earth screen and all windings is a further electrostatic screen fitted to act as a Guard Screen.

1.5.2 +15V, –15V and +5V Supplies

Mains Transformer T4 has three secondary windings each with its separate bridge rectifier and solid-state regulator. Outputs from M47 and M48 are connected in series to provide DC supplies required for the entire analogue circuitry throughout the instrument. These regulators are capable of 500 mA output.

The third regulator M50 produces the +5V DC supply, which is used to power all the logic circuitry in the instrument and the DC inverter for the +180V Sperry supply. This regulator is capable of 1 ampere output and all regulators include foldback current limiting and thermal shut-down, to provide short circuit protection.

1.5.3 +180V and –8V Supplies

The +180V supply is required for the seven segment cold cathode (Beckman – Sperry) displays, and the –8V for the VGG supply to PMOS integrated circuit M4.

The +180V is produced by a DC to DC converter stepping up from the +5V supply. Transistors Q40, Q41, form an astable multivibrator driving Q42 which switches the centre tap of the primary of the step-up transformer T5 to 0V at approximately 12 KHz. One side of the primary is connected via L1 to +5V and the other half of the primary acts as an auto-transformer to produce a voltage switching from +5V to –5V.

When this voltage is +5V capacitor C106 charges through R107 and D32, when the transformer voltage switches to –5V, C106 being already charged to 5V produces –10V as its negative terminal. Capacitor C107 then charges through D31 from C106. After several switching cycles the negative voltage at C107 builds up and is limited to –8.2V by Zener Diodes D33. The secondary produces a high voltage square wave which is rectified and smoothed by W4 and C108.

1.6 OPTIONS

1.6.1 B05 Three State BCD Output

This option comprises a printed circuit board which routes all the data output and command signals between the A – D converter and the 50-way Amphenol connector located on the rear panel. Each line is routed via a 3-state gate which is disabled by a logic '0' on the $\overline{\text{PRINT INHIBIT}}$ control line. This forces all outputs to a high impedance, OFF state which effectively disconnects all instrument outputs from the lines they are connected to and inhibits all input commands.

1.6.2 External Reference (Ratio)

Under normal operation the references for the analogue to digital converter are provided internally on the A – D P.C.B., and an option is available for using an external reference when required. The external reference may be in the voltage range 0.3V to 2.0V and be of either polarity, as internal circuitry senses the polarity of both signal and reference inputs and enables 4 quadrant ratio measurements to be made.

The use of an external reference enables ratio measurements of
VDC/V EXT REF, ACV/EXT REF and OHMS/V EXT REF to be made.

Provision is made for switching to an external reference by operating the 'EXT REF' switch on the rear panel. When this is selected a logic signal EXT REF is available at the BCD output socket, pin 25.

The external reference voltage should be connected to the 'EXT REF INPUT' socket.

For valid ratio measurements a x5 voltage gain is required between the external voltage reference and the voltage presented to the converter integrator (to match the X5 gain in the signal path provided by M35 on the A – D P.C.B.)

The external reference amplifier, the essential features of which are shown in Fig 1.28, provides x5 gain and presents a high impedance to the external voltage.

Amplifiers M1 and M2 are used in the non-inverting configuration producing a high input impedance. Amplifier M3 produces a differential input to single ended output conversion and gives an overall gain of X5.

The switching of internal to external reference is achieved using relay K1.

Pin connections as seen from rear.

E = Input Hi

D = Input Lo

H = Analogue Common

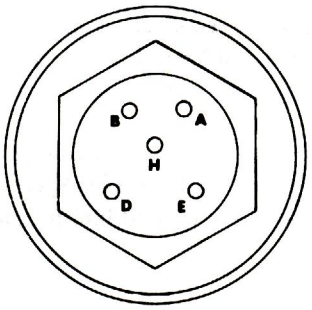

1v EXTERNAL REFERENCE RANGE

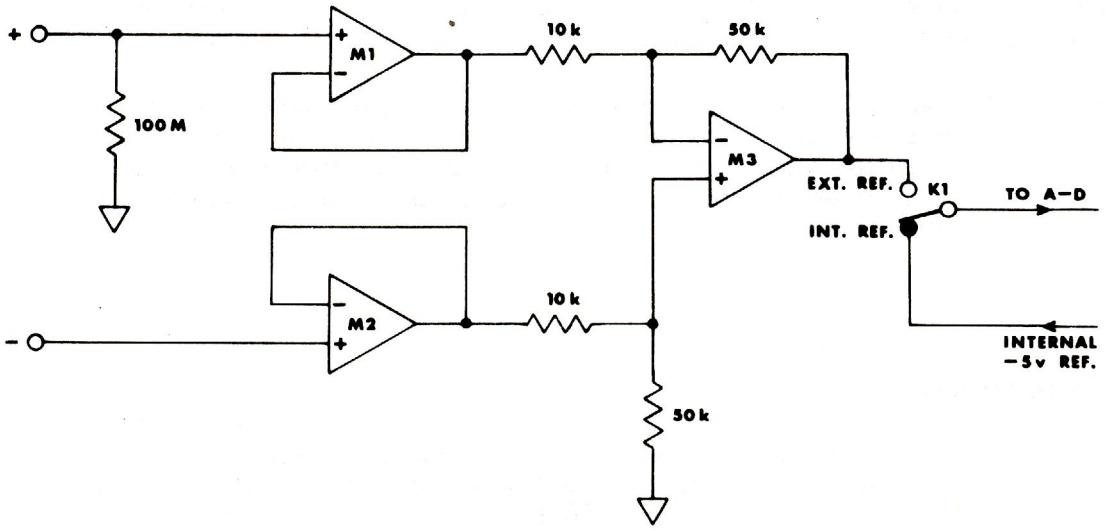

FIG 1.28 EXTERNAL REFERENCE AMPLIFIER

An alternative ratio option is available for a 3V to 20V and 30V to 200V external reference. In this case the overall gain to that external reference is x.5 and x.05 respectively, as opposed to x5 for the 0.3V to 2.0V version. Otherwise operation is as for the low voltage reference version.

Pin connections seen from rear.

10V/100V
external reference range

A – Input Hi 10V
B – Input Lo 10V
C – Input Lo 100V
E – Input Hi 100V
H – Signal input Lo

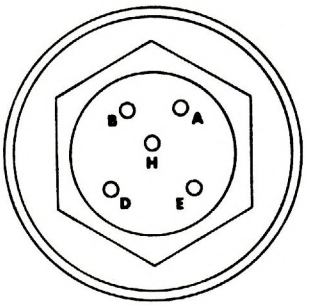

SECTION 2

MAINTENANCE

2.1 INTRODUCTION

2.1.1 General

Regular maintenance of the instrument will enable the user to have confidence in measurements made as well as ensuring the highest accuracy possible.

Normally this will consist of checking the calibration at, or before, the end of the guaranteed specification validity period and adjusting where necessary.

Section 4.2 of the Operating Manual gives a routine for checking the instrument is working within its specified accuracy and may be used as the first stage of an instrument check.

Any readings found to be grossly out of specification should be treated with suspicion as they may indicate a fault.

A routine calibration procedure is given in Section 2.2 of this manual.

Following repair or component replacement the procedures in Section 2.3.2 of this manual relevant to the repaired part should be carried out prior to performing a full routine calibration.

Before attempting any calibration it must be ensured that the test equipment is of sufficiently high accuracy. The test equipment required is specified in Section 2.2.2. It is also recommended that Section 1, Technical Description, be read before commencing, in order that some idea may be gained of the purpose and possible interaction of the various adjustments.

The circuit diagrams and printed circuit board layouts are contained in Section 4 of this manual

In case of difficulties or for general advice in servicing your instrument, do not hesitate to contract our Customer Service Department. (For the address and telephone number see the front of this manual.)

2.1.2 Removal of Covers – Access for Calibration or Repair

Access to the interior of the instrument for routine calibration, or repair, is achieved by removing the four screws securing the top cover, two screws at each side, and lifting the cover clear of the instrument. Removal of the bottom cover is achieved in an identical manner. The top cover provides access to the Analogue to Digital Converter, the Analogue Board and the External Reference option. The bottom cover provides access to the Current Converter Board and B.C.D. Output option. With both covers removed the instrument is still operational, may be inverted without component damage and full mechanical rigidity is maintained during servicing operations.

NOTE: The front panel terminals are insulated from the instrument case, enabling the internal circuitry to float at potentials greater than earth, so the potential of the internal Guard Shields can also reach dangerous levels. In addition, mains supplies appear on exposed conductors in the instrument. Therefore great care should be taken when handling an instrument with covers removed if the input terminals are connected to an external source or the mains supply is connected.

Access to the Display Board is achieved by removing the front panel. Disconnect the mains supply to the instrument and any connections to the input terminals. Remove the top and bottom covers as described in previous paragraph. Disconnect all internal leads from the input terminals. Remove the four screws fastening the front panel to the side panels, two screws each side, and the nuts from the studs on the front panel which pass through the centre screen. Draw the front panel forward until it clears the switches and remove the front panel to gain access to the Display Board (it should not be necessary to disconnect the 'power' switch).

2.2 ROUTINE CALIBRATION

2.2.1 General

The following section contains a calibration procedure which should be carried out at the end of the Specification Validity period, as stated in Section 4.1.1 of the Operating Manual, or when the instrument is found to be out of specification.

Following repair or replacement of components, complete calibration of the instrument should be carried out consisting of the part of Section 2.3.2 of this manual applicable to the repaired board followed by the routine calibration.

During routine calibration full range adjustments are, in general, all that is required to bring the calibration of the instrument well inside its specified accuracy. Linearity and zeros need only be checked to verify the performance, thus saving considerable time. This applies to all functions except d.c. voltage where resetting of linearity is advisable. Steps which are normally not necessary for a routine calibration are marked *.

In the case where a particular function is not required, or the appropriate calibrator is not available, the function need not be calibrated except for the 1 volt a.c. range (1, ACV) where a.c. current is required or, the 1 volt d.c. range (1, DCV) where d.c. current or resistance is required. Similarly, the higher voltage ranges need not necessarily be calibrated.

Calibration of functions required should always be in the sequence given.

Routine calibration should be completed at an ambient temperature of 23°C ± 1°C if the instrument is to meet its specification over the given operating range. Before commencing calibration allow 2 hours 'warm up' at this temperature with the upper and lower covers fitted in position but not fastened in place.

For the greatest accuracy and for minimum time spent calibrating, it is necessary for the boards to remain at their normal working temperature throughout calibration. Each trim adjustment is to be made as quickly as possible and in the order described. Operate the instrument in its normal operating position as much as possible (i.e. tilt the instrument in preference to turning it over when calibrating the Current Converter). Remove the covers for as short a time as possible, replace loosely after each adjustment in order to minimize thermal gradients and loss of heat in the instrument (particularly when calibrating d.c.). Check the reading has stabilized before moving to the next step in the calibration procedure.

After calibration procedure has been completed the instrument should be left in its normal operating position for at least one hour to ensure the internal temperature has fully stabilized. If the calibration procedure is now repeated it will be possible, with relatively few adjustments, to bring the instrument to optimum calibration. Steps marked* need not be completed at this final stage of calibration.

Extreme care should be exercised when handling high voltages, particularly in excess of 100V.

Refer to the 'Operating Manual', Section 5.2 if in doubt as to the correct use of 'Guard' during the calibration procedure.

2.2.2 Test Equipment Required

Test equipment specifications for fault finding, calibration and performance verification are given below. Generally, calibration sources should only be used where the accuracy specification exceeds that of the instrument by a factor of at least 4.

2.2.2.1 DC Calibrator

Output voltage ranges:	100mV*	
	1V	in 10μV increments with 100% overrange i.e. 1.99999 count.
	10V)	
	100V)	Source resistance < 1Ω
	1000V)	
Accuracy:	0.0012% reading ± 0.0005% range ± 1μV.	

*Note:– In order to overcome thermal e.m.f.'s generated in the calibrator or leads it is recommended that a precision 100:1 attenuator (< 100kΩ source), connected directly to input terminals of instrument, is used to obtain the 100mV voltage source.

2.2.2.2 AC Calibrator

Output voltage ranges:	10mV, 100mV, 1V (with 100% overrange), 10V, 100V, 1000V r.m.s.
Accuracy:	0.025% reading ± 0.025% range, 40Hz – 3kHz.
	0.05% reading ± 0.05% range, 3kHz – 30kHz.

2.2.2.3 Precision Resistors

A set of standard resistors, i.e.:–

1kΩ, 10kΩ, 100kΩ	± 0.0025%
1MΩ	± 0.0075%
10MΩ	± 0.1%

2.2.2.4 DC Voltmeter

A fully floating DC Voltmeter with 1μV resolution.

Accuracy: 0.01% reading ± 0.01% Range.

2.2.2.5 Oscilloscope

Oscilloscope with sensitivity of 10mV/division and 5MHz bandwidth. Horizontal and vertical controls calibrated to ± 5%.

2.2.2.6 Frequency Counter

A Frequency Counter capable of measuring 500,000 Hz ± 10Hz.

2.2.2.7 Current Calibrator

An AC/DC current calibrator with the following ranges:

1mA, 10mA, 100mA and 1000mA

Accuracy:	(a)	DC	0.0035% reading ± 0.0005% range (1mA, 10mA and 100mA)
			0.0075% reading ± 0.001% range (1000mA)
	(b)	AC	± 0.025% reading ± 0.025% range, 40Hz – 3kHz
			± 0.05% reading ± 0.05% range, 3kHz – 30 kHz (1mA and 10mA only)

2.2.2.8 Temperature Controlled Calibration Room

Final calibration should be completed in a temperature controlled environment of 23°C ± 1°C i.e. if the instrument is to meet the accuracy specification given in the 'Operating Manual' over the specified temperature range.

2.2.3 Procedure

2.2.3.1 General

Read Section 2.2.1 before proceeding.
All adjustments are to the Analogue Board (Assembly Drawing No. 400096) except where otherwise stated.
Other adjustments are to:–

Analogue to Digital Converter Board
(Assembly Drawing No. 400105)

Current Converter Board
(Assembly Drawing No. 400113)

External Reference (Ratio) Board, option R04
(Assembly Drawing No. 400091)

Abbreviations. T.P. – 'Test point'

w.r.t. – 'with respect to'

2.2.3.2 DC Voltage

*1) Connect the Frequency Counter (2.2.2.6) to T.P.23 w.r.t. T.P.39 on the A–D Converter Board. Adjust R112 for an indication of 500.000Hz ± 100Hz. Remove the Frequency Counter.

2) Apply a short circuit to the voltage input of the instrument. Select 10, DCV i.e. the 10V d.c. range. Adjust R38 ('pA' offset control on the front panel of the instrument) for 0.0000, bouncing polarity.

3) Select 100mV DC. Adjust R54 ('μV' offset control on the front panel of the instrument) for 0.000, bouncing polarity.

4) Select 1, DCV. Adjust R82 (A–D Converter) for .00000, bouncing polarity.

*5) Connect the DC Voltmeter (2.2.2.4) to T.P.2 w.r.t. voltage input 'Lo'. Adjust R68 for an indication of zero ± 20μV on the DC Voltmeter.

Remove the DC Voltmeter.

6) Repeat steps 2, 3 and 4 until the instrument reads zero in all ranges without further adjustment.

7) Select 100mV DC. Connect the DC Calibrator (2.2.2.1) to the voltage input of the instrument. Select the 1V range on the calibrator and apply 0.00000V. Adjust the zero control on the calibrator front panel (if available) for an indication of 0.000, bouncing polarity on the instrument.

8) Select 1, DCV. Apply +0.00010V. Adjust R80 (+ F/F on the A–D Converter) for +9 digits, bouncing +10 digits.

9) Apply –0.00010V. Adjust R81 (– F/F on the A–D converter) for –9 digits, bouncing –10 digits.

10) Apply +0.00100V. Adjust R46 ('100 digits' on the A–D Converter) for +100 digits.

11) Repeat steps 4, 8, 9 and 10 until all readings are correct without further adjustment.

12) Apply +1.00000V. Adjust R76 ('+1V' on the A–D Converter) for +1.00000 ± ½ digit (i.e. a worst case reading of +1.00000 bouncing +.99999 or +1.00000 bouncing +1.00001).

13) Apply –1.00000V. Adjust R78 ('–1V' on the A–D Converter) for –1.00000 ± ½ digit.

14) Apply +1.90000. Check the reading is +1.90000 ± 5 digits.

15) Apply –1.90000. Check the reading is –1.90000 ± 5 digits.

16) Apply +0.01000V. Check the reading is +.01000 ± 1 digit.

17) Apply –0.01000V. Check the reading is –.01000 ± 1 digit.

18) Apply +0.10000V. Check the reading is +.10000 ± 1 digit.

19) Apply –0.10000V. Check the reading is –.10000 ± 1 digit.

20) Select 100mV DC. Connect the DC Calibrator to the input via the 100:1 attenuator (see note in Section 2.2.2.1). Apply zero input. Allow any thermals to stabilize then adjust R54 ('μV' offset control on the front panel of the instrument) for 0.000, bouncing polarity.

21) Apply +100.00mV to the input of the instrument (i.e. +10V selected on the DC Calibrator). Adjust R65 for +100.000 ± 2 digits.

22) Apply –100.00mV to the input of the instrument. Check the instrument reads –100.000 ± 4 digits. Remove the DC Calibrator and 100:1 attenuator.

23) Connect the 10MΩ resistor (2.2.2.3) to the voltage input terminals. Check the reading settles to less than 450 digits. Remove the 10MΩ resistor.

24) Select 10, DCV. Connect the DC Calibrator (2.2.2.1) to the voltage input terminals. Apply +10.0000V. Adjust R13 for +10.0000 ± ½ digit (i.e. a worst case reading of +10.0000 bouncing to +9.9999 or +10.0000 bouncing +10.0001).

25) Apply –10.0000V. Check the reading is –10.0000 ± 2 digits.

26) Select 100, DCV. Apply +100.000V. Adjust R9 for a reading of +100.000 ± ½ digit.

27) Apply –100.000V. Check the reading is –100.000 ± 2 digits.

28) Select 1000, DCV. Apply +500.00V. Adjust R5 for +500.00V ± ½ digit.

29) Apply +1000.00V. Check the reading is +1000.00 ± 6 digits.

NOTE:– When applying 1000V:–

i) Check the DC Calibrator (2.2.2.1) does not exhibit excessive overshoot (i.e. < 10%) whenthe 1000V range is selected. If in doubt, or if overshoot is excessive, increase output from calibrator gradually in 100V steps. Transients exceeding the maximum working voltage may cause internal damage.

ii) Switch DC Calibrator for zero output before applying the opposite polarity – since a 2000V edge (i.e. from +1000V to –1000V) may damage the instrument.

iii) Take care to ensure that greater than 500V is not applied between input 'Lo' and earth.

30) Apply –1000.00V. Check the reading is –1000.00V ± 6 digits.

31) Switch the DC Calibrator to zero output. Remove the DC Calibrator.

2.2.3.3. Resistance

32) Apply a short circuit to the resistance input terminals. Select 1kΩ. Adjust R45 for an indication of .00000 ± 1 digit.

NOTE: If long leads to the precision resistors are to be used their resistance must be accounted for either by nulling out their lead resistance i.e. by applying them as the short circuit in step 32 or, by calibrating the instrument high by the amount of measured lead resistance.

*33) Select 10, kΩ. Check the reading is 0.0000 ± 1 digit.

*34) Select 100, kΩ. Check the reading is 0.000 ± 1 digit.

*35) Select 1000, kΩ. Check the reading is 0.00 ± 1 digit.

*36) Select 10MΩ. Check the reading is 0.0000 ± 1 digit. Remove the short circuit from the input.

37) Select 10, kΩ. Apply the 10kΩ Standard Resistor (2.2.2.3) to the resistance input. Adjust R72 for a reading of 10.0000 ± 1 digit.

Remove the 10kΩ Standard Resistor.

38) Select 1, kΩ. Apply the 1kΩ Standard Resistor (2.2.2.3) to the resistance input. Adjust R15 for a reading of 1.00000 ± 2 digits.

Remove the 1kΩ Standard Resistor.

39) Select 100, kΩ. Apply the 100kΩ Standard Resistor (2.2.2.3) to the resistance input. Adjust R11 for a reading of 100.000 ± 2 digits.

Remove the 100kΩ Standard Resistor.

*40) Apply the 10kΩ Standard Resistor (2.2.2.3) to the resistance input. Check the reading is 10.000 ± 1 digit.

Remove the 10kΩ Standard Resistor.

*41) Apply the 1kΩ Standard Resistor (2.2.2.3) to the resistance input. Check the reading is 1.000 ± 1 digit.

Remove the 1kΩ Standard Resistor.

42) Select 1000, kΩ. Apply the 1MΩ Standard Resistor (2.2.2.3) to the resistance input. Adjust R7 for a reading of 1000.00 ± 3 digits.

43) Select 10MΩ. Adjust R84 for a reading of 1.0000 ± 5 digits.

Remove the 1MΩ Standard Resistor.

44) Apply the 10MΩ Standard Resistor (2.2.2.3) to the resistance input. Check the reading settles to 10.0000 ± 250 digits.

Remove the 10MΩ Standard Resistor.

45) If the instrument has been zeroed as described in step 32, with long leads:

Select 1, kΩ. Apply a short circuit link to the resistance input. Adjust R45 for an indication of .00000 ± 2 digits.

2.2.3.4 AC Voltage

*46) Select 1, ACV. Apply short circuit to voltage input. Connect the DC voltmeter (2.2.2.4) to T.P.6 w.r.t. 'Voltage' input 'Lo'. Adjust R105 for an indication of zero ±50μV on the DC voltmeter.

Remove the Dc voltmeter.

*47) Apply a short circuit to the voltage input terminals. Connect the Oscilloscope (2.2.2.5) set to 100mV/division, to T.P.8 w.r.t. 'Lo'. Adjust R119 for an indication of zero.

NOTE: Due to the high gain of this non-linear circuit at zero, the output will appear very 'noisy' as zero is approached. The best zero is obtained when this noise is symmetrical about zero.

Remove the Oscilloscope.

*48) Connect the DC voltmeter (2.2.2.4) to T.P.9 w.r.t. 'Lo'. Adjust R131 to obtain a positive indication on the DC voltmeter of approximately +0.3V. (This should correspond to a minimum reading on the instrument's display).

*49) Connect the DC voltmeter to T.P.11 w.r.t. 'Lo'. Adjust R147 for an indication on the DC voltmeter of −1mV ± 0.1mV.

Remove the DC voltmeter.

*50) Connect the Oscilloscope (2.2.2.5) to T.P.12 w.r.t. 'Lo'. Adjust R150 for a 'noisy' zero.

Remove the Oscilloscope.

*51) Adjust R147 for a reading of .00000 ± 2 digits on the display.

Remove the short circuit from the voltage input.

*52) Connect the AC Calibrator (2.2.2.2) to the voltage input of the instrument. Apply 10mV r.m.s., 300Hz Adjust R131 for a reading of .00990 ± 3 digits.

Remove the AC Calibrator.

*53) Repeat step 47.

Remove the short circuit from the input.

54) Select 1, DCV + ACV. Connect the DC Calibrator (2.2.2.1) to the voltage input.

i) Apply +1.00000V. Note the reading.

ii) Apply –1.00000V. Adjust R126 for the same reading as obtained in 54(i) ± 20 digits.

Remove the DC Calibrator.

55) Select 1, ACV. Connect the AC Calibrator (2.2.2.2) to the voltage input. Apply 1V r.m.s. 300Hz. Adjust R157 for 1.00000 ± 10 digits.

Remove the AC Calibrator.

*56) Repeat in sequence given, steps 47, 52, 54 and 55 until all readings are correct without further adjustment.

57) Connect the AC Calibrator (2.2.2.2) to the voltage input. Apply 1.9V r.m.s., 300Hz. Check the reading is 1.90000 ± 100 digits.

58) Apply 100mV r.m.s., 300Hz. Check the reading is .10000 ± 50 digits.

59) Apply 1mV r.m.s., 300Hz. Check the reading is .00100 ± 50 digits.

Remove the AC Calibrator.

60) Apply short circuit input. Check the reading is .00000 ± 50 digits.

Remove the short circuit input.

61) Connect the AC Calibrator (2.2.2.2) to the voltage input. Apply 1V r.m.s., 30kHz. Adjust C40 for a reading of 1.00000 ± 10 digits.

62) Apply 1V r.m.s. at the following frequencies and check the response-

3kHz;	1.00000	±	50 digits
300Hz;	1.00000	±	20 digits
40Hz,	1.00000	±	50 digits

CAUTION: High voltages may appear on the input attenuator trimmers C2, C4 and C7. Only an adjusting tool which has a totally insulated body (to higher than the maximum output voltage capability of the A.C. Calibrator, 2.2.2.2) should be used. DO NOT use an insulated handle screw driver.

63) Select 1000, ACV. Apply 700V r.m.s., 3kHz. Adjust C7 for a reading of 700.00 ± 10 digits.

64) Apply 100V r.m.s., 3kHz. Select 100, ACV. Adjust C4 for a reading of 100.000 ± 10 digits.

65) Apply 10V r.m.s., 3kHz. Select 10, ACV. Adjust C2 for a reading of 10.0000 ± 10 digits.

66) Repeat steps 63, 64 and 65 until the specified reading is obtained at each step without further adjustment.

67) Select 1000, ACV. Apply 700V r.m.s. and check the frequency response at the following frequencies:

3kHz;	700.00	±	100 digits
300Hz;	700.00	±	100 digits
40Hz;	700.00	±	100 digits

If necessary, re-adjust C7 to give the best average accuracy over this band.

68) Apply 100V r.m.s. Select 100, ACV and check the frequency response at the following frequencies:

30kHz;	100.000	±	200 digits
3kHz;	100.000	±	100 digits
300Hz;	100.000	±	100 digits
40Hz;	100.000	±	100 digits

If necessary, re-adjust C4 to give the best averaged accuracy over this band.

69) Apply 10V r.m.s. Select 10, ACV and check the frequency response at the following frequencies:

30kHz;	10.0000	±	200 digits
3kHz;	10.0000	±	100 digits
300Hz;	10.0000	±	100 digits
40Hz;	10.0000	±	100 digits

If necessary, re-adjust C2 to give the best averaged accuracy over this band.

Remove the AC Calibrator.

2.2.3.5 DC Current:

70) Select 1, DCI. Connect the Current Calibrator (2.2.2.7) to the current input terminals. Apply +1mA. Adjust R17 on the Current Converter Board for a reading of +1.00000 ± 1 digit.

NOTE: A common gain adjustment, R60 is provided in the d.c. isolator which should not normally require adjustment. If, however, the x2 feedback network in the d.c. isolator has been disturbed it may be found that the four range adjustments on the Current Board are at the extent of their travel and the ranges cannot be calibrated. In this instance R60 should be adjusted so that all range adjustments are brought back to approximately the centre of their spans and the calibration procedure repeated.

71) Apply –1mA. Check the reading is –1.00000 ± 5 digits.

72) Select 10, DCI. Apply +10mA. Adjust R12 (Current Board) for a reading of +10.0000 ± 1 digit.

73) Apply –10mA. Check the reading is –10.0000 ± 5 digits.

74) Select 100, DCI. Apply +100mA. Adjust R9 (Current Board) for a reading of +100.000 ± 1 digit.

75) Apply –100mA. Check the reading is –100.000 ± 5 digits.

76) Select 1000, DCI. Apply +1000mA. Adjust R6 (Current Board) for a reading of 1000.0 ± 1 digit.

77) Apply –1000mA. Check the reading is –1000.00 ± 5 digits.

*78) Select 1, DCI. Increase the input current to the instrument and check that the protection relay 'drops out' and the display blanks when the input current is greater than 2.5mA and less than 3mA. Immediately the display blanks remove the overload, check the protection relay 'pulls in' and the display is no longer blanked after a period of greater than 8 seconds and less than 15 seconds.

2.2.3.6 AC Current:

79) Select 10, ACI. Apply 10mA r.m.s. 300Hz. Adjust R115 for an indication on the display of 10.0000 ± 20 digits.

80) Apply 10mA r.m.s. at the following frequencies and check the frequency response:

30kHz;	10.0000	±	200 digits
3kHz;	10.0000	±	100 digits
300Hz;	10.0000	±	100 digits
40Hz;	10.0000	±	100 digits

81) Select 1, ACI. Apply 1mA r.m.s. at the following frequencies and check the frequency response:

30kHz,	1.00000	±	200 digits
3kHz;	1.00000	±	100 digits
300Hz,	1.00000	±	100 digits
40Hz;	1.00000	±	100 digits

82) Select 100, ACI. Apply 100mA r.m.s. at the following frequencies and check the response:

3kHz;	100.000	±	100 digits
300Hz;	100.000	±	100 digits
40Hz;	100.000	±	100 digits

83) Select 1000, ACI. Apply 1000mA r.m.s. at the following frequencies and check the response:

3kHz;	1000.000 ±	100 digits
300Hz;	1000.000 ±	100 digits
40Hz;	1000.000 ±	100 digits

*84) Select 1, ACI. Increase the input current (at 300Hz) to the instrument and check that the protection relay 'drops Out' and the display blanks when the input current is greater than 2.4mA r.m.s. (sine) and less than 3.6mA r.m.s.

Remove the Current Calibrator.

2.2.3.7 External Reference:

The following steps only apply when External Reference (ratio), option R04 is fitted.

Polarity Quadrant definitions:–

Quadrant 1 – positive signal, positive external reference
2 – positive signal, negative external reference
3 – negative signal, positive external reference
4 – negative signal, negative external reference

85) Select External Reference on the rear panel slide switch. Select 1, DCV. Connect the DC Calibrator (2.2.2.1) to the voltage input terminals on the front panel of the instrument and the external reference 'Signal Inputs' to obtain a voltage ratio as defined by quadrant 1 when positive signal is applied.

86) Apply +0.3V and –0.3V alternatively (i.e. from quadrant 1 to 4) and adjust R24 (on the External Reference Board) to obtain the same reading on the display ± 2 digits for both quadrants (allow adequate settling time when changing quadrants).

87) Apply +2V and adjust R14 (on the External Reference Board) for a reading on the display of 1.00000.

88) Connect the external reference 'Signal Inputs' to obtain a voltage ratio as defined by quadrant 2 when a positive signal is applied. Select External Reference.

Apply +0.3V and –0.3V alternatively (i.e. from quadrant 2 to quadrant 3) and adjust R79 ('Ref Zero' on the A–D Converter Board) to obtain the same reading on the display ± 2 digits for both quadrants.

89) Select Internal Reference. Apply –1V. Adjust R78 ('–1V' on the A–D Converter Board) for a reading of –1.00000 ± ½ digit.

90) Select External Reference. Apply –2V (i.e. in quadrant 3) and adjust R19 (on the External Reference Board) for a reading on the display of –1.00000.

91) Repeat steps 88 to 89 until the readings are correct without any further adjustment.

92) Repeat steps 85 to 90 until the readings are correct without any further adjustment.

This completes the routine calibration procedure and the covers should be secured.

2.3 REPAIR AND COMPONENT REPLACEMENT

2.3.1 General

IT IS RECOMMENDED THAT THIS SECTION BE NOTED BEFORE UNDERTAKING ANY REPAIR.

A fault in the analogue circuitry will require the internal Guard Shields removing for access to the components and subsequent recalibration. Digital integrated circuits are fitted in sockets and can be replaced without disturbing the calibration of the instrument (although it is advisable to verify the performance after any component change).

The method of manufacture evolved by DATRON to ensure high reliability and stability involves elevated temperature 'burn-in' at both component and instrument level. In addition, operational amplifiers and other devices are selected for certain parameters. Hence many of the components used, although were originally of a standard type, have a performance which can only be identified by a DATRON part number. These devices are held as stock items by DATRON who should be contacted if replacement is necessary.

Replacement of certain active devices and precision resistors also necessitates the re-selection of their associated F.S.V. [Factory Selected Value] resistors to accommodate component tolerances. These resistors, often high stability, metal film types are used to preset an offset or reference setting, usually with fine adjustment provided by an associated potentiometer. Procedures for selecting these resistors are given in Section 2.3.2.

Replacement of analog components should be followed by recalibration of the relevant part of the circuit as described in Section 2.3.2. Full routine calibration should then be carried out to ensure the instrument is within specification – if in any doubt consult our Customer Service Department.

When replacing semiconductor devices take great care to avoid overheating them during soldering . . . each joint being made as rapidly as possible. Although the use of a thermal shunt between semiconductor device and the soldered joint is strongly recommended, it is realised that it is impractical to use one in many instances . . . particularly when unsoldering a multi-lead device from a high density circuit board, a suction de-soldering tool is recommended.

When working on the isolator board, special consideration should be given to the effects of board leakage. Although active guarding is used extensively to reduce these effects, it should be borne in mind because of the high input impedance and sensitivity involved.

2.3.2 Adjustments following component replacement

These procedures should be carried out with all boards mounted in the instrument. Guard shields should be removed to enable F.S.V's to be changed where necessary. (This will make the instrument slightly more 'noisy' than in normal operation with the shields fitted.)

Before proceeding with any adjustments the instrument should be allowed a 30 minute warm-up period after switch on.

NOTE:– A small amount of interaction exists between certain controls, also the adjustment of certain controls has an effect which may not be immediately noticeable, i.e. zero drift with temperature. The user is therefore warned not to follow blindly all the sequences described, but to read and understand the reason behind each procedure, before embarking upon any actual adjustments on his own account. This approach should minimize the amount of time spent on recalibration, and in a number of instances, will eliminate upsetting preset adjustments which are already correctly set.

When the necessary procedures have been completed all F.S.V. resistors should be soldered in position, the guard shields re-fitted, the instrument covers placed, but not secured, in position and a routine calibration carried out as specified in Section 2.2.

2.3.2.1 Special Test Equipment

HIGH CREST FACTOR SIGNAL

A precision pulse train of approximately 5:1 crest factor and 100Hz repetition frequency. The d.c. coupled output level to be 1V r.m.s. ± 0.05%.

NOTE: This item is only required for the a.c. voltage procedure to set the linearity of the r.m.s. converter for a high crest factor signal. Advice on construction of a suitable piece of test equipment is available from our Customer Service Department.

TEMPERATURE CONTROLLED OVEN
A Temperature Controlled Oven capable of maintaining the instrument at a known temperature of approximately 50°C. Preferably with glass inner door, if available.

THERMOMETER
A Thermometer to read the ambient temperature.

NOTE: The above two items are only necessary after replacement of M9 on the Analogue Board.

HEAT SOURCE
A temperature controlled heat source to heat an integrated circuit (TO–5 can) to a case temperature of 30°C ± 3°C above ambient.

NOTE: This item is only necessary when M1, M2 or M3 has been replaced on the External Reference option.

2.3.3 Analogue to Digital Converter Board – Assembly Drawing No. 400105

Adjustments and calibration are to the A–D Converter Board unless otherwise stated.

Equipment required is as specified in Section 2.2.2.1, 2.2.2.4, 2.2.2.5, 2.2.2.6.

1) Set all preset potentiometers to the centre of their span. Ensure that R88 and R96 are fitted (100MΩ). In the case where Q1 has been replaced, remove the protection link on the device. Switch out S1. S2 and S3. Select 1, DCV on the Analogue Board and apply short circuit to voltage input.
2) Connect the D.C. Voltmeter to T.P. 33 w.r.t. (with respect to) T.P. 39. Check the voltage is +5V ±0.25V.
3) Connect the D.C. Voltmeter to T.P. 32 w.r.t. T.P. 39. Check the voltage is –8.2V ± 0.3V.
4) Connect the D.C. Voltmeter to the positive end of C108 w.r.t. T.P. 39. Check the voltage is 165V ± 20V.
5) Connect the D.C. Voltmeter to the output pad 6 at the rear of the board w.r.t. T.P. 19. Check the voltage is +15V ± 0.75V.
6) Connect the D.C. Voltmeter to the output pad 4 at the rear of the board w.r.t. T.P. 19. Check the voltage is –15V ± 0.75V.
7) Connect the D.C. Voltmeter to T.P. 12 w.r.t. T.P. 19. Check the voltage is –10V ± 1V.
8) Connect the D.C. Voltmeter to T.P. 4 w.r.t. T.P. 19. Check the voltage is +11V ± 0.5V.
9) Connect the D.C. Voltmeter to T.P. 2 w.r.t. T.P. 19. Check the voltage is –5V +0V, –0.25V.
10) Connect the D.C. Voltmeter to T.P. 3 w.r.t. T.P. 19. Check the voltage is +5V +0.25V, –0V.
11) Connect the Oscilloscope to M47 input (pin nearest rear of board) w.r.t. T.P. 19. Check for 100Hz ripple (not 50Hz – i.e. the rectifier bridge, W2, is working correctly).
12) Connect the Oscilloscope to M48 input (pin nearest rear of board) w.r.t. T.P. 19. Check for 100Hz ripple (not 50Hz – i.e. the rectifier bridge, W3, is working correctly).
13) Connect the Oscilloscope to M50 input (pin nearest rear of board) w.r.t. T.P. 39. Check for 100 Hz ripple (not 50Hz – i.e. the rectifier bridge, W1, is working correctly).
14) Connect the Oscilloscope to T.P. 23 w.r.t. T.P. 39. Check for clock pulses of approximately 2μS period, 5V amplitude.
15) Connect the Frequency Counter to T.P. 23 w.r.t. T.P. 39. Adjust R112 to produce a clock frequency of 500kHz ± 100 Hz.
16) Connect the Oscilloscope to M21, 6 w.r.t. T.P. 39. Check for 'Command' pulses of approximately 100μS duration and repetition frequency of 3/second. These should be of approximately 5V amplitude.
17) Press 'HOLD' switch S1, and observe that 'Command' pulses observed in step 16 disappear. Release S1.
18) Connect the Oscilloscope to T.P. 24 w.r.t. T.P. 39. Check for 'Sig' pulses, negative going, of 20mS duration. These should be of approximately 5V amplitude.
19) Connect the Oscilloscope to T.P. 11 w.r.t. T.P. 19. Check for 'Sig' pulses, negative going, of 20mS duration. These should be of approximately 30V amplitude.
20) Press 'HOLD' switch, S1. Check that 'Sig' pulses observed in step 19 disappear and the voltage at T.P.11 is steady at approximately +15V (i.e. the analogue section of the A–D Converter is in the 'Reset' condition).
21) Connect the Oscilloscope to T.P.1 w.r.t. T.P.19. Adjust R3 for less than 50mV. (Allow sufficient time for 'Reset' to come out of saturation.)
22) Connect the Oscilloscope to T.P.10 w.r.t. T.P.19. Adjust R82 to produce a noisy signal of amplitude from 0V to +15V.

23) Connect the Oscilloscope to T.P.28 w.r.t. T.P.39. Check for a noisy signal, similar to that obtained in step 22, of 5V amplitude.

24) Release 'HOLD' switch S1. The display on the instrument should read all zeros ±30 digits. Adjust R82 for a display of ±.00000, bouncing polarity. If it is not possible to achieve this, then it is acceptable to set R82 for bouncing polarity only (e.g. +4 bouncing to –3).

25) Select:

(a) all 'Ranges' in turn. Check:–

(i) When '1' (DCV) is selected that d.p.1 is 'on' i.e. the display is ±.0000X (X need not be zero).

(ii) When '10' is selected that d.p.2 is 'on' i.e. the display is ±0.000X.

(iii) When '100' is selected that d.p.3 is 'on' i.e. the display is ±*0.00X (* represents leading zero digit which is 'off').

(iv) When '1000' is selected that d.p.4 is 'on' i.e. the display is ±**0.0X.

(b) 100 mV D.C. Check as (a)(iii)

(c) 10MΩ. Check as (a)(ii)

26) Select all 'Functions' in turn and check that the polarity sign is only displayed in the D.C. functions.

27) Switch to 1. DCV. Apply a.d.c. input signal of greater than 2V and check that the display blanks without leaving any digit segments or decimal points glowing ('keep-alive' cathodes will still be illuminated but these should be masked by tape).

28) Apply + 1.9V to the input terminals. Check that the display segments are of equal brightness and free from 'streamers' (ionization of display where not required).

29) Press 'HOLD' switch. S1. Connect the Oscilloscope to T.P.9 w.r.t. T.P.19. Check the wideband noise level and 100 Hz content is less than 400 mV peak to peak. (A reduction in the 100Hz content may be achieved by slackening the mounting screw and rotating the mains transformer. T4 if noise is in excess of 400mV peak to peak).

30) Apply short circuit input. Select 1, DCV. Adjust R82 for .0000X. bouncing polarity.

31) Press momentarily, 'MANUAL' switch. S2. Check that another reading is taken.

32) Apply +1V. Select, F'S'V' resistors R70 and R71 to obtain a display of +1.00000 ±20 digits (If value of R70 or R71 is less than 1MΩ, use 50ppm/°C metal film resistors).

33) Apply –1V. Select F.S.V. R43 (typically 3M3) and adjust R78 for a display of –1.00000 ±20 digits.

34) Recheck step 30.

35) Apply +100μV. Adjust R80 to produce a display of +.00009 to +.00010.

NOTE. If the span of R80 is insufficient, return R80 to mid-travel and select F.S.V. R94 to produce a display of +.00010 ±3 digits, then use R80 to produce a display of +.00009 to +.00010.

36) Apply +1mV. Adjust R46 to produce a display of +.00100 ±1 digit.

37) Repeat steps 34 to 36 until no further adjustment is necessary.

38) Apply 100μV. Adjust R81 for a display of .00009 to +.00010.

39) Apply short circuit input. Check that the display reads zero ± 1 digit.

40) Apply short circuit input. Select 10. DCV. Adjust R38 'pA' offset control on front panel of instrument for ± 0.0000, bouncing polarity.

41) Select 100mV D.C. Adjust R54 'μV' offset control on front panel of instrument for ± 0.000, bouncing polarity.

42) Select 1. DCV. Adjust R82 for a reading of ± .00000, bouncing polarity.

43) Repeat steps 40, 41 and 42 until the instrument reads zero in all ranges without further adjustment.

44) Repeat steps 35, 36, 38 and 42 until all readings are correct without any further adjustment.

45) Apply + 1V. Adjust R76 for a reading of +1.00000 ± 2 digits.

46) Apply –1V. Adjust R78 for a reading of –1.00000 ± 2 digits.

47) Apply + 1.9V. Note the reading on the display.
   (a) If the display is (reading in step 45 x 1.9) ± 4 digits, then proceed to 48.
   (b) If the display is greater than (reading in step 45 x 1.9) + 4 digits, then:–
      (i) Cut out R96
      (ii) Select F.S.V. R89 (try 1MΩ initially). Reducing R89 will reduce reading.
      (iii) Repeat from step 45.
   (c) If the display is less than (reading in step 41 x 1.9) 4 digits, then:
      (i) Cut out R88.
      (ii) Select F.S.V. R89 (try 1MΩ initially). Reducing R89 will increase reading.
      (iii) Repeat from step 45.

48) Apply -1.9V. The reading on the display should be (reading in step 46 x 1.9) ± 4 digits.

49) Apply short circuit input. Check the display for noise at zero. This should be less than ½ digit e.g. .00001 bouncing .00002.

50) Apply +1V. Check the display for noise at 1V. This should be less than 1 digit e.g. +1.00000 through +1.00001 to +1.00002.

51) Apply +1.9V. Check the display for noise at 1.9V. This should be less than 1 digit e.g. +1.90002 through +1.90003 to +1.90004.

2.3.4 Analogue Board – Assembly Drawing No. 400096

Adjustments and calibration are to the Analogue Board unless otherwise stated.

2.3.4.1 Preliminary Checks

1) Select all 'Functions' in turn. Check:–
   a) The polarity sign on the display is displayed in the following 'Functions' only: 100mV DC, DCV and DCI.
   b) In 100mV DC check d.p. (decimal point) 3 is 'on'. (Instruments display.)
   c) In 10MΩ check d.p. 2 is 'on'.
   d) The appropriate L.E.D. (light emitting diode) is 'on'.
   e) The 'Range' L.E.D. is cancelled when 100mV DC or 10MΩ is selected.

2) Select DCV, then select all 'Ranges' in turn. Check: –

a) When '1' is selected, check d.p. 1 is 'on'.

b) When '10' is selected, check d.p. 2 is 'on'.

c) When '100' is selected, check d.p. 3 is 'on'.

d) When '1000' is selected, check d.p. 4 is 'on'.

e) The appropriate L.E.D. is 'on' (except in 100mV DC or 10MΩ).

2.3.4.2 DC Voltage

Equipment required is as specified in Sections 2.2.2.1, 2.2.2.4, 2.2.2.5.

1) Select 1, DCV. Apply short circuit to the voltage input terminals. Check the bootstrapped supplies are present at T.P. (test point) 3 (+10V) and T.P.5 (–10V) w.r.t. (with respect to) T.P. 2 (B.S. common).

Check the supplies do not oscillate with the Oscilloscope.

2) Check with Oscilloscope no oscillation occurs at T.P.6 when the following are selected:

100mV DC; 1, DCV; 10, DCV.

3) Where the dc isolator, M9 has been replaced complete steps 1) to 4) of the Zero Drift Compensation procedure, Section 2.3.4.3.

4) Select 100mV DC. Short together the pins marked 'GND I/P' on the analogue board. Connect the DC Voltmeter to T.P.2 w.r.t. T.P.15 and adjust R68 for an indication of zero ± 20μV on the DC Voltmeter. Remove the DC Voltmeter.

5) Set the 'μV' offset potentiometer, R54 on the front panel of the instrument to the centre of its span. Set the instruments display to 0.000 ± 20 digits by selection of F.S.V. resistors R50, R51 and a link between R50 and +BS or –BS. Use metal film resistors (50ppm/°C) if total resistance of R50 and R51 is below 1MΩ.

6) Adjust R54 for an indication of 0.000, bouncing polarity.

7) Remove the short circuit from the 'GND I/P' pins and replace with a short across the voltage input terminals.

8) Select 10, DCV. Adjust the 'pA' offset control, R38 on the front panel of the instrument for 0.0000, bouncing polarity.

9) Select 100mV DC. Adjust R54 for an indication of 0.000, bouncing polarity.

10) Select 1, DCV. Adjust R82 (on the A–D Converter) for .00000, bouncing polarity.

11) Repeat steps 8, 9 and 10 until the instrument reads zero at all steps without further adjustment.

12) Select 1, DCV. Apply +.00010V, adjust R80 ('+F/F' on the A–D Converter) for +9, bouncing +10 digits.

13) Apply –.00010V, adjust R81 ('–F/F' on the A–D Converter) for –9, bouncing –10 digits.

14) Apply + .00100V, adjust R46 ('100 digits' on the A–D Converter) for +100 digits.

15) Apply S/C input. Check reading is .00000, bouncing polarity. If not, repeat steps 8–14.

16) Apply +1.00000V, adjust R76 ('+1V' on the A–D Converter) for +1.00000 ± 1 digit.

17) Apply –1.00000V, adjust R78 ('–1V' on the A–D Converter) for –1.00000 ± 1 digit.

18) Apply +1.90000V. Check reading is +1.90000 ± 5 digits.

19) Apply –1.90000V. Check reading is –1.90000 ± 5 digits.

20) Apply short circuit input and repeat step 9.

21) Apply +100.000mV. adjust R65 for +100.000 ± 2 digits.

22) Apply –100.000mV, check instrument reads –(reading obtained in step 21) ± 4 digits.

NOTE. If changing polarity involves reversing leads, check zero again as thermal e.m.f.'s may have changed. If possible, reverse polarity at a higher potential i.e. through an attenuator, so as not to change thermals.

23) Select 10, DCV. Apply +10.0000V, adjust R13 for +10.0000 ± 1 digit.

24) Apply –10.0000V, check reading is –10.0000 ± 3 digits.

25) Select 100, DCV. Apply +100.000V, adjust R9 for +100.000 ± 1 digit.

26) Apply –100.000V, check reading is –100.000 ± 3 digits.

27) Select 1000, DCV. Apply +500.00V, adjust R5 for +500.00 ± 1 digit.

28) Apply +1000.00V, check reading is +1000.00 ± 10 digits.

NOTE: When applying 1000V:

i) Check the DC Calibrator (2.2.2.1) does not exhibit excessive overshoot (i.e. <10%) when the 1000V range is selected. If in doubt, or if overshoot is excessive, increase output from calibrator gradually in 100V steps. Transients exceeding the maximum working voltage of the instrument may cause internal damage.

ii) Switch to zero before applying the opposite polarity since a 2000V edge (i.e. from +1000V to –1000V) may damage the instrument.

iii) Take care to ensure that 1000V does not appear between input 'Lo' and earth, if in any doubt apply 500V.

29) Apply –1000.00V, check the reading is –1000.00 ± 10 digits.

2.3.4.3 DC Isolator – Zero Drift Compensation

This procedure should be carried out following replacement of M.9. Covers and guard shields need not be fitted throughout the procedure. Equipment required is a temperature controlled oven and thermometer as specified in Section 2.3.2.1.

1) Select 100mV DC. Set the 'μV' offset potentiometer, R54 on the front panel of the instrument to the centre of its span. Remove F.S.V's R50 and R51, R42 and R43. Connect the DC Voltmeter to T.P.2 w.r.t. T.P.15. Short together the pins marked 'GND I/P' on the analogue board. Adjust R68 for the same voltage indication on the DC Voltmeter as on the instruments own display ± 50μV.

2) Zero instruments display with F.S.V. resistors R42 and R43 ± 20 digits. Do not solder in these resistors. Use metal film resistors (50ppm/°C) for values below 1MΩ.

3) Adjust R68 for same voltage indication on the DC Voltmeter as on the instruments display ± 20μV.

4) Repeat steps 2 and 3 if the instruments displayed zero is greater than 20 digits. Remove the DC Voltmeter from T.P.2.

5) Complete the pre-calibration procedure given in Section 2.3.4.2, paragraphs 6 to 19 to ensure that the d.c. isolator functions correctly.

6) Select 100mV DC. Apply a short circuit input to the instrument and zero the display using the 'μV' offset control, R54. Note the ambient temperature with the Thermometer.

7) Place the instrument in the Temperature Controlled Oven at approximately 50°C with power 'on'.

8) Leave the instrument in the Oven for at least one hour then note the reading on the display and the temperature of the oven. (Take care not to create draughts when opening the oven door, an oven with glass inner door is ideal if available.)

9) Compute:

a) the drift of the instrument in μV.

i.e. Drift = ± Displayed offset in Oven (Step 8) ± Displayed offset at ambient (step 6).

b) The temperature rise of the instrument in °C.

i.e. Temperature rise = Oven temperature (step 8) – Ambient temperature (step 6)

c) The offset drift per degree of temperature rise.

i.e. Drift/°C = ± Drift/Temp. rise = step 9(a)/step 9(b).

The maximum drift should be less than 0.4μV/°C.

10) If the drift is greater than 0.4μV/°C the following procedure is repeated until the drift is within the required specification. If the drift is within 0.4μV/°C. Complete steps 19 and 20.

11) Remove the instrument from the Oven and allow to stabilize, with power 'on' to ambient for one hour.

12) Compensation is achieved by adjusting R42 and R43 to produce an offset in the opposite direction to the drift obtained in step 9(c). The magnitude of the offset is $\frac{\Delta Vt}{6.6}$ mV where ΔVt is the calculated drift in μV/°C.

e.g. If the drift is measured as +100μV in a temperature rise of 30°C, then the drift/°C is +100μV/30°C = +3.3μV/°C. Hence the compensation required is:

$$\frac{\Delta Vt}{6.6.} \text{ mV} = \frac{3.3}{6.6} \text{ mV} = 500\mu\text{V}$$

Since the drift was positive this would require negative compensation i.e. –500μV. Hence, if the temperature rise is approximately 30°C, then the magnitude of the offset should be about 5 times the magnitude of this drift. The 5:1 factor should be reduced if it over compensates.

Do not solder in position R42 or R43.

13) Connect the DC Voltmeter to T.P.2 w.r.t. T.P.15 and adjust R68 for an indication of zero ± 20μV on the d.c. voltmeter.

14) In general after step 12 there will be a fixed offset which must be zeroed without affecting the temperature compensation. This is achieved by selecting a link between R50 and +BS or –BS (at T.P.3 and T.P.5 respectively) and selecting R50 and R51 to reduce the offset to zero ± 20 digits with R54 adjusted to the centre of its span. Do not solder R50 or R51 into position.

15) Adjust R54, 'μV' offset, for zero indication on the instruments display.

16) Select 10, DCV and zero the instruments display by adjustment of R38 'pA' offset.

17) Repeat steps 15 and 16 until the display reads zero without further adjustment.

18) Repeat the above procedure from step 6 until the drift obtained in step 9(c) is less than 0.4μV/°C.

19) Select 100mV DC and check R54, 'μV' offset has at least 0 ± 50 digits of span. If necessary repeat step 14.

20) Solder in all F.S.V. resistors and refit the environmental shild over M.9.

2.3.4.4 Resistance

Equipment required is as specified in Section 2.2.2.3.

1) Apply S/C to resistance input terminals. Select 1,kΩ and adjust R45 for .00000 ± 3 digits.

Note: If long leads to the precision resistors are to be used their resistance must be accounted for either by nulling out their lead resistance i.e. by applying them as the S/C in step 1 or, by calibrating the instrument high by the amount of measured lead resistance.

2) Select 10, kΩ. Check reading is zero ± 1 digit.

3) Select 100, kΩ. Check reading is zero ± 1 digit.

4) Select 1000, kΩ. Check reading is zero ± 1 digit.

5) Select 10MΩ. Check reading is zero ± 1 digit.

6) Apply 10kΩ to resistance input terminals. Select 10, kΩ. Set R72 to the centre of its span and select R73 F.S.V. for 10.0000 ± 50 digits. Use a metal film resistor (<50ppm/°C) for R73.

7) Adjust R72 for a reading of 10.0000 ± 1 digit.

8) Select 1, kΩ. Apply 1kΩ, adjust R15 for 1.00000 ± 2 digits.

9) Select 100, kΩ. Apply 100kΩ, adjust R11 for 100.000 ± 2 digits.

10) Apply 10kΩ, check reading is 10.000 ± 1 digit.

11) Apply 1kΩ, check reading is 1.000 ± 1 digit.

12) Select 1000, kΩ. Apply 1MΩ, adjust R7 for 1000.00 ± 5 digits.

13) Select 10MΩ. Apply 1MΩ, adjust R84 for 1.0000 ± 5 digits.

14) Apply 10MΩ, check reading is 10.0000 ± 200 digits.

2.3.4.5 AC Voltage

DC checks:–

Equipment required is as specified in Section 2.2.2.1, 2.2.2.4, 2.2.2.5 and a High Crest Factor Signal as specified in Section 2.3.2.1.

1) Select 1, DCI + ACI. Connect the DC Voltmeter to T.P.6 w.r.t. T.P.15. Set R105 to the centre of its span, select R107 and R108 for an indication on the DC Voltmeter of zero ±500μV.

2) Adjust R105 for an indication of zero ± 50μV on the DC Voltmeter.

3) (a) Select 1, ACV. Check the output at T.P.6 on the DC Voltmeter is zero ± 150μV.
   (b) Select 1, DCV + ACV. Check the output at T.P.6 on the DC Voltmeter is zero ± 150μV.

4) Apply short circuit input. Connect the Oscilloscope (set to 100mV/division) to T.P.8 w.r.t. T.P.15 and adjust R119 for an indication of zero.

NOTE – Due to the high gain of this non-linear circuit at zero the output will appear very 'noisy' as zero is approached. The best zero is obtained when this noise is symmetrical about zero.

5) Connect the DC Voltmeter to T.P.9 w.r.t. T.P.15. Adjust R131 to obtain a positive reading which should be approximately +0.3V. (If necessary use F.S.V. resistors R130 and R133 selected so that the d.c. voltmeter just reads positive (+0.3V) with R131 set at the centre of its span.

6) Connect the DC Voltmeter to T.P.11 w.r.t. T.P.15. Adjust R147 for an indication of –1mV ± 0.1mV.

7) Connect the Oscilloscope (set to 100mV/division) to T.P.12 w.r.t. T.P.15. Adjust R150 for 'noisy' zero.

8) Adjust R147 for an indication on the instruments display of zero ± 3 digits.

9) Apply +10mV. Adjust R131 for .00990 ± 5 digits.

10) Repeat step 4.

11) Set R126, R138 and R157 to the centre of their spans.

(a) Apply +1V and note the reading on the display.

(b) Apply –1V and select F.S.V. R124 for the same reading obtained in 11(a) ± 800 digits. Adjust R126 to obtain the same reading ± 10 digits.

12) Apply +1V. Select F.S.V. R155 for an indication of 1.00000 ± 400 digits. Adjust R157 for 1.00000 ± 10 digits.

13) Apply the High Crest Factor signal of 1V r.m.s. (2.3.2.1). Adjust R138 for 1.00000 ± 10 digits.

14) Repeat, in sequence given, steps 12, 13, 4, 9, 4, 11, 12 and 13 until all readings are correct without any further adjustment.

15) Apply +1.9V. Select F.S.V. R143 for 1.90000 ± 50 digits.

16) Repeat steps 12 and 15 until the readings are correct without further adjustment.

17) Repeat steps 4, 9, 11, 12, 13 and 15, until all readings are correct without further adjustment.

18) Apply –1.9V. Check the reading is 1.90000 ± 100 digits.

19) Select 10, DCV + ACV. Apply +10V, check the reading is 10.0000 ± 50 digits.

AC Checks:–

Equipment as specified in Section 2.2.2.2.

20) Select 1, ACV. Apply 1V r.m.s., 300Hz. Adjust R157 for 1.00000 ± 10 digits.

21) Apply 1V r.m.s., 30kHz. Adjust C40 for 1.00000 ± 10 digits.

22) Apply 1V r.m.s. at the following frequencies and check the response:–

3kHz,	1.00000 ± 50 digits
300Hz;	1.00000 ± 20 digits
40Hz;	1.00000 ± 50 digits

CAUTION: High voltages may appear on the input attenuator trimmers C2, C4 and C7. Only an adjusting tool which has a totally insulated body (to higher than the maximum output voltage capability of the A.C. Calibrator, 2.2.2.2) should be used. DO NOT use an insulated handle screw driver.

23) Select 1000, ACV. Apply 100V r.m.s. 3kHz, adjust C7 for 100.00 ± 10 digits.

24) Select 100, ACV. Apply 100V r.m.s. 3kHz, adjust C4 for 100.000 ± 10 digits.

25) Select 10, ACV. Apply 10V r.m.s. 3kHz, adjust C2 for 10.0000 ± 10 digits.

26) Repeat steps 23, 24 and 25 until the specified reading is obtained at each step, without further adjustment.

27) Select 100, ACV. Apply 100V r.m.s. and check the frequency response, at the following frequencies:–

30kHz	±	200 digits
3kHz	±	100 digits
300Hz	±	100 digits
40Hz	±	100 digits

If necessary, readjust C4 to achieve best average accuracy over the frequency range.

28) Select 10, ACV. Apply 10V r.m.s. and check the frequency response as in step 27.

If necessary, readjust C2 to achieve best average accuracy over the frequency range.

NOTE: If the frequency response is correct on the 10V and 100V range it is unlikely that the 1000V range will have a response problem. Application of voltages above 100V with no guard shields fitted may cause the current protection trip to operate.

2.3.5 Current Converter Board – Assembly Drawing No. 400113

Adjustments and calibration are to the Current Converter board unless otherwise stated.

2.3.5.1 DC Current

Equipment required is as specified in Section 2.2.2.7.

NOTE:– A common gain adjustment, R60 is provided in the d.c. isolator which should not normally require adjustment. If, however, the x2 feedback netwerk in the d.c. isolator has been disturbed it may be found that the four range adjustments on the Current Board are at the extent of their travel and the ranges cannot be calibrated. In this instance R60 should be adjusted so that all range adjustments are brought back to approximately the centre of their spans and the calibration procedure repeated.

1) Select 10,ACI. Apply 10mA r.m.s. 300Hz. Adjust R115 (Analogue Board) for an indication on the display of 10.0000 ± 20 digits.
2) Apply –1mA. Check the reading is –1.00000 ± 5 digits.
3) Select 10, DCI. Apply +10mA. Adjust R12 (Current Board) for +10.0000 ± 2 digits.
4) Apply –10mA. Check the reading is –10.0000 ± 5 digits.
5) Select 100, DCI. Apply +100mA. Adjust R9 (Current Board) for 100.000 ± 2 digits.
6) Apply –100mA. Check the reading is –100.000 ± 5 digits.
7) Select 1000, DCI. Apply +1000mA. Adjust R6 (Current Board) for 1000.00 ± 5 digits.
8) Apply –1000mA. Check the reading is –1000mA ± 10 digits.
9) Select 1, DCI. Increase the input current to the instrument and check that the protection relay 'drops out' and display blanks when the input current is > 2.5mA and < 3mA. Immediately the display blanks remove the overload, check the protection relay 'pulls in' and the display is no longer blanked after a period > 8 seconds and < 15 seconds.

2.3.5.2 AC Current

Equipment required is as specified in Section 2.2.2.7.

1) Select 10, ACI. Apply 10mA r.m.s. 300Hz. Adjust R115 (Analogue Board) for an indication on the display of 10.0000 ± 20 digits.
2) Apply 10mA r.m.s. at the following frequencies and check the response:–

30kHz	±	200 digits
3kHz	±	100 digits
300Hz	±	100 digits
40Hz	±	100 digits

3) Select 1, ACI. Apply 1mA r.m.s. at the frequencies given in step 2 and check the response.
4) Select 100, ACI. Apply 100mA r.m.s. at the frequencies given in Step 2 (up to 3kHz) and check the response.
5) Select 1000, ACI. Apply 1000mA r.m.s. at the frequencies given in step 2 (up to 3kHz) and check the response.
6) Select 1, ACI. Increase the input current (at 100Hz) to the instrument and check that the protection relay 'drops out' and the display blanks when the input current is > 2.4mA r.m.s. (sine) and < 3.6mA r.m.s.

2.3.6 External Reference Board (Option R04) – Assembly Drawing No. 400091

Adjustments and calibration are to the External Reference Board unless otherwise stated.

Equipment required is as specified in Section 2.2.2.1, 2.2.2.4 and a heat source as specified in Section 2.3.2.1.

1) Ensure that the d.c. signal measurement section is working correctly on the 1V d.c. range.

2) Switch the rear panel slide switch to 'EXT. REF'. Check rèlay k1 is energised.

3) Short circuit together 'Input Hi', 'Input Lo' and 'Signal Lo' on the external reference rear input socket.

4) Set R10, R13, R24, R14 and R19 to the centre of their spans.

5) Connect the DC Voltmeter (2.2.2.4) to T.P.3 w.r.t. 'Signal Lo'. Check the voltage is less than 30mV.

6) Connect the DC Calibrator (2.2.2.1) to 'Input Hi' w.r.t. 'Input Lo' ('Input Lo' connected to 'Signal Lo'). Apply +1V. Check the voltage at T.P.3 w.r.t. 'Signal Lo' is –5V ± 50mV.

7) Apply –1V. Check the voltage at T.P.3 w.r.t. 'Signal Lo' is +5V ± 50mV. Remove the DC Calibrator.

8) Short circuit together 'Input Hi', 'Input Lo' and 'Signal Lo'.

9) Where M3 has been replaced: Connect the DC Voltmeter to T.P.3 w.r.t. 'Signal Lo'.

   (a) Note the reading on the DC Voltmeter

   (b) Heat M3 with the Temperature Controlled Heat Source until the reading on the DC Voltmeter has stabilized. Note the reading.

   (c) If the observed change at T.P.3 i.e. reading in (b) – reading in (a) is greater than 200μV, allow M3 to return to ambient temperature i.e. when the reading on the DC Voltmeter has again stabilized. Inject an offset using R25 or R26 in the same direction as the drift of approximately five times the magnitude. Use metal film (< 50ppm/°C) resistors for values below 1MΩ.

   (d) Repeat steps 9(a), (b) and (c) until the observed drift is less than 200μV.

10) When M1 has been replaced: Connect the DC Voltmeter to T.P.1 w.r.t. 'Signal Lo'.

   (a) Use F.S.V. resistors R8 and R9 to bring the voltage at T.P.1 to less than ± 100μV. Note the reading on the DC Voltmeter.

   (b) Heat M1 with the Temperature Controlled Heat Source until the reading on the DC Voltmeter has stabilized. Note the reading.

   (c) If the observed change at T.P.1 i.e. reading in (b) – reading in (a) is greater than 40μV allow M1 to to return to ambient temperature i.e. when the reading on the DC Voltmeter has stabilized. Inject an offset using R10 in the opposite direction to the drift and of approximately five times the magnitude.

   (d) Repeat steps 10(a), (b) and (c) until the observed voltage drift is less than ± 40μV.

   (e) Allow M1 to return to ambient temperature i.e. when the reading has stabilized on the DC Voltmeter. Connect the DC Voltmeter to T.P.3 w.r.t. 'Signal Lo'. Note the offset at T.P.3. Centralize R10 and select F.S.V. resistors R8 and R9 to produce the same offset at T.P.3 ± 200μV. [Use metal film (< 50ppm/°C) resistors for values below 1MΩ]

11) When M2 has been replaced: Connect the DC Voltmeter to T.P.2 w.r.t. 'Signal Lo'.

   (a) Use F.S.V. resistors R11 and R12 to bring the voltage at T.P.2 to less than ± 100μV. Note the reading on the DC Voltmeter.

   (b) Heat M2 with the Temperature Controlled Heat Source until the reading on the DC voltmeter has stabilized. Note the reading.

   (c) If the observed change at T.P.2 i.e. reading in (b) – reading in (a) is greater than 40μV allow M2 to return to ambient temperature i.e. when the reading on the DC Voltmeter has stabilized. Inject an offset using R13 in the opposite direction to the drift and approximately five times the magnitude.

   (d) Repeat steps 11(a), (b) and (c) until the observed drift is less than ± 40μV.

(e) Allow M2 to return to ambient temperature i.e. when the reading has stabilized on the DC Voltmeter. Connect the DC Voltmeter to T.P.3 w.r.t. 'Signal Lo'. Note the offset at T.P.3. Centralize R13 and select F.S.V. resistors R11 and R12 to produce the same offset at T.P.3 ± 200μV. Use metal film (< 50ppm/°C) resistors for values below 1MΩ. Adjust R13 to reproduce the offset at T.P.3 ± 20μV and seal R13.

12) Select F.S.V. R17 (from either +15V or –15V supply – see Layout Drawing) for and indication on the DC Voltmeter of zero ± 200μV at T.P.3. Use metal film resistors (< 50ppm/°C) for values below 100kΩ.

13) Switch off the instrument and solder in position all F.S.V. resistors. Switch on.

14) Connect the DC Calibrator (2.2.2.1) to 'Input Hi' w.r.t. 'Input Lo' ('Input Lo' connected to 'Signal Lo'). Apply +1V. Connect the DC Voltmeter to T.P.3 w.r.t. 'Signal Lo'. Check:

(a) Rotation of R14 produces a span of greater than 4mV.

(b) Rotation of R24 produces a span of greater than 4mV.

15) Apply –1V. Check rotation of R19 produces a span of greater than 4mV on the DC Voltmeter.

DESIGNATOR	DATRON PART No.	DESCRIPTION	PRINCIPAL MANUFACTURER	MANUFACTURER'S PART No.	No. USED Per Assy.
R1.	000 102	1K 5% ¼W CARBON	MULLARD	CR25	8
R2	000 272	2K7 " " "	"	"	3
R3	063 203	20K POT. CERMET	BECKMAN	72P	1
R4, R5	000 221	220R 5% ¼W CARBON	MULLARD	CR25	3
R6	070 074	36K07 ·1%	MANN	MX125B	1
R7	070 075	9K1 ·1%	"	MX125B	2
R8, R10-R17	000 103	10K 5% ¼W CARBON	MULLARD	CR25	17
R18	011 004	1M 1% ⅛W MF.	WELWYN	4033C	1
R19	000185	1M8 5% ¼W CARBON	MULLARD	CR25	1
R20-R23	000 105	1M " " "	"	"	8
R26-R30	000 104	100K " " "	"	"	15
R25, R9	000 102	1K " " "	"	"	—
R31	000 103	10K " " "	"	"	—
R32, R34, R35	000 106	10M 10% ¼W CARBON	"	"	3
R24	000 153	15K 5% ¼W CARBON	"	"	1
R36	011 002	10K 1% ⅛W MF.	WELWYN	4033C	2
R37	011 302	13K " " "	"	"	1
R39		F.S.V. PART OF KIT 219005	WELWYN	4033C	1
R40	000 822	8K2 5% ¼W CARBON	MULLARD	CR25	1
R41	000 682	6K8 " " "	"	"	4
R42	000 472	4K7 " " "	"	"	4
R43		F.S.V. 10% ¼W CARBON (≙2M7)	ALLEN BRADLEY	CB1561	1
R44	000 220	22R 5% ¼W CARBON	MULLARD	CR25	1

NOTES.

ISS.	10	11	12	13	14	15	16	17	18	19	20
ECO.	192	194	202	211	225	230	289	247	413	449	467
DATE.	30.3.76.	9.4.76	9.4.76	28.6.76	27.8.76	27-8-76	13-9-76	17-11-76	31-3-77	25-4-77	26-5-77

ISS. 1	ISS. 2	3	4	5	6	7	8	9
/	ECO.108	ECO.114	E.C.O.121	E.C.O.130	ECO.138	ECO 142	ECO.147	172
12/9/75	26/9/75	3/10/75	23/10/75	18/12/75	8/1/76	28/1/76	3/2/76	24.2.76

DATE 15/8/75

DRAWN BY IV

CHECK

NEXT DRAWING

PROD L.A.D. 2.2.77

datron ELECTRONICS LTD

TITLE 1059 A-D

DRAWING NUMBER 400105

SHEET 2 OF 14

J. W. 1164

DESIGNATOR	DATRON PART No.	DESCRIPTION	PRINCIPAL MANUFACTURER	MANUFACTURER'S PART No.	No. USED Per Assy.
R45	000 226	22M 10% ¼W CARBON	ALLEN BRADLEY	CB 10	1
R46	063 101	100R POT. CERMET	BECKMAN	72P	1
R47	000 221	220R 5% ¼W CARBON	MULLARD	CR25	–
R48		NOT USED			
R49		NOT USED			
R50	000 102	1K 5% ¼W CARBON	MULLARD	CR25	—
R51	000 472	4K7 " " "	"	"	—
R52	000 222	2K2 " " "	"	"	1
R53	000 224	220K " " "	"	"	1
R54-R55	000 103	10K " " "	"	"	—
R56		NOT USED			
R57	000 472	4K7 5% ¼W CARBON	MULLARD	CR25	—
R58-R60	000 101	100R " " "	"	"	7
R61	000 473	47K " " "	"	"	3
R62	000 184	180K " " "	"	"	1
R63	011 002	10K 1% ⅛W MF.	WELWYN	4033C	–
R64	013 902	39K " " "	"	"	1
R65	01 7870	787R " " "	"	"	1
R66	070 075	9k1 ·1%	MANN	MX125B	–
R67	070073	6k55 ·1%	"	"	1
R68, R69	070066	10k ·1% "	"	"	2
R70		F.S.V. 1% ⅛W MF	WELWYN	4033C	1
R71		F.S.V.			1

NOTES.

SEE SHEET 2 FOR LATEST ISSUE

ISS. 1								
12/9/75								

DATE 15/8/75

DRAWN BY TV.

CHECK

NEXT DRAWING ISS 1

datron ELECTRONICS LTD

TITLE 1059 A-D

DRAWING NUMBER 400105

SHEET 3 OF 14

DESIGNATOR	DATRON PART No.	DESCRIPTION	PRINCIPAL MANUFACTURER	MANUFACTURER'S PART No.	No. USED Per Assy.
R72	000 272	2K7 5% ¼W CARBON	MULLARD	CR25	–
R73	000 155	1M5 10% ¼W CARBON	"	"	1
R74, R75	000 682	6K8 5% ¼W CARBON	"	"	–
R76	063 200	20R POT CERMET	BECKMANN	72 P	2
R77	000 101	100R 5% ¼W CARBON	MULLARD	CR25	–
R78	063 200	20R POT. CERMET	BECKMANN	72 P	–
R79	063 205	2M " "	"	"	2
R80, R81	063 504	500K " "	"	"	2
R82	063 205	2M " "	"	"	–
R83	000 563	56K 5% ¼W CARBON	MULLARD	CR25	2
R84	000 104	100K " " "	"	"	–
R85	000 102	1K " " "	"	"	–
R86, R87	000 105	1M " " "	"	"	–
R88	000 107	100M 10% ¼W CARBON	ALLEN BRADLEY	CB 1071	2
R89		F.S.V. 10% ¼W CARBON (1M)	MULLARD	CR25	1
R90-R92	000 101	100R " " "	"	"	–
R93	000 182	1K8 " " "	"	"	2
R94		F.S.V. 10% ¼W CARBON (15M)			1
R95	000 223	22K 5% ¼W CARBON	MULLARD	CR25	5
R96	000107	100M 10% ¼W CARBON	ALLEN BRADLEY	CB1071	–

NOTES.

SEE SHEET 2 FOR LATEST ISSUE

ISS. 1								
12/9/75								

DATE 15/8/75

DRAWN BY IV.

CHECK

NEXT DRAWING

ISS. 1

datron ELECTRONICS LTD

TITLE 1059 A-D

DRAWING NUMBER 400105

SHEET 4 OF 14

J. W. 1164

DESIGNATOR	DATRON PART No.	DESCRIPTION	PRINCIPAL MANUFACTURER	MANUFACTURER'S PART No.	No. USED Per Assy.
R100		NOT USED			
R101		NOT USED			
R102		NOT USED			
R103	000 151	150R 5% ¼W CARBON	MULLARD	CR25	1
R104, R105, R38	000 562	5K6 " " "	"	"	3
R106	000 331	330R " " "	"	"	1
R107	000 390	39R " " "	"	"	1
R108	000 105	1M " " "	"	"	—
R109	000 102	1K " " "	"	"	—
R110	000 103	10K " " "	"	"	—
R111	000 102	1K " " "	"	"	—
R112	063 102	1K POT. CERMET	BECKMANN	72P	1
R113, R114	019101	9K1 1% ⅛W M/F	WELWYN	4033C	2
R115, R116		NOT USED			
R117	000 102	1K 5% ¼W CARBON	MULLARD	CR25	—
R118		NOT USED			
R119		NOT USED			
R120 - R123		NOT USED			
R124		NOT USED			
R125		NOT USED			
R126		NOT USED			
R33	000 395	3M9 10% ¼W CARBON	MULLARD	CR25	1

NOTES.

SEE SHEET 2 FOR LATEST ISSUE

ISS. 1								
15/8/75								

DATE 15/8/75
DRAWN BY IV
CHECK
NEXT DRAWING
ISS 1

datron ELECTRONICS LTD

TITLE 1059 A-D

DRAWING NUMBER 400105

SHEET 5 OF 14

J. W. 1164

DESIGNATOR	DATRON PART No.	DESCRIPTION	PRINCIPAL MANUFACTURER	MANUFACTURER'S PART No.	No. USED Per Assy.
R127	000 104	100K 5% ¼W CARBON	MULLARD	CR25	—
R128	000 332	3K3 " " "	"	"	2
R129 - R130	000 104	100K " " "	"	"	—
R131	000 104	100K " " "	"	"	—
R132	000 473	47K 5% ¼W CARBON	MULLARD	CR25	—
R133	000 563	56K " " "	"	"	—
R134	000 104	100K " " "	"	"	—
R135	000 823	82K " " "	"	"	1
R136, R137	000 103	10K " " "	"	"	—
R138	000 223	22K " " "	"	"	—
R139	000 123	12K " " "	"	"	1
R140	000 104	100K " " "	"	"	—
R141, R142	000 223	22K " " "	"	"	—
R143, R144	000 104	100K " " "	"	"	—
R145	000 333	33K " " "	"	"	2
R146	000 393	39K " " "	"	"	1
R147	000 333	33K " " "	"	"	—
R148	000 104	100K " " "	"	"	—
R149	000 182	1K8 " " "	"	"	—
R150	000 103	10K " " "	"	"	—
R151	000 683	68K " " "	"	"	1
R152	000 472	4K7 " " "	"	"	—

NOTES.

SEE SHEET 2 FOR LATEST ISSUE

ISS. 1								
12/9/75								

DATE 15/8/75

DRAWN BY IV

CHECK

NEXT DRAWING ISS. 1

datron ELECTRONICS LTD

TITLE 1059 A-D

DRAWING NUMBER 400105

SHEET 6 OF 14

J. W. 1164

DESIGNATOR	DATRON PART No.	DESCRIPTION	PRINCIPAL MANUFACTURER	MANUFACTURER'S PART No.	No. USED Per Assy.
R153	000 682	6K8 5% ¼W CARBON	MULLARD	CR25	—
R154	000 332	3K3 " " "	"	"	—
R155	000 223	22K " " "	"	"	—
R156	000 272	2K7 " " "	"	"	—
R157	000 473	47K " " "	"	"	—
R158, R159		NOT USED			
R160		NOT USED			
R161		NOT USED			
R162		NOT USED			
R163	000 103	10K 5% ¼W CARBON	MULLARD	CR25	—
R164	000 105	1M " " "	"	"	—
T1 - T3	310 001	PULSE TX	NEWPORT INSTR.	76616/4	3
T4	300 007	TOROIDAL MAINS TX.			1
T5	300006	STEP-UP Tx 5-0-5 TO 90 POT CORE	NEWPORT INSTR	B79399	1
L1	370 001	RF CHOKE 10μH	PLESSEY	58/10/0011/10	1
W1	209 003	BRIDGE RECTIFIER 100V 1·5A	G.I.	WS01	1
W2, W3	209 004	" " 100V 1A	G.I.	W01	2
W4	209 007	" " 400V 1A	G.I.	W04	1

NOTES.

SEE SHEET 2 FOR LATEST ISSUE

ISS. 1								
15/8/75								

DATE 15/8/75

DRAWN BY IV

CHECK

NEXT DRAWING

ISS 1

datron ELECTRONICS LTD

TITLE 1059 A-D

DRAWING NUMBER 400105

SHEET 7 OF 14

DESIGNATOR	DATRON PART No.	DESCRIPTION	PRINCIPAL MANUFACTURER	MANUFACTURER'S PART No.	No. USED Per Assy.
C1, C2	180 020	1000µf. 25v. Al. ELECT.	WIMA	PRINTILYT 3	5
C3-C9	150 001	22µf. 16v. TANT.	UNION CARBIDE	K22 E16	11
C10-C14	101 103	·01µf. 250v. CER DISC	ERIE	801	11
C15	150008	·47µf. 35v. TANT.	UNION CARBIDE	KR47E35	1
C16	101 103	·01 µf. 250v. CER DISC.	ERIE	801	—
C17	110 017	22nf. 250v. POLYESTER	MULLARD	C280AE/P22K	1
C18	101 103	·01µf. 250v. CER. DISC	ERIE	801	—
C19	102 102	1nf. 500v. CER. DISC	ERIE	801	6
C20	102 100	10pf. 500v. CER. DISC.	ERIE	801	3
C21-C23	102 330	33pf. 500v. CER. DISC.	ERIE	801	3
C24	102 100	10 pf. 500v CER. DISC	ERIE	801	-
C25	102 102	1nf. 500v. CER. DISC	ERIE	801	—
C26		NOT USED			
C27	150 001	22µf. 16v. TANT.	UNION CARBIDE	K22 E16	—
C28	110 012	150pf. 400v. POLYESTER	WIMA	TROPYFOL F	3
C29	110 002	·15µf. 250v. POLYESTER	MULLARD	C280AE/P150K	1
C30	140 002	·47µf. 10% POLYPROP.	WIMA	MKP10	1
C31	102 102	1nf 500v CER. DISC	ERIE	801	—
C32	110 008	·68µf. 100v. POLYESTER	WIMA	MKS	1
C33-C35	102 101	100pf. 500v. CER. DISC	ERIE	801	3
C36		NOT USED			
C37	150 001	22µf. 16v. TANT	UNION CARBIDE	K22 E16	—
C38	102 102	1nf. 500v. CER. DISC	ERIE	801	—

NOTES.

SEE SHEET 2 FOR LATEST ISSUE

ISS.								
12/9/75								

DATE 15/8/75

DRAWN BY IV

CHECK

NEXT DRAWING

ISS. 1

datron ELECTRONICS LTD

TITLE 1059 A-D

DRAWING NUMBER 400105

SHEET 8 OF 14

J. W. 1164

DESIGNATOR	DATRON PART No.	DESCRIPTION	PRINCIPAL MANUFACTURER	MANUFACTURER'S PART No.	No. USED Per Assy.
C100, C101	180 020	1000µf. 25v. Al. ELECT	WIMA	PRINTILYT 3	—
C102	101 103	·01µf. 250v. CER. DISC	ERIE	801	—
C103	150 003	47µf. 6V3 TANT	UNION CARBIDE	K47E6	2
C104, C105	110 026	6800pf. 100v. POLYESTER	WIMA	FKS2	2
C106	150 001	22µf. 16v. TANT.	UNION CARBIDE	K22 E16	—
C107	180 020	1000µf. 25v. Al. ELECT.	WIMA	PRINTILYT 3	—
C108	180 019	10µf. 250v. Al. ELECT.	ERIE	21101-100	1
C109, C110	110 012	150pf. 400v. TROPYFOL F	WIMA	TROPYFOL F	—
C111		NOT USED			
C112		NOT USED			
C113	150 001	22µf. 16v. TANT.	UNION CARBIDE	K22 E16	—
C114		NOT USED			
C115, C116		NOT USED			
C117		NOT USED			
C118	150 007	6·8µf. 16v. TANT.	UNION CARBIDE	K6R8 E16	1
C119, C120, C124	101 103	·01µf. 250v. CER. DISC	ERIE	801	—
C121	150 012	0·1µf. 35v. TANT.	UNION CARBIDE	KRIE35	1
C122	102 221	220pf. 500v. CER. DISC	ERIE	801	1
C123	110 005	·01µf. 250v. POLYESTER	MULLARD	C280AE/P10K	2
C126	102471	470pf 500v. CER. DISC	ERIE	801	1
C127	110 005	·01 µf. 250v. POLYESTER	MULLARD	C280 AE/P10K	—
C128	102 100	10pf. 500v. CER. DISC	ERIE	801	—
C129, C125	102 102	1nf. 500v. CER. DISC.	ERIE	801	—

NOTES.

SEE SHEET 2 FOR LATEST ISSUE

ISS.									
1									
/9/									

DATE 15/8/75

DRAWN BY IV

CHECK

NEXT DRAWING

ISS 1

datron ELECTRONICS LTD

TITLE 1059 A-D

DRAWING NUMBER 400105

SHEET 9 OF 14

J. W. 1164

DESIGNATOR	DATRON PART No.	DESCRIPTION	PRINCIPAL MANUFACTURER	MANUFACTURER'S PART No.	No. USED Per Assy.
C130, C134	150 005	2·2µf. 16v. TANT.	UNION CARBIDE	K2R2 E16	2
C131		NOT USED			
C132	150 003	47µf. 6V3 TANT.	UNION CARBIDE	K47E6	—
C133	110 013	·1µf. 250V POLYESTER	MULLARD	C280 AE/P100K	2
C135	110 013	·1µf. " "	"	"	—
D1, D2, D4, D6-D10	200 008	DIODE LOW LEAKAGE	FAIRCHILD	IN458A	9
D11, D12, D13	200 001	DIODE, Si, G.P.		IN4148	23
D14	200 008	DIODE LOW LEAKAGE		IN458A	—
D15-D19	200 001	DIODE, Si G.P.		IN4148	—
D20, D21	210 100	DIODE ZENER 10V. 400mW	MULLARD	BZY88-C10	2
D22-D24	210 056	DIODE " 5V6 "	"	BZY88-C5V6	3
D25	210 240	DIODE " 24V. "	"		1
D26	219 005	REF. DIODE +1/8W, 1%, 50ppm. M.F.	PART OF	DATRON SELECTED KIT	1
D27	200 001	DIODE, Si, G.P.	MULLARD	IN4148	—
D28, D29, D30		NOT USED			
D31-D32	200 001	DIODE, Si, G.P.	"	IN4148	—
D33	210 082	DIODE, ZENER, 8V2, 400mW	MULLARD	BZY88-C8V2	1
D34, D35		NOT USED			
D36, D38		NOT USED			
D37	200 001	DIODE, Si, G.P.	"	IN4148	—
D39	200005	DIODE, Ge, G.P.	HUGHES	HG5009	1
D40, D42-D49	200 001	DIODE, Si, G.P	"	IN4148	—
D50	210 150	DIODE, ZENER, 15V. 400mW	MULLARD	BZY88-C15	1

NOTES.

SEE SHEET 2 FOR LATEST ISSUE

ISS.								
12/9/75								

DATE 15/8/75

DRAWN BY IV

CHECK

NEXT DRAWING

datron ELECTRONICS LTD

TITLE 1059 A-D

DRAWING NUMBER 400105

SHEET 10 OF 14

J. W. 1164

DESIGNATOR	DATRON PART No.	DESCRIPTION	PRINCIPAL MANUFACTURER	MANUFACTURER'S PART No.	No. USED Per Assy.
D51- D52		NOT USED			
D53- D54	200 001	DIODE, Si, G.P.		IN4148	—
M1		NOT USED			
M2	270 024	7SEG. DECODER/DRIVER	SPERRY	DD700	1
M3	280 001	4 POLE 2WAY MULTIPLEXER	NATIONAL	MM74C157N	1
M4	290 016	DIGITAL VOLTMETER LOGIC	FAIRCHILD	3814 DC	1
M5	280 009	DIG. I.C. HEX. BUFFER	MOTOROLA	MC14049CP	5
M6	280 003	DIG. I.C. QUAD. LATCH	"	MC14042CP	1
M7	280 012	DECADE COUNTER	NATIONAL	MM74C163N	1
M8	280 007	DIG. I.C. TRIPLE NAND	MOTORALA	MC14023CP	3
M9	280 010	DECADE COUNTER	NATIONAL	MM74C160N	1
M10	280 008	DIG. I.C. QUAD NAND	MOTOROLA	MC14011CP	8
M11	280 009	DIG. I.C. HEX. BUFFER	"	MC14049CP	—
M12	280 008	DIG I.C. QUAD NAND	"	MC14011 CP	—
M13, M16	280 011	DIG. I.C. DUAL D FLIP-FLOP	"	MC14013CP	3
M14, M15	280 008	DIG. I.C. QUAD NAND	"	MC14011 CP	—
M17	280 009	DIG. I.C. HEX BUFFER	"	MC14049CP	—
M18	280 007	DIG. I.C. TRIPLE NAND	"	MC14023CP	—
M19	290 003	TIMER - ASTABLE	SIGNETICS	NE 555V	3
M20, M21	280 006	DIG. I.C. DUAL JK FLIP-FLOP	MOTOROLA	MC14027CP	3
M22, M23	280 008	DIG. I.C. QUAD NAND	"	MC14011 CP	—
M24	290 003	TIMER - MONOSTABLE	SIGNETICS	NE 555V	—
M25	270 028	DIG. I.C. QUAD NAND	NATIONAL	DM 74L03N	1
M26	280 009	DIG. I.C. HEX BUFFER	MOTOROLA	MC14049CP	—

NOTES.

SEE SHEET 2 FOR LATEST ISSUE

DATE	15/8/75
DRAWN BY	IV
CHECK	
NEXT DRAWING	
ISS. 1	
TITLE	1059 A-D
DRAWING NUMBER	400105
SHEET OF	11 / 14

datron ELECTRONICS LTD

ISS. 1

15/8/75

DESIGNATOR	DATRON PART No.	DESCRIPTION	PRINCIPAL MANUFACTURER	MANUFACTURER'S PART No.	No. USED Per Assy.
M27	290 003	TIMER - ASTABLE	SIGNETICS	NE 555V	—
M28	280 007	DIG. I.C. TRIPLE NAND	MOTOROLA	MC 14023 CP	—
M29		NOT USED			
M30		NOT USED			
M31		NOT USED			
M32		NOT USED			
M33, M34		NOT USED			
M35	260 013	LINEAR I.C. LF 356	NATIONAL	LF356	1
M36	290009	LINEAR I.C. 301 OP. AMP		LM301AH (BLK./WHITE)	2
M37	290010	" "	"	LM301AH (RED/ORANGE)	1
M38	290 020	" "	"	LM301AH (BLK./ORANGE)	1
M39	290012	" " 741	FAIRCHILD	741HC (RED/ORANGE)	1
M40	290019	LINEAR I.C. 301	NATIONAL	LM301AH (RED/WHITE)	1
M41	290009	" " "	"	LM301AH (BLK./WHITE)	—
M42	280 008	DIG. I.C. QUAD NAND	MOTOROLA	MC 14011 CP	—
M43	280 009	DIG. I.C. HEX BUFFER	"	MC 14049CP	—
M44	280 006	DIG. I.C. DUAL JK FLIP-FLOP	"	MC14027CP	—
M45	280 011	DIG. I.C. DUAL D FLIP-FLOP	"	MC14013CP	—
M46	280 008	DIG. I.C. QUAD NAND	"	MC14011 CP	—
M47, M48	260 017	LINEAR I.C. 15V. REGULATOR	"	MC 78M15	2
M49	290 004	LINEAR I.C. 312 OP. AMP.	NATIONAL	LM 312H (RED)	1
M50	260 005	LINEAR I.C. 5V REGULATOR	MOTOROLA	MC 7805	1

NOTES.

SEE SHEET 2 FOR LATEST ISSUE

ISS. 1								
12/9/75								

DATE 15/8/75

DRAWN BY IV

CHECK

NEXT DRAWING ISS. 1

datron ELECTRONICS LTD

TITLE 1059 A-D

DRAWING NUMBER 400105

SHEET 12 OF 14

J. W. 1164

DESIGNATOR	DATRON PART No.	DESCRIPTION	PRINCIPAL MANUFACTURER	MANUFACTURER'S PART No.	No. USED Per Assy.
Q1	230 019	P MOS FET ENHANCEMENT	G.I.	MEM 806	1
Q2 - Q4	230 002	N FET SWITCH G.P.	TELEDYNE	U1994E/K4416-18	3
Q6, Q7, Q8	239 018	MATCHED SET OF 3 FETS.	DATRON SEL. TELEDYNE	U1899E $\Delta R_{on} < 10\Omega$	1 SET
Q9	230 003	N FET SWITCH GP	TELEDYNE	U1899E/K4093-18	1
Q10, Q11, Q12	230 001	JUNCTION FET CURRENT LIMIT DIODE		E506	3
Q14 - Q18, Q20	240 001	SIL. N.P.N. G.P.		BC184K	10
Q21 - Q23	240 007	SIL. NPN. G.P.	FAIRCHILD	2N3646	6
Q24	250 001	SIL. P.N.P. G.P.		BC214K	1
Q25	240 001	SIL. NPN G.P.		BC184K	—
Q40, Q41	240 001	SIL. NPN G.P.		BC184K	—
Q42	240 011	SIL. NPN. MED POWER	FAIRCHILD	BC 338	1
Q43 - Q45	240 007	SIL. NPN. G.P.	"	2N3646	—
Q46 - Q54		NOT USED			—
Q55	240001	SIL. NPN. G.P.		BC184K	—
	700020	SWITCH BUTTON CHROME			3
	613 007	WASHER			1
	450039	UPPER GUARD SHIELD			1
	450040	LOWER " "			1

NOTES.

SEE SHEET 2 FOR LATEST ISSUE

ISS. 1								
18/9/72								

DATE 15/8/75	datron ELECTRONICS LTD
DRAWN BY TV	TITLE 1059 A-D
CHECK	
NEXT DRAWING ISS 1	DRAWING NUMBER 400105 SHEET 13 OF 14

J. W. 1164

DESIGNATOR	DATRON PART No.	DESCRIPTION	PRINCIPAL MANUFACTURER	MANUFACTURER'S PART No.	No. USED Per Assy.
S1, S3	700 005	SWITCH. P.C.B. PUSH ON/OFF	LIPA & ISOSTAT	CD 15 2 pole	2
S2	700 039	SWITCH P.C.B. MOMENTARY	" "	CD 15 2 pole	1
	612 005	STANDOFF M3 X 23 MM.	HARWIN		3
	613 011	6BA NYLON WASHERS	NYLONIC ENG Co. LTD.	7801	4
J3	605 002	16 WAY D.I.L. SOCKET	ANTIFERENCE	ICN-163-53	1
J7, J8	605 011	16 WAY SOCKET	AMP	H6380-5	2
	611 019	M3x35 POZIPAN			1
	620 003	PCB. SOLDER TERMINAL	HARWIN	H2105A	11
	602 001	F.S.V. TERMINAL	MOLEX	0204 1875	10
	601 002	CONNECTOR TERMINAL	AMP	60803-1	17
	459 138	TRANSISTOR HEAT DISSIPATOR	KDP ES	459138	2
	459 139	HEAT DISSIPATOR	"	459 139	1
	410019 - 8	P.C.B.			1
	618 001	TRANSISTOR MOUNTING-KIT			1
	611 006	M3 X 10MM POZI-PAN	G.K.N.		9
	613 005	M3 SHAKEPROOF			10
	615 002	M3 NUT	G.K.N.		4
	590 001	SLEEVE			11
	602 004	D.I.L. SOCKET STRIP TERMS	MOLEX	1938-4	418
	602 005	8 WAY D.I.L. BUCKET	"	2460-8	26
	602 006	7 WAY D.I.L. BUCKET	"	2460-7	30
	605 012	24 WAY D.I.L. SOCKET	JERMYN	A23-2023Y	1
	604017	MAINS CONNECTOR	MOLEX	AE 3003	1

NOTES.

SEE SHEET 2 FOR LATEST ISSUE

ISS. 1								
12/9/75								

DATE 15/8/75

DRAWN BY IV

CHECK

NEXT DRAWING

ISS. 1

datron ELECTRONICS LTD

TITLE 1059 A-D.

DRAWING NUMBER 400105

SHEET 14 OF 14

J. W. 1164

DESIGNATOR	DATRON PART No.	DESCRIPTION	PRINCIPAL MANUFACTURER	MANUFACTURER'S PART No.	No. USED Per Assy.
R1 - R6	000 222	2k2 5% ¼W CARBON	MULLARD	CR25	6
R7 - R11	000 104	100k " " "	"	"	5
R12 - R16	000 153	15k " " "	"	"	5
R17, R18	000 472	4k7 " " "	"	"	2
R19 - R24	000 224	220k " " "	"	"	6
R25 - R29	000 225	2M2 10% " "	"	"	5
C1 - C5	110 013	0·1μF 250v POLYESTER	MULLARD	C280AE/P100k	5
D1 - D7	200 001	DIODE Si. G.P.		1N4148	7
D8		NOT USED			
Q1 - Q5	250 009	P.N.P. Si. Hi. VOLT		2N5401	5
Q6 - Q10	240 009	N.P.N. Si. Hi VOLT G.P.	MOTOROLA	MPSL01	5
	630030	CREPE PAPER TAPE ·200"	BRADY	CSR200	80mm
M1	280 009	DIG. I.C. HEX. INV.	MOTOROLA	MC14049CP	1
	410018 - 3	P.C.B.			1
	602 004	D.I.L. SOCKET STRIP	MOLEX	1938-4	16
	602 005	D.I.L. 8-WAY BUCKET	"	2460-8	2
	604 003	CONNECTOR STRIP 11-WAY	AMP		3
	800 010	SPERRY SOCKET	SPERRY	CS353	2
	800 003	SPERRY ·5" DISPLAY (888)	"	SP353	1
	800012	SPERRY ·5" DISPLAY (188)	"	SP354	1

NOTES.

ISS.	1	2
		ECO 319
	12/1/76	15.11.76

DATE 19.12.75

DRAWN BY IV

CHECK

NEXT DRAWING

PROD L.A.D. 1977

datron ELECTRONICS LTD

TITLE 1059 ·5" SPERRY DIGITAL ASSY.

DRAWING NUMBER 400106

SHEET 2 OF 2

J. W. 1164

DESIGNATOR	DATRON PART No.	DESCRIPTION	PRINCIPAL MANUFACTURER	MANUFACTURER'S PART No	No. USED Per Assy.
R1	000104	100K 5% ¼W CARBON	MULLARD	CR25	6
R2	000104	100K "	"	"	—
R3	000104	100K "	"	"	—
R4	000393	39K "	"	"	1
R5	000104	100K "	"	"	—
R6	000104	100K "	"	"	—
R7	000104	100K "	"	"	—
C1	150012	0.1μF 35V 20% DIPPED TANT.	UNION CARBIDE	KR1E35	1
C2	102102	1kpF 500V CER DISC	ERIE	801	1
	601002	CONNECTOR TERMINAL	AMP	60803-1	1
M1	280014 *	TRI-STATE HEX BUFFER		80C95, COMMERCIAL	7
M2	290003	TIMER MONOSTABLE	SIGNETICS	NE555V, "	1
M3	280001	QUAD 2 I/P MULTIPLEXER		74C157, "	1
M4	280008	QUAD NAND		14011 "	2
M5	280014 *	TRI-STATE HEX BUFFER		80C95 "	—
M6	280014 *	"		" "	—
M7	280008	QUAD NAND		14011 "	—
M8	280009	HEX INVERTER		14049 "	1

NOTES.

ISS. 2	3	4	5					
ECO 122	ECO 207	234	310 16-12-76					

DATE 8/76	datron ELECTRONICS LTD
DRAWN BY RW	TITLE 1051 1059 BCD OUTPUT OPTION B04
CHECK FJH	
NEXT DRAWING	
PROD/AD. 2.2.77	DRAWING NUMBER 400095 SHEET 2 OF 3

J. W. 1164

DESIGNATOR	DATRON PART No.	DESCRIPTION	PRINCIPAL MANUFACTURER	MANUFACTURER'S PART No.	No. USED Per Assy.
M9	280015	TRI-STATE QUAD LATCH		74C173, COMMERCIAL	5
M10	280015	"		" "	—
M11	280015	"		" "	—
M12	280015	"		" "	—
M13	280015	"		" "	—
M14	280014 *	TRI-STATE HEX BUFFER		80C95 "	—
M15	280014 *	"		" "	—
M16	280014 *	"		" "	—
M17	280014 *	"		" "	—
	612006	PILLAR M3 x 9.5 MM	HARWIN		1
	410027-5	PRINTED CIRCUIT BOARD			1
	604001	50 WAY PLUG (CABLE MTG.)	AMPHENOL	57-30500	1
	605001	50 WAY AMP. SKT. (PANEL MNT)	AMPHENOL	57-40500	1
	602005	8 WAY D.I.L. SKT. BUCKET	MOLEX	2460-8	28
	602006	7 WAY D.I.L. SKT BUCKET	"	2460-7	4
	602004	D.I.L. SKT. STRIP TERMS.	"	1938-4	252
J7	604010	16 WAY AMP MALE CON.	AMP	1-163749-5	2 SETS
J8	604010	"	"	"	—

NOTES. * ALTERNATIVE 280024 TRI STATE HEX BUFFER MOTOROLA MC14503

ISS.	SEE	SHEET	2

DATE 8/76
DRAWN BY TW
CHECK
NEXT DRAWING

datron ELECTRONICS LTD

TITLE 1051 1059 BCD OUTPUT OPTION B04

DRAWING NUMBER 400095

SHEET 3 OF 3

J. W. 1164

DESIGNATOR	DATRON PART No.	DESCRIPTION	PRINCIPAL MANUFACTURER	MANUFACTURER'S PART No.	No. USED Per Assy.
R1	000107	100M 10% ¼W CARBON	ALLEN BRADLEY	CB 1071	1
R2	008006	56K THICK FILM	DUBILIER	RG07	4
R3	008006	"	"	"	—
R4	008006	"	"	"	—
R5	008006	"	"	"	—
R6	000124	120K 5% ¼W CARBON	MULLARD	CR25	2
R7	000124	120K "	"	"	—
R8		FSV			1
R9		FSV			1
R10	063205	2M 3/8" CERMET POT.	BECKMAN	72P	2
R11		FSV			1
R12		FSV			1
R13	063205	2M 3/8" CERMET POT.	BECKMAN	72P	—
R14	063100	10R "	"	"	1
R15	090014	9K995 .02% MATCHED	MANN	3C-8	2
R16		50K .02% PAIR			
R17		FSV			1
R18	000102	1K 5% ¼W CARBON	MULLARD	CR25	1
R19	063500	50R 3/8" CERMET POT	BECKMAN	72P	1
R20	090014	9K995 .02% MATCHED	MANN	3C-8	—
R21		50K .02% PAIR			
R22	000220	22R 5% ¼W CARBON	MULLARD	CR25	1
R23	000154	150K "	"	"	1

NOTES.

ISS. 2	3	4	5
ECO 125	ECO 203	ECO 203	ECO276
5.11.75	10.3.76	10.3.76	9.9.76

DATE 8/76

DRAWN BY PW

CHECK PM

NEXT DRAWING Prod/AD. 2.2.77

datron ELECTRONICS LTD

TITLE 1051 1059 – RATIO AMPL 1V I/P

DRAWING NUMBER 400091

SHEET 2 OF 6

J. W. 1164

DESIGNATOR	DATRON PART No.	DESCRIPTION	PRINCIPAL MANUFACTURER	MANUFACTURER'S PART No.	No. USED Per Assy.
R24	063203	20K 3/8" CERMET POT	BECKMAN	72P	1
R25		FSV			1
R26		FSV			1
R27	NOT USED				
R28	000 103	10K 5% 1/4W CARBON	MULLARD	CR25	3
R29	000 103	10K "	"	"	—
R30	000 272	2K7 "	"	"	1
R31	000 182	1K8 "	"	"	1
R32	000103	10K "	"	"	—
C1	120004	.68μF 10% POLYCARB.	ADVANCE	CMD 15A	2
C2	120004	"	"	"	—
C3	102102	1000pF CER. DISC	ERIE	801	2
C4	102102	"	"	"	—
C5	120013	.15μF 10% 63V POLYCARB.	ADVANCE	CMD 4	2
C6	120013	"	"	"	—
C7	102330	33pF CER DISC	ERIE	801	1
C8	101103	.01μF "	"	"	3
C9	101103	"	"	"	—
C10	101103	"	"	"	—

NOTES.

ISS.	SEE	SHEET	2

DATE 8/76

DRAWN BY PW

CHECK

NEXT DRAWING

datron ELECTRONICS LTD

TITLE 1051 1059 RATIO AMP^L 1V I/P

DRAWING NUMBER 400091

SHEET 3 OF 6

J. W. 1164

DESIGNATOR	DATRON PART No.	DESCRIPTION	PRINCIPAL MANUFACTURER	MANUFACTURER'S PART No.	No. USED Per Assy.
D1	200008	LOW LEAKAGE	FAIRCHILD	IN458A	4
D2	200008	"	"	"	—
D3	200008	"	"	"	—
D4	200008	"	"	"	—
D5	200001	Si GP		IN4148	4
D6	200001	"		"	—
D7	200001	"		"	—
D8	200001	"		"	—
M1	290014	LINEAR LM312H OP. AMP.	NATIONAL	LM312H (GREEN/ORANGE)	2
M2	290014	"	"	"	—
M3	290009	" LM301AH OP. AMP.	"	LM301AH (BLACK/WHITE)	1
M4	220005	OPTO-ISOLATOR FCD 820	FAIRCHILD	FCD 820	1
Q1	240001	Si NPN GP		BC 184K	3
Q2	240001	"		"	—
Q3	240001	"		"	—

NOTES.

ISS.	SEE	SHEET	2

DATE 8/76
DRAWN BY FW
CHECK
NEXT DRAWING

datron ELECTRONICS LTD

TITLE 1051 1059 RATIO AMPL. 1V I/P

DRAWING NUMBER 400091

SHEET 4 OF 6

J. W. 1164

DESIGNATOR	DATRON PART No.	DESCRIPTION	PRINCIPAL MANUFACTURER	MANUFACTURER'S PART No.	No. USED Per Assy.
K1	330003	RELAY 28v 3.2K BIF.	POTTER & BRUMFIELD	R10-E1-L2-S3.2K	1
	602007	RELAY SOCKET	POTTER & BRUMFIELD	A11-1	1
	630005	CLIP	" "	P28-1	1
S1	700019	SLIDE SWITCH	SIEMENS	C42315-A60-A1	1
	410015-6	P.C.B	DATRON		1
	602001	F.S.V. TERMINAL	MOLEX	02-04-1875	15
	612006	M3 STANDOFF x9.5mm LG.	HARWIN		4
	611004	SCREW M3x6mm POZI PAN	G.K.N		4
	601002	CONNECTOR TERMINAL	AMP	60803-1	5
	620003	SOLDER TERMINAL	HARWIN	H-2105A	11
	510333	7/.2 P.V.C. INSUL. WIRE-ORANGE			A/R
	510222	7/.2 P.V.C INSUL. WIRE-RED			A/R
	510666	" -BLUE			A/R
	510555	" -GREEN			A/R
	510111	" -BROWN			A/R
	510999	" -WHITE			A/R
	510000	" -BLACK			A/R
	510888	" -GREY			A/R
	510001	" -PINK			A/R

NOTES.

ISS.	SEE	SHEET	2

DATE 8/76

DRAWN BY TW

CHECK

NEXT DRAWING

datron ELECTRONICS LTD

TITLE 1051 1059 - RATIO AMPL 1v i/P

DRAWING NUMBER 400091

SHEET 5 OF 6

J. W. 1164

DESIGNATOR	DATRON PART No.	DESCRIPTION	PRINCIPAL MANUFACTURER	MANUFACTURER'S PART No.	No. USED Per Assy.
	521002	16/.2 P.V.C INSUL. WIRE-WHITE/RED			A/R
	521003	" -ORANGE/BLK			A/R
	521004	" -RED/BLK			A/R
	510777	7/.2 " -VIOLET			A/R
	622003	SNAP CONNECTOR	AMP	60983-1	16
	590001	SLEEVE	HELLERMAN	HIS-15	12
	590011	SLEEVE	"	HIS	A/R
	604006	5 WAY PLUG	PYE	MSP	1
	605007	5 WAY SOCKET	"	MSS	1
	606001/A	LOCKING HOOD (PANEL MT.)	"	MHN	1
	606001/B	LOCKING HOOD (CABLE MT.)	"		1
	606002	NUT	"	MN	1
	606003	WASHER	"	MLW	1

NOTES.

ISS. SEE	SHEET	2

DATE 8/76
DRAWN BY PW
CHECK
NEXT DRAWING

datron ELECTRONICS LTD

TITLE 1051 1059 RATIO AMPL 1v I/P

DRAWING NUMBER 400091

SHEET 6 OF 6

J. W. 1164

DESIGNATOR	DATRON PART No.	DESCRIPTION	PRINCIPAL MANUFACTURER	MANUFACTURER'S PART No.	No. USED Per Assy.
R1	063203	20K POT CERMET	BECKMAN	72P	3
R2	063203	20K " "	"	"	–
R3	011003	100K 1% 1/8W M/F	WELWYN	4033C	2
R4	011003	100K 1% 1/8W M/F	"	"	–
R5	063202	2K POT CERMET	BECKMAN	72P	2
R6	063202	2K " "	"	"	–
R7	050015	100K .25% 1/8W M/F	ERG	EE125	2
R8	050015	100K " " "	"	"	–
R9		FSV			1
R10		FSV			1
R11	063205	2M POT CERMET	BECKMAN	72P	1
R12, R13	090014	9K995/50K .02%	MANN	3C-B	1 MATCHED PAIR
R14	000102	1K 5% 1/4W CARBON	MULLARD	CR25	1
R15	063203	20K POT CERMET	BECKMAN	72P	–
R16	000394	390K 5% 1/4W CARBON	MULLARD	CR25	1
R17	000100	10R 5% 1/4W CARBON	"	"	1
R18	000822	8K2 " " "	"	"	1
R19		FSV			1
R20		FSV			1
R21	000103	10K 5% 1/4W CARBON	MULLARD	CR25	3
R22	000103	10K " " "	"	"	–
R23	000272	2K7 " " "	"	"	1

NOTES.

ISS.	2	3
ECO	269	ECO 277
	8.	7-76

DATE 25.8.76

DRAWN BY M.J.D.

CHECK

NEXT DRAWING

PROD / 10.

datron ELECTRONICS LTD

TITLE 10V/100V RATIO AMP 1051

DRAWING NUMBER 400125

SHEET 2 OF 6

J. W. 1164

DESIGNATOR	DATRON PART No.	DESCRIPTION	PRINCIPAL MANUFACTURER	MANUFACTURER'S PART No.	No. USED Per Assy.
R24	000182	1K8 5% ¼W CARBON	MULLARD	CR25	1
R25	000103	10K " " "	"	"	–
R26	000226	22M 10% " "	ALLEN BRADLEY	CB10	1
R27		FSV			1
AN1	090018	THIN FILM NETWORK	ALLEN BRADLEY	FN207	2
AN2	090018	" " "	" "	"	–
C1	120004	·68μF 10% 63V POLYCARB.	ADVANCE	CMD15A	2
C2	120004	·68μF " " "	"	"	–
C3	102102	1nF 500V CER. DISC	ERIE	801	1
C4	120013	·15μF 10% 63V POLYCARB.	ADVANCE	CMD4	1
C5	102330	33pF 500V CER DISC	ERIE	801	1
C6	101103	10nF 250V " "	"	"	3
C7	101103	10nF " " "	"	"	–
C8	101103	10nF " " "	"	"	–
D1	200008	Si. LOW LEAKAGE	FAIRCHILD	IN458A	4
D2	200008	Si. " "	"	"	–

NOTES.

ISS.								
SEE SHT 2								

DATE 25-8-76

DRAWN BY M.J.D.

CHECK

NEXT DRAWING

datron ELECTRONICS LTD

TITLE 10V/100V RATIO AMP. 1051

DRAWING NUMBER 400125

SHEET 3 OF 6

J. W. 1164

DESIGNATOR	DATRON PART No.	DESCRIPTION	PRINCIPAL MANUFACTURER	MANUFACTURER'S PART No.	No. USED Per Assy.
D3	200008	Si. LOW LEAKAGE	FAIRCHILD	IN458A	–
D4	200008	Si. " "	"	"	–
D5	200001	Si. G.P.		IN4148	4
D6	200001	Si. "		"	–
D7	200001	Si. "		"	–
D8	200001	Si. "		"	–
Q1	240001	Si NPN GP		BC184K	3
Q2	240001	Si " "		"	–
Q3	240001	Si " "		"	–
M1	290014	312 OP. AMP.	NATIONAL	LM312H (GREEN/ORANGE)	1
M2	290009	301 " "	"	LM301AH (BLACK/WHITE)	1
M3	220005	OPTO ISOLATOR	FAIRCHILD	FCD 820	1
S1	700019	SLIDE SWITCH	SIEMENS	C42315-A60-A1	1
RL1	330003	RELAY 28V 3K2 BIF.	POTTER & BRUMFIELD	R10-E1-L2-S3.2K	1
	602007	RELAY SOCKET	" "	A11-1	1
	630005	CLIP	" "	P28-1	1
	410037-2	P.C.B.			1

NOTES.

ISS.								
SEE SHT. 2								

DATE 25-8-76

DRAWN BY M.J.D

CHECK

NEXT DRAWING

datron ELECTRONICS LTD

TITLE 10V/100V RATIO AMP. 1051

DRAWING NUMBER 400125

SHEET 4 OF 6

J. W. 1164

DESIGNATOR	DATRON PART No.	DESCRIPTION	PRINCIPAL MANUFACTURER	MANUFACTURER'S PART No.	No. USED Per Assy.
	601002	SNAP CONNECTOR	AMP	60803-1	7
	602001	FSV TERMINAL	MOLEX	02-04-1875	11
	620003	SOLDER TERMINAL	HARWIN	H2105A	11
	612006	STANDOFF M3 x 9.5 LG.	"		4
	540002	22SWG. TINNED CU. WIRE			A/R
	590001	SLEEVE,	HELLERMAN	H15-15	A/R
	590002	SLEEVE	HELLERMAN	H30-20	1
	510222	7/.2 P.V.C. INSUL. WIRE - RED			A/R
	510666	" " " " - BLUE			A/R
	510555	" " " " - GREEN			A/R
	510111	" " " " - BROWN			A/R
	510999	" " " " - WHITE			A/R
	510000	" " " " - BLACK			A/R
	510888	" " " " - GREY			A/R
	511001	" " " " - PINK			A/R
	521002	16/.2 " " " WHT./RED			A/R
	521003	" " " " OR/BK			A/R
	521004	" " " " RED/BK			A/R
	602003	SNAP RECEPTACLE	AMP	60983-1	18
	590011	BLACK SLEEVING	HELLERMAN	H15	A/R
	510333	7/.2 P.V.C. INSUL. WIRE - ORANGE			A/R
	510777	" " " " - VIOLET			A/R

NOTES.

ISS.								
SEE SHT. 2								

DATE 25-8-76	datron ELECTRONICS LTD
DRAWN BY M.J.D	TITLE 10V/100V RATIO AMP 1051
CHECK	
NEXT DRAWING	
	DRAWING NUMBER 400125 — SHEET 5 OF 6

J. W. 1164

DESIGNATOR	DATRON PART No.	DESCRIPTION	PRINCIPAL MANUFACTURER	MANUFACTURER'S PART No.	No. USED Per Assy.
	604006	5 WAY PLUG	PYE	M5P	1
	605007	5 WAY SOCKET	"	M5S	1
	606001/A	LOCKING HOOD (PANEL MT.)	"	MHN	1
	606001/B	LOCKING HOOD (CABLE MT.)	"		1
	606002	NUT	"	MN	1
	606003	WASHER	"	MLW	1

NOTES.

ISS.								
SEE SHT 2								

DATE 25-8-76

DRAWN BY M.J.D.

CHECK

NEXT DRAWING

datron ELECTRONICS LTD

TITLE 10V/100V RATIO AMP 1051

DRAWING NUMBER 400125

SHEET 6 OF 6

DESIGNATOR	DATRON PART No.	DESCRIPTION	PRINCIPAL MANUFACTURER	MANUFACTURER'S PART No.	No. USED Per Assy.
R1	008010	0·5R 5W WIREWOUND	MANN		1
R2	008009	0R22 5W "	WELWYN	W21	2
R3	008009	0R22 " "	"	W21	—
R4	070076	0R501 ·1% "	MANN	S9130	1
R5	000101	100R 5% ¼W CARBON	MULLARD	CR25	1
R6	063501	500R ⅜" CERMET POT	BECKMAN	72P	1
R7	070077	5R01 ·1% WIREWOUND	MANN	4L-B	1
R8	000102	1k 5% ¼W CARBON	MULLARD	CR25	1
R9	063502	5k ⅜" CERMET POT	BECKMAN	72P	1
R10	070078	50R1 ·1% WIREWOUND	MANN	MX125B	1
R11	000103	10K 5% ¼W CARBON	MULLARD	CR25	1
R12	063503	50k ⅜" CERMET POT	BECKMAN	72P	1
R13	070079	500R ·1% WIREWOUND	MANN	MX125B	1
R14, R15	000188	1R8 5% ¼W CARBON	MULLARD	CR25	2
R16	000104	100K 5% ¼W CARBON	"	"	1
R17	063504	500k ⅜" CERMET POT.	BECKMAN	72P	1
R18	000223	22K 5% ¼W CARBON	MULLARD	CR25	2
R19	000223	22K " " "	"	"	—
R20	000123	12K " " "	"	"	3
R21	000123	12K " " "	"	"	—
R22	000823	82K " " "	"	"	1
R23	000475	4M7 10% " "	"	"	1
R24	000105	1M 5% " "	"	"	2

NOTES.

ISS. 1	2	3	4	5	6	7	8	9
✓	ECO 145	ECO 231	ECO 239	ECO 216	ECO 295	ECO 375	ECO 331	ECO 411
12/1/76	30/1/76	1/9/76	6.9.76	6.9.76	19.10.76	2-2-77	2-2-77	30-3-77

DATE 5.12.75

DRAWN BY IV

CHECK

NEXT DRAWING

L.A.D. 22.77

datron ELECTRONICS LTD

TITLE 1059 CURRENT BOARD ASSEMBLY

DRAWING NUMBER 400113

SHEET 2 OF 5

J. W. 1164

DESIGNATOR	DATRON PART No.	DESCRIPTION	PRINCIPAL MANUFACTURER	MANUFACTURER'S PART No.	No. USED Per Assy.
R25	000105	1M 5% 1/4W CARBON	MULLARD	CR25	–
R26	000275	2M7 10% " "	"	"	1
R27	000123	12K 5% " "	"	"	–
R28	000225	2M2 10% " "	"	"	1
C1	150002	10µF 16v 20% TANT	UNION CARBIDE	K10E16	2
C2	150002	10µF " " "	" "	"	–
C3	110005	·01µF 10% POLYESTER	MULLARD	C280	1
C4	150015	10µF 35v 20% TANT	UNION CARBIDE	K10E35	2
C5	150015	10µF " " "	" "	"	–
C6	102101	100pF DISC CERAMIC	ERIE	801	1
C7	130056	1300pF 63v POLYSTYRENE			1
D1	200010	LOW POWER DIODE	INT. RECTIFIER	30S1	2
D2	200010	" " "	" "	"	–
D3	213003	5·1v ZENER DIODE	GEN. SEMICON.	IN5908	2
D4	213003	5·1v " "	" "	"	–
D5	200001	DIODE Si. G.P.		IN4148	6
D6	200001	" " "		"	–
D7	200005	DIODE Ge "	HUGHES	HG5009	1
D8 – D11	200001	" Si. "		IN4148	–

NOTES.

SEE SHEET 2 FOR LATEST ISSUE

ISS.								

DATE 5.12.75	datron ELECTRONICS LTD
DRAWN BY IV	TITLE 1059 CURRENT BOARD ASSEMBLY
CHECK	
NEXT DRAWING	DRAWING NUMBER 400113 — SHEET 3 OF 5

DESIGNATOR	DATRON PART No.	DESCRIPTION	PRINCIPAL MANUFACTURER	MANUFACTURER'S PART No.	No. USED Per Assy.
M1	290020	LINEAR I.C. 301 OP AMP	NATIONAL	LM301AH (BLK/ORANGE)	1
" *	290019	" " " " "	"	LM301AH (RED/WHITE)	
" *	290010	" " " " "	"	LM301AH (RED/ORANGE)	
Q1	250004	PNP SIL. HF GEN. PURP.		2N3906	1
	400120	CURRENT INPUT CABLE	DATRON		1/A
F1	920027	5A. SEMICON. PROTECT FUSE	ENGLISH ELECTRIC	G.S.A. 5A	2
F2	920025	2A. QUICK BLOW 20mm FUSE	BELLING LEE		1
	920026	FUSE HOLDER	COMWAY ELECTRONICS	FAS 031 3511	1
	410034 - 3	P.C.B.	DATRON		1
	330005	RELAY	AMF	R10-E1-X2-S3·2K	1
	459112	RELAY BRACKET	KDP ES		1
	611004	M3 x 6mm POZI-PAN	G.K.N.		9
	615002	M3 NUT	"		1
	615005	3-48 UNC NUT	"		1
	613005	M3 SHAKEPROOF	"		6
	614003	STANDOFF M3 CLEAR x 6mm	HARWIN	CS2117B	3
	612005	" M3 x 23mm LG	"		4
	450069	GUARD SHIELD			1
	620003	RIVET TERMINAL	HARWIN	H2105A	2
	590001	SLEEVE	HELLERMAN		3
	630024	STEATITE INSULATING BEAD. N° 2	PARK ROYAL PORCELAINS	N° 2	14
	604010	16-WAY AMP MALE CONN.	AMP.	1-163749-5	1 SET
	612004	STANDOFF M3 x 4mm	HARWIN		4

NOTES. * 2 ALTERNATIVE DEVICES FOR M1.

SEE SHEET 2 FOR LATEST ISSUE

ISS.								

DATE 5.12.75

DRAWN BY IV.

CHECK

NEXT DRAWING

datron ELECTRONICS LTD

TITLE 1059 CURRENT BOARD ASSEMBLY

DRAWING NUMBER 400113

SHEET 4 OF 5

J. W. 1164

DESIGNATOR	DATRON PART No.	DESCRIPTION	PRINCIPAL MANUFACTURER	MANUFACTURER'S PART No.	No. USED Per Assy.
	510 222	7/-2 WIRE P.V.C. COVERED - RED			A/R
	510 333	" " " " - ORANGE			A/R
	510 444	" " " " - YELLOW			A/R
	510 555	" " " " - GREEN			A/R
	510 666	" " " " - BLUE			A/R

NOTES.

SEE SHEET 2 FOR LATEST ISSUE

ISS.								

DATE 5.12.75	datron ELECTRONICS LTD
DRAWN BY IV	TITLE 1059 CURRENT BOARD ASSEMBLY
CHECK	
NEXT DRAWING	DRAWING NUMBER 400113 — SHEET 3 OF 3

J. W. 1164

DESIGNATOR	DATRON PART No.	DESCRIPTION	PRINCIPAL MANUFACTURER	MANUFACTURER'S PART No.	No. USED Per Assy.
R21, R22	008008	4K7. ½W THICK FILM			2
C57, C58	104021	15pF. 1000V. NPO. ±20%	ERIE	801	2
	410025-6	P.C. BOARD		410025-6	1
	620003	TERMINAL RIVET	HARWIN	H2105A	12
	612008	STANDOFF M3 × 6mm LG.	CAMBION	350-5138-09-07	2

NOTES.

ISS. 1	2	3	4
✓	ECO 163	164	ECO 339
12/1/76	12/2/76	26.2.76	2-2-77

DATE 1/12/75

DRAWN BY

CHECK

NEXT DRAWING

(AD. 2.2.77

datron ELECTRONICS LTD

TITLE 1057 1059 -SWITCH BD. ASSY.

DRAWING NUMBER 400097

SHEET 2 OF 2

J. W. 1164

DESIGNATOR	DATRON PART No.	DESCRIPTION	PRINCIPAL MANUFACTURER	MANUFACTURER'S PART No.	No. USED Per Assy.
	410033-2	P.C.B.			1
D1-D11	220008	L.E.D - RED DIFFUSED	PYE TMC	521-9165	11
	604 012	CONNECTOR STRIP PINS 13-WAY	AMP	1-163740-2	13 (PINS)

NOTES.

ISS.	
1	12/1/76

DATE 19.8.75	datron ELECTRONICS LTD
DRAWN BY I.V.	TITLE L.E.D. P.C.B. ASSY.
CHECK	
NEXT DRAWING	
PROD I.A.D.	DRAWING NUMBER 400117 SHEET 2 OF 2

J. W. 1164

DESIGNATOR	DATRON PART No.	DESCRIPTION	PRINCIPAL MANUFACTURER	MANUFACTURER'S PART No.	No. USED Per Assy.
R1	000 560	56R 5% ¼W CARBON	MULLARD	CR25	1
R2		NOT USED			–
R3	000 182	1K8 5% ¼W CARBON	MULLARD	CR25	1
R4	000 823	82K " " "	"	"	1
R5	063 503	50K. ⅜" CERMET POT.	BECKMAN	72P	2
R6	000 103	10K 5% ¼W. CARBON	MULLARD	CR25	16
R7	063 503	50K ⅜" CERMET POT.	BECKMAN	72P	–
R8	000 822	8K2 5% ¼W. CARBON	MULLARD	CR25	2
R9	063 502	5K ⅜" CERMET POT.	BECKMAN	72P	3
R10	000 821	820R 5% ¼W CARBON	MULLARD	CR25	1
R11	063 502	5K ⅜" CERMET POT	BECKMAN	72P	–
R12	000 122	1K2 5% ¼W CARBON	MULLARD	CR25	2
R13	063 202	2K ⅜" CERMET POT	BECKMAN	72P	1
R14	000 822	8K2 5% ¼W CARBON	MULLARD	CR25	–
R15	063 502	5K ⅜" CERMET POT	BECKMAN	72P	–
R16	000 103	10K 5% ¼W CARBON	MULLARD	CR25	–
R17	000 112	1K1 " " "	"	"	2
R18	000 112	1K1 " " "	"	"	–
R19	000 100	10R " " "	"	"	1
R20	000 121	120R " " "	"	"	1
R21		SEE P/L - SWITCH BOARD	ASSY 400097		–
R22		SEE P/L - SWITCH BOARD	ASSY 400097		–
R23		NOT USED			–

NOTES.

ISS	11	12	13	14	15	16	17	18	19	20	21	22	23
ECO	216	223	224	231	259	345	341	356	372	370	338	410	430
DATE	3.6.76	24.6.76	23.8.76	31.8.76	11.11.76	25.11.76	28.11.76	30.11.76	4-1-77	16.3.77	16.3.77	30.3.77	4.4.77

ISS. 2	3	4	5	6	7	8	9	10
ECO. 139	144	153	167	174	178	188	208	210
12/1/76	19.2.76	25.2.76	27.2.76	2.3.76	9.3.76.	30.3.76.	3.6.76	3.6.76

DATE 3/10/75

DRAWN BY IV

CHECK

NEXT DRAWING

PROD LAD. 2.2.77

datron ELECTRONICS LTD

TITLE 1059 - ANALOGUE

DRAWING NUMBER 400096

SHEET 2 OF 15

J. W. 1164

DESIGNATOR	DATRON PART No.	DESCRIPTION	PRINCIPAL MANUFACTURER	MANUFACTURER'S PART No.	No. USED Per Assy.
R24	000 104	100K 5% ¼W CARBON	MULLARD	CR25	13
R25	000 106	10M 10% " "	"	"	4
R26	000 113	11K 5% " "	"	"	1
R27	000 103	10K " " "	"	"	–
R28	*	5% ¼W CARBON	"	"	
R29	*	" " "	"	"	
R30 - R33	003223	22K 10% 2W CARBON	ALLEN BRADLEY	HB	8
R34	000204	200K 5% ¼W CARBON	MULLARD	CR25	1
R35		NOT USED			
R36	000476	47M " " "	"	"	2
R37	000224	220K 5% " "	"	"	1
R38	064105	1M MULTI-TURN CERMET POT	BECKMAN	89P	2
R39	000335	3M3 10% ¼W CARBON	MULLARD	CR25	–
R40	000106	10M " " "	"	"	–
R41	000103	10K 5% " "	"	"	–
R42, R43	440023	FSV (100k 1% MF)	WELWYN	4033C	2 OF KIT
R44	000223	22K 5% ¼W. CARBON	MULLARD	CR25	2
R45	063203	20K 3/8" CERMET POT	BECKMAN	72P	1
R46	000393	39K 5% ¼W CARBON	MULLARD	CR25	1
R47	000474	470K " " "	"	"	4
R48	000335	3M3 10% " "	"	"	2
R49	000102	1K " " "	"	"	1

NOTES. * SUPPLIED IN KIT PART Nº 090028

SEE SHEET 2 FOR LATEST ISSUE

ISS.								

DATE 3/10/75

DRAWN BY IV

CHECK

NEXT DRAWING

datron ELECTRONICS LTD

TITLE 1059-ANALOGUE

DRAWING NUMBER 400096

SHEET 3 OF

J. W. 1109

DESIGNATOR	DATRON PART No.	DESCRIPTION	PRINCIPAL MANUFACTURER	MANUFACTURER'S PART No.	No. USED Per Assy.
R50, R51	440024	FSV 1M-10M 1% MF	WELWYN	4033C	2 OF KIT
R52	000 474	470K 5% ¼W CARBON	MULLARD	CR25	–
R53	000 474	470K " " "	"	"	–
R54	064 105	1M MULTI-TURN CERMET	BECKMAN	89P	–
R55	000 474	470K 5% ¼W CARBON	MULLARD	CR25	–
R56	000 512	5K1 " " "	"	"	1
R57	000 333	33K " " "	"	"	1
R58	000226	22M 10% " "	"	"	1
R59	070 066	10k ·1% W/W	MANN	MX125B	3
R61	070066	10k ·1% W/W	"	MX125B	–
R60	063 500	50R ⅜ CERMET POT	BECKMAN	72P	3
R62	070067	20k ·1% W/W	MANN	MX125B	1
R64	070068	2k2 ·1% W/W	"	MX125B	1
R63	000275	2M7 10% ¼W CARBON	MULLARD	CR25	1
R65	063 100	10R ⅜" CERMET POT.	BECKMAN	72P	2
R66	000 103	10K 5% ¼W CARBON	MULLARD	CR25	–
R67	000 103	10K " " "	"	"	–
R68	063 104	100K ⅜" CERMET POT	BECKMAN	72P	2
R69	000473	47K 5% ¼W CARBON	MULLARD	CR25	1
R70	000273	27K " " "	"	"	3
R71	070069	4k7 ·1% W/W	MANN	MX125B	1
R74	070070	4k4 ·1% W/W	"	MX125B	1

NOTES.

SEE SHEET 2 FOR LATEST ISSUE

ISS								

DATE 3/10/75

DRAWN BY IV

CHECK

NEXT DRAWING

datron ELECTRONICS LTD

TITLE 1059-ANALOGUE

DRAWING NUMBER 400096

SHEET 1A OF

J. W. 1164

DESIGNATOR	DATRON PART No.	DESCRIPTION	PRINCIPAL MANUFACTURER	MANUFACTURER'S PART No.	No. USED Per Assy.
R73		F.S.V. (150k - 470k)	MULLARD	CR25	1
R72	063 100	10R 3/8" CERMET POT	BECKMAN	72P	—
R75	070071	2k4 ·1% w/w	MANN	MX125B	1
R79	070066	10k ·1% w/w		MX125B	—
R77	000 104	100K 5% 1/4W CARBON	MULLARD	CR25	—
R78	000 103	10K " " "	"	"	—
R76	000562	5k6 5% 1/4W CARBON	MULLARD	CR25	1
R80	011052	10K5 1% 1/8W M/F	WELWYN / HOLCO	4033C / H4	1
R81	011201	1K2 1% 1/8W M/F	" "	" "	1
R82	000273	27K 5% 1/4W CARBON	MULLARD	CR25	—
R83	000103	10K " " "	"	"	—
R84	063500	50R 3/8" CERMET POT	BECKMAN	72P	—
R85	000103	10K 5% 1/4W CARBON	MULLARD	CR25	—
R86	000472	4K7 " " "	"	"	2
R87	000123	12K " " "	"	"	1
R88	000302	3K " " "	"	"	1
R89	000103	10K 10% " "	"	"	—
R90 - R93	003223	22K 10% 2W CARBON	ALLEN BRADLEY	HB	—
R94	000105	1M 5% 1/4W CARBON	MULLARD	CR25	3
R95	000364	360K " " "	"	"	1
R96		FSV (4M7 - 100M)	MULLARD	CR25	1
R97		FSV (4M7 - 100M)	"	"	1
R98	000334	330K 5% 1/4W CARBON	MULLARD	CR25	1

NOTES.

SEE SHEET 2 FOR LATEST ISSUE

ISS.												

DATE 3/10/75

DRAWN BY IV

CHECK

NEXT DRAWING

datron ELECTRONICS LTD

TITLE 1059-ANALOGUE

DRAWING NUMBER 400096

SHEET 5 OF

J. W. 1164

DESIGNATOR	DATRON PART No.	DESCRIPTION	PRINCIPAL MANUFACTURER	MANUFACTURER'S PART No.	No. USED Per Assy.
R99	000 565	5M6 10% ¼W CARBON	MULLARD	CR25	1
R100	000107	100M 10% ¼W CARBON	MULLARD	CR25	2
R101	000104	100k " " "	"	"	–
R102	000 185	1M8 10% " "	"	"	1
R103	000 331	330R 5% " "	"	"	1
R104		NOT USED			
R105	063104	100K 3/8" CERMET POT.	BECKMAN	72P	–
R106		NOT USED			
R107		FSV (1k – 470k)	MULLARD	CR25	1
R108		FSV (1k – 470k)	"	"	1
R109	000 273	27K 5% ¼W CARBON	MULLARD	CR25	–
R110	000 163	16K " " "	"	"	1
R111	000 105	1M " " "	"	"	–
R112	000 202	2K " " "	"	"	1
R113	000 105	1M " " "	"	"	–
R114	014 021	4K02 1% ⅛W M/F	WELWYN / HOLCO	4033C / H4	2
R115	063 101	100R 3/8" CERMET POT	BECKMAN	72P	3
R116	014 021	4K02 1% ⅛W M/F	WELWYN / HOLCO	4033C / H4	–
R117	014 701	4K7 1% ⅛W M/F	" "	" "	2
R118	000472	4K7 5% ¼W CARBON	MULLARD	CR25	–
R119	063 105	1M 3/8" CERMET POT	BECKMAN	72P	1
R120	000685	6M8 10% ¼W CARBON	MULLARD	CR25	1
R121	014701	4K7 1% ⅛W M/F	WELWYN / HOLCO	4033C / H4	–

NOTES.

SEE SHEET 2 FOR LATEST ISSUE

ISS.								

DATE 3/10/75

DRAWN BY IV

CHECK

NEXT DRAWING

datron ELECTRONICS LTD

TITLE 1059 - ANALOGUE

DRAWING NUMBER 400096

SHEET 6 OF

J. W. 1164

DESIGNATOR	DATRON PART No.	DESCRIPTION	PRINCIPAL MANUFACTURER	MANUFACTURER'S PART No.	No. USED Per Assy.
R122	000103	10K 5% ¼W CARBON	MULLARD	CR25	–
R123	000122	1K2 " " "	"	"	–
R124		FSV (470k – 4M7)	"	"	1
R125	011002	10K 1% ⅛W M/F	WELWYN / HOLCO	4033C / H4	2
R126	063 101	100R ⅜" CERMET POT	BECKMAN	72P	–
R127	012 002	20K 1% ⅛W M/F	WELWYN / HOLCO	4033C / H4	2
R128	000107	100M 10% ¼W CARBON	MULLARD	CR25	–
R129	000332	3K3 5% " "	"	"	1
R130		FSV (4M7 – 10M)	"	"	1
R131	063 205	2M ⅜" CERMET POT	BECKMAN	72P	3
R132	000476	47M 10% ¼W CARBON	MULLARD	CR25	–
R133		FSV (4M7 – 10M)	"	"	1
R134	000 222	2K2 5% ¼W CARBON	MULLARD	CR25	2
R135	000 203	20K " " "	"	"	1
R136	*	FSV			
R137	000270	27R 5% ¼W CARBON	MULLARD	CR25	1
R138	063 500	50R ⅜" CERMET POT	BECKMAN	72P	–
R139	000 223	22K 5% ¼W CARBON	MULLARD	CR25	–
R140	000 104	100K " " "	"	"	–
R141	000396	39M 10% " "	"	"	1
R142	000108	1R 5% " "	"	"	1
R143	000 563	FSV (39k – 75k) FIT 56K ON ASSY.	"	"	1
R144	000104	100K 5% ¼W CARBON	MULLARD	CR25	–

NOTES. * SELECTED WITH 290025

SEE SHEET 2 FOR LATEST ISSUE

ISS.								

DATE 3/10/75

DRAWN BY IV

CHECK

NEXT DRAWING

datron ELECTRONICS LTD

TITLE 1059-ANALOGUE

DRAWING NUMBER 400096

SHEET 7 OF

J. W. 1164

DESIGNATOR	DATRON PART No.	DESCRIPTION	PRINCIPAL MANUFACTURER	MANUFACTURER'S PART No.	No. USED Per Assy.
R145	000392	3K9 5% ¼W CARBON	MULLARD	CR25	1
R146.	011003	100K 1% ⅛W M/F	WELWYN/HOLCO	4033C/H4	3
R147	063205	2M ⅜" CERMET POT	BECKMAN	72P	–
R148	000106	10 M 10% ¼W CARBON	MULLARD	CR25	–
R149	000222	2K2 5% " "	"	"	–
R150	063205	2M ⅜" CERMET POT	BECKMAN	72P	–
R151	000106	10 M 10% ¼W CARBON	MULLARD	CR25	–
R152	000104	100K 5% ¼W CARBON	"	"	–
R153	011003	100K 1% ⅛W M/F	WELWYN/HOLCO	4033C/H4	–
R154	014302	43K 1% ⅛W M/F	" "	" "	1
R155		FSV (390K – 3M9)	MULLARD	CR25	1
R156	011002	10K 1% ⅛W M/F	WELWYN/HOLCO	4033C/H4	–
R157	063101	100R ⅜" CERMET POT	BECKMAN	72P	–
R158	000103	10K 5% ¼W CARBON	MULLARD	CR25	–
R159	000103	10K 10% " "	"	"	–
R160 - R163	000104	100K 5% ¼W CARBON	MULLARD	CR25	–
R164	000181	180R " " "	"	"	8
R165	000103	10K " " "	"	"	–
R166 - R168	000104	100K " " "	"	"	–
R169 - R175	000181	180R " " "	"	"	–
R176, R177	000103	10K 10% " "	"	"	–
R178	011003	100K 1% ⅛W M/F	WELWYN/HOLCO	4033C/H4	–
R179	012002	20K 1% ⅛W M/F	" "	"	–

NOTES.

SEE SHEET 2 FOR LATEST ISSUE

ISS.								

DATE 3/10/75

DRAWN BY IV

CHECK

NEXT DRAWING

datron ELECTRONICS LTD

TITLE 1059 ANALOGUE

DRAWING NUMBER 400096

SHEET 8 OF

J.W. 1164

DESIGNATOR	DATRON PART No.	DESCRIPTION	PRINCIPAL MANUFACTURER	MANUFACTURER'S PART No.	No. USED Per Assy.
R180 *	000336	33M 10% ¼W CARBON	ALLEN BRADLEY	CB10	1 *
R181 *	000107	100M " " "	"	"	1 *
R182	000272	2K7 5% " "	MULLARD	CR25	1
C1	130057	210pF 1% 630v POLYSTYRENE	SOFLEX	HSS	1
C2	140007	15pF TRIMMER	JACKSON	TETFER VPC	4
C3	130058	220pF 1% 630v POLYSTYRENE	SOFLEX	HSS	1
C4	140007	15pF TRIMMER	JACKSON	TETFER VPC	–
C5	130042	100pF 1% 630v POLYSTYRENE	SOFLEX	HS	1
C6	130041	1000pF 1% 630V "	"	"	1
C7	140007	15pF TRIMMER	JACKSON	TETFER VPC	–
C8 *	102108	1pF 500V CER. DISC.	ERIE	861	1 *
C9	130043	11·1 kpF 1% 630V POLYSTYRENE	SOFLEX	HS	1
C10	130046	0·1μF 63V 1% "	"	"	1
C11	120004	·68μF 63v 20% DIPPED TANT.	ADVANCE	CMR15A	2
C12	110013	0·1μF, 250v 10% POLYESTER	MULLARD	C280AE P100K	2
C13, C14	102228	2·2pF CER DISC	ERIE	861	3
C15	150014	·68μF 35v 20% DIPPED TANT	UNION CARBIDE	KR68E35	1
C16	120004	·68μF 63V 20% " "	ADVANCE	CMR15A	–
C17	140010	220nF 400v 10% POLYPROP.	WIMA	MKP10	1
C18		NOT USED			

NOTES. * ONLY REQUIRED WHEN AN ALTERNATIVE 090016 IS USED

SEE SHEET 2 FOR LATEST ISSUE

ISS.								

DATE	3/10/75
DRAWN BY	IV
CHECK	
NEXT DRAWING	

datron ELECTRONICS LTD

TITLE 1059 - ANALOGUE

DRAWING NUMBER 400096

SHEET 9 OF

DESIGNATOR	DATRON PART No.	DESCRIPTION	PRINCIPAL MANUFACTURER	MANUFACTURER'S PART No.	No. USED Per Assy.
C19	140011	100nf. 10% 400v POLYPROP.	WIMA	MKP10	1
C20	102228	2p2 CER DISC	ERIE	861	–
C21, C22	102471	470pf " "	"	801	2
C23	110013	·1µf. 250v 10% POLYEST.	MULLARD	C280AE/P100K	–
C24 - C27	102330	33pf. CER DISC	ERIE	801	1 (SEE NOTES BELOW)
C28, C29	150001	22µf. 16v 20% DIPPED TANT	UNION CARBIDE	K22E16	2
C30	104021	15pF 1000v ±20% NPO	ERIE	801	3
C31	104021	" " "	"	801	–
C32	120001	·22µf. 1000v. 10% POLYCARB	SUFLEX	SN1380	1
C33	110009	1µf. 100v 10% POLYEST.	WIMA	MKS	1
C34	102108	1pF CER DISC	ERIE	861	1
C35	101103	10nf. 250V " "	"	801	2
C36	102680	68pf " "	"	"	1
C37	150010	330nf. 35V 20% DIPPED TANT.	UNION CARBIDE	KR33E35	2
C38	102470	47pf. CER DISC	ERIE	801	1
C39	110005	10nf 250v 10% POLYESTER	MULLARD	C280AE P10K	1
C40	140007	1-15pf. TRIMMER	JACKSON	TETFER VPC	–
C41	130044	820pf. 160v. 10% POLYSTYRENE	SUFLEX	HS	1
C42	102101	100pf. CER DISC	ERIE	801	4
C43	102478	4p7 " "	"	831	2
C44	101103	10nf. 250v. " "	"	801	–
C45	102100	10pf " " "	"	831	1
C46	102101	100pf " "	"	801	–

NOTES. C24, C26 & C27 ONLY FITTED WHERE 301 REPLACES 741

SEE SHEET 2 FOR LATEST ISSUE

ISS.								

DATE 3/10/75

DRAWN BY IV

CHECK

NEXT DRAWING

datron ELECTRONICS LTD

TITLE 1059 - ANALOGUE

DRAWING NUMBER 400096

SHEET 10 OF –

J. W. 1164

DESIGNATOR	DATRON PART No.	DESCRIPTION	PRINCIPAL MANUFACTURER	MANUFACTURER'S PART No.	No. USED Per Assy.
C47	102 478	4p7 CER DISC	ERIE	831	–
C48	150010	330nf. 35v 20% D/TANT.	UNION CARBIDE	KR33 E35	–
C49	102220	22pf CER DISC	ERIE	831	1
C50	102101	100pf " "	"	801	–
C51	110001	10μf. 63v 10% P.E.T.P. FILM	ADVANCE	MD50A	1
C52	110022	2μ2 63V 10% P.E.T.P. FILM	ADVANCE	MD30A	1
C53	102101	100pf CER DISC	ERIE	801	–
C54	110019	4μ7 63v 10% P.E.T.P. FILM	ADVANCE	MD40A	1
C55*	102220	22pF 500V CER. DISC.	ERIE	801	1*
C57, C58		SEE P/L - SWITCH BOARD ASSY-400097			–
C59*	102221	220pF 500V CER. DISC.	ERIE	801	1*
C60	104021	15pF 1000v ±20% NPO	"	801	–
C61	130015	120pF 160v POLYSTYRENE	"	HS	1
D1, D2	210056	DIODE ZENER 5V6 400mW	FAIRCHILD	BZY88 C5V6	2
D3	210150	DIODE, " 15v "	FAIRCHILD	BZY88 C15	1
D4-D8	200008	DIODE LOW LEAKAGE	"	IN458A	7
D9	200001	DIODE, Si, G.P.		IN4148	13
D10	200001	" " "		"	–
D11	200001	" " "		"	–
D12		NOT USED			
D13, D14	200001	DIODE, Si, G.P.		IN4148	-
D15, D16		NOT USED			
D17, D18		NOT USED			

NOTES. * ONLY REQUIRED WHEN ANI ALTERNATIVE 090016 IS USED

SEE SHEET 2 FOR LATEST ISSUE.

ISS.								

DATE 3/10/75

DRAWN BY IV

CHECK

NEXT DRAWING

datron ELECTRONICS LTD

TITLE 1059 - ANALOGUE

DRAWING NUMBER 400096

SHEET 11 OF

DESIGNATOR	DATRON PART No.	DESCRIPTION	PRINCIPAL MANUFACTURER	MANUFACTURER'S PART No.	No. USED Per Assy.
D19		NOT USED			–
D20, D21	210033	DIODE, ZENER, 3V3, 400mW	"	BZY88 C3V3	2
D22, D23	200001	DIODE, Si, GP.		1N4148	–
D24-D27	200001	" " "		"	–
D28	210075	DIODE, ZENER, 7v5 400mW	FAIRCHILD	BZY88C 7v5	2
D29	210075	DIODE, ZENER, 7v5 400mW	FAIRCHILD	BZY88C 7v5	-
D30, D31	220001	SIL. HOT CARRIER DIODE	HEWLETT- PACKHARD	5082- 2800	2
D32, D33	200008	DIODE, LOW LEAKAGE	FAIRCHILD	1N458A	–
D37, D38	200001	DIODE, Si, G.P.		1N4148	–
Q1-Q3		NOT USED			
Q5	250004	PNP. SIL. GP.		2N3906	1
Q6-Q7	230002	N-FET SWITCH G.P.	TELEDYNE	U1994E/K4416-18	5
		NOT USED			
Q9	250006	PNP. SIL. GP.		BC322	1
Q10	230002	N-FET SWITCH GP.	TELEDYNE	U1994E/K4416-18	–
Q11		NOT USED			
Q12		" "			
Q13		" "			
Q14-Q15	230002	N-FET SWITCH GP.	TELEDYNE	U1994E/K4416-18	–
Q16-Q17		NOT USED			
Q18	250001	PNP SIL GP		BC214K	1

NOTES.

SEE SHEET 2 FOR LATEST ISSUE

ISS.								

DATE 3/10/75

DRAWN BY IV

CHECK

NEXT DRAWING

datron ELECTRONICS LTD

TITLE 1059 - ANALOGUE

DRAWING NUMBER 400096

SHEET 12 OF

J.W. 1164

DESIGNATOR	DATRON PART No.	DESCRIPTION	PRINCIPAL MANUFACTURER	MANUFACTURER'S PART No.	No. USED Per Assy.
M1, M2	280022	QUAD BILATERAL SWITCH	RCA	CD4016A	3
M3	280023	QUAD 2-INPUT NOR GATE	"	CD4001A	4
M4	280017	HEX INVERTER	"	CD4069B	1
M5-M7	280023	QUAD 2-INPUT NOR GATE	"	CD4001A	—
M8	280008	QUAD 2-INPUT NAND GATE	"	MC4011CP	1
M9	290013	LINEAR I.C. LM312 OP. AMP	NATIONAL	LM312H (GREEN/WHITE)	1
M10	280022	QUAD BILATERAL SWITCH	RCA	CD4016A	—
M11	290014	LINEAR LM312H OP. AMP	NATIONAL	LM312H (GREEN/ORANGE)	1
M13	290023	LINEAR I.C. 741 SELECTED	FAIRCHILD	741HC (RED/WHITE)	1
M12, M14	290012	LINEAR I.C. 741 SELECTED	FAIRCHILD	741HC (RED/ORANGE)	2
M15, M16	260012	LINEAR I.C. FET. I/P		CA3130	2
M17	280025	QUAD BILATERAL SWITCH		CD4066A	1
M18.	290019	LINEAR I.C. 301 OP. AMP.	NATIONAL	LM301AH (RED/WHITE)	1
M20	290025	RMS MODULE I.C. KIT	DATRON	SEE DRAWING	1
M21, M22	290010	LINEAR I.C. 301 OP. AMP	NATIONAL	LM301AH (RED/ORANGE)	2
M19	290009	LINEAR I.C. 301 OP. AMP	"	LM301AH (BLK/WHITE)	1
AN1 *	090028	ATTEN. NETWORK KIT	DATRON.		1
SB1	700031	SWITCH BANK, 4x2 POLE INTERLOCK			1
SB2	700033	SWITCH BANK 8+8+6+8 POLE	"		1
SB3	700032	SWITCH BANK 7x2 POLE	"		1
SB4	700034	SWITCH BANK 4+6+8+6+8			1
		+8+6 INTERLOCK			

NOTES. * AN1 ALTERNATIVE 090016 MANN COMPS.

SEE SHEET 2 FOR LATEST ISSUE

ISS.								

DATE 3/10/75

DRAWN BY IV

CHECK

NEXT DRAWING

datron ELECTRONICS LTD

TITLE 1059 - ANALOGUE

DRAWING NUMBER 400096

SHEET 13 OF

J. W. 1164

DESIGNATOR	DATRON PART No.	DESCRIPTION	PRINCIPAL MANUFACTURER	MANUFACTURER'S PART No.	No. USED Per Assy.
	700 020	BUTTON, CHROME	LIPA & ISOSTAT		11
	612 008	STANDOFF M3 x 6mm LG.	CAMBION	350-5138-09-07	2
	410024-6	P.C.BOARD			1
J3	605002	SOCKET, D.I.L. 16PIN	ANTIFERENCE	ICN-163-S3	1
	620001	P.T.F.E. CLOVERLEAF	SEALECTRO	FT-E-12	9 *
	620002	P.T.F.E. STANDOFF	SEALECTRO	STSMIP15	11
	620003	TERMINAL RIVET	HARWIN	H2105A	24
	602001	TERMINAL F.S.V.	MOLEX	02-04-1875	28
	601002	CONNECTOR, SNAP	AMP	60803-1	8
	602004	SOCKET, D.I.L. BREAKAWAY	MOLEX	1938-4	156
	614001	STANDOFF M3 x 4mm LG.	HARWIN	CS2117B	6
	612005	STANDOFF M3 x 23mm LG	HARWIN		2
	450004	ENVIRONMENTAL SHIELD	TIMPAK		1
	450067	A.C. INPUT SHIELD	DATRON		1
	540002	B.T.C. WIRE 22SWG.			A/R
	590004	SLEEVING			A/R
	612004	STANDOFF M3 x 4mm LG.	HARWIN		2
J1	605011	16-WAY SOCKET	AMP	H63680-5	1
	602006	7-WAY D.I.L. BUCKET	MOLEX	2460-7	20
	630025	DOUBLE-SIDED SCOTCHTAPE	BDK PACKAGING		A/R
	630030	CREPE PAPER TAPE ·2"	BRADY	CSR200	80mm
	630023	ADHESIVE CABLE CLIP	SCOTCHFLEX	706	1

NOTES. * 4 EXTRA REQUIRED WHEN ANI ALTERNATIVE 090016 IS USED

SEE SHEET 2 FOR LATEST ISSUE

ISS.								

DATE 3/10/75	datron ELECTRONICS LTD
DRAWN BY IV	TITLE 1059 - ANALOGUE
CHECK	
NEXT DRAWING	DRAWING NUMBER 400096
	SHEET 14 OF

J. W. 1164

DESIGNATOR	DATRON PART No.	DESCRIPTION	PRINCIPAL MANUFACTURER	MANUFACTURER'S PART No.	No. USED Per Assy.
	450063	LOWER GUARD SHIELD			1
	450064	UPPER " "			1
	611004	SCREW POSIPAN M3 X 6			5
	613005	SHAKEPROOF M3			7
	611006	SCREW POSIPAN M3 X 10			2
	630041	MASKING TAPE	SCOTCH	235	80 mm

NOTES.

SEE SHEET 2 FOR LATEST ISSUE

ISS.								

DATE 3/6/76

DRAWN BY MD

CHECK

NEXT DRAWING

datron ELECTRONICS LTD

TITLE 1059-ANALOGUE

DRAWING NUMBER 400096

SHEET 15 OF 15

J. W. 1164

1	2	3	4

DRAWING No. 400096

FIRST USED ON 1059

THIRD ANGLE PROJECTION

DRAWN IN ACCORDANCE WITH BS 308

M3X6 STANDOFF FIT TO OTHER SIDE 612008

4 OFF WIRE LINKING CLOVERLEAF 540002

9 OFF P.T.F.E. CLOVERLEAF 620001

AN1 FIT EITHER 090028 OR 090016 MANN COMPS., R180, R181, C8, C55, C59, 4 P.T.F.E. CLOVERLEAF (620001) AND LINK SHOWN DASHED.

M3 X 6 STANDOFF FIT TO OTHER SIDE 612008

J1 FIT TO OTHER FIT 2 LAYERS CREPE TAPE (630030) BETW AND PCB.

PROCEDURE FOR MOUNTING SWITCH BANKS

1. CHECK 3 OFF M3 STANDOFFS 612004 HAVE BEEN FITTED.
2.
3. REMOVE SPRINGS FROM END OF LATCH BARS OF SB2 & SB4
4. ADD FOAM STRIP (630025) 2 LAYERS 1/4" x 1/16" THICK TO UNDERSIDE OF EACH SWITCH FRAME.
5. TACK SWITCH BANKS IN POSITION ENSURING THAT THEY ARE DIRECTLY IN LINE WITH EACH OTHER AND PARALLEL TO SURFACE OF BOARD.
6. CHECK FOR SMOOTH OPERATION.
7. SOLDER IN PLACE AND CLIP PINS ON ANALOGUE SIDE OF SWITCHES.
8. SWITCH SPINDLE C/L TO BE 6·75 mm ABOVE TOP SURFACE OF PCB.
9. REMOVE SPRINGS FROM SPINDLE ENDS OF SB1 & SB3.

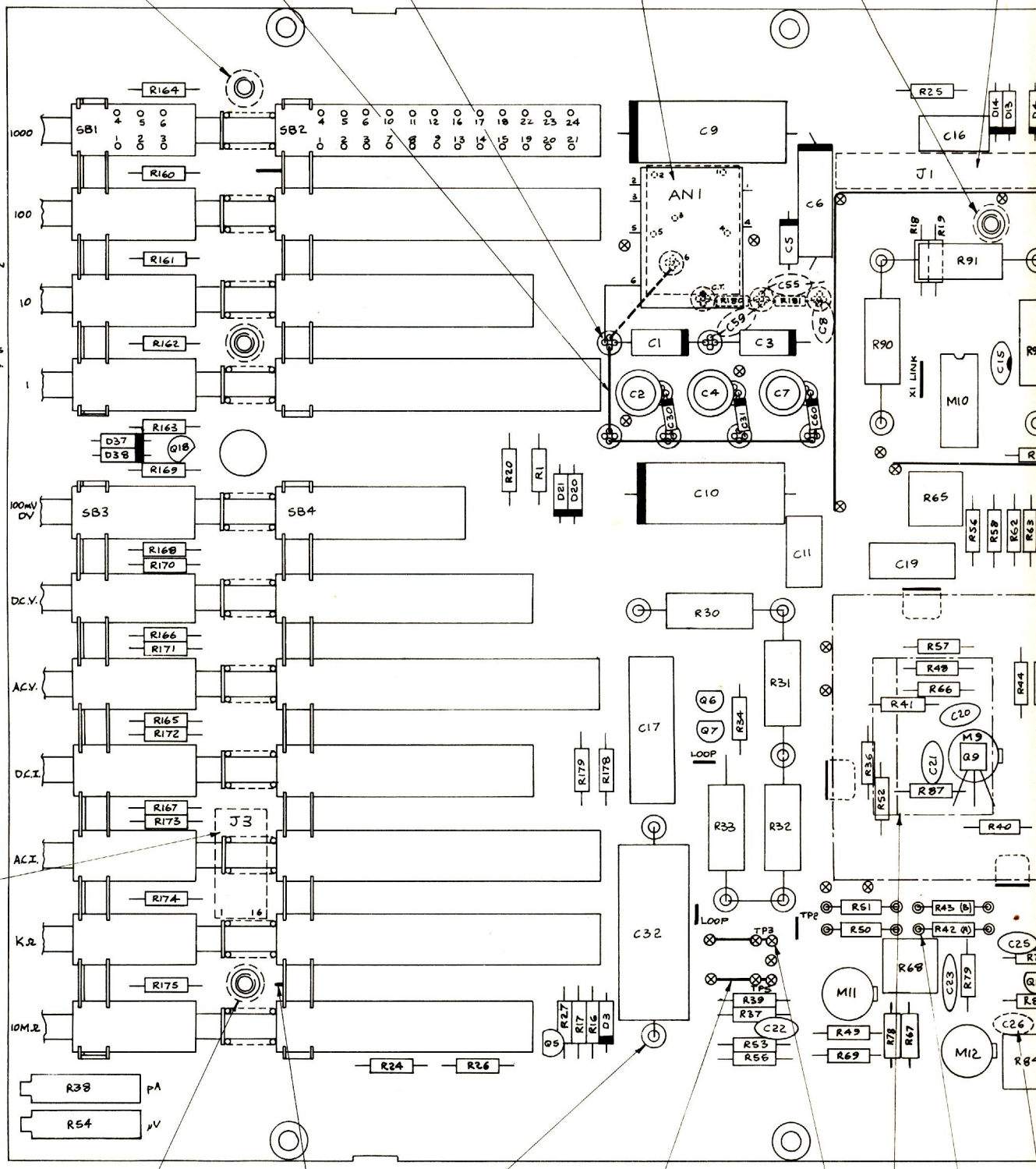

DRAWN	CHECKED	DIMENSIONS IN	TOLERANCES	MATERIAL
M.J.D.			INCH DIMENSIONS: DECIMAL TO 3 PLACES ± ·005; DECIMAL TO 2 PLACES ± ·010; FRACTIONAL ± 1/64; METRIC DIMENSIONS: DECIMAL TO 2 PLACES ± ·1mm; DECIMAL TO 1 PLACE ± ·2mm; WHOLE DIMENSIONS ± ·4mm; UNLESS OTHERWISE STATED; ANGULAR ± °	
TRACED	APPROVED	MILLIMETRES		FINISH
	L.A.D.	SCALE 2 : 1		
DATE 2.6.76	DATE 2.2.77	NOT TO BE SCALED		

4	5	6	7

ALL BURRS TO BE REMOVED

M3 X 6 STANDOFF FIT TO OTHER SIDE 612008

J1 FIT TO OTHER SIDE FIT 2LAYERS CREPE PAPER TAPE (630030) BETWEEN J1 AND P.C.B.

AC INPUT SHIELDS 450067 FIT 3mm ABOVE P.C.B.

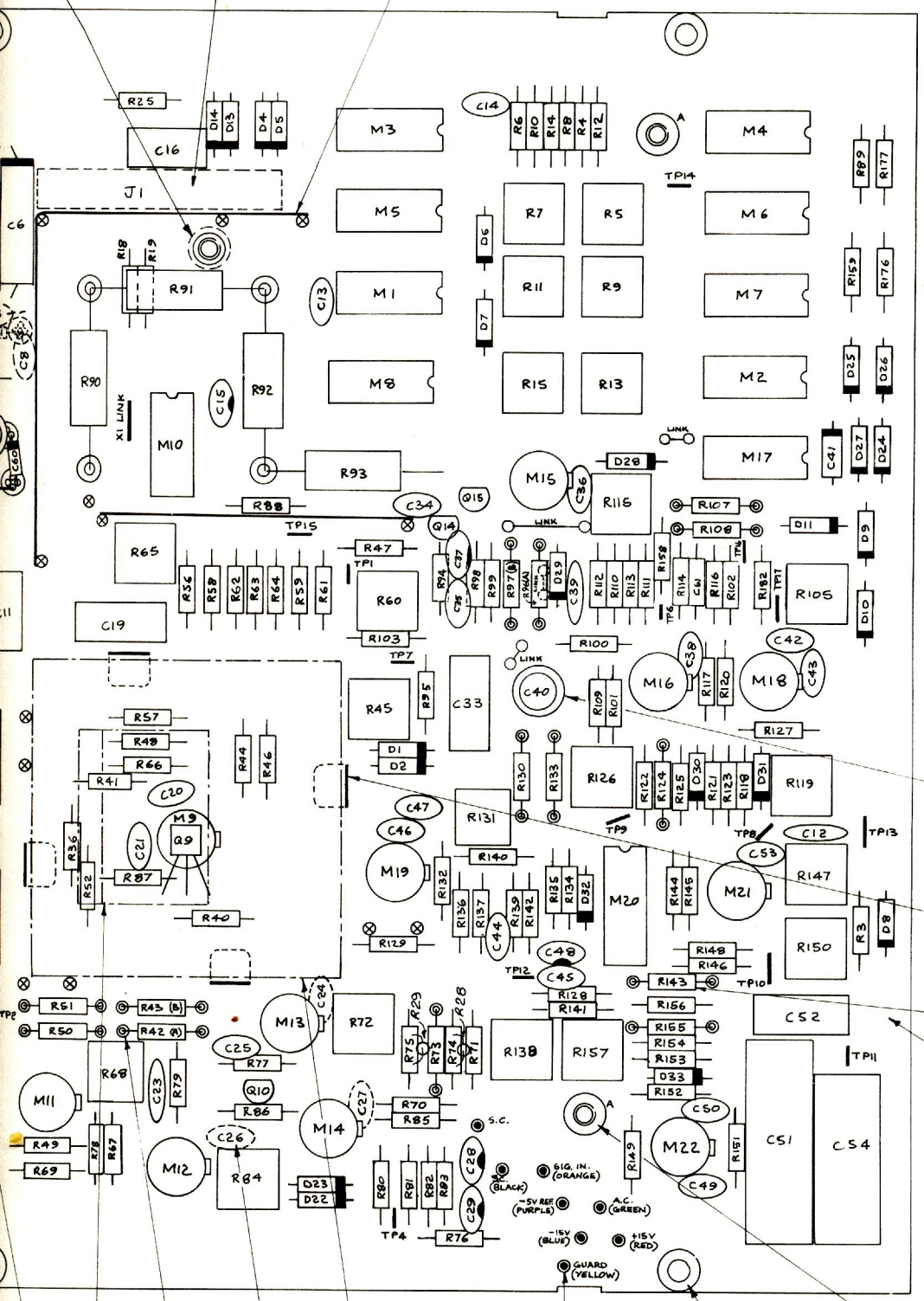

C40 FIT 1mm ABOVE P.C.B.

CLAMPING LOOPS SEE NOTE 5

R143 FIT ON ASSY. DO NOT SOLDER.

P.C. BOARD 410024-.

SOLDER TERM. 20003

28 OFF P.S.V. TERMINAL 602001

ENVIRONMENTAL SHIELD 450004

8 OFF SNAP CONNECTOR 601002

6 OFF Ø3·7X4 STANDOFF 614001

2 OFF M3 X 22 STANDOFF (A) 612005

CABLE CLIP 630023

C26, C24 & C27 ONLY FITTED WHEN M12, M13 & M14 ALTERNATIVE (TYPE 301) IS FITTED.

NOTES

1. FOR MOUNTING OF SWITCH BOARD ASSY 400097 SEE DRG. No 400112
2. TEST POINT LOOPS (TP1 ETC.) & X1 LINK ARE 22 SWG WIRE (540002), 8mm APPROX HIGH.
3. MOUNT M1-M8, M10 & M17 ON 7 WAY D.I.L. BUCKETS (602006) - 20 OFF AND D.I.L. SOCKET STRIP (602004) - 140 OFF SOLDER M20 INTO SOCKET STRIP (602004) - 16 OFF
4. FIT 11 OFF CHROME BUTTONS (700020) AS FINAL OP.
5. ENVIR. SHIELD CLAMPING LOOPS (540002) 4 OFF, FIT 5-6 mm ABOVE P.C.B.

6. UPPER GUARD SHIELD (450064) FIXED WITH 4 OFF POSIPAN SCREW M3 X 6 (611004) AND 4 OFF M3 SHAKEPROOF (613005)
   LOWER GUARD SHIELD (450063) FIXED WITH 1 OFF POSIPAN SCREW M3 X 6 (611004), 2 OFF POSIPAN SCREW M3 X 10 (611006) AND 3 OFF SHAKEPROOF M3 (613005).
7. R28 & R29 TO BE SITUATED IN SPARE PADS FOR R74 & R75
8. TAPE (630041) FITTED AS SHOWN ON DRG 450064, ON ASSEMBLY TO UPPER GUARD SHIELD.

ISS.	CHANGES
11	ECO 216. REDRAWN TO 156.5 ARTWORK. M.J.D. 8.6.76
12	ECO 223 C1&C3 WERE 22µF M.J.D. 24.6.76.
13	ECO 224 PT. LT. CHANGES PJH 24-8-76
14	ECO 231 C61 ADDED ACROSS R114 PJH 31-8-76
15	ECO 259. 11.11.76 PJH ANI ALT. WAS 090006
16	ECO 345 STAND OFF NEAR '1000' SWITCH REMOVE 26.11.76 PJH
17	ECO 341 P.C.B. and PTS. LTS. Changes. PJH 28.11.76
18	ECO 356. R29, R28, Q4, Q8 R35, C18 AND D19 REMOVED 1.12.76 PJH
19	ECO 372. 4-2-77. LS R28 & R29 ADDED. PARTS LIST MOD.
20	ECO 370. 4-2-77. LS NOTE 8 ADDED
21	ECO 338 16.3.77 PT. LT. CHANGES. PJH
22	ECO 410 30.3.77 PT. LT. CHANGES PJH
23	ECO 430 4-4-77 M3X6 STANDOFF ADDED NEAR '1000' SW. (U/SIDE OF BOARD)

ANGULAR ± °	MATERIAL	datron ELECTRONICS LTD. NORWICH.	DRAWING SIZE A1
ONS TO 3 PLACES ± .005; TO 2 PLACES ± .010; AL ± 1/64	FINISH	TITLE ANALOGUE P.C.B. ASSY. 1059	DRAWING No. 400096
IONS TO 2 PLACES ± ·1mm; TO 1 PLACE ± ·2mm; IMENSIONS ± ·4mm; WISE STATED			SHEET 1 OF 15

DRAWING No.
400112
FIRST USED ON 1059

THIRD ANGLE PROJECTION

DRAWN IN ACCORDANCE WITH BS 308

NOTE. OUTPUT LEADS FROM SWITCH BOARD TO ATTENUATOR, C2 & C4 TO BE POSITIONED WITH A MINIMUM OF 5mm CLEARANCE BETWEEN EACH LEAD AND TRIMMER C2.

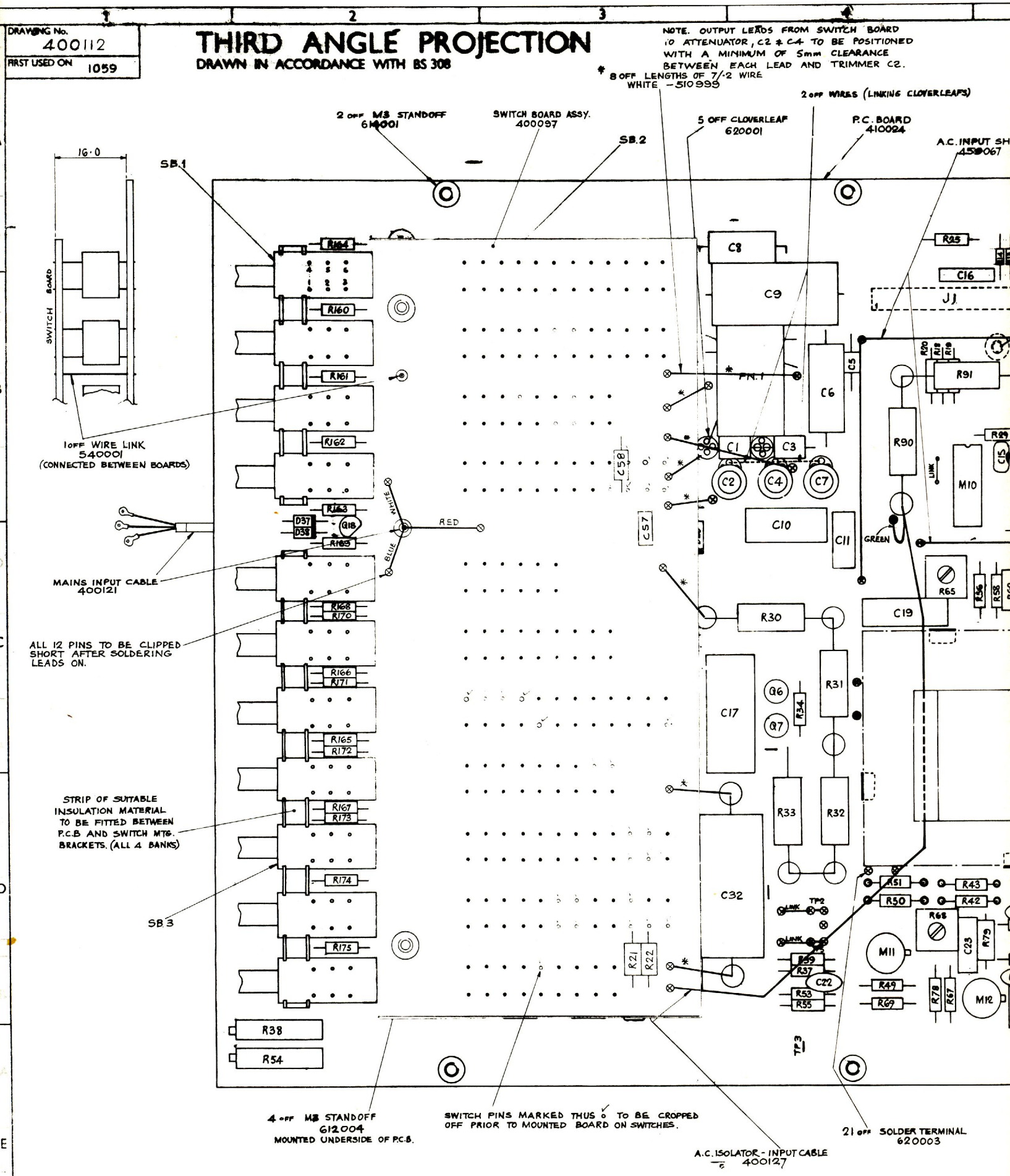

DRAWN	CHECKED	DIMENSIONS IN	TOLERANCES ANGULAR ±°	MATERIAL
I.V.	D.C.S.	MILLIMETRES	INCH DIMENSIONS: DECIMAL TO 3 PLACES ± .005; DECIMAL TO 2 PLACES ± .010; FRACTIONAL ± 1/64	
TRACED	APPROVED L.A.D.	SCALE 2:1	METRIC DIMENSIONS: DECIMAL TO 2 PLACES ± 1mm; DECIMAL TO 1 PLACE ± 2mm; WHOLE DIMENSIONS ± 4mm	FINISH
DATE 4/12/75	DATE 2.2.77	NOT TO BE SCALED	UNLESS OTHERWISE STATED	

4	5	6	7

ITCH BOARD
BE POSITIONED
CLEARANCE
TRIMMER C2.

WIRES (LINKING CLOVERLEAFS)

ALL BURRS TO BE REMOVED

NOTES

1. FOR MOUNTING OF SWITCH BOARD ASSY. 400087 TO ANALOGUE P.C.B., SEE DRG 400114.
2. TEST POINT LOOPS (T.P1 etc) MADE FROM 24 SWG. B.T.C. WIRE (540001) CUT TO SUIT.
3. THE FOLLOWING I.C's TO BE MOUNTED ON -WAY D.I.L. BUCKETS 602008 WITH SOCKET 605012:- M3-M8, M10

   M20 IS MOUNTED AND SOLDERED INTO SOCKET 605002 ONLY. M1, M2, M10 AND M17 TO BE MOUNTED ON 605
4. FIT 11 OFF CHROME BUTTONS 700020 AS FINAL OP.
5. FIT J1 AND J3 ON UNDERSIDE OF P.C.B.
6. BEFORE FITTING SWITCH BANKS SB1 & SB3, FIRST REMOVE ALL 11 SPRINGS FROM SPINDLE ENDS. SECONDLY, REMOVE SPRING FROM END OF LATCH BAR ON SWITCH BANKS SB2 AND SB4.
7. AC INPUT SHIELD TO BE MOUNTED APPROX 3·0mm CLEAR OF TRACK.

No.	CHANGES
1	RELEASED TO PRODUCTION 12/1/76
2	ECO 176 DESIGN MODS M.J.D. 19.2.76
3	ECO 175 NOTE ADDED M.J.D. 2.3.76
4	ECO 178 PT. LT. CHANGE M.J.D. 9.3.76
5	ECO 188 PT. LT. CHANGE M.J.D. 30.3.76
6	ECO 208 PT. LT. CHANGE M.J.D. 7.6.76
7	ECO 210 PT. LT. CHANGE M.J.D. 7.6.76
8	ECO 216 PT. LT. CHANGE M.J.D. 7.6.76
9	ECO 223 PT. LT. CHANGE M.J.D. 24.6.76
10	ECO 224 PT. LT. CHANGE PJH 28.6.76
11	ECO 231 PT. LT. CHANGE PJH 31.9.76
12	ECO 259 PT. LT. CHANGE PJH 11.11.76
13	ECO 345 PT. LT. CHANGE PJH 29.11.76
14	ECO 341 PT. LT. CHANGE PJH 29.11.76
15	ECO 356 PT. LT. CHANGE PJH 30.11.76
16	ECO 372 PT. LT. CHANGE PJH 16.3.77
17	ECO 370 PT. LT. CHANGE PJH 16.3.77
18	ECO 338 PT. LT. CHANGE PJH 16.3.77
19	ECO 410 PT. LT. CHANGE PJH 30.3.77
20	ECO 430 PT. LT. CHANGE 4.4.77

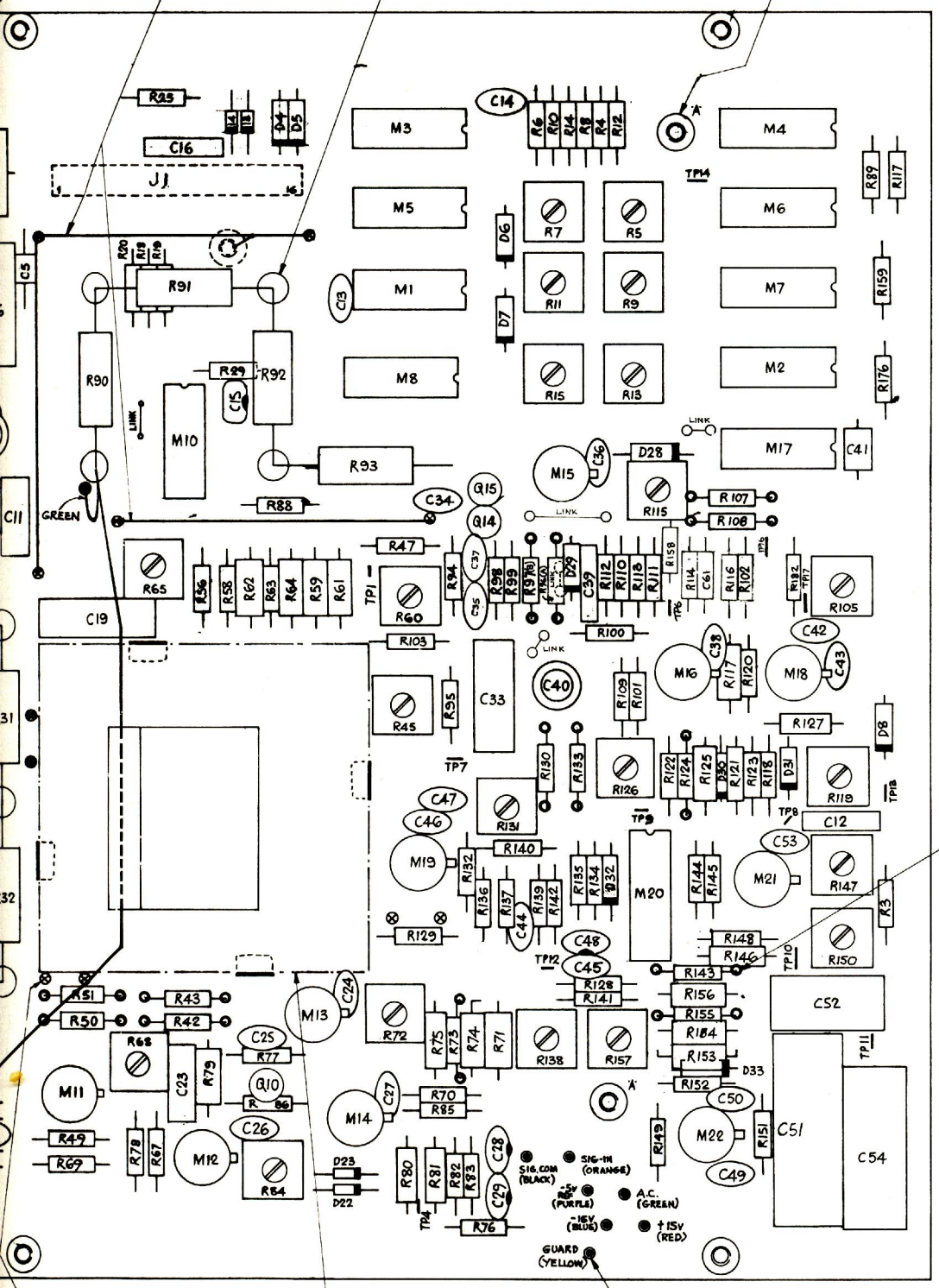

ANGULAR ±½°	MATERIAL	datron ELECTRONICS LTD. NORWICH.	DRAWING SIZE
ONS TO 3 PLACES ± .005 TO 2 PLACES ± .010 NAL ± 1/64 SIONS TO 2 PLACES ± 1mm TO 1 PLACE ± 2mm DIMENSIONS ± ·4mm RWISE STATED	FINISH	TITLE 1059 - ANALOGUE BOARD SUB-ASSY.	A1
		DRAWING No. 400112	SHEET 1 OF 2

1	2	3	4

DRAWING No. 400117

FIRST USED ON 1059

THIRD ANGLE PROJECTION

DRAWN IN ACCORDANCE WITH BS 308

ALL BURRS TO B

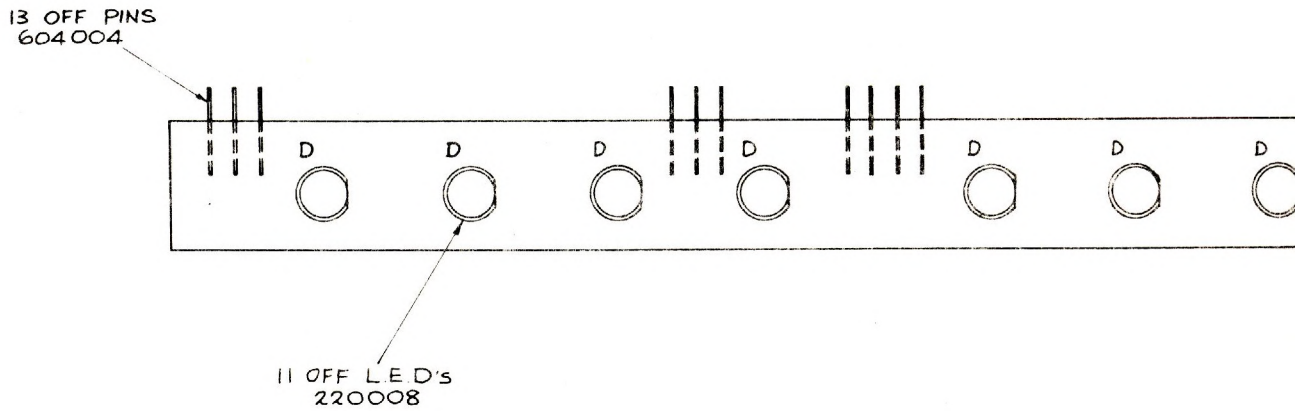

DRAWN I/	CHECKED	DIMENSIONS IN MILLIMETRES	TOLERANCES ANGULAR ± ½° INCH DIMENSIONS DECIMAL TO 3 PLACES ± .005 DECIMAL TO 2 PLACES ± .010 FRACTIONAL ± 1/64 METRIC DIMENSIONS DECIMAL TO 2 PLACES ± 1mm DECIMAL TO 1 PLACE ± 2mm WHOLE DIMENSIONS ± 4mm UNLESS OTHERWISE STATED	MATERIAL /	dat
TRACED	APPROVED L.A.D.	SCALE 2:1		FINISH /	TITLE 105
DATE 26/8/75	DATE 2.2.77	NOT TO BE SCALED			

J W 1162

4	5	6
ALL BURRS TO BE REMOVED		NOTES

1. L.E.D's TO BE MOUNTED WITH THEIR BASES SEATING ON P.C.B.

ISS.	CHANGES
1	RELEASED TO PROD. IV 18/1/76

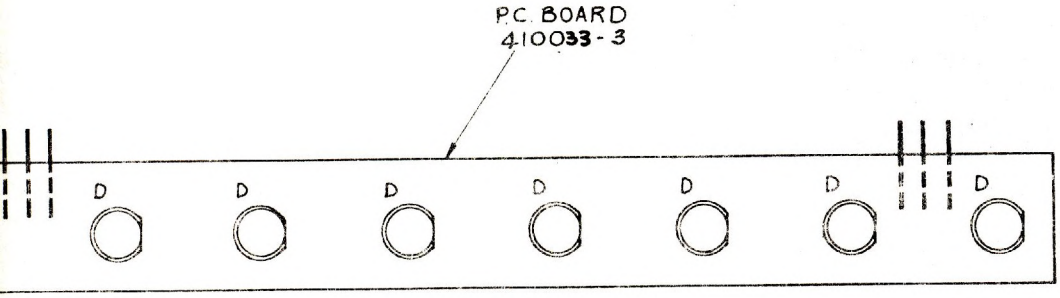

datron ELECTRONICS LTD. NORWICH.

DRAWING SIZE A2

TITLE 1059 – L.E.D. PRINTED CIRCUIT BOARD ASSY.

DRAWING No. 400117

SHEET 1 OF 2

DRAWING No.	
400097	
FIRST USED ON	1059

THIRD ANGLE PROJECTION

DRAWN IN ACCORDANCE WITH BS 308

ALL BURRS TO

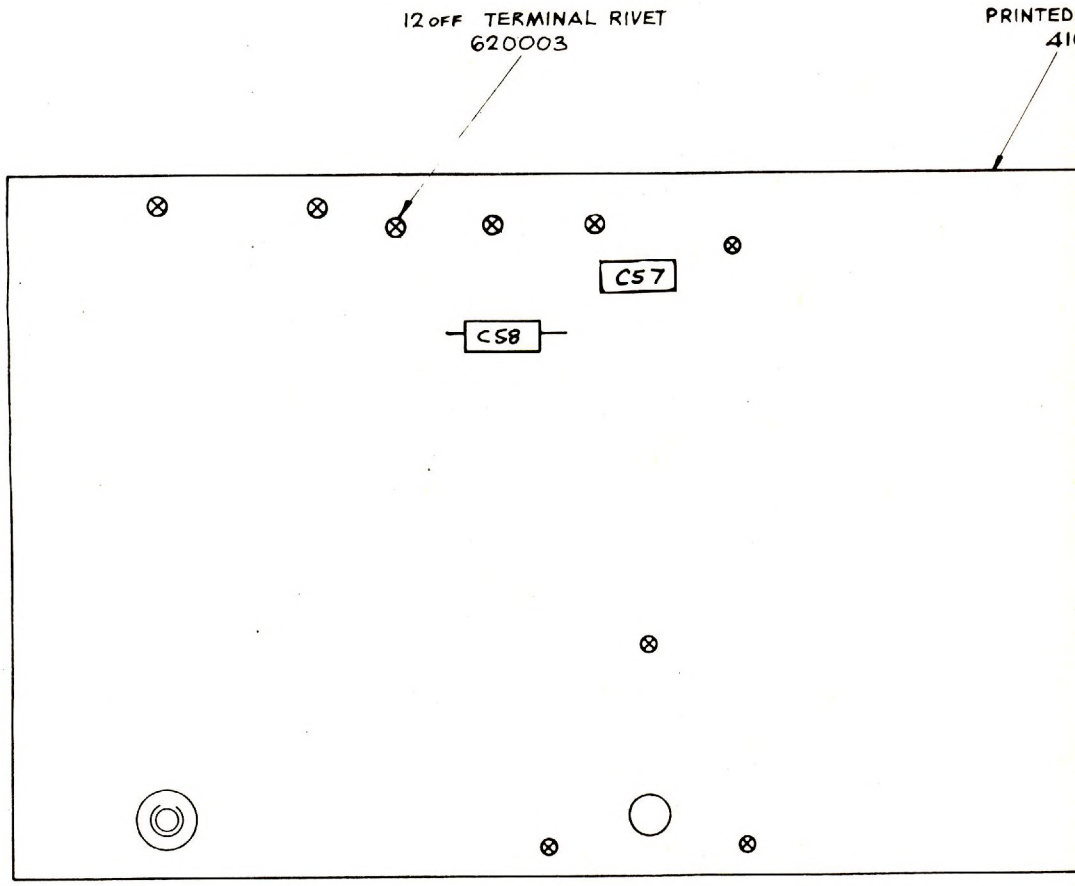

DRAWN IV	CHECKED	DIMENSIONS IN MILLIMETRES	TOLERANCES ANGULAR ± ½° INCH DIMENSIONS DECIMAL TO 3 PLACES ± .005 DECIMAL TO 2 PLACES ± .010 FRACTIONAL ± 1/64 METRIC DIMENSIONS DECIMAL TO 2 PLACES ± 1mm DECIMAL TO 1 PLACE ± 2mm WHOLE DIMENSIONS ∓ 4mm UNLESS OTHERWISE STATED	MATERIAL	
TRACED	APPROVED	SCALE 2:1		FINISH	TITLE 10 10
DATE 2.12.75	DATE 2.2.77	NOT TO BE SCALED			

J.W.11.2

4	5	6
ALL BURRS TO BE REMOVED		NOTES

ISS.	CHANGES
1	RELEASED TO PROD^N 12/1/76
3	ECO 164 BROUGHT IN LINE WITH 156.6 ARTWORK. M.J.O. 13.2.76.
2	ECO 163 CUT TRACK ON 156.5 BOARDS M.J.O. 26.2.76.
4	ECO 339. 2-2-77 APP/LIST MOD. LB

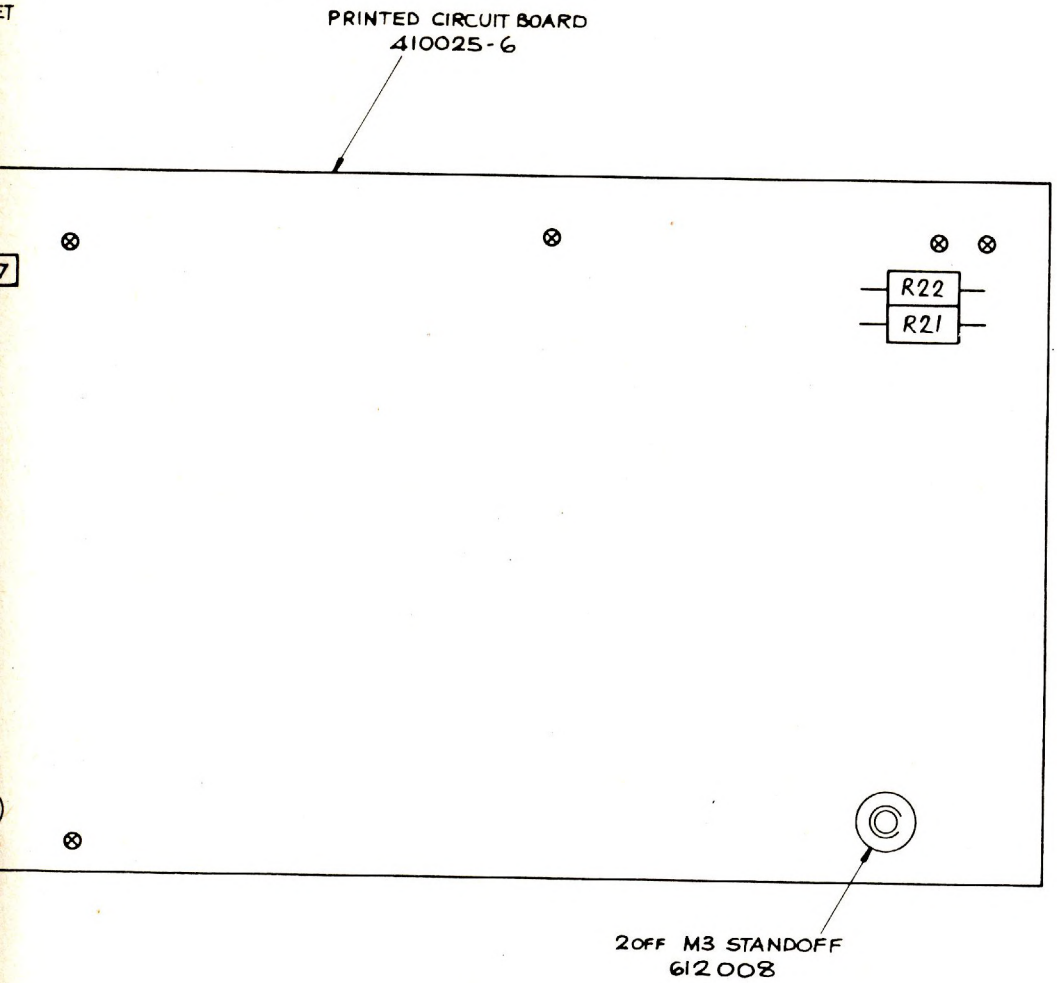

datron ELECTRONICS LTD. NORWICH.

DRAWING SIZE A2

TITLE 1057 1059 SWITCH BOARD ASSY.

DRAWING No. 400097

SHEET 1 OF 2

DRAWING No. 430023

FIRST USED ON 1059

THIRD ANGLE PROJECTION

DRAWN IN ACCORDANCE WITH BS 308

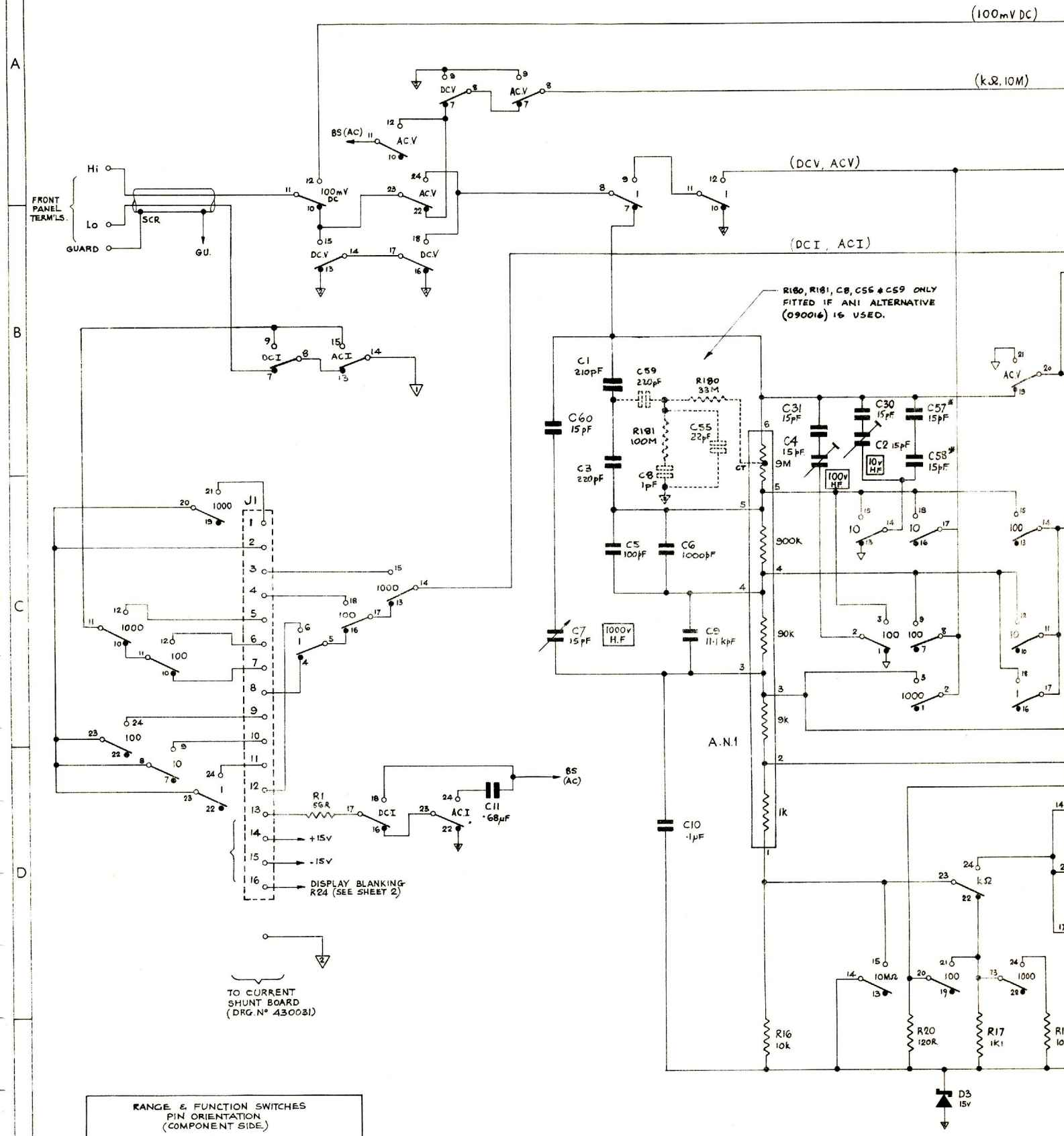

RANGE & FUNCTION SWITCHES PIN ORIENTATION (COMPONENT SIDE)

	4	5	6	10	11	12	16	17	18	22	23	24
FRONT	1	2	3	7	8	9	13	14	15	19	20	21

DRAWN IV	CHECKED	DIMENSIONS IN	TOLERANCES ANGULAR ± ° INCH DIMENSIONS DECIMAL TO 3 PLACES ± ·005 DECIMAL TO 2 PLACES ± ·010 FRACTIONAL ± 1/64 METRIC DIMENSIONS DECIMAL TO 2 PLACES ± ·1mm DECIMAL TO 1 PLACE ± ·2mm WHOLE DIMENSIONS ± ·4mm UNLESS OTHERWISE STATED	MAT
TRACED	APPROVED L.A.B.	MILLIMETRES		FIN
DATE 9/12/75	DATE 2.2.77	SCALE / NOT TO BE SCALED		

J.W.'76

4	5	6	7

ALL BURRS TO BE REMOVED

NOTES

* MOUNTED ON SWITCH BOARD 400097.

ISS.	CHANGES
1	RELEASED TO PRODN IL. 12.1.76.
2	ECO 144 DESIGN MODS IV 2.2.76
3	ECO 208 R10 WAS 1K2 R11 WAS 2K. R180, R181, C8, C55 & C59 ADDED. M.J.D. 3.6.76.
4	ECO 216 SWITCHES ADDED – DCI 7,8,9 & ACI 13,14,15. M.J.D. 3.6.76
11	ECO 338, C30, 31 & 60 WERE 27pF. 16.3.77 FOH SHT 1

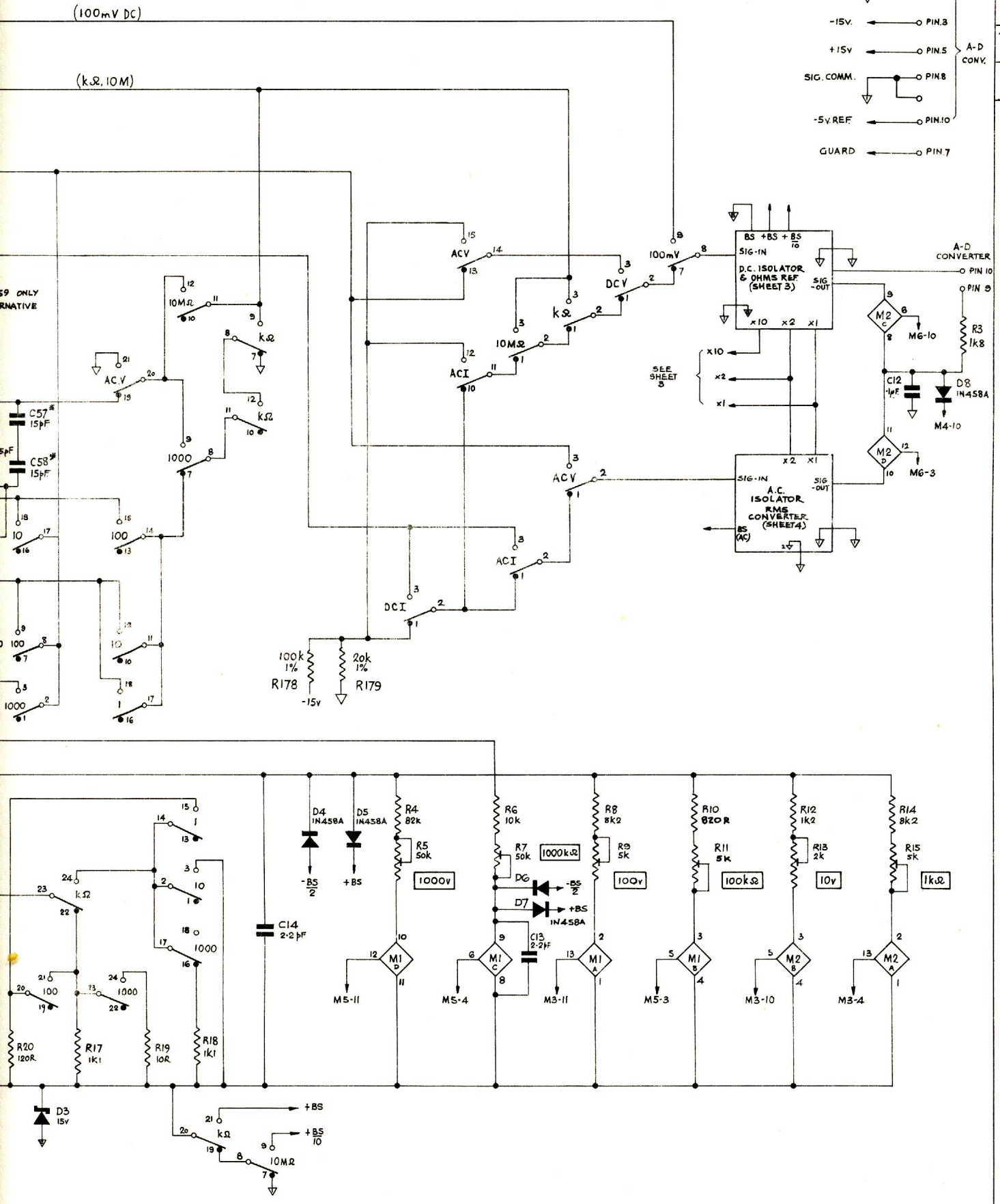

ANGULAR ± ·°	MATERIAL	datron ELECTRONICS LTD. NORWICH.	DRAWING SIZE A1
FINISH		TITLE 1059 ANALOGUE INPUT ATTENUATOR - FUNCTION & RANGE SWITCHING	DRAWING No. 430023 / SHEET 1 OF 5

DRAWING No. 430023

FIRST USED ON 1059

THIRD ANGLE PROJECTION

DRAWN IN ACCORDANCE WITH BS 308

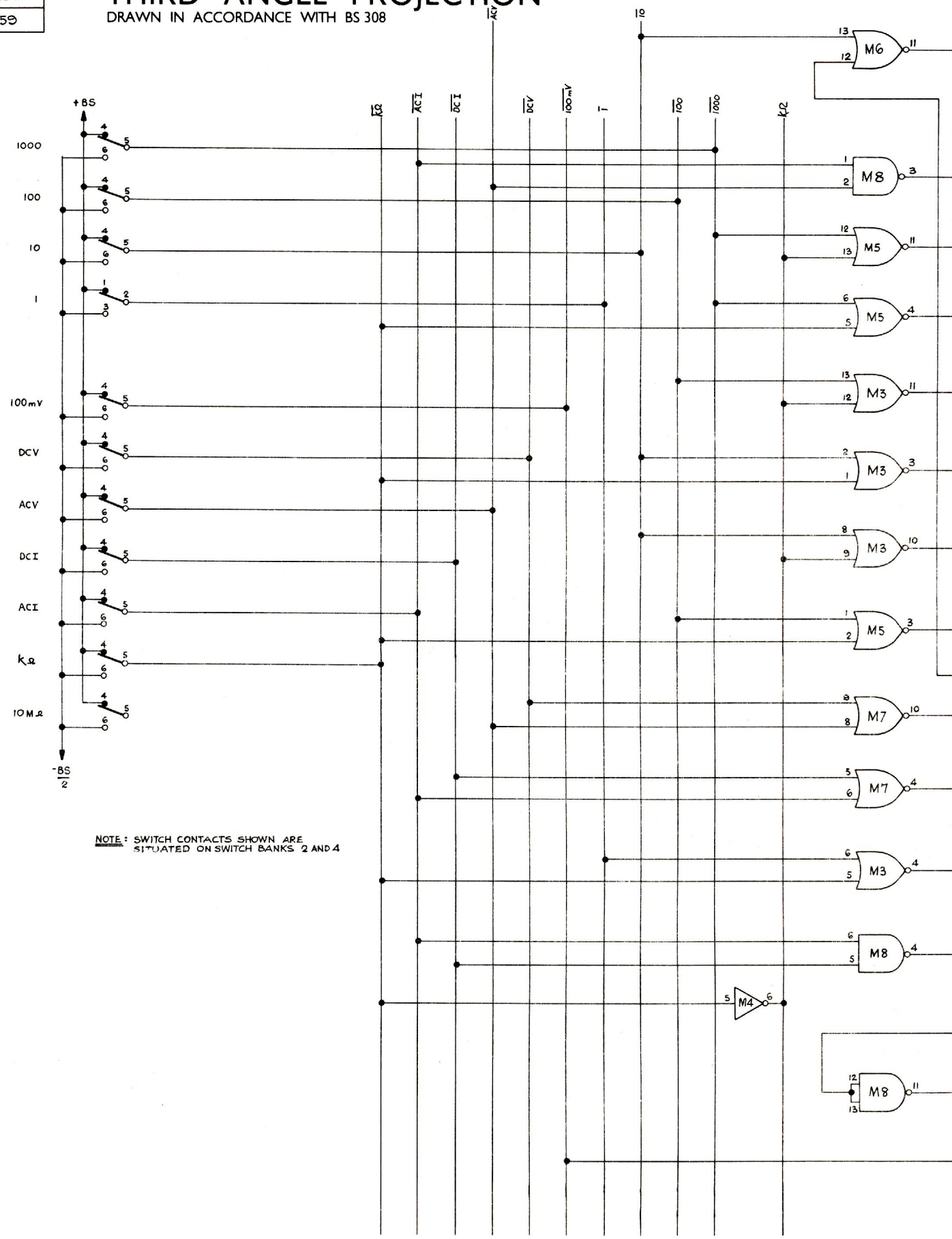

NOTE: SWITCH CONTACTS SHOWN ARE SITUATED ON SWITCH BANKS 2 AND 4

DRAWN	CHECKED	DIMENSIONS IN	TOLERANCES ANGULAR ± °	MATE
IV	DCJ		INCH DIMENSIONS DECIMAL TO 3 PLACES ± .005; DECIMAL TO 2 PLACES ± .010; FRACTIONAL ± 1/64	
TRACED	APPROVED	MILLIMETRES	METRIC DIMENSIONS DECIMAL TO 2 PLACES ± 1mm; DECIMAL TO 1 PLACE ± 2mm; WHOLE DIMENSIONS ± 4mm	FINIS
	L.A.D.	SCALE /	UNLESS OTHERWISE STATED	
DATE 25/9/75	DATE 2.2.77	NOT TO BE SCALED		

J.W.1161

4	5	6	7

ALL BURRS TO BE REMOVED

NOTES

1. FOR QUAD BILATERAL SWITCHES:
   M1, M2 SEE SHT. 1
   M10 SEE SHT. 3
   M17 SEE SHT. 4

2. POWER SUPPLIES:
   M3-M8. PIN 7 -BS/2 (-5v W.R.T. BS)
   PIN 14 +BS (+10v W.R.T. BS)

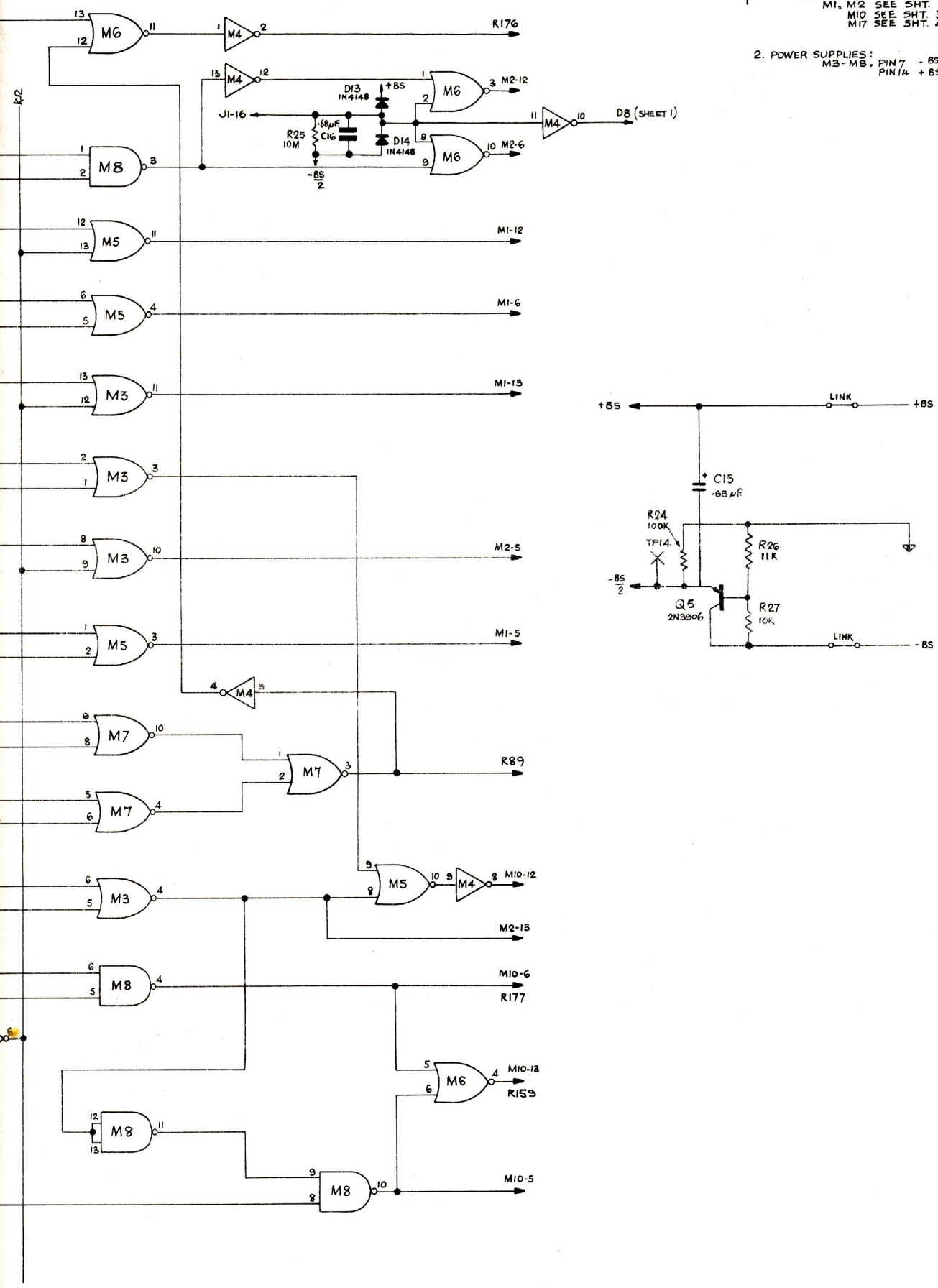

ISS.	CHANGES
1	RELEASED TO PRODUCT IV. 12/1/
2	ECO 144 C59 REMOVED IV 2/2/
3	ECO 356 R28, R29 AND Q4 REMOVED. PDH
11	SEE SHT 1

ERANCES ANGULAR ± °	MATERIAL	datron ELECTRONICS LTD. NORWICH.	DRAWING SIZE A1
H DIMENSIONS DECIMAL TO 3 PLACES ± ·005 DECIMAL TO 2 PLACES ± ·010 FRACTIONAL ± 1/64	FINISH	TITLE 1059 ANALOGUE – RANGE CODING	DRAWING No. 430023
RIC DIMENSIONS DECIMAL TO 2 PLACES ± 1mm DECIMAL TO 1 PLACE ± 2mm WHOLE DIMENSIONS ± 4mm			SHE 2 OF
LESS OTHERWISE STATED			

DRAWING No.	
430023	
FIRST USED ON	1059

THIRD ANGLE PROJECTION

DRAWN IN ACCORDANCE WITH BS 308

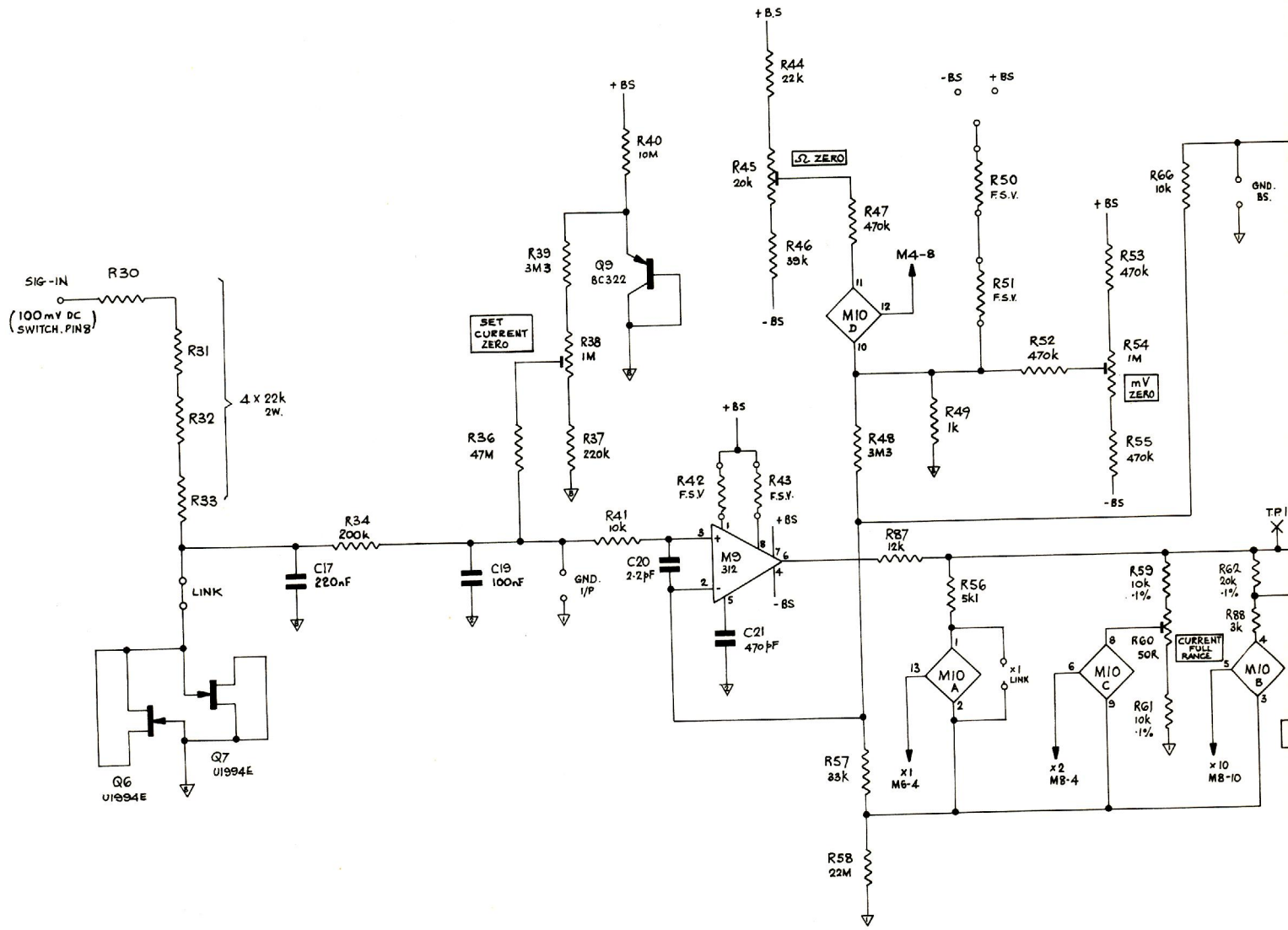

DRAWN	CHECKED	DIMENSIONS IN	TOLERANCES	MAT
IV	DCJ	MILLIMETRES	INCH DIMENSIONS: DECIMAL TO 3 PLACES ± ·005; DECIMAL TO 2 PLACES ± ·010; FRACTIONAL ± 1/64; METRIC DIMENSIONS: DECIMAL TO 2 PLACES ± 1mm; DECIMAL TO 1 PLACE ± 2mm; WHOLE DIMENSIONS ± 4mm; UNLESS OTHERWISE STATED; ANGULAR ± °	
TRACED	APPROVED	SCALE 2:1		FINIS
DATE 12.12.75	DATE 2.2.77	NOT TO BE SCALED		

J.W.116

4	5	6	7

ALL BURRS TO BE REMOVED

NOTES

SIGNAL COMMON = 1

BOOTSTRAPPED SUPPLY (DC) = 8

ANALOGUE COMMON = 2

M10 IS A QUAD BILATERAL SWITCH CD 4016

+ V_{DD} (PIN 14) = BS

− V_{SS} (PIN 7) = $\frac{BS}{2}$

C FITTED IF 301 REPLACE 741

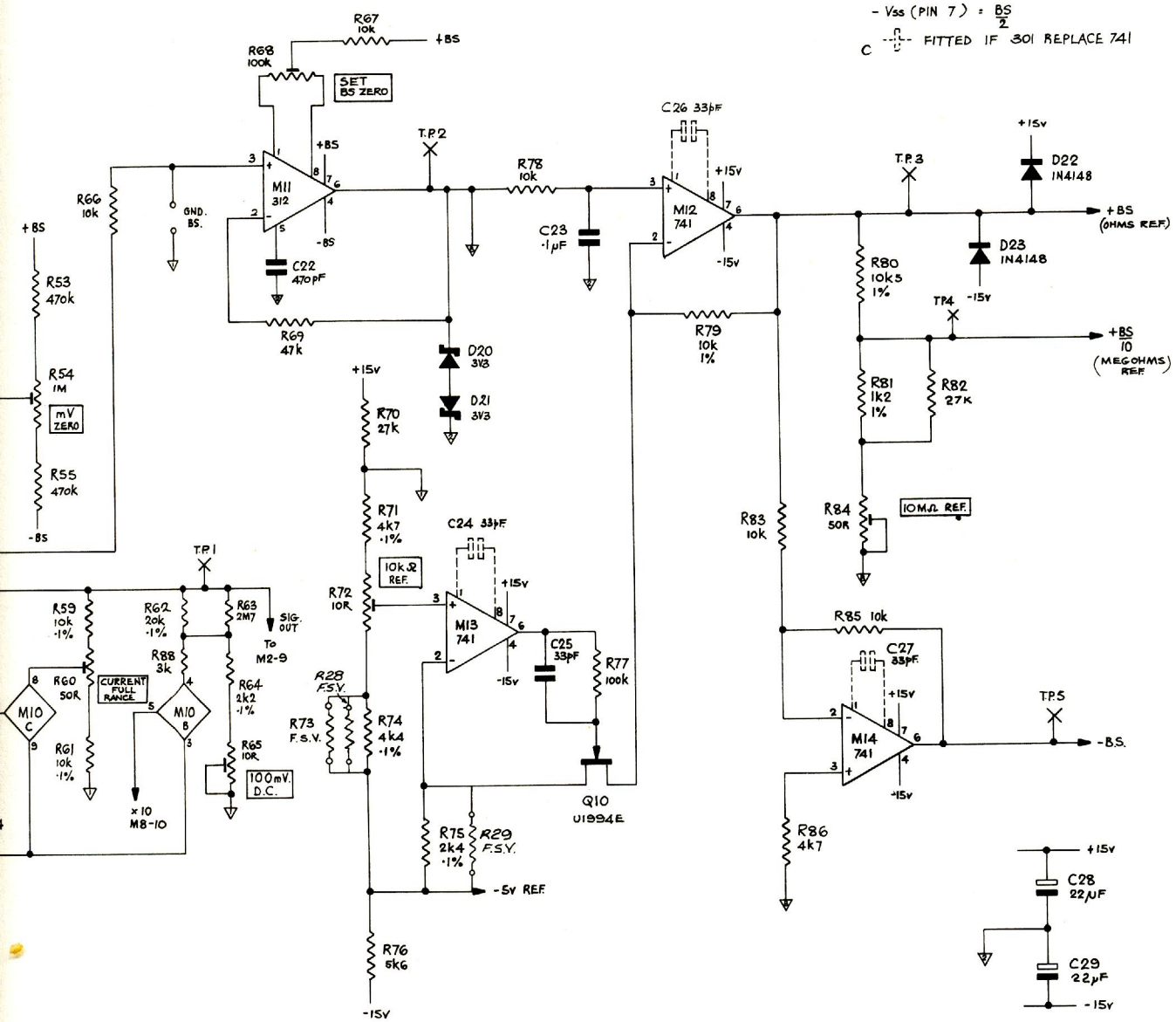

ISS.	CHANGES
1	RELEASED TO PRODUCTION IV 12/1/76
2	ECO 144 DESIGN MODS. IV 30.1.76
3	ECO167 R82 WAS 33K M.J.D. 27.2.76
4	ECO 208 R35 WAS 3K3 M.J.D. 2.5.76
5	ECO 256 D19, R35, Q18 AND C18 REMOVED PJH 1.12.76
6	ECO 372. 4-2-77 LB. R28 + R29 ADDED.
11	SEE SHT 1

ANGULAR ±0.0	MATERIAL	datron ELECTRONICS LTD. NORWICH.	DRAWING SIZE A1
	FINISH	TITLE 1059 ANALOGUE - D.C. ISOLATOR & OHMS REF	DRAWING No. 430023 / SHEET 3 OF 5

CES
ENSIONS
MAL TO 3 PLACES ± ·005
MAL TO 2 PLACES ± ·010
CTIONAL ± 1/64
MENSIONS
MAL TO 2 PLACES ± 1mm
MAL TO 1 PLACE ± 2mm
OLE DIMENSIONS ± 4mm
THERWISE STATED

DRAWING No. 430023

FIRST USED ON 1059

THIRD ANGLE PROJECTION

DRAWN IN ACCORDANCE WITH BS 308

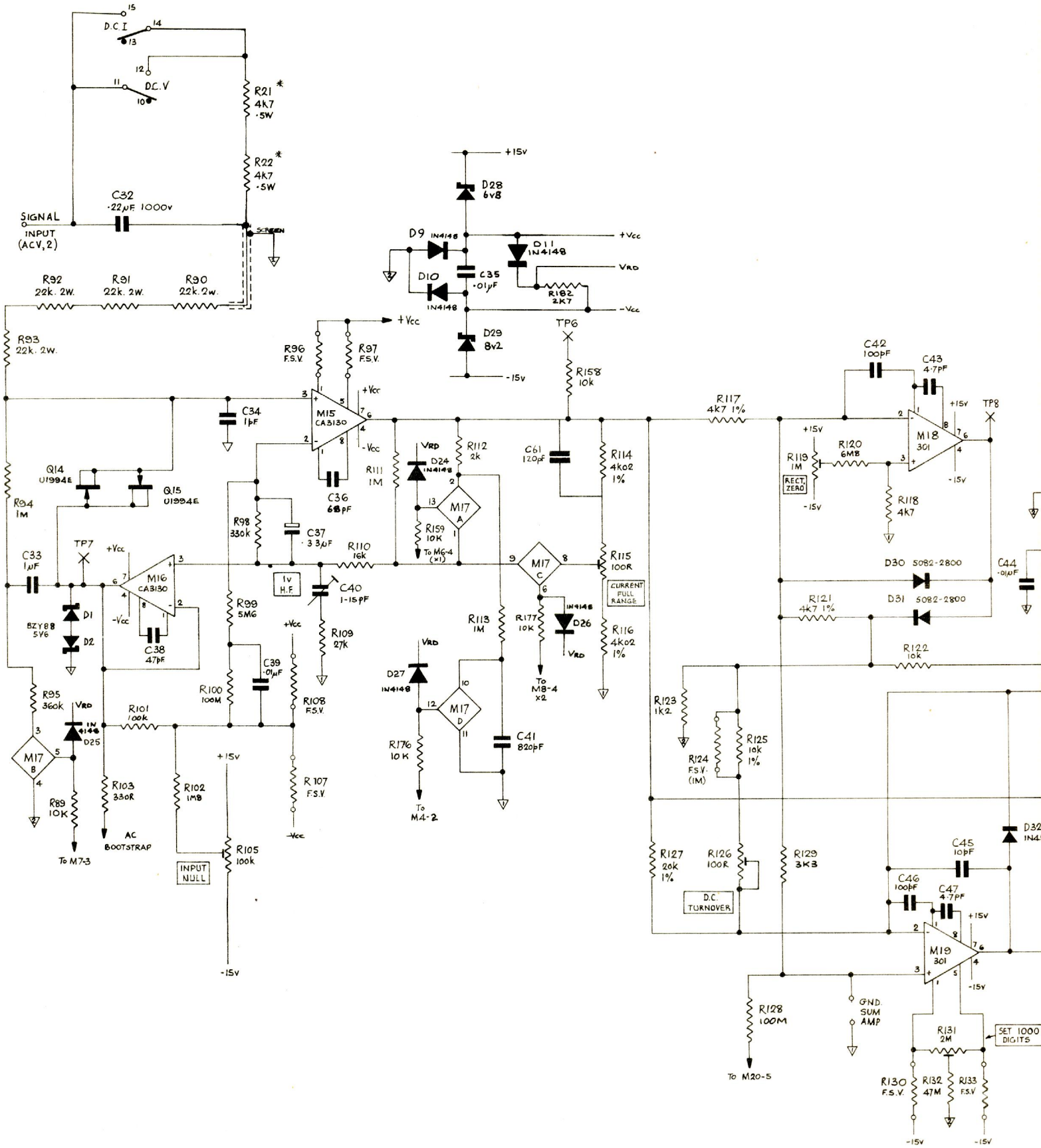

DRAWN	CHECKED	DIMENSIONS IN	TOLERANCES	MATERIAL
IV.	DCJ	MILLIMETRES	ANGULAR ± .° INCH DIMENSIONS: DECIMAL TO 3 PLACES ± .005; DECIMAL TO 2 PLACES ± .010; FRACTIONAL ± 1/64; METRIC DIMENSIONS: DECIMAL TO 2 PLACES ± 1mm; DECIMAL TO 1 PLACE ± 2mm; WHOLE DIMENSIONS ± 4mm; UNLESS OTHERWISE STATED	
TRACED	APPROVED	SCALE		FINISH
	L.A.D.	2:1		
DATE 16.12.75	DATE 2.2.77	NOT TO BE SCALED		

ALL BURRS TO BE REMOVED

NOTES

SIGNAL COMMON = ⏚

ANALOGUE COMMON = ⏚

M17 IS A QUAD BILATERAL SWITCH CD4066

+VDD (PIN 14) = +7·5V = +Vcc

-Vss (PIN 7) = -7·5V = -Vcc

* MOUNTED ON SWITCH BOARD 400097.

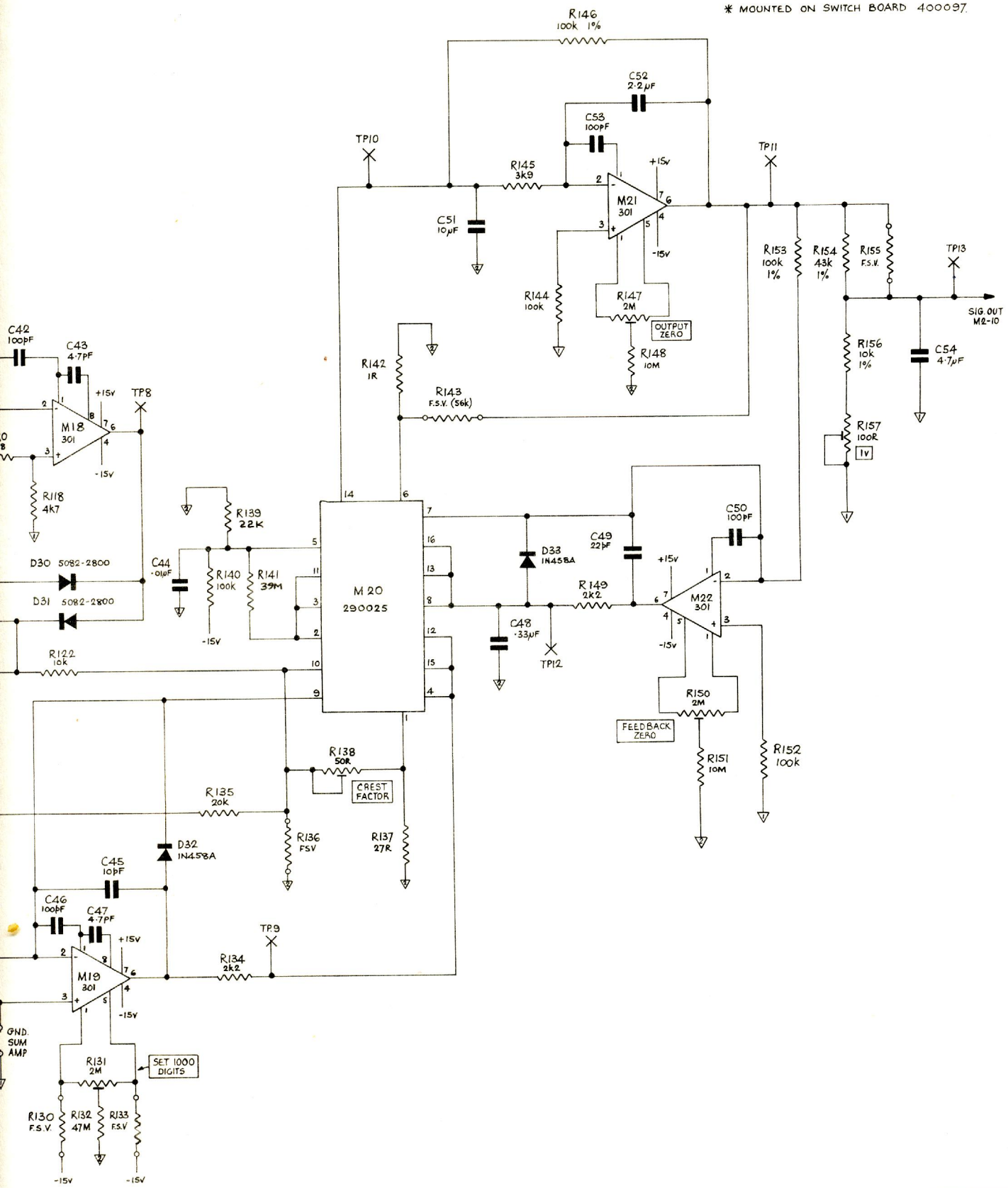

ISS.	CHANGES
2	RELEASED TO PROD. E.C.0139 12.1.76
3	ECO 144 DESIGN MODS. 2.2.76
4	ECO178. D24-27 ADDED R89,159,176,177 WERE 10M. M.J.D. 9.3.76.
5	ECO188. D9&D10 ADDED. M.J.D. 30.3.76
6	ECO 210 R129 WAS 6K8 R139 WAS 10K, R128 WAS 33M, R141 WAS 33M. C36 WAS 47pF. M.J.D. 3.6.76.
7	ECO 216 D11,E102 ADDED D24-27 WERE HG5009 CATHODES TO +Vcc. M.J.D. 3.6.76.
8	ECO 224 D28 was 7v5 D29 was 7v5 PJH 24-8-76
9	ECO231 PJH 1-9-76 C61 ADDED
10	ECO 341 R104, R106 removed. R102 was 100k R101 was 10k. 29.11.76 PJH
11	SEE SHT 1

CES ANGULAR ± ½°	MATERIAL	datron ELECTRONICS LTD. NORWICH.	DRAWING SIZE A1
ENSIONS			
IMAL TO 3 PLACES ± ·005			
IMAL TO 2 PLACES ± ·010			
CTIONAL ± 1/64			
IMENSIONS			
IMAL TO 2 PLACES ± 1mm			
IMAL TO 1 PLACE ± 2mm			
OLE DIMENSIONS ± 4mm			
OTHERWISE STATED	FINISH	TITLE 1059- ANALOGUE - A.C. ISOLATOR RMS. CONVERTER	DRAWING No. 430023 / SHEET 4 OF 5

DRAWING No. 430023

FIRST USED ON 1059

THIRD ANGLE PROJECTION

DRAWN IN ACCORDANCE WITH BS 308

ALL BURRS

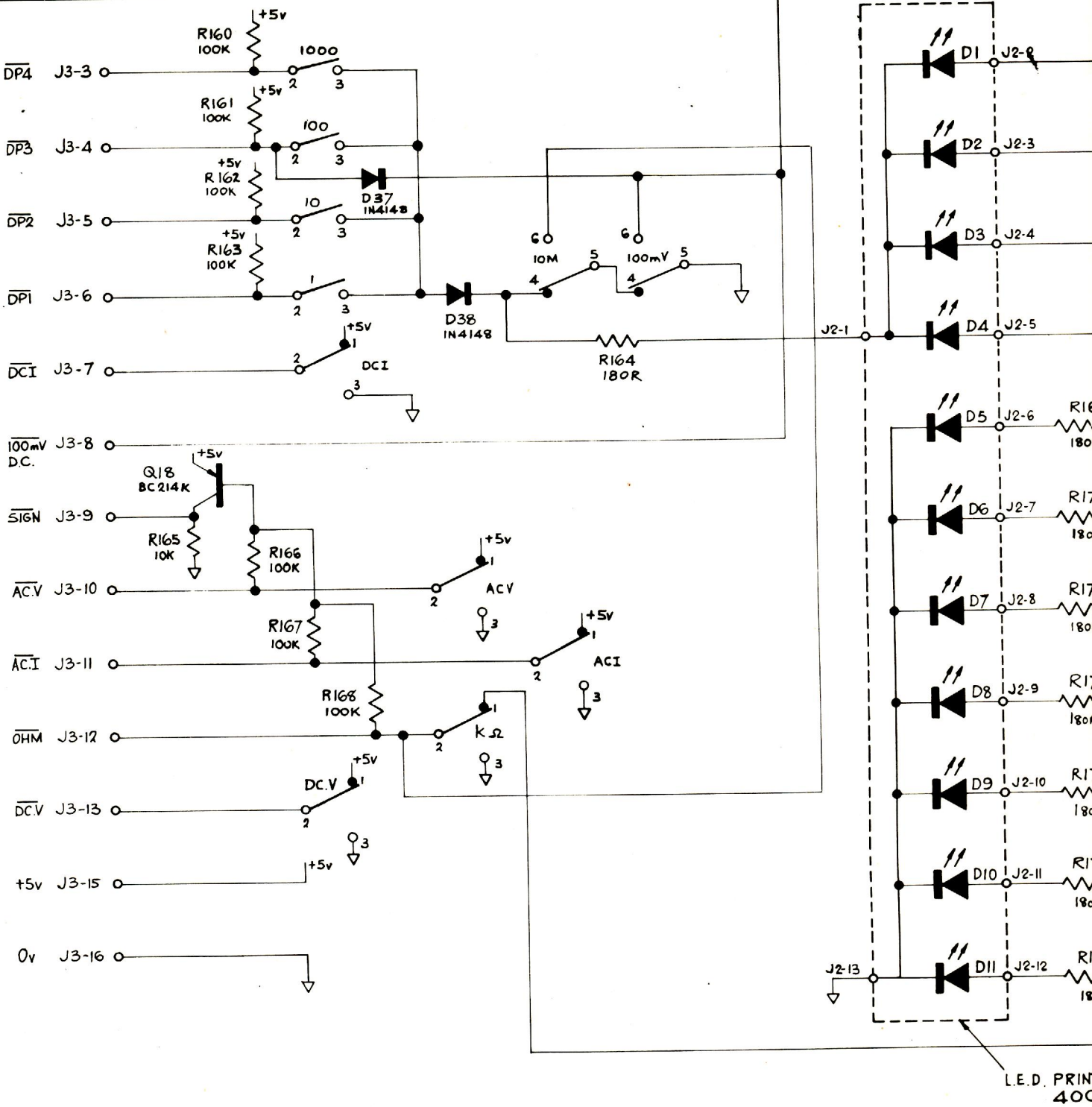

DRAWN IV	CHECKED DCJ	DIMENSIONS IN MILLIMETRES	TOLERANCES ANGULAR ± ½° INCH DIMENSIONS DECIMAL TO 3 PLACES ± .005 DECIMAL TO 2 PLACES ± .010 FRACTIONAL ± 1/64 METRIC DIMENSIONS DECIMAL TO 2 PLACES ± 1mm DECIMAL TO 1 PLACE ± 2mm WHOLE DIMENSIONS ± 4mm UNLESS OTHERWISE STATED	MATERIAL /	
TRACED	APPROVED L.A.D.	SCALE /		FINISH /	TITLE
DATE 13.8.75	DATE 2.2.77	NOT TO BE SCALED			

J.W.1162

4	5	6
ALL BURRS TO BE REMOVED		NOTES

ISS.	CHANGES
I	RELEASED TO PROD^N IV 12/1/76
II	See Sheet 1

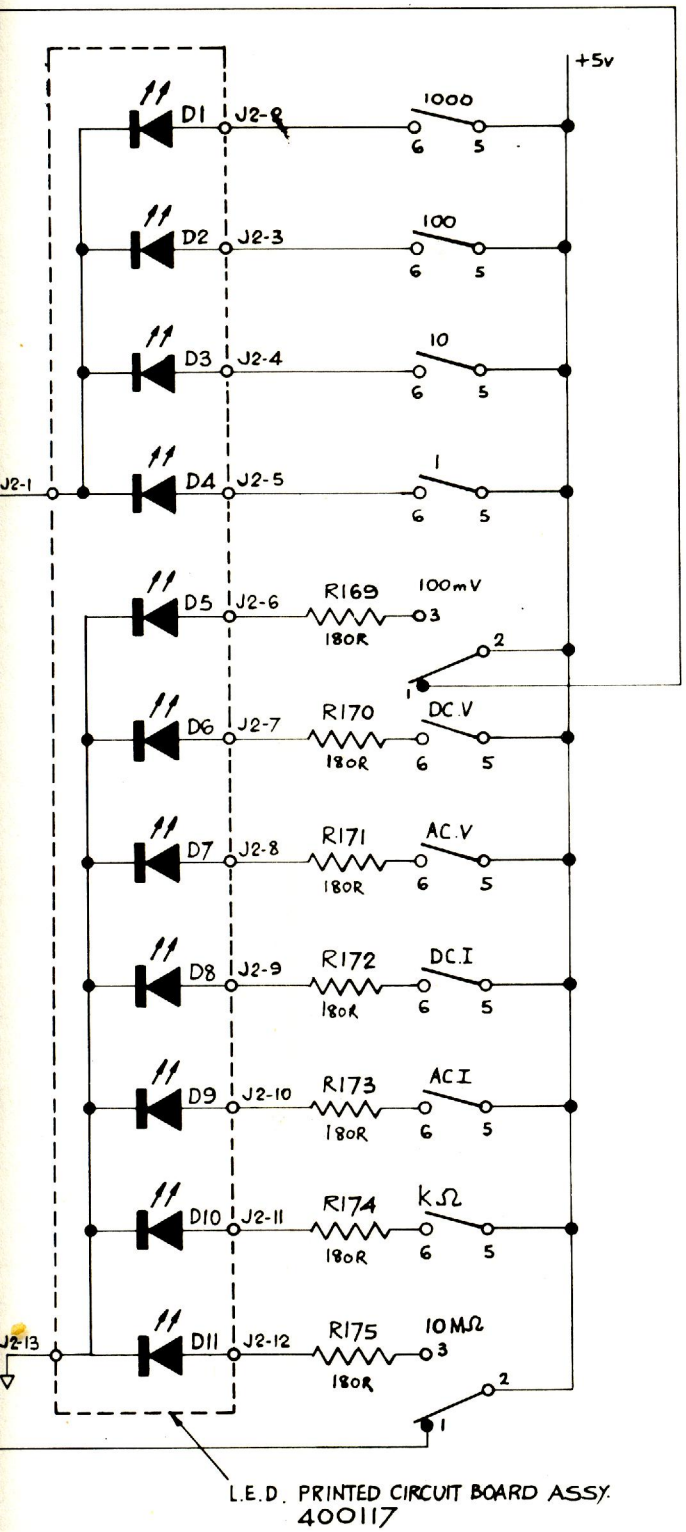

J3	FUNCTION
PIN 1	NOT USED
2	NOT USED
3	$\overline{D.P.4}$
4	$\overline{D.P.3}$
5	$\overline{D.P.2}$
6	$\overline{D.P.1}$
7	$\overline{DC.I}$
8	$\overline{100mV\ D.C.}$
9	$\overline{SIGN}$
10	$\overline{AC.V}$
11	$\overline{AC.I}$
12	$\overline{\Omega}$
13	$\overline{DC.V}$
14	NOT USED
15	+5v.
16	0v.

N.B. SWITCHES SHOWN ARE ON SWITCH BANKS 1 AND 3

datron ELECTRONICS LTD. NORWICH.

DRAWING SIZE A2

TITLE 1059 A-D COMMAND & FUNCTION INDICATION CCT.

DRAWING No. 430023

SHEET 5 OF 5

DRAWING No.	
400113	
FIRST USED ON	1059

THIRD ANGLE PROJECTION

DRAWN IN ACCORDANCE WITH BS 308

ALL BURRS TO B

UNSTRIPPED WIRE LENGHS 2"
BLUE = 510666
RED = 510222
GREEN = 510555
YELLOW = 510444
ORANGE (To D) = 510333
ORANGE (To C) = 510333

RELAY CONNECTIONS TO BE SLEEVED 590001 (HALVED)

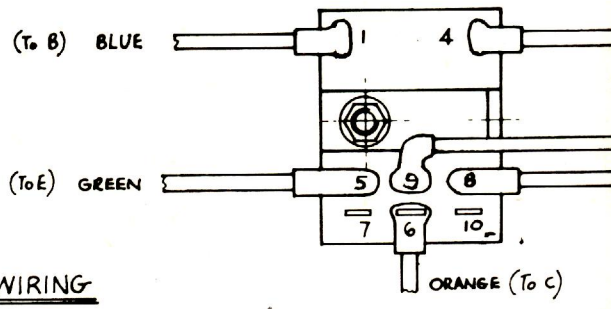

RELAY WIRING

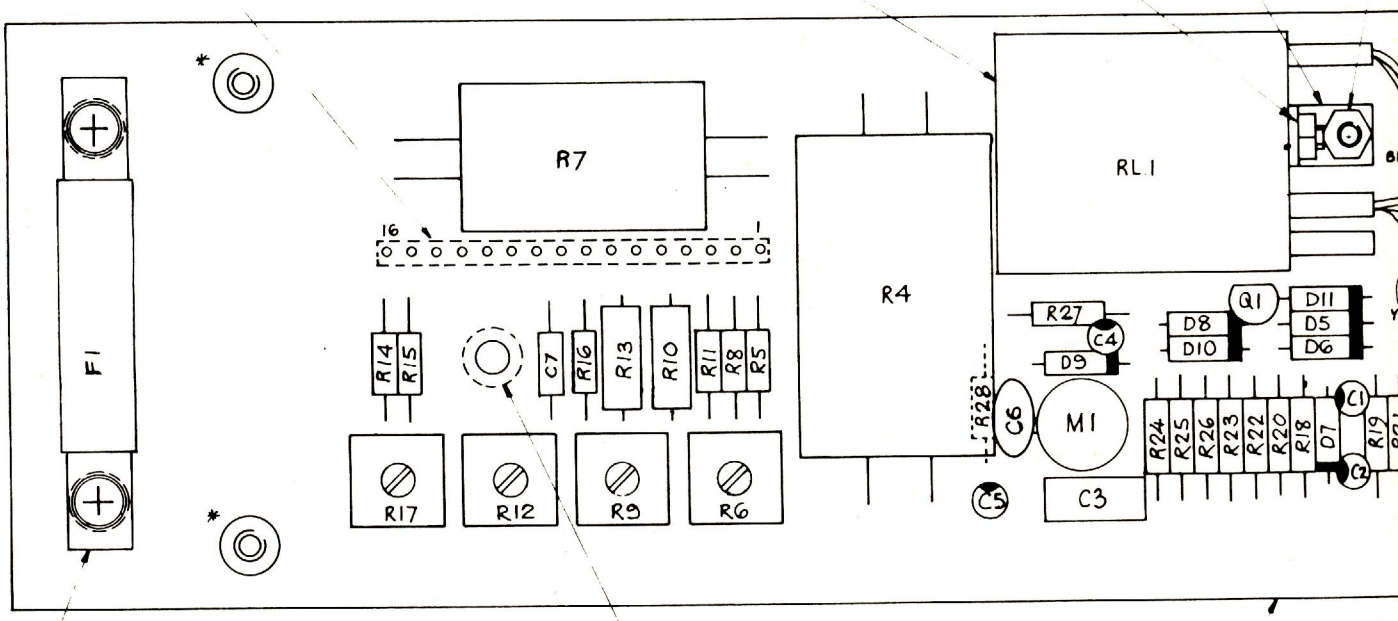

SPARE FUSE 920027

3 OFF M3 CLEAR STANDOFF 614 003

PRINTED CIRCUIT BOARD 410034-3

DRAWN	CHECKED	DIMENSIONS IN	TOLERANCES ANGULAR ± ½°	MATERIAL
IV		MILLIMETRES	INCH DIMENSIONS DECIMAL TO 3 PLACES ± .005 DECIMAL TO 2 PLACES ± .010 FRACTIONAL ± 1/64 METRIC DIMENSIONS DECIMAL TO 2 PLACES ± 1mm DECIMAL TO 1 PLACE ± 2mm WHOLE DIMENSIONS ∓ 4mm UNLESS OTHERWISE STATED	
TRACED	APPROVED	SCALE 2:1		FINISH
DATE 2.12.75	DATE 2.2.77	NOT TO BE SCALED		TITLE 10

J W 1162

4	5	6

ALL BURRS TO BE REMOVED

NOTES

1. FIT GUARD SHIELD 450069 WITH 4 OFF M3 X 6 POSIPAN (611004) AND 4 OFF M3 SHAKEPROOF (613005)

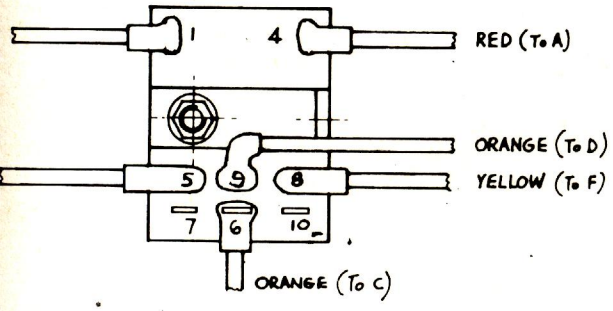

14 OFF INSULATING BEAD 630024

Nº PER TERMINAL:
D3, D4 — 1
R2, R3 — 2
R1 — 1

RELAY BRACKET 459112

M3X6 POSIPAN 611004
M3 SHAKEPROOF 613005
M3 NUT 615002

WIRE (7/·2 P.V.C COV.) 510 ***

UNC NUT 5,005
AKEPROOF 3005

4 OFF STANDOFF 612004 (FITTED UNDER FUSE HOLDER)

4 OFF SCREW (M3X6mm) 611007
4 OFF WASHER 613005

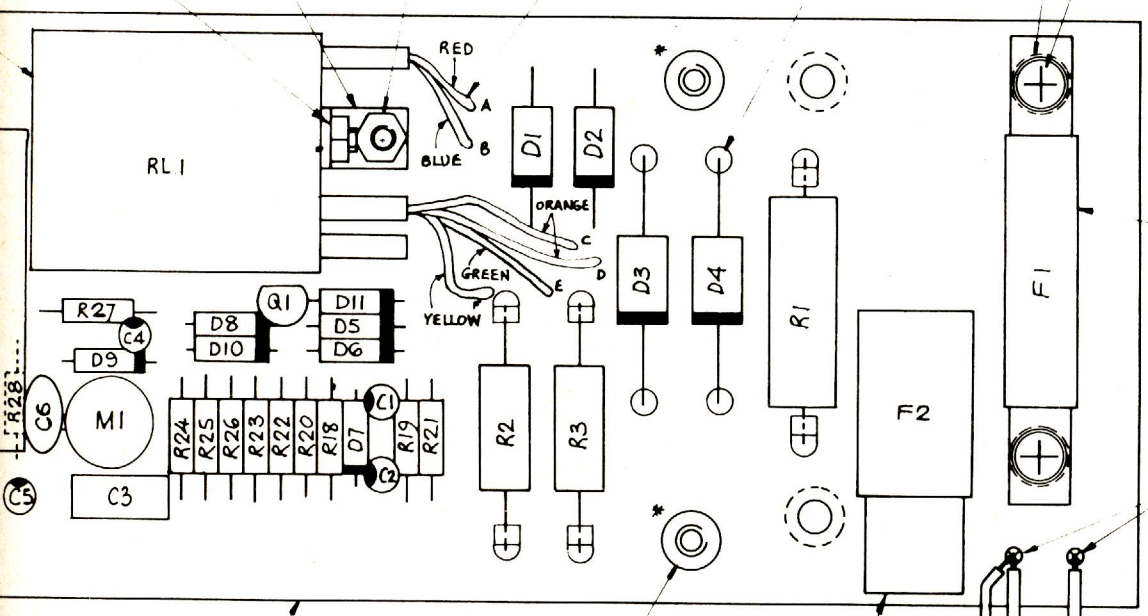

FUSE 920027

2 OFF RIVET TERMINAL 620003

BROWN
BLUE
BLACK
VOLTS Lo
CABLE 400120-2

4 OFF M3 STANDOFF 612005

PRINTED CIRCUIT BOARD 410034-3

QUICK-BLOW FUSE 920025
FUSE HOLDER 920026

ISS.	CHANGES
1	RELEASED To PRODN IV. 12/1/76
2	ECO. 145 P/Ls. CHANGE ONLY IV 30/1/76
3	ECO 231 C7 ADDED PIN 1-9-76
4	ECO 239 PCB BECOMES ISSUE 3
5	ECO 216. 6.9.76. PIN ADD BLACK WIRE
6	ECO 295 19.10.76 PT. LIS. CHANGES PIN
7	ECO 375 2-2-77 PARTS LIST ALTERED LB
8	ECO 331. 2-2-77 PARTS LIST ADD. LB
9	ECO. 411 30-3-77 PARTS LIST CHANGES IV.

datron ELECTRONICS LTD. NORWICH.

DRAWING SIZE A2

TITLE 1059 CURRENT BOARD ASSY.

DRAWING No. 400113

SHEET 1 OF 5

DRAWING No.	
430031	
FIRST USED ON	1059

THIRD ANGLE PROJECTION

DRAWN IN ACCORDANCE WITH BS 308

ALL BURR

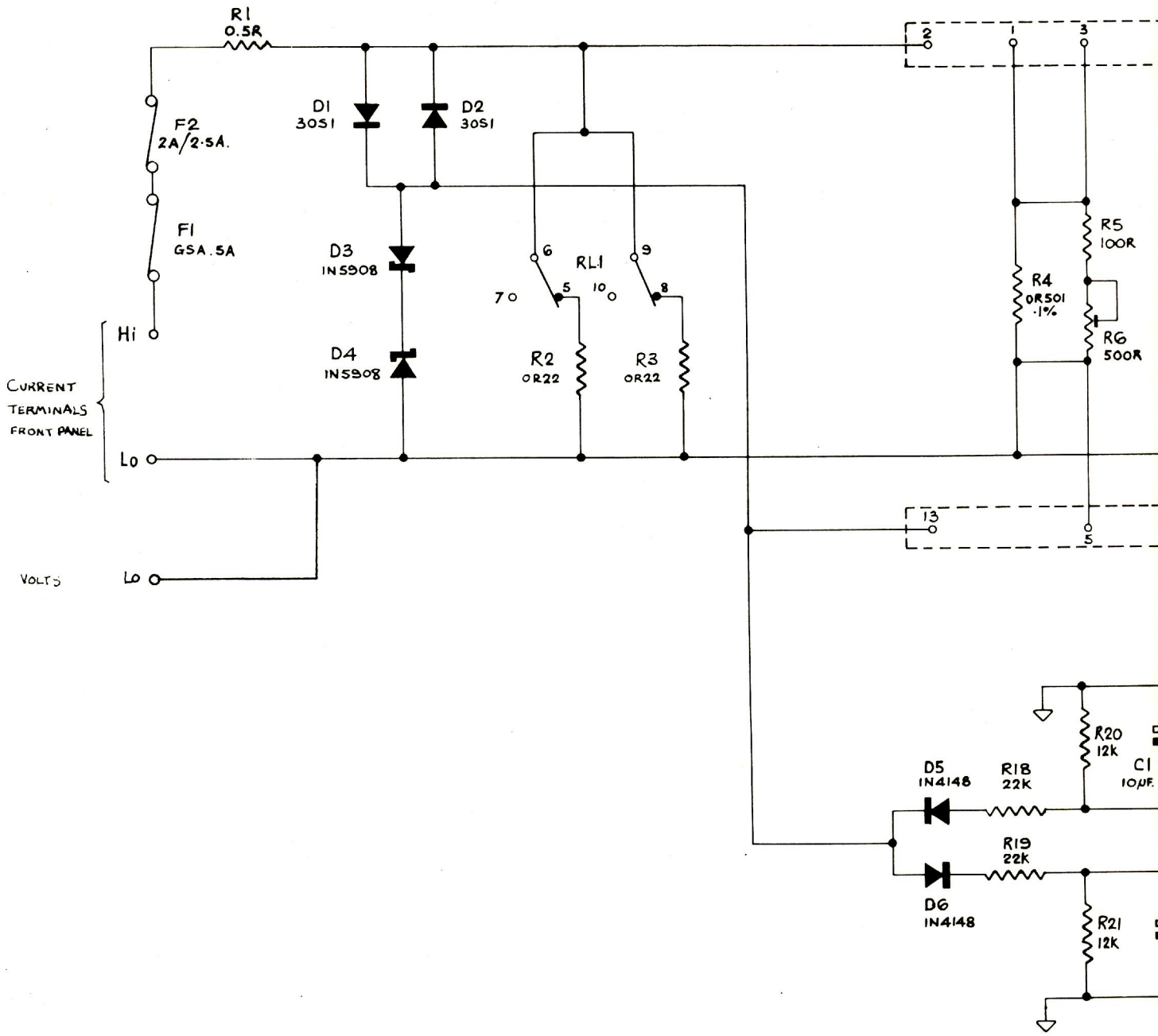

DRAWN	CHECKED	DIMENSIONS IN	TOLERANCES ANGULAR ± ½°	MATERIAL
IV	P.R.H.		INCH DIMENSIONS	
TRACED	APPROVED	MILLIMETRES	DECIMAL TO 3 PLACES ± 005	
	L.A.D.	SCALE	DECIMAL TO 2 PLACES ± 010	FINISH
DATE	DATE		FRACTIONAL ± 1/64	
4.12.75	2.2.77	NOT TO BE SCALED	METRIC DIMENSIONS	TITL
			DECIMAL TO 2 PLACES ± 1mm	
			DECIMAL TO 1 PLACE ± 2mm	
			WHOLE DIMENSIONS ∓ 4mm	
			UNLESS OTHERWISE STATED	

JW 1162

4	5	6
ALL BURRS TO BE REMOVED		NOTES

ISS.	CHANGES
1	RELEASED TO PROD^N IV 12/1/76
2	ECO 145 R1 WAS OR47 IV 30.1.76
3	ECO 216. 6.9.76 V Lo link I Lo Tbu
4	ECO 231 11.11.76 C7 ADDED
5	ECO 331. 2-2-77 C6 WAS 33pF LB
6	ECO 375 2-2-77 PARTS LIST MOD LB
7	ECO 411 30-3-77 PARTS LIST CHANGES IV

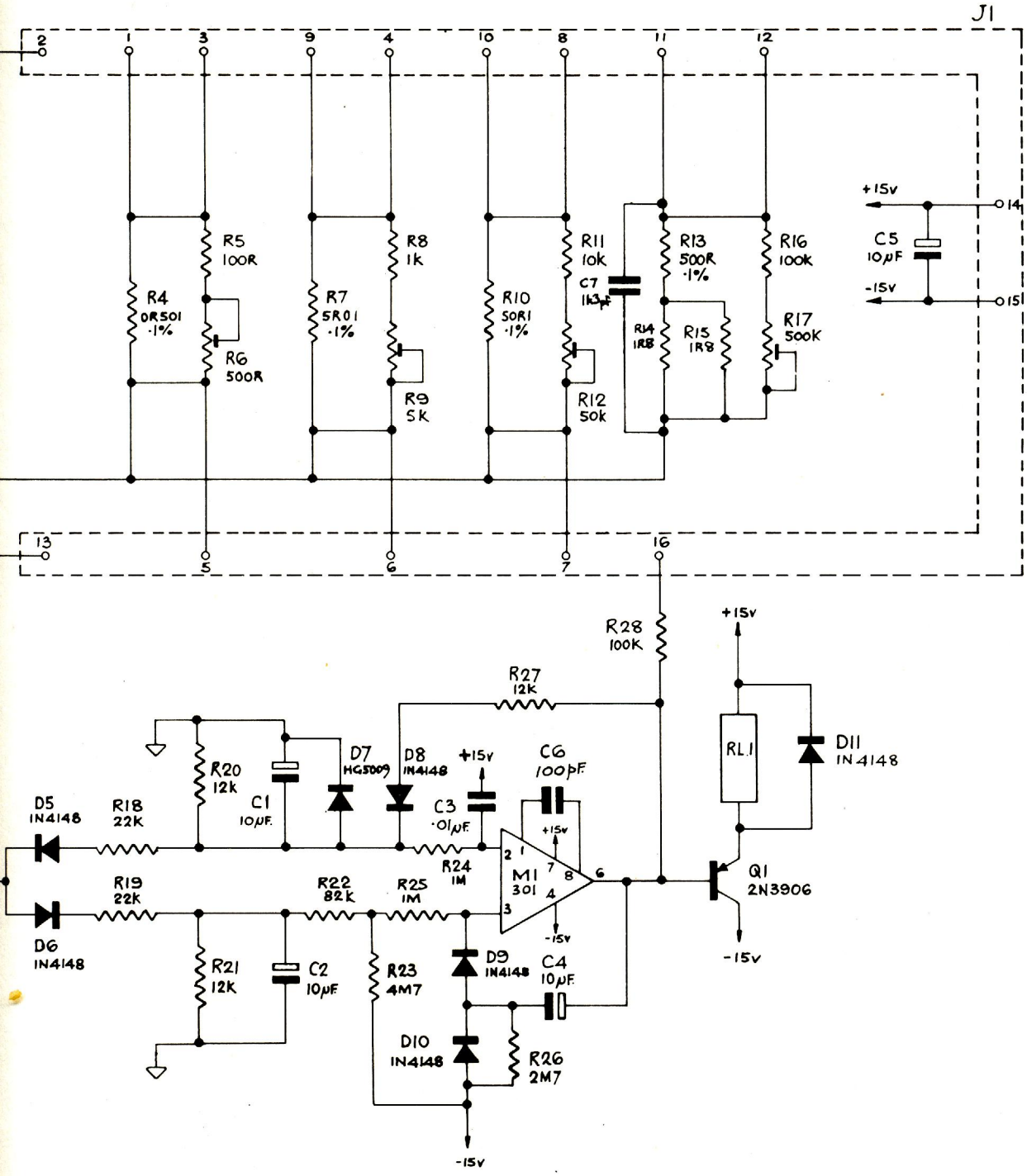

datron ELECTRONICS LTD. NORWICH.

DRAWING SIZE A2

TITLE	DRAWING No.	SHEET
1059 CURRENT BOARD SCHEMATIC	430031	1 OF 1

IMPORTANT

WHEN FITTING T4 TO BOARD, ALL FLYING LEADS SHOULD BE CUT TO SUFFICIENT LENGTH (ALLOW FOR ½"-1" LOOP TO FORM) TO ALLOW TRANSFORMER RADIAL FREEDOM DURING CALIBRATION PROCEDURE.

T4 SECURED WITH FOLLOWING:-
1 OFF SCREW (M3x35) 611019
1 OFF NUT 615002
1 OFF SHAKEPROOF 613005
1 OFF WASHER 613007

THE FOLLOWING ITEMS ARE USED TO SECURE M47, M48 & M50:
3 OFF SCREW (M3 X 10mm LG) 611006
3 OFF NUT 615002
3 OFF M3 SHAKEPROOF 613005

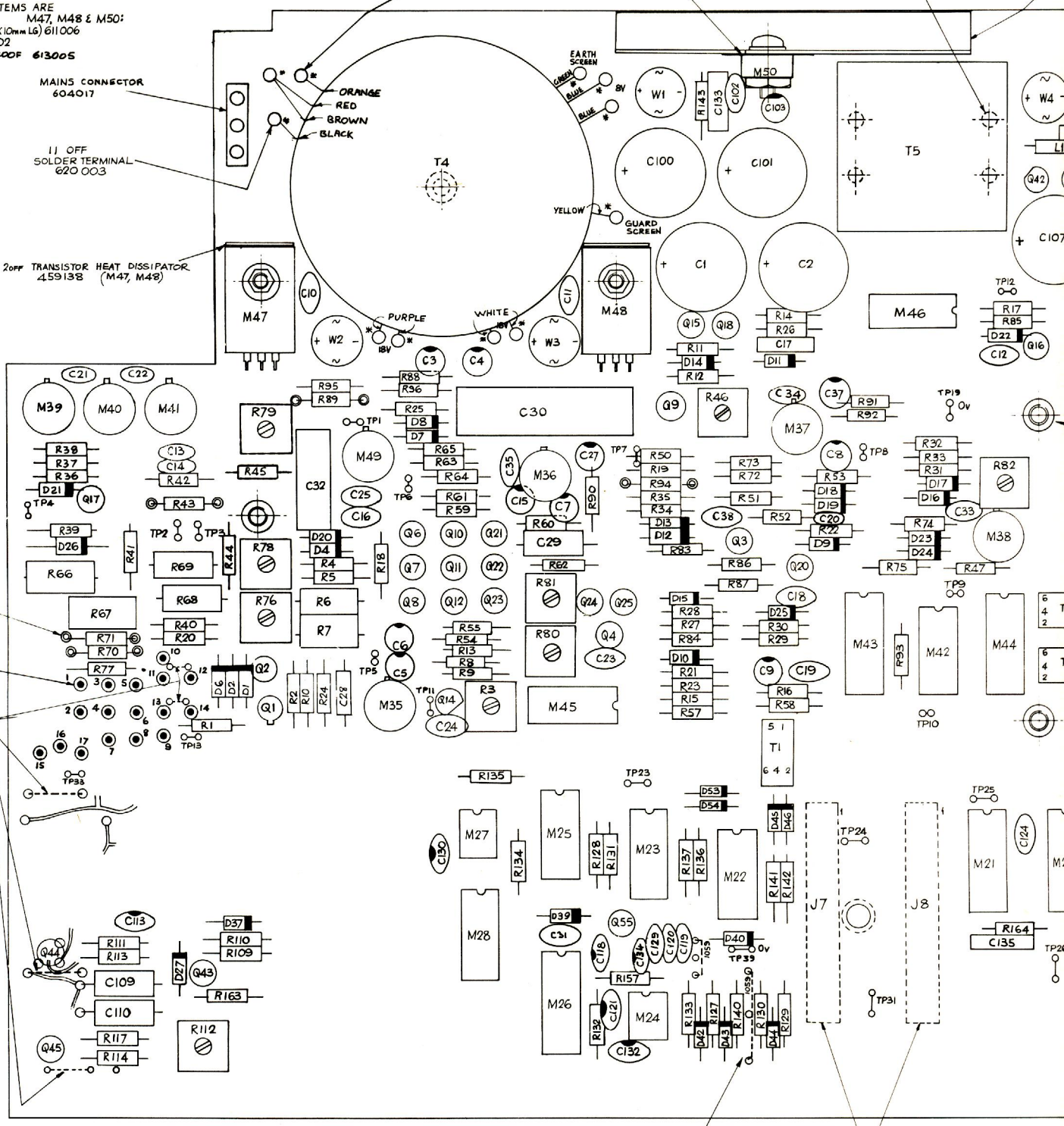

PIN Nº	PIN FUNCTION	LEAD COLOUR
1	ANAL. COMM.	GREEN
2	ANAL. COMM.	GREEN R
3	-15V	BLUE
4	-15V	BLUE R
5	+15V	RED
6	+15V	RED R
7	GUARD	YELLOW
8	SIG. COMM.	BLACK
9	SIG. INPUT	ORANGE
10	-5V. REF. (TO OHMS)	PURPLE
11	-5V. REF.-SENSE OUT	BROWN R
12	EXT. REF " IN	WHITE R
13	-5V. REF. DRIVE OUT	WHITE/RED R
14	EXT. REF. DRIVE	ORANGE/BL'K. R
15	RATIO LAMP DRIVE	GREY R
16	+5V. POWER	RED/BL'K. R
17	DIGITAL COMMON	PINK R

← R = RATIO ONLY.

3 OFF WIRE LINKS (540001) MARKED '1059'

NOTE: J7 AND J8 TO BE SOLDERED TO UNDERSIDE OF BOARD

OTHER ITEMS REQD TO ASSEMBLE PCB:

1. 8-WAY D.I.L. BUCKET. 602005. 26 OFF
2. 7-WAY D.I.L. BUCKET 602006 30 OFF
3. 24 WAY D.I.L. SOCKET 605012 1 OFF
4. D.I.L. SOCKET STRIP TERM'S. 418 OFF. (602004)
5. TEST POINT LOOPS (TP1 ETC) MADE FROM 24 SWG. B.T.C. WIRE. (540001) CUT AS REQD.
6. R45/R79 & 10 OFF CONNECTOR TERMINAL 601002 (SHOWN DOTTED -RATIO ONLY) ARE CALLED UP ON SEPARATE P/Ls FOR RATIO OPTIONS R0.3/R0.6 - 440034/440035
7. UPPER GUARD SHIELD 450039 AND LOWER GUARD SHIELD 450040 SECURED WITH SCREW M3 X 10 (611006) 6 OFF. AND SHAKEPROOF M3 (613005) 6 OFF.

ISS	CHANGES.
1	RELEASED To PRODUCTION
8	ECO.147. R165 ADDED. M.J.D. 9.2.76.
9	ECO.172 R165 MOVED. M.J.D. 30.3.76.
10	ECO.192. R131, C121 & D39 ADDED. M.J.D. 30.3.76.
11	ECO.194. R36-38, D21, Q17 & M39 ADDED M.J.D. 12.4.76
12	ECO 202 PT. LT. CHANGE M.J.D. 12.4.76.
13	ECO 211 PT. LT. CHANGE M.J.D. 23.6.76.
14	ECO 225 PT. LT. CHANGE PJH 27.8.76
15	ECO 230 27.8.76 6BA NYLON WASHERS ADDED
16	ECO 289 13.9.76 P.T. LTS. CHANGES PJH
17	ECO 247 17.11.76 PCB to iss 8 C31, main connector added. PJH
18	ECO 413 31.3.77 PARTS LIST CHANGES II.
19	ECO 449 25.4.77 PT. LT. CHANGES PJH

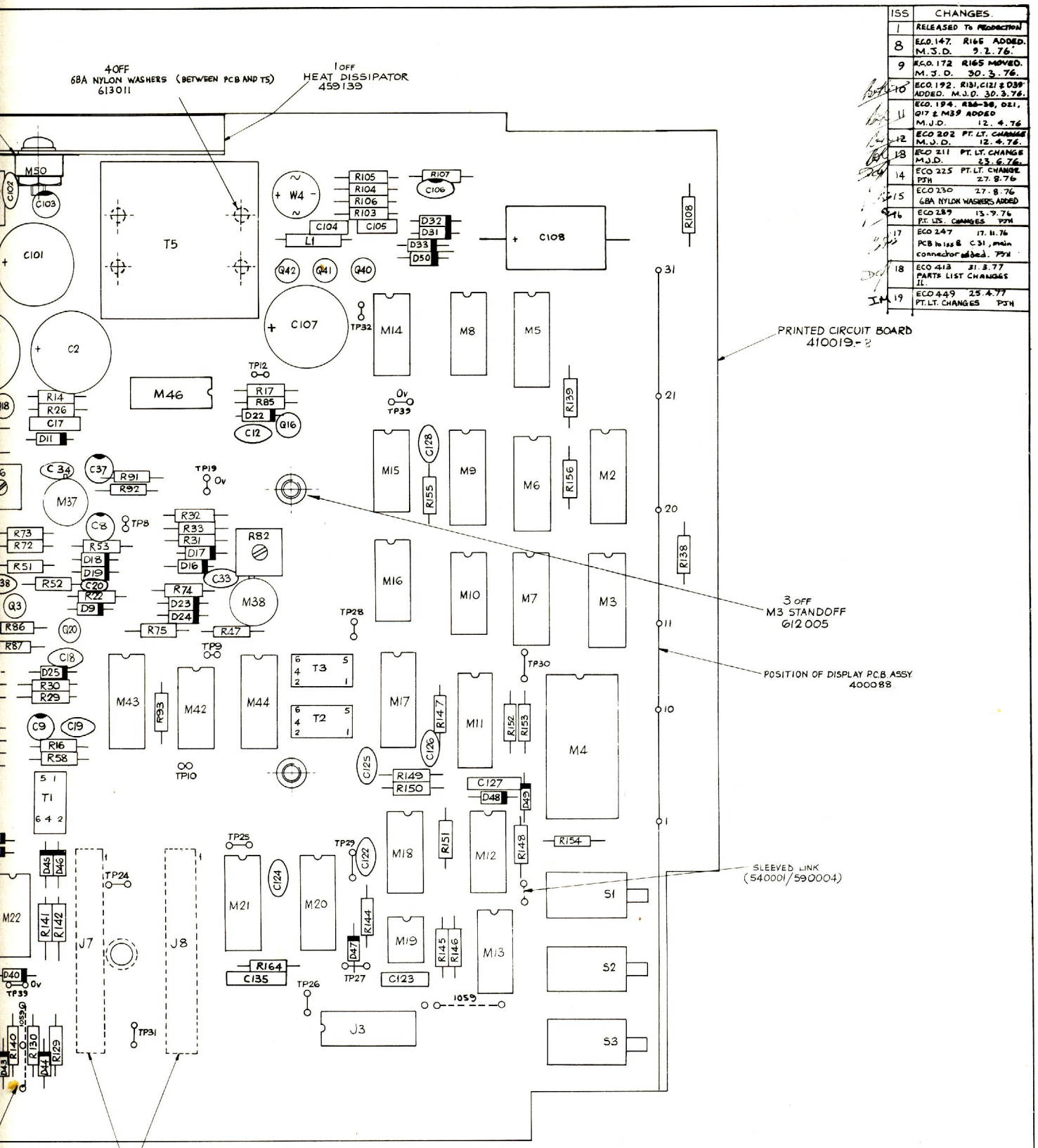

QP TO ASSEMBLE P.C.B:
.. BUCKET. 602005. 26 OFF
.. BUCKET 602006 30 OFF
.. SOCKET 605012 1 OFF
ET STRIP TERMTS. 418 OFF. (602004)

LOOPS (TP1 ETC) MADE FROM
TC. WIRE. (540001) CUT AS REQD.

& 10 OFF CONNECTOR TERMINAL 601002 (SHOWN DOTTED
LY) ARE CALLED UP ON SEPARATE P/Ls FOR RATIO
R0.3/R0.6 - 440034/440035
ARD SHIELD 450039 AND
ARD SHIELD 450040 SECURED
REW M3 X 10 (611006) 6 OFF.
EPROOF M3 (613005) 6 OFF.

ISSUE No	DATE
1	RELEASED To PROD 12/9/75
2	ECO 108 26/9/75
3	ECO 114 3/10/75
4	ECO 121 23/10/75
5	E.C.O 130 18/12/75
6	ECO 138 8/1/76
7	ECO 142 28/1/76
CONT. IN TOP R.H. COLUMN.	

datron ELECTRONICS LTD

R&D.

CHECK

PROD. L.A.D. 2.2.77

1059 A-D
P.C.B. ASSEMBLY

400105

SHEET 1
OF 14

430029
SHT. 1

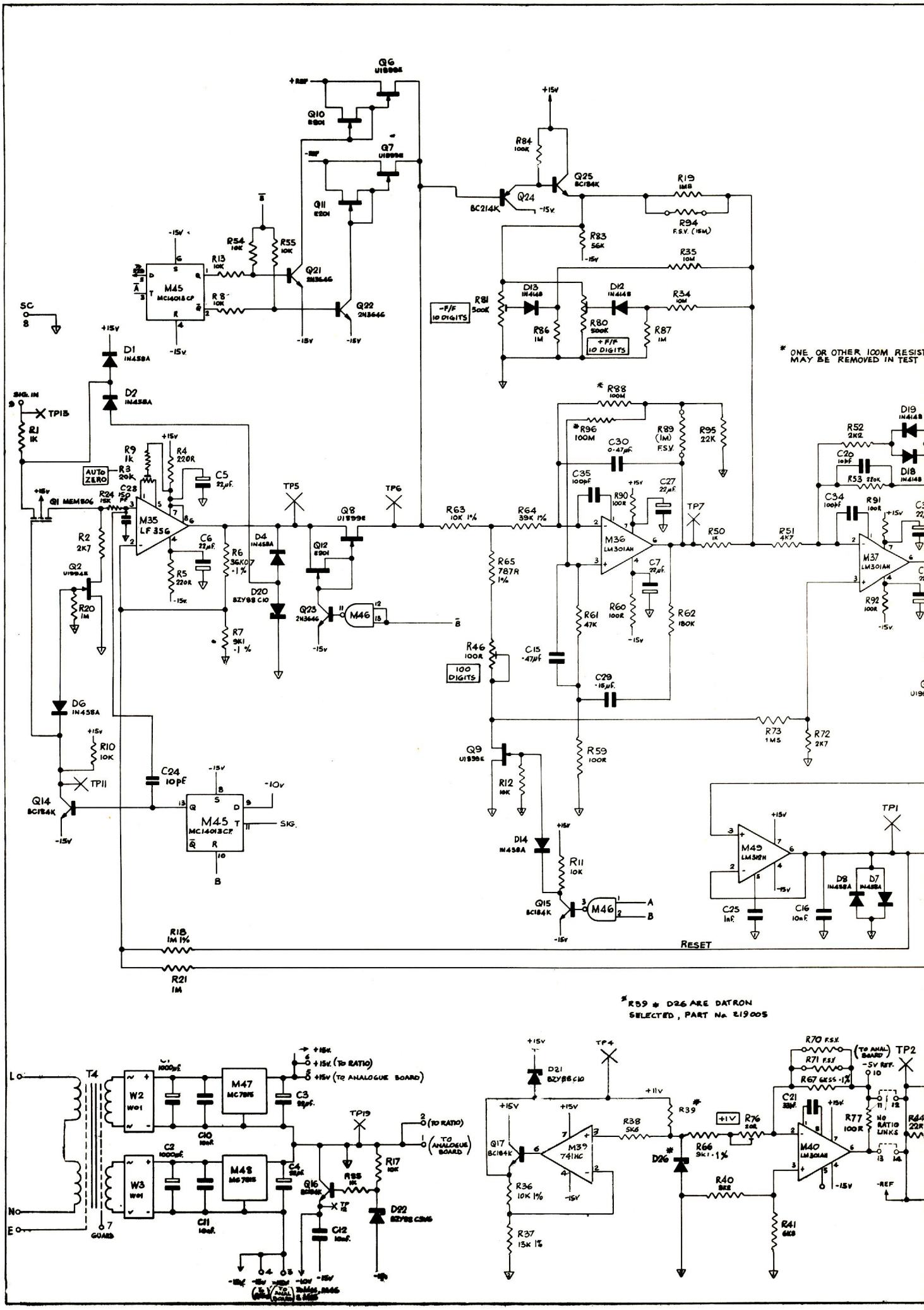
* ONE OR OTHER 100M RESIST
MAY BE REMOVED IN TEST
*R39 & D26 ARE DATRON
SELECTED, PART No. 219005
RESET
SIG. IN
AUTO ZERO
-F/F 10 DIGITS
+F/F 10 DIGITS
100 DIGITS
(TO RATIO)
(TO ANALOGUE BOARD)
NO RATIO LINKS
GUARD

	A	B	$\bar{A}$	$\bar{B}$
RESET	0	0	1	1
SIG	1	0	0	1
REF. 1	0	1	1	0
REF. 2	1	1	0	0

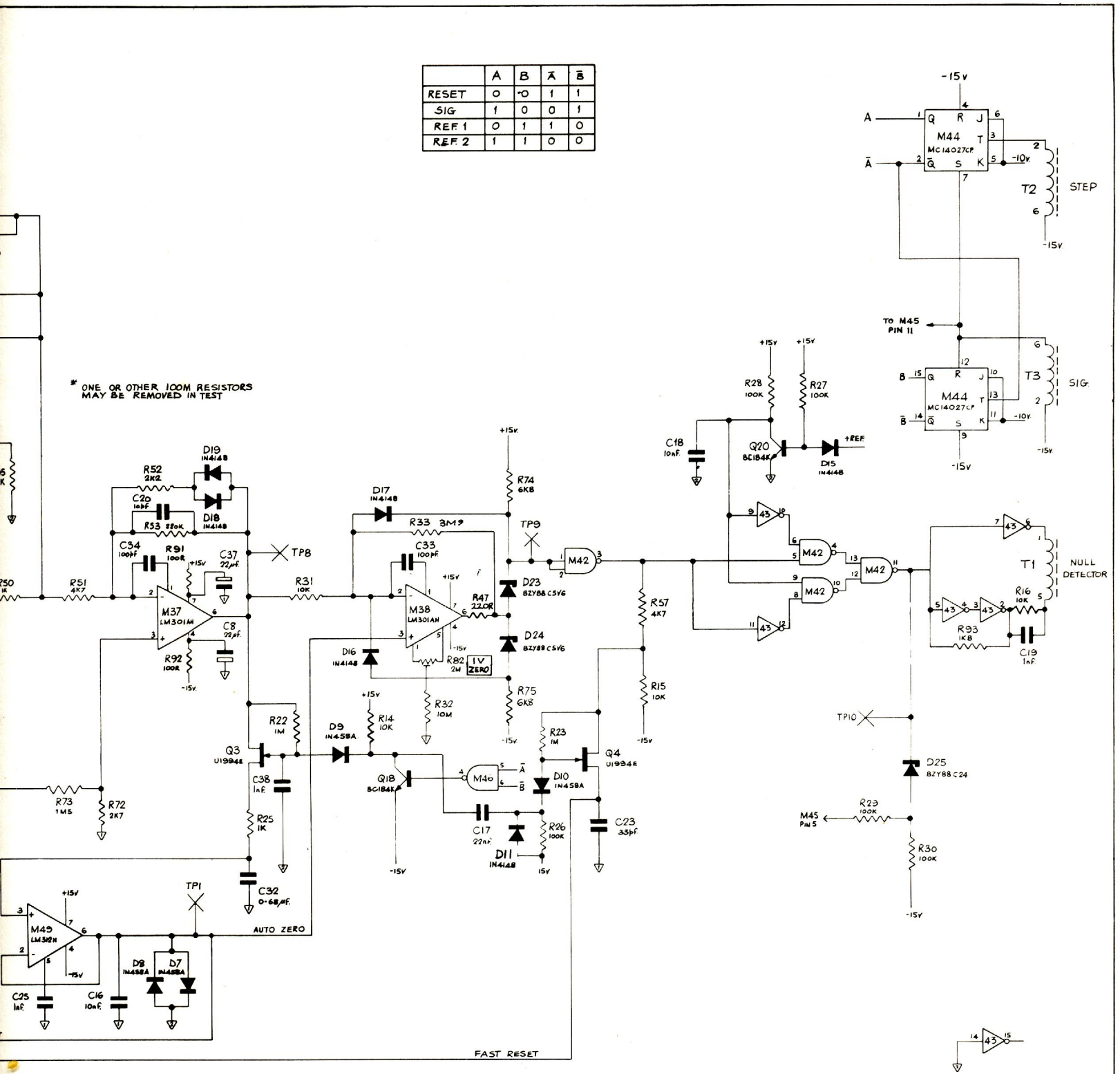

ISSUE	DATE	ISSUE No	DATE
9 (SHT1)	ECO 449 25-4-77	1	RELEASED TO PROD 12/9/75
		2	ECO. 121 27.10.75
		3	ECO 142 28/1/76
		4	ECO 147 3/2/76
		5	ECO 194 12/4/76
		6	ECO 211 22/6/76
		7	ECO 247 17-11-76
		8	ECO 413 31-3-77

datron ELECTRONICS LTD.

R&D I.V.

CHECK

PROD. L.A.D. 22.77

1059 A-D
ANALOGUE SECTION

430029

SHEET 1 OF 4

J3		J7	J8
1	NOT USED	-	-
2	NOT USED	-	-
3	$\overline{DP4}$	-	11
4	$\overline{DP3}$	-	12
5	$\overline{DP2}$	-	13
6	$\overline{DP1}$	-	14
7	$\overline{DC.I}$	5	-
8	$\overline{100mV\ D.C.}$	-	15
9	$\overline{SIGN}$	-	-
10	$\overline{AC\ V}$	2	-
11	$\overline{AC.I}$	13	-
12	$\overline{\Omega}$	-	16
13	$\overline{DC.V}$	7	-
14	NOT USED	-	-
15	+5V	10	-
16	0V	9	-

J7		J3
1	O_A	-
2	$\overline{AC\ V}$	10
3	$\overline{SIG}$	-
4	$\overline{DELAY}$	-
5	$\overline{DC.I}$	7
6	$\overline{-VE}$	-
7	$\overline{SIGN}$	9
8	+VE	-
9	0V	16
10	+5V	15
11	$\overline{HOLD}$	-
12	$\overline{COMMAND}$	-
13	$\overline{AC.I}$	11
14	$\overline{FP\ OVERRIDE}$	-
15	$\overline{PRINT\ INHIBIT}$	-
16	DATA VALID	-

J8		J3
1	OVERRANGE	-
2	OVERLOAD	-
3	B	-
4	A	-
5	D	-
6	C	-
7	O_E	-
8	O_B	-
9	O_D	-
10	O_C	-
11	$\overline{DP4}$	3
12	$\overline{DP3}$	4
13	$\overline{DP2}$	5
14	$\overline{DP1}$	6
15	$\overline{100\ mV\ DC.}$	8
16	$\overline{\Omega}$	12

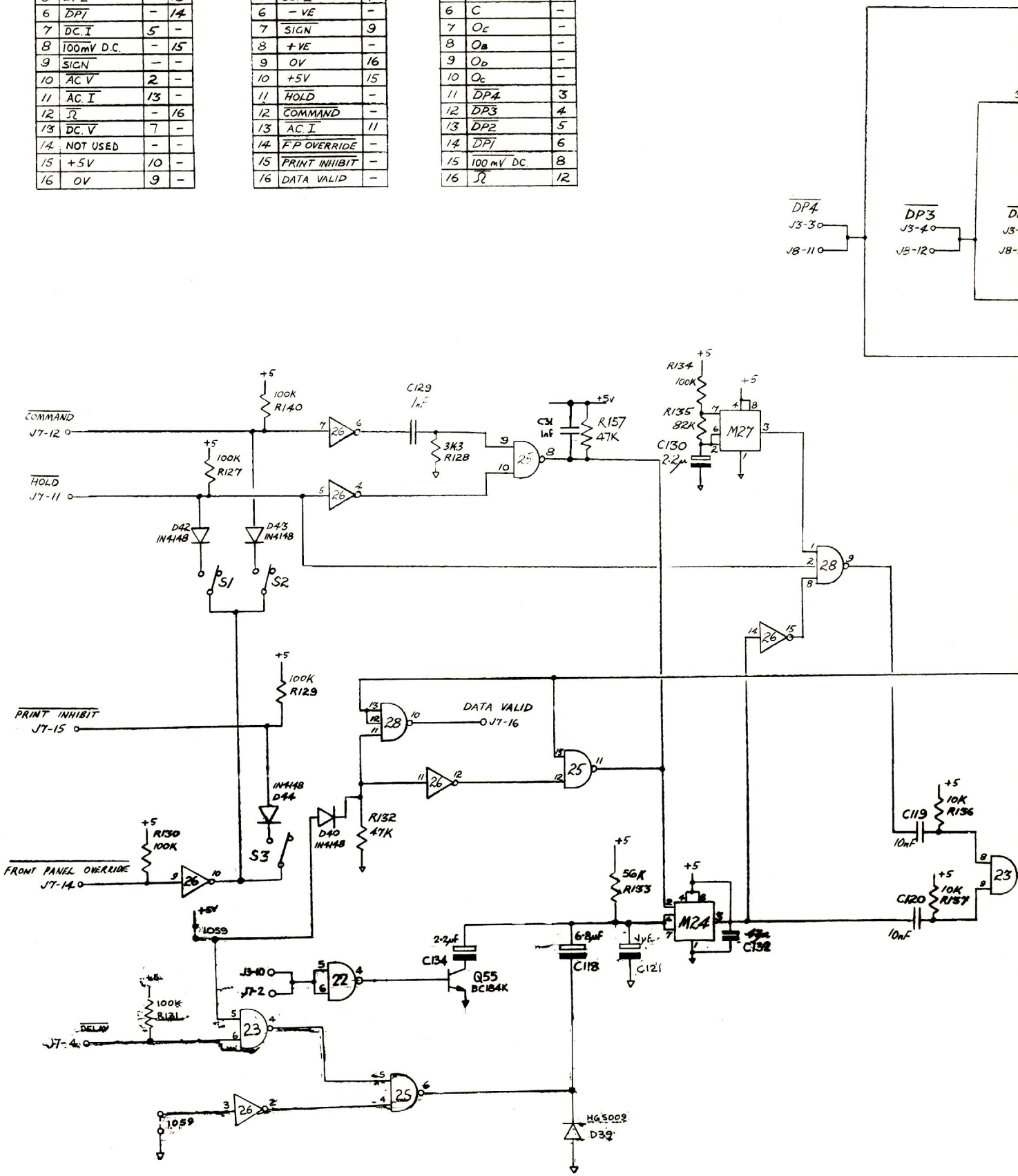

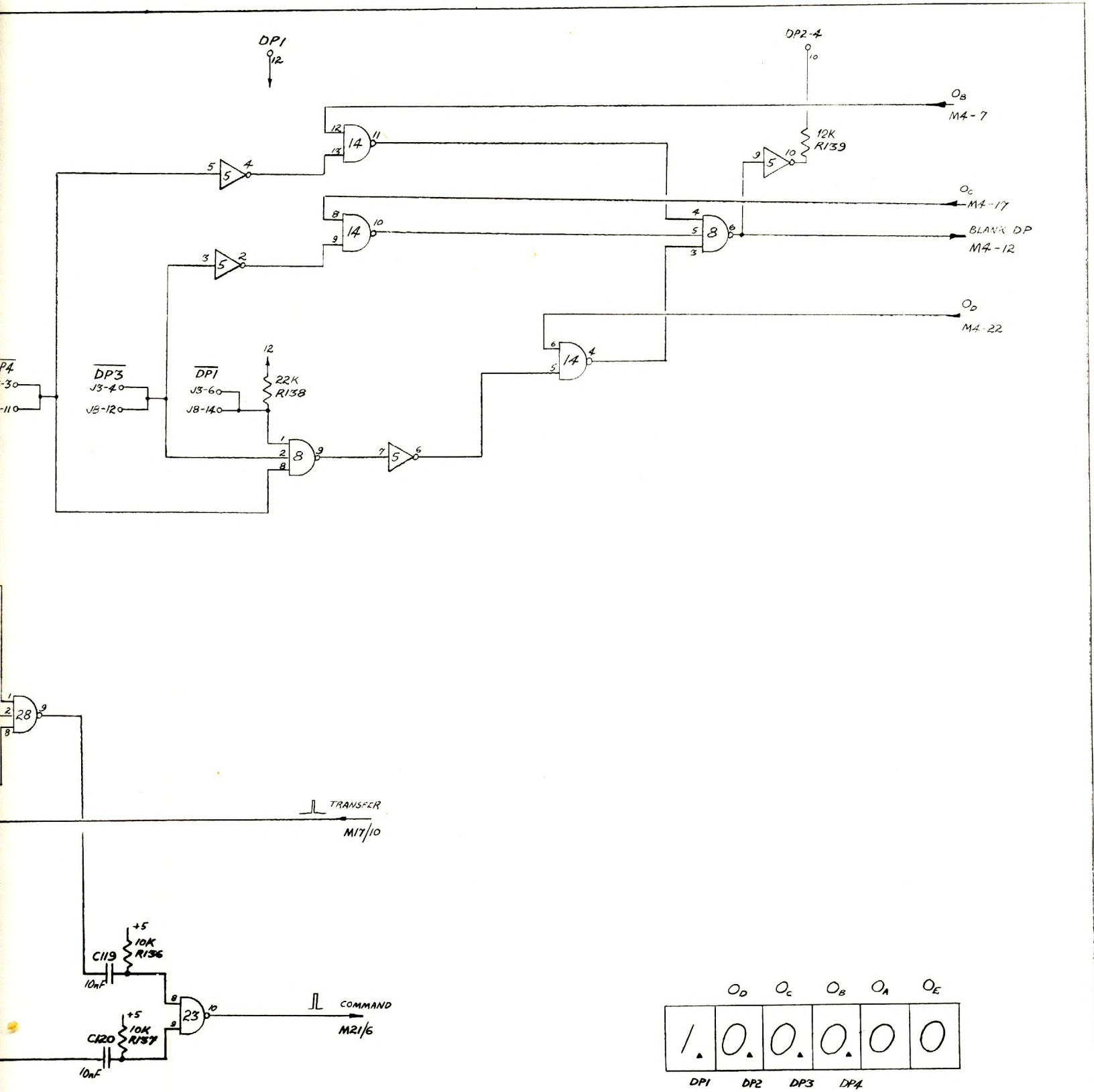

ISSUE Nº	DATE	datron ELECTRONICS LTD	
1	RELEASED TO PROD. 12/9/75	R&D. IV	1059 A-D (DIGITAL)
2	ECO. 193. 30.3.76.		
3	ECO 247 17.11.76	CHECK	
~~8~~			
9 (SHT1)		PROD. L.A.D. 2.2.77	430029

SHEET 2 OF 4

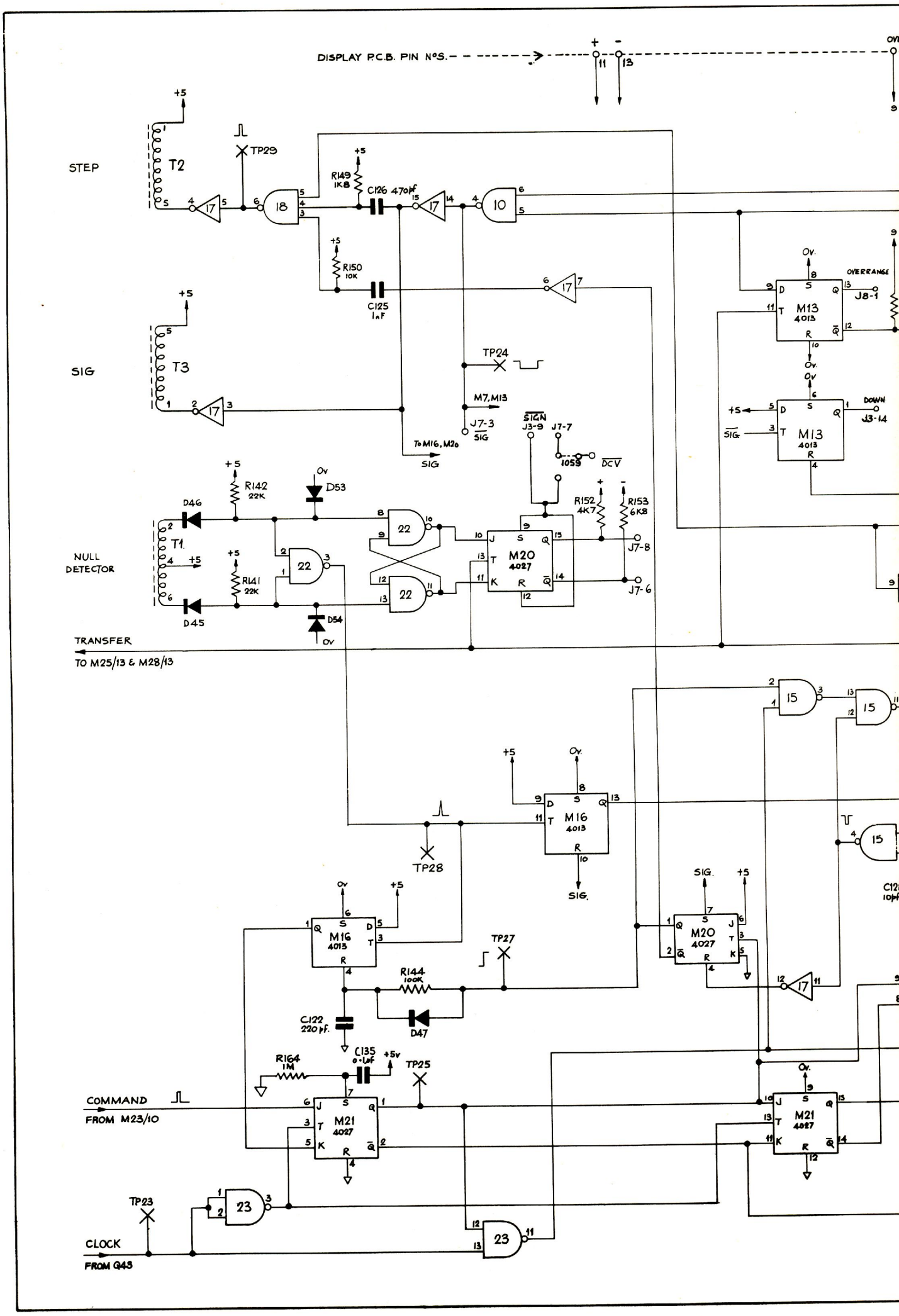
DISPLAY P.C.B. PIN Nos.
STEP
T2
TP29
R149 1K8
C126 470pF
R150 10K
C125 1nF
SIG
T3
TP24
M7, M13
J7-3
SIG
To M16, M20
SIG
SIGN
J3-9
J7-7
105S
DCV
R142 22K
D53
D46
T1
NULL DETECTOR
R141 22K
D45
D54
R152 4K7
R153 6K8
J7-8
J7-6
M20 4027
M13 4013
OVERRANGE
J8-1
DOWN
J3-14
TRANSFER
TO M25/13 & M28/13
M16 4013
TP28
SIG.
M20 4027
TP27
R144 100K
D47
C122 220pF
C135 0·1pF
R164 1M
TP25
COMMAND
FROM M23/10
M21 4027
TP23
CLOCK
FROM Q43

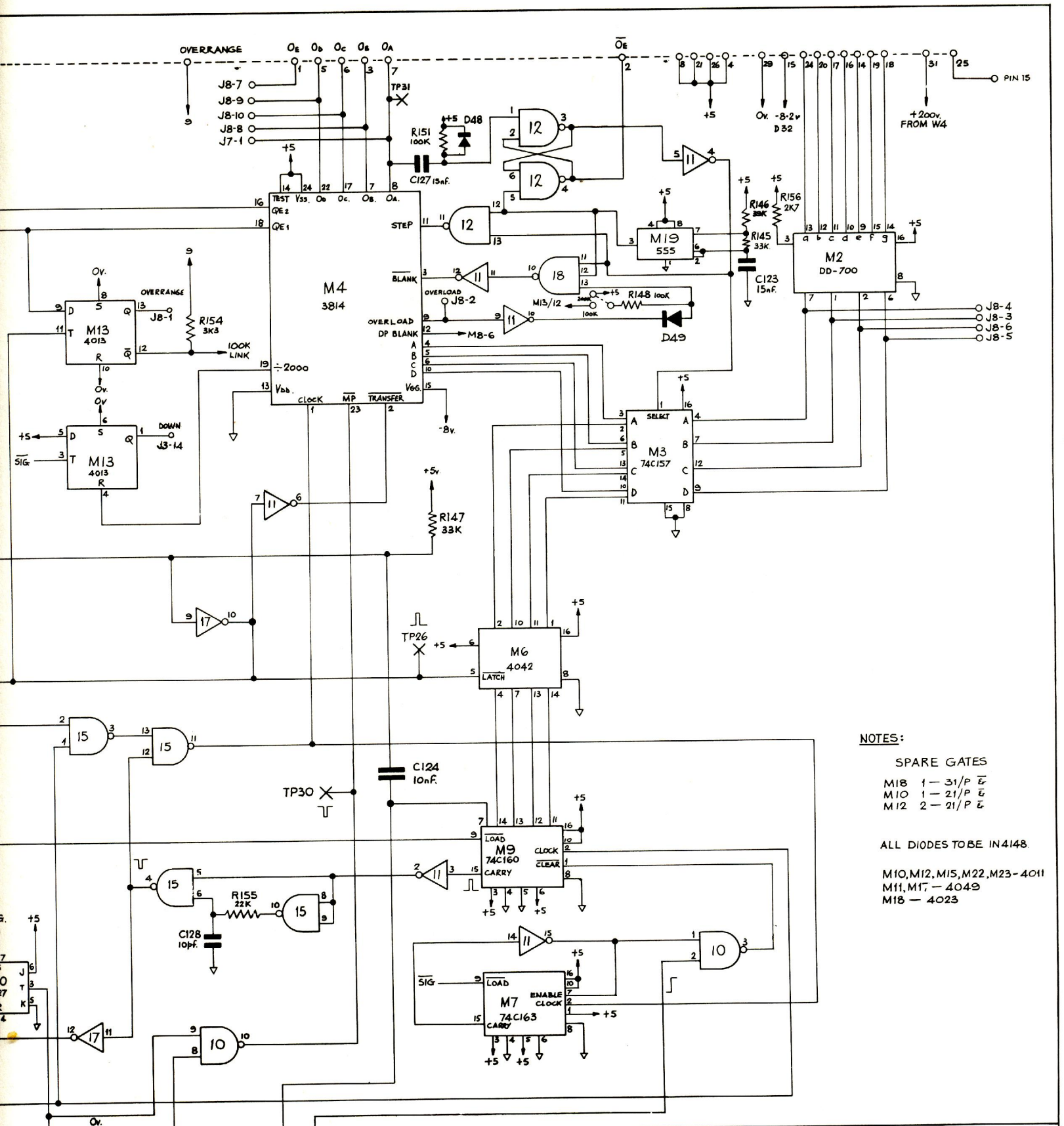

NOTES:

SPARE GATES

M18 1 — 31/P $\overline{E}$
M10 1 — 21/P $\overline{E}$
M12 2 — 21/P $\overline{E}$

ALL DIODES TO BE IN4148.

M10, M12, M15, M22, M23 - 4011
M11, M17 — 4049
M18 — 4023

ISSUE Nº	DATE	datron ELECTRONICS LTD	
1	RELEASED To PROD. 12/9/75	R&D IL	1059 A-D SCHEMATIC
2	ECO. 121 27.10.75		
8		CHECK	
9 (SMT1)			
		PROD. L.A.D. 2.2.77	430029
			SHEET 3 OF 4

DRAWING No.	
430029	
FIRST USED ON	1059

THIRD ANGLE PROJECTION

DRAWN IN ACCORDANCE WITH BS 308

ALL BURRS

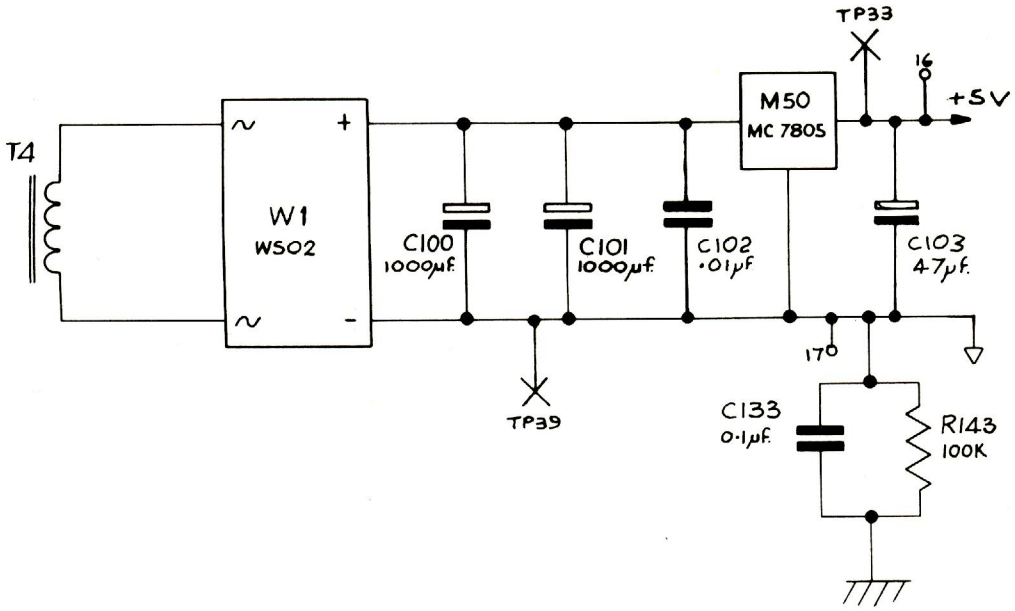

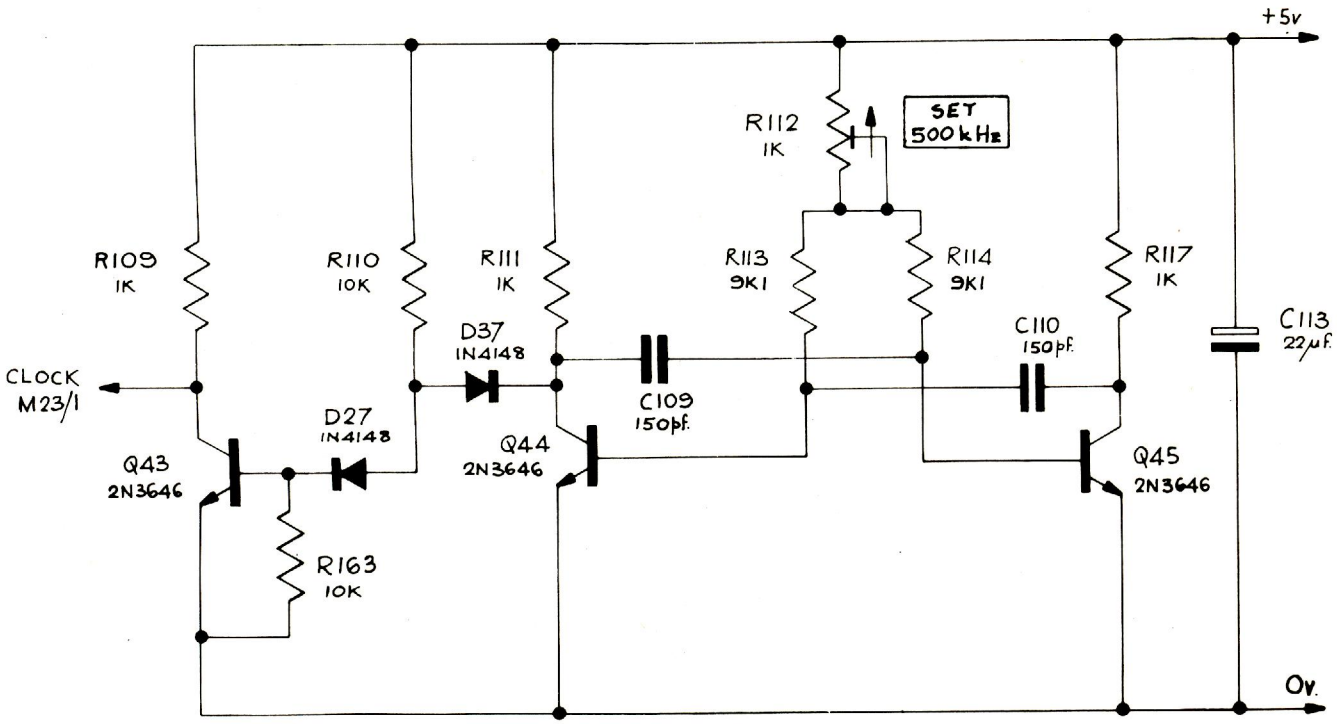

+5v

Q40
BC184K

TO

DRAWN	CHECKED	DIMENSIONS IN	TOLERANCES ANGULAR ± 1°	MATERIAL
TRACED	APPROVED L.A.D.	MILLIMETRES	INCH DIMENSIONS DECIMAL TO 3 PLACES ± ·005 DECIMAL TO 2 PLACES ± ·010 FRACTIONAL ± 1/64	FINISH
DATE 16/7/75	DATE 2.2.77	SCALE / NOT TO BE SCALED	METRIC DIMENSIONS DECIMAL TO 2 PLACES ± 1mm DECIMAL TO 1 PLACE ± 2mm WHOLE DIMENSIONS ∓ 4mm UNLESS OTHERWISE STATED	TITLE

4	5	6
ALL BURRS TO BE REMOVED		NOTES

ISS.	CHANGES
1	RELEASED TO PRODUCTION. IV 12.3.75
2	ECO. 121 TP32, 33 & 34 ADDED IV 27.10.75
8	
9	
10	C104 & C105 WERE .015μF

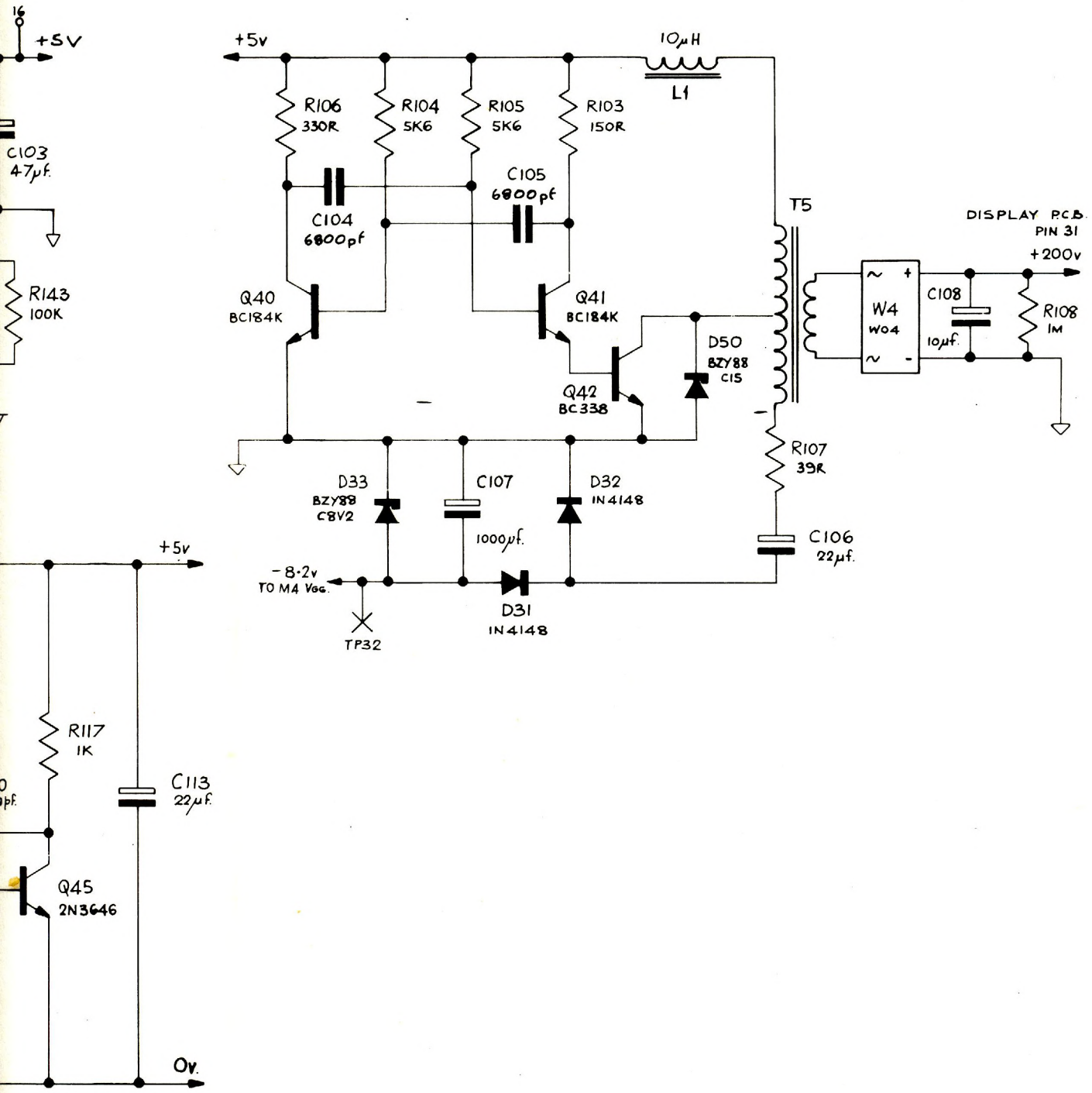

datron ELECTRONICS LTD. NORWICH.

DRAWING SIZE A2

TITLE 1059 A-D (SUPPLIES & CLOCK)

DRAWING No. 430029

SHEET 4 OF 4

DRAWING No.	
400106	
FIRST USED ON	1059

THIRD ANGLE PROJECTION

DRAWN IN ACCORDANCE WITH BS 308

ALL BUR

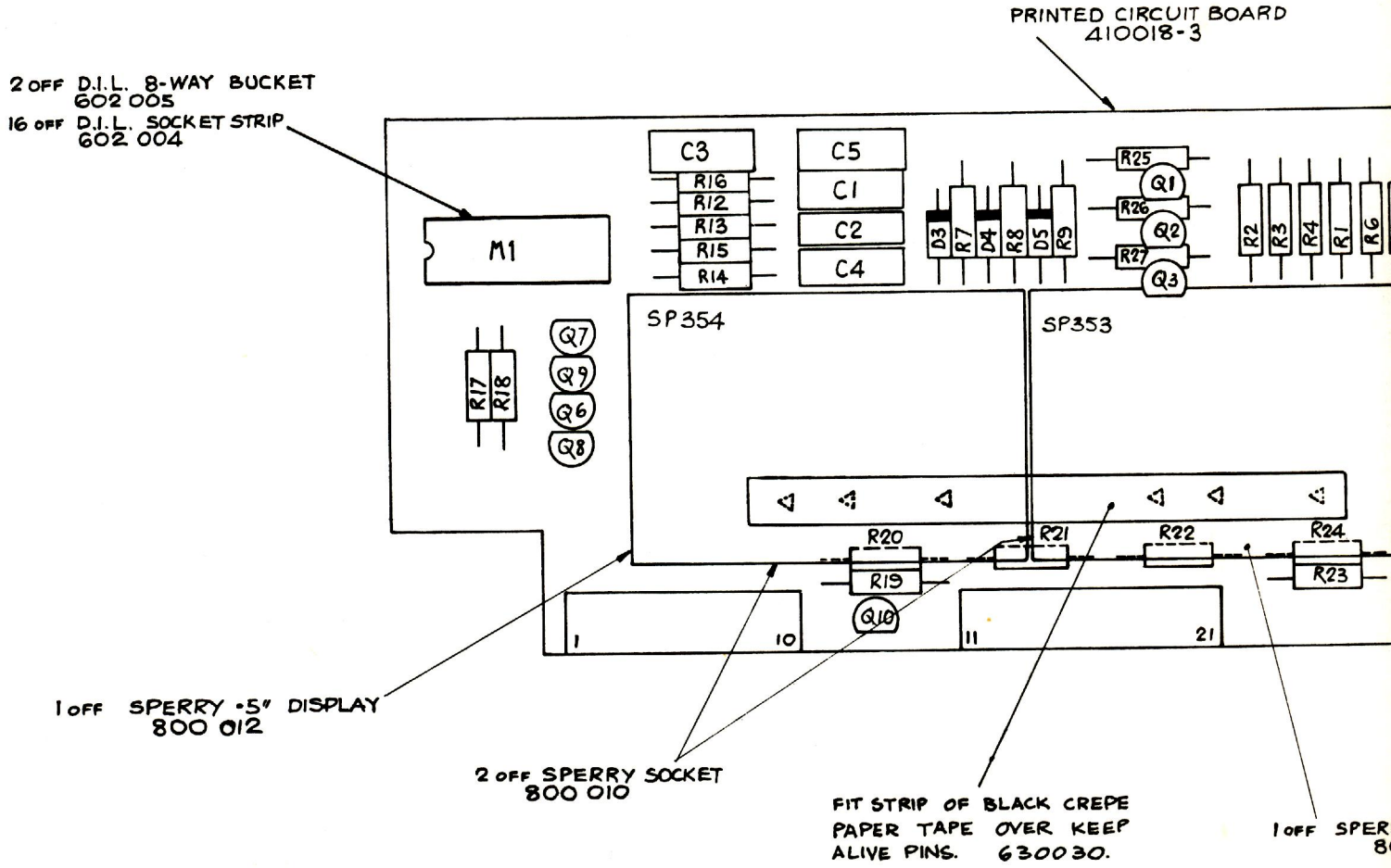

DRAWN	CHECKED	DIMENSIONS IN	TOLERANCES ANGULAR ± ½°	MATERIAL
IV	DCG	MILLIMETRES	INCH DIMENSIONS DECIMAL TO 3 PLACES ± ·005 DECIMAL TO 2 PLACES ± ·010 FRACTIONAL ± 1/64 METRIC DIMENSIONS DECIMAL TO 2 PLACES ± 1mm DECIMAL TO 1 PLACE ± 2mm WHOLE DIMENSIONS ± 4mm UNLESS OTHERWISE STATED	
TRACED	APPROVED	SCALE 2:1		FINISH
DATE 7.10.75	DATE 2.2.77	NOT TO BE SCALED		

J.W.1162

4	5	6
ALL BURRS TO BE REMOVED		NOTES

ISS.	CHANG
1	RELEASED TO IV. 12
2	ECO 319 25. PCB RAISED TO 1

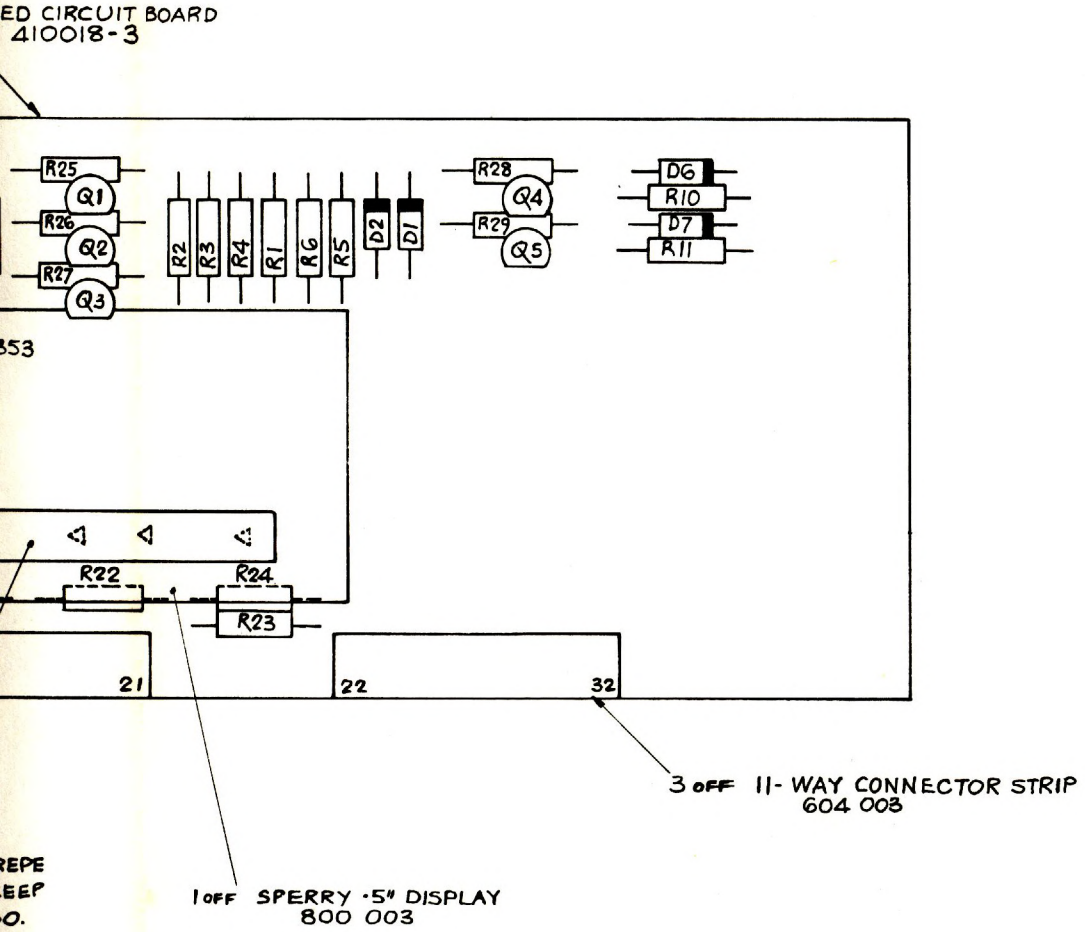

datron ELECTRONICS LTD. NORWICH.

DRAWING S
A2

TITLE
1059 ·5" SPERRY DISPLAY P.C.B. ASSY

DRAWING No.
400106

SH
1

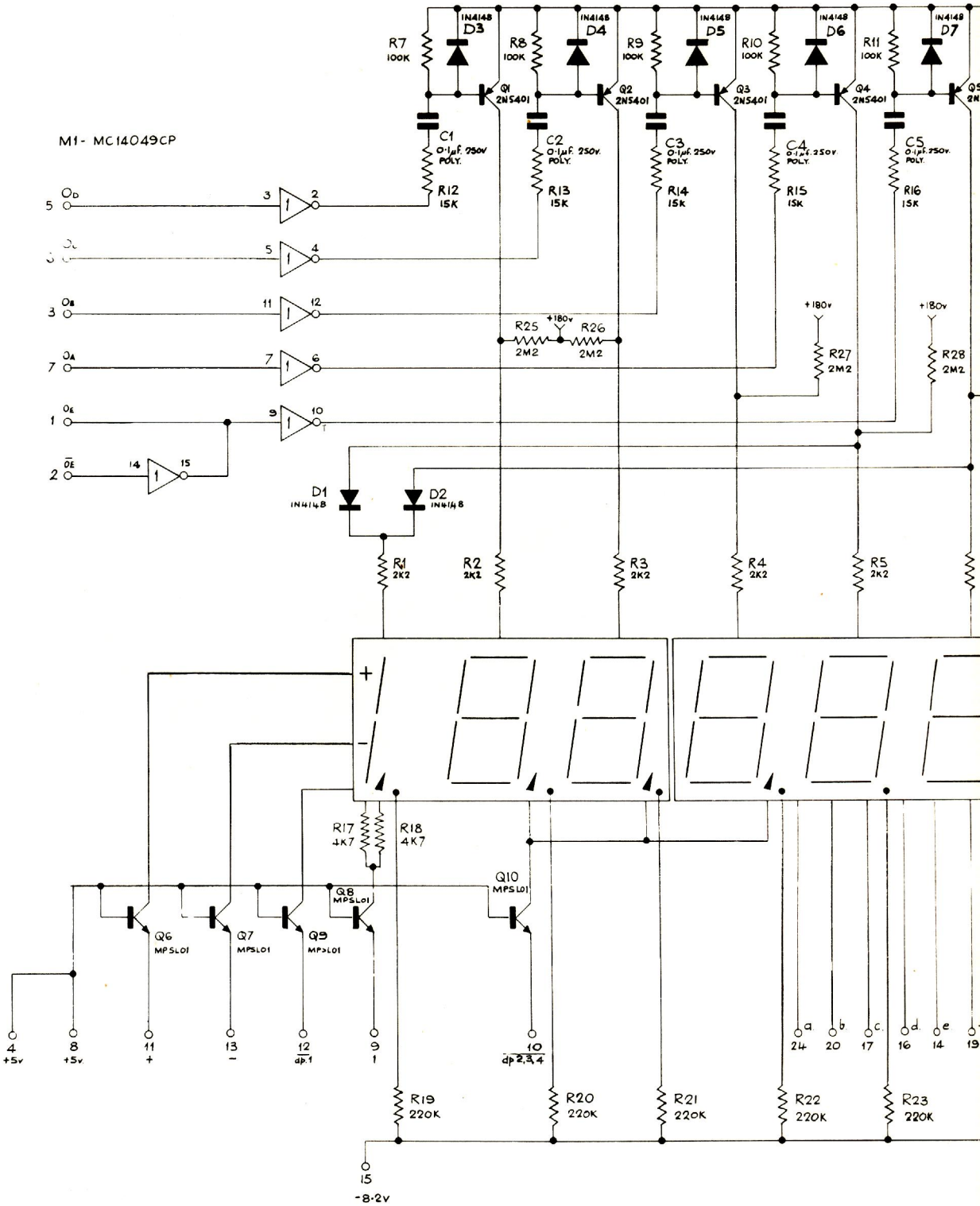
M1- MC14049CP
R7 100K
R8 100K
R9 100K
R10 100K
R11 100K
D3 1N4148
D4 1N4148
D5 1N4148
D6 1N4148
D7 1N4148
Q1 2N5401
Q2 2N5401
Q3 2N5401
Q4 2N5401
C1 0·1μF. 250V POLY.
C2 0·1μF. 250V. POLY.
C3 0·1μF. 250V POLY.
C4 0·1μF. 250V. POLY.
C5 0·1μF. 250V. POLY.
R12 15K
R13 15K
R14 15K
R15 15K
R16 15K
R25 2M2
R26 2M2
+180V
R27 2M2
R28 2M2
D1 1N4148
D2 1N4148
R1 2K2
R2 2K2
R3 2K2
R4 2K2
R5 2K2
R17 4K7
R18 4K7
Q6 MPSL01
Q7 MPSL01
Q8 MPSL01
Q9 MPSL01
Q10 MPSL01
R19 220K
R20 220K
R21 220K
R22 220K
R23 220K
4 +5v
8 +5v
11 +
13 −
12 dp.1
9 1
10 dp.2,3,4
15 -8·2v
a 24
b 20
c 17
d 16
e 14

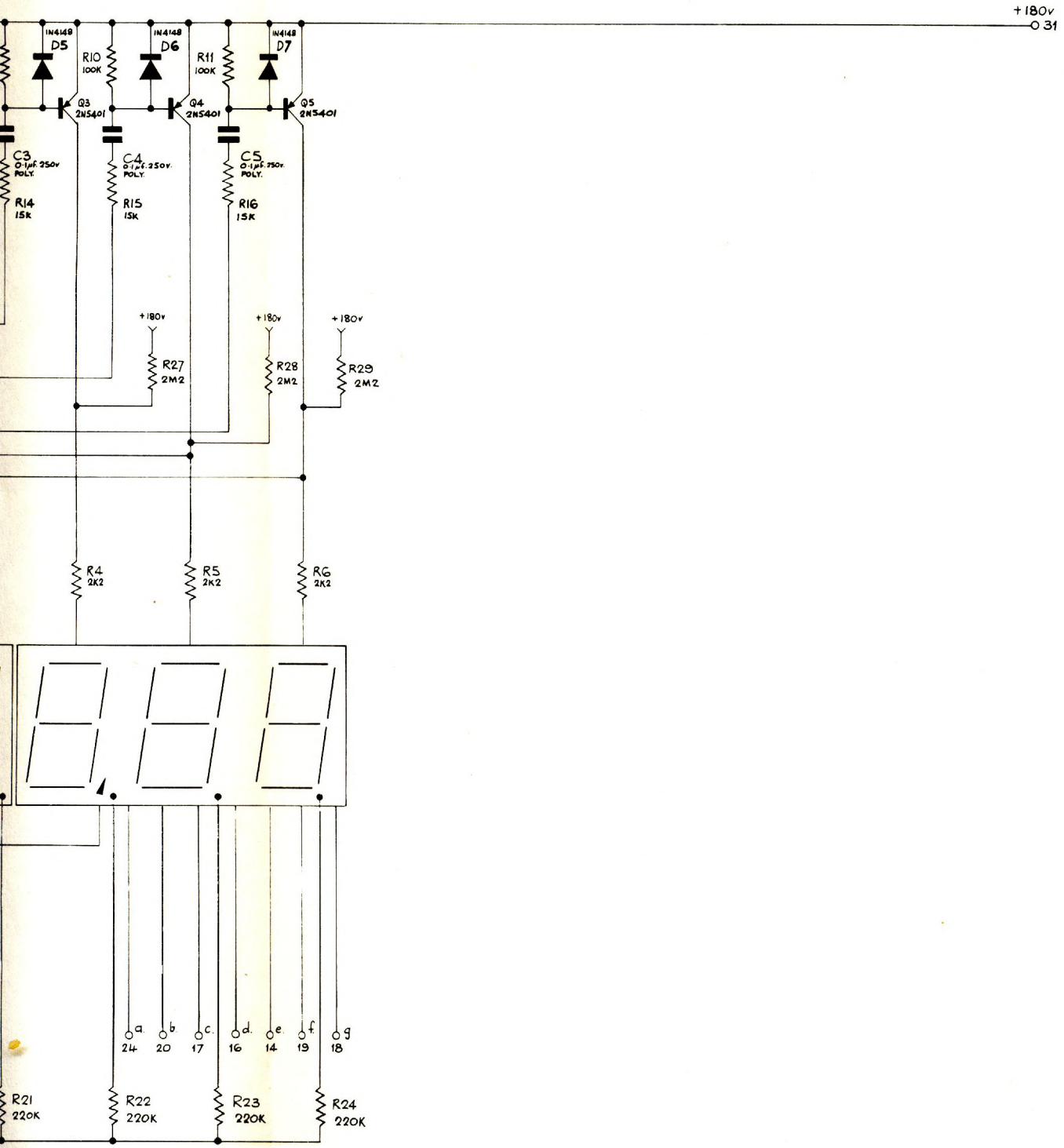

REVISION	DATE	datron ELECTRONICS LTD		
1		R&D. M.J.D. 17.8.76	1059 ·5" SPERRY DISPLAY SCHEMATIC	
		CHECK		
		PROD. L.A.D. 2.2.77	430041	SHEET 1
				OF 1

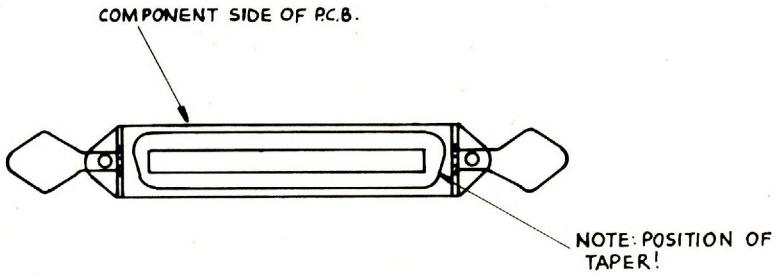

1:1 VIEW ON ARROW 'A' TO SHOW ORIENTATION OF CONNECTOR/P.C.B.

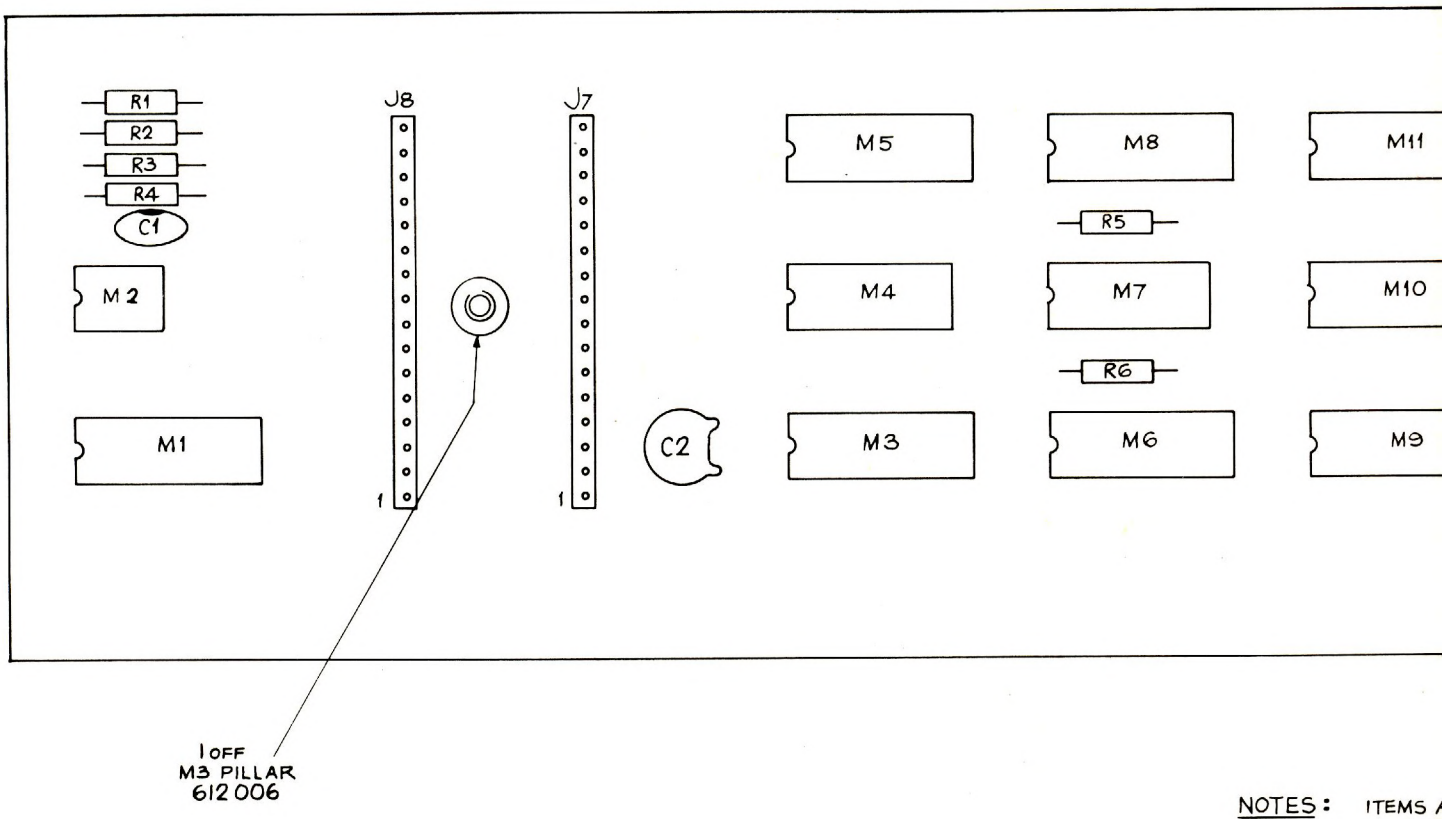

NOTES: ITEMS A
4 O
28 O
252 O
1 OF

DRAWN IV.	CHECKED	DIMENSIONS IN MILLIMETRES	TOLERANCES	MATERIAL	dat
TRACED	APPROVED L.A.B.	SCALE 2:1 NOT TO BE SCALED	METRIC DIMENSIONS DECIMAL TO 2 PLACES ±·1mm. DECIMAL TO 1 PLACE ±·2mm WHOLE DIMENSIONS ±·4mm UNLESS OTHERWISE STATED.	FINISH	TITLE 1059/10
DATE 14. 4. 75	DATE 2.2.77				

ISS	CHANGES
2	ECO 122 GOLD PIN FOR EXT REF LEAD ADDED. CORNER OF BOARD SHOWN CROPPED OFF TV 30/10/75
3	ECO 207 PCB WAS -2 M.J.D. 6.5.76.
4	ECO 234 7.9.76 PT. LT. CHANGE PJH
5	ECO 310 5.11.76 PCB WAS -4 PJH

NOTE: POSITION OF TAPER!

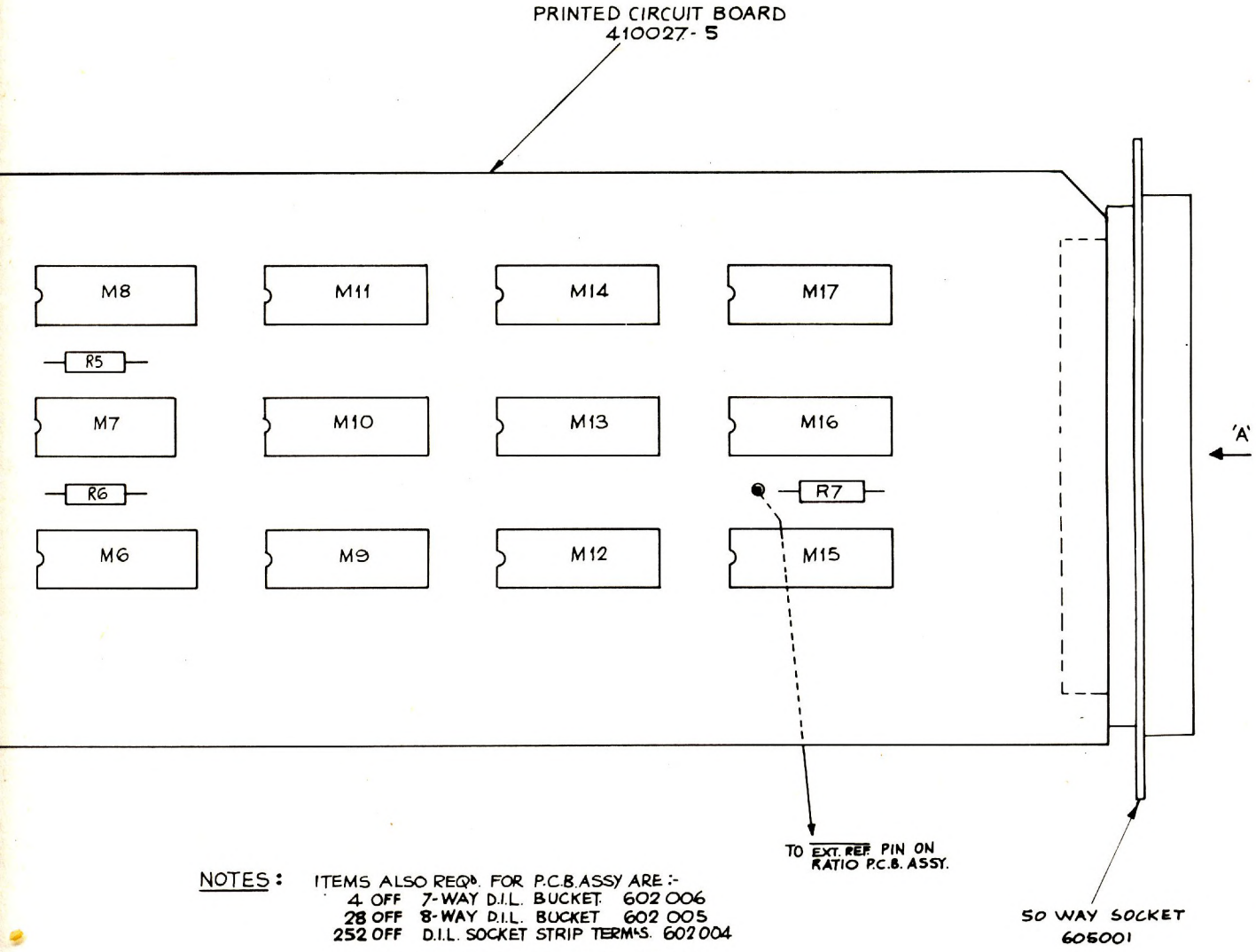

NOTES: ITEMS ALSO REQD. FOR P.C.B. ASSY ARE :-

4 OFF	7-WAY D.I.L. BUCKET	602 006
28 OFF	8-WAY D.I.L. BUCKET	602 005
252 OFF	D.I.L. SOCKET STRIP TERM'S.	602 004
1 OFF	50-WAY. AMP SOCKET	605 001

datron ELECTRONICS LTD., NORWICH

DRAWING SIZE A2

TITLE 1059/1051 B.C.D. OUTPUT P.C. BOARD ASSY.

DRAWING Nº 400095.

SHEET 1 OF 2

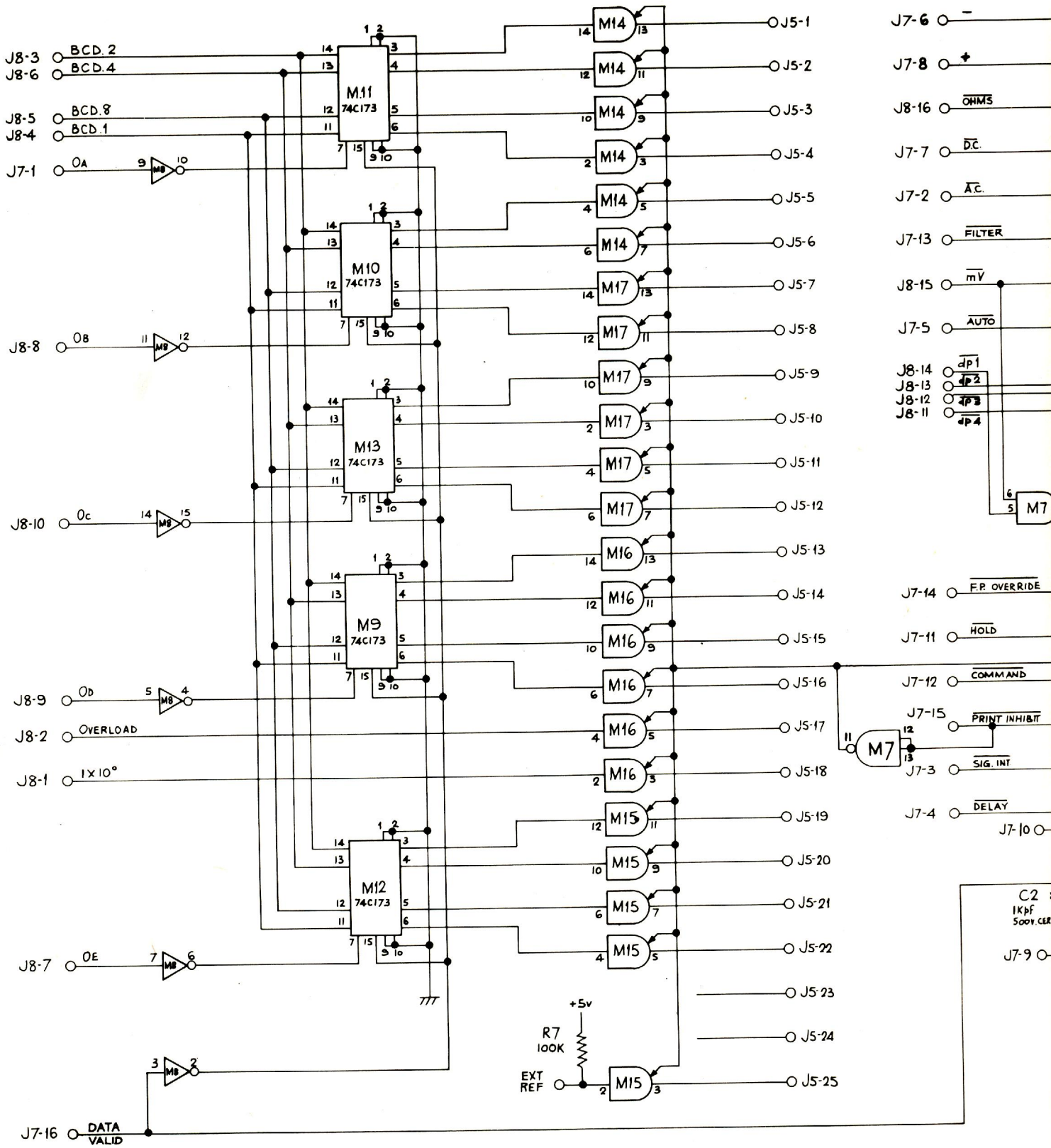

DRAWN I.V.	CHECKED I.M.	DIMENSIONS IN MILLIMETRES	TOLERANCES	MATERIAL
TRACED	APPROVED L.A.D.	SCALE /	METRIC DIMENSIONS DECIMAL TO 2 PLACES ± ·1mm DECIMAL TO 1 PLACE ± ·2mm WHOLE DIMENSIONS ± ·4mm UNLESS OTHERWISE STATED	FINISH /
DATE 11. 4. 75	DATE 2.8.77	NOT TO BE SCALED		

ISS	CHANGES

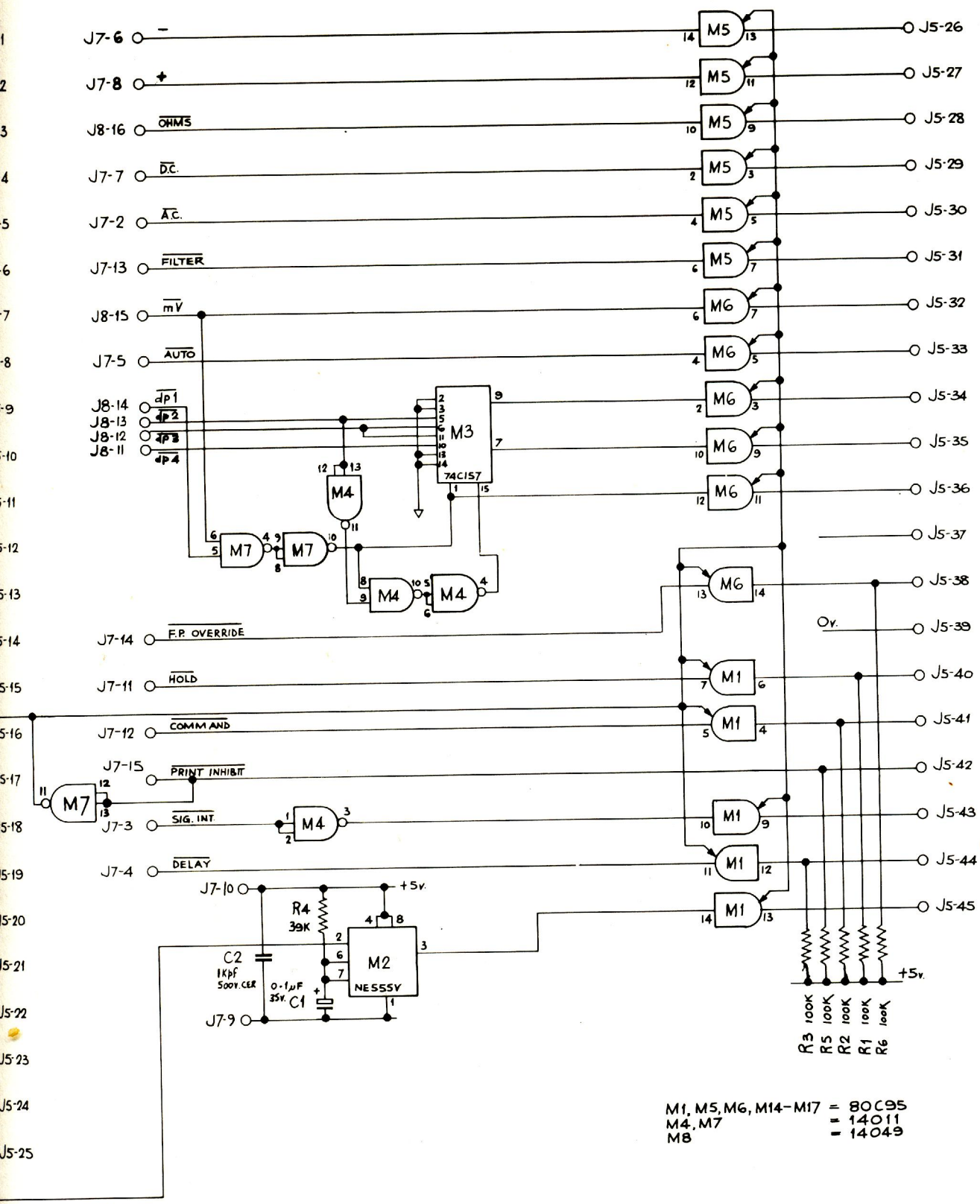

datron ELECTRONICS LTD. NORWICH.		DRAWING SIZE A2
TITLE 1051/1055/1059 B.C.D OUTPUT SCHEMATIC.	DRAWING No 430022	SHEET 1 OF 1

DRAWING No.
400091
FIRST USED ON 1051

THIRD ANGLE PROJECTION

DRAWN IN ACCORDANCE WITH BS 308

ALL BURRS TO

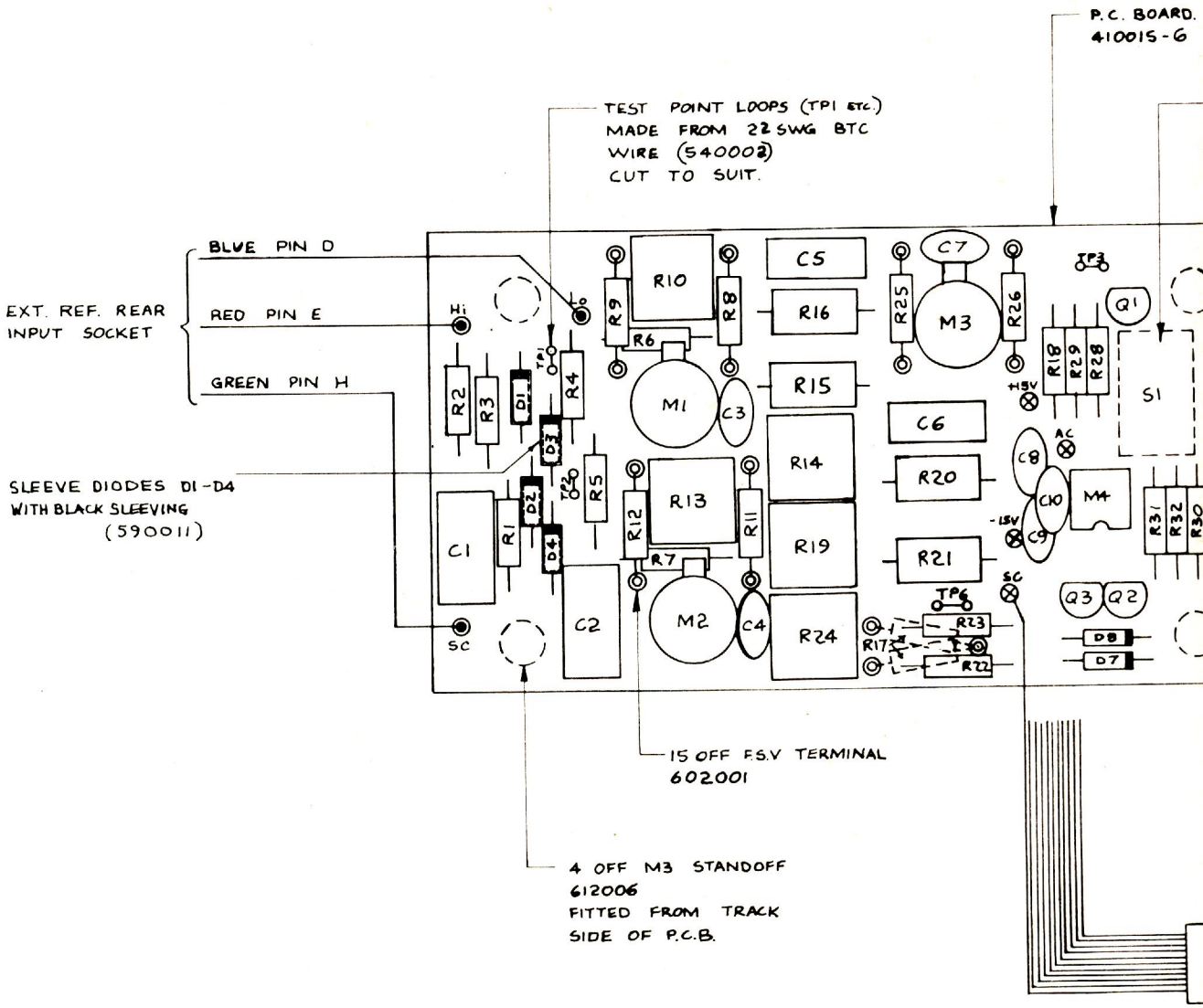

DRAWN	CHECKED	DIMENSIONS IN	TOLERANCES ANGULAR ± ½°	MATERIAL
M.J.D.		MILLIMETRES	INCH DIMENSIONS DECIMAL TO 3 PLACES ± .005 DECIMAL TO 2 PLACES ± .010 FRACTIONAL ± 1/64 METRIC DIMENSIONS DECIMAL TO 2 PLACES ± ·1mm DECIMAL TO 1 PLACE ± ·2mm WHOLE DIMENSIONS ± ·4mm UNLESS OTHERWISE STATED	
TRACED	APPROVED	SCALE		FINISH
	A.A.D.	2 : 1		
DATE	DATE	NOT TO BE SCALED		TITLE
6.2.76	6/76			RAT

J W 1162

4	5	6
ALL BURRS TO BE REMOVED		NOTES

ISS.	CHANGES
3	REDRAWN NEW LAYOUT M.J.D. 6.2.76
4 ECO 205	REVISED TO ISS.6 ARTWORK 10.3.76.
5	D1-D4 SLEEVED ECO 276 DJH

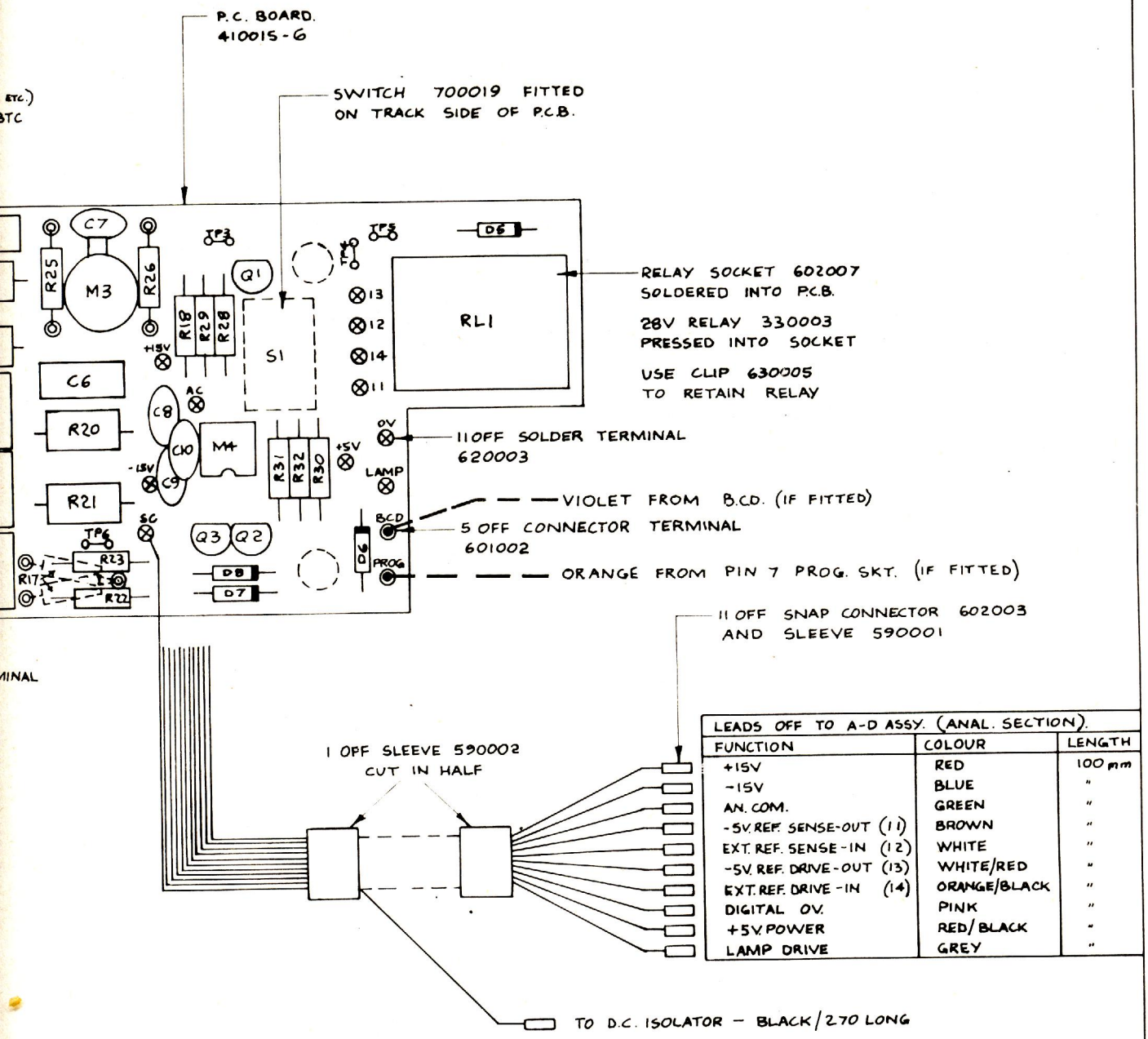

LEADS OFF TO A-D ASSY. (ANAL. SECTION).		
FUNCTION	COLOUR	LENGTH
+15V	RED	100 mm
-15V	BLUE	"
AN. COM.	GREEN	"
-5V. REF. SENSE-OUT (11)	BROWN	"
EXT. REF. SENSE-IN (12)	WHITE	"
-5V. REF. DRIVE-OUT (13)	WHITE/RED	"
EXT. REF. DRIVE-IN (14)	ORANGE/BLACK	"
DIGITAL 0V.	PINK	"
+5V. POWER	RED/BLACK	"
LAMP DRIVE	GREY	"

datron ELECTRONICS LTD. NORWICH.

DRAWING SIZE A2

TITLE RATIO AMP (1V I/P) ASSY. 1059/1051

DRAWING No. 400091

SHEET 1 OF 6

DRAWING No.	
430028	
FIRST USED ON	1051

THIRD ANGLE PROJECTION

DRAWN IN ACCORDANCE WITH BS 308

ALL B

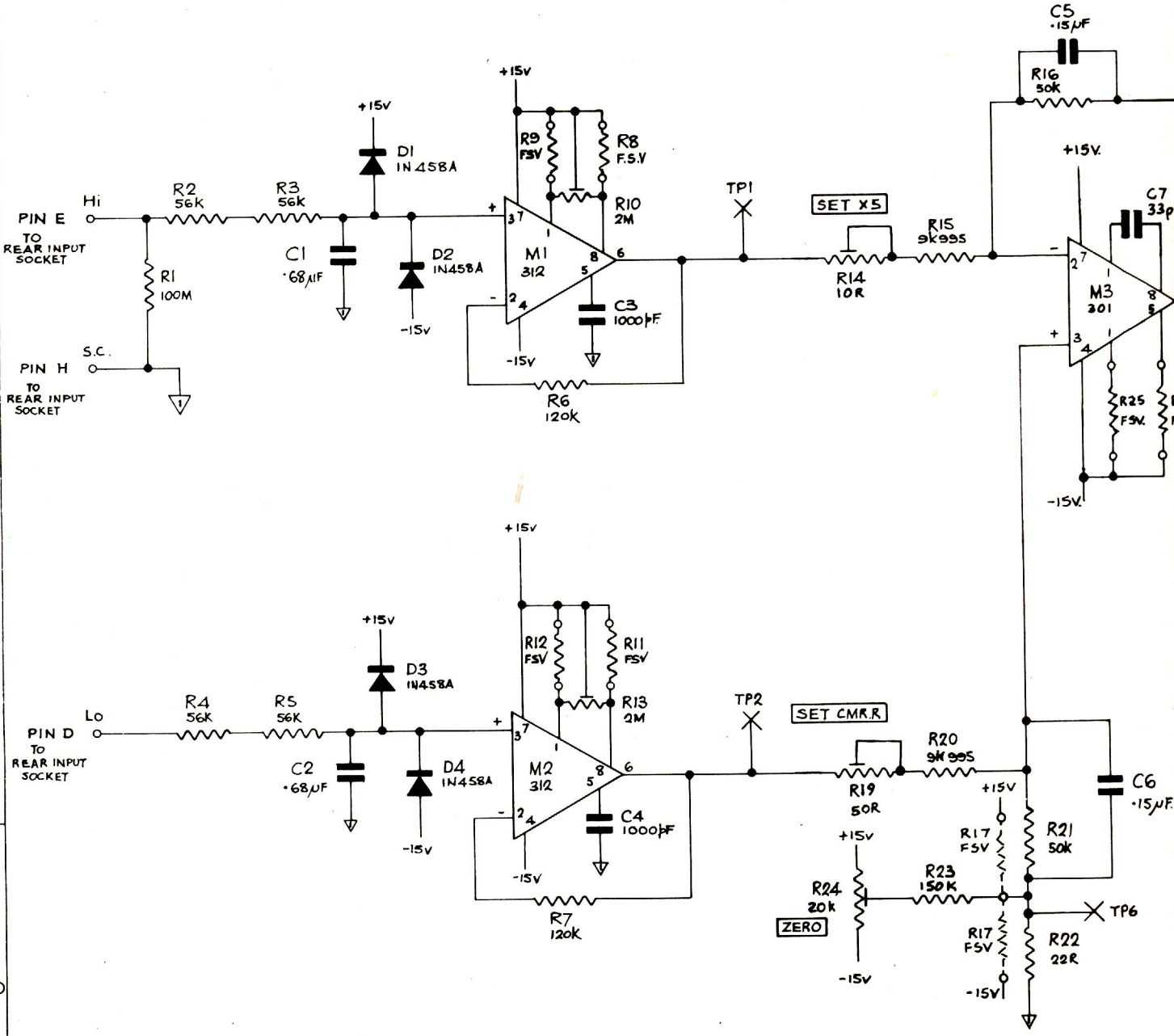

DRAWN	CHECKED	DIMENSIONS IN	TOLERANCES ANGULAR ± ½°	MATERIAL
I.V.			INCH DIMENSIONS	
TRACED	APPROVED L.A.D.	MILLIMETRES	DECIMAL TO 3 PLACES ± ·005 DECIMAL TO 2 PLACES ± ·010 FRACTIONAL ± 1/64	
DATE 5.11.75	DATE 6/76	SCALE / NOT TO BE SCALED	METRIC DIMENSIONS DECIMAL TO 2 PLACES ± 1mm DECIMAL TO 1 PLACE ± 2mm WHOLE DIMENSIONS ∓ 4mm UNLESS OTHERWISE STATED	FINISH /

J W 1162

ISS.	CHANGES
2	ECO 125 REDRAWN
3	D9; R27, 33, 34 DELETED. S1/2 ECO 203 ADDED. R19 WAS 20R MJD. 10.2.76

4 — ALL BURRS TO BE REMOVED

5

6 — NOTES

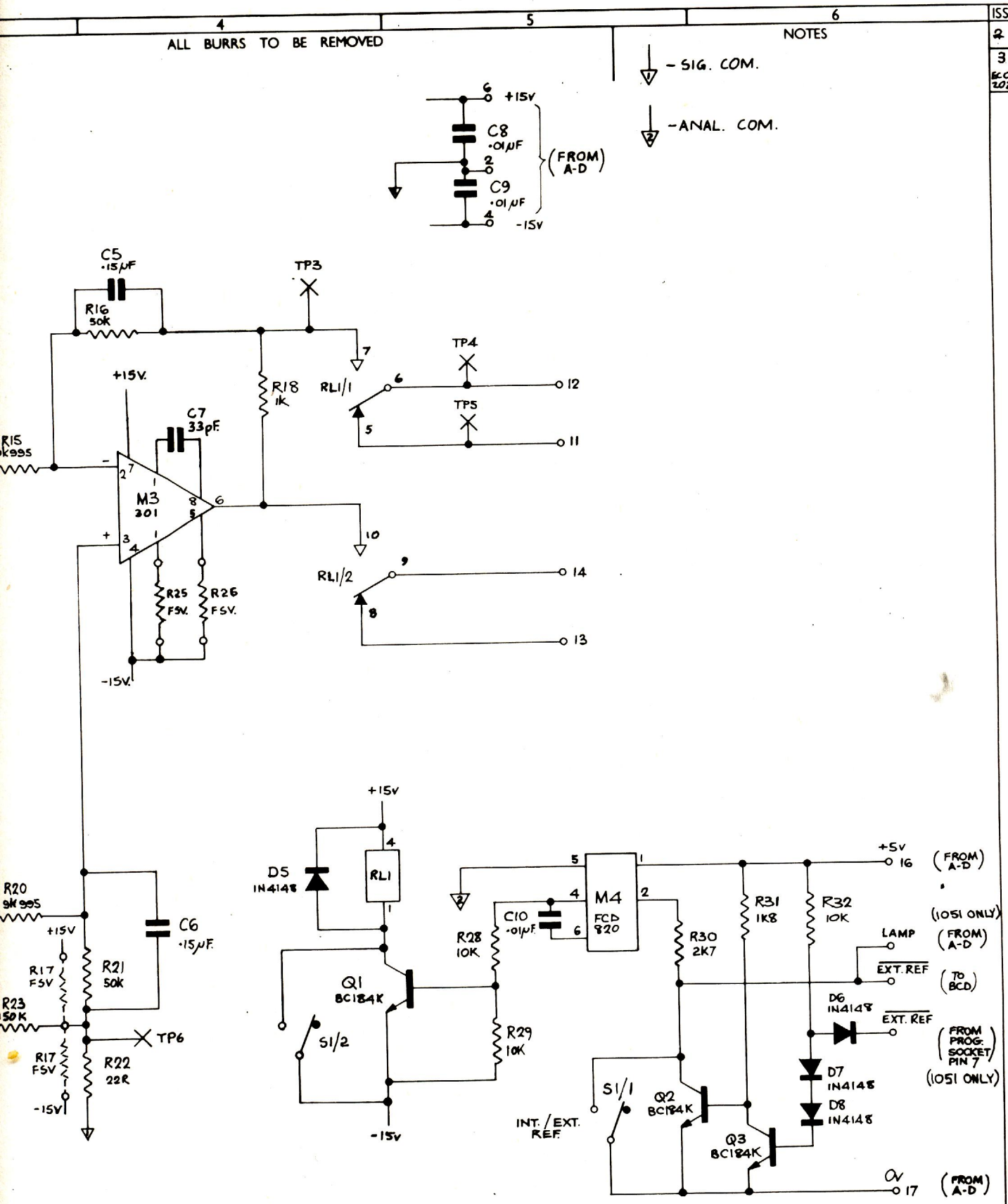

datron ELECTRONICS LTD. NORWICH.

DRAWING SIZE A2

TITLE 1059/1051 - RATIO AMPL. & SWITCHING (lv. I/P)

DRAWING No. 430028

SHEET 1 OF 1

DRAWING No.	
400125	
FIRST USED ON	1051

THIRD ANGLE PROJECTION

DRAWN IN ACCORDANCE WITH BS 308

ALL BURRS TO

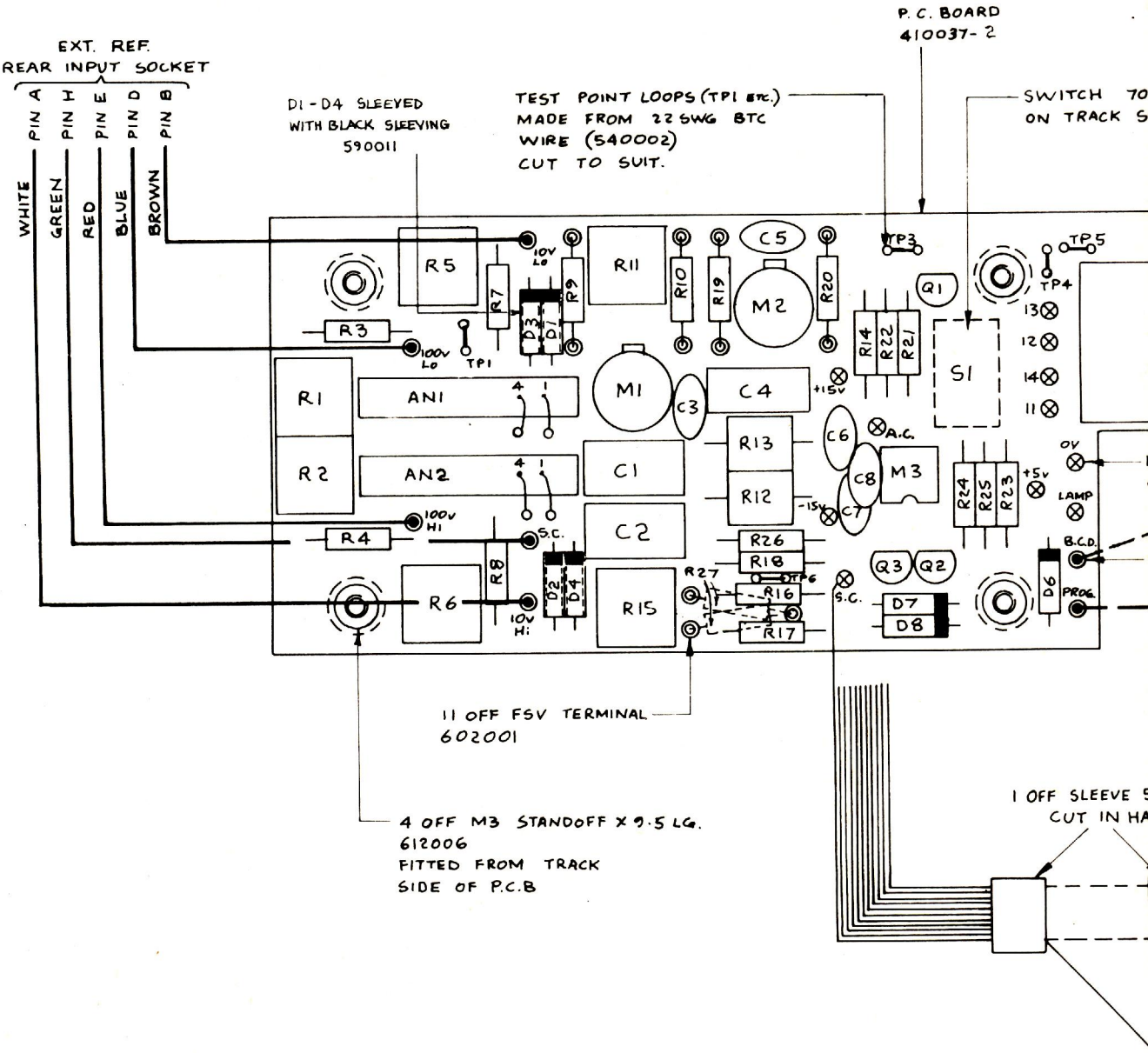

DRAWN	CHECKED	DIMENSIONS IN	TOLERANCES ANGULAR ± ½°	MATERIAL	
M.J.D.			INCH DIMENSIONS DECIMAL TO 3 PLACES ± ·005 DECIMAL TO 2 PLACES ± ·010 FRACTIONAL ± 1/64		
TRACED	APPROVED	MILLIMETRES	METRIC DIMENSIONS DECIMAL TO 2 PLACES ± ·1mm DECIMAL TO 1 PLACE ± ·2mm WHOLE DIMENSIONS ∓ ·4mm	FINISH	TITLE
	L.A.D.	SCALE 2 : 1			RATIO
DATE 27-8-76	DATE 1-9-76	NOT TO BE SCALED	UNLESS OTHERWISE STATED		

4	5	6
ALL BURRS TO BE REMOVED		NOTES

ISS.	CHANGES
2	ECO 269 REDESIGNED M.J.D. 27.8.76
3	ECO 277 14.9.76 DIODES D1-D4 SLEEVED

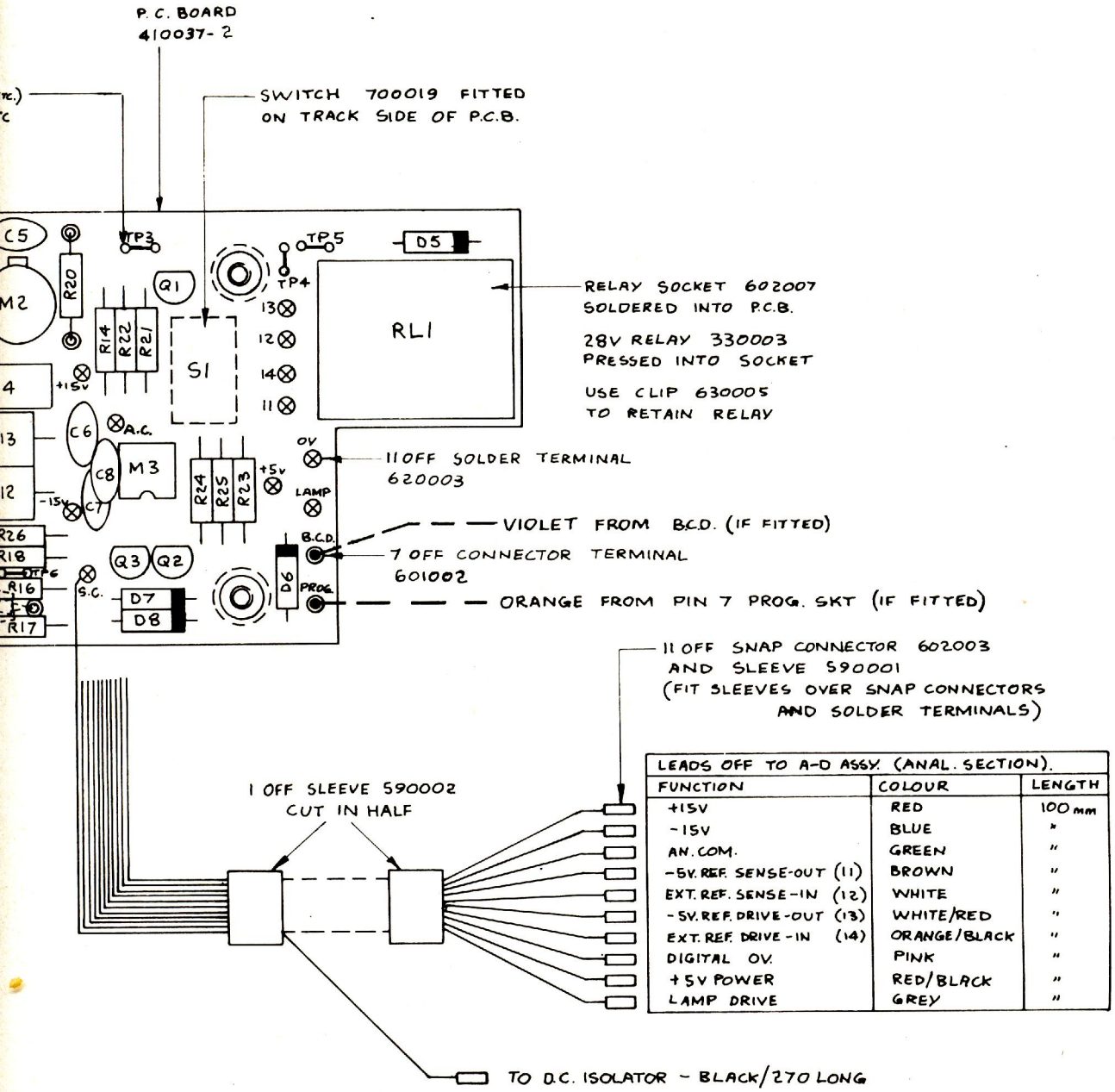

LEADS OFF TO A-D ASSY. (ANAL. SECTION).		
FUNCTION	COLOUR	LENGTH
+15V	RED	100 mm
-15V	BLUE	"
AN. COM.	GREEN	"
-5V. REF. SENSE-OUT (11)	BROWN	"
EXT. REF. SENSE-IN (12)	WHITE	"
-5V. REF. DRIVE-OUT (13)	WHITE/RED	"
EXT. REF. DRIVE-IN (14)	ORANGE/BLACK	"
DIGITAL 0V.	PINK	"
+5V POWER	RED/BLACK	"
LAMP DRIVE	GREY	"

datron ELECTRONICS LTD. NORWICH.

DRAWING SIZE A2

TITLE RATIO AMP (10/100V I/P) ASSY, 1051

DRAWING No. 400125

SHEET 1 OF 1

DRAWING No.	
430032	
FIRST USED ON	1051

THIRD ANGLE PROJECTION

DRAWN IN ACCORDANCE WITH BS 308

ALL BURRS

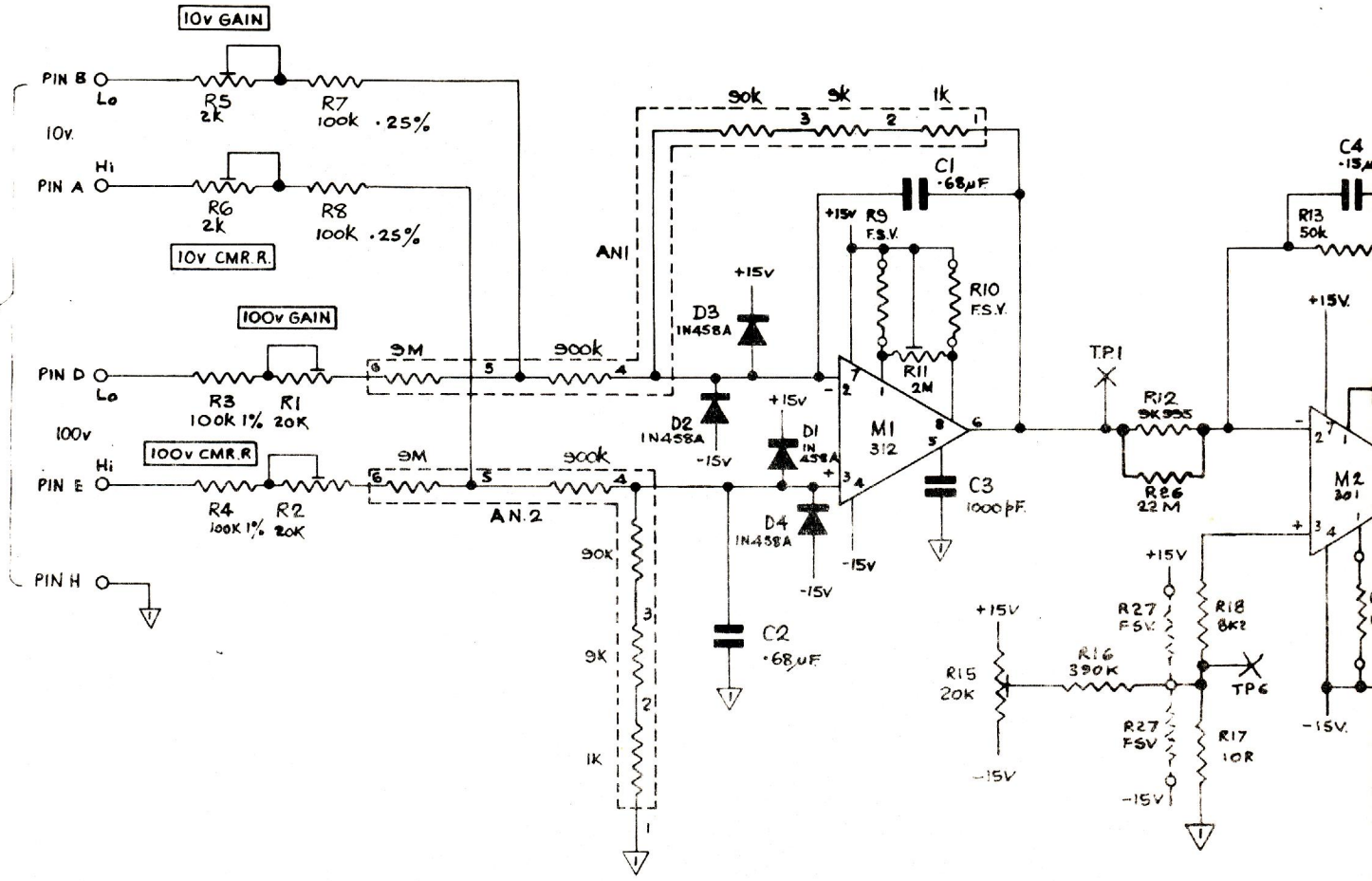

DRAWN	CHECKED	DIMENSIONS IN	TOLERANCES ANGULAR ± ½°	MATERIAL
IV		MILLIMETRES	INCH DIMENSIONS DECIMAL TO 3 PLACES ± ·005 DECIMAL TO 2 PLACES ± ·010 FRACTIONAL ± 1/64	/
TRACED	APPROVED L.A.D.	SCALE /	METRIC DIMENSIONS DECIMAL TO 2 PLACES ± 1mm DECIMAL TO 1 PLACE ± 2mm WHOLE DIMENSIONS ± 4mm	FINISH /
DATE 3.11.75	DATE 2.2.77	NOT TO BE SCALED	UNLESS OTHERWISE STATED	TITLE

JW 1167

4	5	6
ALL BURRS TO BE REMOVED		NOTES

ISS.	CHANGES
1	RELEASED TO PROD. IV 7.11.75
2	ECO 269 REDESIGNED. M.J.D. 31.8.76.

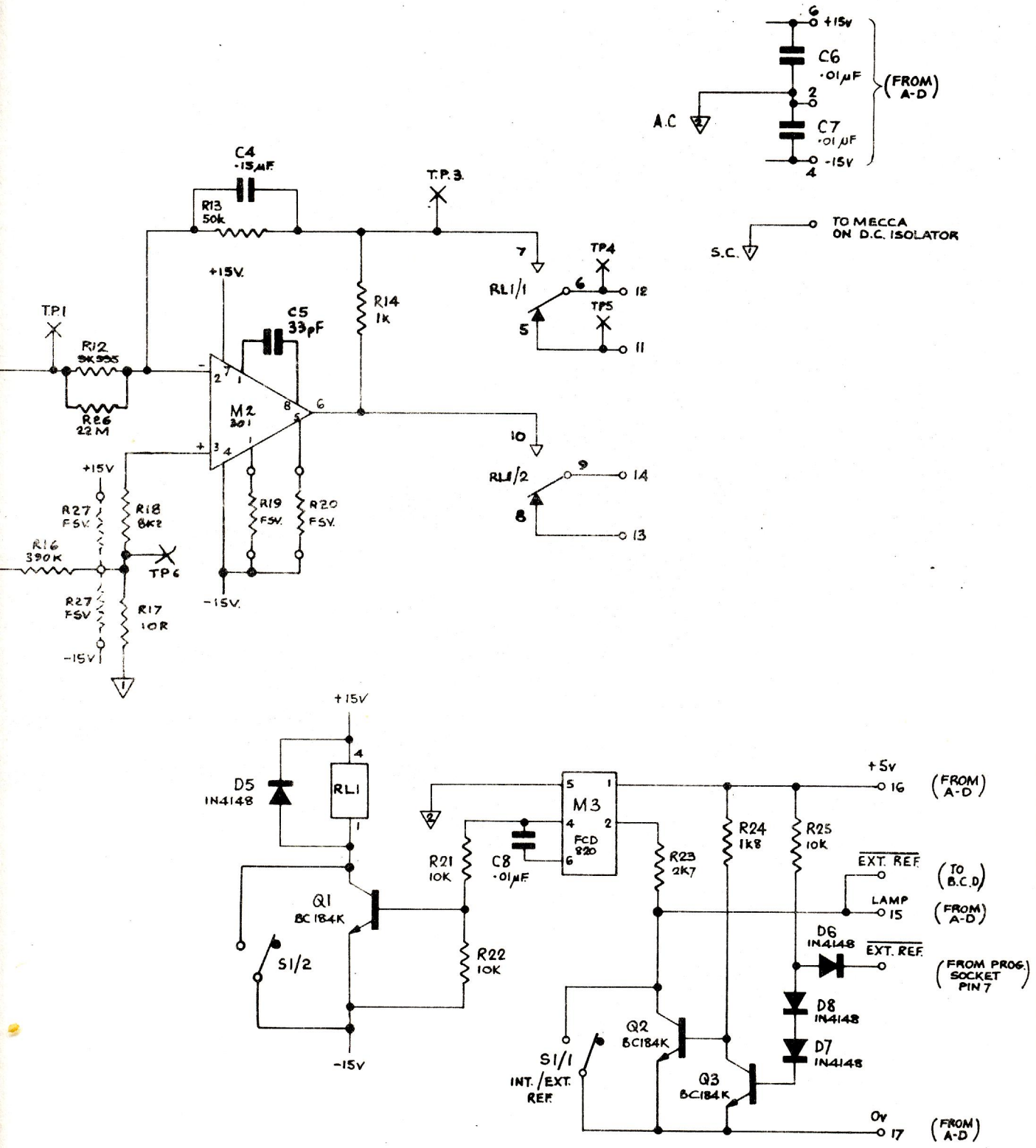

datron ELECTRONICS LTD. NORWICH.

DRAWING SIZE A2

TITLE 1051 – RATIO AMPL & SWITCHING (10v/100v I/P)

DRAWING No. 430032

SHEET 1 OF 1

ADDENDUM AND ERRATA SHEETS INDEX

INSTRUMENT:

SERIAL NO:

Component Parts and Serial Nos.	Associated Update Sheets

Errata sheets:

datron

TO: THE USER

Every effort has been made to ensure that the information supplied with the instrument is accurate and up to date. If, however, you find any errors or have any suggestions for improving this Manual, please return the reply card completed as appropriate.

Full information is available on the complete range of Datron products and we will be pleased to forward these to you on request by return of the reply card completed as appropriate.

Name:

Dept:

Company:

Address:

Correction/Suggestion:

Please send information on the following products:-

- Model 1030 True RMS Digital Voltmeter ☐
- Model 1041 4½ digit Multifunction Digital Voltmeter ☐
- Model 1045 4½ digit DC Digital Voltmeter ☐
- Model 1051 5½ digit Precision Multifunction Digital Voltmeter ☐
- Model 1055 5½ digit DC Digital Voltmeter ☐
- Model 1057 5½ digit Digital Multimeter. ☐
- Model 1059 5½ digit Digital Multimeter ☐

Data Logging Equipment ☐