PHILIPS

RF signal generator

PM 5326

9452 053 26001

Instruction manual

9499 520 08002

790501/2/01–03

PHILIPS

PHILIPS

Instruction manual
Gerätehandbuch
Mode d'emploi et d'entretien

RF signal generator
HF Signal-Generator
Générateur des signaux de H.F.

PM 5326

9452 053 26001

PHILIPS

9499 520 08002

790501/2/01-03

Please note

In correspondence concerning this instrument, please quote the type number and serial number as given on the type plate.

Bitte beachten

Bei Schriftwechsel über dieses Gerät wird gebeten, die Typennummer und die Gerätenummer anzugeben. Diese befinden sich auf dem Typenschild an der Rückseite des Gerätes.

Noter s. v. p.

Dans votre correspondance et dans vos réclamations se rapportant à cet appareil, veuillez toujours indiquer le numéro de type et le numéro de série qui sont marqués sur la plaquette de caractéristiques.

Important

As the instrument is an electrical apparatus, it may be operated only by trained personnel. Maintenance and repairs may also be carried out only by qualified personnel.

Wichtig

Da das Gerät ein elektrisches Betriebsmittel ist, darf die Bedienung nur durch eingewiesenes Personal erfolgen. Wartung und Reparatur dürfen nur von geschultem, fach- und sachkundigem Personal durchgeführt werden.

Important

Comme l'instrument est un équipement électrique, le service doit être assuré par du personnel qualifié. De même, l'entretien et les réparations sont à confier aux personnes suffisement qualifiés.

Issued by Philips GmbH — Werk für Messtechnik

Printed in Germany

CONTENTS

LIST OF FIGURES

Operating manual

1. GENERAL

1.1. INTRODUCTION

The RF signal generator PM 5326 is an instrument of high accuracy. The precise specifications and easy to operate controls make this device suitable for service workshops and education as well as development laboratories. The variety of applications includes telecommunication, radio and television problems.

Based on the phase-locked-loop (PLL) principle the RF carrier is very stable and easy to be set. The frequency is electronically counted (MOS technique) with X-tal reference and 5-digit LED-displayed. So faults in setting and reading which are characteristic for common generators with circular or linear scales are eliminated.

The amplitude of the carrier frequency able to be wobbulated is precise stabilized throughout the whole frequency ranges.

Radiation of the internal generated frequencies possibly escaping the case or the mains cable is utmost reduced by the separate cast RF housing within the instrument. So reliable use of the high attenuation can be made.

The instrument includes a separate swept frequency oscillator (wobbulator), the ranges of which are optimal suited for the common AM/IF, FM/IF, TV/IF and VHF range as well. The wobbulator is overmore used as frequency modulator for the FM/IF and VHF ranges. Together with the wobbulating ranges the center frequency, the width and marker distance of the spectrum is automatically switched over. When a wobbulating range is chosen, the X-tal controlled adjustable reference carrier frequency is used as "travelling marker" for pointing out the response in the band-pass.

The wobbulated or frequency modulated signal is then amplitude stabilised, defined attenuated and fed to the RF output.

The multi-variable applications are pre-determined in the extensive push-button array which in conjunction with the further controls, sockets and the display are all arranged at the frontpanel. The text plate is multi-coloured so indicating the different functions for operating convenience.

The overall electrical and mechanical concept reduces the time for set-up, measurement and evaluation.

1.2. TECHNICAL DATA

General information:

On delivery from the factory, the instrument complies with the safety regulations of measuring and control equipment. The information and warnings contained in this instruction manual must be followed by the user to ensure safe operation and to maintain the instrument in a safe condition.

- Only data with indicated tolerances or limits are guaranteed; data without tolerances are given only for guidance.
- All specifications will be met after a warm-up time of 30 min. when keeping the instrument in a constant mounting position.
- Inaccuracies (absolute or in %) relate to the indicated reference value.

SPECIFICATIONS

1.2.1. RF Generator

Frequency range	0,1 – 125 MHz
Ranges	0,1 – 0,25 MHz 0,25 – 0,5 MHz 0,5 – 1 MHz 1 – 2,5 MHz 2,5 – 5 MHz 5 – 10 MHz 10 – 25 MHz 25 – 50 MHz 50 – 125 MHz
Frequency display	5-digit LED display, red, 11 mm high; 3 decimal points; 2 LEDs for dimension kHz, MHz
Error of the display	$< 10^{-4}$ typical, ±1 digit
Temperature coefficient of the display	$\pm 5 \times 10^{-6}/^{o}C$ at 23 °C ±20 °C
Temperature coeffiecient of the frequency	$< 10^{-5}/^{o}C$

1.2.2. RF Sweep generator

Ranges	.4/.5 MHz 10/11 MHz 36/41 MHz 75/110 MHz
wave form	semi-rectangular

1.2.3. RF output

for all RF ranges and all sweep ranges

Connection:	BNC connector RF OUT
Impedance:	75 Ω
max. output voltage:	50 mV into 75 Ω
Frequency response:	< ± 2 dB (1 dB typ.) for all RF ranges

Attenuator	> 100 dB total 0 – 80 dB continous 3 dB, 40 dB calibrated

1.2.4. Modulation

Modulation modes	see also table in chapter 3.2.
unmodulated	all RF ranges and all sweep ranges
amplitude-modulated, AM	all RF ranges and all sweep ranges
frequency-modulated, FM	sweep ranges 10/11 and 75/110 MHz
Frequency response	< 2 dB in .4/.5 and 10/11 MHz ranges < 0.2 dB in 36/41 and 75/110 MHz ranges
Modulating output MOD OUT	1 kHz sine, 2 V resp. external modulating signal at MOD IN
Amplitude modulation	
unmodulated	all RF ranges and all sweep ranges
AM, internal	all RF ranges and all sweep ranges Modulation frequency: 1 kHz sine Modulation depth: 30 %
AM, external	Modulation depth: 0 – 100 % Modulation coefficient: 200 mV/10 % AM 3 dB band width: 20 Hz – 20 kHz Input impedance: > 10 k Ω
Frequency modulation	10/11 and 75 /110 MHz ranges
FM, internal	Modulation frequency: 1 kHz sine Sweep (Δ f): 22,5 kHz
FM, external	Modulation signal: 20 Hz – 60 kHz (3 dB) Sweep (Δ f): 0 – 75 kHz Modulation coefficient: 200 mV/±7,5 kHz 3 dB band width: 20 Hz – 60 kHz Input impedance: >10 k Ω

1.2.5. Wobbulation

Ranges, wobbulation width	Range	Width (Δ 2 f)
	.4/.5 MHz	0 – 50 kHz
	10/11 MHz	0 – >1 MHz
	36/41 MHz	0 – 10 MHz
	75/110 MHz	0 – 1 MHz
Frequency response	< 0,2 dB in .4/.5 and 10/11 MHz ranges	
Wobble frequency, triangle	3 – 30 Hz, blanking during fly-back	
– Linearity error	< 5 %	
Wobble frequency, sine-wave	50/60 Hz line frequency, phase variable	
Center frequency	adjustable within the full ranges	
Wobbulating output SWEEP OUT		
– Signal	triangle	sine-wave
– Frequency	3 – 30 Hz	50/60 Hz line frequency
– Amplitude	2,5 – 10,5 Vpp	2,5 – 10,5 Vpp
– Impedance	1 k Ω	1 k Ω

1.2.6. Marker generator

prepared by one of the RF SWEEP RANGE buttons (indicator-LED MARKER is illuminated); switched in by button MARKER OFF/ON

variable frequency markers: from RF generator, adjusted frequency on the display

fixed frequencies for adjustable frequency marker spectrum

Range	Marker distance
.4/.5 MHz	10 kHz
10/11 MHz	100 kHz
36/41 MHz	1 MHz
75/110 MHz	100 kHz

Marker	Marker mixing, superposition; (birdy-marker)
Amplitude	2 Vpp
Output	2 loop-through BNC connectors
Impedance	> 500 k Ω

1.2.7. Counter

	PM 5326:	PM 5326 X:
Frequency range	1 – 999.99 kHz	1 kHz – 99.999 MHz
Input voltage	50 mV – 50 V	30 mV – 50 V
Input impedance	1 MΩ	1 MΩ

1.2.8. Power supply

AC mains

Reference value	230 V
Nominal values	115 V/230 V selectable by solder links
Frequency range	48 – 63 Hz
Power consumption	18 W

1.2.9. Environmental conditions

Ambient temperature

Reference value	+ 23 °C ± 1 °C
Nominal working range	+ 5 °C ... +40 °C
Safe operation temperature range	–15 °C ... +55 °C
Limits for storage and transit	–40 °C ... +70 °C

Relative humidity

Reference range	45 ... 75 %
Nominal working range	20 ... 80 %

Air pressure

Reference value	1013 mbar (≙ 760 mm Hg)
Nominal working range	800 ... 1066 mbar (up to 2200 m height)

Air speed

Reference value	0 ... 0.2 m/s
Nominal working range	0 ... 0.5 m/s

Operating position	normally upright on feet or with handle fold down
Warm-up time	30 min.

1.2.10. **Cabinet**

Protection type (see DIN 40 050)	IP 20
Protection class (see IEC 348)	class 1, protective conductor
Overall dimensions	
– height	140 mm
– width	310 mm
– depth	330 mm
Weight	approx. 6.5 kg

1.3. ACCESSORIES

1.3.1. **Standard**

Instruction manual
Fuse 250 mA delayed
PM 9537 Coax cable with impedance transformer 75 Ω/300 Ω

1.3.2. **Optional**

PM 9075 Coax cable BNC – BNC 75 Ω
PM 9072 Coax cable BNC → two 4 mm plugs

1.4. OPERATING PRINCIPLE (FIG. 1)

1.4.1. RF circuitry, amplitude modulation

The RF Generator produces the high frequency. The RF FREQUENCY RANGE push-button array allows selecting the desired range, while the continuous control FREQUENCY SETTING determines the exact frequency.
Via Switching Stage and Amplifier 1 the RF frequency is fed to the Amplitude Modulator passing eihter unmodulated or amplitude-modulated by the internal 1 kHz Oscillator or by extern MOD IN low frequency due to the selected push-buttons MODULATION.
The amplitude of the RF frequency is stabilized in the control circuit Amplitude with automatic gain control AGC in the feedback path.
The Output Amplifier can be interacted by the Output blanking stage: when sweeping with the internal triangle the RF-signal is blanked during fly-back.
The RF ATTENUATION sets the output continuously from 0 to –80 dB, but the RF attenuator overmore has two fixed stages of –3 dB and –40 dB.

1.4.2. Sweep section and frequency modulation

The LF Sweep Generator produces and modulates high frequencies for the sweep ranges .4/.5, 10/11, 36/41, 75/110 MHz, selected by push-buttons RF SWEEP RANGE. The waveform is semi-rectangular.
The carrier for the frequency modulation and the center frequency for the wobbulating ranges respectively are set in Frequency Selection, activated by RF SWEEP RANGE just mentioned and coarse and fine adjusted by the double continuous control RF CENTER.
Pressed button AM/FM activates frequency modulation of the ranges 10/11 or 75/110 MHz with 1 kHz internal or with external signal via MOD IN input socket.
If one of the RF SWEEP RANGE buttons is pressed, the frequency modulated or wobbulated high frequency is fed via the Switching Stage to the main RF output path.
Due to the different frequency ranges the maximum sweep width is adapted by RF SWEEP RANGE. Control RF WIDTH reduces the width.
The sweeping or wobbulating signal and the signal for X-deflexion of an indicator or oscilloscope at the MOD/SWEEP OUT socket can be switched off by push-button SWEEP OFF/ON. In this case the modulating signal is available at the output.

1.4.3. Frequency marker

The Marker Mixer superimposes the frequency of the RF Generator to the swept frequency of the RF Sweep Generator. The low frequency beat is filtered in the Band-pass Filter Amplifier 3 and fed to the OUT-Y-IN socket for the Y-channel of an indicator (oscilloscope). Each frequency of the RF Generator can be used for frequency marker, i. e. "travelling marker".
Pulling the button MARKER AMPL generates fixed markers with many harmonics. The fundamental wave of the fixed marker is selected by RF SWEEP RANGE. So a marker spectrum with suited distance due to the sweep range is generated.
When using triangular sweep mode the square wave output of the LF Sweep Generator blanks the frequency markers in the Marker blanking during fly-back.

1.4.4. Display circuitry

The frequency of the RF-Generator is divided depending on the selected frequency range and fed to the Counter Decoder Driver which is controlled by the Time Base. The Time base, i. e. one measuring period for the counter, is changed by the chosen frequency range. The stage of the counter at the end of one measuring period represents the frequency which is multiplex-displayed on the 5-digit display.
Push-button COUNTER EXT enables the display circuitry working as normal counter. Amplifier 5 feeds the signal at the COUNTER IN socket directly to the counter, decoder and driver.

1.4.5. Power supply

The power supply provides the stabilized DC voltages of +5 V, +12 V, –12 V and +27 V, and the sinusoidal wobbulating voltage.

2. INSTALLATION

2.1. SAFETY REGULATIONS

Upon delivery, the instrument complies with the required safety regulations. To maintain this condition and to ensure safe operation, it is recommended to follow the instructions below.

2.1.1. Before connecting

Mains voltage

Check whether the instrument is adapted to the nominal mains voltage.

Protection

This instrument is protected according to class I (protective earth) of the IEC 348 or VDE 0411. The mains cable provides earth connection. Outside specially protected rooms, the mains plug must be connected only to sockets with earthed contact.

It is not allowed to interrupt the earth connection inside or outside the instrument.

2.1.2. Maintenance and repair

Failure and excessive stress

If the instrument is suspected of being unsafe, take it out of operation permanently.

This is the case when the instrument

- shows physical damage
- does not function anymore
- is stressed beyond the tolerable limits (e. g. during storage and transportation)

Dismantling the instrument

When removing covers or other parts by means or tools, live parts or terminals could be exposed. Before opening the instrument, disconnect it from all power sources.

If the open live instrument needs calibration, maintenance or a repair, it must be performed only by trained personnel being aware of the risks. After disconnection from all power sources, the capacitors in the instrument may remain charged for some seconds, observe the circuit diagrams.

Fuses

Only use the specified fuses.

Repair, Replacing parts

Repairs must be made by trained personnel. Ensure that the construction of the instrument is not altered to the detriment of safety. Above all, leakage paths, air gaps and insulation layers must not be reduced.

When replacing, use only original parts. Other spare parts are only acceptable when the safety precautions for the instrument are not impaired.

2.2. MOUNTING

The instrument may be used in any desired position. With the handle fold down, the instrument may be used in sloping position; for this purpose press the buttons A of the handle (Fig. 2). Do not position the instrument on any surface which produces or radiates heat, or in direct sunlight.

2.3. EARTHING

Before switching on, the instrument must be earthed in conformity with the local safety regulations. The mains cable fixed to the instrument includes a protective conductor, which is connected to the earth contacts of the plug. Thus, when connected to an earthed mains socket, the cabinet of the instrument is consequently connected to the protective earth.

WARNING: Connect the mains cable plug only to a socket with protective earth contacts. This protection must not be made ineffective, e. g. by using an extension cable without earth protection!

The circuit earth potential applied to the external contacts of BNC sockets is connected to the cabinet. The external contacts of the BNC sockets must not be used to connect a protective conductor.

2.4. DISMANTLING THE INSTRUMENT

- Unplug the mains connector
- Fold up the handle to the top. For this push the buttons A (Fig. 2)
- Loosen the central screw at the rear
- Remove the lead-through of the mains cable from the cabinet
- Dismantle the cabinet

2.5. MAINS CONNECTION

The instrument must be connected only to an AC supply. On delivery the instrument is set to 230 V. Before mains connection, ensure that the local mains voltage ranges within the set mains voltage range indicated on the plate at the rear of the instrument.

If the instrument is to be used on 115 V supply, proceed as follows:

- Unplug the mains connector
- Dismantle the instrument, see 2.4.
- Resolder links on the mains transformer in accordance with the stick-on connection diagram. See also below.

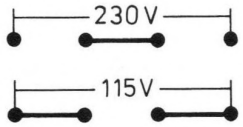

- Insert the supplied fuse 250 mA delayed into the fuse holder instead of the one built-in
- Change the mains voltage plate at the rear of the instrument in accordance with the mains voltage selected. This plate for 115 V is inserted into a plastic cover
- Close the instrument

Mains connection must be made in accordance with the local safety regulations. This implies that the instrument is connected to mains socket with protective earth contact (see para. 2.3.).

3. OPERATING INSTRUCTIONS

3.1. CONTROLS AND SOCKETS (FIG. 2)

	Legend	Position	Function	
3.1.1.	**Frequency**			
	RF FREQUENCY RANGE .1 – ... – 125 MHz	801.2 to 801.10	pushbuttons for selecting the frequency range	
	FREQUENCY SETTING		knob for continuous frequency adjustment	
	RF ATTENUATION 0/30/40 dB		rotary switch for setting the fixed attenuation	
	RF ATTENUATION 0 – 80 dB		knob for continuous attenuation adjustment	
	RF OUT	810	BNC output socket for RF signal	
	Display kHz, MHz		5-digit LED frequency display; 2 LEDs for dimension	
3.1.2.	**Modulation**			
	MODULATION	802	pushbuttons; change-over contacts	
	▙		not pressed	
	▛			pressed
	OFF/ON	802.1	unmodulated	modulated
	AM/FM	802.2	amplitude-modulated	frequency-modulated
	INT/EXT	802.3	internal	external
	MOD IN	816	BNC input socket for external modulation voltage	
	MOD/SWEEP OUT	815	BNC output socket for modulation signal	
	SWEEP RF CENTER	603	dual-knob (coarse, fine) for continuous carrier adjustment	
3.1.3.	**Sweep**			
			pushbuttons; change-over contacts	
	▙		not pressed	
	▛			pressed
	RF SWEEP RANGE	802		
	.4/.5 MHz	802.7		AM – IF
	10/11 MHz	802.8	frequency mod. prepared	FM – IF
	36/41 MHz	802.9		TV – IF
	75/110 MHz	802.10	frequency mod. prepared	FM (band 2)
	SWEEP OFF/ON	802.5		wobbling
	SWEEP ⌃ ~	802.6	triangular wobbling	wobbling at line frequency

	Legend	Position	Function
	SWEEP RF CENTER	603	dual-knob (coarse, fine) for continuous adjustment of the centre frequency of the wobbling range
	SWEEP RF WIDTH	604	knob for continuous adjustment of the wobbling width
	SWEEP LF FREQUENCY PHASE	601	knob for continuous frequency adjustment on triangular wobbling or phase adjustment on wobbling at line frequency
	SWEEP LF AMPLITUDE	602	knob for continuous adjustment of the wobbling voltage
	SWEEP OUT	815	BNC output socket for the wobble signal
3.1.4.	**Frequency markers**		
	MARKER OFF/ON	802.4	pushbutton for operation with frequency markers
	MARKER		LED for operation with markers
	MARKER AMPL	605	knob for continuous adjustment of marker amplitude
	PULL FOR FIXED MARKERS	605	pull switch for adding fixed frequencies
	IN–Y–OUT	813, 814	2 BNC sockets: – output socket for marker signal – mixing device for superposition of test object output signal with marker signal
3.1.5.	**Counter**		
	COUNTER EXT	801.1	commutator for frequency counter mode
	COUNTER IN	812	BNC counter input socket
3.1.6.	**1 kHz sine-wave generator**		
	MOD/SWEEP OUT	815	BNC output socket for 1 kHz sine wave
3.1.7.	**Triangle generator**		
	SWEEP OUT	815	BNC output socket for triangle signal of sweep generator
	LF AMPLITUDE	602	knob for continuous amplitude adjustment
3.1.8.	**Power supply**		
	POWER ON o ● OFF	851	mains switch: white dot for ON position

3.2. OPERATION AND APPLICATION

Mode of operation – Betriebsarten – Mode d'operation

pushbutton range MHz	counted and displayed	MODULATION OFF ON	MODULATION AM FM	MODULATION INT EXT	WOBBULATION var. mark.	WOBBULATION var. mark. spectrum	MARKER GENER. frequency	MARKER GENER. carrier frequency
.1 – .25	●	●	●	●			OFF ON ●	AMPL PULL ●
.25 – .5	●	●	●	●			●	●
.5 – 1	●	●	●	●				
1 – 2.5	●	●	●	●				
2.5 – 5	●	●	●	●				
5 – 10	●	●	●	●			●	●
10 – 25	●	●	●	●			●	●
25 – 50	●	●	●	●			●	●
50 – 125	●	●	●	●			●	●
								marker distance
.4/.5		●	●	●	●	●		10 kHz
10/11		●	● o	●	●	●		100 kHz
36/41		●	●	●	●	●		1MHz
75/110		●	● o	●	●	●		100 kHz
1 – 999.99 kHz	COUNT. EXT.							
	Fig. 7	3	4	4	5	6	5	6

3.2.1. RF signal generator, unmodulated

All push-buttons are off except the concerning one of the RF FREQUENCY RANGE (fig. 3). The figure only contains the controls, function blocks, inputs and outputs which take active part of the applications.

3.2.2. RF signal generator, amplitude modulated

As 3.2.1., button MODULATION OFF/ON pressed. The set carrier is modulated by 1 kHz to 30 % depth.

As 3.2.2., button MODULATION IN/EXT pressed. The set carrier is modulated by the NF voltage fed in via MOD IN. At socket MOD OUT the external modulating voltage is available.

3.2.3. RF signal generator, frequency modulated

All push-buttons are off except the concerning one of the RF SWEEP RANGE 10/11 or 75/110 and the buttons for modulation OFF/ON and AM/FM (fig. 4). The carrier, fixed or to be set , is frequency modulated by 1 kHz.

As 3.2.3. and button MODULATION IN/EXT pressed. The set carrier is frequency modulated by the NF voltage, fed in via MOD IN. At the socket MOD OUT the NF voltage is available.

Note!
Adjustment of the carrier frequency see fig. 4

3.2.4. Wobbulator with variable frequency marker

All push-buttons are off except the concerning one of the RF SWEEP RANGE, SWEEP OFF/ON and MARKER OFF/ON (fig. 5). It is swept about the center frequency, which is chosen by button RF SWEEP RANGE and set by RF CENTER. The sweep width is pre-determined due to the range and can be varied by control RF WIDTH.

The sweep frequency of the ∧LF signal is set by LF FREQUENCY. During fly-back the output amplifier and marker mixer are blanked. During sweep the marked band-pass can be seen on an indicator. The altitude of the marker is set by the MARKER AMPL control.

As in the first chapter 3.2.4. In addition button SWEEP∧/∼pressed. It is wobbulated at line frequency (sine). The output and the marker signal are not blanked during fly-back. Sweep and fly-back curves are identically covered by the PHASE control. The X-channel of the indicator is fed in via SWEEP OUT output. The scale-factor is set by LF AMPLITUDE; see 3.3.6.3.

3.2.5. Wobbulator with travelling marker and coupled marker spectrum

According to 3.3.4. with additionally pulled turn-knob MARKER AMPL. (fig. 6)

3.2.6. Frequency counter

All push-buttons off except COUNTER EXT (fig. 7).

3.2.6.1. In this mode of operation the center frequency of the RF sweep generator can directly be measured in range .4/.5 and adjusted by means of button CENTER. For this connect the sockets RF OUT and COUNTER IN and push the button .4/.5.

3.2.7. 1 kHz sine-wave generator

All push-buttons off except MODULATION OFF/ON; the signal is fed to the MOD/SWEEP OUT socket (fig. 7).

3.2.8. Triangle generator

All push-buttons off except SWEEP OFF/ON and one of the buttons RF SWEEP RANGE. The frequency is set by LF FREQUENCY, the amplitude by LF AMPLITUDE. The signal is available at SWEEP OUT (fig. 7).

3.3. APPLICATION EXAMPLES

3.3.1. General measuring principle

Due to the fact that the output voltage is accurate and stable over a large range, gain and sensitivity can be conveniently measured. It is possible to apply the method of "continuous signal supply" by keeping the output level constant, or the method of "signal tracing". The choice depends mainly on the importance either of the non-reactive signal supply or of the signal decoupling with low detuning. The first method is subject to matching problems, the second to detuning phenomena.

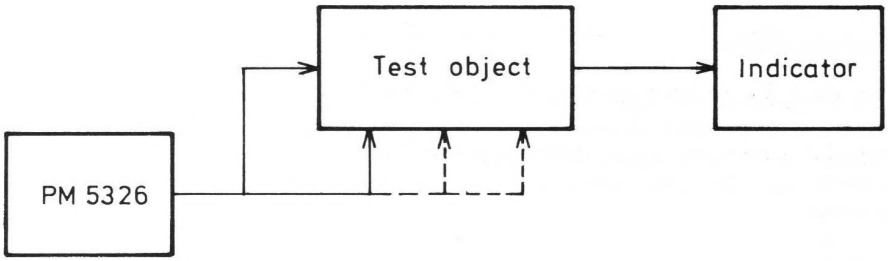

Fig. 3.3-1 Continuous signal supply

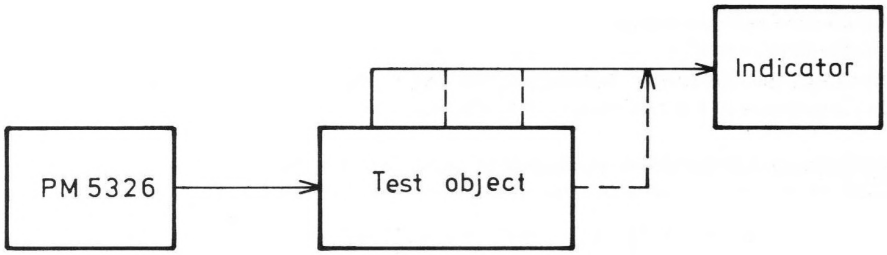

Fig. 3.3-2 Signal tracing

Usually the transmission characteristic of a selective test object is measured statically, i.e. point by point.

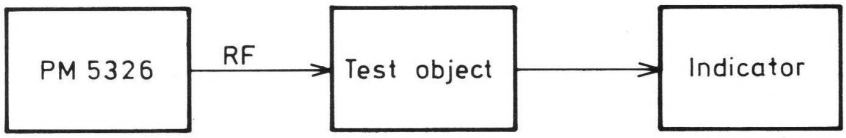

Fig. 3.3-3 Static measuring method

The static method gives very reliable results, but takes much time. As mostly only the shape must be determined and not the absolute values of the transmission characteristic, the dynamic method (wobbling) is generally preferred.

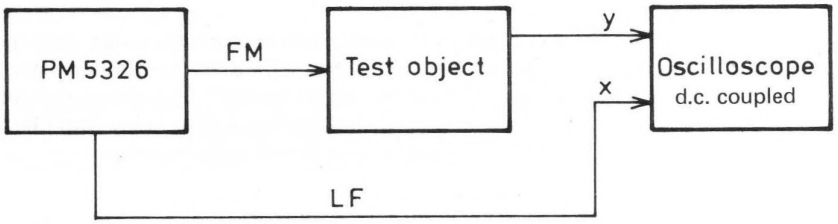

Fig. 3.3-4 Dynamic measuring method

3.3.2. Mains connection, general

Connect the RF-generator PM 5326 according to para. 2.5. of the Instruction Manual. The test object should be connected to mains via an isolating transformer. Only one test object may be connected to this transformer at the same time. When measuring all-mains receivers or TV sets, an isolating transformer must be used. Correctly connect the chassis of the test object to earth. Avoid double earthing of the test setup.

3.3.3. Connection of RF generator

It is recommended to observe always the checking and adjusting procedures given by the manufacturer of the test object (see fig. 3.3-20).
The test object may be connected to the RF generator via the cables mentioned below. These cables are optional:
PM 9072: cable BNC – 4mm plugs
PM 9075: cable BNC – BNC
In the FM range, the impedance transformer PM 9537 adapts the output impedance of the generator to the input impedance of the test object; 75Ω /300Ω .

In the AM range, a dummy aerial according to fig. 3.3-5 may be used to simulate the impedance of an AM aerial.

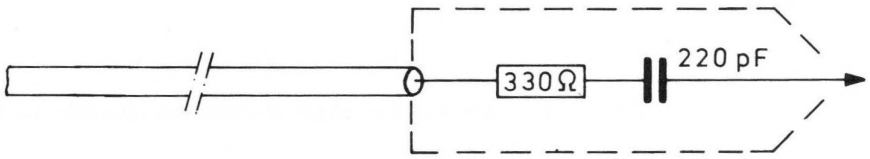

Fig. 3.3-5 Dummy aerial for AM range

Due to the low input impedance of a modern AM receiver, an isolating capacitor of 30 nF must be connected to its IF input. This capacitor must be mounted directly at the end of the cable, as with the PM 9072, for example.

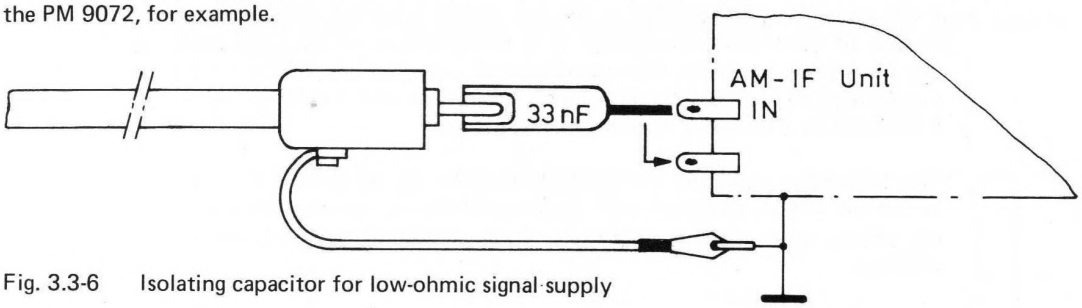

Fig. 3.3-6 Isolating capacitor for low-ohmic signal supply

Unit	via C	Δf	f_{wob}
AM–IF	33 nF	20 kHz	50 Hz
FM–IF	10 nF	200 kHz	50 Hz
FM–Tuner	direct	200 kHz	50 Hz
Selectivity	direct	200 kHz	10 Hz $\wedge$

For defined signal decoupling with low detuning and damping, a probe with damped resonant circuit can be used as attenuator. The coil of this circuit is tapped at the ratio of 10/1, thus transforming the resonant voltage downward during signal decoupling. The L/C ratio must be optimized for AM-IF and FM-IF with particular regard to coil losses.

For application in the AM-IF range, for example, the capacitive detuning is eliminated by means of the trimmer and by tapping the medium and high-ohmic potentials of the test object.

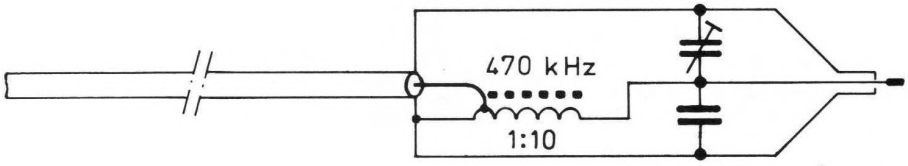

Fig. 3.3-7 Probe with selective voltage divider

3.3.4. Automatic gain control AGC of test object

To prevent incorrect measurements, it is necessary to test the efficiency and set-in level of AGC of the test object. Measuring results obtained at too high levels without suppression of AGC, are subject to considerable errors. This applies to wobbling, as well as to static methods.

It is common practice to adequately fix the sliding DC voltage of AGC to a constant DC voltage from a low-ohmic source. This can be achieved by an adjustable DC supply (e. g. PE 1535 or PE 1537), if the controlling DC voltage of the test object is related only to the chassis without being isolated. In case of conductive hum-pickup, it is recommended to use a dry battery or an accumulator and to tap the voltage by means of a potentiometer connected in parallel to the battery. The output of such a potentiometer circuit becomes more low-ohmic with moderate battery load, if the potentiometer is followed by a transistor ermitter-follower stage.

The connection point and the voltage level to be set are given in the checking and adjusting procedures of the test object. Receivers with suppressed (delayed) control set-in point produce acceptable measuring values, when working below the set-in point during measurement, so that the control is not effective.

3.3.5. Type and connection of indicator

The following indicators can be used: multi-purpose instruments, calibrated signal tracers, selective μV- or mV-meters, broadband voltmeters, oscilloscopes, wobble indicators and x/y recorders.

3.3.5.1. Connection to LF output

With supply of modulated signals, it is possible to connect indicators to LF outputs. The loudspeakers are replaced by resistors. Adjust the operating controls: volume to medium level, bass control to maximum, treble control to maximum, bandwidth to narrow.
With several LF channels, connect the indicator to the bass channel.

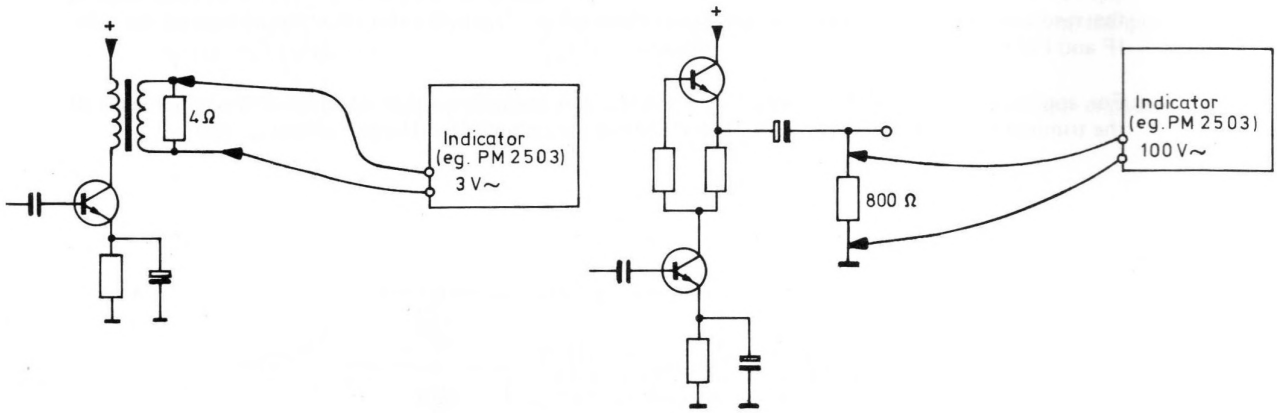

Fig. 3.3-8 Connecting indicator to LF output

3.3.5.2. Multi-purpose instruments

can be used as indicators of rectified currents of demodulators in AM and FM receivers and as limiters with FM receivers and TV sets.

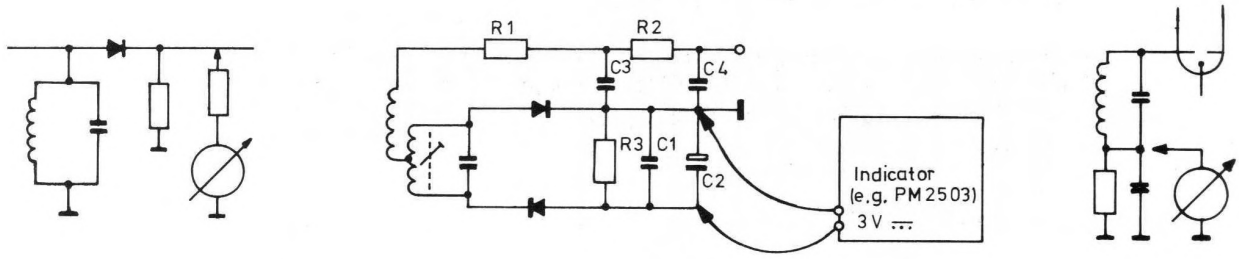

Fig. 3.3-9 Connection to AM, FM demodulators or FM limiter

3.3.5.3. For determining the gain of the IF stage

in AM receivers, the HF signal must be decoupled. This can be achieved by means of a voltage divider probe (ratio of 10 : 1, for example) with low detuning and damping. The resonant circuit probe, described before, is also suited.

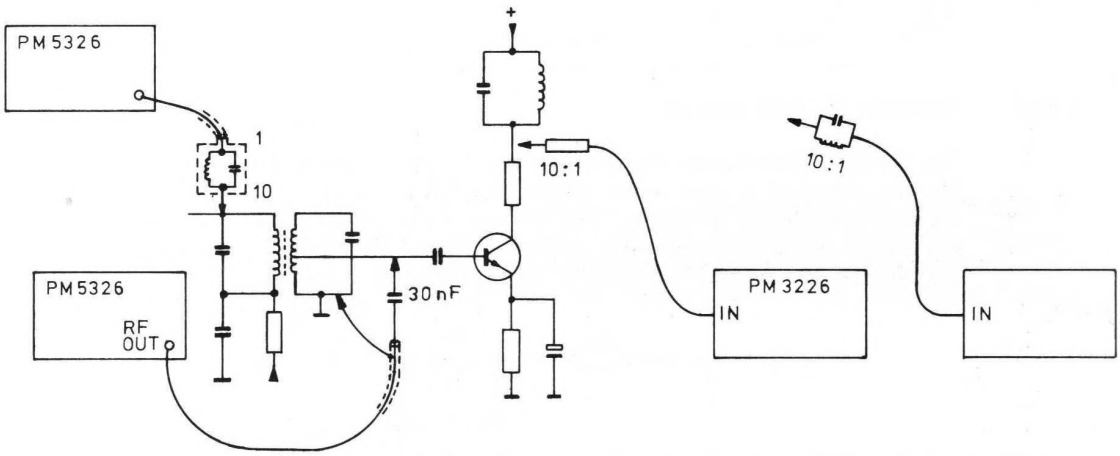

Fig. 3.3-10 Determination of gain of an AM stage

3.3.5.4. Adjusting overcritical coupled band filters

The mostly overcritical coupled band filters in the FM-IF amplifier must be damped and adjusted alternately. The connection wires of the damping resistor should be as short as possible.

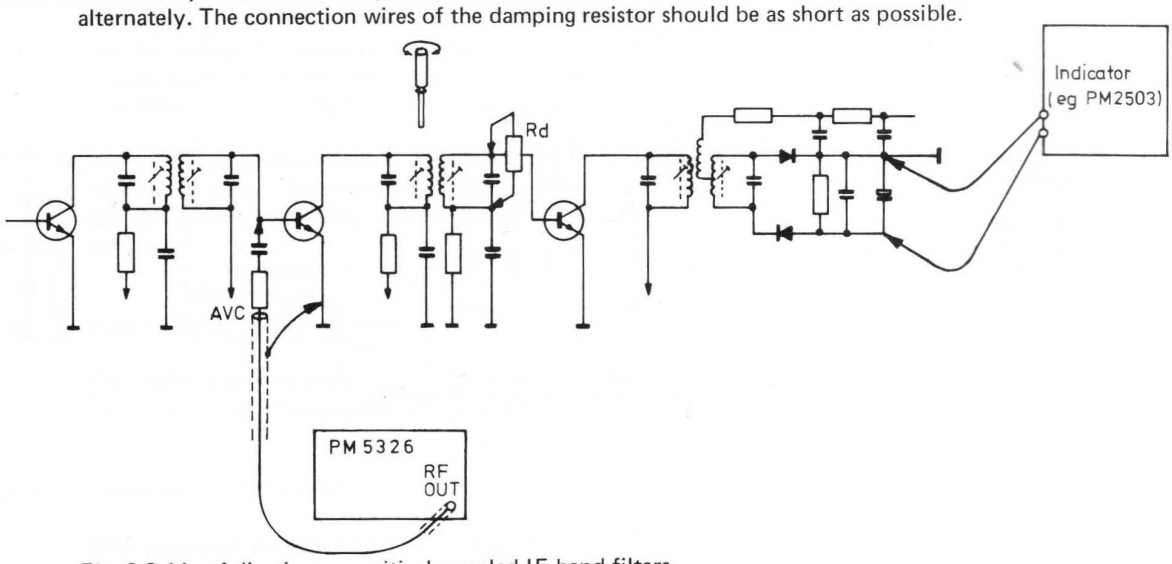

Fig. 3.3-11 Adjusting overcritical coupled IF band filters

Repeat the adjustment of a band filter several times.

3.3.5.5. Symmetry of a ratio detector

The S-shaped demodulator characteristic (fig. 3.3-17) should be linear and symmetric to the zero-axis crossing with normal control. For determining the symmetry, it is convenient to adjust the ratio detector in amplitude limitation . The rectified voltage at the limiter capacitor C2 is halved in the voltage divider and is symmetrical with refence to the LF demodulator output (fig. 3.3-12). For recording the s-shaped demodulator characteristic, supply the signal to the base of the last IF stage.

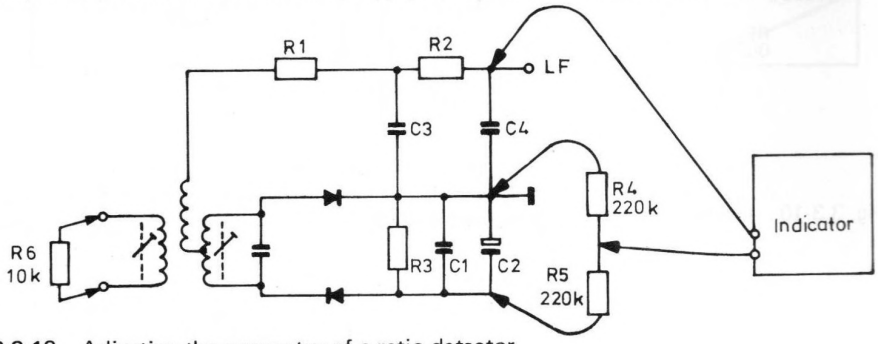

Fig. 3.3-12 Adjusting the symmetry of a ratio detector

3.3.6. Examples of wobbling

3.3.6.1. Test setup for checking and adjusting an FM receiver

see fig. 3.3-13. Examples of oscillograms are shown in figs. 5 and 6. The centre frequency in the FM-IF

range can be adjusted by means of control RF CENTER with reference to the frequency of the RF generator. An example is given in fig. 4, at the top.

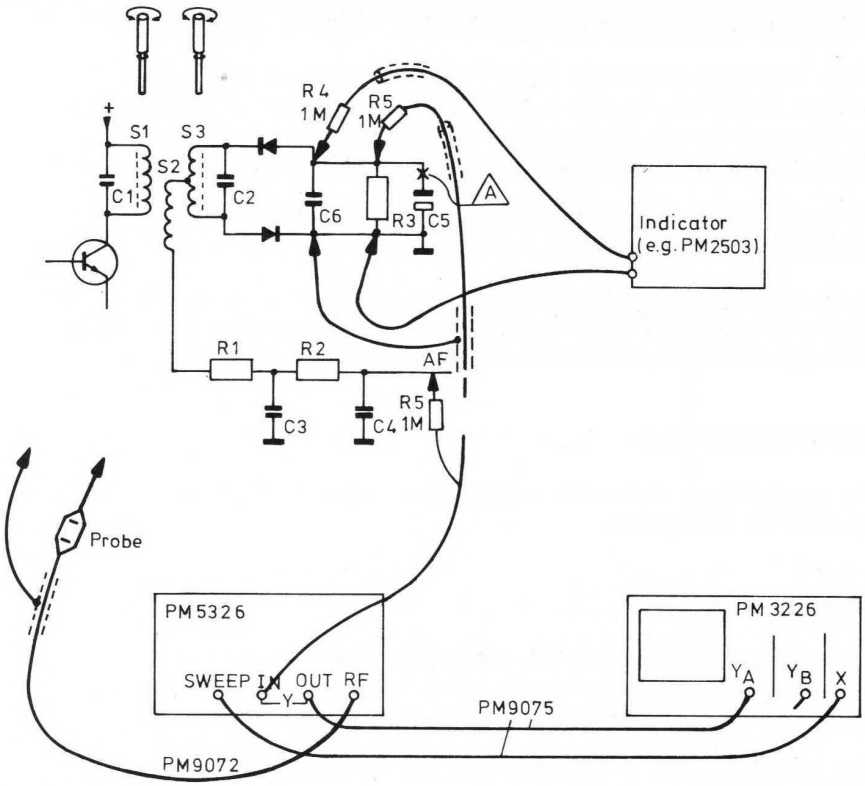

Fig. 3.3-13 Wobbulator setup

With actuated button SWEEP OFF/ON, the RF sweep generator is wobbled about the centre frequency at a frequency deviation adjustable by means of control WIDTH. The display width is set by using control LF AMPLITUDE. For adjusting the wobbulating frequency with ⋀– mode, use control LF FREQUENCY. The same control (PHASE) is used for phase shifting with ∿-mode, when button ⋀/∿ is actuated.

3.3.6.2. Wobbled signals

The wobbled frequency-modulated HF signal with large amplitude (e. g. fig. 4, at the bottom) is supplied to the low-ohmic input of the test object, ideally without reaction. Typical test objects are: AM, FM and TV-IF amplifiers and VHF channel selectors matching to the frequency ranges and the mean frequency deviation of the RF sweep generator. The signals are supplied, for instance, to the low-ohmic base connections of the IF stage. So-called capacitive test probes have been proved good for valved mixer and IF stages, which transfer the wobbled signals to the anodes of the valves without reaction.

The signal is semi-rectangular due to the decoupling at the sweep oscillator; this does not mean any disadvantage, as the important information of an FM signal is inherent in the zero-crossings of the signal. The wave form is not so important, as the amplitude is mostly limited by the IF amplifier.
The portion of the harmonic waves is considerable, especially of the uneven harmonics. This is not inconvenient, as the selective measuring or wobbled object itself extensively suppresses the harmonics.
Instead of the fundamental wave it is possible to operate with the harmonics; but it must be taken into account, that the frequency width increases with the ordinal number of the harmonic. In special cases the harmonics can considerably be reduced by inserting a low-pass filter between output socket and measuring cable, especially valuable for applications according to chapters 3.3.6.7 and 3.3.6.8.

3.3.6.3. The X-channels of wobble indicators,

oscilloscopes, special wobble displays or X - Y high-speed recorders must be DC-coupled. Otherwise, linearity errors occur in X-direction, particularly with slow wobbulating frequencies.

Finite lower limit frequencies in the Y-channel cause pulse droops due to suppression of the DC components. In this way, an error is simulated, which is actually not present. The upper limit frequency of the Y-channel has less effect, as the Y-signal is decoupled after the demodulator and is therefore at low frequency. The oscillograms show that the leading and trailing edges are not very steep.

The non-linearity of an X-channel with finite lower limit frequency is reducible, when wobbled with sine-waves at mains frequency.

As the edges of the wobbling sine-signal are not linear, wobbling must be symmetric to the zero-axis crossing to obtain a deflection synchronous and in phase with the sinusoidal frequency variation. This is the case, when the sweep-flyback is made coincident by means of control PHASE.

3.3.6.4. AGC of wobbled object

For suppression of AGC of the wobbled object, see para. 3.3.4. The DC supplies PE 1535 or PE 1537 are suited for this purpose.

3.3.6.5. Frequency marks

For marking a frequency of the transmission characteristics, the frequencies RF and RF sweep are mixed and the modulationproduct is selected by means of a narrow-band LF amplifier. The frequency marks are produced by amplitude modulation, fig. 3.3-14.

This frequency mark is adjustable over the transmission characteristic by varying the frequency of the RF generator, fig. 3.3-14 and fig. 5.

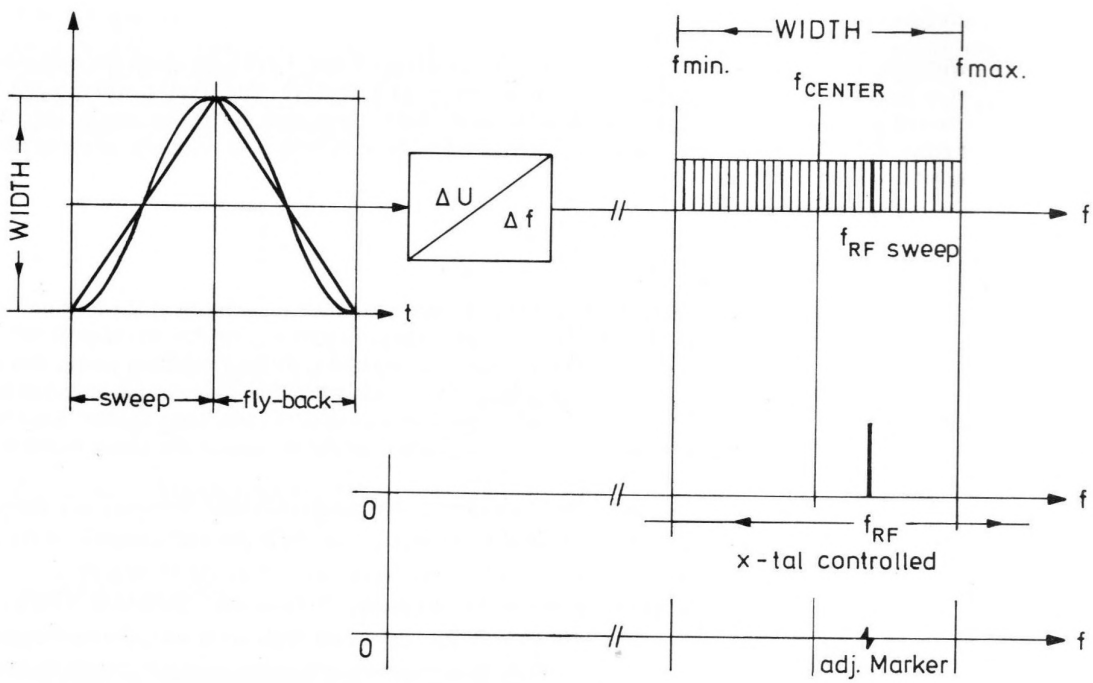

Fig. 3.3-14 Adjustable frequency marks

The frequency mark signal is available at the BNC connector IN-Y-OUT to be superimposed to the Y-signal. The output signal of the test object is active at the Y-input of the wobble indicator via the loop-through IN-Y-OUT and produces a frequency mark at the required point of the transmission characteristics, fig. 3.3-16.

The frequency mark can be displayed separately or in addition via the second channel of a wobble indicator, fig. 3.3-17 (LH-side).

The adjustable frequency mark spectrum is used for rough determination of the linearity and bandwidth of the test object. Fig. 3.3-15 shows the composition of the frequency mark spectrum

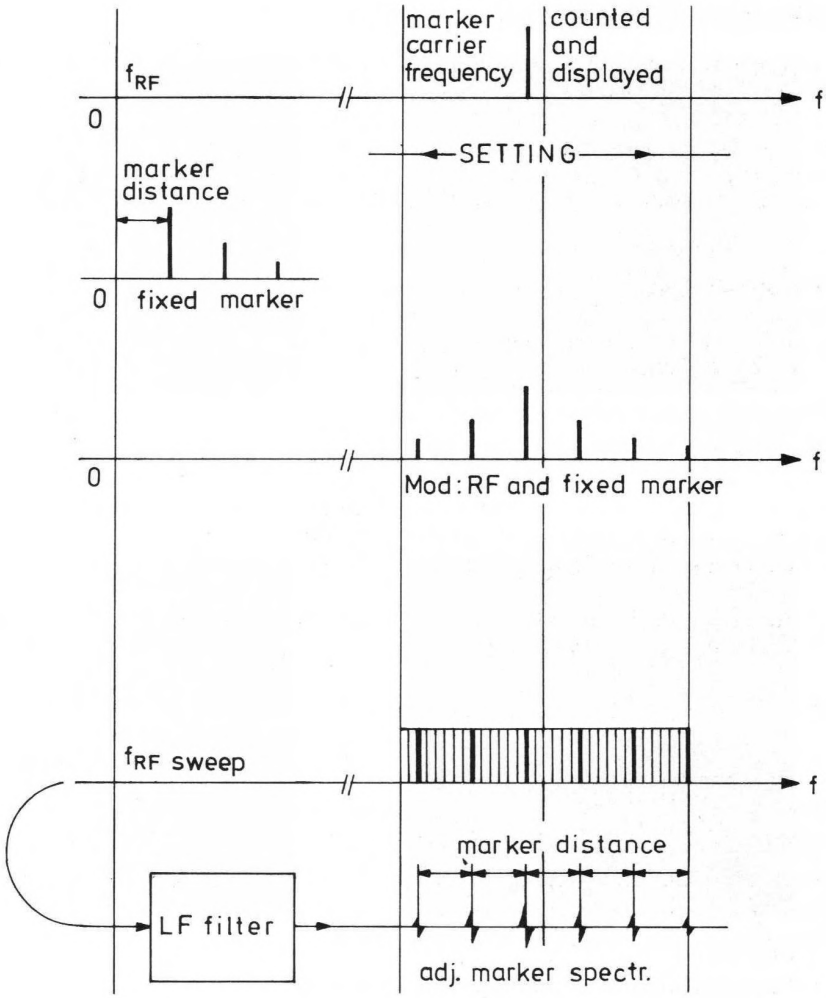

Fig. 3.3-15 Adjustable spectrum of frequency marks

The main mark has the largest amplitude; it marks the frequency indicated by the counter. When operating the FREQUENCY control, the main mark is displaced and the side marks of the spectrum are shifted equidistantly. This allows the frequency marks to be brought into coincidence with the frame of the display unit (fig. 3.3-17).

3.3.6.6. Table of adjustments, example.

Fig. 3.3-21 shows a table of adjustments for a test object, given as an example. It recommends to wobble the AM-IF at 50 Hz with a deviation of 20 kHz. Due to the finite settling time of the IF-amplifier, it is recommended to use low sweep frequencies.

Such low deflections (from 3 Hz) correspond to the resolving power of the Human's eye and, therefore the observer perceives a dashed transmission curve. When connected, it corresponds approximately

to the true line. The FM-IF should be wobbled at 50 Hz with a deviation of 200 kHz; the same applies here as above.

With low frequency deviations, occurring on wobbling in the AM range, for example, the frequency marks are relatively large and apparently non-defined. It is, however, recommended to fix the bright point in the middle of each frequency mark, which is due to the phase jump with equal wobble and mark frequency, fig. 3.3-16.

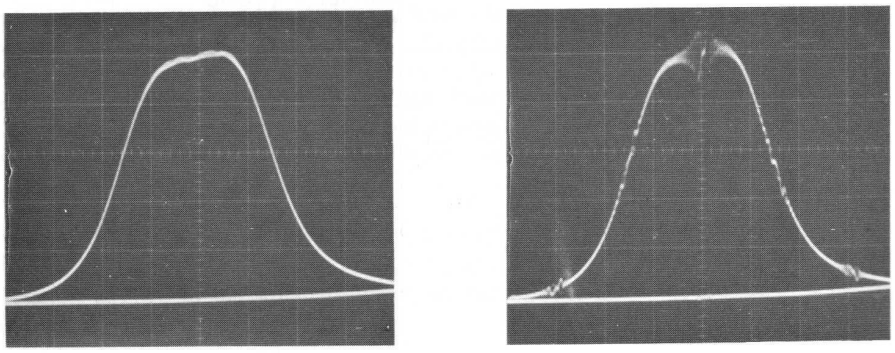

Fig. 3.3-16
Non-marked and marked AM-IF transmission characteristics

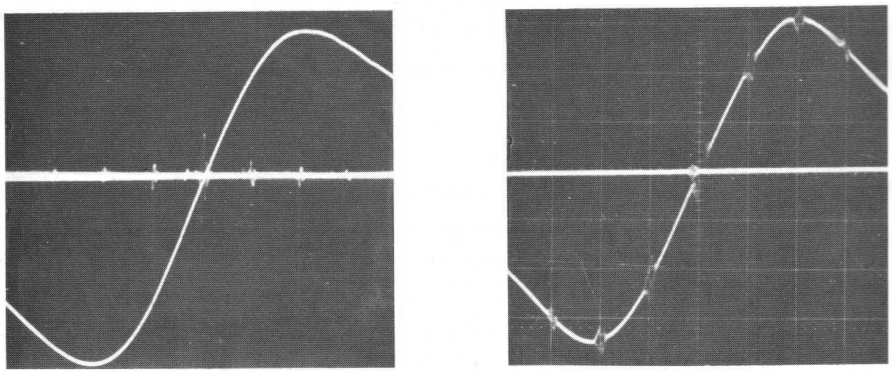

Fig. 3.3-17
Frequency marks of the zero line and/or transmission characteristics, with reference to frame

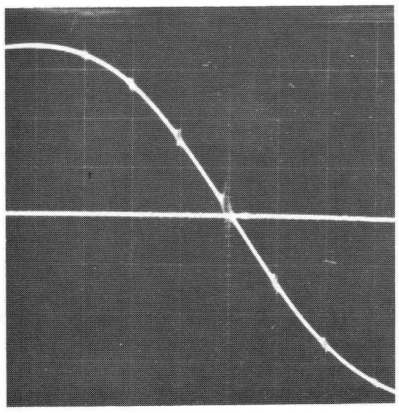

Fig. 3.3-18 Spectrum of frequency marks (with reference to frame) of a coincidence demodulator (quadrature)

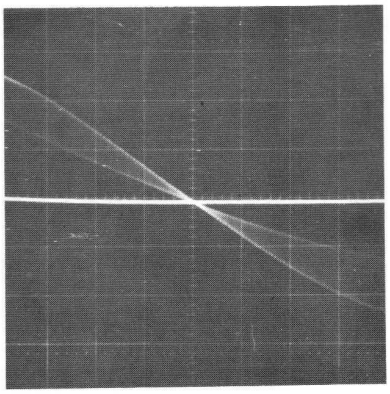

Fig. 3.3-19 Amplitude modulation when wobbling with insufficient amplitude limitation of test object

3.3.6.7. S-characteristic of an FM demodulator

The quality of the reception depends considerably on the zero-axis crossing, symmetry and linearity of the S-characteristic of an FM demodulator. Fig. 3.3-17 shows the properly adjusted S-characteristic of a ratio detector with frequency marks and an oscillogram with frequency marks on the zero line.

These frequency marks considerably facilitate the adjustment and evaluation of the demodulator characteristic, particularly when the marks are spaced at the same distance as the reference frame.

For adjusting the S-characteristic, supply the wobbled RF signal to the base of the last FM-IF transistor stage, so that the IF amplifier cannot reduce the bandwidth.

3.3.6.8. S-characteristic of a coincidence demodulator

Fig. 3.3-18 shows the transmission characteristic of an IF quadrature demodulator (coincidence demodulator). It can be realized by an IC with high amplification and strict limitation of the main IF signal a. o. The main channel selection acts as a filter between the FM tuner and the IF quadrature demodulator.

A parallel resonant circuit can be used as phase shifter, furnishing a phase-shifted voltage component with high-ohmic IF signal control, which is proportional to the frequency variation. For the centre frequency, the phase shift is 90°.

For demodulation, the main signal is multiplied by the phase-shifted voltage in a multiplier. The plotted geometric sums give the transmission characteristic.

3.3.6.9. Amplitude limitation

For checking the amplitude limitation of the test object, the wobbled RF signal is additionally amplitude-modulated with button MODULATION OFF/ON depressed.

Set attenuator to position 40 dB and reduce the RF signal by means of potentiometer 0 – 80 dB just until the superposition of the 1 kHz signal over the S-characteristic becomes visible. Then turn the attenuator switch to position 3 dB or 0 dB; with correct amplitude limitation, the superposition of the S-characteristic should be completely suppressed. When increasing the signal, take care that the set-in point of the AGC is not exceeded, otherwise additional limitation could be the result, see para. 3.3.4 and fig. 3.3-19.

3.3.7. IF transmission characteristic of a TV set

Fig. 3.3-20 shows the ideal IF transmission characteristic of a TV set. Due to the residual time band modulation in the transmitter, the lower frequencies (from 0 to 1.25 MHz) are doubled in the receiver during demodulation and must be reduced by a factor 2 at point f_1 of the Nyquist slope.

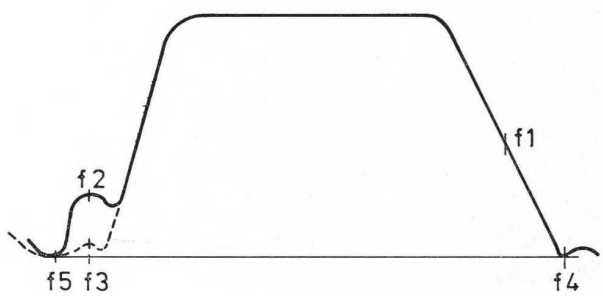

$$A_{f1} = \frac{A_f}{2}$$

$$A_{f2} = \frac{A_f}{12 \div 20}$$

$$A_{f3} = \frac{A_f}{200}$$

$$A_{f4} = A_{f5} = \frac{A_f}{800}$$

Fig. 3.3-20 Ideal transmission characteristic of a TV set

The amplitude of the waveform at f_2 should be 12 to 20 times smaller than the max. amplitude of the vision. With parallel sound mode, the amplitude is reduced 20 times at point f_3. The suppression factor of the adjacent picture f_5 and the adjacent sound f_4 should be 800 at least. Refer to manufacturer's documentation for exact alignment procedure.

To determine the adequate damping of the critical points of the transmission characteristic, e. g. f_2, f_3, f_4 and f_5 in fig. 3.3-20, the point-by-point method is recommended.

For tracing the transmission characteristic, use the wobble range 36/41.

SK Wave range				*			
MW 517-1622 kHz	/00/28/50: 452 kHz /15 : 470 kHz /19/59 : 460 kHz ΔF 20 kHz (50 Hz) via 33 nF	A B	C401 min. cap.	K	L H K	2 1	
LW 148.5-262.5 kHz	147 kHz	K	C401 max. cap.		C		
MW 517-1622 kHz	1635 kHz		C401 min. cap.		C584		1 V max.~
SW 7.03-21.97 MHz	6.95 MHz	J	C401 max. cap.		B		
	22.2 MHz		C401 min. cap.		C573		
LW 148.5-262.5 kHz	156 kHz	K	Tune in		S407c.d		1 V max.~
MW 517-1622 kHz	550 kHz				S407a,b		
	1500 kHz				C563		
SW 7.03-21.97 MHz	7.5 MHz	J			A		
	21 MHz				C555		
SW (49 m) 5.91-6.24 MHz	6.1 MHz				P		
	5.89 MHz		C401 max. cap.		C578		
FM 87.5-104 MHz	2 10.7 MHz ΔF 200 kHz (50 Hz) via 5 nF	C D J	S310 min. ind.	CN	E D M N G	3 1 3 4 4	
FM 87.5-104 MHz	108 MHz	J	S310 min. ind.		C331		1 V max.~
	96 MHz		tune in		S310,312		

* Turn the mentioned coils fully outwards.

1 Adjust for maximum height and symmetry.
2 Open bridge , damp S526c with 1,5 kΩ
3 Close bridge
4 Adjust for maximum slope and symmetry of the "S"-curve.

1 Ajuster sur hauteur et symétrie maximales.
2 Ouvrir le pontet . Amortir S526c avec 1,5 kΩ
3 Fermer le pontet .
4 Ajuster sur raideur et symétrie maximales de la courbe en "S".

1 Justiere auf maximale Höhe und Symmetrie.
2 Öffne Brücke . Dämpfe S526c mit 1,5 kΩ.
3 Schliesse Brücke .
4 Justiere auf maximale Steilheit und Symmetrie der "S"-Kurve.

Fig. 3.3-21
Table of adjustments, example of an FM/AM-receiver
Abgleichtabelle, Beispiel eines FM/AM-Empfängers
Table de réglage, exemple d'un recepteur FM/AM
(PHILIPS RH 702)

Service instructions

4. Service part

4.1 CIRCUIT DESCRIPTION

4.1.1 RF part

The RF generator is based on the phase locked loop (PLL) principle, Fig.4.1-1. It comprises the complete unit 1. The active element of the generator, voltage controlled oscillator (VCO), comprises an emitter coupled oscillator, integrated circuit 352, tuning capacity diode 401 and range coils 751-759.
The range coils are switched in by means of reed relays 801-810 via BCD to decimal decoder IC 353. So only 4 coded lines Qa-Qd from the pushbutton switch array determine the 9 frequency ranges. In the highest range up to 125 MHz coil 751 is switched in. As at that frequencies the stray and switching capacities have the highest influence, relay 802 switches off the parts not used in the circuitry.
Capacity diode 401 completes the coils to form an oscillating circuitry the resonant frequency of which can be varied by the d.c. control voltage via resistor 608.
The HF signal is sinusoidal decoupled via dual-gate-MOSFET 301, while the trapezoidal signal at the output 352.3 is traced through the 1/n divider chain 354-360.
A buffer, triple-line-receiver IC 351, is interconnected, reducing the harmonic interferences, surged by the divider chain. The gates in the divider are enabled via lines A-G. The divided variable frequency is for phase comparison applied to resistor 623 of the gate stage 360. At resistor 624 the same signal is fed to the counter, connection J of U6. By decoupling the signal before phase comparison the right frequency is indicated despite of trouble in the PLL.
The reference frequency of 0.5-1.25 MHz is generated by the variable frequency oscillator (VFO), comprising transistor 306, tuning capacitor 550, coil 760 and capacitors 522-527 as frequency determining elements, whereby capacitors 523-525 serve for temperature compensation.

At 634 and amplifier transistor 307 the signal is decoupled and fed to prescaler 361. By control lines H-K the 1-2-5 division for the frequency ranges is achieved.
At 639 of gate stage 362 the reference signal is available and fed to 363.1 of the phase comparator. With variable signal at 363.3, at output 5 and 10 a phase and frequency depending d.c. voltage of 0.75V to 2.25V is origined. Via filter and amplifier 309 this d.c. voltage controls capacity diodes 401 of the VCO, thus closing the loop. So every changing the VFO frequency leads to change of the VCO frequency.
Control line A-K and Qa-Qd, being incorporated into a "code-line", are fed through the metal case to unit 6.

Switching stage relais 805 and 806 of unit 4 passes the RF frequency to buffer IC 353, if none of the RF sweep range buttons is pressed. If one of the latter is pushed, relay 806 opens the RF path, while 805 closes, allowing the frequency modulated or wobbulated signal of IC 352 to pass via decoupling stage, IC 353 too, to the buffer 353 of the RF path.

The AM modulator is represented by the 4 quadrant multiplier IC 356 of unit 4. When unmodulated the carrier is determined by a d.c. voltage of input 4. NF modulation is possible with amplitude of equal value as this d.c. voltage; so 100% modulation is possible. Potmeter 634 adjusts the transmission characteristic to maximum NF suppression.

The 1 kHz oscillator, IC 354 of unit 6 produces the sinewave signal for internal modulation. External modulation is possible via buffer stage 308.

Amplitude, automatic gain control AGC

The RF signal signal at IC 355.7 is rectified and amplified (transistors 306, 311) and fed to the control input of 354.5. Time constant (649 + 644)/522 effects amplitude modulations of >20 Hz not being gain controlled. The amplitude is adjusted by potmeter 645.

The output amplifier is built up as impedance converter in cascode stage 307, 308, resulting in maximum bandwidth. During retrace in the sweep mode diode 406 closes transistor 308 cutting off the RF signal, see Fig. 4.1-4.

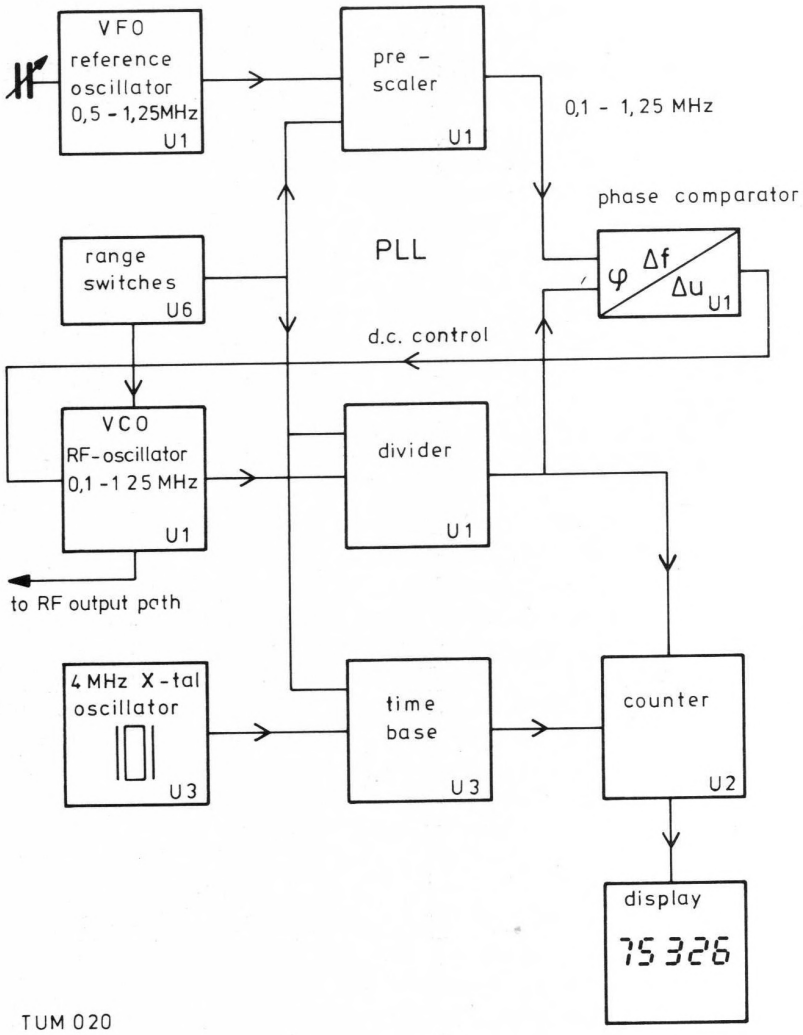

Fig. 4.1 - 1 , principle of operation

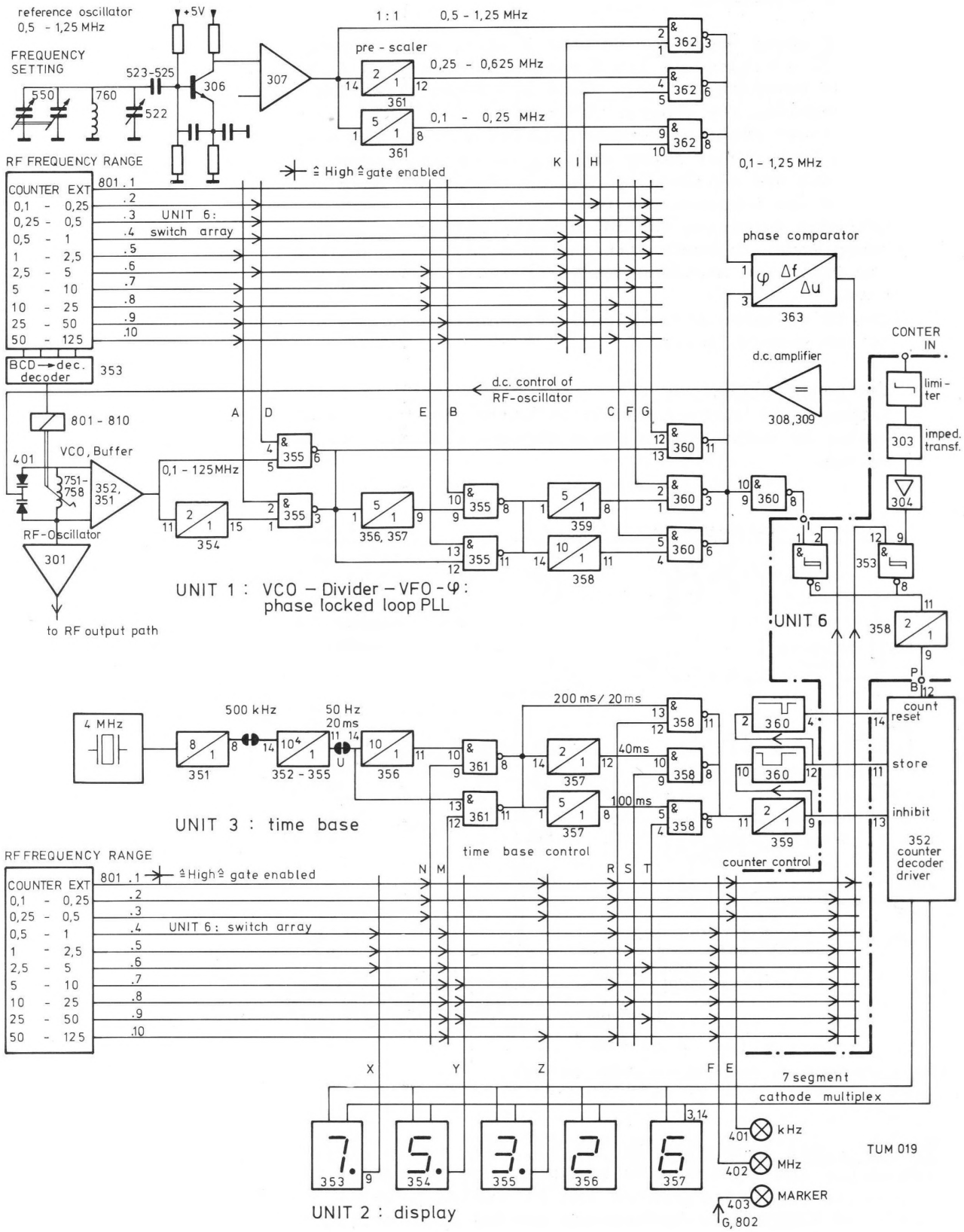

Fig. 4.1-2 function diagram of U1, U2, U3, part of U6;

4.1.2 RF sweep part

The RF sweep generator on unit 4 is an emitter-coupled multivibrator IC 352, activated in its 4 ranges by switching in the capacitors 510 to 514 covering the main audio and video IF's. The signal is semi-rectangular, see chapter 3.3.6.2.
The linear function between control voltage and output frequency results in a linear sweep without additional components. The center frequencies are adjusted by d.c. voltages. The main components are pointed out in the function diagram Fig. 4.1-3.
Extended switching and adjustments serves for convenient operating the sweep mode: together with the wobbulating ranges the center frequency, the width and marker distance of the spectrum is automatically switched over.
The FM or wobbulating signal respectively passes d.c. decoupled via 551 to the summing point.

The power supply for the RF sweep generator is filtered by the regulating power control IC 351 in order to prevent modulating the multivibrator by noise of the power supply. Potmeter 604 adjusts the supply voltage.

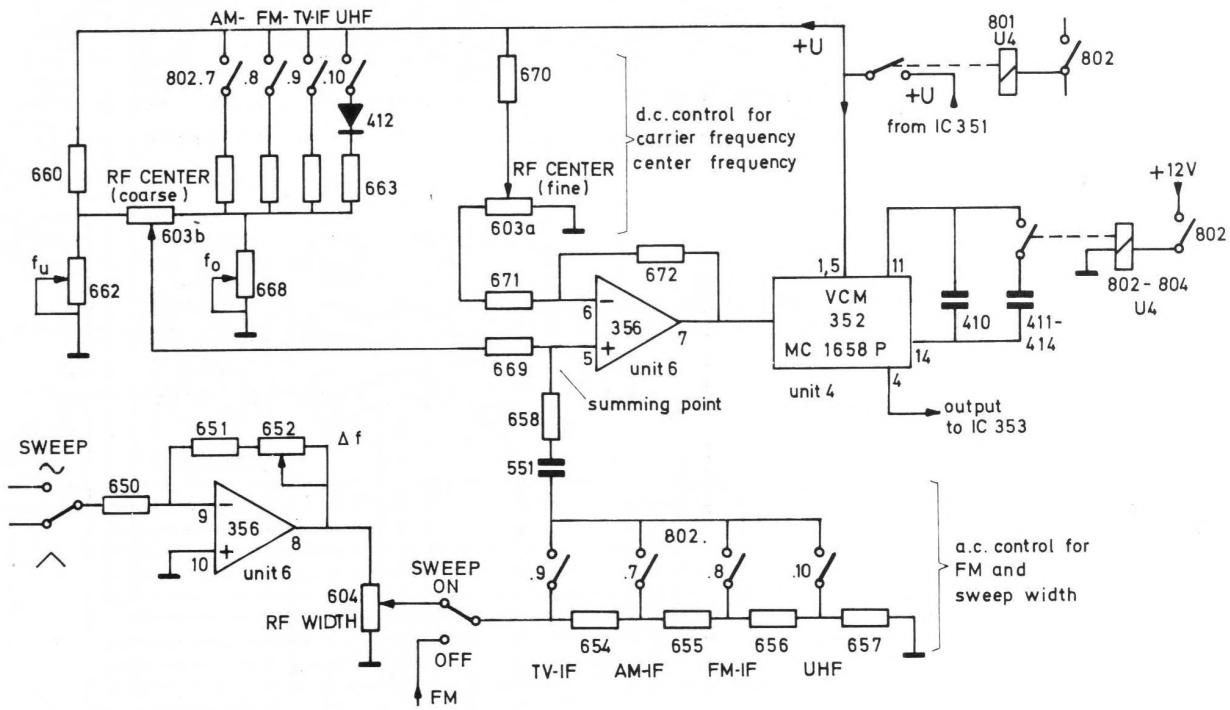

Fig. 4.1-3 RF sweep; control of multivibrator MC 1658P

The LF sweep generator IC 355/U6, Fig. 4.1-4, produces time-symmetrical trangular and square wave signals, the frequency of which is set by capacitor 533 and overmore can be varied between 3 and 30 Hz by potmeter 601/a LF FREQUENCY. During the second half period transistor 307 cutts off the RF path via diode 406 and transistor 308 and prevent the markers of the fixed marker generator getting to the marker modulator 301, 302 of unit 4.

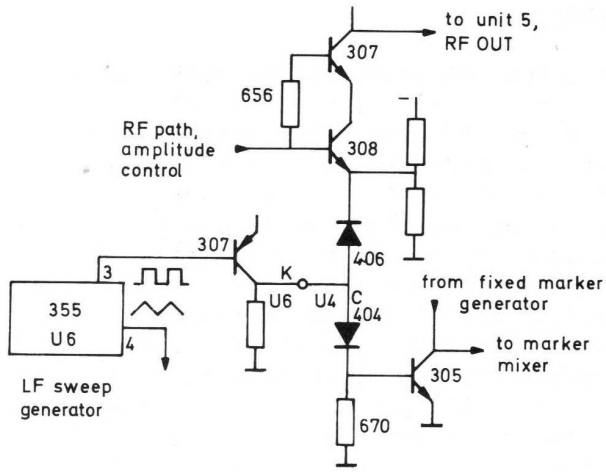

Fig. 4.1-4 LF sweep generator: blanking circuitry

The sinusoidal wobbulating voltage of 50 Hz is derived from the mains transformer, filtered by 682/527 and 621/528 and fed to the phase shifting stage 306. As in this mode of operation the retrace is not blanked, the sweep and retrace curves can be identically covered on the oscilloscope by the LF PHASE potmeter 601/b.
The peak value of the triangel is set by 652/U6, the amplitude of the sinewave is adjusted to that value by 623 and 683/U6.
For X-deflection of an indicator buffer 356 serves to adapt the wobbulating signal to the MOD/SWEEP OUT output. For AM the modulating signal is applied to that output. Transistor 308 serves for buffering the MOD IN external modulating input.

4.1.3 Frequency marker part

The modulator for the frequency marker 301, 302, 303 is a transistor coupled differential amplifier. The current via differential stage 303 is modulated by the RF signal of the VCO. The active stage 301 controls the current in the rhythm of the RF sweep signal. By this means side frequencies are generated which are decoupled by the band pass filter amplifier IC 357/U6 and looped via 608 and 609 to the Y-channel of the wobbulating indicator. The bandwidth of the filter is switched over due to the chosen sweep range. The accuracy and stability of the travelling marker are those of the RF frequency, see fig. 3.3-14.

The fixed marker generator, multivibrator 309/310 and 10:1/10:1 divider 357 of unit 4 produce frequencies of 1 MHz with a duty cycle of 5:1, 100 kHz and 10 kHz. Gates 358 pass the relevant side frequencies via 305 (blanking stage for retrace) and separating stage 304, additionally controling the current of the frequency marker modulator, whereby the RF frequency is designed as carrier, which is amplitude modulated by the fixed marker frequency and some of its side frequencies, see fig. 3.3-15, middle. When tuning the RF marker, the side frequencies are travelling in fixed distance. So a travelling fixed marker spectrum origines. The distance of the marker is adjusted by potmeter 677.

The unit 8, mounted to the display and time base circuitries, units 3 and 2, serves for convenient adjusting the carrier frequency when operating the instrument in the sweep ranges.
At beat frequency of the RF generator and the sweep oscillator the LED indicator MARKER at the frontplate is dimmed and flickers, effected by interlacing the cathode path of the indicator via IC 351.

4.1.4 Frequency display

The circuitry comprises counter and display unit 2 and time base unit 3.
The signal from the RF generator unit 1 is fed via connection 37 of unit 6, Schmitt trigger 353, pre-scale stage 358 and pin 37/U6 to the counter input 352.12.
The reference frequency for the time base is generated by the X-tal oscillator in combination with transistor 301.
The 4.000000 MHz represent the basis wave in parallel resonant circuitry. Via amplifier 302 the signal is applied to a divider chain. The first stage 351 serves for division of 1:8, but, if necessary, for quicker and slower reading of the display, the division can be altered to 1:4 or 1:16 (flickering of the last digit). Compensating this, the counter input has either to be applied to P or Q of unit 6. The subsequent integrated circuits 352-355 are switched in for $1:10^4$ division. At solder joint U - suitable for failure chasing - 50 Hz (20 ms) can be measured. Stages 356-358, 361 divide this frequency due to the chosen range in 1(10)-2-5 ratio. The signal, gated by 358, is applied to the D-flip-flop 359, generating the T/2 gate time for the counter decoder driver 352, unit 2.

Overmore it is applied to double monostable multivibrator 360, which generates the store- and reset pulses, determined by the RC combinations 605/514 and 609/516.
The timing diagram of the mentioned signals is shown in the figure 4.1-6.
If you have the COUNTER EXTernal mode, the frequency is fed via a limiter stage, impedance transformer 303, amplifier 304 to Schmitt-trigger 353.9. In this mode, trigger 353.6 is disabled.
Solder joints A1-A3 are taken into account, if you have the PM 5326X version of 100 MHz extended counter facility, see Fig. 18 and SGS 17.

Signal available at	RF OUT connector	Pin 363.1	Pin 363.3	Pin 352.12	Pin 352.13	--
Nominal frequency range	Measuring frequency range	Frequency range at inputs of the phase comparator (363/U1)		Frequency range at counter input (352/U2)	Gate time (count enable)	Display format
COUNTER EXT	--	--	--	--	200 ms*	XXX.XX kHz*
.1 ... .25 MHz	< .1 ... > .25 MHz	.1 ... .25 MHz	.1 ... .25 MHz	.05 ... .125 MHz	200 ms	XXX.XX kHz
.25 ... .5 MHz	< .25 ... > .625 MHz	.25 ... .625 MHz	.25 ... .5 MHz	.125 ... .25 MHz	200 ms	XXX.XX kHz
.5 ... 1 MHz	< .5 ... > 1.25 MHz	.5 ... 1.25 MHz	.5 ... 1 MHz	.25 ... .5 MHz	20 ms	X.XXXX MHz
1 ... 2.5 MHz	< 1 ... > 2.5 MHz	.5 ... 1.25 MHz	.5 ... 1.25 MHz	.25 ... .625 MHz	40 ms	X.XXXX MHz
2.5 ... 5 MHz	< 2.5 ... > 6.25 MHz	.5 ... 1.25 MHz	.5 ... 1 MHz	.25 ... .5 MHz	100 ms	X.XXXX MHz
5 ... 10 MHz	< 5 ... > 12.5 MHz	.5 ... 1.25 MHz	.5 ... 1 MHz	.25 ... .5 MHz	20 ms	XX.XXX MHz
10 ... 25 MHz	<10 ... > 25 MHz	.5 ... 1.25 MHz	.5 ... 1.25 MHz	.25 ... .625 MHz	40 ms	XX.XXX MHz
25 ... 50 MHz	<25 ... > 62.5 MHz	.5 ... 1.25 MHz	.5 ... 1 MHz	.25 ... .5 MHz	100 ms	XX.XXX MHz
50 ... 125 MHz	<50 ... >125 MHz	.5 ... 1.25 MHz	.5 ... 1.25 MHz	.25 ... .625 MHz	20 ms	XXX.XX MHz

* PM 5326 X: 100 ms; XX.XXX MHz resp.

Fig. 4.1-5 **Table of frequency ranges, gate times, display formats**

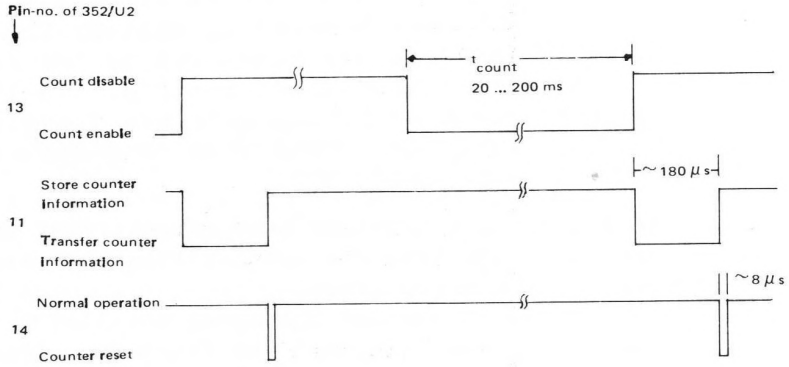

Fig. 4.1-6

4.2. ACCESS TO PARTS

Before dismantling the instrument, the safety regulations in accordance with para. 2.1. must be strictly observed.

4.2.1. Cabinet, see 2.4.

4.2.2. Knobs

- Remove the cap from the knob.
- Unscrew the nut and remove the knob.
- When replacing the knob, ensure that the white mark is correctly aligned with the text plate markings.

4.2.3. Text plate

- Remove the cabinet, see 2.4.
- Remove the 8 turn-knobs, see 4.2.2.
- Remove the 3 bearing bushes.
- Remove the plastic cover of the mains switch.
- The text plate can now be removed.

4.2.4. Mains transformer

- Unscrew the right-hand side frame of the case. The holding angle can remain connected to the side frame.

4.2.5.

Unit 1, variable capacitor 550: are mounted in the upper part of the cast RF housing.
Unit 4, attenuator switch, attenuator potentiometer: are mounted in the bottom part of the cast RF housing.

4.2.6. Pushbutton unit

Replacing a pushbutton lever.

The single pushbutton lever can be replaced from the front.
- Push the spring towards the pushbuttons.
- Remove the wire strap or plastic part.
- Carefully tear the pushbutton lever out of the pushbutton.

Replacing a switch of the pushbutton unit

- Straighten the 4 retaining lugs of the relevant switches as shown in the figure below.
- Break the body of the relevant switch by means of a pair of pliers and remove the pieces. The soldering pins are then accessible.
- Remove the soldering pins and clean the holes in the printed circuit board (e. g. with a suction soldering iron).
- Solder the new switch on to the printed circuit board.
- Bend the 4 retaining lugs back to their original positions.

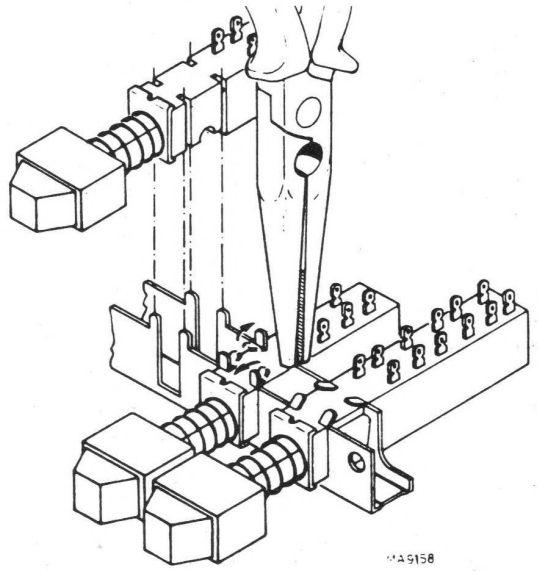

4.2.7. Replacing the RF attenuator, Fig 10

a. Loosen the coupling.
b. Push the shaft a little towards the front.
c. Loosen the nut.
d. Desolder the 2 wires between attenuator potmeter and attenuator switch.
e. Remove the clip.
f. Desolder the output wire.
g. Desolder the small cap.!
h. push the attenuator towards the back and remove it.

For mounting a new RF attenuator perform this procedure in the reverse order.

4.3. CHECK AND ADJUSTMENT

- The limits mentioned in this paragraph are valid only for a newly adjusted instrument and therefore might deviate from the values as stated in paragraph 1.2. "Technical Data".
- Adjustment of the instrument is only permitted after a warm-up time of at least 30 minutes at an ambient temperature of (+23 ± 3)^{o}C and when connected to a mains voltage of (230 ± 11.5) V.
- If not explicitely stated otherwise, the voltage potentials refer to the relevant contact measured against circuit earth ($\perp_0$).
- The covers of the cast RF housing can be well removed for check and adjustment. When mounting the covers the counter-sunk screws must be tightened with equal torque.
- The following abbreviations are used for setting and measuring instruments:

X	= Button pressed	
–	= Button not pressed/unlocked	
rh	= Extreme right-hand position	
lh	= Extreme left-hand position	
m	= Mid-position	
–	= Multimeter	e. g. PM 2503
OSC	= Oscilloscope	e. g. PM 3240, PM 3260
C	= Counter, 6 digits	e. g. PM 6630
Fg	= Function generator	e. g. PM 5127
B & K	= Selective voltmeter (Brüll & Kjaer)	2007
–	= Sampling voltmeter (AC voltmeter)	HP 3406 A
DM	= Digital multimeter	e. g. PM 2424
–	= variable-ratio isolating transformer	
50 Ω	= 50 Ω terminating resistor	e. g. PM 9585

4.3. CHECK AND ADJUSTMENT

4.3...	PUSH-BUTTONS: MODULATION OFF ON 802/1	AM FM -/2	INT EXT -/3	MARK OFF ON -/4	SWEEP OFF ON -/5	⌒ ~ -/6	RF SWEEP RANGE (NHz) .4/.5 -/7	10/11 -/8	36/41 -/9	75/110 -/10	COUNT EXT 801 -/1	FREQUENCY RANGE (MHz) .1- -/2	.25- -/3	.5 - -/4	1 - -/5	2.5- -/6	5 - -/7	10 - -/8	25 - -/9	50 - -/10	125	CONTROLS: C and R Position (lh ↻ rh)	PULL FOR FIXED MARK	ATTENUATION (dB) 601/U5	801/U5	POWER ON 851	MEASURING: Sockets or: Unit	Point	◇ x	Fig.	Measured value	Adjustm. control-position	REMARKS
1.	Power supply, unit 6																																	
1.1.1	-	-	-	-	-	-	-	-	-	-	-	-	-	-	-	-	-	-	-	-			x	o	o	x	6	+12 V	1	13	12 ± 0,5 V		Up~ = 230 V
1.1.2																												-12 V	2		12 ∓ 0,5 V		
1.1.3																												5,25 V	3		5,25+0-0,05 V	603	
1.1.4																												27 V	4		27 ± 1 V		
1.2.																												see 1.1.1 - 1.1.3			± 50 mV		Up~ = 207...257 V
1.3.1																											6	+12 V	1	13	10 mV		
1.3.2																												-12 V	2		10 mV	hum pick-up	OSC
1.3.3																												5,25 V	3		15 mV		
1.3.4																												27 V	4		150 mV		
2.	Display, unit 2 and 3																																	
2.1.																											3	606/607	5	15	4000 kHz±1 Hz	502	C:
2.2.											x																intern display				500,00 ±1 digit		500 kHz, 100 mVpp COUNTER IN
3.	RF Generator, unit 1																																	
3.1.											-											SETTING lh					1	637	6	11	498 ± 0,5 kHz	760 ↑	C
3.2.																						rh					1	638			1255 ± 1 kHz	522 ↓	
3.3.1												x										< 100 kHz	x	0 dB	0 dB	x	1		11	11	< 100 kHz		C to RF OUT
3.3.2												x										rh						DC 50kΩ/V	645 4		250 kHz	759	DC: 1 V ± 0,5 V
3.3.3												-	x									< 250 kHz									< 250 kHz		The internal and external frequency display must be identically; max. deviation ±1 digit (of the 5th digit).
3.3.4													x									rh						1 V + 0,5 V			625 kHz	758	
3.3.5													-	x								< 625 kHz									< 500 kHz		
3.3.6														x								rh						1 V + 0,5 V			1,25 MHz	757	
3.3.7														-	x							< 1 MHz									< 1 MHz		
3.3.8															x							rh						1 V + 0,5 V			2,5 MHz	756	
3.3.9															-	x						< 2,5 MHz									< 2,5 MHz		
3.3.10																x						rh						1 V + 0,5 V			6,25 MHz	755	
3.3.11																-	x					< 5 MHz									< 5 MHz		
3.3.12																	x					rh						1 V + 0,5 V			12,5 MHz	754	
3.3.13																	-	x				< 10 MHz									< 10 MHz		
3.3.14																		x										1 V + 0,5 V			25 MHz	753	
3.3.15																		-	x			< 25 MHz									< 25 MHz		
3.3.16																			x			rh						1 V + 0,5 V			62,5 MHz	752	
3.3.17																			-	x		< 50 MHz									< 50 MHz		
3.3.18																					x	rh						1 V + 0,5 V			125 MHz	751	

4.3...	PUSH-BUTTONS: MODULATION OFF ON 802/1	AM FM -/2	INT EXT -/3	MARK OFF ON -/4	SWEEP OFF ON -/5	∧ ∼ -/6	RF SWEEP RANGE (MHz) .4/.5 -/7	10/11 -/8	36/41 -/9	75/110 -/10	COUNT EXT 801 -/1	FREQUENCY RANGE (MHz) .1- -/2	.25- -/3	.5 - -/4	1 - 2.5- -/5	-/6	5 - 10 - -/7	-/8	25 - -/9	50 -125 -/10	CONTROLS: C and R Position (lh ↺ rh)	PULL FOR FIXED MARK	ATTENUATION (dB) 601/U5	801/U5	POWER ON 851	MEASURING: Sockets or: Unit	Point	◇ x	Fig.	Measured value	Adjustm. control-position	REMARKS
4.	Generator for marker spectrum, unit 4																															
4.1.									x											-		-			x	4		7	12	5,25±0,05 V	604	
4.1.a									x																	8					604	adjust MARKER LED to equal luminance as the MHz LED
4.2.									x													-						8		5 ± 0,5 V		
4.3.1									x													-						9		1 MHz ± 2 kHz	677	C
4.3.2								x	-													-						9		100kHz ± 200Hz		C
4.3.3							x	-														-								10 kHz ± 20 Hz		
4.4.1							x or x or x or x															x								MARKER ☼		
4.4.2							-	-	-	-																				●		
5.	Amplitude modulator, unit 4																															
5.1.	x																			x						4		10	12	Minimum	634	OSC via Filter, fgo≅1 MHz
5.2.	-														x					-	SETTING 1 MHz		o	o		4	RF OUT			49-51 mV_{rms}	645	AC-Voltmeter ‖ 75 Ω
5.3.												x or x or x						x or x or x				x								ΔU < 2 dB		if >2 dB in range 50-125 MHz, omit or enlarge 541/U4
6.	RF Sweep generator, unit 6																															
6.1.1							x					-	x					-	-	-	SWEEP CENTER rh					6				≧ 0,51 MHz	668	C to RF OUT
6.1.2							-	x									x													≧ 11,5 MHz		
6.1.3								-	x										x											≧ 42 MHz		
6.1.4									-	x										x						4				≧ 113 MHz	510	
6.2.1										x											lh					6				≦ 74 MHz	662	
6.2.2									x	-																				≦ 35,5 MHz		
6.2.3								x	-																					≦ 9,5 MHz		
6.2.4							x	-																						≦ 0,39 MHz		
6.2.5.																		x			SETTING 10.7 MHz									10.7 MHz ± 0.01%		C to RF OUT; adjust SWEEP CENTER till MARKER LED shows min. intensity
6.2.6.								x													SWEEP CENTER											
7.	LF Generator, unit 6																															
7.1.	x		-					x													LF AMPL rh						-/SWEEP OUT			1 ± 0,2 kHz		C to/SWEEP OUT
7.2.1	-				x	-		x													LF FREQU rh					6				>25, < 40 Hz	628 Δ	
7.2.2					x			x													lh									fmin ≦ fmax/10		
7.3.					-			x													rh					4	RF OUT			Blanking		OSC
8.	Modulation: AM/FM																									Modulation voltage at MOD/OUT				AM: %		
8.1.1	x	-	-					x																			5,2 - 6,0 Vpp			25% - 35%		
8.1.2	x		x					x																		ext	1,6 - 1,8 Vpp			for 30%		
8.1.3	x		x					x																		ext	5,5 - 5,8 Vpp			for 95%		OSC to-/SWEEP OUT 2 kHz in MOD/-IN B&K to RF OUT (selective voltmeter)
8.2.1	x	x	x					x																						FM : Δf		
8.2.2	x	x	-					x																		ext	5,5 - 5,8 Vpp			60 - 90 kHz		
8.2.3	x	x	x					-		x																	5,2 - 6,0 Vpp			17,5-27,5 kHz		
8.2.4	x	x	-							x																ext	5,5 - 5,8 Vpp			65 - 95 kHz		
																											5,2 - 6,0 Vpp			22,5-32,5 kHz		

4.3...	PUSH-BUTTONS: MODULATION OFF ON 802/1	MODULATION AM FM -/2	MODULATION INT EXT -/3	MARK OFF ON -/4	SWEEP OFF ON -/5	SWEEP ⌒ ∿ -/6	RF SWEEP RANGE (MHz) .4/.5 -/7	RF SWEEP RANGE (MHz) 10/11 -/8	RF SWEEP RANGE (MHz) 35/41 -/9	RF SWEEP RANGE (MHz) 75/110 -/10	COUNT EXT 801-/1	FREQUENCY RANGE (MHz) .1- -/2	.25- -/3	.5 - -/4	1 - -/5	2.5- -/6	5 - -/7	10 - -/8	25 - -/9	50 -125 -/10	CONTROLS: C and R Position (lh rh)	PULL FOR FIXED MARK	ATTENUATION (dB) 601/U5	ATTENUATION (dB) 801/U5	POWER ON 851	MEASURING: Sockets or: Unit	Point ◇ x	Fig.	Measured value	Adjustm. control-position	REMARKS
9.	LF Sweep generator, unit 6																														
9.1.1	-		-		x					x											LF FREQU } rh					6	-/SWEEP OUT		⌒> 10,5 Vpp		OSC
9.1.2					x																LF AMPL. } rh								⌒= 10±0,2 Vpp		
9.2.					-	x				x											LF AMPL.								∿= 10±0,5 Vpp	623 (638)Δ	
10.	Frequency mark control																				LF FREQU. } rh						-/SWEEP OUT ——				x_{IN} } (1V/div) OSC
10.1.				x	x	-	x						x								RF WIDTH, RF CENTER, MARK AMPL } rh						y —— OUT ——				y_{IN}
10.2.1				x	x		x						x								LF AMPL.										x Basis: 10 div
10.2.2				x	x		x						x								f_l SETTING f_r								f_l f_r		$\Delta f = f_r - f_l \geqq 50$ kHz
10.2.3				x	x		-	x					-				x												$\Delta f \geqq 1$ MHz		
10.2.4				x	x			-	x								-		x										$\Delta f \geqq 10$ MHz	652	
10.2.5				x	x				-	x									-	x									$\Delta f \geqq 1$ MHz		
10.2.6				x	x			x									x			-	RF WIDTH								Mark.ampl.2Vpp		max. 5 Vpp
10.3.1				x	x		x						x				-				RF CENTER or SETTING	x PULL									Mark in mid.-position
10.3.2				x	x		x						x									-									Marker distance: 10 kHz
10.4.1				x	x		-	x					-									x									
10.4.2				x	x			x														-									100 kHz
10.5.1				x	x			-	x									-	x			x									
10.5.2				x	x				x										x			-									1 MHz
10.6.1				x	x				-	x									-	x		x									
10.6.2				x	x					x										x		-									100 kHz
10.7.				x	x	x		x		-							x			-	l_h LF PHASE r_h										Bring marks into coincidence
11.	ATTENUATION, unit 5																														B & K (selective voltmeter)
11.1.				-	-	-		-									-			x	SETTING 100 MHz		0	3		5	RF OUT		3 ± o,5 dB		Check output level acc. to 4.3.5... and correct, if necessary.
11.2.																				x			0	40					40 ± 2 dB		
11.3.																				x			20	0					20 dB ± 2 dB		if tolerance is exceeded: turn 601/U5 rh;
11.4.																				x			40	0					40 dB ± 2 dB		read amplitude in dB;
11.5.																				x			60	0					60 dB ± 2 dB		attenuate this amplitude to 20 dB by 601/U5; fix the 20 dB mark of the scale to the 20 dB mark of the text-
11.6																				x			80	0					80 dB		plate, without altering 601/U5.

4.4. CHECKS AFTER REPAIR AND MAINTENANCE

Checking the protective leads

The correct connection and condition is checked by visual control and by measuring the resistance between the protective-lead connection at the plug and the cabinet.

The resistance should be $< 0.5\ \Omega$. During measurement the mains cable should be moved. Resistance variations indicate a defect.

Checking the insulating resistance

Measure the insulating resistance at U— = 500 V between the mains connection and the protective lead connection. For this purpose set the mains switch to ON. The insulating resistance should be $> 2\ M\ \Omega$.

4.5. PARTS LIST

4.5.1. Mechanical parts, miscellaneous, electrical parts not on units

Item	Fig.	Quantity	Order number	Description
1	8	1	5322 447 94324	Cover (without carrying handle)
2	8	4	5322 462 44174	Foot (bottom side)
3	8	2	5322 520 34164	Bearing bush
4	8	2	5322 530 84075	Spring
5	8	2	5322 528 34101	Ratchet
6	8	2	5322 498 54048	Arm of carrying handle
7	8	2	5322 414 64053	Knob
8	8	1	5322 447 94188	Back frame
9	8	4	5322 462 44176	Foot (rear side)
10		1	5322 502 24525	Coin-slot screw
11		1	4822 530 70124	Locking washer for pos. 10
12	8	5	5322 414 34075	Control knob (601, 602, 603, 604, 605)
13	8	4	5322 414 74029	Cover of knob (601, 602, 603 and 604)
14	8	1	5322 414 74015	Cover of knob (605)
15	8	3	5322 414 34082	Control knob (601, 603, 801)
16	8	2	5322 414 74015	Cover of knob (603, 801)
17	8	1	5322 414 34128	Control knob (550)
18	8	1	5322 414 74022	Cover of knob (550)
19	9	5	5322 535 94868	Axis V, l=160 mm
20	8	1	5322 455 74076	Textplate
21	10	1	5322 325 60119	Mains cable grommet
22	10	1	5322 325 54067	Grommet
23	9,10	2	5322 526 44139	Coupling
24	10	2	5322 526 44138	Coupling
24a	9	1		Coupling
25	8	21	5322 414 25851	Knob of pushbutton switch
26	8	1	5322 459 24076	Front frame
27	10	2	5322 290 64202	Soldering terminal
28	10	1	5322 401 14227	Cable binder
29	10	1	5322 255 44175	Mica washer
30	10	1	5322 532 54266	Isolating washer
31	10	1	5322 256 34019	Fuse holder
32	10	1	5322 276 14128	Mains switch (851)
33	8	1	5322 459 24077	Window
34	8	6	5322 267 10004	BNC Connector (810,812-816)
35	8	1	5322 532 54416	Isolating socket
36	9	6	5322 255 44122	IC 14-pole socket
37	9	1	5322 255 44047	IC 28-pole socket
38	13	10	5322 276 84066	Pushbutton switch (801/1-10) U6
39	13	3	5322 276 34052	Pushbutton switch (802/3/5/6) U6
40	13	4	5322 276 44072	Pushbutton switch (802/8-11) U6
41	13	3	5322 276 34053	Pushbutton switch (802/1/2/4) U6

Item	Fig.	Quantity	Order number	Description
42	9	1	5322 216 64287	Unit 1
43	9	1	5322 216 64288	Unit 2
44	9	1	5322 216 64289	Unit 3 complete
45	10	1	5322 216 64285	Unit 4
46	9	1	5322 216 64286	Unit 6
47	8	2	5322 532 54425	Ring for carrying handle
48	8	1	5322 498 54051	Carrying handle
49	9	1	5322	Unit 8 complete
50	8	1		Scale (601/U5)

NOT ON UNITS (see mainly figs. 9, 10, 17)

ITEM	ORDERING NUMBER	FARAD	TOL (%)	VOLTS	REMARKS
301	5322 130 44325	BD201			
501	4822 122 30103	22N	-20+80		CERAMIC PLATE
502	5322 121 44227	2X2,5 N		250	POLYESTER FOIL
503	5322 124 10079	27MU			ELECTROLYTIC
550	5322 125 14014	12-400P 5			TUNING CAPACITOR

ITEM	ORDERING NUMBER	OHM	TOL (%)	REMARKS
RESISTORS				
601	5322 102 34006	2X22K		CARBON TANDEM POTM
602	4822 101 20416	4,7K		CARBON POTM LIN
603	5322 102 14008	4,7K+1K		CARBON TWIN POTM
604,605	4822 101 20416	4,7K		CARBON POTM LIN
606	5322 116 54547	953	1	METAL FILM
608	4822 110 63187	1M	5	CARBON
609	5322 116 54696	100K	1	METAL FILM

ITEM	ORDERING NUMBER		
801-807	5322 121 44228	FKE-ELEMENT 350	POLYESTER FOIL

MISCELLANEOUS

1	5322 455 74074	VOLTAGE LABEL 230V
1	5322 455 74075	VOLTAGE LABEL 115V
1	4822 253 30007	FUSE 125MA/250V(754)
1	4822 253 30013	FUSE 250MA/250V
1	5322 321 14048	MAINS CABLE
1	5322 390 20019	SILICON PASTE DC340
1	5322 146 24188	MAINS TRANSFORMER(753)
1	5322 255 44129	COOLING ELEMENT FOR TRANSISTOR 352/U6
1	5322 321 24557	CODE LINE 4 FOR UNIT 4
1	5322 321 24556	CODE LINE 1 FOR UNIT 1
1	5322 255 44108	TRANSISTOR PLATE FOR 304/U4
87	5322 466 94547	SPACER
9	5322 532 54095	CERAMIC TUBE 3 MM

4.5.2.

ELECTRICAL PARTS

ELECTRICAL PARTS U1

301	5322 130 44745	BF327
302,303	4822 130 44196	BC548C omitted from LO 031600 onward
304,305	5322 130 44237	BF450
306	4822 130 40902	BF240
307,308	4822 130 44196	BC548C
309	5322 130 44415	BD263
INTEGRATED CIRCUITS/U1		
351	5322 209 85798	MC10116P
352	5322 209 85805	MC1648P
353	5322 209 84267	N7445B
354	5322 209 85802	MC10131P
355	5322 209 84321	N74S03A
356,357	5322 209 85741	N74S112B
358,359	5322 209 85255	N74LS90A
360	5322 209 85265	N74LS03N
361	5322 209 85255	N74LS90A
362	5322 209 85265	N74LS03N
363	5322 209 84703	MC4044P
DIODES/U1		
401	5322 130 34478	BB113

ITEM	ORDERING NUMBER	FARAD	TOL (%)	VOLTS	REMARKS
CAPACITORS/U1					
501,502,503	4822 122 30103	22N	-20+80	63	CERAMIC PLATE
504	5322 122 44012	100N	-20+80	63	CERAMIC DISK
505	5322 121 40175	470N	10	100	POLYESTER FOIL
506	4822 124 20454	150MU		6,3	ELECTROLYTIC
507-510	4822 122 30103	22N	-20+80	63	CERAMIC PLATE
511	4822 124 20454	150MU		6,3	ELECTROLYTIC
512	5322 122 44012	100N	-20+80	63	CERAMIC DISK
513	4822 122 30103	22N	-20+80	63	CERAMIC PLATE
514	4822 121 40232	220N	10	100	POLYESTER FOIL
515	5322 121 40197	1MU	10	100	POLYESTER FOIL
516-519	4822 122 30103	22N	-20+80	63	CERAMIC PLATE
516	5322 122 44012	100N		IN SERIES 01/02	
520	4822 124 20454	150MU		6,3	ELECTROLYTIC
521	4822 121 40232	220N	10	100	POLYESTER FOIL
522	5322 125 54001	4-30P		50	TRIMMER
523	4822 122 31061	18P	2	100	CERAMIC PLATE
524	4822 122 30045	27P	2	100	CERAMIC PLATE
525	4822 122 31072	47P	2	100	CERAMIC PLATE
526,527	4822 121 50389	3,3N	1	63	POLYSTYRENE FOIL
528	4822 121 40231	150N	10	100	POLYESTER FOIL
529,531	4822 122 30103	22N	-20+80	63	CERAMIC PLATE
533	5322 121 40175	470N	10	100	POLYESTER FOIL
534-536	4822 122 30103	22N	-20+80	63	CERAMIC PLATE
537	5322 121 40175	470N	10	100	POLYESTER FOIL

ITEM	ORDERING NUMBER	OHM	TOL (%)	TYPE	REMARKS
RESISTORS/U1					
601-605	5322 116 54534	681	1	MR25	METAL FILM
606	5322 116 54516	365	1	MR25	METAL FILM
607	5322 116 54005	3,32K	1	MR25	METAL FILM
608	5322 116 50483	38,3K	1	MR25	METAL FILM
609	5322 116 50636	2,74K	1	MR25	METAL FILM omitted from LO 03 1600 onward
611,612	5322 116 54619	10K	1	MR25	METAL FILM omitted from LO 03 1600 onward
613	5322 116 50484	4,64K	1	MR25	METAL FILM omitted from LO 03 1600 onward
615	5322 116 54534	681	1	MR25	METAL FILM
616	4822 111 30069	39	5		CARBON
617	5322 116 54534	681	1	MR25	METAL FILM
618	5322 116 54549	1,0K	1	MR25	METAL FILM
619	4822 111 30327	220	5		CARBON
621	5322 116 54489	169	1	MR25	METAL FILM
622	5322 116 50508	487	1	MR25	METAL FILM
623,624	5322 116 54571	1.96K	1	MR25	METAL FILM
625	5322 116 50452	10	1	MR25	METAL FILM
627	5322 116 54534	681	1	MR25	METAL FILM
628	4822 111 30327	220			CARBON
629	4822 110 63041	39	5		CARBON
631	5322 116 54549	1,0K	1	MR25	METAL FILM
632	5322 116 54619	10K	1	MR25	METAL FILM
633	5322 116 50481	22,6K	1	MR25	METAL FILM
634	5322 116 54504	274	1	MR25	METAL FILM
635	5322 116 50199	2,74K	1	MR25	METAL FILM
636	5322 116 50636	1,0K	1	MR25	METAL FILM
637	5322 116 50479	15,4K	1	MR25	METAL FILM
638	5322 116 54549	1,0K	1	MR25	METAL FILM
639,641,642	5322 116 54571	1,96K	1	MR25	METAL FILM
643	5322 116 54534	681	1	MR25	METAL FILM
644	5322 116 54619	10K	1	MR25	METAL FILM
645	5322 116 50199	2,74K			METAL FILM

COILS/U1

751,752	5322 526 14027	
753	5322 158 14218	
754	5322 158 14219	
755	5322 158 14221	
756	5322 158 14222	
757	5322 158 14223	
758	5322 158 14224	
759	5322 158 14225	
760	5322 158 14226	

MISCELLANEOUS/U1

801-810	5322 280 24047	RELAIS	until LO 02 1599
801-810	4822 280 20064	RELAIS	from LO 03 1600 onward

ELECTRICAL PARTS/U2

INTEGRATED CIRCUITS

351	5322 209 85801	N74LS09A
352	5322 209 85809	ICM7208IPI
353	5322 130 34737	HP5082-7760
401-403	4822 130 30922	CQY24A

ITEM	ORDERING NUMBER	FARAD	TOL (%)	VOLTS	REMARKS
CAPACITORS/U2					
502,503	4822 122 30103	22N	-20+80	63	CERAMIC PLATE
504	4822 122 30043	10N	-20+80	63	CERAMIC PLATE

ITEM	ORDERING NUMBER	OHM	TOL (%)	TYPE	REMARKS
601-607	5322 116 54446	56,2	1	MR25	METAL FILM
608,609	5322 116 54696	100K	1	MR25	METAL FILM
610-613	5322 116 54536	750	1	MR25	METAL FILM
614-616	5322 116 50592	442	1	MR25	METAL FILM
617	5322 116 54549	1K	1	MR25	METAL FILM

ELECTRICAL PARTS/U3

301,302	4822 130 44196	BC548C
INTEGRATED CIRCUITS		
351	5322 209 84998	N74LS93A
352-357	5322 209 85255	N74LS90A
358	5322 209 85265	N74LS03N
359	5322 209 84986	N74LS74A
360	5322 209 85508	N74LS221B
361	5322 209 85265	N74LS03N

ITEM	ORDERING NUMBER	FARAD	TOL (%)	VOLTS	REMARKS
CAPACITORS/U3					
501	4822 122 31056	12P	2	100	CERAMIC PLATE
502	5322 125 54001	4-30P			TRIMMER
503	4822 122 31173	220P	2	100	CERAMIC PLATE
504	4822 122 30093	120P	2	100	CERAMIC PLATE
505	4822 121 40232	220N	10	100	POLYESTER FOIL
506	4822 122 31175	1N	10	100	CERAMIC PLATE
507-513	4822 122 30103	22N	-20+80	63	CERAMIC PLATE
514	4822 122 31175	1N	10	100	CERAMIC PLATE
515	4822 122 30103	22N	-20+80	63	CERAMIC PLATE
516	4822 122 31175	1N	10	100	CERAMIC PLATE
517	4822 122 30103	22N	-20+80	63	CERAMIC PLATE
518	4822 124 20454	150MU		6,3	ELECTROLYTIC
519	4822 122 30103	22N	-20+80	63	CERAMIC PLATE

ITEM	ORDERING NUMBER	OHM	TOL (%)	TYPE	REMARKS
RESISTORS/U3					
601	5322 116 54469	100	1	MR25	METAL FILM
602,603	5322 116 50557	46,4K	1	MR25	METAL FILM
604	5322 116 50506	154	1	MR25	METAL FILM
605,	5322 116 50586	1,54K	1	MR25	METAL FILM
606	5322 116 50479	15,4K	1	MR25	METAL FILM
607	5322 116 54549	1K	1	MR25	METAL FILM
608,609	5322 116 50572	12K3	1	MR25	METAL FILM
611,612	5322 116 54571	1,96K	1	MR25	METAL FILM

771	4822 242 70258	4,0000MZ	X-TAL

ELECTRICAL PARTS/U4

301-303	4822 130 40902	BF240
304	5322 130 40686	BSX19
305,306	4822 130 44196	BC548C
307,308	4822 130 40902	BF240
309,310	5322 130 44237	BF450
311	4822 130 44196	BC548C
INTEGRATED CIRCUITS/U4		
351	5322 209 85797	NE550A
352	5322 209 85807	MC1658P
353	5322 209 85798	MC10116P
354	5322 209 85808	TBA400D
355	5322 209 85804	MUA733A
356	5322 209 85803	MC1496A
357	5322 209 14064	HEF4518BP
358	5322 209 85265	N74LS03N
DIODES/U4		
401-403	4822 130 31012	AA119
404	4822 130 30613	BAW62
405	4822 130 34233	BZX79-B5V1
406	4822 130 30613	BAW62
407,408	5322 130 34297	BZX79-B10

ITEM	ORDERING NUMBER	FARAD	TOL (%)	VOLTS	REMARKS
CAPACITORS/U4					
501	5322 121 40197	1MU	10	100	POLYESTER FOIL
502	4822 122 31177	470P	10	100	CERAMIC PLATE
503,504	4822 122 30103	22N	-20+80	63	CERAMIC PLATE
505	4822 122 31177	470P	10	100	CERAMIC PLATE
506-508	4822 122 30103	22N	-20+80	63	CERAMIC PLATE
509	4822 122 31081	100P	2	100	CERAMIC PLATE
510	5322 125 54027	1-5,5P		400	TRIMMER
511	4822 122 31052	8,2P	0,25P	100	CERAMIC PLATE
512	4822 122 31069	39P	2	100	CERAMIC PLATE
513	4822 122 31041	3,3P	0,25P	100	CERAMIC PLATE
514	4822 121 50432	1,5N	1	63	POLYSTYRENE FOIL
515-520	4822 122 30103	22N	-20+80	63	CERAMIC PLATE
521	4822 122 31054	10P	2	100	CERAMIC PLATE
522	4822 124 20461	47MU		10	ELECTROLYTIC
523	4822 122 30103	22N	-20+80	63	CERAMIC PLATE
524	4822 122 31175	1N	10	100	CERAMIC PLATE
525	4822 124 20461	47MU		10	ELECTROLYTIC
526-528	4822 122 30103	22N	-20+80	63	CERAMIC PLATE
529	4822 124 20461	47MU		10	ELECTROLYTIC
530-538	4822 122 30103	22N	-20+80	63	CERAMIC PLATE
539	5322 122 44012	100N	-20+80	63	CERAMIC DISK
540	4822 122 30103	22N	-20+80	63	CERAMIC PLATE
541	4822 122 31045	4,7P	0,25P	100	CERAMIC PLATE
542,544	4822 122 30103	22N	-20+80	63	CERAMIC PLATE
545	4822 122 30093	120P	2	100	CERAMIC PLATE
546-548	4822 122 30103	22N	-20+80	63	CERAMIC PLATE
549	4822 124 20469	68MU		16	ELECTROLYTIC

ITEM	ORDERING NUMBER	FARAD	TOL (%)	VOLTS	REMARKS
550-551	4822 122 30103	22N	-20+80	63	CERAMIC PLATE
552	4822 124 20469	68MU		16	ELECTROLYTIC
553-556	4822 122 30103	22N	-20+80	63	CERAMIC PLATE
557	5322 124 14069	3,3 MU	10	250	POLYESTER FOIL
558	4822 122 30103	22N	-20+80	63	CERAMIC PLATE
560	4822 122 31177	470P	10	100	CERAMIC PLATE
561	4822 122 30128	4,7N	10	100	CERAMIC PLATE
562	5322 122 44012	100N	-20+80	63	CERAMIC DISK

ITEM	ORDERING NUMBER	OHM	TOL (%)	TYPE	REMARKS
RESISTORS/U4					
601	4822 110 63041	3,3	5		CARBON
602	5322 116 54541	825	1	MR25	METAL FILM
603	5322 116 50664	2,05	1	MR25	METAL FILM
604	4822 100 10038	470	20	0,1	TRIMMING POTM
605,606	5322 116 54009	562	1	MR25	METAL FILM
607	5322 116 54545	909	1	MR25	METAL FILM
608	5322 116 54009	562	1	MR25	METAL FILM
609	5322 116 54525	511	1	MR25	METAL FILM
611	5322 116 54442	51,1	1	MR25	METAL FILM
612	5322 116 54558	8,25K	1	MR25	METAL FILM
613	5322 116 54525	511	1	MR25	METAL FILM
614	5322 116 54442	51,1	1	MR25	METAL FILM
615,616	5322 116 50608	6,19K	1	MR25	METAL FILM
617	5322 116 54595	5,11K	1	MR25	METAL FILM
618	5322 116 54442	51,1	1	MR25	METAL FILM
619	5322 116 54525	511	1	MR25	METAL FILM
620	5322 116 54442	51,1	1	MR25	METAL FILM
621	5322 116 54595	5,11K	1	MR25	METAL FILM
622	5322 116 54655	30,1K	1	MR25	METAL FILM
627	5322 116 54516	365	1	MR25	METAL FILM
628	5322 116 54009	562	1	MR25	METAL FILM
629	5322 116 54525	511	1	MR25	METAL FILM
630	5322 116 50766	147	1	MR25	METAL FILM
631	5322 116 54009	562	1	MR25	METAL FILM
632	5322 116 54442	51,1	1	MR25	METAL FILM
633	5322 116 54508	301	1	MR25	METAL FILM
634	4822 100 10038	470	20	0,1	TRIMMING POTM
635	5322 116 54624	11,5K	1	MR25	METAL FILM
636	5322 116 54442	51,1	1	MR25	METAL FILM
637	5322 116 54557	1,21K	1	MR25	METAL FILM
638	5322 116 54595	5,11K	1	MR25	METAL FILM
639	5322 116 54648	24,9K	1	MR25	METAL FILM
641	5322 116 50729	4,22K	1	MR25	METAL FILM
642	5322 116 54643	20,5K	1	MR25	METAL FILM

ITEM	ORDERING NUMBER	OHM	TOL (%)	TYPE	REMARKS
643	5322 116 50506	154	1	MR25	METAL FILM
644	5322 116 54613	8,66K	1	MR25	METAL FILM
645	4822 100 10038	470	20	0,1	TRIMMING POTM
646	5322 116 54617	9,53K	1	MR25	METAL FILM
647	5322 116 54279	115K	1	MR25	METAL FILM
648	5322 116 54011	5,62K	1	MR25	METAL FILM
649	5322 116 50672	51,1	1	MR25	METAL FILM
651	5322 116 50536	464	1	MR25	METAL FILM
652	5322 116 50493	27,4	1	MR25	METAL FILM
653	5322 116 50457	215	1	MR25	METAL FILM
654-656	5322 116 50608	6,19K	1	MR25	METAL FILM
657	5322 116 50572	12,1K	1	MR25	METAL FILM
658	5322 116 54469	100	1	MR25	METAL FILM
659	5322 116 50731	10,5K	1	MR25	METAL FILM
660	5322 116 54442	51,1	1	MR25	METAL FILM
662	5322 116 54558	8,52K	1	MR25	METAL FILM
663	5322 116 50672	51,1K	1	MR25	METAL FILM
664	5322 116 54459	75	1	MR25	METAL FILM
665	4822 110 63034	1,8	5		CARBON
666	5322 116 54554	1,1K	1	MR25	METAL FILM
667	5322 116 54469	100	1	MR25	METAL FILM
668	5322 116 50524	3,01K	1	MR25	METAL FILM
669	5322 116 50515	1,78K	1	MR25	METAL FILM
670	5322 116 50572	12,1K	1	MR25	METAL FILM
671	5322 116 54557	1,21K	1	MR25	METAL FILM
672	5322 116 54643	20,5K	1	MR25	METAL FILM
673	5322 116 54557	1,21K	1	MR25	METAL FILM
674-675	5322 116 50572	12,1K	1	MR25	METAL FILM
676	5322 116 54615	9,09K	1	MR25	METAL FILM
677	4822 100 10038	470	20	0,1	TRIMMING POTM
678	5322 116 50555	1,27K	1	MR25	METAL FILM
679	5322 116 50524	3,01K	1	MR25	METAL FILM
680	5322 116 54508	301	1	MR25	METAL FILM
681,682	5322 116 54525	511	1	MR25	METAL FILM
683,684	5322 116 50491	22,6	1	MR25	METAL FILM

ITEM	ORDERING NUMBER	TYPE/DESCRIPTION
COILS/U4		
751-753	5322 158 14004	15MUH
MISCELLANEOUS/U4		
801-806	5322 280 24047	RELAIS

ITEM	ORDERING NUMBER	OHM	TOL (%)	TYPE	REMARKS

ELECTRICAL PARTS/U5

replacement procedure see 4.2.7

601	5322 105 40007	75			ATTENUATOR
602,602	5322 116 50621	536	1	MR25	METAL FILM
604	5322 116 50876	26,1	1	MR25	METAL FILM
605,606	5322 116 54466	90,1	1	MR25	METAL FILM
607	5322 116 54518	383	1	MR25	METAL FILM
608,609	5322 116 54466	90,9	1	MR25	METAL FILM
610	5322 116 54518	383	1	MR25	METAL FILM

ITEM	ORDERING NUMBER	TYPE/DESCRIPTION
801	5322 273 84029	ROTARY SWITCH

ELECTRICAL PARTS U6

303	5322 130 44744	BF256B
304	4822 130 44196	BC548C
305	4822 130 40823	BD139
306	4822 130 44196	BC548C
307,308	4822 130 44197	BC558B

INTEGRATED CIRCUITS/U6

351	5322 209 85797	NE550A
352	5322 209 85603	7812CU
353	5322 209 85426	N74LS13A
354	5322 209 84111	CA3086
355	5322 209 85799	NE566V
356,357	5322 209 85806	LM348N
358	5322 209 84986	N74LS74A
	5322 209 85724	7912CU

DIODES/U6

401,402	4822 130 30414	BY164
403,404	4822 130 30195	BYX10
405	5322 130 34379	BZX79-B27
406-412	4822 130 30613	BAW62

ITEM	ORDERING NUMBER	FARAD	TOL (%)	VOLTS	REMARKS
CAPACITORS/U6					
501	5322 124 24084	2200MU		16	ELECTROLYTIC
502	4822 122 31177	470P	10	100	CERAMIC PLATE
503	4822 122 30103	22N	-20+80	63	CERAMIC PLATE
504,505	4822 124 20529	1000MU		25	ELECTROLYTIC
506-509	4822 122 30103	22N	-20+80	63	CERAMIC PLATE
510	5322 124 24202	2,2MU			ELECTROLYTIC
514,515	4822 124 20487	47MU		40	ELECTROLYTIC
516	4822 122 30103	22N	-20+80	63	CERAMIC PLATE
517	5322 121 40308	22N	10	250	POLYESTER FOIL
518,519	4822 122 30103	22N	-20+80	63	CERAMIC PLATE
520	5322 124 24202	2,2MU		63	ELECTROLYTIC
521	5322 121 40233	680N	10	100	POLYESTER FOIL
524	4822 124 20457	470MU		6,3	ELECTROLYTIC
527,528	4822 121 40231	150N	10	100	POLYESTER FOIL
529,530	5322 121 40175	470N	10	100	POLYESTER FOIL
531	4822 124 20469	68MU		16	ELECTROLYTIC
532	4822 122 31175	1N	10	100	CERAMIC PLATE
533	5322 124 14069	3,3MU		15	ELECTROLYTIC TANT
534	4822 124 20461	47MU		10	ELECTROLYTIC
535	5322 124 24201	1MU		63	ELECTROLYTIC
536	4822 124 20461	47MU		10	ELECTROLYTIC
537	5322 124 24201	1MU		63	ELECTROLYTIC
538,539	5322 121 40323	100N	10	100	POLYESTER FOIL
540	4822 124 20461	47MU		10	ELECTROLYTIC
541	5322 121 40197	1MU	10	100	POLYESTER FOIL
542-545	4822 122 30103	22N	-20+80	63	CERAMIC PLATE
546	4822 121 41156	68N	10	100	POLYESTER FOIL
548	4822 122 31175	1N	10	100	CERAMIC PLATE
549	5322 121 40308	22N	10	250	POLYESTER FOIL
550	4822 122 30128	4,7N	10	100	CERAMIC PLATE
551	5322 121 40283	3,3MU	10	100	POLYESTER FOIL
552,553	4822 124 20476	22MU		25	ELECTROLYTIC

ITEM	ORDERING NUMBER	OHM	TOL (%)	TYPE	REMARKS
RESISTORS/U6					
601	4822 110 63034	1,8	5		CARBON
602	5322 116 54571	1,96K	1	MR25	METAL FILM
603	4822 100 10038	470	20	0,1	TRIMMING POTM
604	5322 116 54538	787	1	MR25	METAL FILM
609	5322 116 54696	100K	1	MR25	METAL FILM
610	4822 110 63187	1M	5		CARBON
611	5322 116 54469	100	1	MR25	METAL FILM
612	5322 116 54549	1K	1	MR25	METAL FILM
613	5322 116 50479	15,4K	1	MR25	METAL FILM
614	5322 116 54536	750	1	MR25	METAL FILM

ITEM	ORDERING NUMBER	OHM	TOL (%)	TYPE	REMARKS
615	5322 116 54571	1,96K	1	MR25	METAL FILM
616,617	5322 116 50484	4,64K	1	MR25	METAL FILM
618	5322 116 50669	205	1	MR25	METAL FILM
619	5322 116 50415	1,15K	1	MR25	METAL FILM
620	5322 116 54619	10K	1	MR25	METAL FILM
621	5322 116 50479	15,4K	1	MR25	METAL FILM
622	5322 116 54694	90,9K	1	MR25	METAL FILM
623	4822 100 10036	4,7K	20	0,1	TRIMMING POTM
624	5322 116 50524	3,01	1	MR25	METAL FILM
625	5322 116 54619	10K	1	MR25	METAL FILM
626	5322 116 54629	14K	1	MR25	METAL FILM
627	5322 116 50524	3,01K	1	MR25	METAL FILM
628	5322 116 54554	1,1K	1	MR25	METAL FILM
629	5322 116 54623	11K	1	MR25	METAL FILM
630	5322 116 50664	2,05K	1	MR25	METAL FILM
631	5322 116 50586	1,54K	1	MR25	METAL FILM
632	5322 116 50559	27,4K	1	MR25	METAL FILM
633	5322 116 50524	3,01K	1	MR25	METAL FILM
634	5322 116 54565	1,62K	1	MR25	METAL FILM
635	5322 116 54643	20,5K	1	MR25	METAL FILM
636	5322 116 50622	1,58K	1	MR25	METAL FILM
637	5322 116 50608	6,19K	1	MR25	METAL FILM
638	5322 116 54683	68,1K	1	MR25	METAL FILM
639	5322 116 50622	1,58K	1	MR25	METAL FILM
640	5322 116 50581	2,49K	1	MR25	METAL FILM
641	5322 116 54557	1,21K	1	MR25	METAL FILM
642,643	5322 116 54623	11K	1	MR25	METAL FILM
644	5322 116 50442	48,7K	1	MR25	METAL FILM
645	5322 116 50555	1,27K	1	MR25	METAL FILM
646	5322 116 54608	7,5K	1	MR25	METAL FILM
647	5322 116 50672	51,1K	1	MR25	METAL FILM
648	5322 116 54743	301K	1	MR25	METAL FILM
649	5322 116 54549	1K	1	MR25	METAL FILM
650	5322 116 55247	422K	1	MR25	METAL FILM
651	5322 116 54736	261K	1	MR25	METAL FILM
652	4822 100 10052	100K	20	0,1	TRIMMING POTM
653	5322 116 54595	5,11K	1	MR25	METAL FILM
654	5322 116 50415	1,15K	1	MR25	METAL FILM
655	5322 116 50766	147	1	MR25	METAL FILM
656	5322 116 54529	619	1	MR25	METAL FILM
657	5322 116 54474	11C	1	MR25	METAL FILM
658	5322 116 55247	422K	1	MR25	METAL FILM
660	5322 116 54511	316	1	MR25	METAL FILM
661	5322 116 50621	536	1	MR25	METAL FILM
662	4822 100 10019	220	20	0,1	TRIMMING POTM
663	5322 116 54466	90,9	1	MR25	METAL FILM
664	5322 116 54504	27,4	1	MR25	METAL FILM
665	5322 116 54506	287	1	MR25	METAL FILM
666	5322 116 54502	261	1	MR25	METAL FILM
667	5322 116 50621	536	1	MR25	METAL FILM
668	4822 100 10019	220	20	0,1	TRIMMING POTM
669	5322 116 50533	78,7K	1	MR25	METAL FILM

ITEM	ORDERING NUMBER	OHM	TOL (%)	TYPE	REMARKS
670	5322 116 54648	24,9K	1	MR25	METAL FILM
671	5322 116 54326	619K	1	MR25	METAL FILM
672	5322 116 54694	90,9K	1	MR25	METAL FILM
673	5322 116 54558	8,25K	1	MR25	METAL FILM
674	5322 116 54683	68,1K	1	MR25	METAL FILM
676	5322 116 50557	46,4K	1	MR25	METAL FILM
677	5322 116 50557	46,4K	1	MR25	METAL FILM
678	5322 116 54643	20,5K	1	MR25	METAL FILM
679,680	5322 116 50636	2,74K	1	MR25	METAL FILM
681	5322 116 50672	51,1K	1	MR25	METAL FILM
682	5322 116 54619	10K	1	MR25	METAL FILM
683	5322 116 50474	42,2K	1	MR25	METAL FILM
684	5322 116 50608	6,19	1	MR25	METAL FILM
685	5322 116 54519	402	1	MR25	METAL FILM
686	5322 116 54643	20,5	1	MR25	METAL FILM
687	5322 116 50572	12,1K	1	MR25	METAL FILM

ITEM	ORDERING NUMBER	TYPE/DESCRIPTION
COILS/U6		
751	5322 158 14004	15MUH

ELECTRICAL PARTS/U8

301	4822 130 44196	BC548C					
351	5322 209 14441	NE521N					
401	5322 130 34278	BZX79-B6V8					
501	5322 121 40197	1MU	10		100	POLYESTER FOIL
502,503	4822 122 30103	22N	-20+80		63	CERAMIC PLATE
601	5322 116 50479	15,4K	1		MR25	METAL FILM
602	5322 116 54549	1K	1		MR25	METAL FILM
603	5322 116 54615	9,09K	1		MR25	METAL FILM
604	4822 100 10035	10K		LIN		TRIMMING POTM

Figures

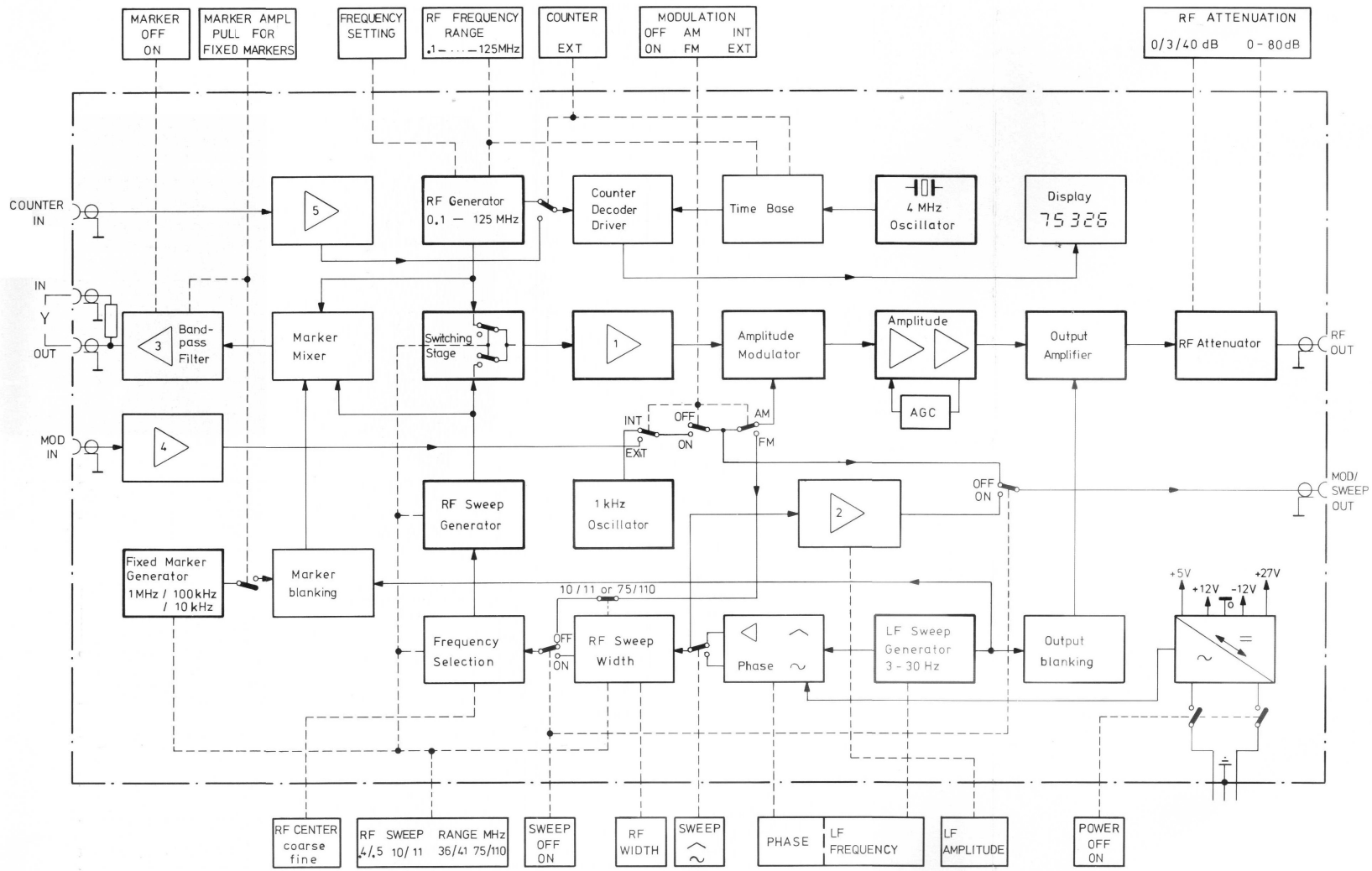

Fig. 1 Block diagram, complete
Blockschaltbild, gesamt
Schéma synoptique

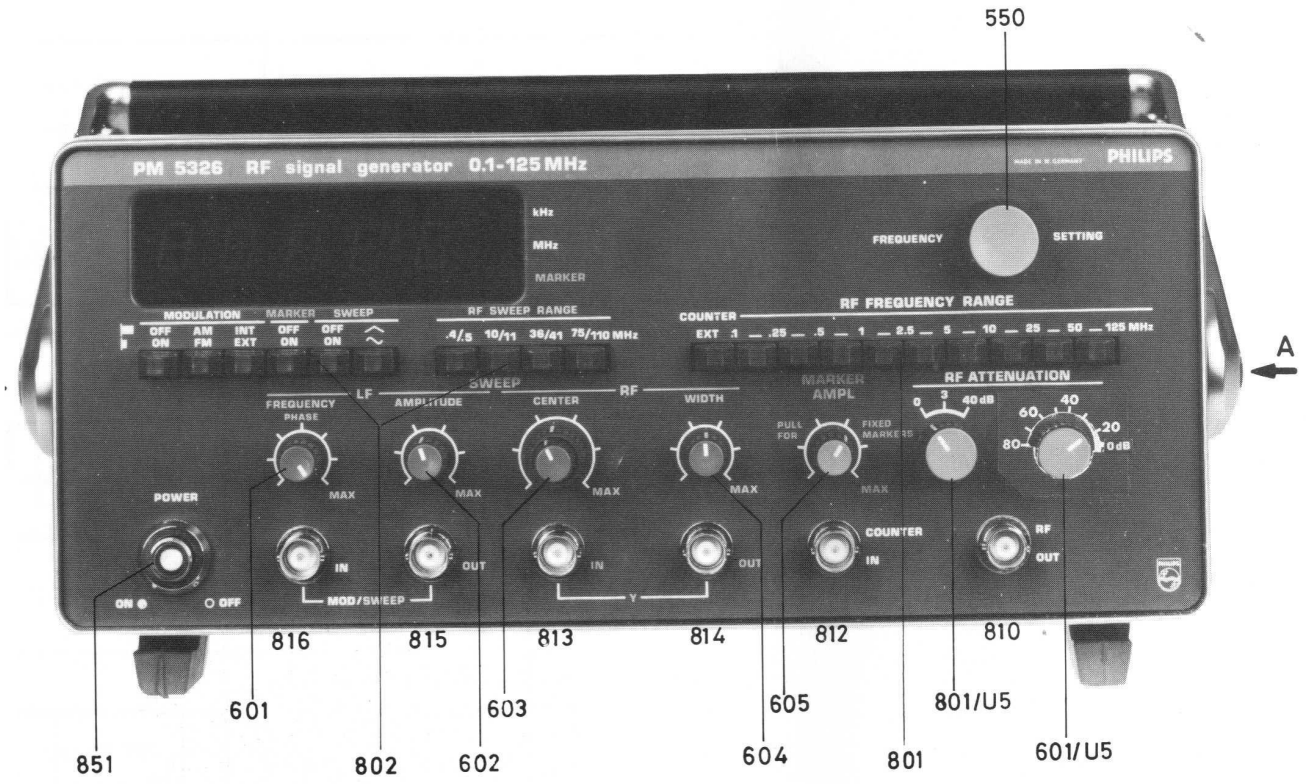

Fig. 2 Front view
Frontansicht
Face avant

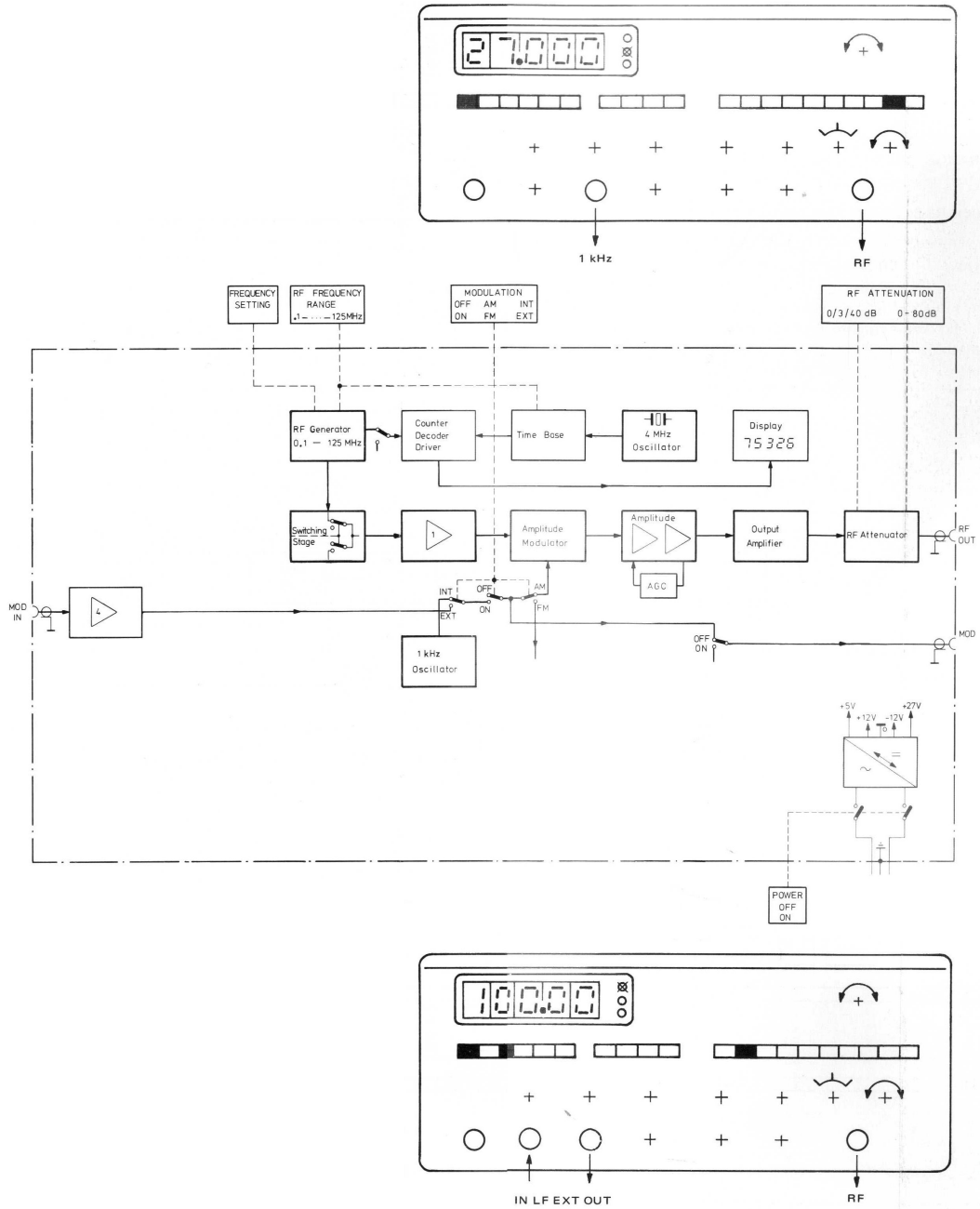

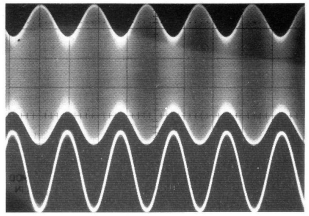

Internal AM signal, 1 kHz and 30% modulation depth at a carrier frequency of 27 MHz.

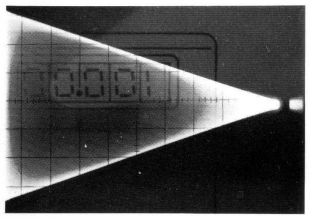

External AM signal, 400 Hz and 100% modulation depth at a RF carrier frequency of 100 kHz.

Fig. 3 Amplitude modulation
Amplitudenmodulation
Modulation d'amplitude

Calibration of the carrier frequency of the RF Sweep Generator (unit 8 not built in):

- Connect the LF indicator to the IN–Y or Y–OUT socket
- Press concerning buttons RF SWEEP RANGE and button RF FREQUENCY RANGE
- Adjust requested carrier frequency by FREQUENCY SETTING on the display
- Set LF indicator to maximum by RF CENTER
- Unlock button RF FREQUENCY RANGE
- Disconnect LF Indicator

Calibration of the carrier frequency of the RF Sweep Generator (unit 8 built in):

- Press only concerning buttons RF SWEEP RANGE and RF FREQUENCY RANGE.
- In instruments of the first series (up to LO 011100) additionally push the MARKER ON button.
- Adjust requested carrier frequency by FREQUENCY SETTING on the display.
- Turn RF SWEEP CENTER coarse and fine knobs until the MARKER lamp is flickering and dimmed at beat frequency.
- Unlock button RF FREQUENCY RANGE by pressing the COUNTER/EXT button.

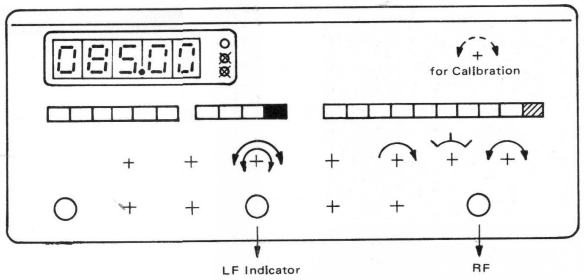

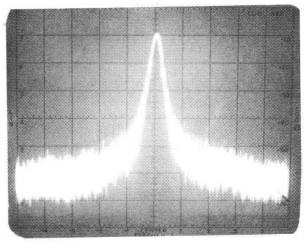

85 MHz unmodulated

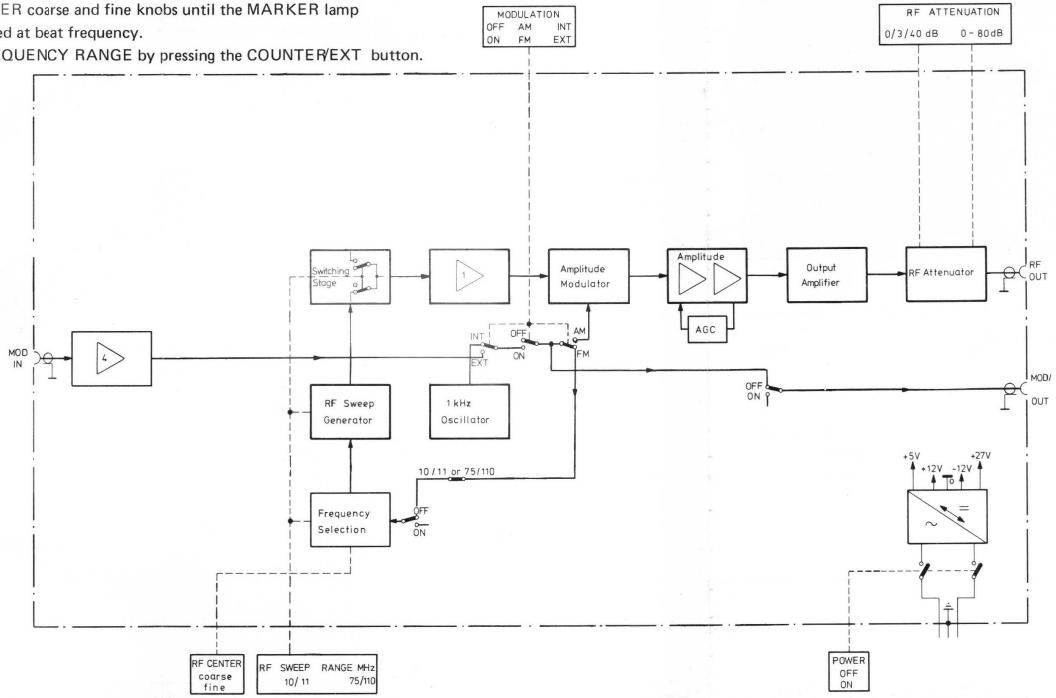

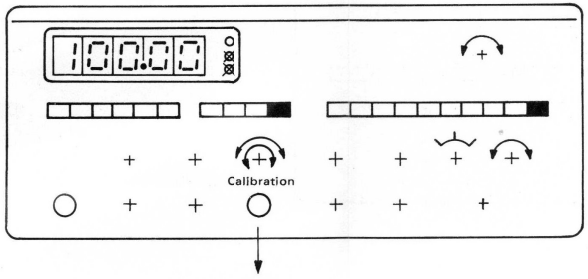

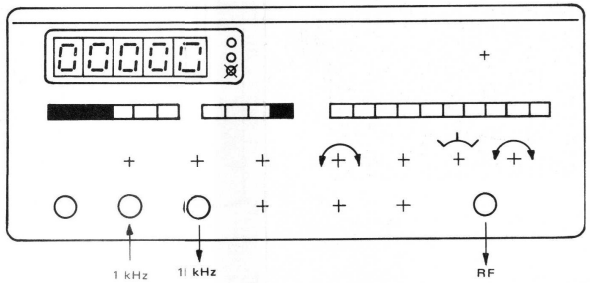

RF WIDTH

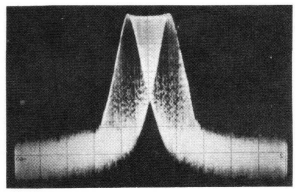

100 MHz ± 75 kHz modulated

Fig. 4 Frequency modulation, adjustment of carrier frequency
Frequenzmodulation, Kalibrierung der Trägerfrequenz
Modulation de fréquence, réglage de la fréquence porteuse

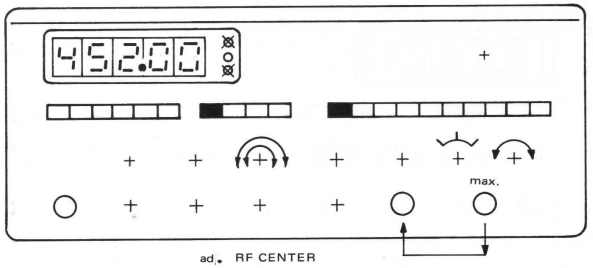

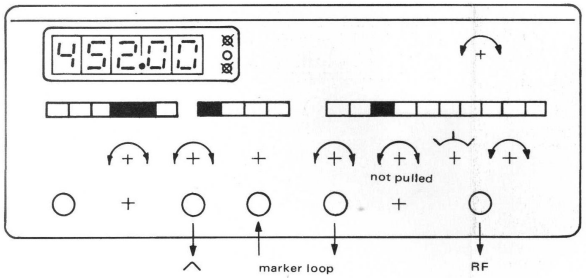

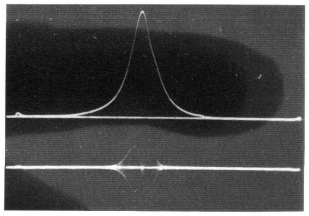

AM, IF curve and marker are shown separately on a dual trace oscilloscope PM 3226. The alignment is carried out at 452 kHz.

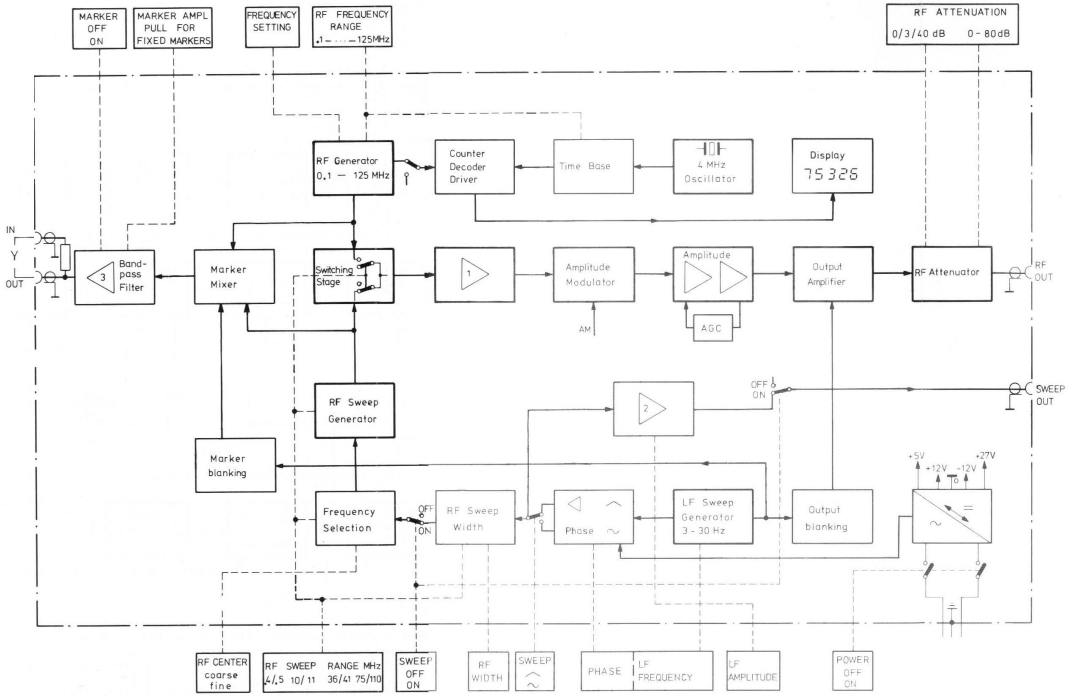

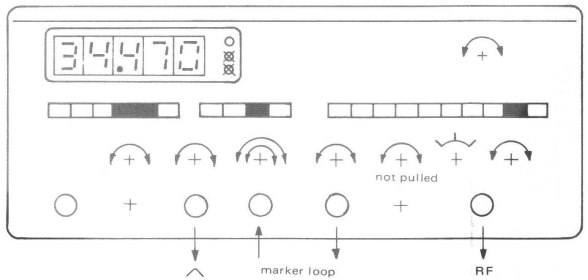

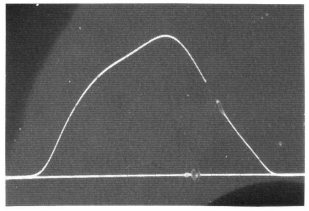

The luminance IF curve is aligned at its frequency of 34.47 MHz.

Fig. 5 Wobbling with adjustable frequency marker, adjustment of centre frequency (RF center)
Wobbeln, mit verschiebbarer Frequenzmarke, Einstellung der Mittenfrequenz (RF center)
Wobbulation avec marque décalable de fréquence, réglage de la fréquence centrale (RF center)

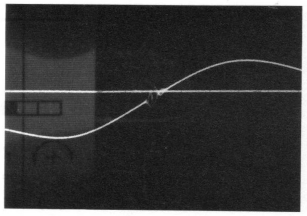

S curve of FM discriminator with variable marker set at 10.7 MHz.

not pulled

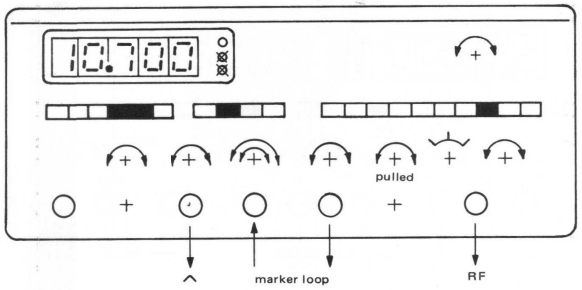

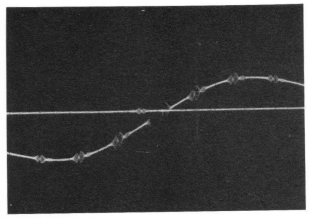

S curve with variable marker at 10.7 MHz and fixed markers at regular intervals of 100 kHz.

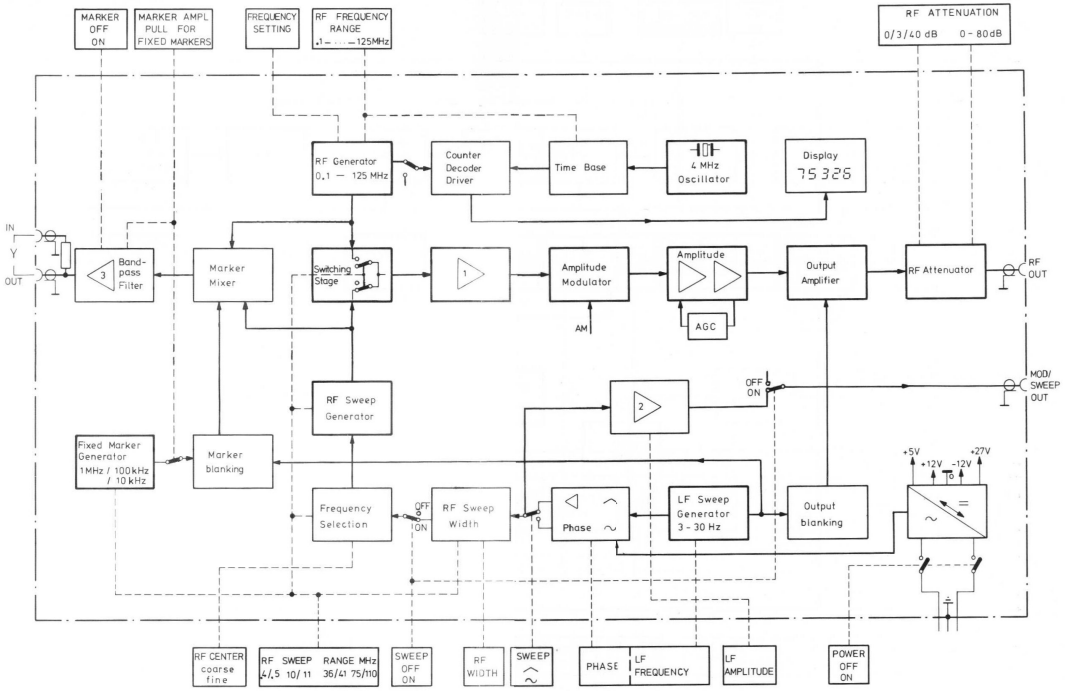

Fig. 6 Wobbling with adjustable frequency marker spectrum
Wobbeln, mit verschiebbarem Frequenzmarkenspektrum
Wobbulation avec spectre décalable de repères de fréquence

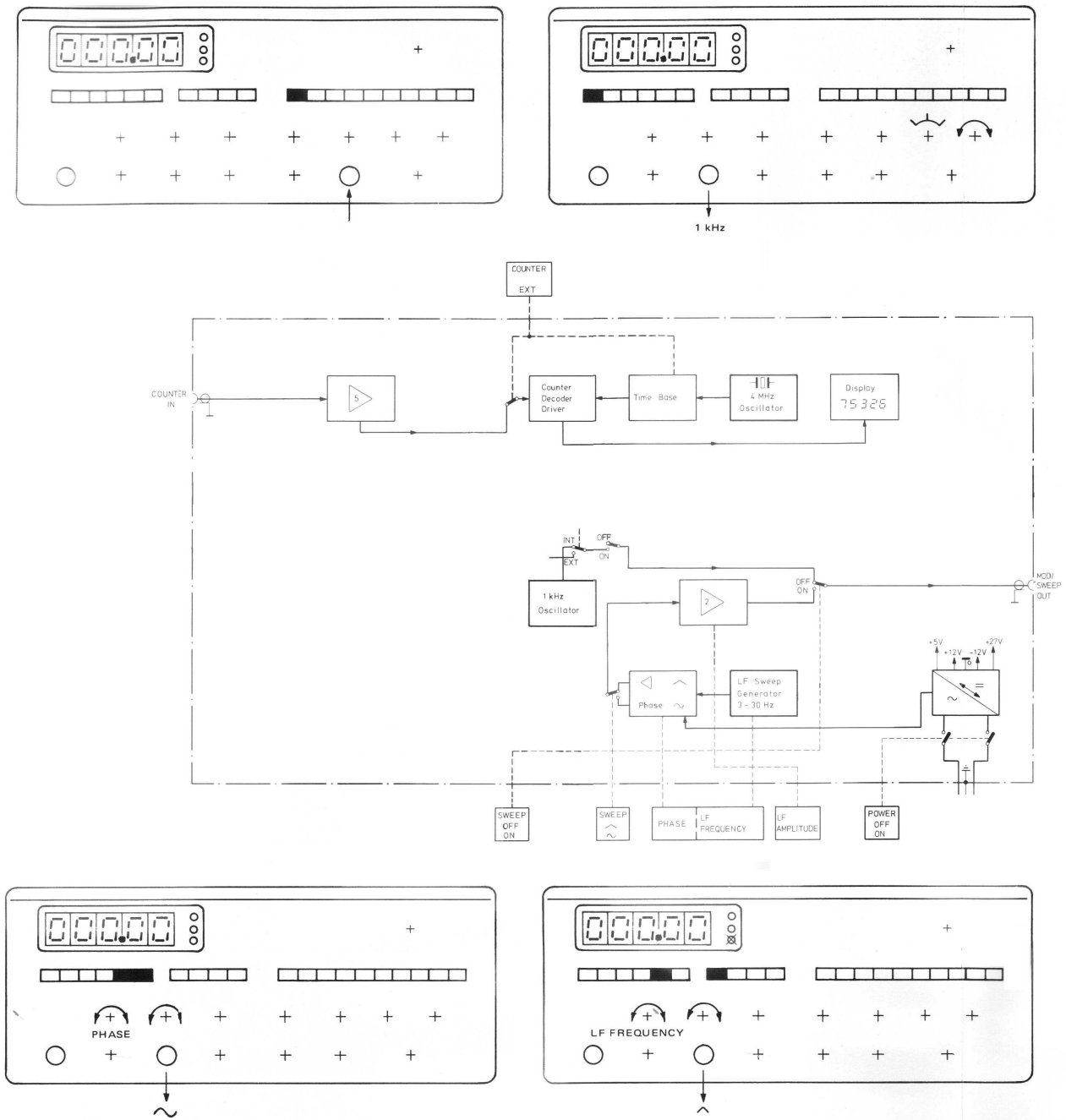

Fig. 7 External frequency counter; generator for 1 kHz sine, 3 – 30 Hz∧, mains frequency with phase shifter
Zähler für externe Frequenzen; Generator für 1 kHz sinus, für 3 – 30 Hz∧, für Netzfrequenz mit Phasenschieber
Compteur des fréquences externes; générateur pour 1 kHz sinus, 3 – 30 Hz∧, fréquence secteur avec déphaseur

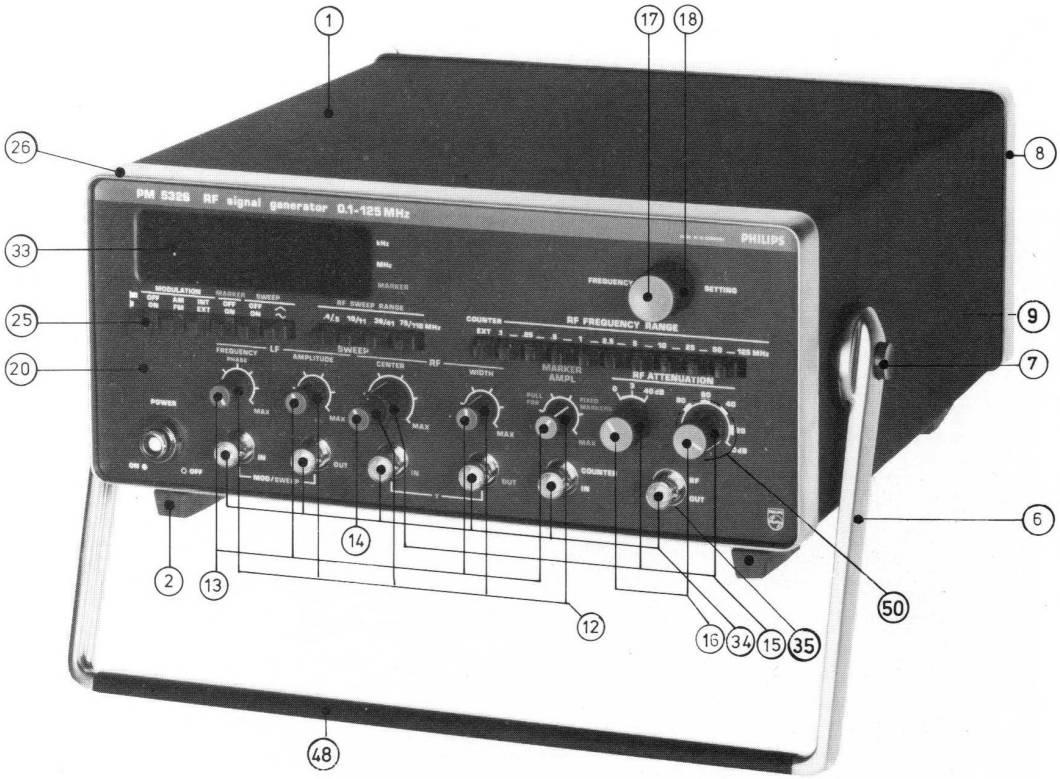

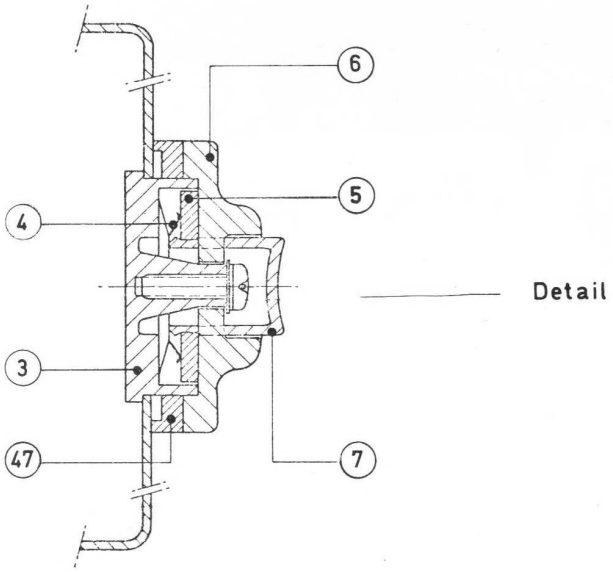

Fig. 8 Front view, mechanical parts

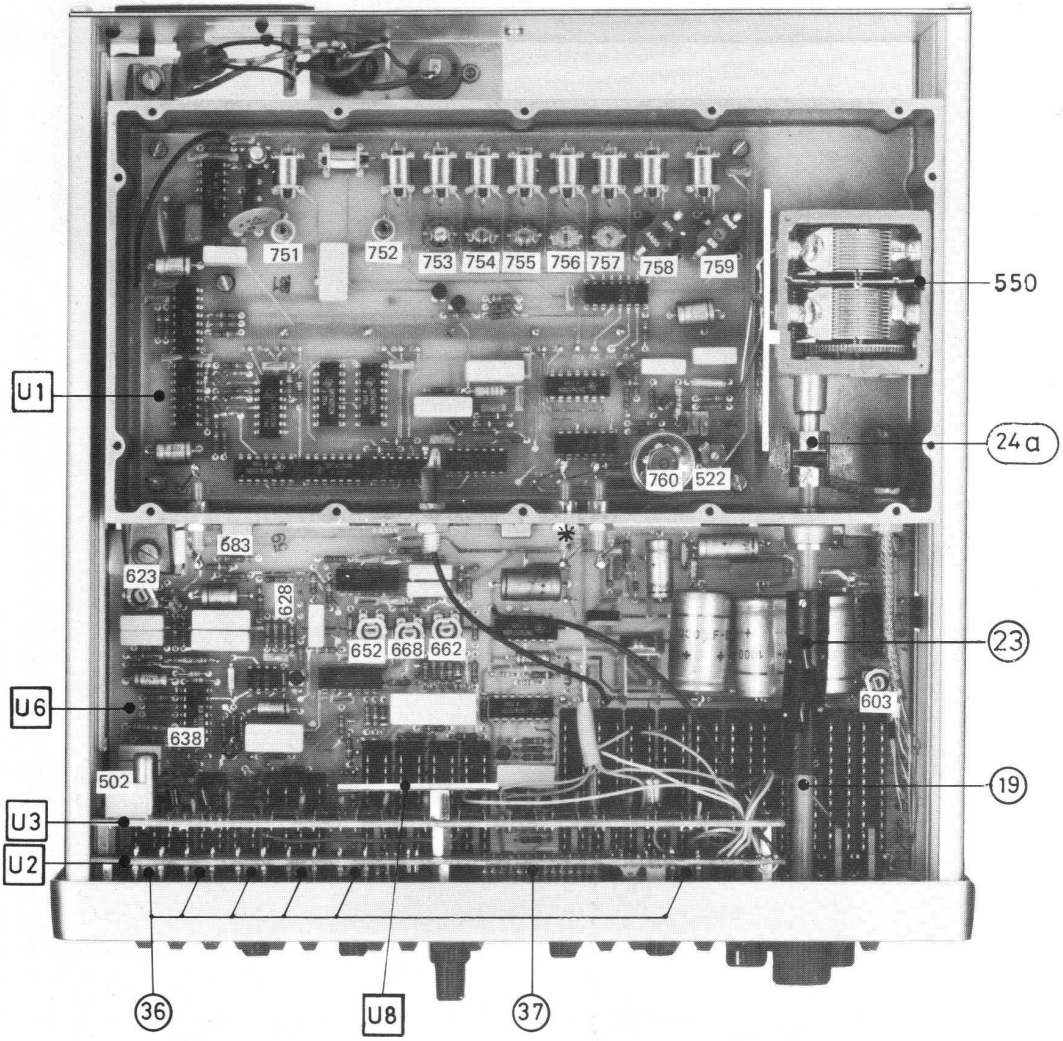

* omitted from
LO 031600 onward

Fig. 9 top view

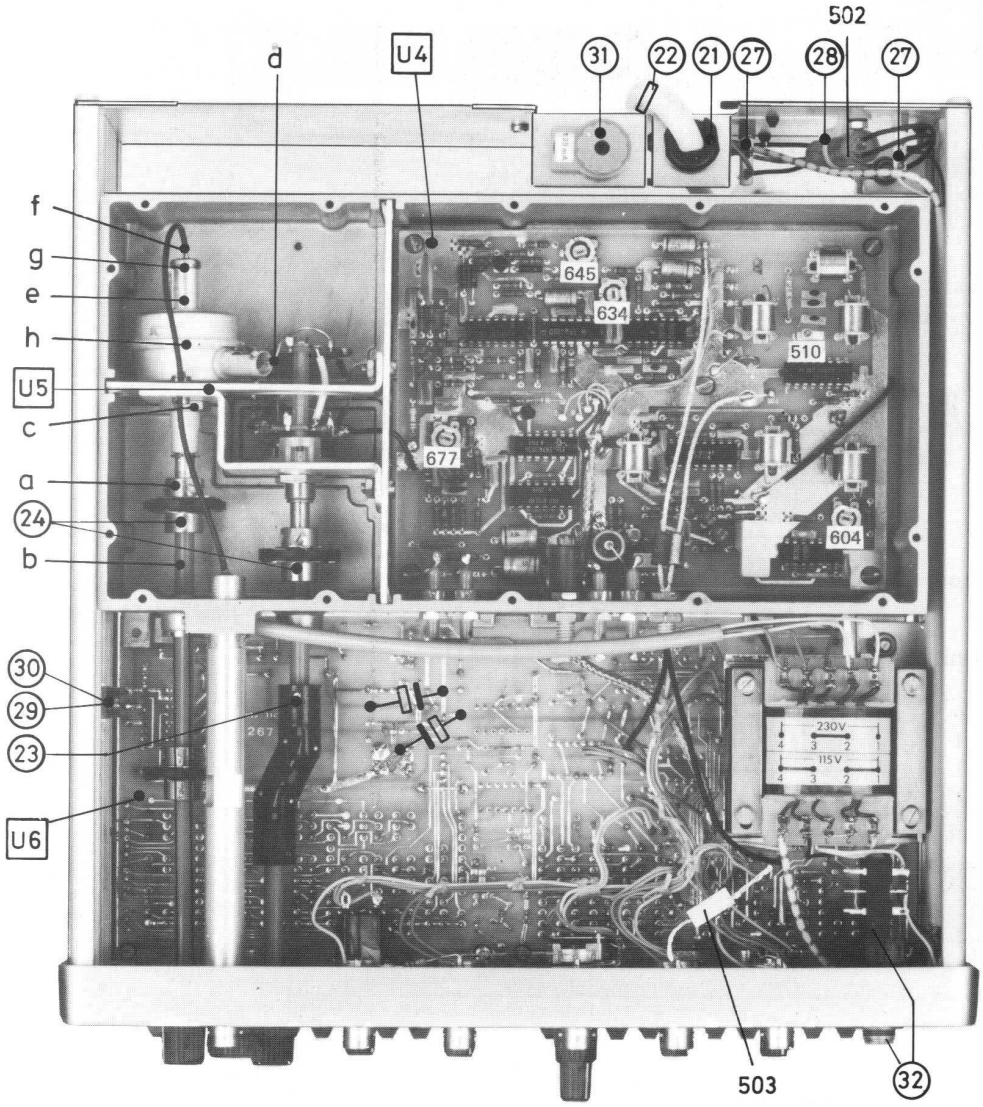

Fig. 10 bottom view

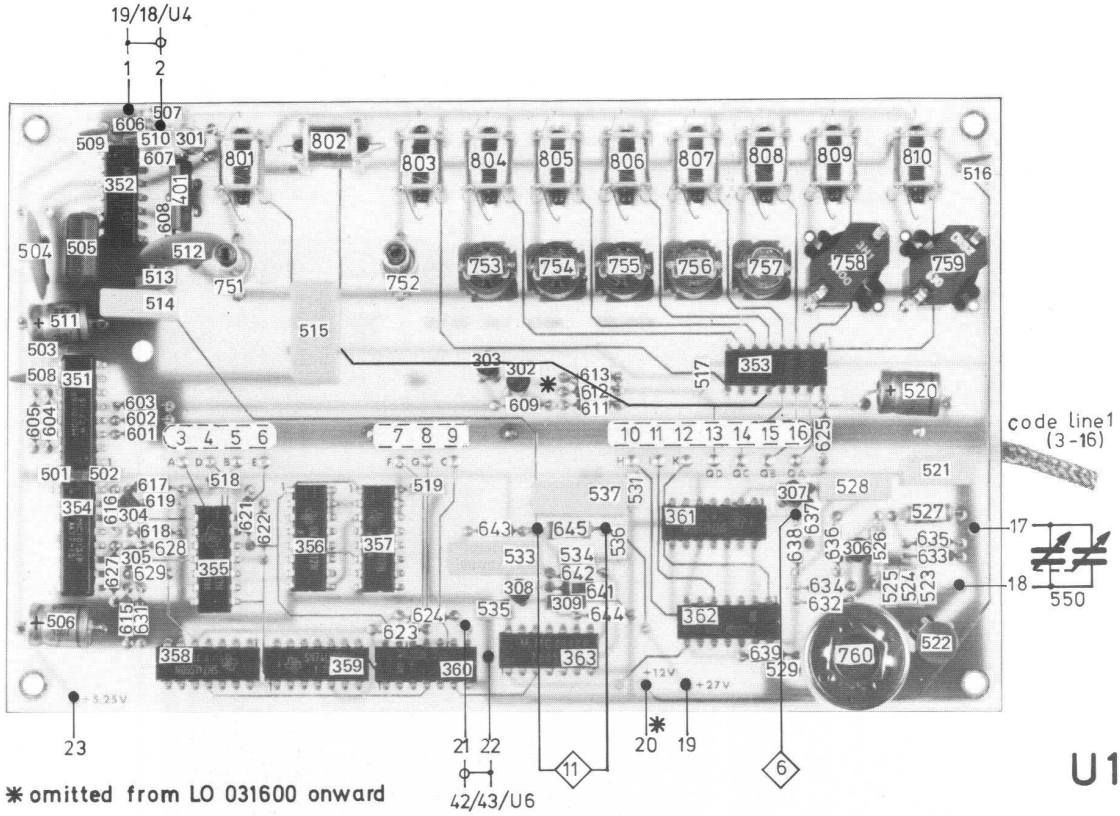

✱ omitted from LO 031600 onward

Fig. 11 Unit 1

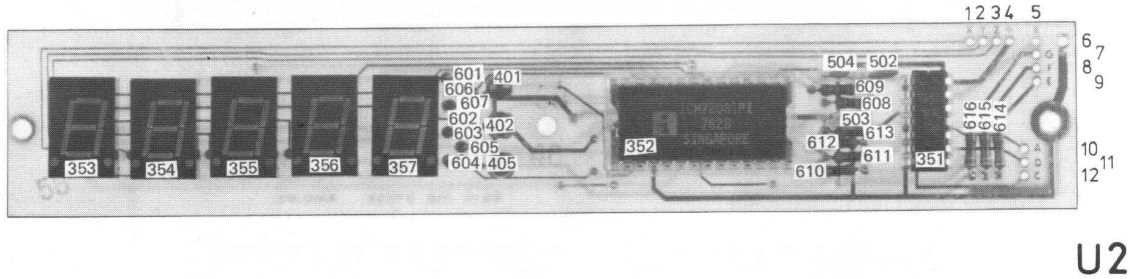

Fig. 15 Unit 2

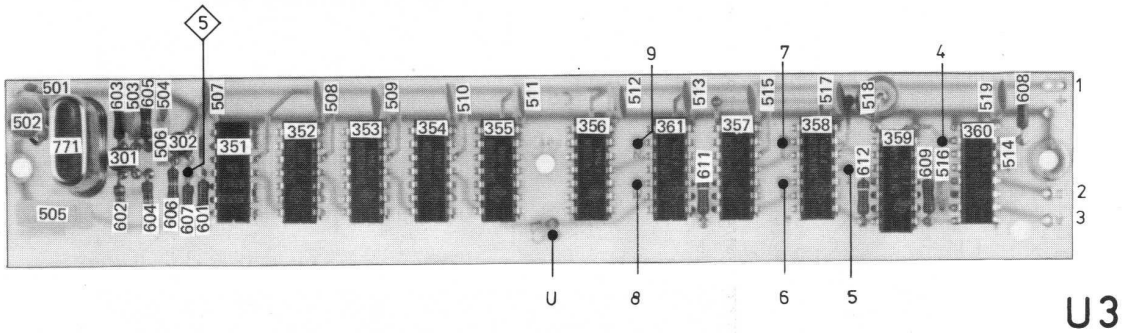

Fig. 14 Unit 3

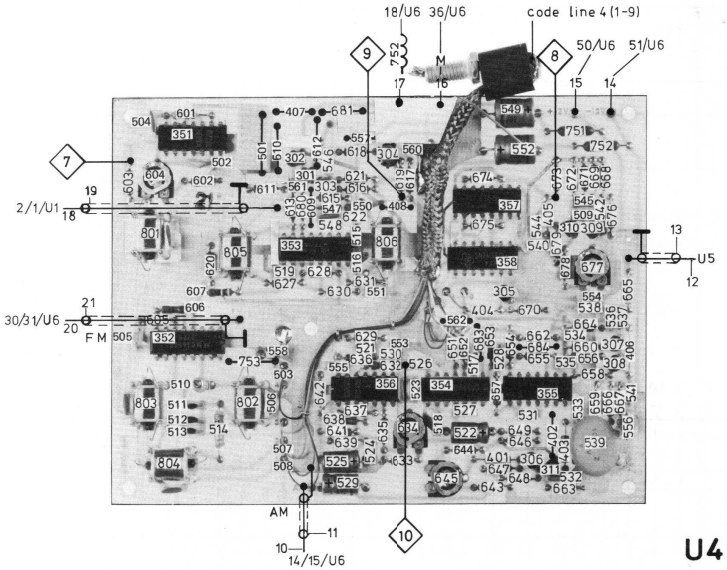

Fig. 12 Unit 4

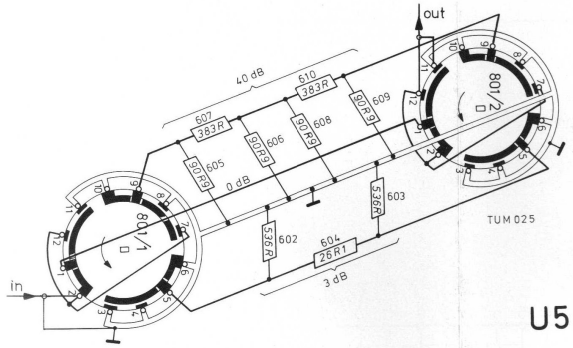

Fig. 16 Unit 5

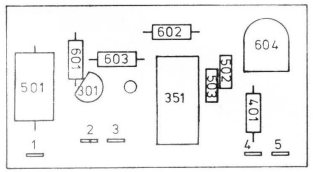

Fig. 20 Unit 8

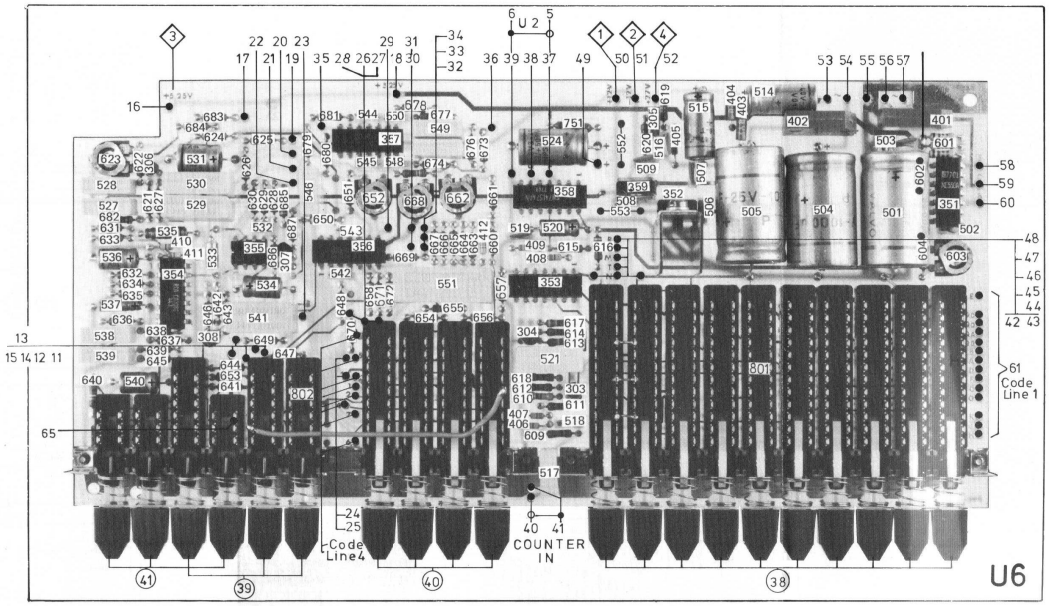

Fig. 13a Unit 6

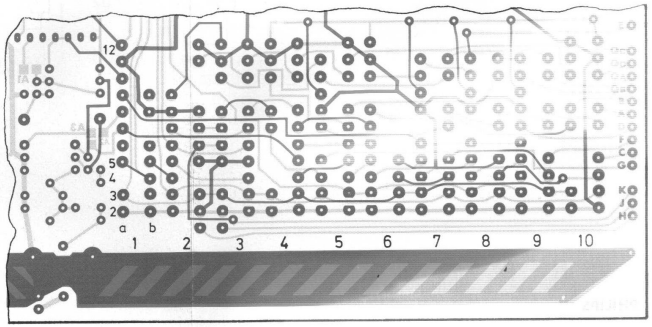

Fig. 13b Unit 6, switch 801; coded wiring for RF frequency ranges, prescaler, divider, time base, display

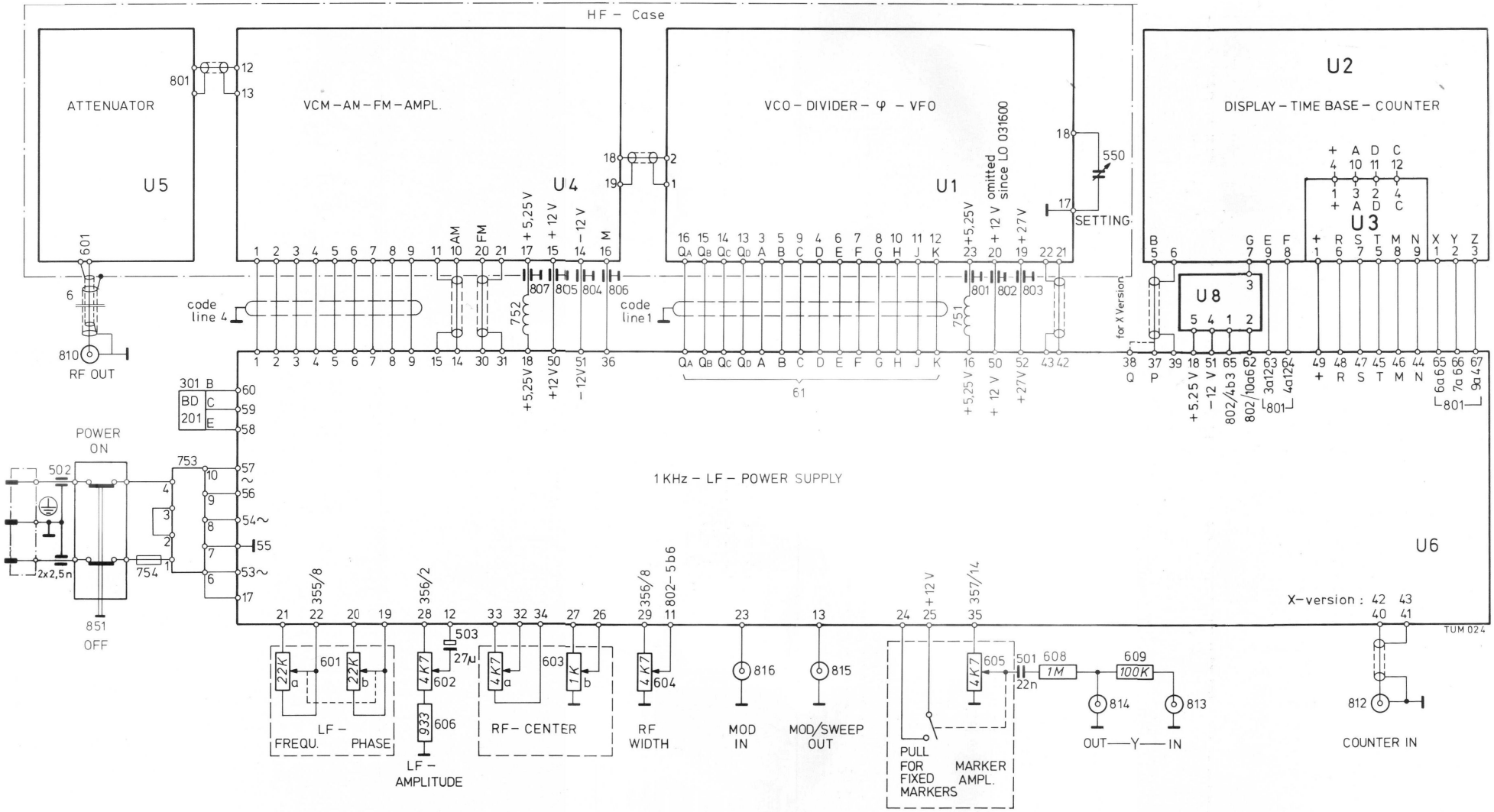

Fig. 17 Overall circuit diagram

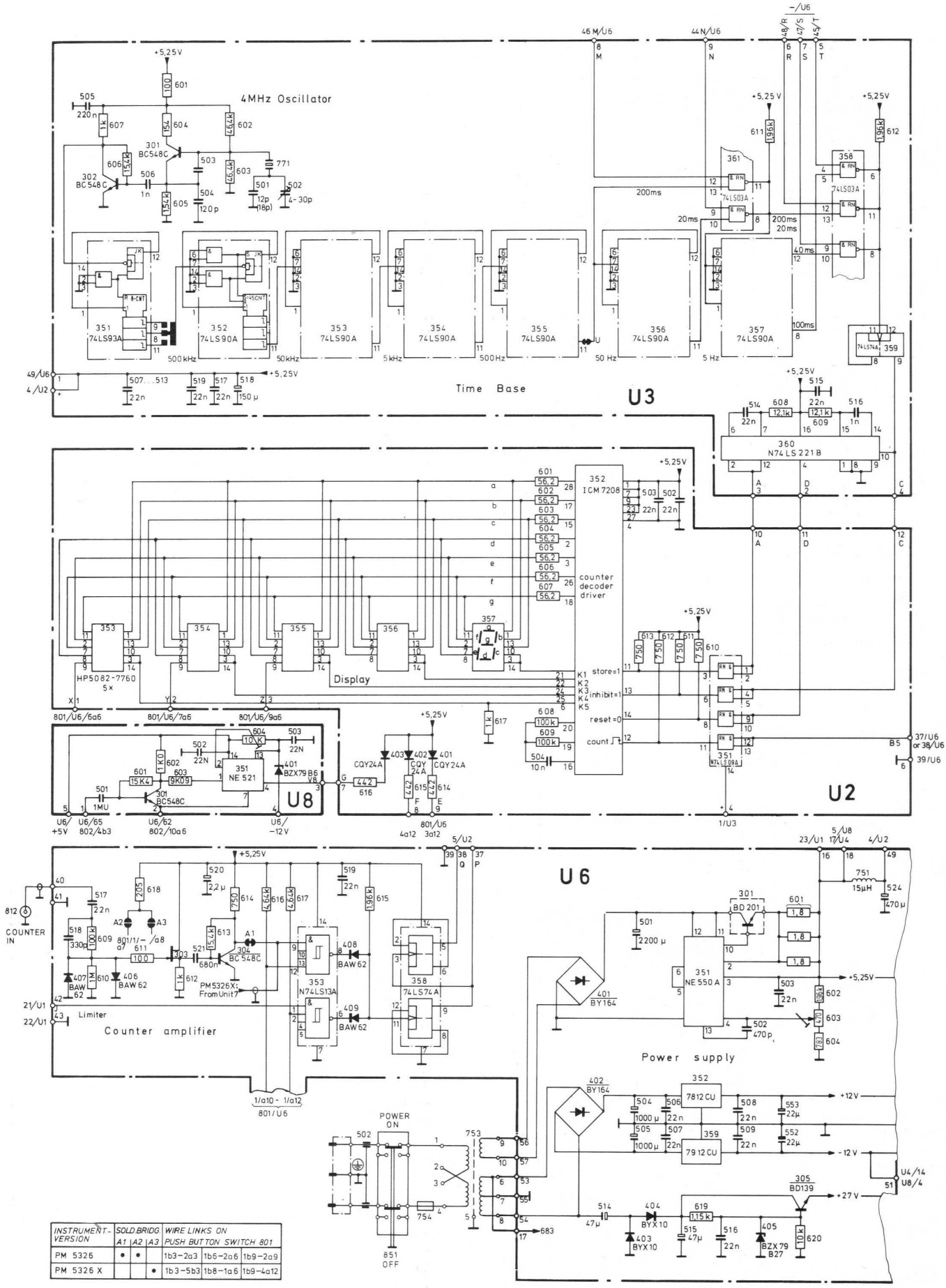

INSTRUMENT-VERSION	SOLD.BRIDG A1	A2	A3	WIRE LINKS ON PUSH BUTTON SWITCH 801		
PM 5326	•	•		1b3–2a3	1b6–2a6	1b9–2a9
PM 5326 X			•	1b3–5b3	1b8–1a6	1b9–4a12

Fig.18 Circuit diagram units 2,3,8 and parts of unit b

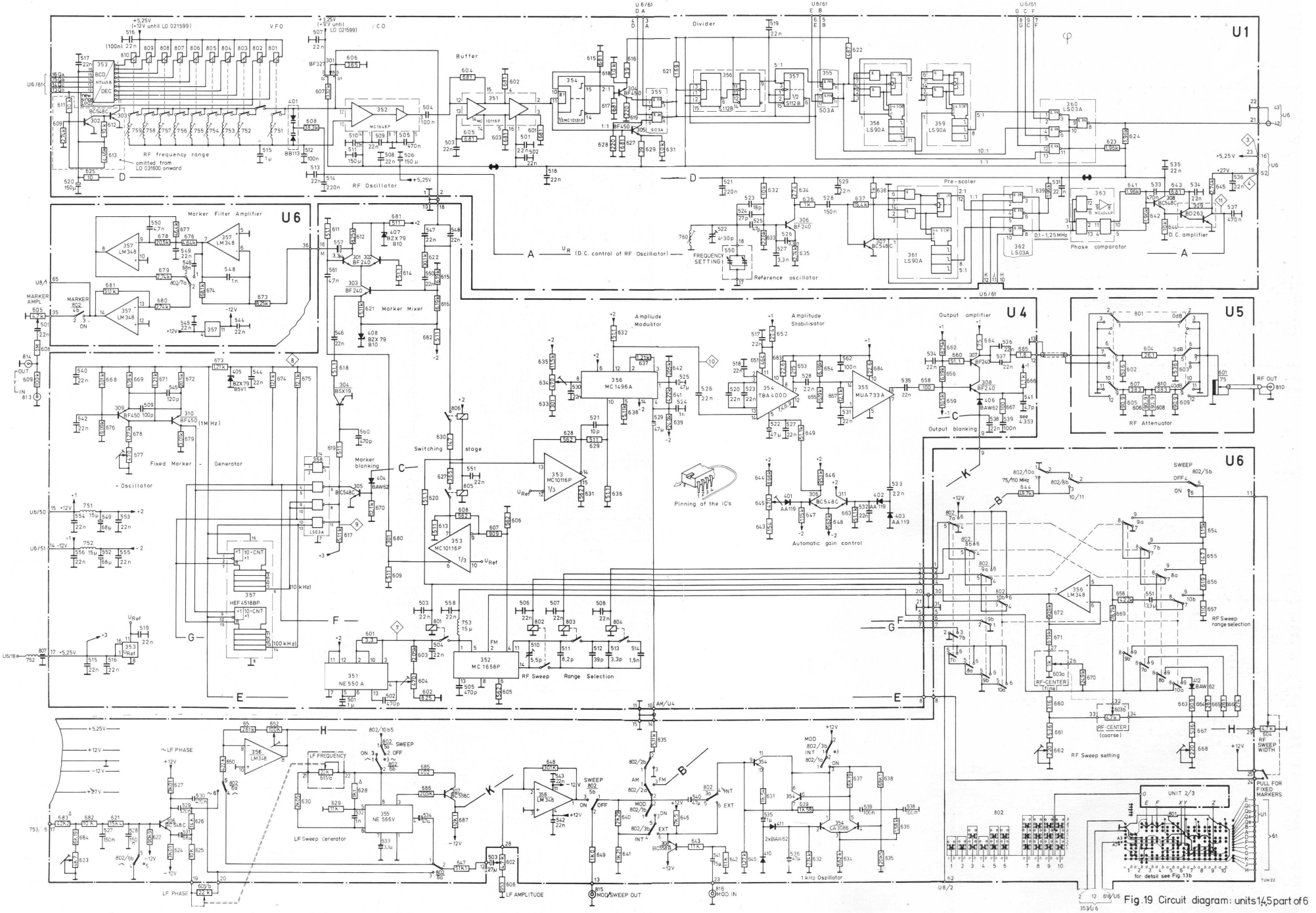

Fig.19 Circuit diagram: units 1,4,5 part of 6

CODING SYSTEM OF FAILURE REPORTING FOR QUALITY ASSESSMENT OF T & M INSTRUMENTS

(excl. potentiometric recorders)

The information contents of the coded failure description is necessary for our computerized processing of quality data.

Since the reporting of repair and maintenance routines must be complete and exact, we give you an example of a correctly filled-out PHILIPS SERVICE Job sheet.

① *Country*	② *Day Month Year*	③ *Typenumber*	*/Version*	④ *Factory/Serial no.*
3 2	1 5 0 4 7 5	0 P M 3 2 6 0	0 2	D O 0 0 7 8 3

CODED FAILURE DESCRIPTION ⑥

⑤ *Nature of call*	*Location*	*Component/sequence no.*	*Category*
☐ Installation		T S 0 6 0 7	5
☐ Pre sale repair		R 0 0 6 3 1	2
☐ Preventive maintenance	0 0 2 1	9 9 0 0 0 1	4
☒ Corrective maintenance			
☐ Other			

⑦ *Job completed* ☒

Working time ⑧ ☐ ☐ 1 2 Hrs

Detailed description of the information to be entered in the various boxes:

①Country: 3 2 = Switzerland

②Day Month Year 1 5 0 4 7 5 = 15 April 1975

③Type number/Version O P M 3 2 6 0 0 2 = Oscilloscope PM 3260, version 02 (in later oscilloscopes this number is placed in front of the serial no)

④Factory/Serial number D O 0 0 7 8 3 = DO 783 These data are mentioned on the type plate of the instrument

⑤ Nature of call: Enter a cross in the relevant box

⑥ Coded failure description

Location

These four boxes are used to isolate the problem area. Write the code of the part in which the fault occurs, e.g. unit no or mechanical item no of this part (refer to 'PARTS LISTS' in the manual).

Example: 0001 for Unit 1
000A for Unit A
0075 for item 75

If units are not numbered, do not fill in the four boxes; see Example Job sheet.

Component/sequence no.

These six boxes are intended to pinpoint the faulty component.

A. Enter the component designation as used in the circuit diagram. If the designation is alfa-numeric, the letters must be written (starting from the left) in the two left-hand boxes and the figures must be written (in such a way that the last digit occupies the right-most box) in the four right-hand boxes.

B. Parts not identified in the circuit diagram:

990000 Unknown/Not applicable
990001 Cabinet or rack (text plate, emblem, grip, rail, graticule, etc.)
990002 Knob (incl. dial knob, cap, etc.)
990003 Probe (only if attached to instrument)
990004 Leads and associated plugs
990005 Holder (valve, transistor, fuse, board, etc.)
990006 Complete unit (p.w. board, h.t. unit, etc.)
990007 Accessory (only those without type number)
990008 Documentation (manual, supplement, etc.)
990009 Foreign object
990099 Miscellaneous

Category

0 Unknown, not applicable (fault not present, intermittent or disappeared)
1 Software error
2 Readjustment
3 Electrical repair (wiring, solder joint, etc.)
4 Mechanical repair (polishing, filing, remachining, etc.)
5 Replacement (of transistor, resistor, etc.)
6 Cleaning and/or lubrication
7 Operator error
8 Missing items (on pre-sale test)
9 Environmental requirements are not met

⑦ Job completed: Enter a cross when the job has been completed.

⑧ Working time: Enter the total number of working hours spent in connection with the job (excluding travelling, waiting time, etc.), using the last box for tenths of hours.

☐ ☐ 1 2 = 1,2 working hours (1 h 12 min.)

Sales and service all over the world

Alger: Sadetel; 41 Rue des Frères Mouloud, Alger; tel. 656613–656607

Argentina: Philips Argentina S.A., Cassila Correo 3479, Buenos Aires; tel. 70.7741 al 7749

Australia: Philips Scientific & Industrial Equipment Division, Centre Court, 25 - 27 Paul Street, P.O. Box 119, North Ryde/NSW 2113; tel. 88 88222

Bangla Desh: Philips Bangla Desh Ltd. P.O. Box 62; Ramna,Dacca, tel. 28332

België/Belgique: S.A. M.B.L.E., Philips Scientific and Industrial Equipment Division; 80 Rue des Deux Gares, 1070 Bruxelles; tel. 2/513.76.00/523.00.00

Bolivia: Industrias Bolivianas Philips S.A. Cajón Postal 2964, La Paz; tel.: 50029/55270/55604

Brasil: S.A. Philips Do Brasil; Avenida 9 de Julho 5229; Caixa Postal 8681; CEP 01407 - São Paulo (S.P.); tel. 282-5722/282-1611

Burundi: Philips S.A.R.L., Avenue de Grèce, B.P. 900, Bujumbura

Canada: Philips Test and Measuring Instruments Inc.; 6 Leswyn Road, Toronto (Ontario) M6A-IK2; tel. (416) 789-7188

Chile: Philips Chiléna S.A., Casilla 2687, Santiago de Chile; tel. 394001/770038

Colombia: Industrias Philips de Columbia S.A., Calle 13 no. 51–03, Apartado Aereo 4282, Bogota; tel. 611877

Costa Rica: Philips de Costa Rica Ltd., Apartado Postal 4325, San José; tel. 210111

Danmark: Philips Elektronik Systemer A/S, Afd. for Industri og Forskning; Strandlodsvej 4, P.O. Box 1919, 2300 København S; tel. 01-57-2222; telex 27045

Deutschland (Bundesrepublik): Philips GmbH, Unternehmensbereich Elektronik für Wissenschaft und Industrie, Postfach 310 320; 35 Kassel-Bettenhausen, Miramstrasse 87; tel. 561-5011

Ecuador: Philips Ecuador S.A., Casilla 343, Quito; tel. 239080

Egypt: Ph. Scientific Bureau, 5 Sherif Str., Cairo – A.R. Egypt, P.O. Box 1687; tel. 78457-57739-914293

Eire: Philips Electrical (Ireland) Ltd., Newstead, Clonskeagh, Dublin 14; tel. 693355

El Salvador: Philips de El Salvador S.A., Apartado Postal 865, San Salvador; tel. 21-7441

España: Philips Ibérica S.A.E., Dpto Aparatos de Medida, Martinez Villergas 2, Apartado 2065, Madrid 27; tel. 404–2200/3200/4200

Ethiopia: Philips Ethiopia (Priv. Ltd. Co.), P.O.B. 2565; Ras Abebe Areguay Avenue, Addis Ababa; tel. 13440

Finland: See Suomi

France: S.A. Philips Division S&I, Division de la S.A. Philips Industrielle et Commerciale, 105 Rue de Paris, 93 002 Bobigny; tel. 830-11-11

Ghana: Philips (Ghana) Ltd., P.O.B. M 14, Accra; tel. 66019

Great Britain: Pye Unicam Ltd, York Street, Cambridge CBI-2PX; tel. (0223) 58866
Service Centre:
Pye Unicam Ltd., Beddington Lane, Croydon, Surrey CR9-4EN; tel. 01-684-3670

Greece: See Hellas

Guatemala: Philips de Guatemala S.A., Apartado Postal 238, Ciudad de Guatemala, Zona 9; tel. 64857

Hellas: Philips S.A. Hellénique, 54 Avenue Syngrou, Athens 403; P.O. Box 153, tel. 9215311

Hong Kong: Philips Hong Kong Ltd., P.O.B. 2108, St. George's Building, 21st floor, Hong Kong city; tel. 5–249246

India: Philips India Ltd., Shivsagar Estate, Block "A", Dr. Annie Besant Road, P.O.B. 6598, Worli, Bombay 18; tel. 370071/391431

Indonesia: P.T. Philips Development Corporation Jalan Proklamasi 33, P.O.B. 2287, Jakarta; tel. 51985/51986/81876

Iran: Philips Iran Ltd., P.O.B. 1297, Teheran; tel. 662281-5

Iraq: Philips Iraq W.L.L., Munir Abbas Building, 4th floor; South Gate, P.O. box 5749, Baghdad; tel. 80409/98844

Island: Heimilisteaki SF, Saetún 8, Reykjavik; tel. 24000

Islas Canarias: Philips Ibérica S.A.E., Triana 132, Las Palmas; Casilla 39-41, Santa Cruz de Tenerife

Italia: Philips S.p.A., Sezione S&I; Viale Elvezia 2, 20052 Monza; tel. 36351, telex Mi 35290

Japan: See Nippon

Kenya: Philips (Kenya) Ltd., P.O.B. 30554, Nairobi; tel. 29981

Kuwait: Delegate Office of Philips Industries, P.O.Box 3801; Kuwait, tel. 33814

Malaysia: Philips Malaya Sdn Bhd., P.O. Box 2163, Petaling Jaya, Kuala Lumpur; Selangor, W. Malaya; tel. 774411

México: Philips Mexicana S.A. de C.V., Calle Durango 167, Div. Cientifico Industrial, Apartado Postal 24–328 Mexico 7 (D.F.); tel. 525 15 40

Morocco: Samtel, 2 Rue de Bapaume, Casablanca; tel. 243050-243052

Nederland: Philips Nederland B.V., Hoofdgroep PPS, Boschdijk 525, Gebouw VB, Eindhoven; tel. 793333

Ned. Antillen: Philips Antillana N.V., Postbus 523, Willemstad; Curaçao; tel. 37575–35464

New Zealand: Philips Electrical Industries of N.Z. Ltd., Scientific and Industrial Equipment Division Wakefield Street 181-195, P.O.B. 2097, Wellington; tel. 859–859

Nigeria: Philips (Nigeria) Ltd., 6 Ijora Causeway, P.O.B. 1921, Lagos; tel. 45414/7

Nippon: Nihon Philips Corporation, Shuwa Shinagawa Building, 26–33 Takanawa 3 – Chome, Minato-Ku, Tokyo 108; P.O. Box 13; tel. (03) 448–5574

Norge: Norsk A.S. Philips , Industri og Forsking, Essendrops gate 5, Postboks 5040, Oslo 3; tel. 463890

Österreich: Oesterreichische Philips Industrie GmbH, Abteilung Industrie Elektronik, Breitenfurterstrasse 219, A-1230 Wien; tel. (222)-831501/05

Pakistan: Philips Electrical Co. of Pakistan Ltd., El-Markaz, M.A. Jinnah Road, P.O.B. 7101, Karachi 3; tel. 70071

Paraguay: Philips del Paraguay S.A., Casilla de Correo 605, Asunción; tel. 48045-46919

Perù: Philips Peruana S.A., Apartado Aereo 1841, Lima 5; tel. 326070

Philippines: Philips Industrial Development Inc., 2246 Pasong Tamo, P.O.B. 911, Makati Rizal D-708; tel. 889453 to 889456; 868951

Portugal: Philips Portuguesa S.A.R.L., Av. Eng.º Duarte Pacheco 6, Apartado 1331, Lisboa 1; tel. 683121/9

Rwanda: Philips Rwanda S.A.R.L. B.P. 449, Kigali.

Saoudi Arabia: A. Rajab and A. Silsilah, P.O. Box 203, Jeddah - Saudi Arabia; tel. 27392/5

Schweiz-Suisse-Svizzera: Philips A.G., Binzstrasse 15, Postfach 307, Ch 8027 Zürich; tel. 442211

Singapore: Philips Singapore Private Ltd., P.O. Box 340, Toa Payoh Central Post Office; Singapore 12; tel. 538811

South Afrika: South African Philips (Pty) Ltd., P.O.B. 7703, 2 Herb Street, New Doornfontein, Johannesburg 2000; tel. 240531

South-Korea: Philips Electronics (Korea) Ltd., P.O. Box 3680, Seoul; tel. 737222

Suomi: Oy Philips Ab., Kaivokatu 8, P.O. Box 10255, 00101 Helsinki 10; tel. 17271

Sverige: Svenska A.B. Philips, Philips Industrielektronik, Lidingövägen 50, Fack, S10250 Stockholm; tel. 635000

Syria: Philips Moyen-Orient S.A., Rue Fardoss 79, Immeuble Kassas and Sadate, B.P. 2442, Damas; tel. 18605–21650

Taiwan: Philips Taiwan Ltd., San Min Building, P.O. Box 22978, Taipei

Tanzania: Philips (Tanzania) Ltd., Box 20104, Dar es Salaam; tel. 29571

Thailand: Philips Electrical Co. of Thailand Ltd., 283 Silom Road, P.O. Box 961, Bangkok; tel. 233-6330

Tunisia: S.T.I.E.T., 32815, Rue Ben Ghedhahem, Tunis; tel. 244268

Türkiye: Türk Philips Ticaret A.S., Posta Kutusa 504, Beyoglu, Gümüssüyü Caddesi 78/80, Istanbul 1; tel. 435910

Uganda: Philips Uganda Ltd., P.O. Box 5300, Kampala; tel. 59039

Uruguay: Industrias Philips del Uruguay S.A., Avda Uruguay 1287, Casilla de Correo 294, Montevideo; tel. 915641/44

U.S.A.: Philips Test and Measuring Instruments Inc., 85, Mc Kee Drive, Mahwah, New Jersey 07430, tel. (201) 529–3800

Venezuela: Industrias Venezolanas Philips S.A., Apartado Aereo 1167, Caracas 107; tel. 360511/363011/362255

Zaire: Philips S.Z.R.L., B.P. 1798, Kinshasa; tel. 31887-31888-31693-31208

Zambia: Philips Electrical Ltd., Professional Equipment Division, P.O.B. 553; Kitwe; tel. 2526/7/8

T&M/780501

For information on change of address:
N.V. Philips'Gloeilampenfabrieken
Test and Measuring Instruments Dept.
Eindhoven - The Netherlands

For countries not listed:
N.V. Philips S&I Export Dept.
Test and Measuring Instruments Dept.
Eindhoven - The Netherlands