SERVICE MANUAL

A-5500/A-5300

STEREO TAPE DECK

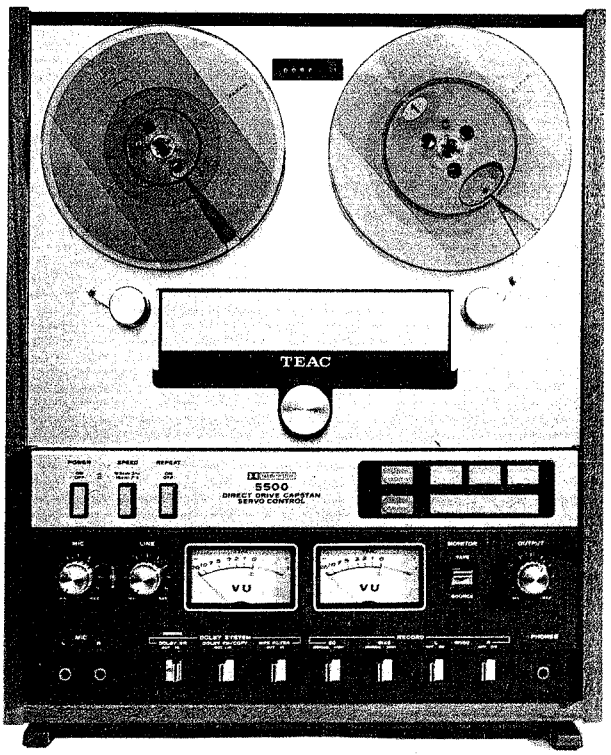

TEAC®

TOKYO, JAPAN

NOTE

This Service Manual was written for both the A-5300 and the A-5500 Stereo Tape Decks because of their strong similarity and common transport unit. The Amplifier unit, however, is greatly dis-similar. Therefore, two separate Electrical Adjustment Sections are included in this Manual, one for the A-5300 only and another for the A-5500 only. Please distinguish between them for the type of deck being serviced.

When placing an order for parts, please refer to the PARTS LIST and PRICE LIST FOR PARTS which are printed separately from this manual.

1. File the PARTS LIST manual together with this SERVICE MANUAL; further MANUAL CHANGE SHEETS should also be kept with these.
2. Use the PARTS LIST manual and the PRICE LIST FOR PARTS when ordering replacement parts from TEAC Corp.

*"Dolby", "Dolbylized and the Double-D " DD " are trade marks of Dolby Laboratories, Inc.

1. GENERAL DESCRIPTION

TEAC's A-5300/5500 are high quality stereo tape decks, representing a New Generation in the design and construction of recording equipment. With DC reel motors and a Direct-Drive Servo-controlled DC Motor-Capstan, all controlled by Integrated Circuit (IC) Logic Circuitry, these decks provide highly reliable operation at greatly reduced noise and heat levels. With almost all relays replaced by Logic Circuits, transport control is quick and positive, governed by 6 calculator-like buttons on the control center. Both models have advanced electronics and the 5500 includes built-in Dolby * "B" Noise Reduction circuitry.

If adjustments or repair procedures are not sufficiently clear or seem too difficult to accomplish, and for more detailed technical information, please contact your nearest TEAC distributor, a TEAC-affiliated subsidiary Corporation or the TEAC Corporation. TEAC addresses are given on the last leaf of this manual.

INDEX

1. GENERAL DESCRIPTION 1
2. SPECIFICATIONS 2, 3
3. TOOLS FOR TESTING AND MAINTENANCE 4
4. TEAC TEST TAPE -YTT SERIES- 5
5. TAPE TRANSPORT PARTS LOCATION 6
6. PARTIAL DISASSEMBLY 7
7. SERVICING AND MAINTENANCE 11
8. HEAD ALIGNMENT 12
9. MEASUREMENT AND ADJ. -MECHANICAL- 14
10. ELECTRICAL ADJUSTMENT LOCATIONS FOR A-5500 20
11. MEASUREMENT AND ADJ. -ELECTRICAL- 22
12. ELECTRICAL MEASUREMENT AND ADJ. FOR A-5300 33
    ADJUSTMENT LOCATIONS 34
13. TROUBLESHOOTING 41, 42, 43
14. INTERFACE CIRCUITS 44
15. TIMING SEQUENCE CHART 46
16. LIST OF LINE VOLTAGE AND CYCLE (Hz) AROUND THE WORLD 48
17. TEAC DECIBEL TABLE CHART 49
18. LEVEL DIAGRAMS 50,51
19. PACKING FOR SHIPMENT 52

2-1. SPECIFICATIONS

ELECTRICAL

FREQUENCY RESPONSE:	Overall from recording INPUT to playback OUTPUT 7-1/2ips ··· 40 Hz∿24 kHz ±3 dB 3-3/4ips ··· 40 Hz∿16 kHz ±3 dB (Measured at 20 dB below the Specified Level)
INPUT IMPEDANCE:	a) MIC: 10kΩ (600Ω∿10kΩ) b) LINE: 50kΩ
OUTPUT LOAD IMPEDANCE:	a) LINE: approx. 0.3V/10kΩ b) HEADPHONE: 0.3mW/8Ω
EQUALIZATION:	7-1/2ips ·· NAB 50μsec. 3180μsec. 3-3/4ips ·· NAB 90μsec. 3180μsec.
INPUT LEVEL:	a) MIC: -60 dB ±1 dB (0.25mV) b) LINE: -8 dB min.-18 dB ±1 dB (97mV) c) DIN: -28 dB ±1 dB (550mV)
OUTPUT LEVEL:	a) OUTPUT: -8 dB max.-4 dB -2 dB for A-5300 b) HEADPHONE: -24 dB ±1 dB (4.9mV)
BIAS FREQUENCY:	100 kHz (±5 kHz; Push-pull oscillator)
CROSSTALK REJECTION:	35 dB or more, adjacent track at 125 kHz
CHANNEL SEPARATION:	45 dB or more, channel to channel at 1 kHz
ERASE EFFICIENCY:	68 dB or more

GENERAL NOTICE

* As a result of continuing changes and improvements during the production run, minor difference may be found between early and later machines.
  Refer to manual change sheet for information concerning modifications.
* Value of "dB" in the test refer to 0 dB = 0.775V, except where specified. If a Test Set or an AC VTVM calibrated to 0 dB = 1V is to be used, appropriate compensation should be made.

Refer to the TEAC DECIBEL TABLE on page 49 to obtain conversion of millivolts to dB should your meter not have a dB scale.

2-2. SPECIFICATIONS

MECHANICAL

TYPE:	a) 4 track 2 channel stereophonic b) 4 track 2 channel monophonic c) 4 track 1 channel monophonic
HEADS:	Erase head ×1, Record head ×1, Playback head ×2
REEL SIZE:	7" maximum NAB reel
TAPE SPEED:	7-1/2ips (19 cm/s), 3-3/4ips (9.5 cm/s)
MOTORS:	1 direct drive DC servo capstan motor 2 coreless rotor type DC reel motors
WOW AND FLUTTER:	0.08% at 7-1/2ips (W-RMS) 0.10% at 3-3/4ips (W-RMS) Wow and flutter measured according to weighted (W-RMS) NAB standard using TEAC YTT-2002/2003 flutter free tape. Above value is measured during playback.
FAST WINDING TIME:	Approx. 150 seconds or less with 1800 ft tape
OPERATING POSITION:	Horizontal or vertical
POWER REQUIREMENT:	DM: 100V ±2.5% 50/60 Hz EX: 100, 117, 220, 240V ±2.5% 50/60 Hz TCA: 117V ±2.5% 60 Hz * TCA models for TEAC CORPORATION OF AMERICA
POWER CONSUMPTION:	60W
WEIGHT:	20 kg (44 lbs) net 19.8 kg for A-5300

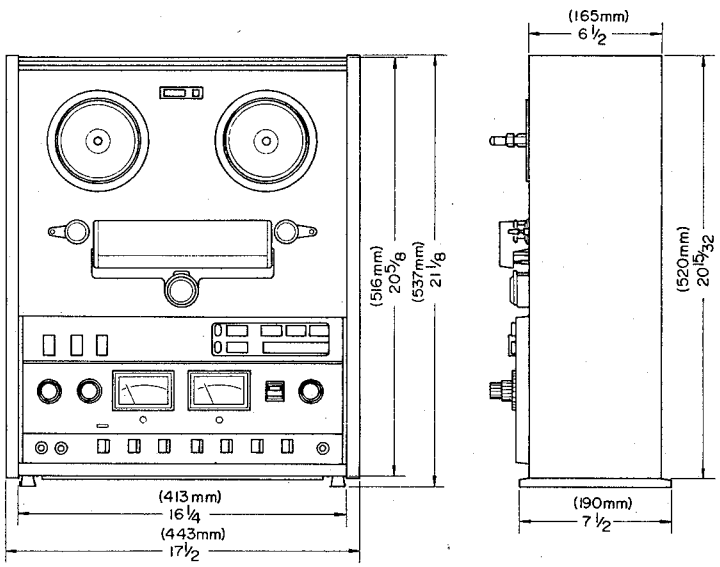

Fig. 2-1 Dimensions

3. TOOLS FOR TESTING AND MAINTENANCE

A minimum of the following tools and test instruments are required for measuring and adjusting to obtain optimum performance. Regular maintenance tools will be adequate for those not listed here. If any test instrument listed here is not available, a close equivalent can be used.

SPRING SCALE ·····	0∿4 kg (0∿8 lbs), 0∿300 g (0∿10 ozs)
FLUTTER METER ·····	Meguro Denpa Co., Model MK665B (preferred) or Sentinal Co., Model FL-3D-1
DIGITAL COUNTER ·····	Range - 0 Hz∿5 kHz
BANDPASS FILTER ·····	TEAC Model M-206A (1 kHz)
VTVM ·····	Hewlett-Packard Co., Model 4302B
OSCILLOSCOPE ·····	General purpose
BLANK TAPE ·····	TEAC YTT-8003 and Scotch 150, see page 21
TEAC TEST TAPE ·····	YTT-1002 (3-3/4ips), YTT-1003 (7-1/2ips) for Playback Alignment test YTT-2002 (3-3/4ips), YTT-2003 (7-1/2ips) for Tape Speed and Flutter test
EMPTY REEL ·····	TEAC RE-702 (2" hub) and RE-701 (4" hub)
TEAC TEST-Set* ·····	M-826A
TEAC PC Board Extender·····	Part Number 51670400

* Use of the TEAC M-826A Test Set is recommended. This set incorporates an AC VTVM, Audio Oscillator, Channel Selecting switch, Variable Attenuator, Monitor Speaker and Cables.

TEAC M-826A measures the RMS value of the Voltage (0 dB = 0.775V). Characteristics of this Test-Set are similar to the standard VU-meter.

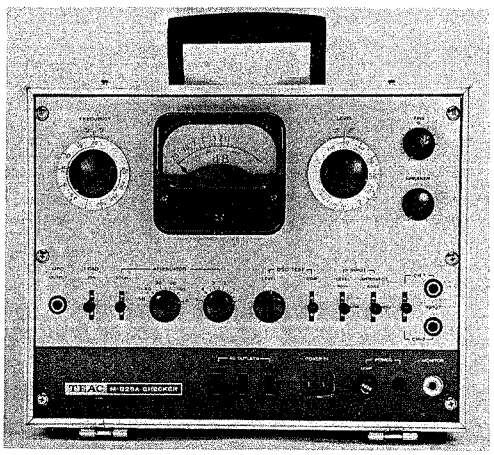

Fig. 3-1 TEAC Test Set

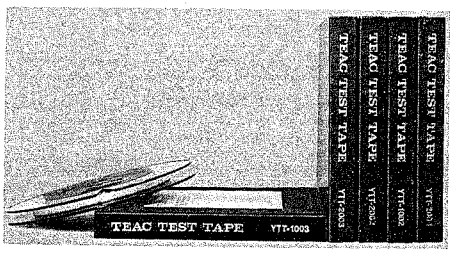

Fig. 3-2 TEAC Test Tape

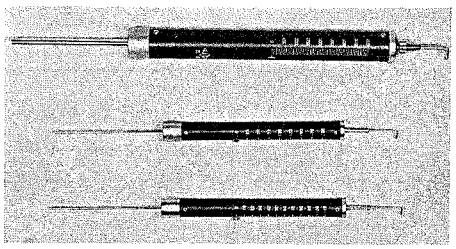

Fig. 3-3 Spring Scale

4. TEAC TEST TAPE -YTT SERIES-

-Playback only-

TEAC-YTT Series Test Tapes are designed for aligning and checking the playback system performance of any tape recorder. They have been manufactured to be within close tolerance to the NAB Standard, and the recorded signal format has been arranged for maximum convenience during test procedures.

YTT-1002/1003/1004 (FOR PLAYBACK ALIGNMENT)

TYPE			YTT-1002	YTT-1003	YTT-1004	REMARKS
TITLE			PLAYBACK ALIGNMENT			
TAPE	WIDTH		1/4 INCH			
	BASE		1 MIL	1 MIL	1-1/2 MIL	
TAPE SPEED(ips)			3-3/4	7-1/2	15	Accuracy: 0.2% Wow and Flutter: 0.1%(WRMS)
RECORD TRACK			FULL TRACK			
RECORDING CHARACTER-ISTICS	STANDARD		NAB			
	TIME CONSTANT (μs)		3180+90	3180+50	3180+50	
	TOLER-ANCE	WITHIN 0.5dB	50-5kHz	40-10kHz	30-15kHz	Azimuth Angle Tolerance: 90°±1.5′
		WITHIN 1 dB	7.5k-10kHz	12k-15kHz	20kHz	

	SECTION	FREQUENCY (Hz)			LEVEL	TIME	USE
		YTT-1002	YTT-1003	YTT-1004			
RECORDED SIGNAL	1	400	400	400	* 0dB	30s	Operating Reference Level Calibration
	2	7,500	15,000	15,000	-10dB	60s	Azimuth Alignment
	3	400	400	400		30s	Frequency Response Check
		10,000	15,000	20,000		15s each	
		7,500	12,000	15,000			
		5,000	10,000	12,000			
		2,500	7,500	10,000			
		1,000	5,000	7,500			
		750	2,500	5,000			
		500	1,000	2,500			
		250	750	1,000			
		100	500	750			
		50	250	500			
			100	250			
			50	100			
			40	50			
				40			
				30			

* 0dB recording level is 6dB below the 3% T.H.D. level

YTT-2002/2003/2004 (FOR TAPE SPEED AND WOW-FLUTTER TESTING)

TYPE		YTT-2002	YTT-2003	YTT-2004	REMARKS
TITLE		TAPE SPEED AND FLUTTER TSET			
TAPE	WIDTH	1/4 INCH			
	BASE	1 MIL	1 MIL	1-1/2 MIL	
TAPE SPEED(ips)		3-3/4	7-1/2	15	
WOW AND FLUTTER		0.07%	0.05%	0.03%	Weighted RMS
RECORDED WIDTH		FULL TRACK			
RECORDED SIGNAL	FREQUENCY	3,000Hz			
	LEVEL	-5dB			0dB: Operating Reference Level
	TIME	7 MINUTES			

Since these tapes will be your own reference standard, care should be exercised, in handling and storage, not to expose them to any magnetic flux which might deteriorate or completely destroy the recorded signals. High temperature and humidity are also harmful to the tape.

5. TAPE TRANSPORT PARTS LOCATION

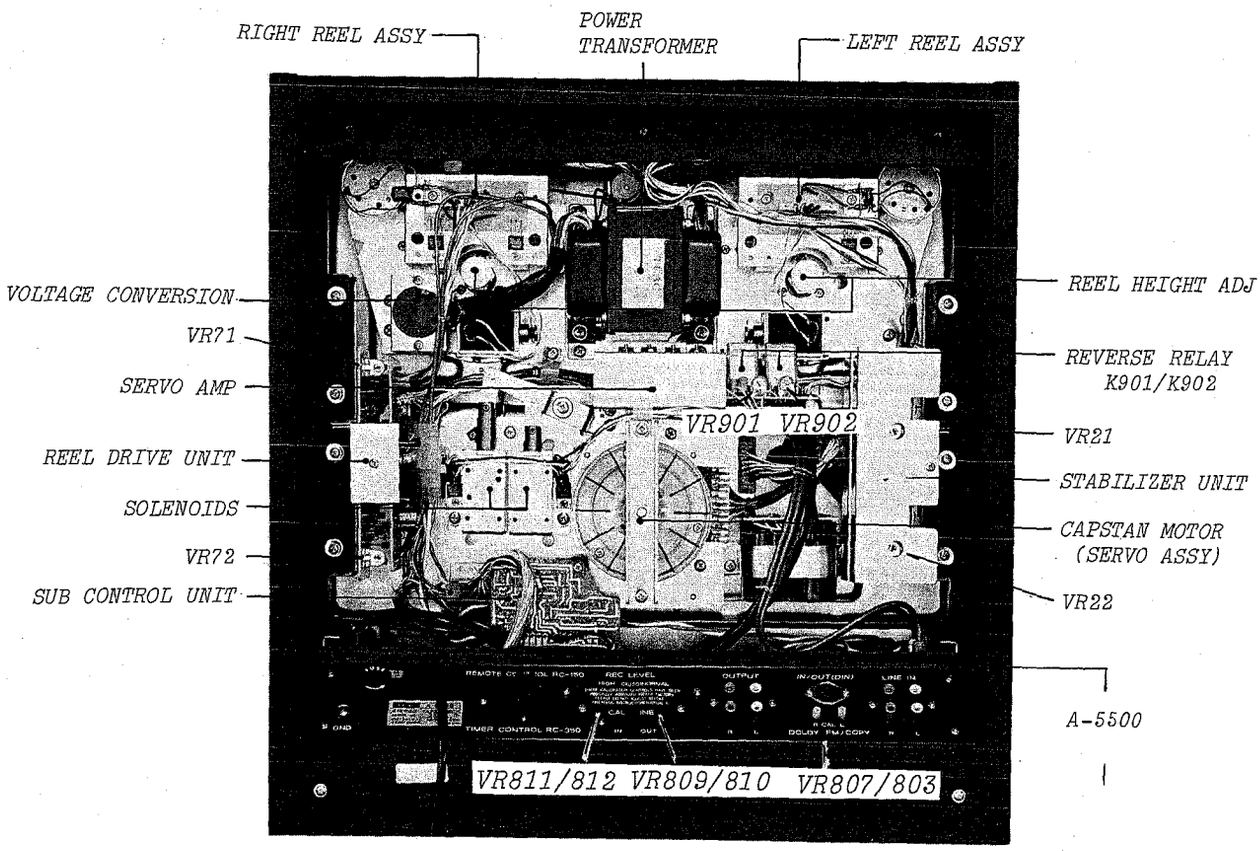

–REAR VIEW–

Fig. 5-1 Tape Transport Parts Locations

* For ordering parts, refer to the exploded view of the PARTS LIST. An accompanying listing provides the correct part numbers.

6. PARTIAL DISASSEMBLY

NOTE: Disassembly is made easy by extensive use at subassembly construction. Take care, however, to remember proper connections for re-assembling the deck.

CASE REMOVAL

1. Place face-down on a soft mat.
2. Remove the rear panel (6 screws).
3. Disconnect the cables interconnecting the Amplifier and Transport units.
4. Remove the 2 Amplifier mounting screws marked "A" and "B".
5. Remove the 8 Transport mounting bolts.
6. Lift the case off the two units.

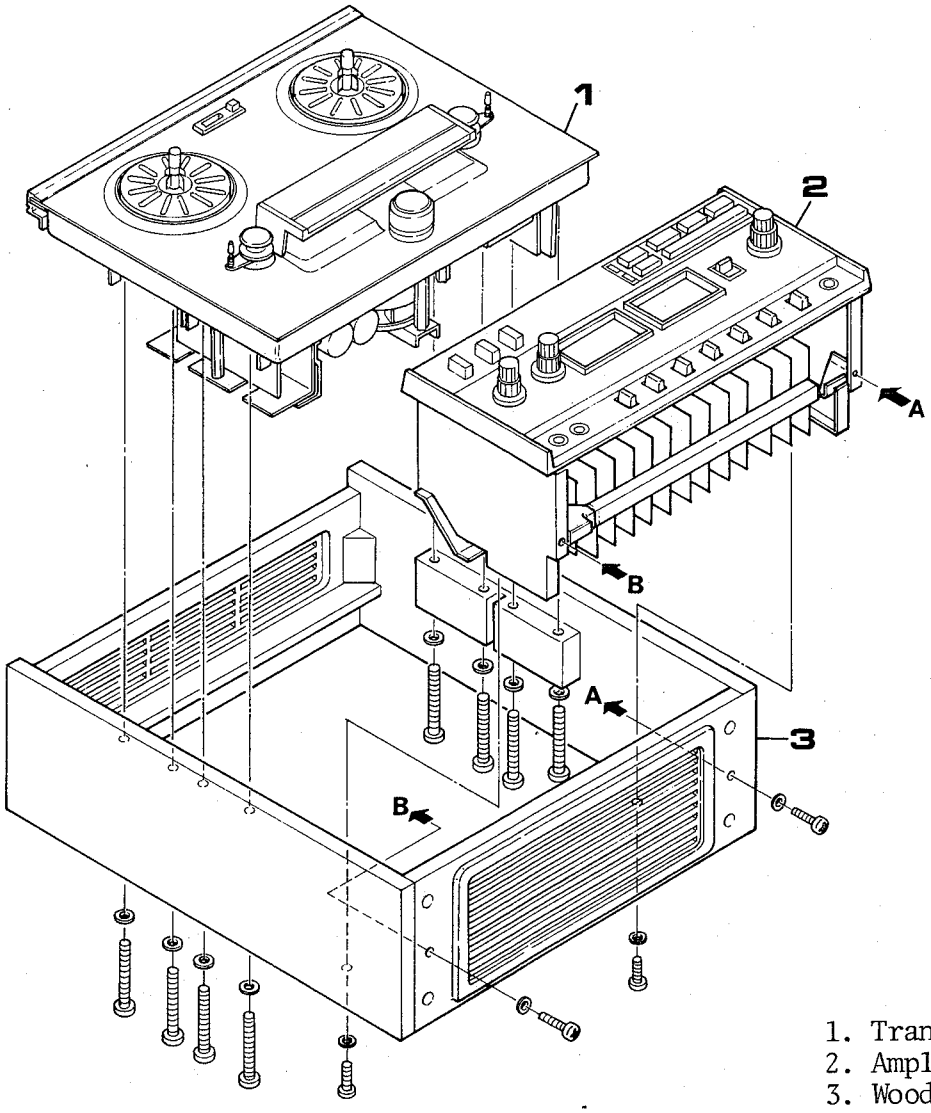

1. Transport
2. Amplifier
3. Wooden Case

Fig. 6-1 Case Removal

CAPSTAN MOTOR ASSEMBLY REMOVAL

1. Disconnect the following:
   a) Head wiring cables from Amplifier (1 cable, 2 pin-jack cords)
   b) 12P connector from CAPSTAN MOTOR ASSY.
   d) Sub Control PC Board. (1 X-head screw)
   d) Voltage Stabilizer unit (1 X-head screw)
2. Remove the Sub Control PC Board stand-off post.
3. Remove the Left hand screw on the capacitor PC Board, let that corner slip down.
4. Remove the Head Housing (2 Allen-head screws) and the Pinch Roller.
5. Remove the Head Assembly (6 screws), leaving wires fastened.
6. Remove the "O" ring grommet from the capstan motor shaft.
7. Hold the CAPSTAN MOTOR ASSY firmly while you remove the 3 remaining screws. Then carefully slide out the Assy while observing the capstan shaft.

   CAUTION: Do not bend the leaf switches by the capstan shaft.

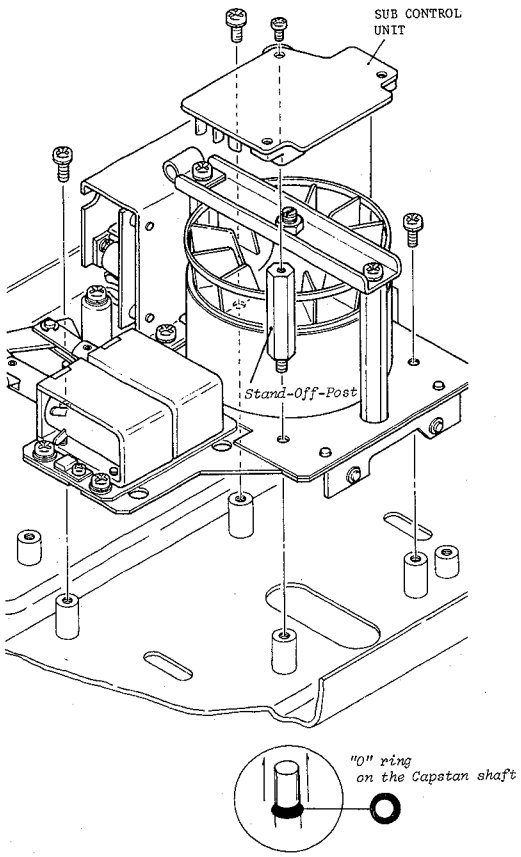

Fig. 6-2 Capstan Motor Assy Removal

CAPSTAN THRUSTPLATE CLEARANCE

1. Check that the capstan motor moves freely without binding on the Thrustplate.
2. Check that the clearance between the motor shaft tip and the Thrustplate is between 0.1 and 0.3 millimeter.
3. To adjust, first loosen the locking nut; then set with a common screwdriver for approx. 0.2mm clearance. Check by observing the capstan movement.
4. Tighten the Lock Nut and secure with locking paint.

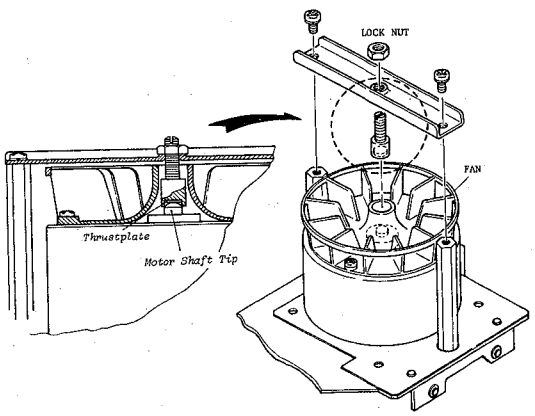

Fig. 6-3 Capstan Thrustplate Clearance

REEL DRIVE (L/R) ASSEMBLY REMOVAL

1. Remove Rear Panel by 6 screws.
2-a. Disconnect the Wire Socket (6P) on the PC Board.

   For Brake Solenoid Replacement NOTE: "O" ring spacer must be between the brake arms and the solenoid coil. Refer to Mark (A).

2-b. EX Model
   RIGHT Reel table only, remove the VOLTAGE CONVERSION panel (2 screws).
3. Remove the 3 mounting screws holding the Reel Drive Assy.
4. Gently slide Reel Drive Assy OUT from the Rear.

   NOTE

   RIGHT Reel Drive Assy includes 2 transistors, and the voltage conversion panel (EX only). Reel Drive Assemblies are mirror images of each other, these assemblies are not interchangeable.

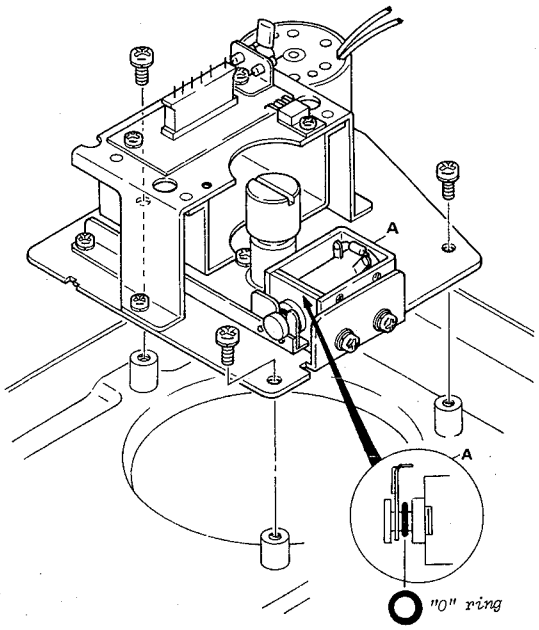

Fig. 6-4 Reel Drive Assy Removal

REEL TABLE REMOVAL

1. Remove the REEL DRIVE Assy from the deck (above).
2. Remove Reel Height Adj screw (large cap).
3. Release Brake Band by holding in the brake solenoid.
4. Remove 3 mounting screws holding Reel Table from Rear side.
5. Take care with the Drive Belt.

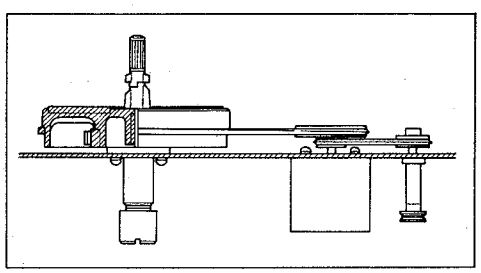

Refer to page 15 for REEL HEIGHT ADJ.

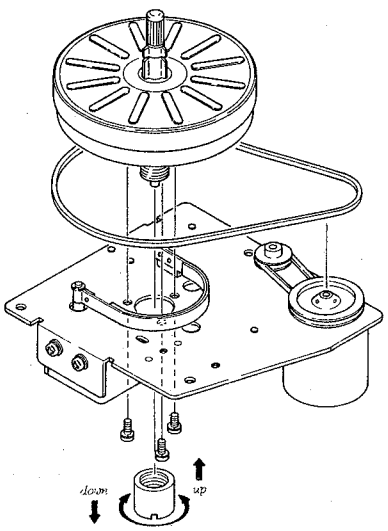

Fig. 6-5 Reel Table Removal

TAPE GUIDES REMOVAL

See illustration for complete disassembly instructions.

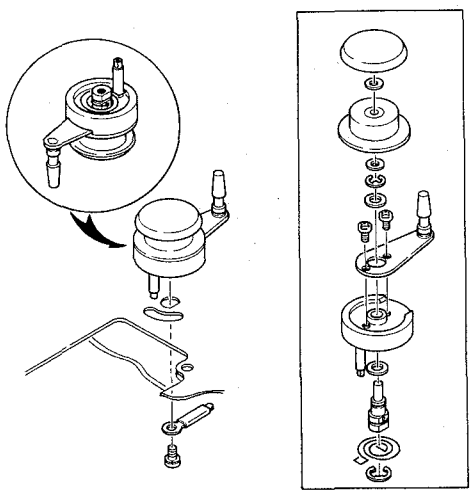

Fig. 6-6 Tape Guide Removal

TEAC MAINTENANCE EQUIPMENT

TEAC TZ-261
Cleaner

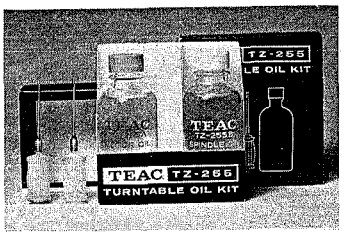

TEAC TZ-255
Oil Kit

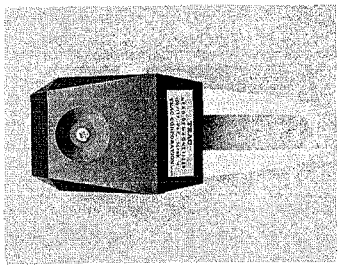

TEAC E-1
Head Demagnetizer

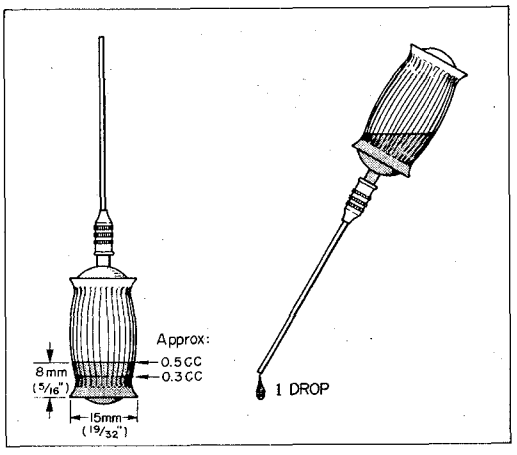

TEAC Oil Syringe
-Example-

7. SERVICING AND MAINTENANCE

1. Power supply:

   Make sure that the power supply is stable at the rated voltage. Fluctuations will result in uneven tape speed, and wow and flutter in the recorded signal.

2. Cleaning the tape path:

   TEAC TZ-261A for Head and metal cleaning, TZ-261B for Pinch Roller (Rubber) cleaning must be used.

3. Demagnetization of the head:

   If the record or playback head become magnetized, noise will increase and fidelity will deteriorate. For this reason, it is advisable to use brass or other such non-magnetic tools when working near the heads.
   Similarly, the use of a tester or vacuum tube ohm-meter should be avoided in checking the heads, as these instruments operate by applying a DC current, and will thus induce magnetism. If the heads have had any contact with DC currents or magnetic tools, demagnetize them with a TEAC Model E-1 Head Demagnetizer.

4. Major cleaning and lubrication:

   Under normal operating conditions, lubrication is required only once each year. Before lubricating, clean the reel assembly drive belts and drive pulleys and the tape guide rollers.

   Approximately once each year or after 2,000 hours of use, apply TEAC TZ-255 Lubricating Oil to the following places only;

   Pinch roller shaft bearings ···· 1 drop
   Guide Rollers (LEFT/RIGHT) ····· 2 drops

NOTE

Motors: The three DC motors of 5500/5300 are made with sealed, oil-less-metal bearings. Do not attempt to lubricate as it is required.

WARNING

Excessive oiling will scatter oil inside the deck. This oil will cause reel assembly drive belt slippage and other difficulties. Check for slippage and clean all parts inside the deck before operating after lubrication.

8. HEAD ALIGNMENT

HEAD ASSEMBLY (head cluster) is adjusted to very close tolerance at the factory and normally requires only minor alignments or adjustments after replacement on the deck. Complete readjustment of the HEAD ASSEMBLY will be necessary when an individual head is replaced.

HEIGHT ADJUSTMENT

RECORD HEAD: The record head pole should be above the edge of a threaded tape by the width of a thin pencil line.

PLAYBACK HEAD: (FORWARD) The forward playback head pole should be even with the top of a threaded tape.

PLAYBACK HEAD: (REVERSE) The pole of the reverse head should be even with the bottom of a threaded tape.

ERASE HEAD: Erase section should be a heavy pencil line above.

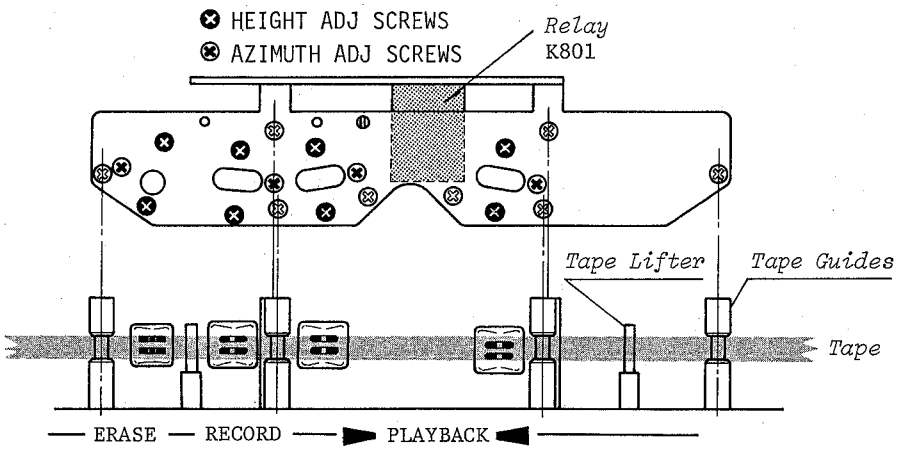

Fig. 8-1 Head Configuration and Alignments

HEADS REMOVAL AND WIRING

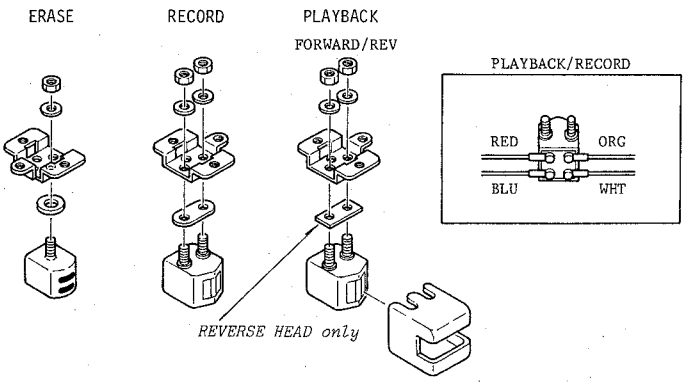

Fig. 8-2 Head Removal and Wiring

MIS—ALIGNMENT OF THE HEADS —EXAMPLES—

* ALIGNMENT - The physical positioning of a tape head relative to the tape itself. Alignment in all respects must conform to rigid requirements in order for a unit to function properly.
* AZIMUTH - The angle of a tape head pole-piece gap relative to the direction of tape travel.

  NOTE: In order for a tape unit to work at its best, with its own tapes as well as ones made on other units, its play and record heads must be aligned to correct the 4 possible errors as illustrated below.

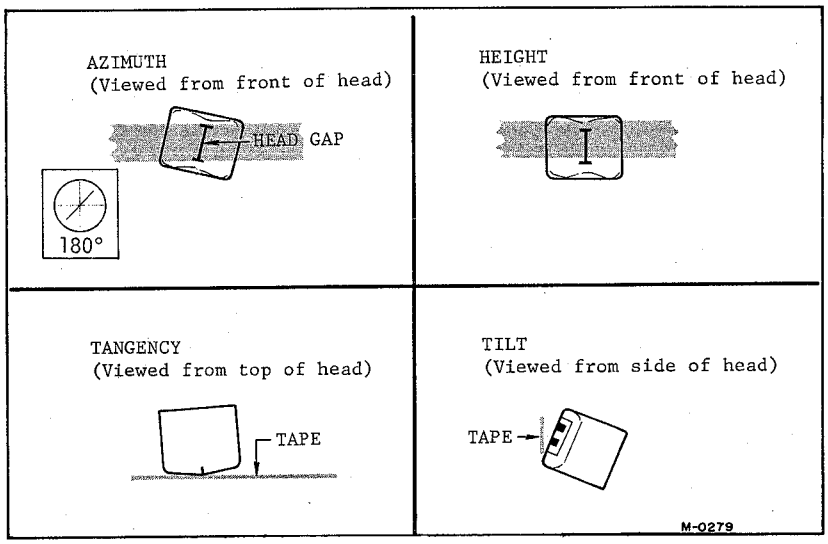

Fig. 8-3 Head Mis-Alignment -Examples-

HEAD ASSEMBLY REPLACEMENT

To change the head assembly as a unit, remove the 6 mounting screw, and disconnect the cables.

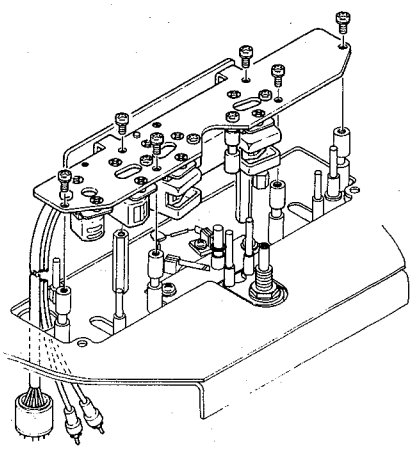

Fig. 8-4 Head Assy Replacement

9. MEASUREMENT AND ADJUSTMENT
-MECHANICAL-

The TEAC A-5500/5300 uses highly reliable DC Motors for both reel motors and the direct-drive capstan system. It should require a minimum of mechanical maintenance or adjustment. These adjustments are made at the factory. Readjustments should only be required after long periods of operation or component replacement.

ADJUSTMENT OF D.C. [on the STABILIZER UNIT]

It is important that the unit be set the voltage and freqùency of your locality.

Adjustment Procedure

1. Remove the rear panel. (3 ea. wood screws, 3 ea. set screws)
2. Place the POWER switch to "ON".
3. Connect a VOM or VTVM to the 24 V Test Point indicated.
4. Adjust VR-21 if needed to obtain 24 V ±0.5 VDC.
5. Check the 5 V Test Point for 5 V ±0.25 VDC; VR-22.

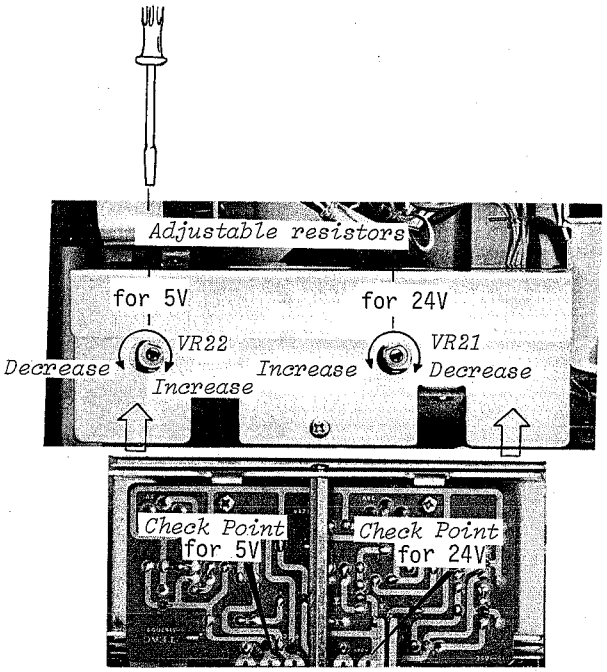

Fig. 9-1 Adjustment Locations

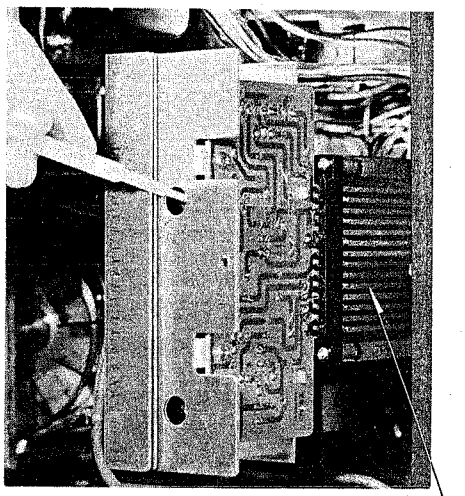

This adjustment is simplified by using TEAC PC Board Extender Part Number 51670400

Fig. 9-2 TEAC PC Bd. Extender

PINCH ROLLER PRESSURE

NOTE: Pinch roller pressure is supplied by the pinch roller spring arm and it is most important that the solenoid plunger be fully bottomed before taking pressure measurement.

1. Load tape or block the shut-off arm in the "ON" position.
2. Attach a suitable spring scale to the pinch roller shaft.
3. Place the unit in the PLAY mode (▶), and holding the spring scale as illustrated, slowly draw it away from the pinch roller. (Do not allow the string to rub against the pinch roller.)
4. Note the reading on the spring scale at the instant the pinch roller stops rotating.
5. The scale should indicate 2 kg ±200 g.
6. If adjustment is necessary, loosen the 4 mounting screws (* mark) on the capstan solenoids and position the solenoids for optimum pressure.

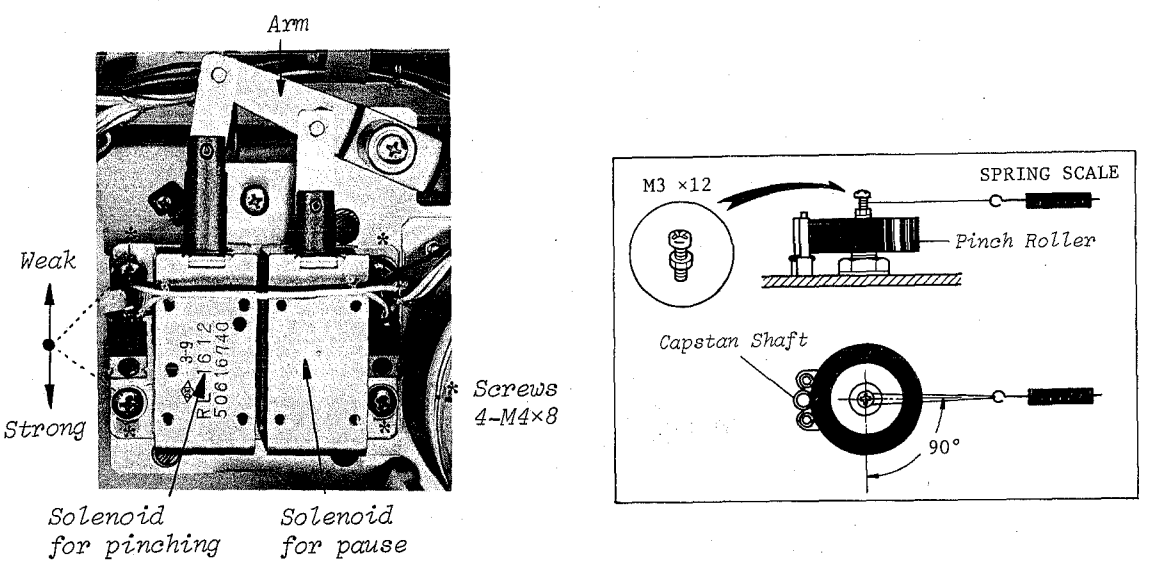

Fig. 9-3 Pressure Measurement and Adjustment Locations

REEL HEIGHT ADJUSTMENT

Reel height adjustment is required only if a motor has been replaced or if the tape rubs excessively against the reel flanges. Adjustment is accomplished by the Fine Adjustment screw on the rear of the reel turntable. Adjust to the standard height to center tape on the reel for smooth tape travel.

CAUTION: The adjustment screws are also caps on the reel table assemblies which will come off if turned excessively counter-clockwise.

REEL TORQUE ADJUSTMENT LOCATIONS

NOTE

Back Tension and Take-up Torque should be exactly within the specified limits given on the next page (TORQUE MEASUREMENT PROCEDURES).

VOLTAGE PRE-CHECK

It may be necessary to verify correct motor voltage before measuring reel motor torque. Optimum voltage is approximately 2 volts (DC).

Procedure:

1. With Power "ON", confirm deck is in the "STOP" mode.
2. Connect a VOM or VTVM across the motor terminals (Points "A" and "B") as shown.
3. Adjust the "Back Tension" VR's (on the Reel Drive unit) for a reading of approx. 2 V. Refer to Adjustment Locations below.

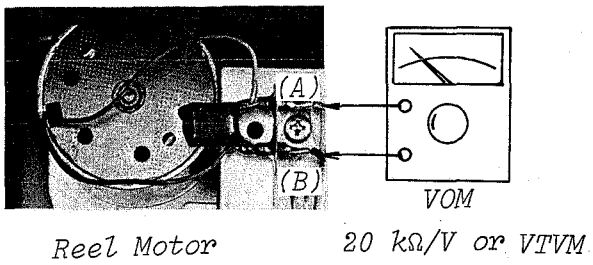

Fig. 9-4 Connect Point "A" and "B"

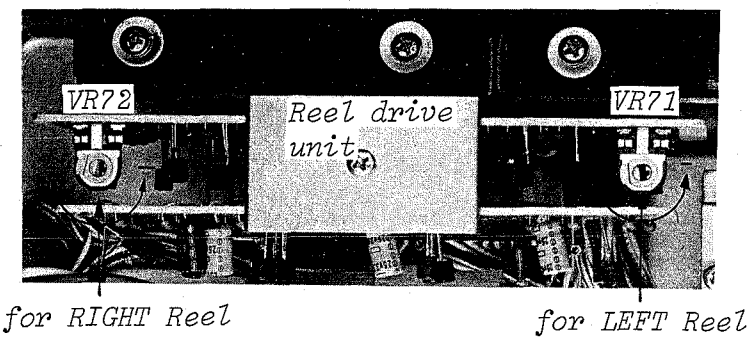

Fig. 9-5 Back Tension Voltage Adjustment Locations

TORQUE MEASUREMENT PROCEDURE

NOTE

All Torque and Tension Measurements must be made with the automatic shut-off switch (Right Tension Arm) blocked to the "ON" position.

Back-tension (FORWARD/REV):

1. Block the shut-off arm in the ON position.
2. Place an empty 7" reel with a 2" diameter hub on the left reel table.
3. Rotate the reel and wind several turns of string around the hub. Attach spring scale to string.
4. Place the unit in the (▶) Play mode.
5. Pull the scale away from the reel against the motor torque, with a steady smooth motion.
6. Note the scale reading while it is in steady motion. (The string must not rub the reel flanges.)
7. Adjust VR-71/VR-72 as needed to obtain tension of 200 g-cm ±50.

   See Fig. 9-5 Adjustment Locations.

Take-up torque (FORWARD/REV):

1. Place the empty reel and attached spring scale on the right reel table.
2. Place the unit in the (▶) Play mode.
3. Allow the rotation of the reel to slowly draw the scale toward the hub.
4. Hold the spring scale with enough force to allow a steady reading.
5. It should be approximately 500 g-cm ±100. No adjustment provided. Check reel motor if reading is beyond tolerance.

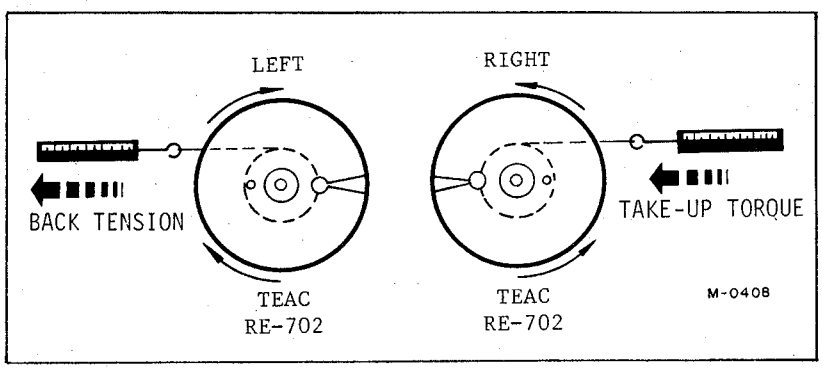

Fig. 9-6 Torque Measurements

BRAKE TORQUE

The brake torque is actuated mechanically. Pressure is set by the variable spring force. While making these measurements and adjustments, be careful not to bend the brake bands. As brake torque will change with cleaning, brake drums and brake shoes should be cleaned only when absolutely necessary. If cleaning is required, use TEAC cleaner TZ-261B. After cleaning operate the machine for several hours of STOP/START operation before performing the procedures below.

Brake adjustments are made with "NO" power connected to the equipment.

1. Place an empty 2" hub reel on the left reel table, and fasten one end of a 30" length of string to the reel anchor.
2. Wind several turns of string counterclockwise around the hub and attach a suitable spring scale to the free end of the string.
3. Take a reading only when the reel is in steady motion since the force required to overcome static friction will produce a false, excessively high initial reading.
4. The reading should be 1000 g-cm ±100 g-cm.
5. If adjustment is required, loosen the 2 screws holding brake Arm Ass'y as shown and re-position the brake for optimum torque.
6. The adjustment of the right brake is the same, with the exception that rotations are clockwise.

NOTE: The difference in reading between the right and left brakes should be kept within 100 g-cm.

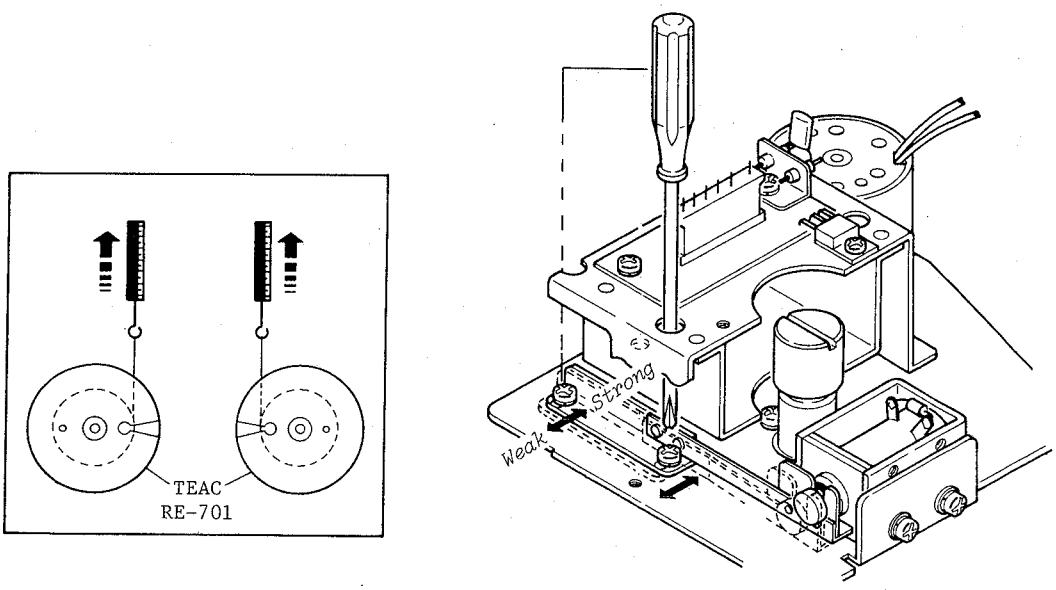

Fig. 9-7 Torque Measurement and Brake Assy ADJ. Location
(Reel Drive Assy should not be removed for above adjustments.)

TAPE SPEED ADJUSTMENT

The tape speed should be measured using TEAC flutter free tape, Model YTT-2003 (19 cm·7-1/2), 2002 (9.3 cm·3-3/4).
These tapes contain a highly accurate 3000 Hz tone. Connect a digital frequency counter to either line OUTPUT jack.
The indicated frequency should be 3000 Hz (±30 Hz or less) for both speeds. If necessary, adjust "adjustable resistors" on the SERVO AMPL see Fig 9-8.

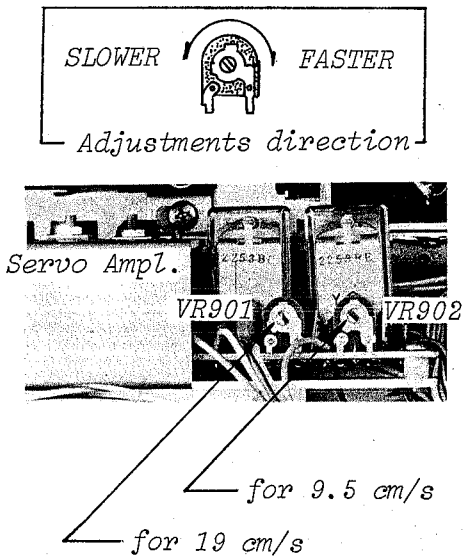

Fig. 9-8 Adjustment Locations

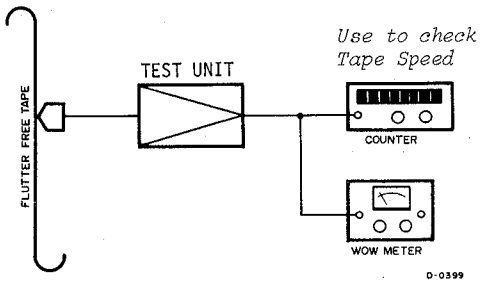

Fig. 9-9 Test Equipment Set-up

FLUTTER

Flutter should be measured in Playback mode using a TEAC flutter free tape YTT-2003 (7-1/2ips), 2002 (3-3/4ips) and Meguro model MK665B flutter meter. Measurement of flutter should be made in accordance with NAB standards. Values obtained with different standards of equipment cannot be compared.

Flutter should not exceed.	7-1/2 ips:	0.18% (RMS)	0.08% (W-RMS)
	3-3/4 ips:	0.20% (RMS)	0.10% (W-RMS)

These figures apply to any tape position and direction (such as full take-up reel, full supply reel or about mid-point).
If there is excessive wow and flutter, examine the pinch roller, belt, motors, capstan shaft, and reel rest for "grease", "oil", "dirt" and/or "wear". Also examine the tape counter assy for evenness of operation.

10. ELECTRICAL
ADJUSTMENT LOCATIONS

IMPORTANT: This portion of the Manual is applicable only for the TEAC A-5500. Please see another ELECTRICAL ADJUSTMENTS Section beginning on page 33 for the A-5300.
The A-5500 DOLBY DECODER and ENCODER Adjustments themselves are critical and should only be performed by skilled engineers.

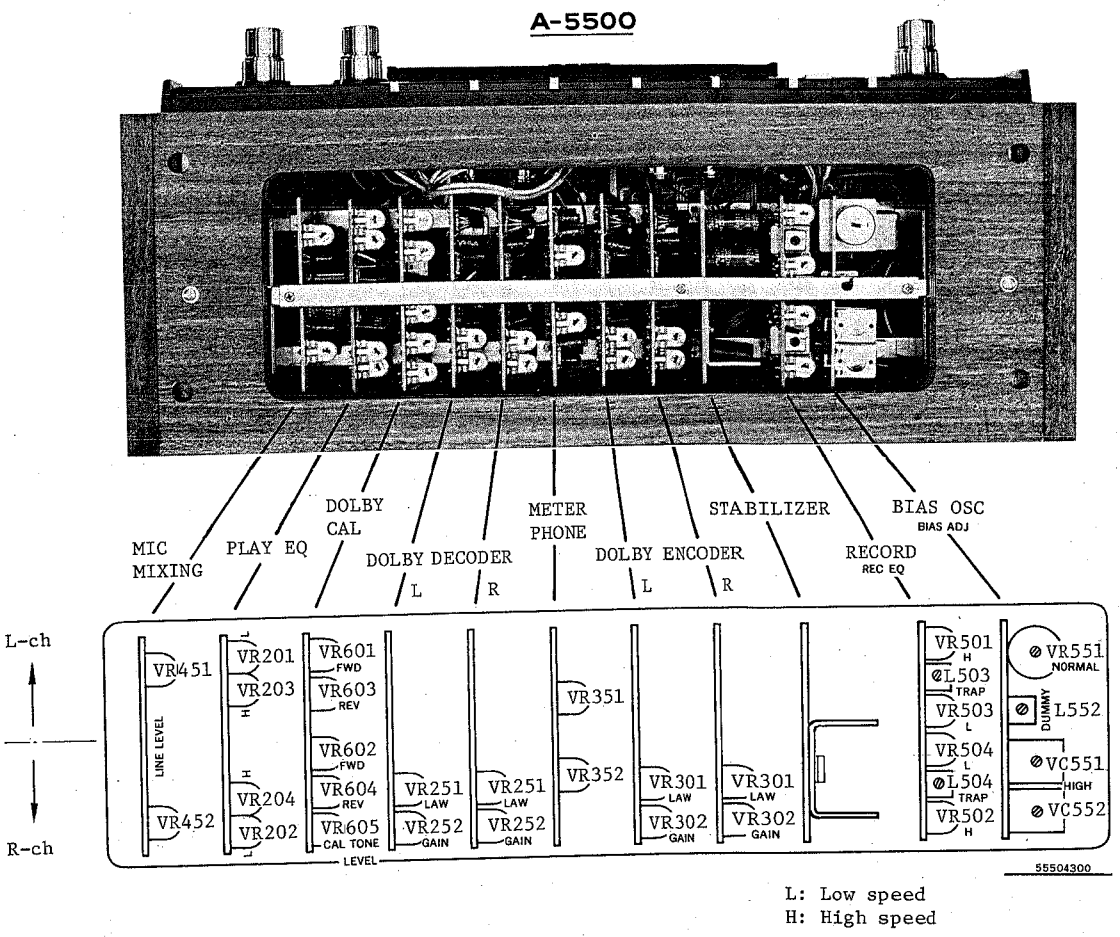

Fig. 10-1 Amp PC Board Locations and Adjustment Points

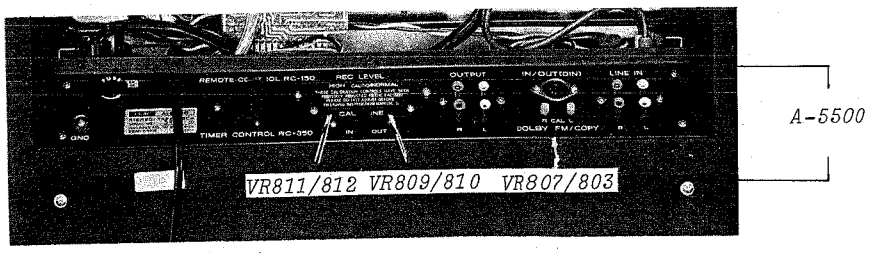

Fig. 10-2 Adj. Location on Rear Panel

ELECTRICAL ADJUSTMENT

-NOTE-

* Before performing maintenance on this unit, it is highly necessary to thoroughly clean and demagnetize the entire tape path. TEAC maintenance equipment to be used includes:

  TEAC TZ-261 A/B for cleaning
  TEAC TZ-255 A/B for oiling
  TEAC E-1 for demagnetizing

* It is important that the unit must be matched to the voltage and frequency of your locality.
* TEAC specified standard Test Tapes and Test Equipment must be used when performing maintenance to insure reliable results.
* Procedures for checks and adjustments, unless otherwise indicated, are for the left channel at a tape speed of 19 cm·7-1/2ips.
  The same procedures are to be applied to the right channel and again for both channels at 9.5 cm·3-3/4ips.
* All controls mentioned in this book will be printed in capital letters and will be exactly as they appear on the unit.
* All internal adjustments are accessible by removing bottom cover and the PC Board retaining bar, except for those adjustment portions such as REC LEVEL, CAL TONE and DOLBY FM/COPY are shown on the Rear Connections-Panel of the unit.
* Customer's preferred tape may be substituted if requested.
* TEAC Test Tape YTT-8003 is similar with Group A "Low Noise" type tapes. Use your selected tape from Group A below if YTT-8003 is not available.

RECOMMENDED SELECTIONS OF THE EQ & BIAS SWITCH POSITIONS FOR VARIOUS TYPES OF TAPE

	SW / 1-mil- (35μ-thick) tapes	REC EQ SW position		REC BIAS SW position	
		"NORMAL"	"HIGH"	"NORMAL"	"HIGH"
"Low-Noise" type Group A	FUJI FILM FB-151 FUJI FILM FG-150 MAXELL UD-35 SONY SLH-Series TDK SD-150 BASF LP-35LH SCOTCH 212 MEMOREX 1800		■		■
"Low-Noise" type Group B	SCOTCH 207 AGFA-GEVAERT PE-36	■			■
Conventional type	SCOTCH 150 or its equivalent	■		■	

■ marks show the optimum setting of equalization and bias selected.
Empty boxes show unrecommended setting.

11. MEASUREMENT AND ADJUSTMENT
-ELECTRICAL-

ADJUSTMENT SEQUENCE

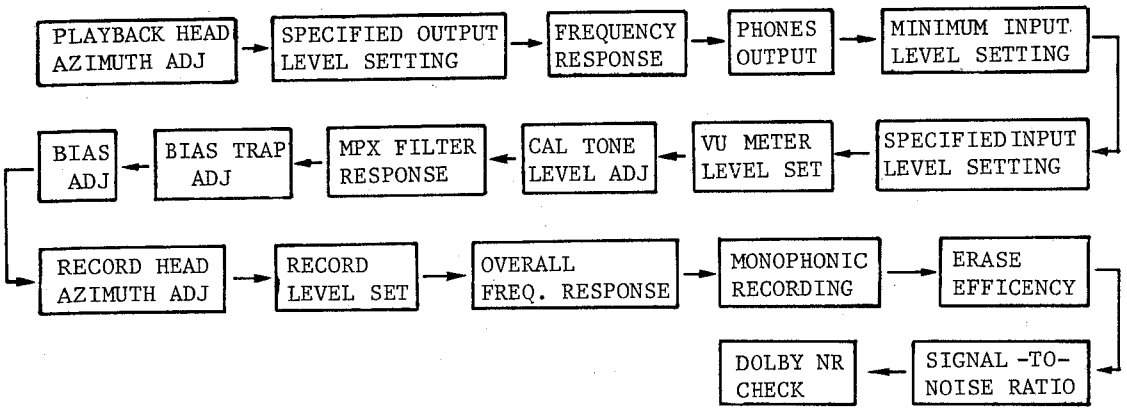

PLAYBACK HEAD AZIMUTH ADJUSTMENT

NOTE: After head replacement or if, during playback, a slight pressure on the heads results in a rise of the reading of the Test-Set (M-826A), head azimuth should be readjusted.

Coarse Adjustment:

1. Connect a Test-Set to either OUTPUT jack. Remove the Head Housing.
2. Thread a TEAC Test Tape YTT-1003 on the unit.
3. Play the 15 kHz Test Tone in Section 2 of the Test Tape.
4. Slowly rotate the azimuth screw until maximum indication is obtained on the Test-Set.

Fine Adjustment:

NOTE: It is absolutely essential to accomplish the coarse adjustment before performing the fine adjustment to avoid phase errors larger than 45°. After coarse adjustment, do not make large corrections, turn azimuth screw within 1/4 turn or less.

5. Connect the Test equipment as shown in Fig. 11-1.
6. Play a 50 Hz∿10 kHz signal and adjust the azimuth screw unit the oscilloscope shows that the signals are less than 45° out of phase.
7. Secure the screw with insulating lock paint.

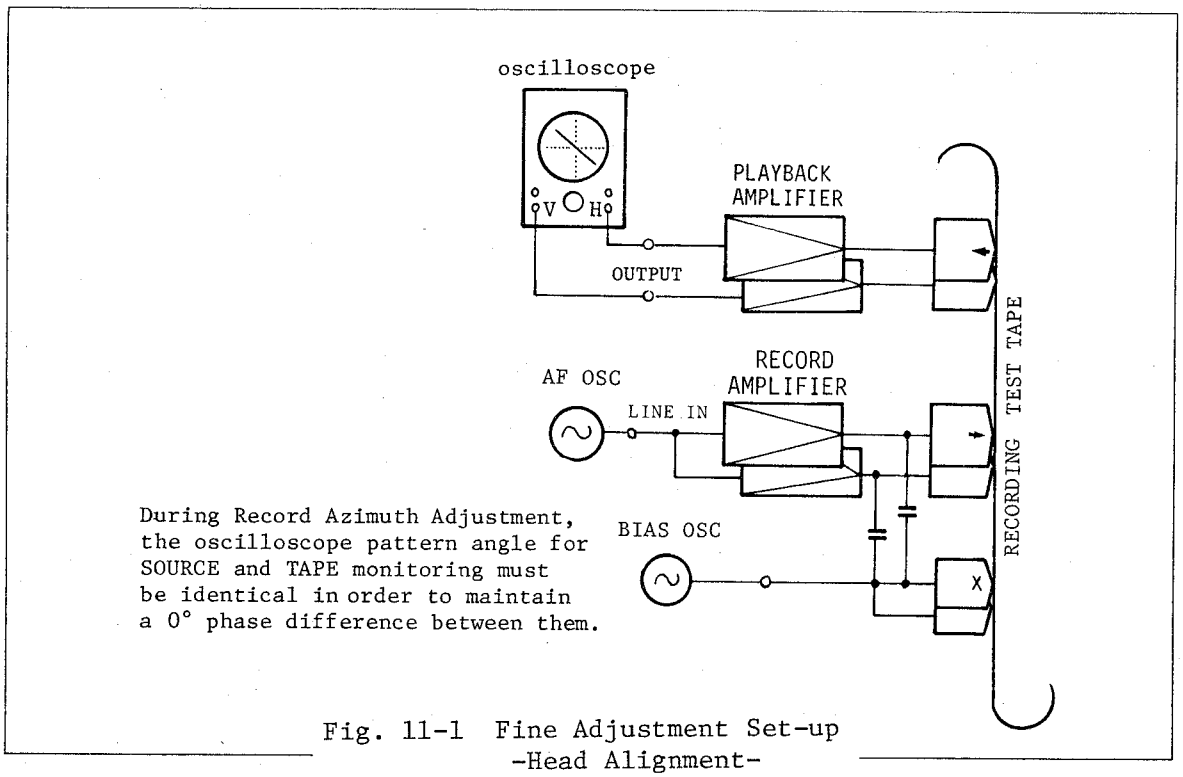

Fig. 11-1 Fine Adjustment Set-up
-Head Alignment-

SPECIFIED OUTPUT LEVEL SETTING

NOTE: Connect a 10 kΩ load resistor to the OUTPUT jacks for all audio measurements when not using TEAC Test-Set (M-826A).

Forward play (▶):

1. Place the MONITOR switch to the TAPE position.
2. Turn the OUTPUT control fully clockwise (MAX).
3. Thread TEAC Test Tape YTT-1003 on the unit. Operate at 19 cm·7-1/2ips.
4. Play the 400 Hz in Section 1 of the Test Tape. This tone is recorded at operating reference level (1% of the THD level).
5. Adjust PLAY LEVEL VR-601/602 for approx. 580 mV at the Test Point (T·P) on the DOLBY DECODER PC Board, using a VTVM (1 MΩ or over).
6. Depress (◀) Reverse play button.
7. Adjust PLAY LEVEL VR-603/604 as in Forward play mode.
8. Return to Forward Play mode.
9. Align the reference marks of the OUTPUT controls to the 4 o'clock position. This will give approximately -8 dB at the OUTPUT jacks.

IMPORTANT: This is the Specified Output Level setting. Do not disturb this setting until the remaining adjustments have been completed. Mark with "Memory Marker".

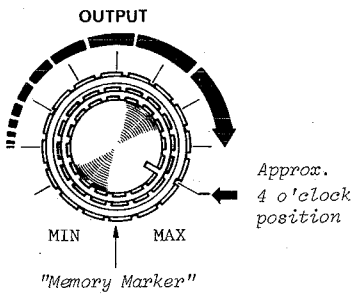

Fig. 11-2 Specified OUTPUT position

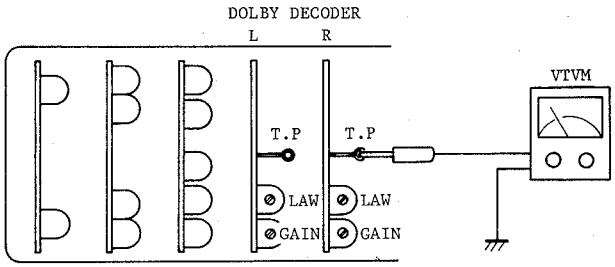

Fig. 11-3 580 mV Test Points (DOLBY DECODER PC BOARD)

FREQUENCY RESPONSE

1. Place Tape SPEED switch in 19 cm·7-1/2 position.
2. Thread a TEAC Test Tape YTT-1003 on the unit.
3. Compare the readings obtained on the Test-Set with the Response Limits given in Fig. 11-4.
4. If adjustment is required, adjust PLAY EQ VR-203/204 (HIGH) for 19 cm·7-1/2 speed (FWD and REV directions).
5. Change Tape SPEED switch to 9.5 cm·3-3/4 position.
6. Thread a TEAC Test Tape YTT-1002 on the unit.
7. Repeat Step 3. Check for best frequency response.
8. If fine adjustment is required, adjust PLAY EQ VR-201/202 (LOW) for 9.5 cm·3-3/4 speed. (FWD and REV direction).

NOTE

If the frequency response does not meet specified response limits specially in high-end of the spectrum, head should be checked for accumulated dirt or oxides. If clean, head azimuth must be re-adjusted.

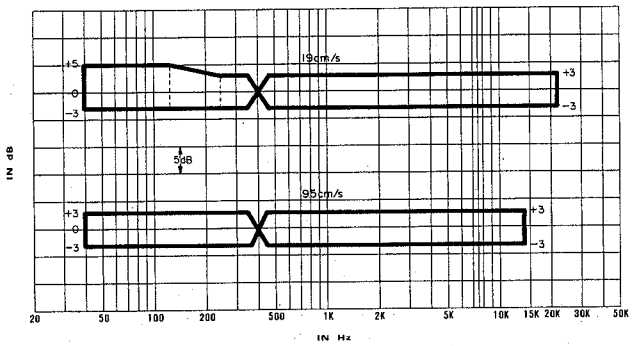

Fig. 11-4 Frequency Response Limits (Playback)

LEVEL DEVIATION

9. With a Test-Set connected to the OUTPUT jacks and using TEAC Test Tape, the readings listed below should be obtained at the specified frequencies and tape speeds.

SPEED	SIGNAL	DEVIATION
19 cm·7-1/2	400 Hz	0.5 dB or less
	16 kHz	1 dB or less
9.5cm·3-3/4	8 kHz	1 dB or less

PHONES OUTPUT CHECK

1. Place OUTPUT control at the Specified level setting (400 Hz signal at -8 dB).
2. Connect an 8Ω non-inductive resistor across the headphone jacks. Connect Test-Set across the resistor.
3. Test-Set should indicate -24 dB ±1 dB.

MINIMUM INPUT LEVEL SETTING

1. Connect an AF oscillator to the LINE IN jacks.
2. Place MONITOR switch in SOURCE, RECORD EQ and BIAS switches in HIGH position, and MODE L, R in ON position.
3. Apply a 400 Hz signal -18 dB to the LINE IN jacks.
4. Turn LINE control fully clockwise (MAX). Adjust VR-451/452 on the MIC MIXING PC BOARD for approx. 580 mV at the Test Point (T·P) on the DOLBY ENCODER PC BOARD (Left and Right channel).
5. Check for -8 dB at the OUTPUT jacks.

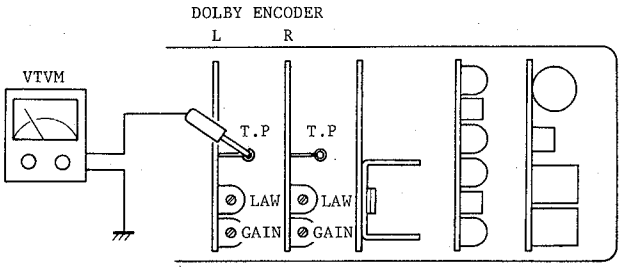

Fig. 11-5 580 mV Test Points (DOLBY ENCODER PC BOARD)

SPECIFIED INPUT LEVEL SETTING

6. Apply a 400 Hz signal at -8 dB to the LINE IN jacks.
7. Adjust the LINE control for -8 dB at the OUTPUT jacks.

   NOTE: Do not disturb the Specified Input Level position on these controls until the remaining checks and adjustments are completed. The difference between the channels must not exceed ±2 dB as indicate on the Test-Set. Adjust VR-451/452 (L-ch/R-ch) for identical Levels.

VU METER LEVEL SET

Verify OUTPUT Controls at the Specified Output Level.

8. Place the MONITOR switch to the SOURCE position.
9. Apply a 400 Hz signal at -8 dB to the LINE IN jacks.
10. Adjust VR-351/352 (METER PHONE PC BOARD) for 0 VU on the VU meter.

CAL TONE LEVEL ADJUSTMENT

With controls set as described above in MINIMUM INPUT LEVEL SETTING, -----

11. Place the CAL TONE switch on the Back panel to the IN position.
12. Align VR-605 for 0 VU on the VU meter. If readings between channels are different, balance the readings around 0 VU.

NOTE

The following checks and adjustments must be performed with the CAL TONE switch in the OUT position.

MONITOR FREQUENCY RESPONSE CHECK

13. From the Specified Input (400 Hz, -8 dB), sweep frequencies from 30 to 20,000 Hz. Test meter readings should be ±3 dB at all frequencies.

MPX FILTER RESPONSE CHECK

While performing Step 13 above,

14. Change the MPX FILTER switch to IN at 19 kHz. The Test-Set Meter indication should decline by 30 dB or more. Return MPX FILTER switch to OUT.

BIAS TRAP ADJUSTMENT

NOTE: The bias trap tank circuit keeps the bias signal from reaching the record and monitor amplifier and under normal "no signal" conditions, voltage should not be present at the OUTPUT jacks.

1. Place MONITOR switch SOURCE position, BIAS switch HIGH, and RECORD MODE switch to "ON". Place control switches for the REC "PAUSE" mode.
2. Connect a VTVM or oscilloscope across the RECORD PC Board Test point and ground.
3. Adjust L-503/504 for minimum reading using non-inductive driver.
4. Change the MONITOR switch to TAPE position.
5. Adjust L-252 (L-ch, R-ch) for minimum bias leakage reading at the OUTPUT jacks. spec. -40 dB or less

NOTE: This procedure is simplified using the PC Board Extender (foil side).

BIAS ADJUSTMENT

NOTE: Adjust bias traps (above) before proceeding. The following adjustments are made only at 9.5 cm·3-3/4 Tape speed.

1. Thread record Test Tape YTT-8003 or equivalent tape on the unit.
2. Place RECORD BIAS switch HIGH, EQ switch HIGH position.
3. Place MONITOR switch in the TAPE position.
4. Apply 7 kHz signals at -18 dB to the LINE IN jacks.
5. Adjust capacitor VC-551/552 for a peak on the Test-Set, then turn the capacitor clockwise until a decrease of 2.5 dB from the peak is obtained.

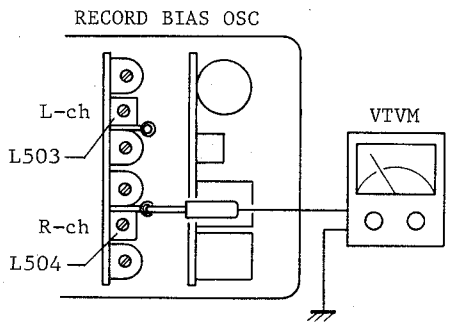

Fig. 11-6 Bias Trap Check Point

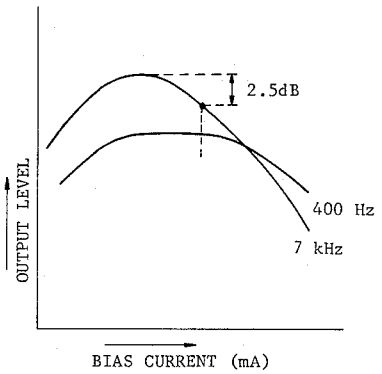

Fig. 11-7 Bias Limits chart

RECORD HEAD AZIMUTH ADJUSTMENT

Coarse Adjustment:

NOTE: The effect of turning the azimuth screw will not immediately register on the Test-Set. A slight delay will be noticed. Therefore, the screw must be rotated slightly with a pause to see the effect. See Fig. 11-8.

1. Connect a Test-Set to the OUTPUT jack and an AF oscillator to the LINE IN jack, then set the AF oscillator to 10 kHz.
2. Make certain that the LINE controls are at the Specified Input Level positions.
3. Place the MONITOR switch to SOURCE and adjust the AF oscillator to obtain a signal of 20 dB below the Specified Output Level. (The Test-Set will indicate -28 dB.)
4. Thread a record Test Tape on the unit.
5. Place the MONITOR switch in the TAPE position.
6. While recording adjust the azimuth screw for maximum indication on the Test-Set.

   Proceed to the next page for "Fine Adjustment".

Fine Adjustment:

NOTE: It is absolutely essential to accomplish the coarse adjustment before performing the fine adjustment to avoid phase error larger than 45°.

7. Connect the test equipment as shown in Fig. 11-1.
8. Apply a 7.5 kHz signal at -28 dB to the LINE IN jacks and record this signal.
9. Carefully adjust the azimuth screw until the oscilloscope shows the signals to be in phase.
10. Secure the screw with insulating lock paint.

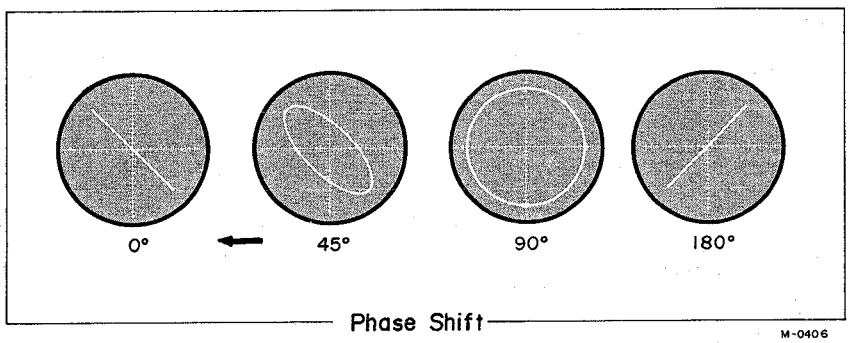

Fig. 11-8 Phase shift

Refer to Fig. 11-1 Fine Adjustment Set-up (playback)

REC LEVEL SET (HIGH)

NOTE: The OUTPUT control must be at the Specified Output Level position (-8 dB at OUTPUT jacks), and the LINE INPUT controls at the Specified Input Level Setting.

1. Thread a record Test Tape TEAC YTT-8003 or equivalent on the unit.
2. Apply a 400 Hz signal at -8 dB to the LINE IN jacks.
3. Place Tape SPEED switch to the 19 cm·7-1/2 position.
4. Place the MONITOR switch to TAPE, EQ/BIAS switch to HIGH position.
5. Adjust REC LEVEL VR-811/812 (on the rear panel) for -8 dB signal at OUTPUT jacks.
6. Check and obtain 0 VU reading on the VU meters.

OVERALL FREQUENCY RESPONSE (HIGH)

7. Apply signals swept from 40 Hz∿24 kHz at -28 dB to LINE IN jacks and record them.
8. Adjust VR-501/502 for best response.

9. Place the Tape SPEED switch to the 9.5 cm·3-3/4 position.
10. Apply signals swept from 40 Hz∿15 kHz at -28 dB to the deck INPUT jacks.
11. Adjust VR-503/504 as in 19 cm·7-1/2 speed.

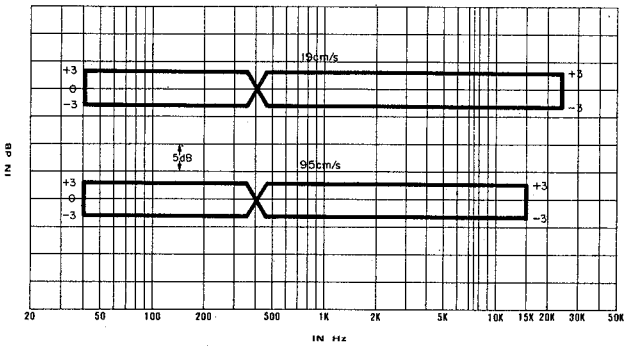

Fig. 11-9 Frequency Response Limits (HIGH)

RECORD LEVEL SET (NORMAL)

1. Thread a record Test Tape SCOTCH #150 or equivalent on the unit.
2. Place RECORD BIAS switch NORMAL, EQ switch NORMAL position.
3. Apply a 400 Hz signal at -8 dB to the LINE IN jacks.
4. Adjust REC LEVEL VR-809/810 for -8 dB signal at OUTPUT jacks (These adjustments are on the rear panel).

OVERALL FREQUENCY RESPONSE (NORMAL)

5. Apply signals swept from 40 Hz∿22 kHz at -28 dB to LINE IN jacks and record.
6. Adjust VR-551 for best response (L-ch, R-ch both).

7. Change the Tape SPEED switch to the 9.5 cm·3-3/4 position.
8. Apply signals swept from 40 Hz∿13 kHz at -28 dB.
9. Check for overall frequency response. No further adjustment is provided.

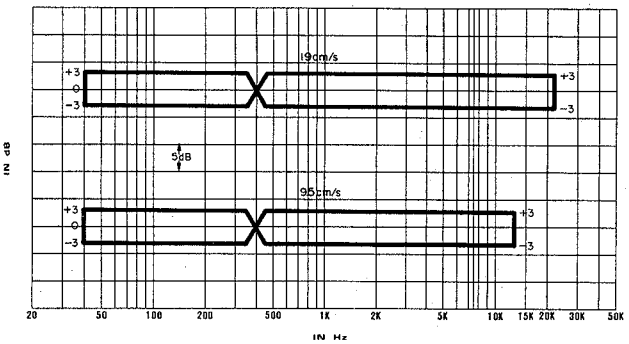

Fig. 11-10 Frequency Response Limits (NORMAL)

MONOPHONIC RECORDING

1. Place the RECORD MODE switch L (or R, not both) to the "ON" and R (or L) to the OFF position.
2. Apply signals swept from 40 Hz∿24 kHz at -28 dB to LINE IN jacks and record (YTT-8003 or equivalent).
3. If necessary, adjust L-552 (on the BIAS OSC PC Board) for best response.

ERASE EFFICIENCY

NOTE: To measure erase efficiency, a 1 kHz Band Pass Filter (TEAC M-206A) must be used.

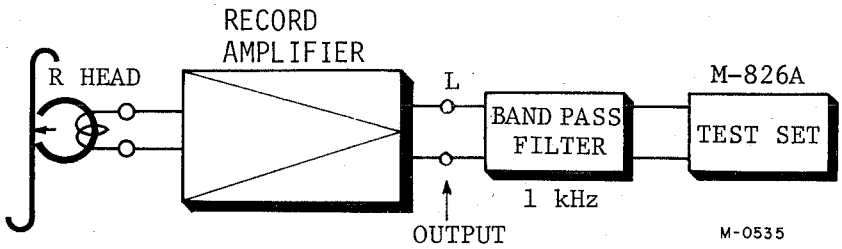

Fig. 11-11 Erase Efficiency Check Set-up

1. Thread blank YTT-8003 or equivalent tape on the unit.
2. Apply a 1 kHz signal at 0 dB to the LINE IN jacks.
3. Place unit in the RECORD mode and record this signal.
4. Rewind the recording to the beginning and remove the AF oscillator from the LINE IN jacks.
5. Connect a Test-Set (M-826A) to the OUTPUT jack through the 1 kHz Band Pass Filter, select TAPE monitor.
6. Place unit in the RECORD MODE and "record" (erase) over this portion of tape. Monitor the tape output on the Test-Set.
7. The Test-Set should indicate -68 dB or less.

LEVEL DEVIATION [RECORD-PLAYBACK]

1. Thread a reel of blank high output tape and select 7-1/2ips (19 cm/s).
2. Record a variety of frequencies, such as 400 Hz, 2 kHz, 5 kHz, 8 kHz, 10 kHz, etc., at the specified input setting with the RECORD BIAS switch to HIGH position. Record approximately 10 seconds of each frequency.
3. During playback at 7-1/2ips the output level should not vary more than 0.5 dB at 400 Hz, 1 dB at 10 kHz.
   With the unit tape speed at 3-3/4ips (9.5 cm/s), the tolerances are the same as at 7-1/2ips.

SIGNAL-TO-NOISE RATIO

PLAYBACK

IMPORTANT

OUTPUT controls should be at the Specified Output Level Settings. The signal-to-noise ratio must meet factory standards. The values given are obtained using an unweighted Test-Set (M-826A), with the supply and take-up motors having voltage applied but not rotating. The values are with reference to a 3% THD Peak Recording Level.

1. Thread a blank YTT-8003 on the unit.
2. Place the unit in the PLAY mode (▶) and engage PAUSE.
3. The Test-Set connected to the OUTPUT jacks should indicate -56 dB or less.
4. This corresponds to a signal-to-noise ratio of 48 dB (difference between residual noise -56 dB and specified output level -8 dB for 1% THD). For a 3% THD signal-to-noise ratio, -6 dB is added, giving 54 dB (3% THD is 6 dB above 1% THD level).

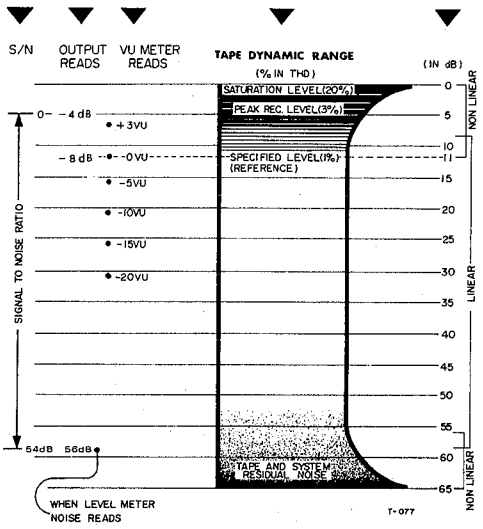

Fig. 11-12 Signal/Noise Computation

OVERALL

IMPORTANT: Clean and demagnetize the heads before proceeding. It is extremely important that all tests described in the preceding paragraphs have been completed and that all controls are left at their specified settings.

1. Thread a blank Test Tape YTT-8003 tape on the unit.
2. Remove the AF oscillator from the LINE IN jacks.
3. Place the unit in the RECORD mode with "no signal" applied. Note the point on the index counter where recording begins.
4. Rewind the tape to the beginning point and play it back.
5. The noise level as indicated on the Test-Set should be -47 dB or less (19 cm·7-1/2 speed).

DOLBY NR FUNCTION CHECK

DOLBY NR CHECK (1)

1. Place the DOLBY NR switch IN, FM COPY switch IN, and the MONITOR switch to SOURCE.
2. Turn the FM COPY VR (807,803) on the back panel to Maximum.
3. Apply a 100 Hz signal at -48 dB to the LINE IN jacks; note the Output reading on the Test-Set.
4. Change the input frequency to 5 kHz (-48 dB). The Test-Set indication should decline by 10 dB ±0.25 dB.
5. If readings are not within limits, recheck and adjust DOLBY ENCODER PC Board.(Fig. 11-5)

NOTE: The following checks and adjustments must be performed with the DOLBY FM/COPY switch OUT.

DOLBY NR CHECK (2)

6. Place the DOLBY FM/COPY switch OUT, DOLBY NR switch OUT, BIAS and EQ switches to HIGH, tape SPEED to 19 cm·7-1/2.
7. Thread a blank low noise/high output tape on the deck.
8. Record approx. 10 seconds of a 1 kHz signal at -28 dB and a 10 kHz signal at -48 dB.
9. Rewind the tape, playback the recorded signals but
10. while watching the Test-Set, set the DOLBY NR switch IN.
11. Comparing the outputs between DOLBY NR - OUT/IN, check
    at 1 kHz for a decline of 5 dB ±1 dB;
    at 10 kHz for decline of 10 dB ±1 dB.
12. If readings are not within limits, recheck and adjust DOLBY DECODER PC Board. (Fig. 11-3)

DOLBY NR CHECK (3)

13. Place the DOLBY FM/COPY switch OUT, DOLBY NR switch IN. BIAS and EQ switches to HIGH, tape SPEED to 19 cm·7-1/2.
14. Apply signals swept from 40 Hz∿22 kHz at -38 dB to LINE IN jacks and record.
15. Change the tape SPEED switch to the 9.5 cm·3-3/4 position.
16. Apply signals swept from 40 Hz∿14 kHz at -38 dB.
17. Check for best response. No further adjustment is provided.

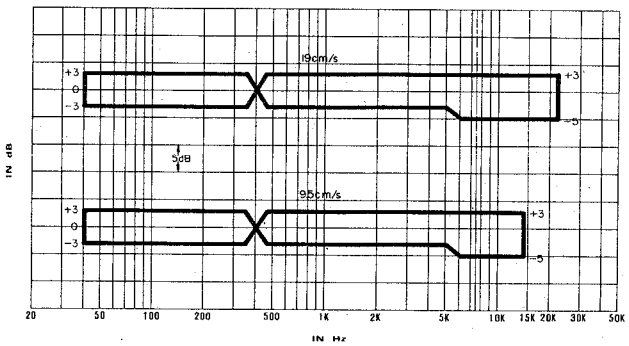

Fig. 11-13 Dolby NR response Limits

12. MEASUREMENT AND ADJUSTMENT
-ELECTRICAL-

A-5300

STEREO TAPE DECK

ADJUSTMENT LOCATIONS

IMPORTANT: This portion of the Manual is applicable only for the TEAC A-5300. Please see another ELECTRICAL ADJUSTMENTS Section beginning on page 20 for the A-5500.

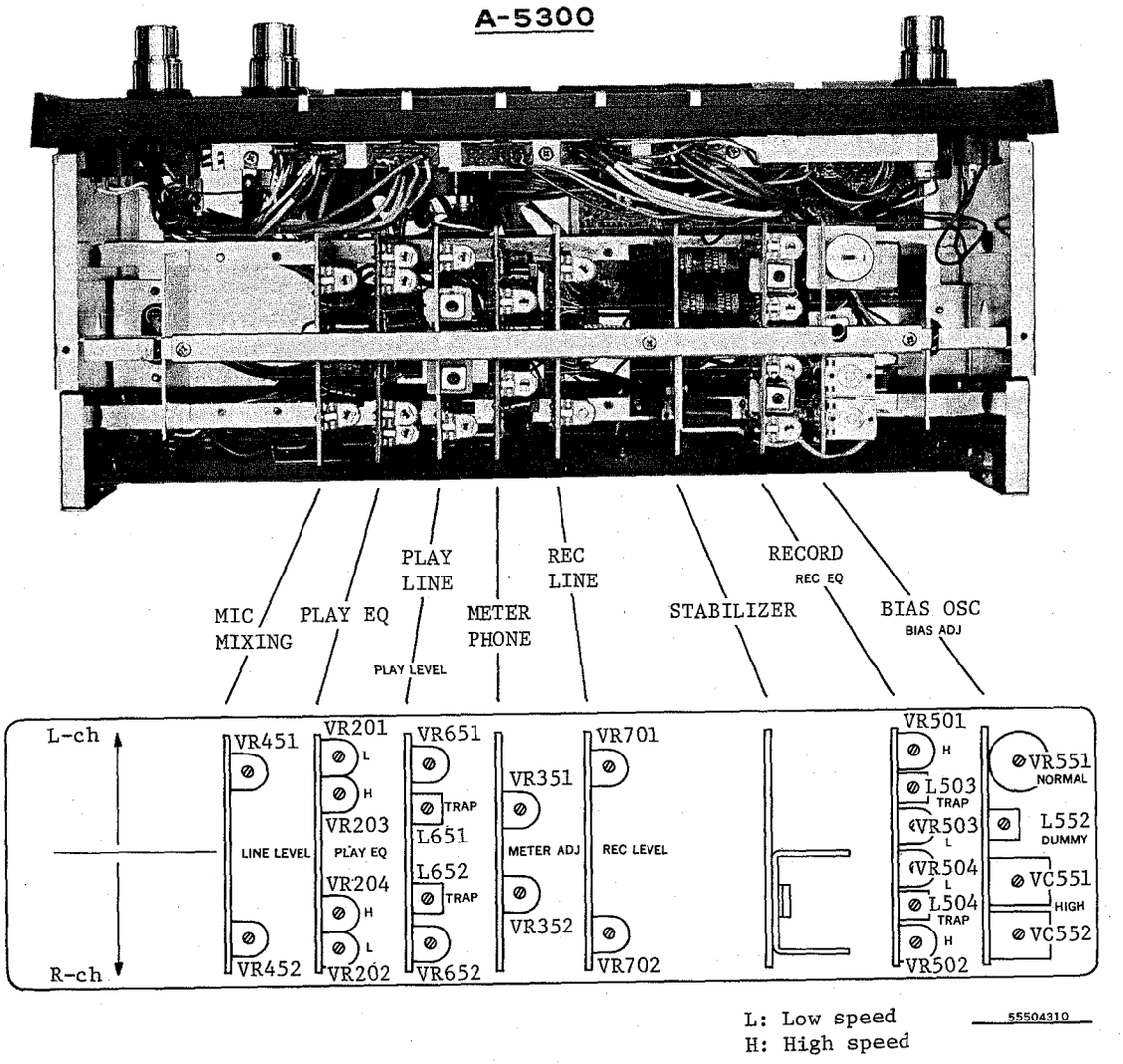

—BOTTOM VIEW—

Fig. 12-1 Amp PC Board Locations and Adjustment Points

ADJUSTMENT SEQUENCE

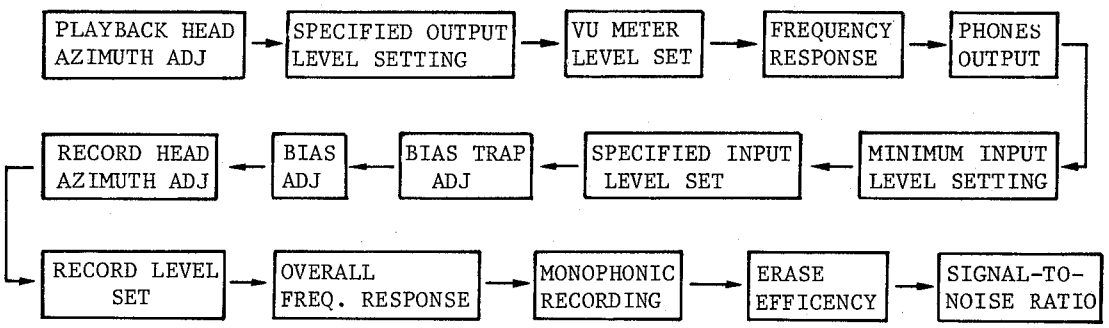

PLAYBACK HEAD AZIMUTH ADJUSTMENT

NOTE: After head replacement or if, during playback, a slight pressure on the heads results in a rise of the reading of the Test-Set (M-826A), head azimuth should be readjusted.

Coarse Adjustment:

1. Connect a Test-Set to either OUTPUT jack. Remove the Head Housing.
2. Thread a TEAC Test Tape YTT-1003 on the unit.
3. Play the 15 kHz Test Tone in Section 2 of the Test Tape.
4. Slowly rotate the azimuth screw until maximum indication is obtained on the Test-Set.

Fine Adjustment:

NOTE: It is absolutely essential to accomplish the coarse adjustment before performing the fine adjustment to avoid phase errors larger than 45°. After coarse adjustment, do not make large corrections, turn azimuth screw within 1/4 turn or less.

5. Connect the Test equipment.
6. Play a 50 Hz 10 kHz signal and adjust the azimuth screw until the oscilloscope shows that the signals are less than 45° out of phase.
7. Secure the screw with insulating lock paint.

SPECIFIED OUTPUT LEVEL SETTING

NOTE: Connect a 10 kΩ load resistor to the OUTPUT jacks for all audio measurements when not using TEAC Test-Set (M-826A).

Forward play (▶):

1. Place the MONITOR switch to the TAPE position.
2. Turn the OUTPUT control fully clockwise (MAX).
3. Thread TEAC Test Tape YTT-1003 on the unit. Operate at 19 cm·7-1/2ips.
4. Play the 400 Hz in Section 1 of the Test Tape. This tone is recorded at operating reference level (1% of the THD level).
5. Adjust PLAY LEVEL VR-651/652 to obtain an OUTPUT of -2 dB at the OUTPUT jacks.
6. Align the reference marks of controls so that they are at approx. the 3 o'clock position. This will give approx. -8 dB at the OUTPUT jacks.
7. Readjust VR-651/652 for a -8 dB level at OUTPUT jacks.

IMPORTANT: This is the Specified Output Level setting. Do not disturb this setting until the remaining adjustments have been completed. Mark with "Memory Marker".

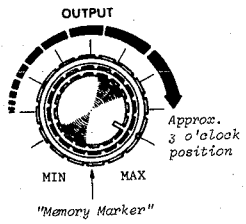

VU METER LEVEL SET

8. Place the METER switch to the NORMAL position.
9. Adjust VR-351/352 for a reading of 0 VU on the VU Meters on the lower scale.
10. Place the METER switch to the HIGH position. Check for 0 VU indication on the VU Meters upper scale.

FREQUENCY RESPONSE

1. Place Tape SPEED switch in 19 cm·7-1/2 position.
2. Thread a TEAC Test Tape YTT-1003 on the unit.
3. Compare the readings obtained on the Test-Set with the Response Limits given in Fig. 12-2.
4. If adjustment is required, adjust PLAY EQ VR-203/204 (HIGH) for 19 cm·7-1/2 speed (FWD and REV directions).
5. Change Tape SPEED switch to 9.5 cm·3-3/4 position.
6. Thread a TEAC Test Tape YTT-1002 on the unit.
7. Repeat Step 3. Check for best frequency response.
8. If fine adjustment is required, adjust PLAY EQ VR-201/202 (Low) for 9.5 cm·3-3/4 speed. (FWD and REV directions).

NOTE

If the frequency response does not meet specified response limits especially in high-end of the specturm, head should be checked for accumulated dirt or oxides. If clean, head azimuth must be readjusted.

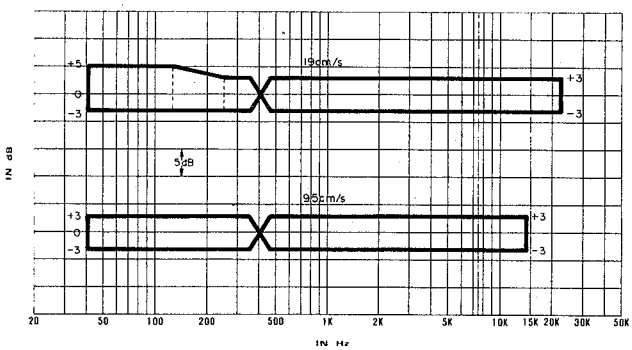

Fig. 12-2 Frequency Response Limits -PLAYBACK-

LEVEL DEVIATION

9. With a Test-Set connected to the OUTPUT jacks and using TEAC Test Tape, the readings listed below should be obtained at the specified frequencies and tape speeds.

SPEED	SIGNAL	DEVIATION
19 cm•7-1/2	400 Hz	0.5 dB or less
	16 kHz	1 dB or less
9.5cm•3-3/4	8 kHz	1 dB or less

PHONES OUTPUT CHECK

1. Place OUTPUT control at the Specified level setting (400 Hz signal at -8 dB).
2. Connect an 8Ω non-inductive resistor across the headphone jacks. Connect Test-Set across the resistor.
3. Test-Set should indicate -24 dB ±1 dB.

MINIMUM INPUT LEVEL SETTING

LINE Input:

1. Connect an AF oscillator to the LINE IN jacks.
2. Place MONITOR switch in SOURCE, RECORD EQ and BIAS switches in HIGH position, and MODE L, R in ON position.
3. Apply a 400 Hz signal -18 dB to the LINE IN jacks.
4. Turn LINE control fully clockwise, adjust VR-451/452 to obtain the specified output level of -8 dB at OUTPUT jacks.

MIC Input:

[This is a check only. No adjustments are to be made.]

5. After checking VR-451/452, apply a 400 Hz signal at -60 dB to the MIC IN jacks.
6. Rotate the MIC controls fully clockwise. This should give an output of -8 dB (specified output level).

   NOTE: Return MIC controls fully counterclockwise (CCW) to prevent noise insertion during the following steps.

SPECIFIED INPUT LEVEL SET

7. Apply a 400 Hz signal at -8 dB to the LINE IN jacks.
8. Adjust the LINE control for -8 dB at the OUTPUT jacks.

   NOTE: Do not disturb the Specified Input Level position of these controls until the remaining checks and adjustments are completed. The difference between the channels must not exceed ±2 dB as indicated on the Test-Set. Adjust VR-451/452 (L-ch/R-ch) for identical level.

BIAS TRAP ADJUSTMENT

NOTE: The bias trap tank circuit keeps the bias signal from reaching the record and monitor amplifier and under normal "no signal" conditions, voltage should not be present at the OUTPUT jacks.

1. Place MONITOR switch SOURCE position, BIAS switch HIGH, and RECORD MODE switch to "ON". Place control switches for the REC "PAUSE" mode.
2. Connect a VTVM or oscilloscope across the RECORD PC Board Test point and ground.
3. Adjust L-503/504 for minimum reading, using non-inductive driver.
4. Change the MONITOR switch to TAPE position.
5. Adjust L-651/652 for minimum bias leakage reading at the OUTPUT jacks. spec. -40 dB or less

   NOTE: This procedure is simplified using the PC Board Extender board (foil side).

BIAS ADJUSTMENT

NOTE: Adjust bias traps (above) before proceeding. The following adjustments are made only at 9.5 cm·3-3/4 Tape speed. The bias oscillator frequency is 100 kHz (±5 kHz).

1. Thread record Test Tape YTT-8003 or equivalent tape on the unit.
2. Place RECORD BIAS switch HIGH, EQ switch HIGH position.
3. Place MONITOR switch in the TAPE position.
4. Apply 7 kHz signals at -18 dB to the LINE IN jacks.
5. Adjust capacitor VC-551/552 for a peak on the Test-Set, then turn the capacitor clockwise until a decrease of 2.5 dB from the peak is obtained.

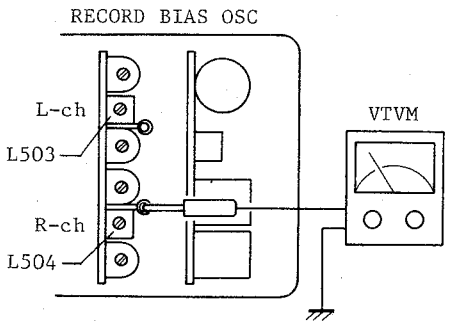

Fig. 12-3 Bias Trap Check Point

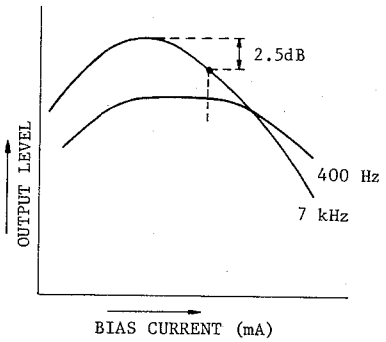

Fig. 12-4 Bias Limits Chart

RECORD LEVEL SET

NOTE: The OUTPUT control must be at the Specified Output Level position (-8 dB at OUTPUT jacks), and the LINE INPUT controls at the Specified Input Level Setting.

1. Thread a record Test Tape YTT-8003 or equivalent on the unit.
2. Apply a 400 Hz signal at -8 dB to the LINE IN jacks.
3. Place Tape SPEED switch to the 19 cm·7-1/2 position.
4. Place the MONITOR switch to TAPE, EQ/BIAS switch to HIGH position.
5. Adjust REC LEVEL VR-701/702 for -8 dB signal at OUTPUT jacks.
6. Check and obtain 0 VU ±1.0 VU reading in the VU meter (NORMAL, HIGH both).

OVERALL FREQUENCY RESPONSE (HIGH)

19cm·7-1/2 speed:

7. Apply signals swept from 40 Hz∿24 kHz at -28 dB to LINE IN jacks and record them.
8. Adjust VR-501/502 for best response.
9. Place the Tape SPEED switch to the 9.5 cm·3-3/4 position.
10. Apply signals swept from 40 Hz∿15 kHz at -28 dB to the deck INPUT jacks.
11. Adjust VR-503/504 as in 19 cm·7-1/2 speed.

OVERALL FREQUENCY RESPONSE (NORMAL)

19 cm·7-1/2 speed:

12. Apply signals swept from 40 Hz∿22 kHz at -28 dB to LINE IN jacks and record.
13. Adjust VR-551 for best response (L-ch, R-ch both).
14. Change the Tape SPEED switch to the 9.5 cm·3-3/4 position.
15. Apply signals swept from 40 Hz∿13 kHz at -28 dB.
16. Check for overall frequency response.
    No further adjustment is provided.

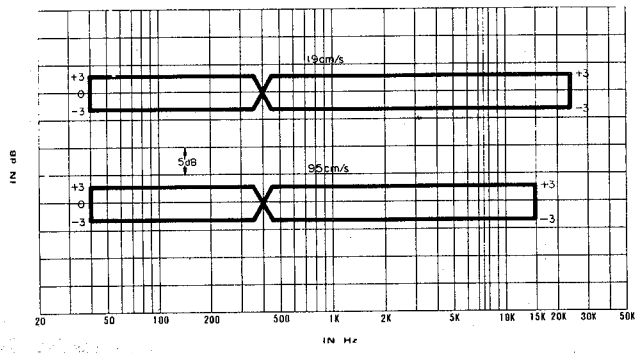

Fig. 12-5 Frequency Response Limits -RECORD-

MONOPHONIC RECORDING

1. Place the RECORD MODE switch L (or R, not both) to the "ON" and R (or L) to the OFF position.
2. Apply signals swept from 40 Hz∿24 kHz at -28 dB to LINE IN jacks and record (YTT-8003 or equivalent).
3. If necessary, adjust L-552 (on the BIAS OSC PC Board) for best response.

ERASE EFFICIENCY CHECK

NOTE: To measure erase efficiency, a 1 kHz Band Pass Filter (TEAC M-206A) must be used.

1. Thread blank YTT-8003 or equivalent tape on the unit.
2. Apply a 1 kHz signal at 0 dB to the LINE IN jacks.
3. Place unit in the RECORD mode and record this signal.
4. Rewind the recording to the beginning and remove the AF oscillator from the LINE IN jacks.
5. Connect a Test-Set (M-826A) to the OUTPUT jack through the 1 kHz Band Pass Filter, select TAPE monitor.
6. Place unit in the RECORD MODE and "record" (erase) over this portion of tape. Monitor the tape output on the Test-Set.
7. The Test-Set should indicate -68 dB or less.

LEVEL DEVIATION [RECORD-PLAYBACK]

1. Thread a reel of blank high output tape and select 7-1/2ips (19 cm/s).
2. Record a variety of frequencies, such as 400 Hz, 2 kHz, 5 kHz, 8 kHz, 10 kHz, etc., at the specified input setting with the RECORD BIAS switch to HIGH position. Record approximately 10 seconds of each frequency.
3. During playback at 7-1/2ips the output level should not vary more than 0.5 dB at 400 Hz, 1 dB at 10 kHz.
   With the unit tape speed at 3-3/4ips (9.5 cm/s), the tolerances are the same as at 7-1/2ips.

13-1. TROUBLESHOOTING

The Guide below lists specific difficulties that could occur in the A-5500, A-5300. Several possible causes are listed for each malfunction. Visually inspect the unit for any damage such as broken or burned components or wiring, loose connections, etc. To avoid or eliminate many possible problems, follow the procedures in the SERVICING AND MAINTENANCE section.

Do not attempt service repairs beyond your ability. TEAC's regional Factory Authorized Service Centers, distributors, or Factory Service may be needed for extensive or complicated problems.

MALFUNCTION	POSSIBLE SOURCE OF TROUBLE	CORRECTIVE PROCEDURE
Pilot lamps (VU) do not illuminate when power is applied	a. Fuse (2A) burned out (blown) b. 3P red connector loose (rear of deck)	a. Replace fuse b. Check wiring from power cord to transport
Capstan will not rotate	a. 12P connector (J-152, P-152) loose b. Incorrect voltage on Stabilizer PC Board c. Defective motor assy	a. Correct connection b. Check, adj. for +24 VDC (See schematic) c. Replace motor or repair motor assy PC Board
Pinch-roller fails to engage completely	a. Right tension-arm shut-off switch b. Faulty solenoid drive unit c. High level signal (Specified on schematic) not present on the Control unit J41 pin #9	a. Check arm position, switch condition b. Transistor Q121, Q122, Q123, associated parts c. Replace Control unit. Refer to Time chart Check correct +5 VDC at pin #13 on Control unit. If not present, check for 5 volt output from Stabilizer PC Board
Right OR Left Reel does not rotate	a. Drive belt off or slipping b. Defective Reel Motor drive unit c. Brakes not disengaged d. Specified high-level signal not present on pin #12 J41 of the Control unit	a. Re-position or clean b. Replace transistor Q86 (right) or Q78 (left) c. Replace transistors Q127, Q128, 129 on Solenoid Drive unit. d. Repair/replace Control unit

cont'd next page--------

13-2. TROUBLESHOOTING

MALFUNCTION	POSSIBLE SOURCE OF TROUBLE	CORRECTIVE PROCEDURE
Both Reel motors inop.	a. Specified +5 VDC not present at pin #1 on the Drive unit b. Brakes not disengaged c. Specified voltage of 22 VDC not present at either motor terminal	a. Check Drive unit; check F3 (1A fuse) in Rectifier circuit b. Transistor Q134 on Right Reel Assy. c. GRN wire at Power Trans disconnected.
Inoperative in FWD play	a. Pinch-roller does not engage with capstan b. Brakes not disengaged	a. 1) Defective transistors Q121, Q122, Q123, Q124, Q125 or Q126; 2) Control Unit defective if specified High Level signal not present at J41 pins #9 and #11 b. Transistor Q134 on Right Reel assy.
Inoperative in REV play	a. Reverse relay K901/ K902 not engaging b. Defective Capstan Servo assy c. Specified High Level signal of Control unit	a. Check transistor Q130 b. Repair/replace c. Defective Control unit
Fast Forward or Rewind modes inoperative	a. Defective Reel Drive b. Specified High Level signal not present at J41 pins #7 or #8 of the Control unit	a. Check transistors Q71, Q72, Q75, Q76, Q80, Q83, Q84, associated parts b. Replace/repair defective Control unit
Playback audio intermittent or absent	a. Muting Circuit on the Playback EQ PC Bd is activated by malfunction b. Specified voltage of 24 VDC not present at Stabilizer unit pins 5 or 6 c. Specified voltage of 34 VDC unit, pins 3 or 4 d. Specified signal not present at the Play Ampl PC Bd, pins 1, 14 e. Specified signal not present at Play Ampl PC Bd pins 4, 11 f. MONITOR switch at SOURCE or defective	a. Defective transistors Q207 or Q209; DZ201; or associated parts b. Defective transistors Q401, Q402 or associated parts c. Rectifier circuit fuse (2A) burned out d. Repair EQ PC Bd or Replace e. Repair or replace Play Ampl PC Bd f. Place at TAPE, repair or replace

13-3. TROUBLESHOOTING

MALFUNCTION	POSSIBLE SOURCE OF TROUBLE	CORRECTIVE PROCEDURE
Will not record	a. Specified signal not present at Mixing Ampl. PC Bd, Pins 3,12 b. Muting circuit on the Record Ampl. PC Bd activated by malfunction	a. Isolate, repair defective components by signal trace to this point b. Defective Q507, Q508, Q509, DZ501, or associated parts
Will not erase	a. Bias Oscillator circuit relay K551 not activated b. Specified High Level not present on Control Drive unit J41 pin #2 c. Correct voltage of 23V at transistors Q551 and Q552 but no oscillations d. Erase head defective or disconnected	a. Transistor Q553 or relay K551 defective b. Repair defective circuit c. Replace transistors Q551 and Q552 as a pair d. Check connections, replace
Auto-reverse or Auto-repeat does not function with sensing tape	Mis-positioning between the sensing post and leaf switch	Adjust the leaf switch
MPX FILTER not effective	a. Faulty switch b. Defective parts on Dolby Encoder PC Bd	a. Replace SW814-1 b. Check/replace coils L301, L302, or capacitors C302, C303, or C304
PAUSE button not functioning	Control Drive unit defective	Repair/replace Control Drive

READING FOR COLOR CODE-RESISTOR-

Color	BLK	BRN	RED	ORG	YEL	GRN	BLU	VIO	GRY	WHT	GOL	SIL	Plain
BAND No.1	0	1	2	3	4	5	6	7	8	9			
No.2	0	1	2	3	4	5	6	7	8	9			
No.3	10^0	10^1	10^2	10^3	10^4	10^5	10^6	10^7	10^8	10^9	10^{-1}	10^{-2}	
No.4	(Tolerance)										5%	10%	20%

Example: No.1 BRN 1
No.2 BLK 0
No.3 GRN 10^5
No.4 GOL ±5% Follow: Reading 1MΩ ±5%

14. INTERFACE CIRCUITS -LOGIC-

Type number (7400) QUAD 2-INPUT POSITIVE NAND GATE

SYMBOL	LOGIC AND CONNECTION DIAGRAM	SCHEMATIC DIAGRAM (EACH GATE)	FUNCTION TABLE
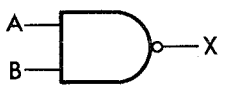 Positive logic $X=\overline{A \cdot B}$	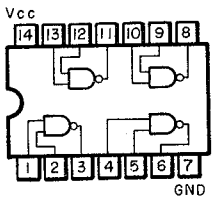 TOP VIEW	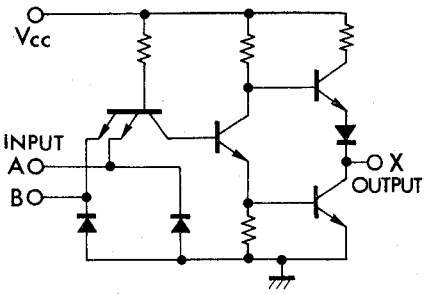	

INPUTS		OUTPUT
A	B	X
L	L	H
L	H	H
H	L	H
H	H	L

Type number (7410) TRIPLE 3-INPUT POSITIVE NAND GATE

SYMBOL	LOGIC AND CONNECTION DIAGRAM	SCHEMATIC DIAGRAM (EACH GATE)	FUNCTION TABLE
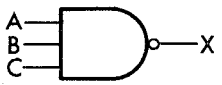 Positive logic $X=\overline{A \cdot B \cdot C}$	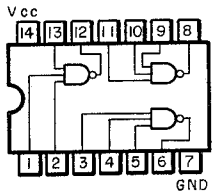 TOP VIEW	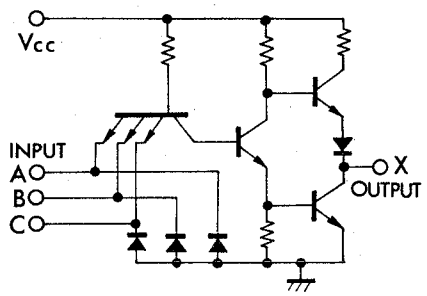	

INPUTS			OUTPUT
A	B	C	X
H	H	H	L
H	H	L	H
H	L	H	H
H	L	L	H
L	H	H	H
L	H	L	H
L	L	H	H
L	L	L	H

Type number (7402) QUAD 2-INPUT POSITIVE NOR GATE

SYMBOL	LOGIC AND CONNECTION DIAGRAM	SCHEMATIC DIAGRAM (EACH GATE)	FUNCTION TABLE
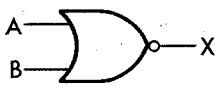 Positive logic $X=\overline{A+B}$	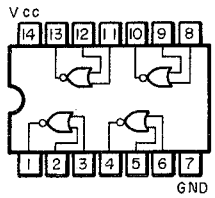 TOP VIEW	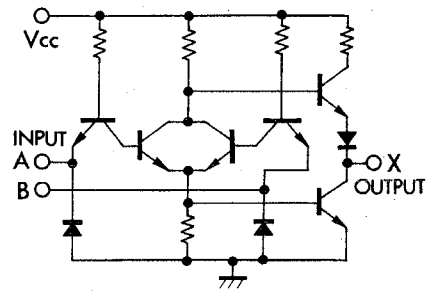	

INPUTS		OUTPUT
A	B	X
L	L	H
L	H	L
H	L	L
H	H	L

H: HIGH

L: LOW

CONTROL UNIT SCHEMATIC DIAGRAM

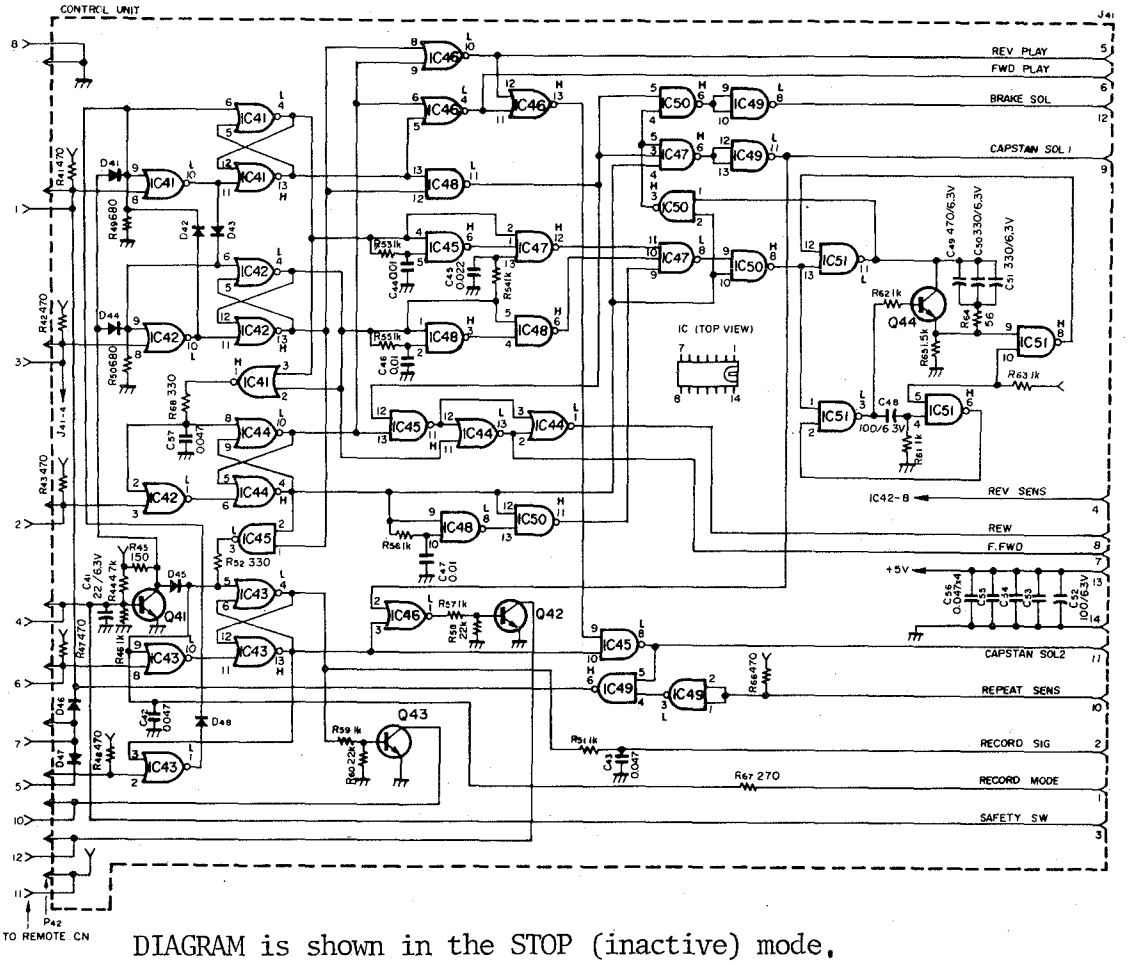

DIAGRAM is shown in the STOP (inactive) mode.
For Control unit troubleshooting, check each IC gate for HIGH or LOW Level as indicated in the Timing sequence chart on the next page.

TIMER CONTROL SCHEMATIC RC-350

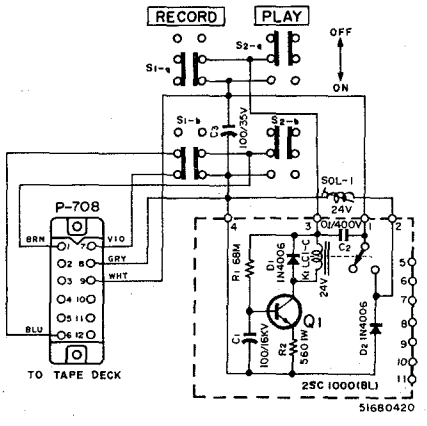

REMOTE CONTROL SCHEMATIC RC-150

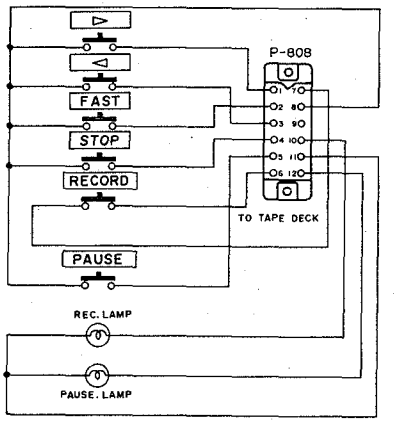

15-1. TIMING SEQUENCE CHART

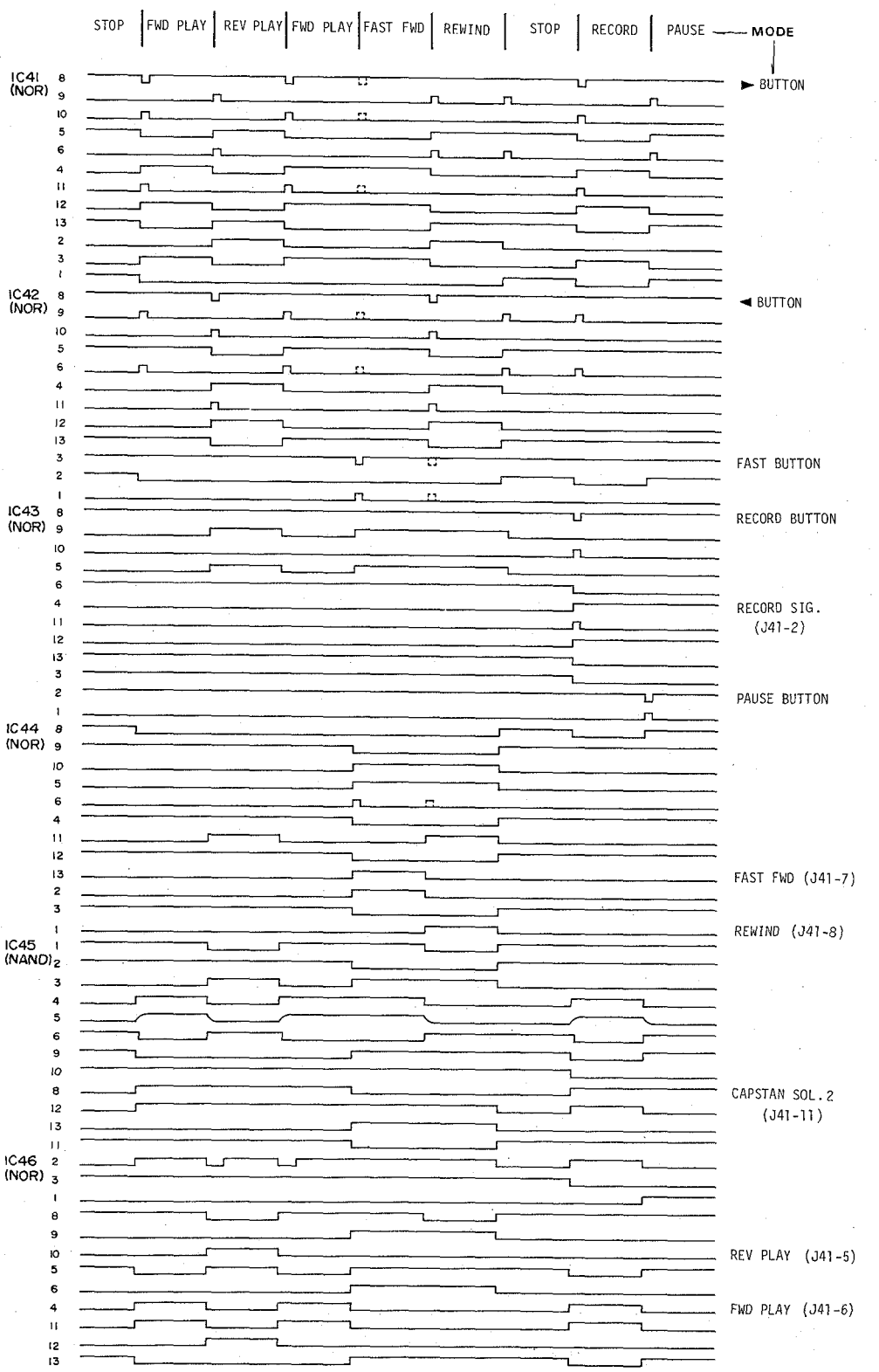

15-2. TIMING SEQUENCE CHART

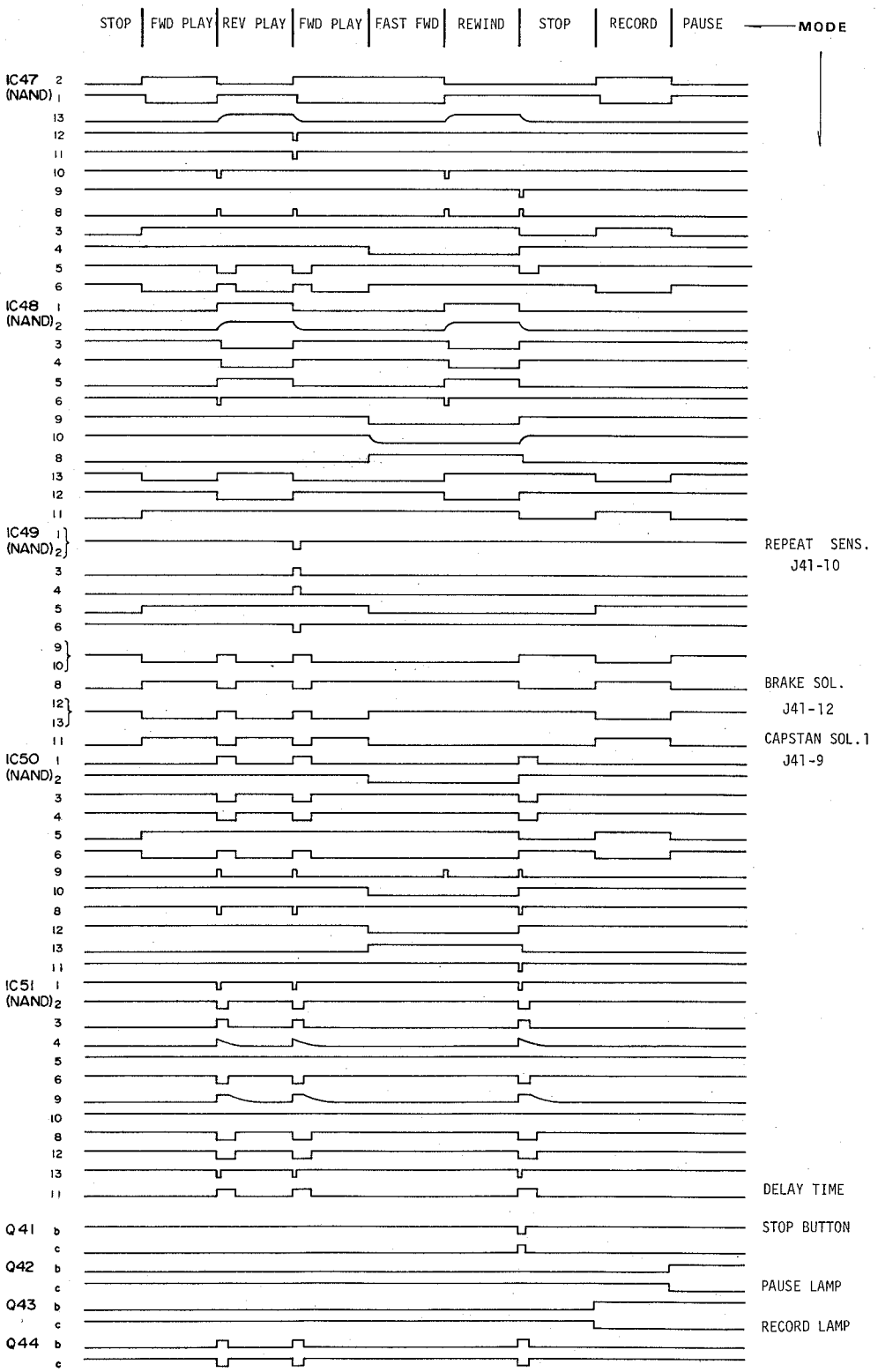

16. LIST OF LINE VOLTAGE AND CYCLE (Hz) USED AROUND THE WORLD

Name of the country	Cycle (Hz)	Voltage	Name of the country	Cycle (Hz)	Voltage
Argentina	50	220	Guatemala	60	120,(220)
Algeria	50	127,220	Germany	50	110,120,127,220
Austria	50	230,240	Hungary	50	220
Australia	50	220	Honduras	60	110
Brazil	50/60	110,115,125,227, 220	Haiti	(50)/60	115,(220)
			Iran	50	220
Belgium	50	110,127,220	Iraq	50	220
Burma	50	230	India	50	230
Canada	60	110,115,120	Indonesia	50	110,117
Cuba	60	110	Israel	50	230
Costa Rica	60	120	Italy	50	110,(120),(127) (150),(160),220
Colombia	60	110,(115),(120)			
Chile	50/(60)	(110),220	Jamaica	50	110
Czechoslovakia	50	220	Japan	50/60	100
Denmark	50	220	Korea	60	100
Dominica	60	110	Kenya	50	240
England	50	(200),(210),(230), 240	Lebanon	50	110,220
			Luxembourg	50	110,220
Ecuador	60	(110),120,127	Malaya	50	230
El Salvador	60	110	Mexico	50/60	120,127
Egypt	50	110,220	Monaco	50	220
Formosa	60	110	Morocco	50	115,127,220
Finland	50	220	Netherland	50	127,220
France	50	110,(115),(120), (127),220	Nigeria	50	230
			Nicaragua	60	120

Name of the country	Cycle (Hz)	Voltage
New Zealand	50	230
Norway	50	220
Okinawa	60	100
Pakistan	50	220,230
Panama	60	110,(115),(120)
Philippines	60	110,(220)
Peru	(50)/60	(110),200
Portugal	50	120,220
Poland	50	220
China	50/60	110,220
Rep.of Vietnam	50	120,127
Rumania	50	(110),220
Saudi Arabia	50/60	120,230
Sierra Leone	50	230
Syria	50	115,200
Switzerland	50	220
Sweden	50	(117),220
Spain	50	120,127
Soviet Union	50	127
Thailand	50	220
Tunisia	50	110,115,220
Turkey	50	110,220
U.S.A.	60	115,120
Uruguay	50	220
Venezuela	(50)/60	120
Yugoslavia	50	220

17. TEAC DECIBEL TABLE

1	.775	0 db	1	.775	0 db	1	.775	0db	1	.775	0 db	1	.775	0 db	1	.775	0 db	1	.775	0 db	1	179.	126.	89.4	63.2
																			600Ω			32Ω	16Ω	8Ω	4Ω
.944	.730	120.5	9.44	7.30	100.5	94.4	73.0	80.5	944	730	60.5	9.44	7.30	40.5	94.4	73.0	20.5	.944	.730	0.5	.891	169	119	83.9	59.6
.891	.690	121	8.91	6.90	101	89.1	69.0	81	891	690	61	8.91	6.90	41	89.1	69.0	21	.891	.690	1	.794	159	112	79.3	56.3
.841	.651	121.5	8.41	6.51	101.5	84.1	65.1	81.5	841	651	61.5	8.41	6.51	41.5	84.1	65.1	21.5	.841	.651	1.5	.708	150	106	74.9	53.1
.794	.615	122	7.94	6.15	102	79.4	61.5	82	794	615	62	7.94	6.15	42	79.4	61.5	22	.794	.615	2	.631	142	100	70.7	50.2
.750	.580	122.5	7.50	5.80	102.5	75.0	58.0	82.5	750	580	62.5	7.50	5.80	42.5	75.0	58.0	22.5	.750	.580	2.5	.562	134	94.5	66.7	47.3
.707	.548	123	7.07	5.48	103	70.7	54.8	83	707	548	63	7.07	5.48	43	70.7	54.8	23	.707	.548	3	.501	126	89.3	63.0	44.7
.668	.517	123.5	6.68	5.17	103.5	66.8	51.7	83.5	668	517	63.5	6.68	5.17	43.5	66.8	51.7	23.5	.668	.517	3.5	.447	119	84.3	59.4	42.2
.630	.488	124	6.30	4.88	104	63.0	48.8	84	630	488	64	6.30	4.88	44	63.0	48.8	24	.530	.488	4	.398	113	79.5	56.1	39.8
.596	.461	124.5	5.96	4.61	104.5	59.6	46.1	84.5	596	461	64.5	5.96	4.61	44.5	59.6	46.1	24.5	.596	.461	4.5	.355	106	75.1	53.0	37.6
.562	.435	125	5.62	4.35	105	56.2	43.5	85	562	435	65	5.62	4.35	45	56.2	43.5	25	.562	.435	5	.316	100	70.9	50.0	35.5
.531	.411	125.5	5.31	4.11	105.5	53.1	41.1	85.5	531	411	65.5	5.31	4.11	45.5	53.1	41.1	25.5	.531	.411	5.5	.282	94.9	67.0	47.3	33.5
.501	.388	126	5.01	3.88	106	50.1	38.8	86	501	388	66	5.01	3.88	46	50.1	38.8	26	.501	.388	6	.251	89.6	63.2	44.6	31.7
.473	.366	126.5	4.73	3.66	106.5	47.3	36.6	86.5	473	366	66.5	4.73	3.66	46.5	47.3	36.6	26.5	.473	.366	6.5	.224	84.5	59.6	42.1	29.9
.446	.345	127	4.46	3.45	107	44.6	34.5	87	446	345	67	4.46	3.45	47	44.6	34.5	27	.446	.345	7	.199	79.7	56.2	39.7	28.1
.422	.326	127.5	4.22	3.26	107.5	42.2	32.6	87.5	422	326	67.5	4.22	3.26	47.5	42.2	32.6	27.5	.422	.326	7.5	.178	75.3	53.1	37.5	26.6
.398	.308	128	3.98	3.08	108	39.8	30.8	88	398	308	68	3.98	3.08	48	39.8	30.8	28	.398	.308	8	.158	71.1	50.2	35.4	25.1
.376	.290	128.5	3.76	2.90	108.5	37.6	29.0	88.5	376	290	68.5	3.76	2.90	48.5	37.6	29.0	28.5	.376	.290	8.5	.141	67.0	47.3	33.3	23.7
.354	.274	129	3.54	2.74	109	35.4	27.4	89	354	274	69	3.54	2.74	49	35.4	27.4	29	.354	.274	9	.125	63.3	44.7	31.5	22.3
.335	.259	129.5	3.35	2.59	109.5	33.5	25.9	89.5	335	259	69.5	3.35	2.59	49.5	33.5	25.9	29.5	.335	.259	9.5	.112	59.8	42.2	29.8	21.1
.316	.244	130	3.16	2.44	110	31.6	24.4	90	316	244	70	3.16	2.44	50	31.6	24.4	30	.316	.244	10	.100	56.4	39.8	28.1	19.9
.298	.232	130.5	2.98	2.32	110.5	29.8	23.2	90.5	298	232	70.5	2.98	2.32	50.5	29.8	23.2	30.5	.298	.232	10.5	.0891	53.6	37.0	26.7	18.9
.281	.218	131	2.81	2.18	111	28.1	21.8	91	281	218	71	2.81	2.18	51	28.1	21.8	31	.281	.218	11	.0794	50.3	35.5	25.1	17.8
.265	.205	131.5	2.65	2.05	111.5	26.5	20.5	91.5	265	205	71.5	2.65	2.05	51.5	26.5	20.5	31.5	.265	.205	11.5	.0708	47.3	33.4	23.6	16.7
.251	.194	132	2.51	1.94	112	25.1	19.4	92	251	194	72	2.51	1.94	52	25.1	19.4	32	.251	.194	12	.0631	44.8	31.6	22.3	15.8
.237	.183	132.5	2.37	1.83	112.5	23.7	18.3	92.5	237	183	72.5	2.37	1.83	52.5	23.7	18.3	32.5	.237	.183	12.5	.0562	42.3	29.8	21.0	14.9
.223	.173	133	2.23	1.73	113	22.3	17.3	93	223	173	73	2.23	1.73	53	22.3	17.3	33	.223	.173	13	.0501	40.0	28.2	19.9	14.1
.211	.163	133.5	2.11	1.63	113.5	21.1	16.3	93.5	211	163	73.5	2.11	1.63	53.5	21.1	16.3	33.5	.211	.163	13.5	.0447	37.6	26.6	18.7	13.3
.199	.154	134	1.99	1.54	114	19.9	15.4	94	199	154	74	1.99	1.54	54	19.9	15.4	34	.199	.154	14	.0398	35.6	25.1	17.7	12.6
.188	.145	134.5	1.88	1.45	114.5	18.8	14.5	94.5	188	145	74.5	1.88	1.45	54.5	18.8	14.5	34.5	.188	.145	14.5	.0355	33.5	23.6	16.7	11.8
.177	.137	135	1.77	1.37	115	17.7	13.7	95	177	137	75	1.77	1.37	55	17.7	13.7	35	.177	.137	15	.0316	31.6	22.3	15.7	11.2
.168	.130	135.5	1.68	1.30	115.5	16.8	13.0	95.5	168	130	75.5	1.68	1.30	55.5	16.8	13.0	35.5	.168	.130	15.5	.0282	30.0	21.2	14.9	10.6
.158	.122	136	1.58	1.22	116	15.8	12.2	96	158	122	76	1.58	1.22	56	15.8	12.2	36	.158	.122	16	.0251	28.2	19.9	14.0	9.55
.150	.116	136.5	1.50	1.16	116.5	15.0	11.6	96.5	150	116	76.5	1.50	1.16	56.5	15.0	11.6	36.5	.150	.116	16.5	.0224	26.8	18.9	13.3	9.46
.141	.109	137	1.41	1.09	117	14.1	10.9	97	141	109	77	1.41	1.09	57	14.1	10.9	37	.141	.109	17	.0199	25.2	17.8	12.5	8.89
.133	.103	137.5	1.33	1.03	117.5	13.3	10.3	97.5	133	103	77.5	1.33	1.03	57.5	13.3	10.3	37.5	.133	.103	17.5	.0178	23.8	16.8	11.8	8.40
.125	.097	138	1.25	.975	118	12.5	9.75	98	125	97.5	78	1.25	975	58	12.5	9.75	38	.125	.097	18	.0158	22.4	15.8	11.1	7.91
.119	.092	138.5	1.19	.921	118.5	11.9	9.21	98.5	119	92.1	78.5	1.19	921	58.5	11.9	9.21	38.5	.119	.092	18.5	.0141	21.2	15.0	10.6	7.51
.112	.086	139	1.12	.869	119	11.2	8.69	99	112	86.9	79	1.12	899	59	11.2	8.69	39	.112	.086	19	.0125	19.9	14.0	9.89	7.02
.106	.082	139.5	1.06	.820	119.5	10.6	8.20	99.5	106	82.0	79.5	1.06	820	59.5	10.6	8.20	39.5	.106	.082	19.5	.0112	18.9	13.4	9.43	6.69
.100	.077	140	1.00	.774	120	10.0	7.74	100	100	77.4	80	1.00	774	60	10.0	7.74	40	.100	.077	20	.0100	17.8	12.5	8.85	6.28
μV	μV	−db	μV	μV	−db	μV	μV	−db	μV	μV	−db	mV	mV	−db	mV	mV	−db	V	V	−db	POWER RATIO	mV	mV	mV	mV

Relationship between decibels, currents, voltage and power ratios.

Decibel (Voltage)	Loss	Gain	Decibel (Power)	Decibel (Voltage)	Loss	Gain	Decibel (Power)	Decibel (Voltage)	Loss	Gain	Decibel (Power)	Decibel (Voltage)	Loss	Gain	Decibel (Power)	Decibel (Voltage)	Loss	Gain	Decibel (Power)
.0	1.0000	1.000	.0	4.0	.6310	1.555	2.00	8.0	.3981	2.512	4.00	12.0	.2512	3.981	6.00	16.0	.1585	6.310	8.00
.1	.9886	1.012	.05	.1	.6237	1.603	.05	.1	.3936	2.541	.05	.1	.2483	4.027	.05	.1	.1567	6.383	.05
.2	.9772	1.023	.10	.2	.6166	1.622	.10	.2	.3890	2.570	.10	.2	.2455	4.074	.10	.2	.1549	6.457	.10
.3	.9661	1.035	.15	.3	.6095	1.641	.15	.3	.3846	2.600	.15	.3	.2427	4.121	.15	.3	.1531	6.531	.15
.4	.9550	1.047	.20	.4	.6026	1.660	.20	.4	.3802	2.630	.20	.4	.2399	4.169	.20	.4	.1514	6.607	.20
.5	.9441	1.059	.25	.5	.5957	1.679	.25	.5	.3758	2.661	.25	.5	.2371	4.217	.25	.5	.1496	6.683	.25
.6	.9333	1.072	.30	.6	.5888	1.698	.30	.6	.3715	2.692	.30	.6	.2344	4.266	.30	.6	.1479	6.761	.30
.7	.9226	1.084	.35	.7	.5821	1.718	.35	.7	.3673	2.723	.35	.7	.2317	4.315	.35	.7	.1462	6.839	.35
.8	.9120	1.096	.40	.8	.5754	1.738	.40	.8	.3631	2.754	.40	.8	.2291	4.365	.40	.8	.1445	6.918	.40
.9	.9016	1.109	.45	.9	.5679	1 758	.45	.9	.3589	2.786	.45	.9	.2265	4.416	.45	.9	.1429	6.998	.45
1.0	.8913	1.122	.50	5.0	.5623	1.778	.50	9.0	.3541	2.817	.50	13.0	.2239	4.467	.50	17.0	.1413	7.070	.50
.1	.8810	1.135	.55	.1	.5559	1.799	.55	.1	.3508	2.851	.55	.1	.2213	4.519	.55	.1	.1396	7.161	.55
.2	.8710	1.148	.60	.2	.5495	1.820	.60	.2	.3467	2.884	.60	.2	.2188	4.571	.60	.2	.1380	7.244	.60
.3	.8610	1.161	.65	.3	.5433	1.841	.65	.3	.3428	2.917	.65	.3	.2163	4.624	.65	.3	.1365	7.328	.65
.4	.8511	1.175	.70	.4	.5370	1.862	.70	.4	.3388	2.951	.70	.4	.2138	4.677	.70	.4	.1349	7.413	.70
.5	.8414	1.189	.75	.5	.5309	1.884	.75	.5	.3350	2.985	.75	.5	.2113	4.732	.75	.5	.1334	7.499	.75
.6	.8318	1.202	.80	.6	.5248	1.905	.80	.6	.3311	3.020	.80	.6	.2089	4.786	.80	.6	.1318	7.586	.80
.7	.8222	1.216	.85	.7	.5188	1.928	.85	.7	.3273	3.055	.85	.7	.2045	4.842	.85	.7	.1303	7.674	.85
.8	.8128	1.230	.90	.8	.5129	1.960	.90	.8	.3236	3.090	.90	.8	.2042	4.898	.90	.8	.1288	7.762	.90
.9	.8035	1.245	.95	.9	.5070	1.972	.95	.9	.3199	3.126	.95	.9	.2018	4.955	.95	.9	.1274	7.852	.95
2.0	.7943	1.259	1.00	6.0	.5012	1.995	3.00	10.0	.3162	3.162	5.00	14.0	.1995	5.012	7.00	18.0	.1259	7.943	9.00
.1	.7852	1.274	.05	.1	.4955	2.018	.05	.1	.3126	3.199	.05	.1	.1972	5.070	.05	.1	.1245	8.035	.05
.2	.7762	1.288	.10	.2	.4898	2.042	.10	.2	.3090	3.236	.10	.2	.1950	5.129	.10	.2	.1230	8.128	.10
.3	.7684	1.303	.15	.3	.4842	2.065	.15	.3	.3055	3.273	.15	.3	.1928	5.188	.15	.3	.1216	8.222	.15
.4	.7586	1.316	.20	.4	.4785	2.089	.20	.4	.3020	3.311	.20	.4	.1905	5.248	.20	.4	.1202	8.318	.20
.5	.7499	1.334	.25	.5	.4732	2.113	.25	.5	.2985	3.350	.25	.5	.1884	5.309	.25	.5	.1189	8.414	.25
.6	.7413	1.349	.30	.6	.4677	2.138	.30	.6	.2951	3.388	.30	.6	.1862	5.370	.30	.6	.1175	8.511	.30
.7	.7328	1.365	.35	.7	.4624	2.163	.35	.7	.2917	3.428	.35	.7	.1841	5.433	.35	.7	.1161	8.610	.35
.8	.7244	1.380	.40	.8	.4571	2.188	.40	.8	.2884	3.467	.40	.8	.1820	5.495	.40	.8	.1148	8.710	.40
.9	.7161	1.396	.45	.9	.4519	2.213	.45	.9	.2851	3.508	.45	.9	.1799	5.559	.45	.9	.1135	8.811	.45
3.0	.7073	1.413	.50	7.0	.4467	2.239	.50	11.0	.2818	3.548	.50	15.0	.1778	5.623	.50	19.0	.1122	8.913	.50
.1	.6998	1.429	.55	.1	.4416	2.265	.55	.1	.2786	3.589	.55	.1	.1758	5.689	.55	.1	.1109	9.016	.55
.2	.6918	1.445	.60	.2	.4365	2.291	.60	.2	.2754	3.631	.60	.2	.1738	5.754	.60	.2	.1096	9.120	.60
.3	.6839	1.462	.65	.3	.4315	2.317	.65	.3	.2723	3.673	.65	.3	.1718	5.821	.65	.3	.1084	9.226	.65
.4	.6761	1.479	.70	.4	.4266	2.344	.70	.4	.2692	3.715	.70	.4	.1698	5.888	.70	.4	.1072	9.333	.70
.5	.6683	1.496	.75	.5	.4217	2.371	.75	.5	.2661	3.756	.75	.5	.1679	5.957	.75	.5	.1059	9.441	.75
.6	.6607	1.514	.80	.6	.4169	2.399	.80	.6	.2630	3.802	.80	.6	.1660	6.026	.80	.6	.1047	9.550	.80
.7	.6531	1.531	.85	.7	.4121	2.427	.85	.7	.2600	3.846	.85	.7	.1641	6.095	.85	.7	.1035	9.661	.85
.8	.6457	1.549	.90	.8	.4074	2.455	.90	.8	.2570	3.890	.90	.8	.1622	6.166	.90	.8	.1023	9.772	.90
.9	.6383	1.567	.95	.9	.4027	2.483	.95	.9	.2541	3.936	.95	.9	.1603	6.237	.95	.9	.1012	9.886	.95

Decibel (Voltage)	Loss	Gain	Decibel (Power)
20.0	.1000	10.00	10.00
	Use the same numbers as 0-20 Db., but shift point one step to the left. Thus since 10 Db.=.3162 30 Db.=.03162	Use the same numbers as 0-20 Db., but shift point one step to the right. Thus since 10 Db.=3.162 30 Db.=31.62	This column repeats every 10 Db. instead of every 23 Db.

18-1. LEVEL DIAGRAM

PLAYBACK

A-5500

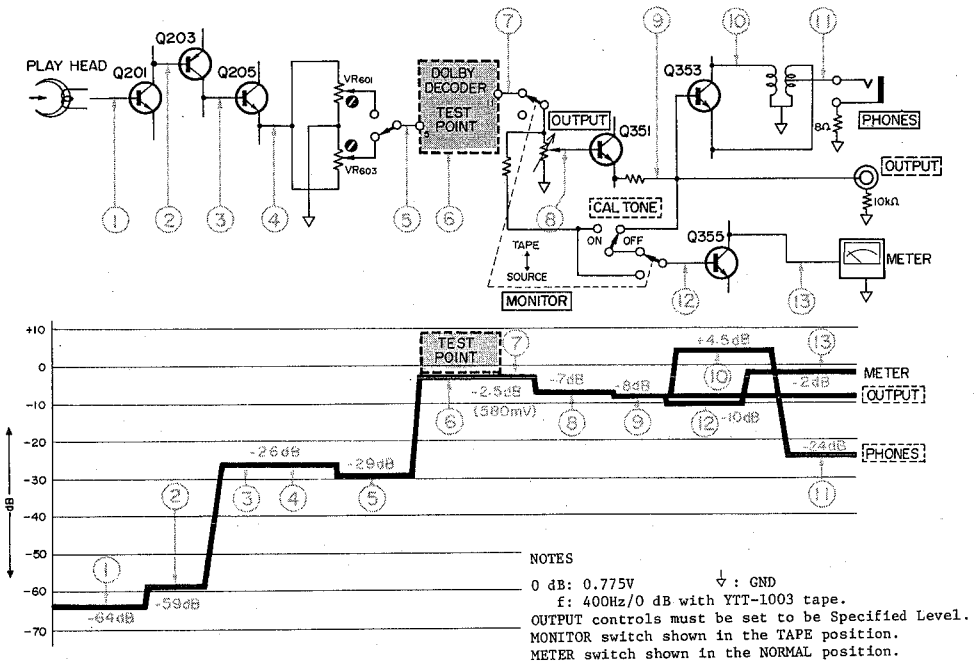

NOTES
0 dB: 0.775V ⏚: GND
f: 400Hz/0 dB with YTT-1003 tape.
OUTPUT controls must be set to be Specified Level.
MONITOR switch shown in the TAPE position.
METER switch shown in the NORMAL position.

A-5300

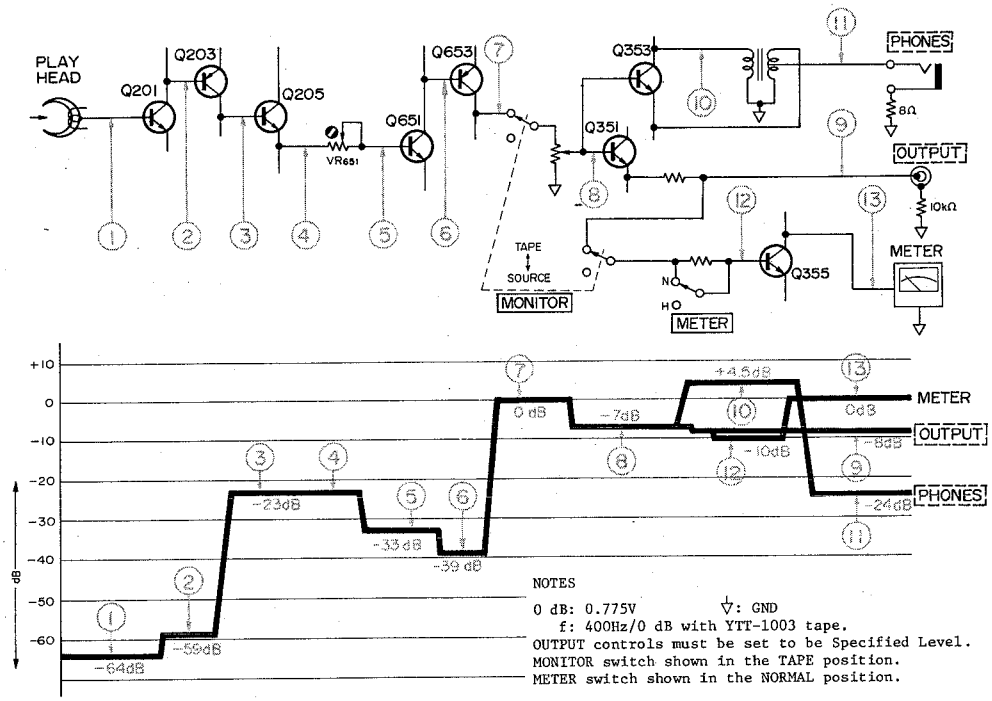

NOTES
0 dB: 0.775V ⏚: GND
f: 400Hz/0 dB with YTT-1003 tape.
OUTPUT controls must be set to be Specified Level.
MONITOR switch shown in the TAPE position.
METER switch shown in the NORMAL position.

18-2. LEVEL DIAGRAM

RECORD

A-5500

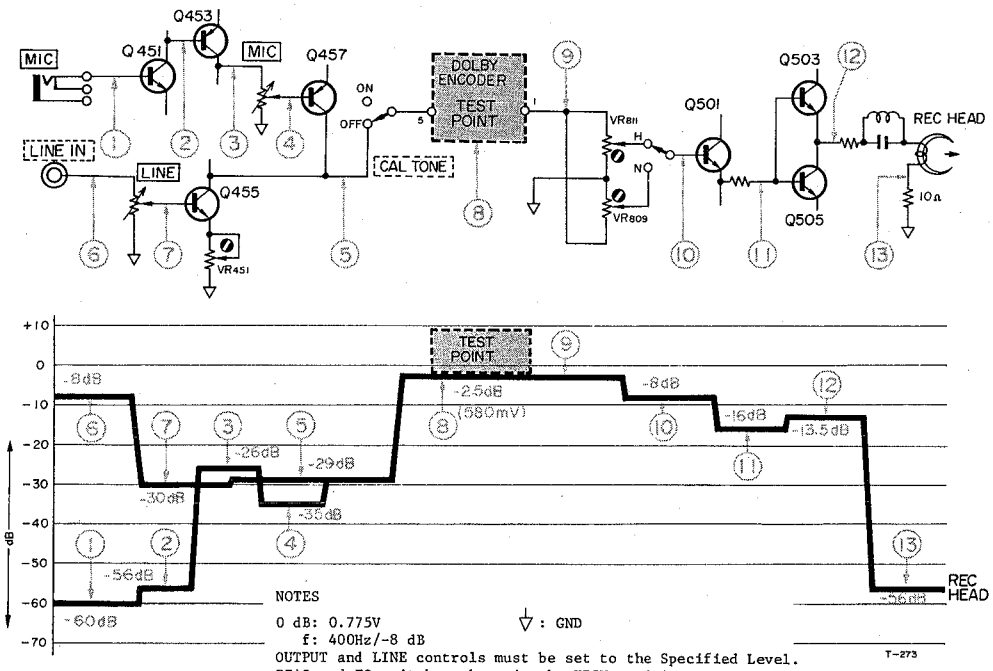

NOTES

0 dB: 0.775V ⏚ : GND
f: 400Hz/-8 dB
OUTPUT and LINE controls must be set to the Specified Level.
BIAS and EQ switches shown in the HIGH position.
METER switch shown in the NORMAL position.

A-5300

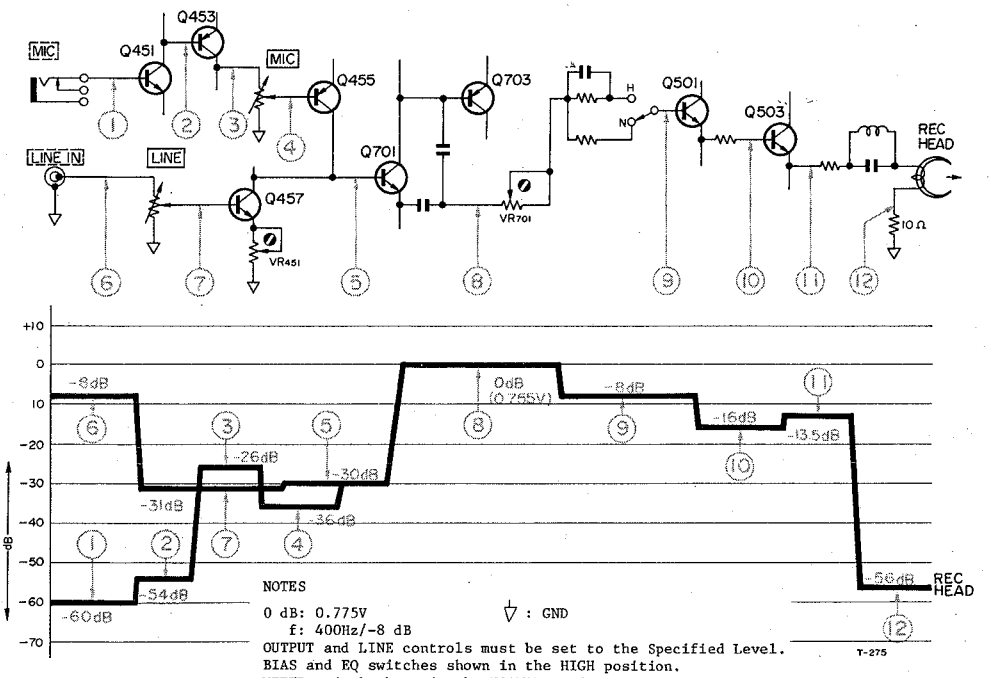

NOTES

0 dB: 0.775V ⏚ : GND
f: 400Hz/-8 dB
OUTPUT and LINE controls must be set to the Specified Level.
BIAS and EQ switches shown in the HIGH position.
METER switch shown in the NORMAL position.

19. PACKING FOR SHIPMENT

Keep this Carton Box and its packing materials. For shipping, re-pack as shown in the illustration.

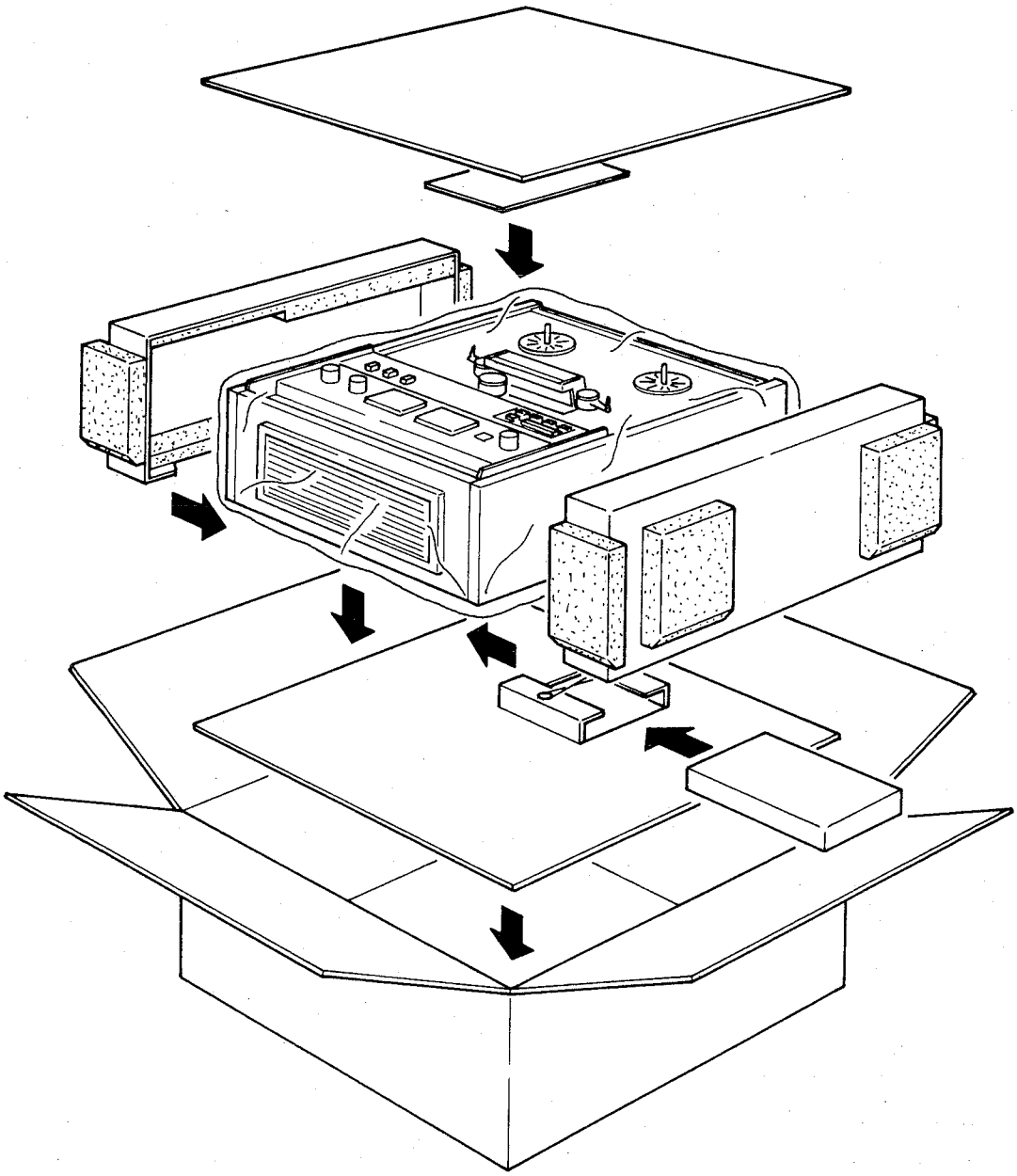

TEAC CORPORATION SALES OFFICE: SHINJUKU BLDG. 31 1-1 NISHISHINJUKU TOKYO PHONE: (03) [illegible]
TEAC CORPORATION OF AMERICA 7733 TELEGRAPH ROAD MONTEBELLO CALIFORNIA 90640 PHONE: (213) 726-0303
TEAC EUROPE B.V. KABELWEG 45-47 AMSTERDAM-W. 2 NETHERLANDS PHONE: 020-92160
TEAC HONGKONG LIMITED ROOM NO. 1105 MELBOURNE PLAZA 33 QUEEN'S ROAD C HONG KONG PHONE: [illegible]

92

TEAC®

A-5500/A-5300

4TRACK 2CHANNEL
STEREO TAPE DECKS

PARTS LIST

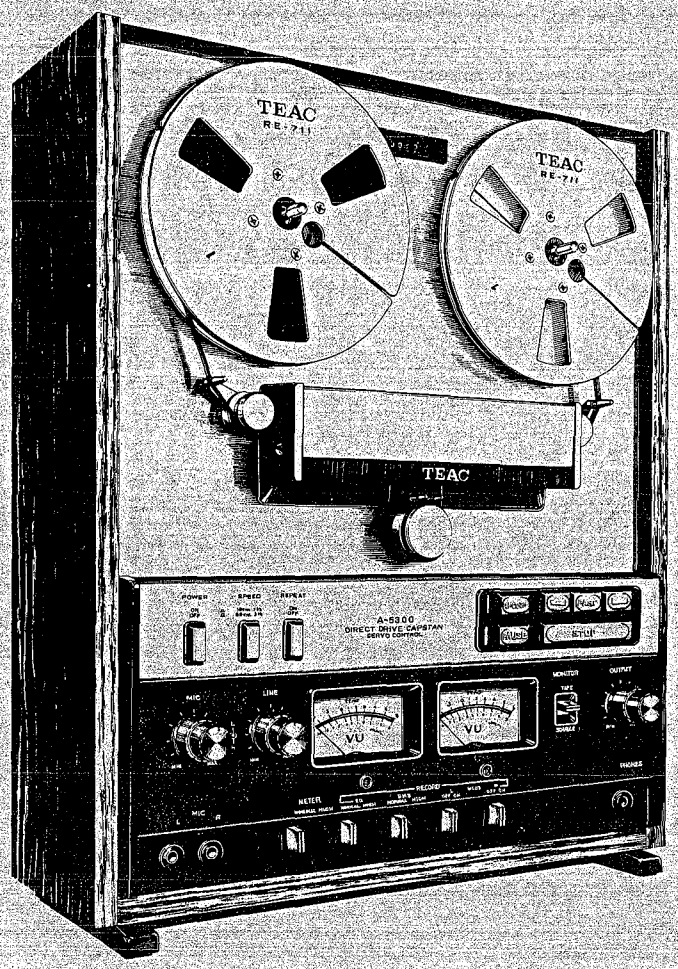

TEAC CORPORATION

Effective : March, 1974
Latest Revision No. : S-057

51031460

92

CONTENTS

		Application A-5300	Application A-5500	Page
PARTS ORDERING INFORMATION				4
HARDWARE NOMENCLATURE				5
PARTS LIST AND EXPLODED VIEWS				
1.	Cabinet Parts	○	○	6
2.	Transport Panel Assembly	○	○	8
3.	Head Assembly Group	○	○	10
4.	Tension/Shut-off Arm Group	○	○	12
5.	Reel Drive Assemblies	○	○	14
6.	Electrical & Drive Unit Group	○	○	16
7.	Mechanical & Supporting Group	○	○	18
8.	Capstan Drive Assembly	○	○	20
9.	Preamplifier, Front Section A	○		22
10.	PC Board Grouping A	○		24
11.	Rear Panel A	○		26
12.	Preamplifier, Front Section B		○	28
13.	PC Board Grouping B		○	30
14.	Rear Panel B		○	32
15.	Standard Accessories	○	○	34
ELECTRICAL PARTS LIST				
1.	Control Unit	○	○	36
2.	Sub Control Unit	○	○	36
3.	Reel Motor Drive Unit	○	○	37
4.	Solenoid Drive Unit	○	○	37
5.	Stabilizer Unit	○	○	38
6.	Rectifier Unit	○	○	38
7.	Play EQ Amp Unit	○	○	39
8.	Meter Phone Amp Unit	○	○	39
9.	Mic Mixing Amp Unit	○	○	40
10.	Record Amp Unit	○	○	40
11.	Bias Oscillator Unit	○	○	41
12.	Ampl. Stabilizer Unit	○	○	41
13.	Play Line Ampl. Unit	○		42
14.	Record Line Ampl. Unit	○		42
15.	Dolby Cal Unit		○	43
16.	Dolby Decoder Unit		○	44
17.	Dolby Encoder Unit		○	45
18.	Miscellaneous	○	○	46

PARTS ORDERING INFORMATION

Replacement parts are available through your nearest TEAC Authorized Service Center or directly from the TEAC office, the address of which is written on the back cover.
Changes are constantly being made to make TEAC products better and more reliable.
Therefore, when ordering parts, always include the following information:

1. MODEL	4. DESCRIPTION
2. FIG.REF.NO.	5. UNIT SERIAL NO.
3. TEAC PARTS NO.	6. MANUAL CODE NO.

NOTICE REGARDING PARTS ORDERS

1. The Schematic Diagram Circuit Reference Numbers should not be used for ordering parts. Use of those numbers will result in confusion and might bring you the wrong part. To insure the correct part from your order, always use the TEAC PARTS NUMBER and include all information as requested above.
2. To insure rapid parts identification and thus rapid delivery of the part you desire, always include the MANUAL CODE NUMBER with each part or group of parts from a specific manual. This Manual Code Number is printed on the lower right-hand corner of the Parts List Manual, front page.
3. In some instances, individual minor parts are not available. In such a case, the entire assembly including the part requested will be sent to you.

EXPLANATION OF MODEL VERSION CLASSIFICATION

The A-5300 Series decks are classified into versions as shown below.

A-5300 Model ----	A-5300•DM A-5300•EX 5300•TCA	A-5500 Model ----	A-5500•EX 5500•TCA

DM: For only domestic (Japan) market decks.

EX: For all export versions (except TCA or Japan).

TCA: For TCA (TEAC Corporation of America, U.S.A.)

A-5300: Applicable for the specified model only, but for any market if given in italics.

EX: Applicable for either model (A-5300 or A-5500), but only for the market specified in italic letters.

HARDWARE NOMENCLATURE

All screws conform to **ISO** standards, and have cross-recessed heads, unless otherwise noted.
ISO screws have the head inscribed with a point as in the figure to the right.

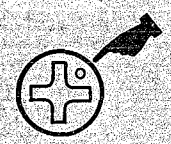

FOR EXAMPLE:

B 3x6

- 6 — Length in mm (L)
- 3 — *Diameter in mm (D)*
- B — Type of Head

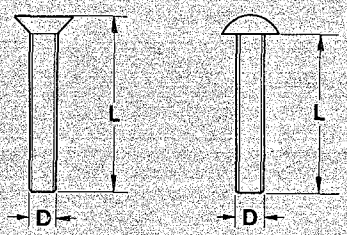

	Abbreviation	*Name*	*Type*
MACHINE SCREW	**R**	Round Head Screw	
	P	Pan Head Screw	
	T	Stove Head Screw (Truss)	
	B	Binding Head Screw	
	F	Flat Countersunk Head Screw	
	O	Oval Countersunk Head Screw	
WOOD SCREW	**RW**	Round Head Wood Screw	
	FW	Flat Countersunk Wood Screw	
	OW	Oval Countersunk Wood Screw	
SEMS SCREW	**BSA**	Binding Head SEMS Screw(A Type)	
	BSB	Binding Head SEMS Screw(B Type)	
	BSF	Binding Head SEMS Screw(F Type)	
	PSA	Pan Head SEMS Screw(A Type)	
	PSB	Pan Head SEMS Screw(B Type)	

	Abbreviation	*Name*	*Type*
TAPPING SCREW	**BTA**	Binding Head Tapping Screw(A Type)	
	BTB	Binding Head Tapping Screw(B Type)	
	RTA	Round Head Tapping Screw(A Type)	
	RTB	Round Head Tapping Screw(B Type)	
SETSCREW	**SF**	Hex Socket Setscrew(Flat Point)	
	SC	Hex Socket Setscrew(Cup Point)	
	SS	Slotted Socket Setscrew(Flat Point)	
WASHER	**E**	E-Ring (Retaining Washer)	
	W	Flat Washer (Plain)	
	SW	Lock Washer (Spring)	
	LWI	Lock Washer (Internal Teeth)	
	LWE	Lock Washer (External Teeth)	
	TW	Trim Washer (Countersunk)	
NUT	**N**	Hex Nut	

1. CABINET PARTS

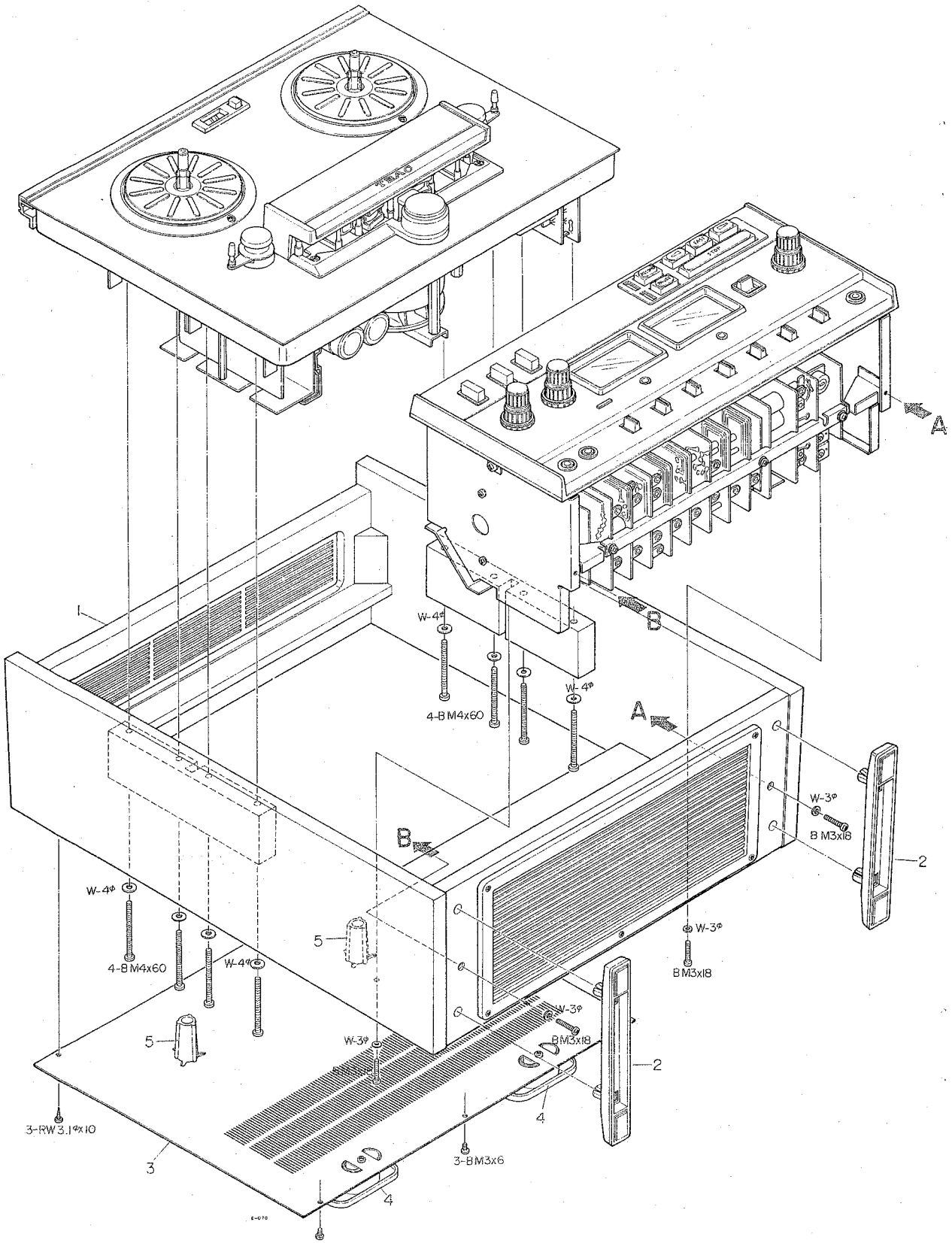

PARTS LIST-1

REF. NO.	TEAC PARTS NO.	DESCRIPTION	REVISION
1-1	55030011	Cabinet Assy	
1-2	55302380	Mtg Feet	
1-3	55001690	Cover, Rear	
1-4	55302440	Post, Cord Winding	
1-5	55302451	Guide, Access, Reel Hgt Adj	

2. TRANSPORT PANEL ASSEMBLY

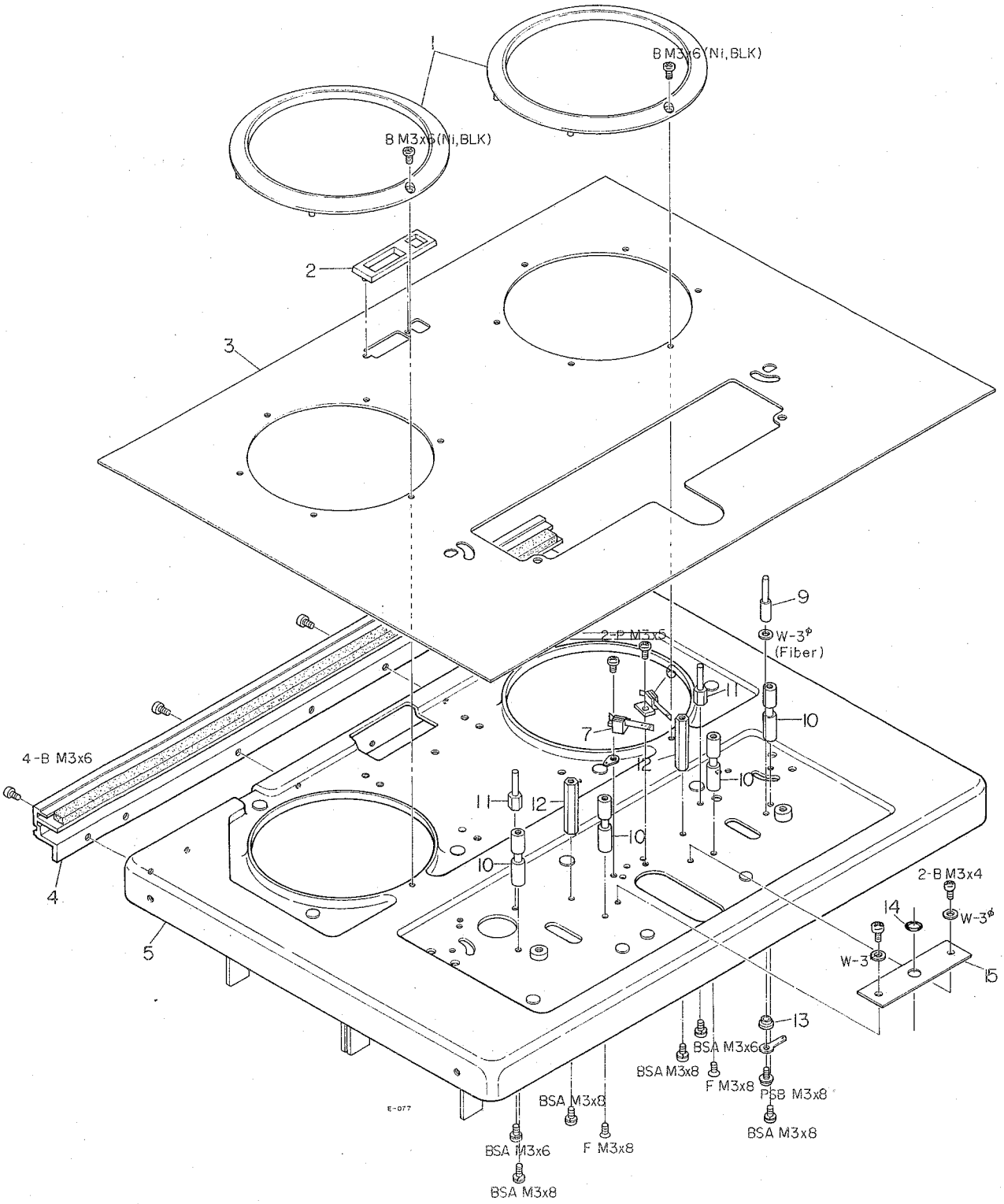

PARTS LIST-2

REF. NO.	TEAC PARTS NO.	DESCRIPTION	REVISION
2- 1	55302030	Protector, Reel	
2- 2	50277020	Cover, Counter	
2- 3	55503751	Trim Panel	
2- 4	55302370	Sash Assy, Top	
2- 5	55001531	Base Plate Assy	
2- 6	50447370	SW, Leaf; A (Right)	
2- 7	50447380	SW, Leaf; B (Left)	
2- 8		(not used)	
2- 9	55401920	Pin, Repeat Sensing	
2-10	55401790	Guide, Tape	
2-11	55401810	Standoff, Head Housing	
2-12	55401880	Standoff, Head Block	
2-13	55302420	Washer, Insul.	
2-14	55302500	"O" Ring, Gasket, 3ϕ	
2-15	55504710	Plate, Shield, Capstan	

3. HEAD ASSEMBLY GROUP

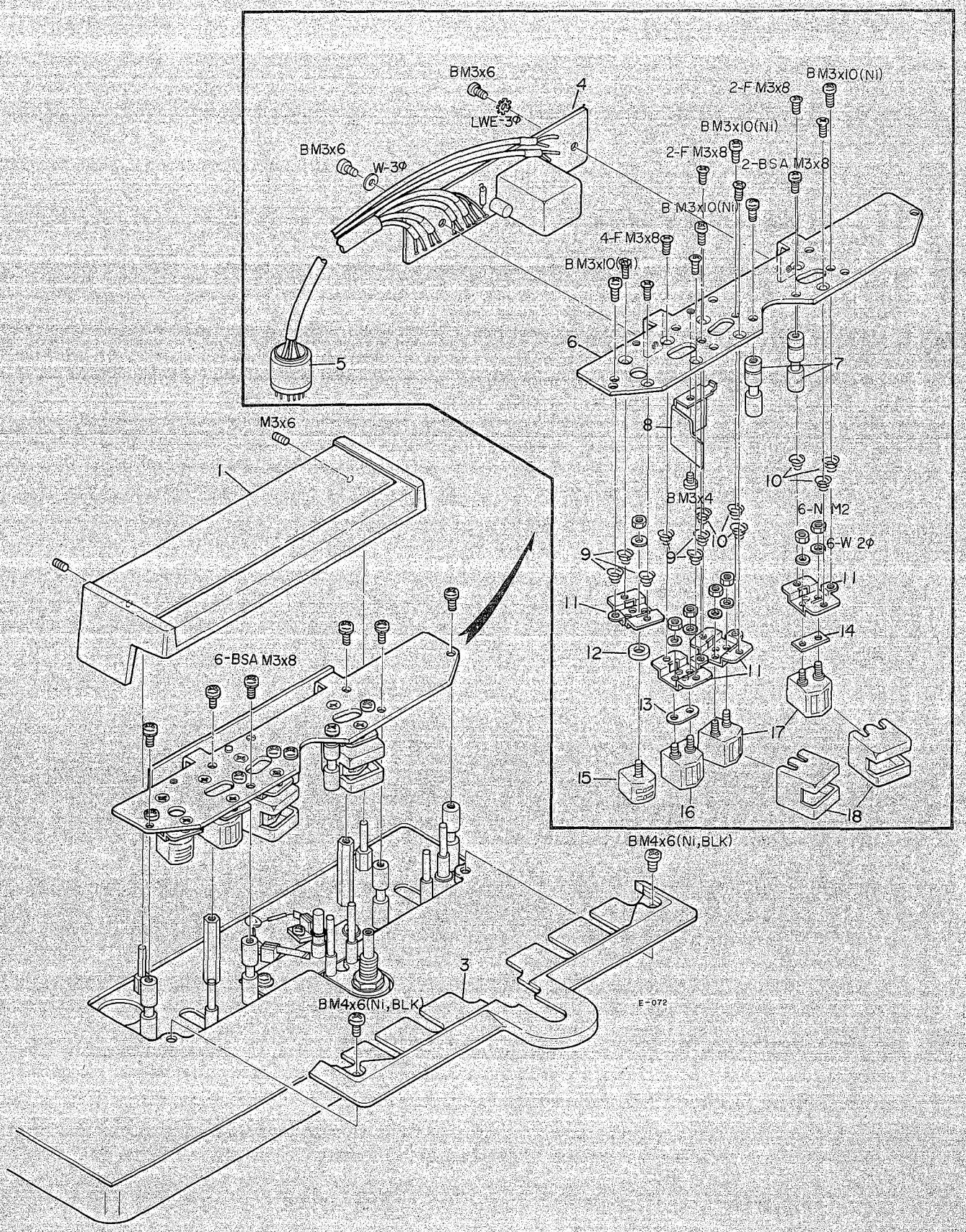

PARTS LIST-3

REF. NO.	TEAC PARTS NO.	DESCRIPTION	REVISION
3- 1	55902510	Head Housing Assy	
3- 2		(not used)	
3- 3	55302240	Trim Panel, Lower; Head Assy	
3- 4	51680360	PC Bd. Assy, Head	
3- 5	50432740	Plug, 9P (P807)	
3- 6	55504050	Plate, Head Base	
3- 7	55440130	Guide, Tape; A	
3- 8	55504060	Plate, Shield; Head	
3- 9	50220500	Spring, Head; B	
3-10	55201820	Spring, Head; D	
3-11	50134371	Plate, Head	
3-12	50136540	Spacer, Erase Head	
3-13	50134390	Spacer, Record Head	
3-14	55501521	Spacer, Head; B	
3-15	50663030	Head, Erase	
3-16	50664480	Head, Record (All but A-5500·EX)	
	50667250	Head, Record (A-5500·EX only)	
3-17	50664490	Head, Playback (All but A-5500·EX)	
	50667350	Head, Playback (A-5500·EX only)	
3-18	55504440	Head Shield	

4. TENSION/SHUT-OFF ARM GROUP

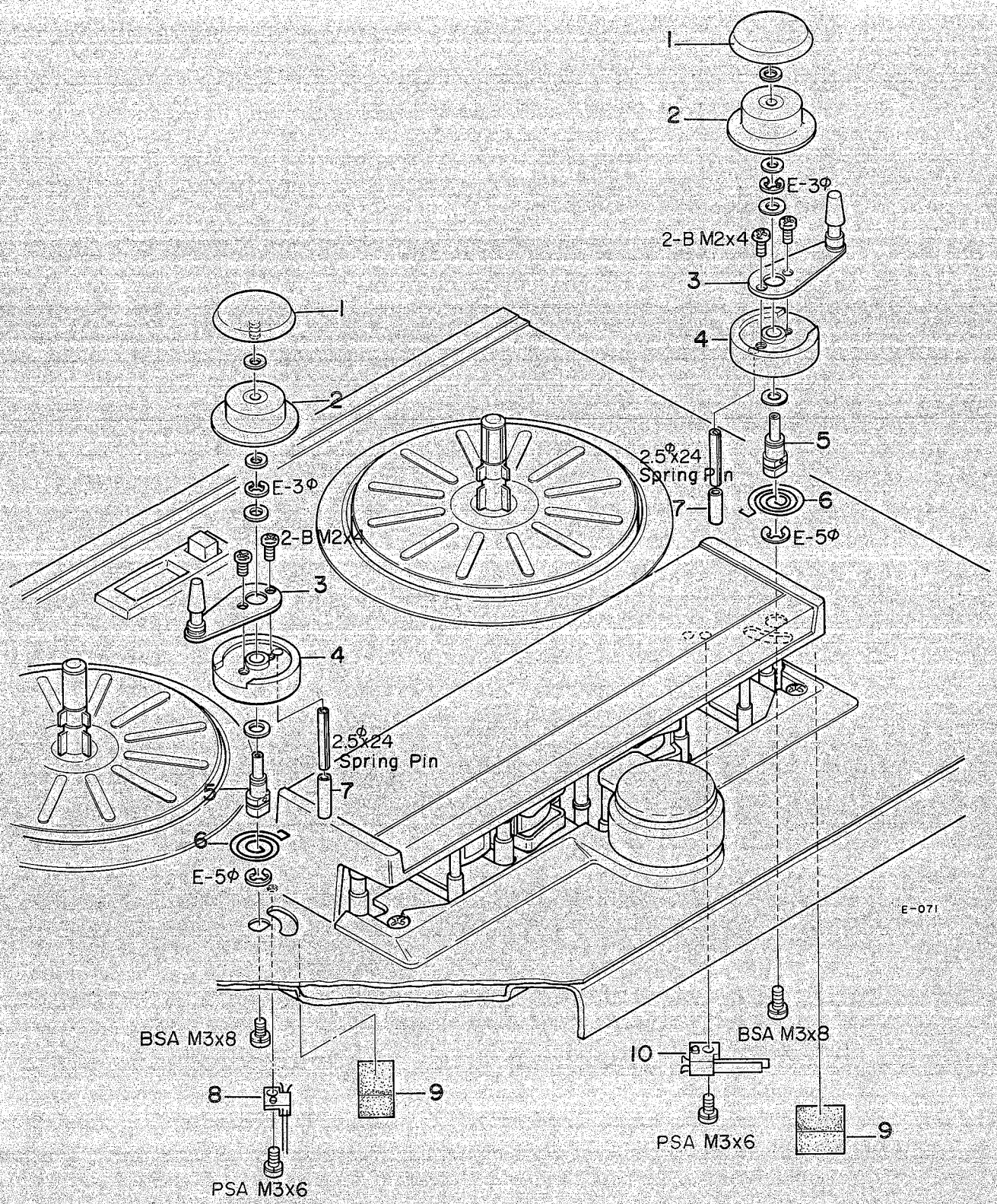

PARTS LIST-4

REF. NO.	TEAC PARTS NO.	DESCRIPTION	REVISION
4- 1	55402030	Cap, Tape Guide Roller	
4- 2	55001640	Roller Assy, Tape Guide	
4- 3	55001651	Tension Arm Assy	
4- 4	55302211	Collar, Tension Arm	
4- 5	55402061	Shaft, Tension Arm	
4- 6	55201791	Spring, Spiral	
4- 7	55302220	Collar, Rubber	
4- 8	50447370	SW, Leaf; A (SW2)	
4- 9	55504750	Cushion, Tension Arm	
4-10	50447380	SW, Leaf; B (SW3)	

5. REEL DRIVE ASSEMBLIES

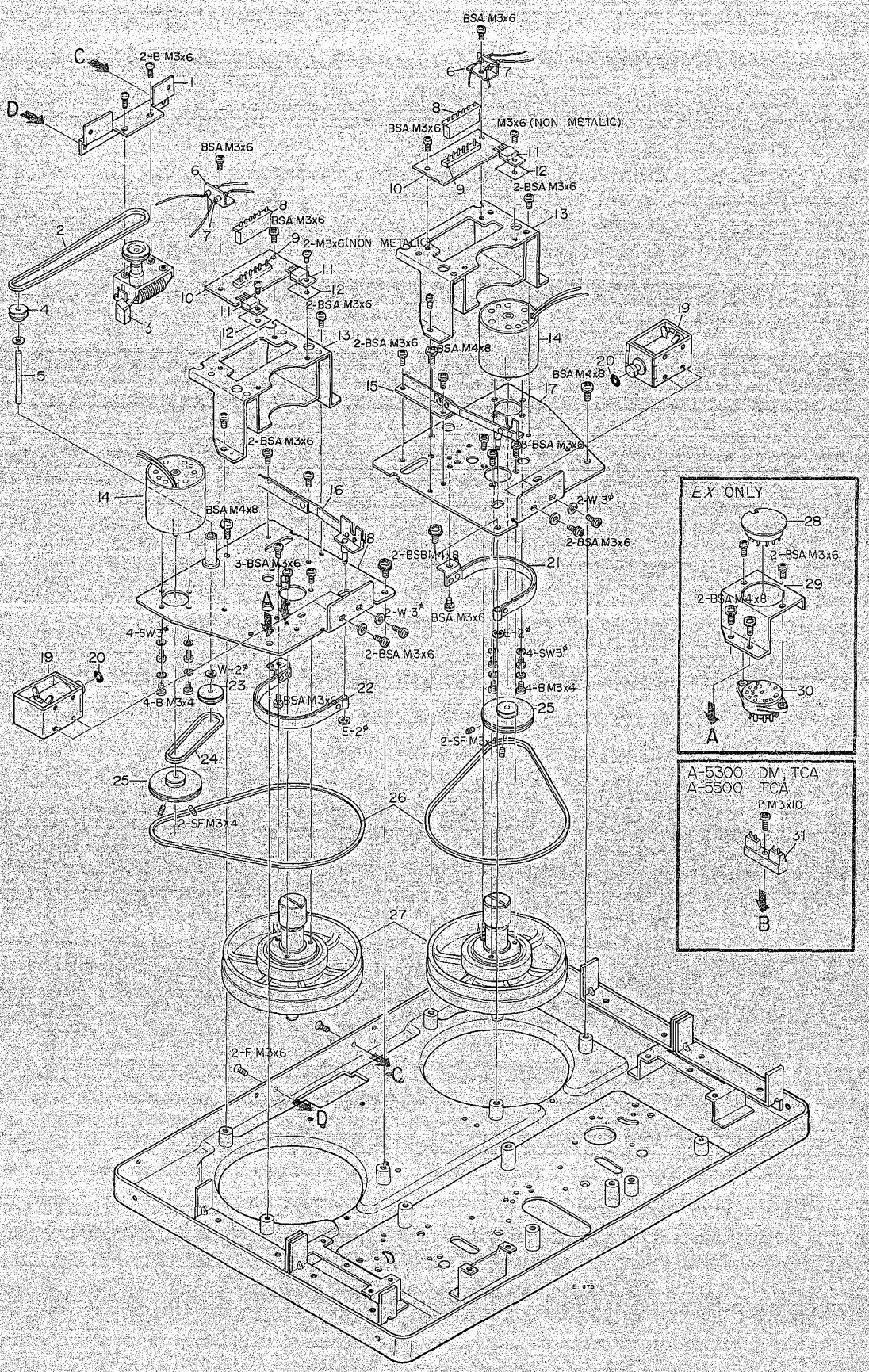

PARTS LIST-5

REF. NO.	TEAC PARTS NO.	DESCRIPTION	REVISION
5- 1	55503801	Plate, Counter	
5- 2	55302481	Belt, Counter; B	
5- 3	55001540	Counter Assy, Index	
5- 4	55302140	Pulley, Counter; 9ϕ	
5- 5	55402081	Shaft, Counter Pulley	
5- 6	55503930	Mount, Angle; Capacitor	
5- 7	50547980	C, Feed Through Ceramic (C73∿76) (pulse noise suppressing)	
5- 8	50438400	Socket, Miniature PC; 6P (P72·73)	
5- 9	50436620	Plug, Miniature PC; 6P (J72·73)	
5-10	51670261	PC Bd., Connector	
5-11	50423800	Transistor, 2SD235-D (Q87·88·134)	
5-12	50332910	Sheet, Insul.; Mylar	
5-13	55001811	Bracket Assy, Connector PC Bd.	
5-14	71051010	Motor, DC; Reel	
5-15	55001771	Arm, Brake; R	
5-16	55001781	Arm, Brake; L	
5-17	55503882	Plate, Reel Table; L	
5-18	55001571	Plate Assy, Reel Table; R	
5-19	50616750	Solenoid, Brake (C)	
5-20	55302510	"O" Ring, 4ϕ (Spacer)	
5-21	55001750	Brake Band Assy, R	
5-22	55001760	Brake Band Assy, L	
5-23	55302460	Pulley, Counter; 15ϕ	
5-24	55302471	Belt, Counter; A	
5-25	55401890	Pulley, Motor	
5-26	55302120	Belt, Reel Table	
5-27	55001742	Reel Table Assy	
5-28	50434710	Plug, Voltage Selector (*EX*)	
5-29	55503820	Bracket, Voltage Selector (*EX*)	
5-30	50435020	Socket, Voltage Selector (*EX*)	
5-31	50438350	Terminal Strip, 2P (*DM*, *TCA*)	

6. ELECTRICAL & DRIVE UNIT GROUP

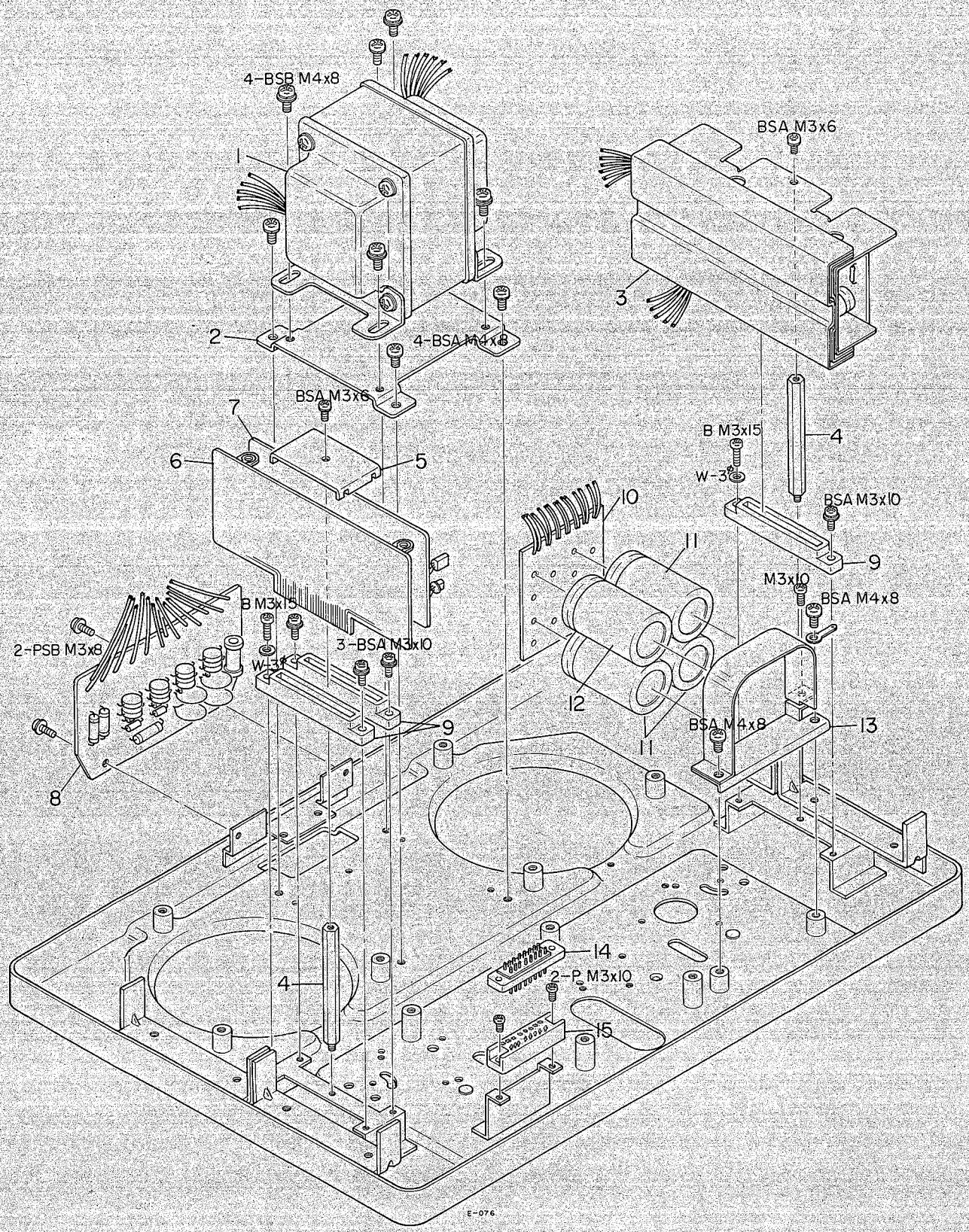

PARTS LIST-6

REF. NO.	TEAC PARTS NO.	DESCRIPTION	REVISION
6- 1	50562740	Transformer, Power	
6- 2	55503830	Plate, Transformer	
6- 3	51680142	PC Bd. Assy, STABILIZER UNIT	
6- 4	55401820	Standoff, STABILIZER PC Bd.	
6- 5	55503810	Clamp, PC Bd.	
6- 6	51680160	PC Bd. Assy, REEL MOTOR DRIVE UNIT	
6- 7	51680171	PC Bd. Assy, SOLENOID DRIVE UNIT	
6- 8	51680181	PC Bd. Assy, RECTIFIER UNIT	
6- 9	50438380	Connector, PC; 14P (J71·121)	
6-10	51670210	PC Bd., Elec. Capacitor Mtg	
6-11	50555710	C, Elec.; 2200μF 50V (C5·7·8)	
6-12	50555720	C, Elec.; 6800μF 16V (C6)	
6-13	55503840	Clamp, Capacitor	
6-14	50436610	Plug, 16P (P151)	
6-15	50438390	Socket, 16P (J151)	

7. MECHANICAL & SUPPORTING GROUP

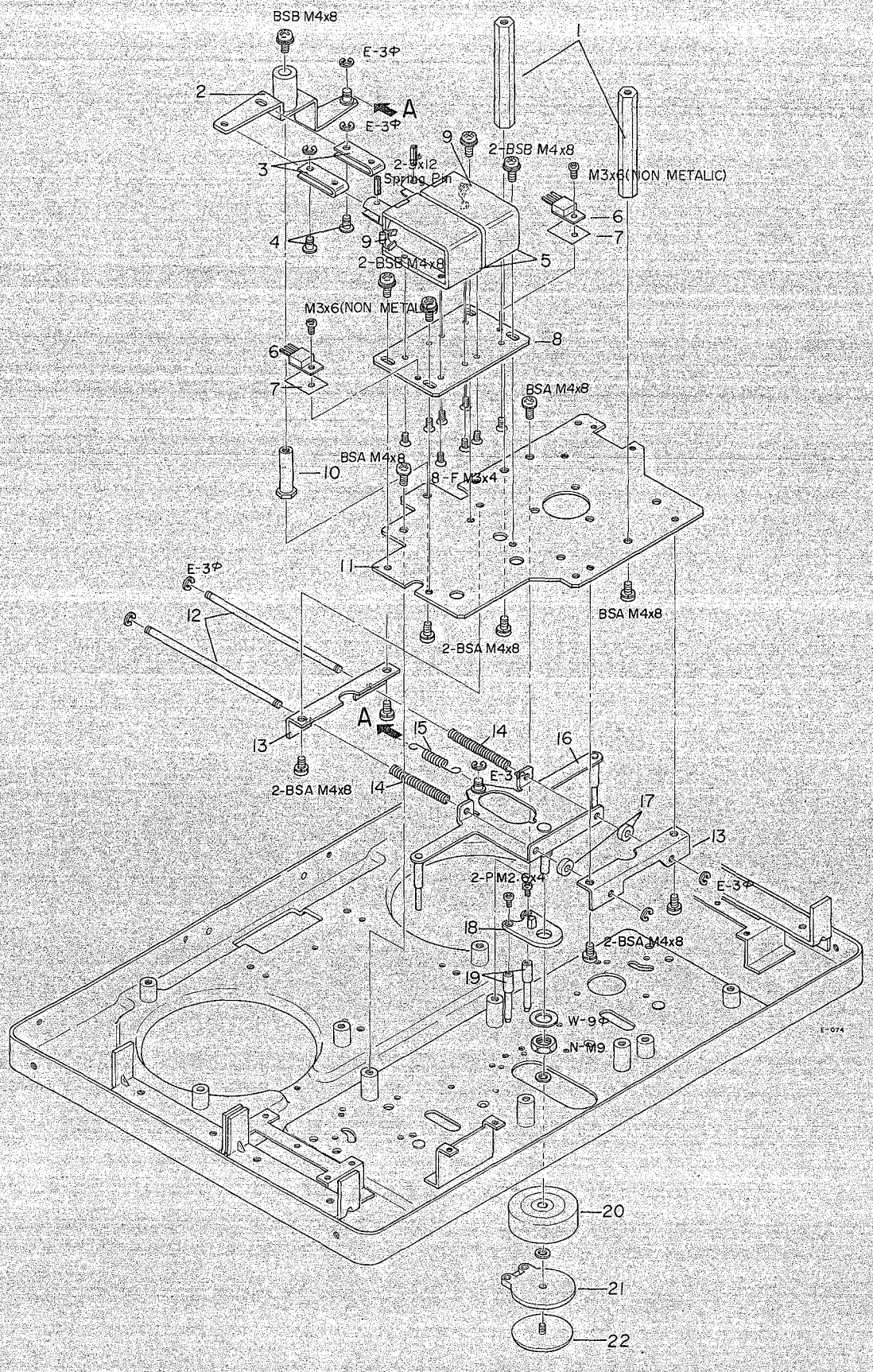

PARTS LIST-7

REF. NO.	TEAC PARTS NO.	DESCRIPTION	REVISION
7- 1	55401931	Standoff, Capstan Motor	
7- 2	55001630	Arm Assy, Pinch Roller	
7- 3	55504040	Plate, Solenoid Coupling	
7- 4	55402020	Pin, Solenoid	
7- 5	51616730	Solenoid, Pinch Roller (A) (SOL.1·2)	
7- 6	50423800	Transistor, 2SD235-D (Q132·133)	
7- 7	50332910	Sheet, Insul.; Mylar	
7- 8	55504020	Plate, Solenoid	
7- 9	50422940	Diode, 1N4006 (D124·125)	
7-10	55401992	Shaft, Roller Arm	
7-11	55503950	Plate, Capstan Motor	
7-12	55401980	Shaft, Lifter Guide	
7-13	55503990	Angle, Guide Shaft	
7-14	55201780	Spring, Guide Shaft	
7-15	55201770	Spring, Tape Lifter	
7-16	55001620	Tape Lifter Assy	
7-17	55504010	Washer, Felt	
7-18	55302170	Plate, Shift Pin	
7-19	55401961	Pin, Tape Shift	
7-20	55302180	Pinch Roller	
7-21	55302190	Cap, Pinch Roller; B	
7-22	55401970	Cap, Pinch Roller; A	

8. CAPSTAN DRIVE ASSEMBLY

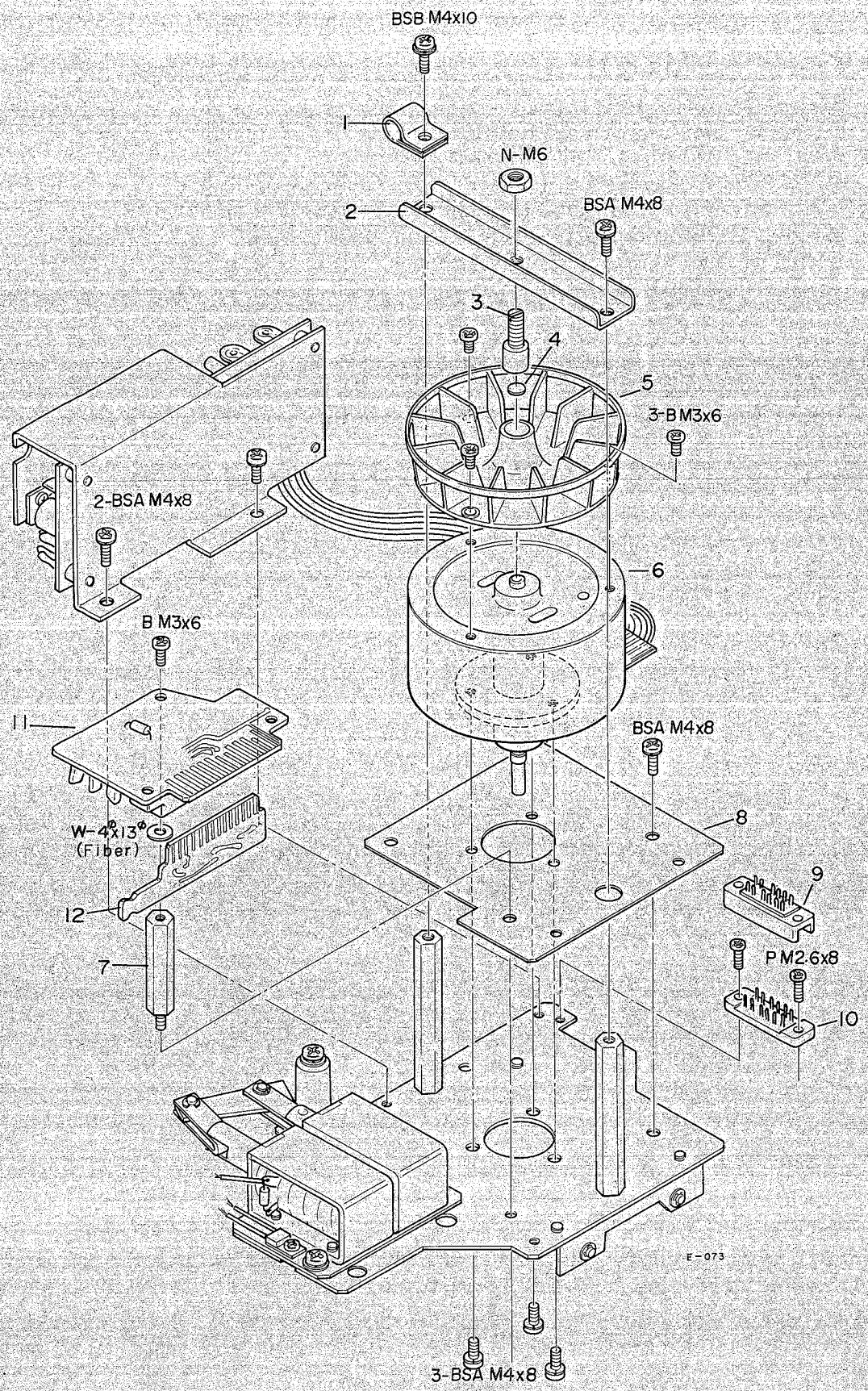

PARTS LIST-8

REF. NO.	TEAC PARTS NO.	DESCRIPTION	REVISION
8- 1	50276290	Clamp, Wire; B	
8- 2	55503980	Plate, Thrust Bearing	
8- 3	55402090	Screw, Thrust Bearing	
8- 4	50125590	Thrust Bearing, Fiber	
8- 5	55302430	Fan, Motor Cooling	
8- 6	71060012	Motor, Capstan (incl. CAPSTAN SERVO ASSY)	
8- 7	55402220	Standoff, SUB CONTROL UNIT PC Bd.	
8- 8	55503960	Plate, Shield; Motor	
8- 9	50438410	Socket, 12P (J152)	
8-10	50436630	Plug, 12P (P152)	
8-11	51680440	PC Bd. Assy, SUB CONTROL UNIT	
8-12	51680960	PC Bd. Assy, Terminal; C	

9. PREAMPLIFIER, FRONT SECTION A

A-5300

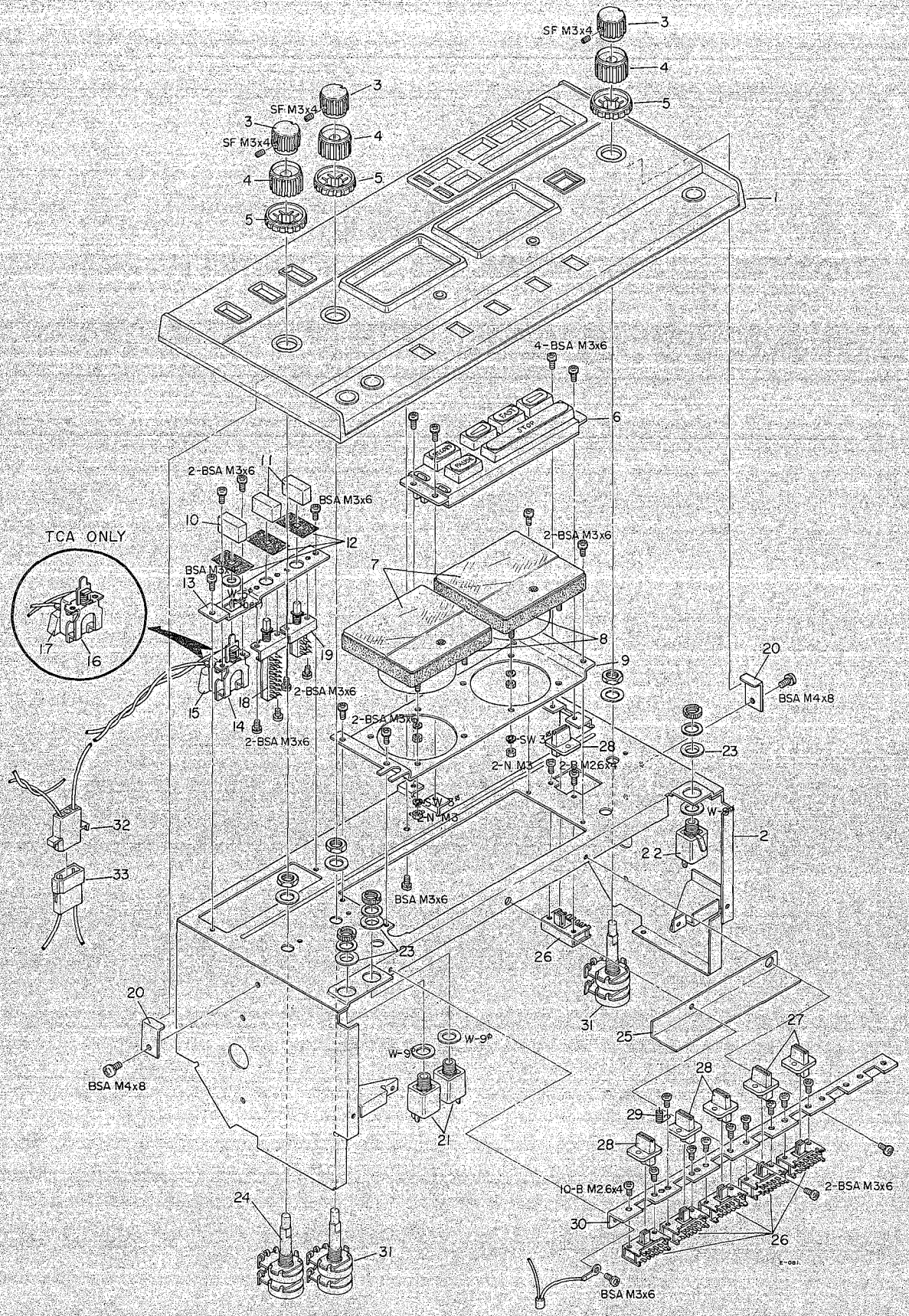

PARTS LIST-9

REF. NO.	TEAC PARTS NO.	DESCRIPTION	REVISION
9- 1	55902770	Trim Panel Assy, Ampl.; A (DM, EX)	
	55902780	Trim Panel Assy, Ampl.; B (TCA)	
9- 2	55001662	Chassis Assy, Ampl.	
9- 3	50237370	Knob, Upper	
9- 4	50237382	Knob, Lower	
9- 5	55302320	Guide, Memory Marker; A	
9- 6	50448640	SW Assy, Motion Control	
9- 7	55001720	VU Meter	
9- 8	50939110	Band, VU Meter	
9- 9	55504171	Plate, VU Meter	
9-10	55302290	Button, F	
9-11	55302300	Button, A	
9-12	55501280	Mask, SW	
9-13	55504160	Plate, Selector SW Mtg	
9-14	50443870	SW, Double-Push; POWER (SW1) (DM,EX)	
9-15	50529050	Spark Killer, 0.1μF+120Ω/400V (DM, EX)	
9-16	50444500	SW, Double-Push; POWER (SW1) (TCA)	
9-17	50529060	Spark Killer, 0.1μF+120Ω/400V (TCA)	
9-18	50443930	SW, Mini Double-Push; SPEED (SW808)	
9-19	50443940	SW, Mini Double-Push; REPEAT (SW806)	
9-20	55504080	Support, Ampl. Trim Panel	
9-21	50430240	Jack, Phone; 2-Cond., MIC (J803·804)	
9-22	50432450	Jack, Phone; 3-Cond., PHONES (J806)	
9-23	50272620	Washer, Insul.; B	
9-24	50535190	VR, 100kΩ ×2, MIC (VR801·802)	
9-25	55504190	Plate, Shield	
9-26	50444671	SW, Slide	
9-27	55302331	Knob, Slide SW; A	
9-28	55302341	Knob, Slide SW; B	
9-29	55201830	Spring, Gnd.	
9-30	55504180	Angle, Slide SW	
9-31	50535180	VR, 50kΩ ×2, LINE/OUTPUT (VR803/805)	
9-32	50435050	Connector, 3P (Female)	
9-33	50436640	Connector, 3P (Male)	

10. PC BOARD GROUPING A

A-5300

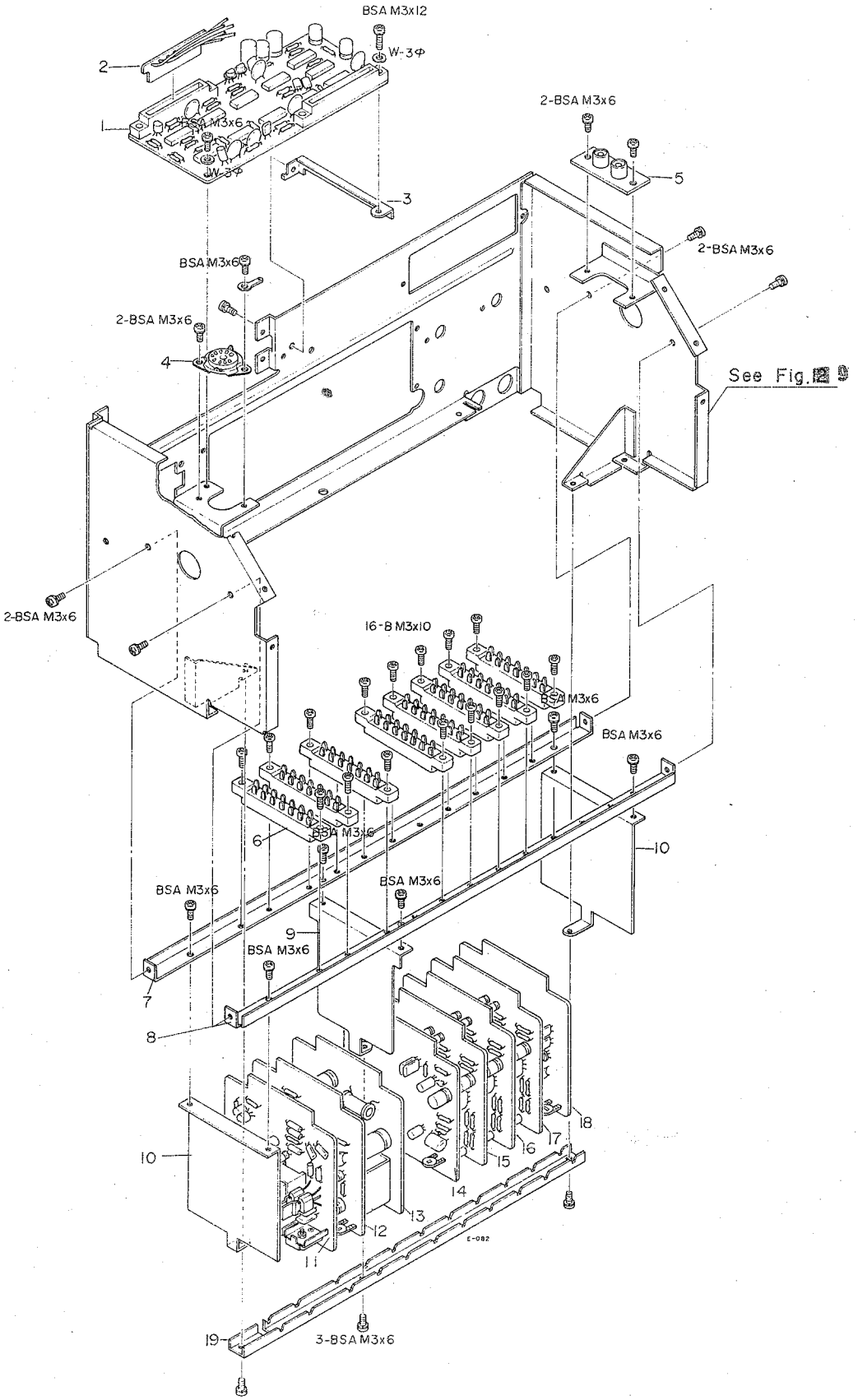

PARTS LIST-10

REF. NO.	TEAC PARTS NO.	DESCRIPTION	REVISION
10- 1	51680153	PC Bd. Assy, CONTROL UNIT	
10- 2	51670250	PC Bd., Terminal; B	
10- 3	55504150	Bracket, CONTROL UNIT PC Bd.	
10- 4	50435040	Socket, 9P, with Clamp (J807)	
10- 5	50434631	Jack, Pin; 2P (J801)	
10- 6	50438380	Connector, PC; 14P	
10- 7	55504201	Angle, PC Connector Mtg; A	
10- 8	55504211	Angle, PC Connector Mtg; B	
10- 9	55507341	Plate, Reinforcing; C	
10-10	55504730	Plate, Reinforcing; D	
10-11	51680292	PC Bd. Assy, BIAS OSCILLATOR UNIT	
10-12	51680240	PC Bd. Assy, RECORD AMP UNIT	
10-13	51680281	PC Bd. Assy, AMPL. STABILIZER UNIT	
10-14	51680320	PC Bd. Assy, RECORD LINE AMPL. UNIT	
10-15	51680210	PC Bd. Assy, METER PHONE AMP UNIT; A	
10-16	51680310	PC Bd. Assy, PLAY LINE AMPL. UNIT	
10-17	51680191	PC Bd. Assy, PLAY EQ AMPL. UNIT	
10-18	51680231	PC Bd. Assy, MIC MIXING AMP UNIT	
10-19	55504221	Angle, PC Bd. Mtg	

11. REAR PANEL A

A-5300

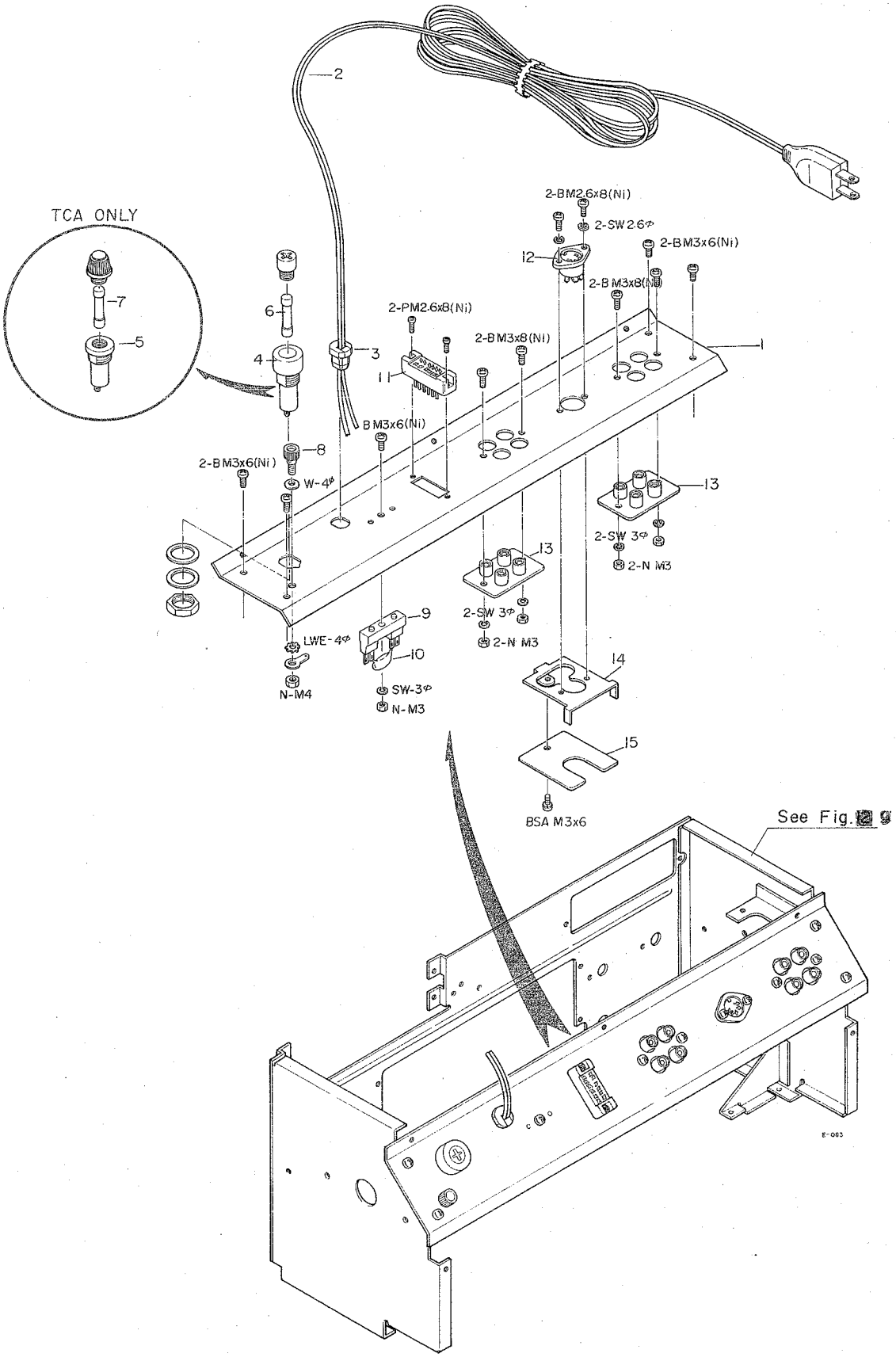

PARTS LIST-11

REF. NO.	TEAC PARTS NO.	DESCRIPTION	REVISION
11- 1	55504240	Panel, Rear Connection; B	
11- 2	50471652	Cord, AC Power (DM, EX)	
	50471661	Cord, AC Power (TCA)	
11- 3	55300470	Strain Relief, AC Power Cord	
11- 4	50924500	Fuse Holder (DM, EX)	
11- 5	50412280	Fuse Holder (TCA·UL)	
11- 6	50411140	Fuse, 2A (F1) (DM, EX100, 117V area)	
	50411010	Fuse, 1A (F1) (EX220, 240V area)	
11- 7	50411340	Fuse, 2A-250V (F1) (TCA·UL)	
11- 8	50454071	Post, GND	
11- 9	50438350	Terminal Strip, 2P	
11-10	50541150	C, Polyst.; 0.0047μF 250V	
11-11	50438410	Socket, 12P, REMOTE CONTROL (J808)	
11-12	50430010	Socket, IN/OUT (DIN) (J803)	
11-13	50436580	Jack, Pin; 4P (J802·805)	
11-14	55504260	Bracket, IN/OUT Socket	
11-15	51680430	PC Bd. Assy, Terminal	

12. PREAMPLIFIER, FRONT SECTION B

A-5500

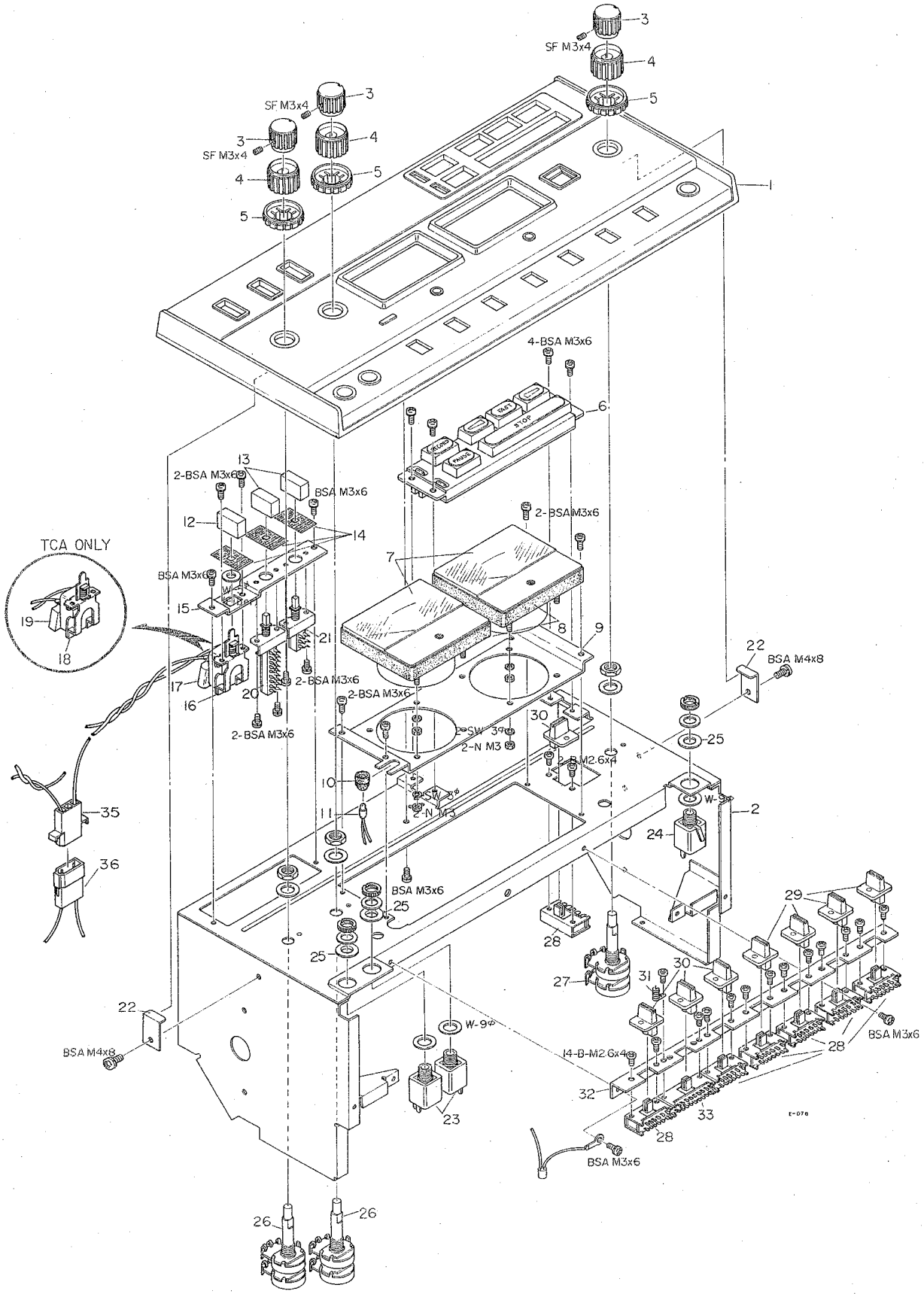

PARTS LIST-12

REF. NO.	TEAC PARTS NO.	DESCRIPTION	REVISION
12- 1	55902900	Trim Panel Assy, Ampl.; D (TCA)	
	55902910	Trim Panel Assy, Ampl.; E (EX)	
12- 2	55001662	Chassis Assy, Ampl.	
12- 3	50237370	Knob, Upper	
12- 4	50237382	Knob, Lower	
12- 5	55302320	Guide, Memory Marker; A	
12- 6	50448640	SW Assy, Motion Control	
12- 7	55001730	VU Meter	
12- 8	50939110	Band, VU Meter	
12- 9	55504171	Plate, VU Meter	
12-10	50237490	Sleeve, Dolby Indic. Lamp	
12-11	50414630	Lamp, DOLBY NR Indic.	
12-12	55302290	Button, F	
12-13	55302300	Button, A	
12-14	55501280	Mask, SW	
12-15	55504160	Plate, Selector SW Mtg	
12-16	50443870	SW, Double-Push; POWER (SW1) (EX)	
12-17	50529050	Spark Killer, 0.1μF+120Ω/400V (EX)	
12-18	50444500	SW, Double-Push; POWER (SW1) (TCA)	
12-19	50529060	Spark Killer, 0.1μF+120Ω/400V (TCA)	
12-20	50443930	SW, Mini Double-Push; SPEED (SW808)	
12-21	50443940	SW, Mini Double-Push; REPEAT (SW806)	
12-22	55504080	Support, Ampl. Trim Panel	
12-23	50430240	Jack, Phone; 2-Cond., MIC (J803·804)	
12-24	50432450	Jack, Phone; 3-Cond., PHONES (J806)	
12-25	50272620	Washer, Insul.; B	
12-26	50535190	VR, L00kΩ ×2, MIC/LINE (VR801·802/803)	
12-27	50535180	VR, 50kΩ ×2, OUTPUT (VR815)	
12-28	50444671	SW, Slide	
12-29	55302331	Knob, Slide SW; A	
12-30	55302341	Knob, Slide SW; B	
12-31	55201830	Spring, Gnd.	
12-32	55504180	Angle, Slide SW	
12-33	50444691	SW, Slide; DOLBY FM/COPY (SW811)	
12-34		(not used)	
12-35	50435050	Connector, 3P (Female)	
12-36	50436640	Connector, 3P (Male)	

13. PC BOARD GROUPING B

A-5500

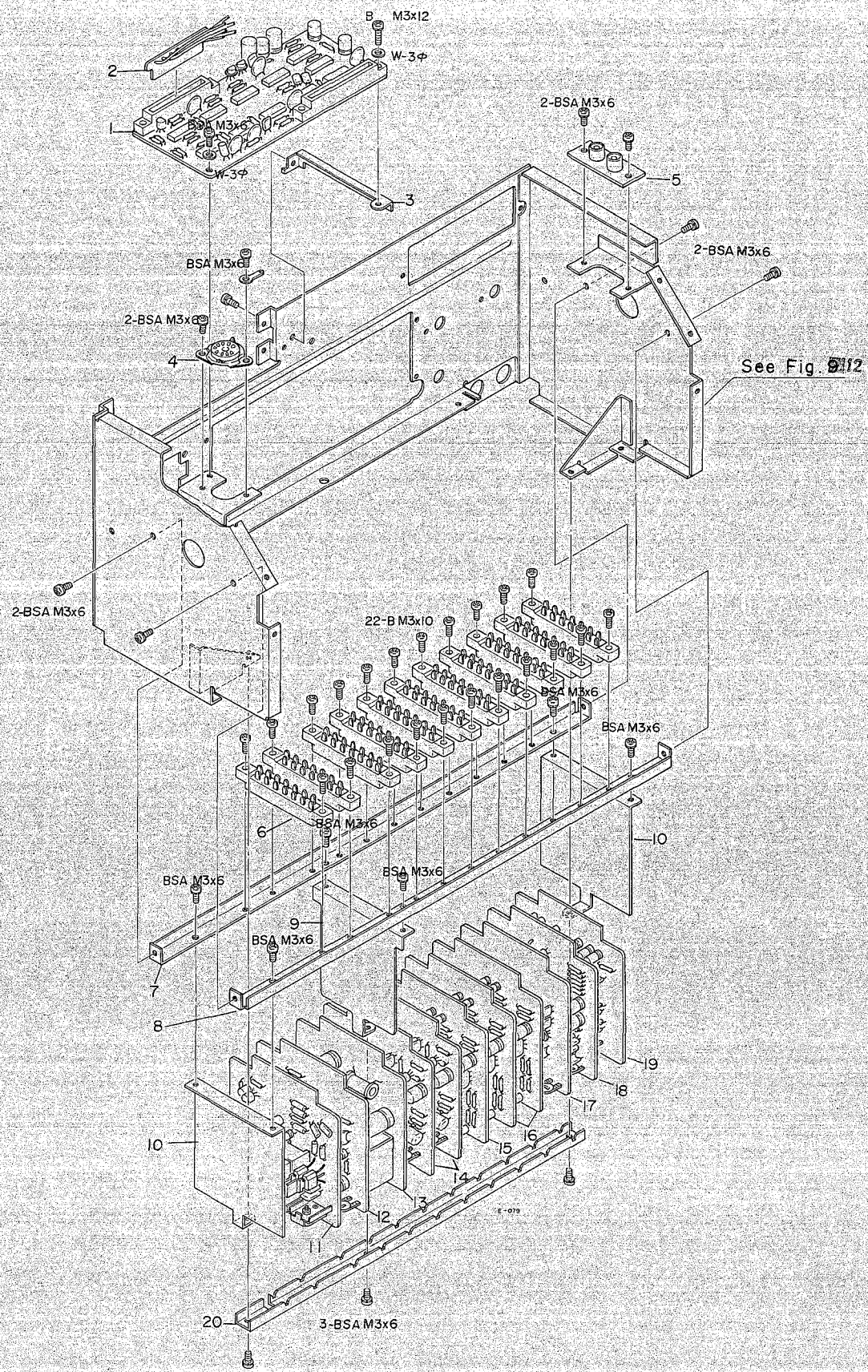

PARTS LIST-13

REF. NO.	TEAC PARTS NO.	DESCRIPTION	REVISION
13- 1	51680153	PC Bd. Assy, CONTROL UNIT	
13- 2	51670250	PC Bd., Terminal; B	
13- 3	55504150	Bracket, CONTROL UNIT PC Bd.	
13- 4	50435040	Socket, 9P, with Clamp (J807)	
13- 5	50434631	Jack, Pin; 2P (J801)	
13- 6	50438380	Connector, PC; 14P	
13- 7	55504201	Angle, PC Connector Mtg; A	
13- 8	55504211	Angle, PC Connector Mtg; B	
13- 9	55507341	Plate, Reinforcing; C	
13-10	55504730	Plate, Reinforcing; D	
13-11	51680292	PC Bd. Assy, BIAS OSCILLATOR UNIT	
13-12	51680240	PC Bd. Assy, RECORD AMP UNIT	
13-13	51680281	PC Bd. Assy, AMPL. STABILIZER UNIT	
13-14	51680340	PC Bd. Assy, DOLBY ENCODER UNIT	
13-15	51680220	PC Bd. Assy, METER PHONE AMP UNIT; B	
13-16	51680331	PC Bd. Assy, DOLBY DECODER UNIT	
13-17	51680200	PC Bd. Assy, DOLBY CAL UNIT	
13-18	51680191	PC Bd. Assy, PLAY EQ AMP UNIT	
13-19	51680231	PC Bd. Assy, MIC MIXING AMP UNIT	
13-20	55504221	Angle, PC Bd. Mtg	

14. REAR PANEL B

A-5500

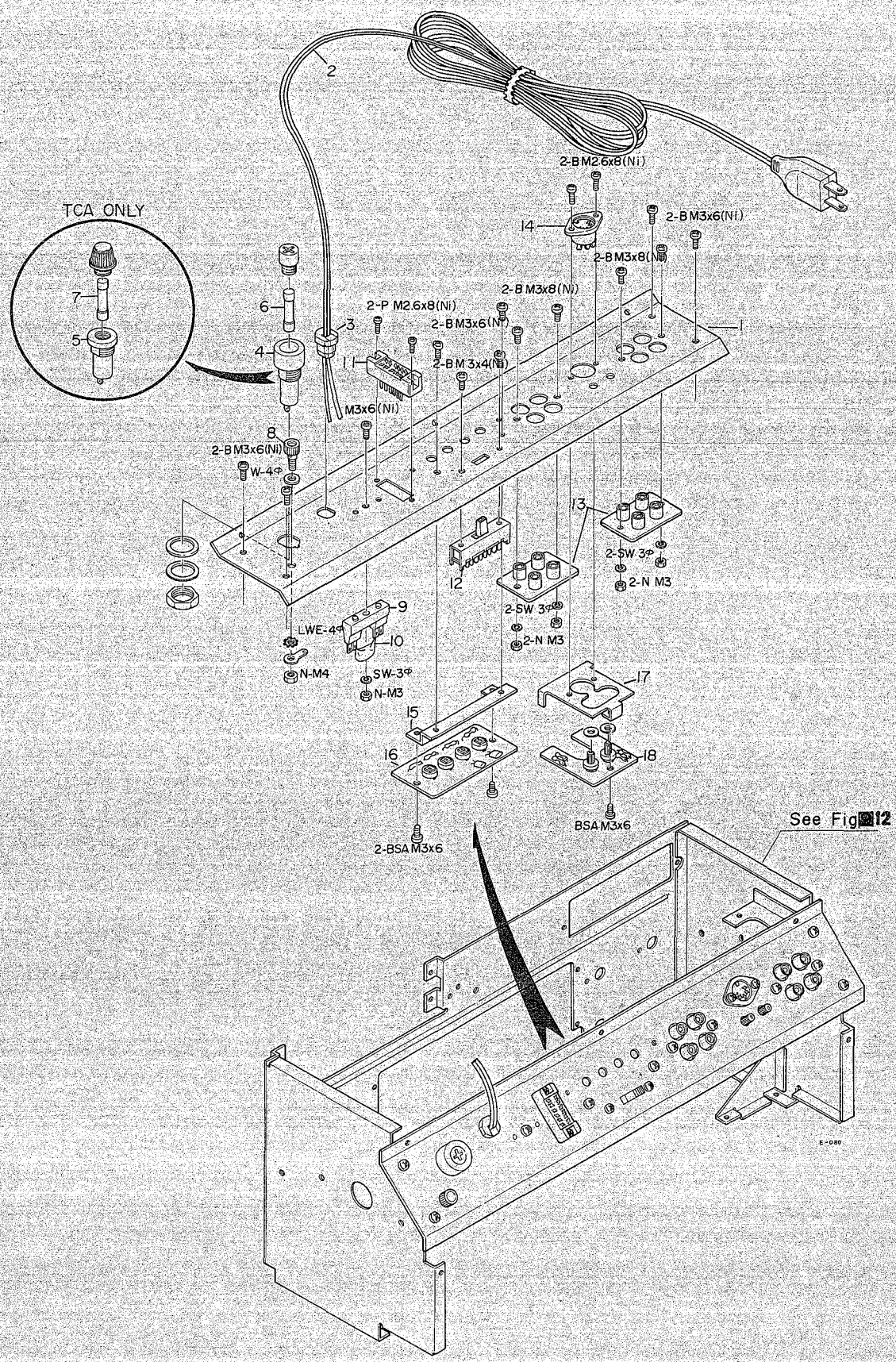

PARTS LIST-14

REF. NO.	TEAC PARTS NO.	DESCRIPTION	REVISION
14- 1	55504230	Panel, Rear Connection; A	
14- 2	50471652	Cord, AC Power (EX)	
	50471661	Cord, AC Power (TCA)	
14- 3	55300470	Strain Relief, AC Power Cord	
14- 4	50924500	Fuse Holder (EX)	
14- 5	50412280	Fuse Holder (TCA·UL)	
14- 6	50411140	Fuse, 2A (F1) (EX 100, 117V area)	
	50411010	Fuse, 1A (F1) (EX 220, 240V area)	
14- 7	50411340	Fuse, 2A-250V (F1) (TCA·UL)	
14- 8	50454071	Post, GND	
14- 9	50438350	Terminal Strip, 2P	
14-10	50541150	C, Polyst.; 0.0047μF 250V	
14-11	50438410	Socket, 12P, REMOTE CONTROL (J808)	
14-12	50444680	SW, Slide; CAL TONE/IN·OUT (SW812)	
14-13	50436580	Jack, Pin; 4P (J802·805)	
14-14	50430010	Socket, IN/OUT (DIN)	
14-15	55504250	Bracket, PC Bd.	
14-16	51680380	PC Bd. Assy, RECORD LEVEL ADJ UNIT	
14-17	55504260	Bracket, IN/OUT Socket	
14-18	51680370	PC Bd. Assy, DOLBY FM/COPY CAL	

15. STANDARD ACCESSORIES

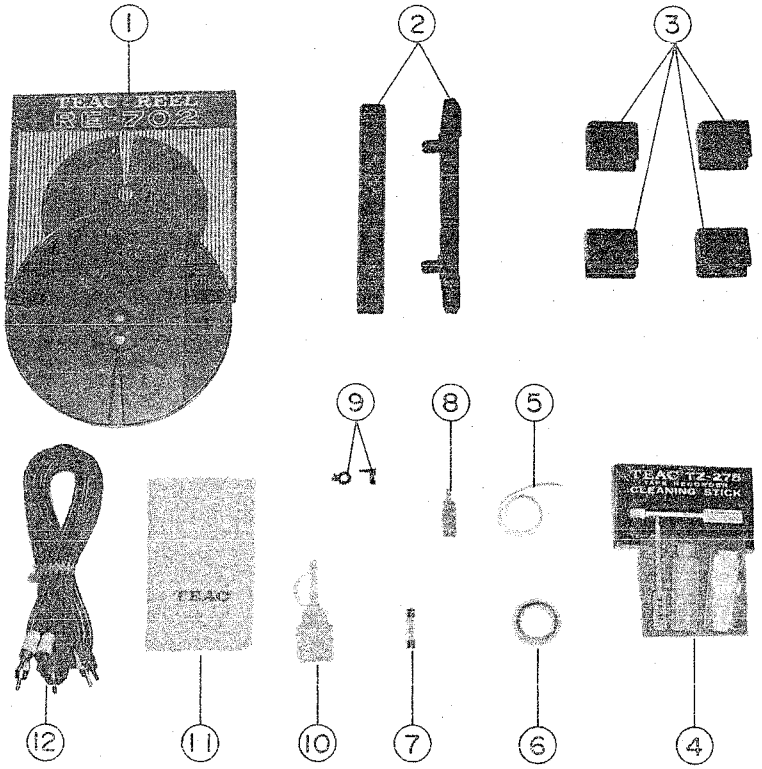

PARTS LIST-15

REF. NO.	TEAC PARTS NO.	DESCRIPTION	REVISION
15- 1	*RE-702	Empty Reel, 7 inch Small Hub	
15- 2	55001710	Mtg Feet, Plastic (For Vertical Use) (2 used)	
15- 3	50276971	Mtg Feet, Rubber (For Horizontal Use) (4 used)	
15- 4	57100300	Cleaning Stick (TZ-275)	
15- 5		Sensing Foil	
15- 6		Splicing Tape	
15- 7	50411010	Fuse, 1A (EX 220, 240V area)	
	50411140	Fuse, 2A (EX 100, 117V area)	
	50411340	Fuse, 2A-250V (TCA·UL)	
15- 8	55502540	Screw Driver (*A-5500* only)	
15- 9	55302400	Guide, Tension Arm (2 used)	
15-10	50291860	Oil and Applicator	
15-11	50291350	Silicone Cloth	
15-12	50471250	Input-output Connection Cord (2 used)	
-----	51012050	A-5300 Instruction Manual (DM)	
-----	51012060	A-5300 Instruction Manual (EX)	
-----	51012070	5300 Instruction Manual (TCA)	
-----	51012080	A-5500 Instruction Manual (EX)	
-----	51012090	5500 Instruction Manual (TCA)	

NOTE: The Empty Reel is available as an Optional Accessory and thus is not assigned a special TEAC Parts number. Please order this by the MODEL CODE NUMBER (RE-702). This number is included on the package.

ELECTRICAL PARTS LIST

PRINTED CIRCUIT BOARD SECTION

NOTE

1. Electrical components of the PC Boards can be identified by consulting the Schematic Diagram and PC Board Diagram which are included in the basic Service Manual. After determining the Circuit Reference number for the part, use that number to obtain the TEAC Parts Number from this listing. Do not include the Circuit Reference number with your order - it is included here for your reference use only.

2. Double designated circuit reference numbers indicate left channel/right channel (example: R101/201).

1. CONTROL UNIT

CIRCUIT REF.NO.	TEAC PARTS NO.	DESCRIPTION
------	51680153	PC Bd. Assy, CONTROL UNIT
	51670032	PC Bd., CONTROL UNIT
		IC's
IC41~44	50427130	SN7402N
IC45	50427120	SN7400N
IC46	50427130	SN7402N
IC47	50427140	SN7410N
IC48~51	50427120	SN7400N
		TRANSISTORS
Q41·44	50424600	2SC828-S
Q42·43	50423500	2SC734-Y
		DIODES
D41~49	50422130	1N60
		RESISTORS
R41~43	50572740	Carbon 470Ω 1/4W 5%
R44	50572980	Carbon 4.7kΩ 1/4W 5%
R45	50572620	Carbon 150Ω 1/4W 5%
R46	50572820	Carbon 1kΩ 1/4W 5%
R47·48	50572740	Carbon 470Ω 1/4W 5%
R49·50	50572780	Carbon 680Ω 1/4W 5%
R51	50572820	Carbon 1kΩ 1/4W 5%
R52	50572700	Carbon 330Ω 1/4W 5%
R53~57	50572820	Carbon 1kΩ 1/4W 5%
R58·60	50573140	Carbon 22kΩ 1/4W 5%
R59	50572820	Carbon 1kΩ 1/4W 5%
R61~63	50572820	Carbon 1kΩ 1/4W 5%
R64	50572520	Carbon 56Ω 1/4W 5%
R65	50572860	Carbon 1.5kΩ 1/4W 5%
R66	50572740	Carbon 470Ω 1/4W 5%
R67	50572680	Carbon 270Ω 1/4W 5%
R68	50572700	Carbon 330Ω 1/4W 5%
		CAPACITORS
C41	50554850	Elec. 22μF 6.3V
C42·43	50542300	Ceramic 0.047μF 50V
C44	50548020	Mylar 0.01μF 50V
C45	50548290	Mylar 0.022μF 50V
C46·47	50548020	Mylar 0.01μF 50V
C48·52	50554230	Elec. 100μF 6.3V
C49~51	50554600	Elec. 470μF 6.3V
C53~57	50542300	Ceramic 0.047μF 50V
C58	50548320	Mylar 0.001μF 50V 10%
C59	50548270	Mylar 0.047μF 50V 10%
		MISCELLANEOUS
J41	50438370	Connector, PC, 14P
J43	50438360	Connector, PC, 12P

2. SUB CONTROL UNIT

CIRCUIT REF.NO.	TEAC PARTS NO.	DESCRIPTION
------	51680440	PC Bd. Assy, SUB CONTROL UNIT
------	51670440	PC Bd., SUB CONTROL UNIT
		IC's
IC151	50427130	SN7402N
IC152~154	50427120	SN7400N
		TRANSISTOR
Q151	50424340	2SC1000-BL
		DIODES
D151~153	50422130	1N60
		CARBON RESISTORS
R151	50572740	470Ω 1/4W 5%
R152	50572820	1kΩ 1/4W 5%
R153	50572820	1kΩ 1/4W 5%
R154	50572820	1kΩ 1/4W 5%
R155	50572840	1.2kΩ 1/4W 5%
R156	50572520	56Ω 1/4W 5%
R157	50572820	1kΩ 1/4W 5%
R158	50572820	1kΩ 1/4W 5%
R159	50572820	1kΩ 1/4W 5%
		CAPACITORS
C151	50548020	Mylar 0.01μF 50V
C152	50548020	Mylar 0.01μF 50V
C153	50549510	Mylar 0.068μF 50V
C154	50554860	Elec. 330μF 6.3V
C155	50554860	Elec. 330μF 6.3V
C156	50554230	Elec. 100μF 6.3V
C157	50543280	Polyst. 330pF 250V
		MISCELLANEOUS
J153	50438370	Connector, PC, 14P

3. REEL MOTOR DRIVE UNIT

CIRCUIT REF.NO.	TEAC PARTS NO.	DESCRIPTION
-------	51680160	PC Bd. Assy, REEL MOTOR DRIVE UNIT
-------	51670040	PC Bd., REEL MOTOR DRIVE UNIT
		TRANSISTORS
Q71·77, Q73~75, Q79·85, Q81~83	50424600	2SC828-S
Q72·76, Q78·80, Q84·86	50423790	2SA564-Q
		RESISTORS
R71·72, R75·77, R80·83, R86·94, R97·99, R102, R105, R108	50572820	Carbon 1kΩ 1/4W 5%
R73·78, R81·84, R91·92, R95, R100, R103, R106, R113, R114	50573140	Carbon 22kΩ 1/4W 5%

CIRCUIT REF.NO.	TEAC PARTS NO.	DESCRIPTION	
R74	50572700	Carbon	330Ω 1/4W 5%
R76	50572580	Carbon	100Ω 1/4W 5%
R79	50572780	Carbon	680Ω 1/4W 5%
R82	50573000	Carbon	5.6kΩ 1/4W 5%
R85	50572700	Carbon	330Ω 1/4W 5%
R87	50572860	Carbon	1.5kΩ 1/4W 5%
R88	50573060	Carbon	10kΩ 1/4W 5%
R89	50572940	Carbon	3.3kΩ 1/4W 5%
R90	50572980	Carbon	4.7kΩ 1/4W 5%
R93	50526170	Wire Wound	4.7Ω 2W
R96	50572700	Carbon	330Ω 1/4W 5%
R98	50572580	Carbon	100Ω 1/4W 5%
R101	50572780	Carbon	680Ω 1/4W 5%
R104	50573000	Carbon	5.6kΩ 1/4W 5%
R107	50572700	Carbon	330Ω 1/4W 5%
R109	50572860	Carbon	1.5kΩ 1/4W 5%
R110	50573060	Carbon	10kΩ 1/4W 5%
R111	50572940	Carbon	3.3kΩ 1/4W 5%
R112	50572980	Carbon	4.7kΩ 1/4W 5%
R115	50526170	Wire Wound	4.7Ω 2W
		MISCELLANEOUS	
VR71·72	50534240	VR, Semi-fixed; 20kΩB	
C71·72	50554040	C, Elec.; 10μF 25V	

4. SOLENOID DRIVE UNIT

CIRCUIT REF.NO.	TEAC PARTS NO.	DESCRIPTION
------	51680171	PC Bd. Assy, SOLENOID DRIVE UNIT
------	51670051	PC Bd., SOLENOID DRIVE UNIT
		TRANSISTORS
Q121·122	50424600	2SC828-S
Q123	50423790	2SA564-Q
Q124·125	50424600	2SC828-S
Q126	50423790	2SA564-Q
Q127·128	50424600	2SC828-S
Q129	50423790	2SA564-Q
Q130	50424750	2SC1384-Q *or*
	50424910	2SC1384-R
Q131	50424340	2SC1000-BL
		DIODES
D121·123	50422130	1N60
D124·127	50422130	1N60
		CARBON RESISTORS
R121·122	50572820	1kΩ 1/4W 5%

CIRCUIT REF.NO.	TEAC PARTS NO.	DESCRIPTION
R123	50572660	220Ω 1/4W 5%
R124	50572840	1.2kΩ 1/4W 5%
R125	50573300	100kΩ 1/4W 5%
R126·127	50572820	1kΩ 1/4W 5%
R128	50572660	220Ω 1/4W 5%
R129	50572840	1.2kΩ 1/4W 5%
R130	50573300	100kΩ 1/4W 5%
R131·132	50572820	1kΩ 1/4W 5%
R133	50572660	220Ω 1/4W 5%
R134	50572800	820Ω 1/4W 5%
R135	50573300	100kΩ 1/4W 5%
R136	50572820	1kΩ 1/4W 5%
R137	50573140	22kΩ 1/4W 5%
R138	50573000	5.6kΩ 1/4W 5%
R139	50573060	10kΩ 1/4W 5%
		CAPACITORS
C121	50549690	Elec. 4.7μF 25V
C122·123	50549680	Elec. 3.3μF 25V
C126	50554030	Elec. 47μF 6.3V
C127	50554530	Elec. 4.7μF 25V

5. STABILIZER UNIT

CIRCUIT REF.NO.	TEAC PARTS NO.	DESCRIPTION
-----	51680142	PC Bd. Assy, STABILIZER UNIT
-----	51670022	PC Bd., STABILIZER UNIT
		TRANSISTORS
Q21	50424600	2SC828-S
Q22	50424750	2SC1384-Q
Q23·29	50423800	2SD235-O
Q24~27	50424600	2SC828-S
Q28	50424600	2SC828-S
Q30·31	50424600	2SC828-S
		DIODES
DZ1	50422580	Zener, 02Z6.2A
DZ2	50422980	Zener, 02Z9.1A
DZ3	50422980	Zener, RD-3A
D1	50422440	S3016-R
		RESISTORS
R21	50572980	Carbon 4.7kΩ 1/4W 5%
R22	50526160	Wire Wound 0.33Ω 1W
R23·27	50572960	Carbon 3.9kΩ 1/4W 5%
R24·30	50572820	Carbon 1kΩ 1/4W 5%
R25·28	50572860	Carbon 1.5kΩ 1/4W 5%
R26	50572940	Carbon 3.3kΩ 1/4W 5%
R29·31	50572740	Carbon 470Ω 1/4W 5%
R32	50572660	Carbon 220Ω 1/4W 5%
R33	50572760	Carbon 560Ω 1/4W 5%
R34	50572820	Carbon 1kΩ 1/4W 5%
R35	50573020	Carbon 6.8kΩ 1/4W 5%
		CAPACITORS
C21	50548020	Mylar 0.01μF 50V
C22	50554420	Elec. 470μF 25V
C23	50554890	Elec. 1000μF 16V
C24	50554870	Elec. 1000μF 6.3V
		VARIABLE RESISTORS
VR21	50534190	VR, Semi-fixed; 500kΩB
VR22	50534210	VR, Semi-fixed; 5kΩB
		MISCELLANEOUS
----	55504330	Heat Sink, B
----	55504340	Heat Sink, C
----	55504580	Heat Sink, E
----	50332910	Sheet, Insul. (2 used)

6. RECTIFIER UNIT

CIRCUIT REF.NO.	TEAC PARTS NO.	DESCRIPTION
------	51680181	PC Bd. Assy, RECTIFIER UNIT
------	51670060	PC Bd., RECTIFIER UNIT
D1~4	50422360	Diode, FR2-06
D5~12	50422920	Diode, 1N4004
D13~16	50422360	Diode, FR2-06
C1~4	50542230	C, Ceramic; 0.01μF 500V
R1	50526180	R, Wire Wound; 3.3Ω 2W
F2~4	50411360	Fuse, 2A

7. PLAY EQ AMP UNIT

CIRCUIT REF.NO.	TEAC PARTS NO.	DESCRIPTION
------	51680191	PC Bd. Assy, PLAY EQ AMP UNIT
------	51670071	PC Bd., PLAY EQ AMP UNIT
		TRANSISTORS
Q201/202	50424340	2SC1000-BL
Q203/204	50423650	2SA494-Y
Q205/206	50424340	2SC1000-BL
Q207/208	50424340	2SC1000-BL
Q209	50424340	2SC1000-BL
		DIODE
DZ201	50422580	Zener, 02Z6.2A
		CARBON RESISTORS
R201/202	50573340	150kΩ 1/4W 5%
R203/204	50572820	1kΩ 1/4W 5%
R205/206	50573240	56kΩ 1/4W 5%
R207/208	50573240	56kΩ 1/4W 5%
R209/210	50573220	47kΩ 1/4W 5%
R211/212	50573200	39kΩ 1/4W 5%
R213/214	50573180	33kΩ 1/4W 5%
R215/216	50573080	12kΩ 1/4W 5%
R217/218	50572720	390Ω 1/4W 5%
R219/220	50573060	10kΩ 1/4W 5%
R221/222	50572680	180Ω 1/4W 5%
R223/224	50572840	1.2kΩ 1/4W 5%
R225/226	50572840	1.2kΩ 1/4W 5%
R227/228	50573360	180kΩ 1/4W 5%
R229/230	50572920	2.7kΩ 1/4W 5%
R231/232	50572820	1kΩ 1/4W 5%
R233/234	50573000	5.6kΩ 1/4W 5%
R235/236	50572740	470Ω 1/4W 5%
R237/238	50573300	100kΩ 1/4W 5%
R239	50573300	100kΩ 1/4W 5%
R240	50572600	120Ω 1/4W 5%
R241	50572920	2.7kΩ 1/4W 5%
		CAPACITORS
C201/202	50554490	Elec. 47μF 25V
C203/204	50546190	Tantal. 10μF 10V
C205/206	50554010	Elec. 47μF 16V
C207/208	50547560	Dip. Mica 470pF 50V
C209/210	50549700	Elec. 10μF 25V
C211/212	50554230	Elec. 100μF 6.3V
C213/214	50543820	Dip. Mica 22pF 50V
C215/216	50548960	Mylar 0.015μF 50V 5%
C217/218	50547560	Dip. Mica 470pF 50V
C219/220	50554540	Elec. 1μF 50V
C221/222	50554040	Elec. 10μF 25V
C223/224	50554490	Elec. 47μF 25V
C225	50548270	Mylar 0.047μF 50V 10%
		VARIABLE RESISTORS
VR201/202	50534220	Semi-fixed, 10kΩB
VR203/204	50534210	Semi-fixed, 5kΩB

8. METER PHONE AMP UNIT

CIRCUIT REF.NO.	TEAC PARTS NO.	DESCRIPTION
-----	51680210	PC Bd. Assy, METER PHONE AMP UNIT; A (*A-5300*)
-----	51680220	PC Bd. Assy, METER PHONE AMP UNIT; B (*A-5500*)
-----	51670090	PC Bd., METER PHONE AMP UNIT
		TRANSISTORS
Q351/352	50423770	2SC644-T
Q353/354	50423770	2SC644-T
Q355/356	50424600	2SC828-S
		CARBON RESISTORS
R351/352	50572820	1kΩ 1/4W 5%
R353/354	50572820	1kΩ 1/4W 5%
R355/356	50573280	82kΩ 1/4W 5%
R357/358	50573260	68kΩ 1/4W 5%
R359/360	50573000	5.6kΩ 1/4W 5%
R361/362	50572580	100Ω 1/4W 5%
R363/364	50573220	47kΩ 1/4W 5%
R365/366	50572820	1kΩ 1/4W 5%
R367/368	50573240	56kΩ 1/4W 5%
R369/370	50573500	680kΩ 1/4W 5%
R371/372	50572760	560Ω 1/4W 5%
R373/374	50572940	3.3kΩ 1/4W 5%
R375/376	50572800	820Ω 1/4W 5%
R377/378	50572580	100Ω 1/4W 5%
R379/380	50573180	33kΩ 1/4W 5% (*A-5300*)
	50573120	18kΩ 1/4W 5% (*A-5500*)
R381/382	50573320	120kΩ 1/4W 5%
R383/384	50573420	330kΩ 1/4W 5%
R385/386	50572820	1kΩ 1/4W 5%
R387/388	50572940	3.3kΩ 1/4W 5%
R389/390	50573240	56kΩ 1/4W 5%
R391/392	50572700	330Ω 1/4W 5%
		CAPACITORS
C351/352	50554540	Elec. 1μF 50V
C353/354	50554510	Elec. 10μF 35V
C355/356	50554540	Elec. 1μF 50V
C357/358	50554950	Elec. 22μF 25V
C359/360	50555540	Elec. 47μF 10V
C361/362	50554350	Elec. 10μF 50V
C363/364	50554540	Elec. 1μF 50V
C365/366	50543820	Dip. Mica 22pF 50V
C367/368	50554970	Elec. 0.47μF 50V
C369/370	50554050	Elec. 10μF 16V
		VARIABLE RESISTORS
VR351/352	50534210	Semi-fixed, 5kΩB
		MISCELLANEOUS
T351/352	50562141	Transformer, Headphone; 3kΩ:8Ω

9. MIC MIXING AMP UNIT

CIRCUIT REF.NO.	TEAC PARTS NO.	DESCRIPTION
--------	51680231	PC Bd. Assy, MIC MIXING AMP UNIT
--------	51670101	PC Bd., MIC MIXING AMP UNIT
		TRANSISTORS
Q451/452	50424610	2SC1327-T
Q453/454	50424140	2SA572-YL
Q455/456	50423770	2SC644-T
Q457/458	50423770	2SC644-T
		CARBON RESISTORS
R451/452	50572820	1kΩ 1/4W 5%
R453/454	50573080	12kΩ 1/4W 5%
R455/456	50573420	330kΩ 1/4W 5%
R457/458	50573060	10kΩ 1/4W 5%
R459/460	50572580	100Ω 1/4W 5%
R461/462	50573000	5.6kΩ 1/4W 5%
R463/464	50572720	390Ω 1/4W 5%
R465/466	50573380	220kΩ 1/4W 5%
R467/468	50573500	680kΩ 1/4W 5%
R469/470	50572880	1.8kΩ 1/4W 5%
R471/472	50572960	3.9kΩ 1/4W 5%
R473/474	50572920	2.7kΩ 1/4W 5%
R475/476	50573240	56kΩ 1/4W 5%
R477/478	50573400	270kΩ 1/4W 5%
R479/480	50572820	1kΩ 1/4W 5%
R481/482	50572820	1kΩ 1/4W 5%
R483/484	50572820	1kΩ 1/4W 5%
		CAPACITORS
C451/452	50554530	Elec. 4.7μF 25V
C453/454	50555520	Elec. 220μF 25V
C455/456	50547440	Dip. Mica 100pF 50V
C457/458	50547440	Dip. Mica 100pF 50V
V459/460	50547440	Dip. Mica 100pF 50V
V461/462	50554050	Elec. 10μF 15V
V463/464	50554530	Elec. 4.7μF 25V
C465/466	50554530	Elec. 4.7μF 25V
C467/468	50554530	Elec. 4.7μF 25V
C469/470	50547440	Dip. Mica 100pF 50V
C471/472	50554530	Elec. 4.7μF 25V
		VARIABLE RESISTORS
VR451/452	50534260	Semi-fixed, 2kΩB

10. RECORD AMP UNIT

CIRCUIT REF.NO.	TEAC PARTS NO.	DESCRIPTION
--------	51680240	PC Bd. Assy, RECORD AMP UNIT
--------	51670110	PC Bd., RECORD AMP UNIT
		TRANSISTORS
Q501/502	50423770	2SC644-T
Q503/504	50423770	2SC644-T
Q505/506	50423770	2SC644-T
Q507/508	50424340	2SC1000-BL
Q509	50424340	2SC1000-BL
		DIODE
DZ501	50422580	Zener, 0Z6.2A
		CAPACITORS
C501/502	50554530	Elec. 4.7μF 25V
C503/504	50547450	Dip. Mica 220pF 50V
C505/506	50549510	Mylar 0.068μF 50V
C507/508	50554530	Elec. 4.7μF 25V
C509/510	50543820	Dip. Mica 22pF 50V
C511/512	50554050	Elec. 10μF 16V
C513/514	50549240	Mylar 0.039μF 50V 5%
C515/516	50548950	Mylar 0.012μF 50V
C517/518	50549700	Elec. 10μF 25V
C519/520	50543120	Polyst. 820pF 250V
C523	50554900	Elec. 22μF 35V
		CARBON RESISTORS
R501/502	50573220	47kΩ 1/4W 5%
R503/504	50573180	33kΩ 1/4W 5%
R505/506	50572980	4.7kΩ 1/4W 5%
R507/508	50573160	27kΩ 1/4W 5%
R509/510	50573140	22kΩ 1/4W 5%
R511/512	50573200	39kΩ 1/4W 5%
R513/514	50573200	39kΩ 1/4W 5%
R515/516	50573380	220kΩ 1/4W 5%
R517/518	50573060	10kΩ 1/4W 5%
R519/520	50572980	4.7kΩ 1/4W 5%
R521/522	50572780	680Ω 1/4W 5%
R523/524	50572780	680Ω 1/4W 5%
R525/526	50572800	1kΩ 1/4W 5%
R527/528		(not used)
R529/530	50572800	1kΩ 1/4W 5%
R531	50573300	100kΩ 1/4W 5%
R532	50572600	120Ω 1/4W 5%
R533	50572920	2.7kΩ 1/4W 5%
		VARIABLE RESISTORS
VR501/502	50534190	Semi-fixed, 500ΩB
VR503/504	50534190	Semi-fixed, 500ΩB
		COILS
L501/502	50566670	RECORD EQ, 2.4/1.5mH
L503/504	50566300	Trap, 3mH
		MISCELLANEOUS
--------	51670120	PC Bd., Trap Coil Mtg

11. BIAS OSCILLATOR

CIRCUIT REF.NO.	TEAC PARTS NO.	DESCRIPTION
------	51680292	PC Bd. Assy, BIAS OSCILLATOR UNIT
------	51670141	PC Bd., BIAS OSCILLATOR UNIT
		TRANSISTORS
Q551·552	50424450	2SC1226A-R
Q553	50424750	2SC1384-Q *or*
	50424910	2SC1384-R
		DIODE
D551	50422940	1N4006
		CARBON RESISTORS
R551·552	50574980	4.7kΩ 1/2W 5%
R553	50572580	100Ω 1/4W 5%
R554	50517860	2.2kΩ 1/2W 5%
R555·556	50574420	22Ω 1/2W 5%
R557	50572820	1kΩ 1/4W 5%
R558	50573140	22kΩ 1/4W 5%
		CAPACITORS
C551	50548130	Mylar 0.0047μF 50V
C552·553	50548300	Mylar 0.0033μF 50V
C554	50548740	Mylar 0.022μF 150V
C555	50544040	Mica 4200pF 250V 5%
C556	50554970	Elec. 0.47μF 50V
C557	50549920	Metalized Mylar 0.1μF 400V
C558	50554850	Elec. 22μF 6.3V
		VARIABLE RESISTOR
VR551	50539020	200ΩB 2W
		TRIMMER CAPACITORS
VC551·552	50547110	MAX. 80pF
		COILS
L551	50566720	Choke, 2.2mH
L552	50566581	Dummy Load, 3mH
		MISCELLANEOUS
K551	50610690	Relay, MY4-0 DC24V
T551	50563170	Coil, Oscillator
----	51670120	PC Bd., Oscillator Coil Mtg
----	51670150	PC Bd., VR Mtg

12. AMPL. STABILIZER UNIT

CIRCUIT REF.NO.	TEAC PARTS NO.	DESCRIPTION
-------	51680281	PC Bd. Assy, AMPL. STABILIZER UNIT
-------	51670131	PC Bd., AMPL. STABILIZER UNIT
		TRANSISTORS
Q401	50423800	2SD235-O
Q402	50423500	2SC734-Y
		DIODE
DZ401	50422980	Zener, 0Z9.1A
		RESISTORS
R401	50526310	Wire Wound 22Ω 2W
R402	50572900	Carbon 2.2kΩ 1/4W 5%
R403	50572940	Carbon 3.3kΩ 1/4W 5%
R404	50572980	Carbon 4.7kΩ 1/4W 5%
R405	50572840	Carbon 1.2kΩ 1/4W 5%
R406	50525810	Wire Wound 10Ω 2W
R407	50572840	Carbon 1.2kΩ 1/4W 5%
		ELEC. CAPACITORS
C401	50554380	220μF 35V
C402·403	50554630	100μF 35V
C404·405	50555590	220μF 50V
		MISCELLANEOUS
-------	55504320	Heat Sink, A

13. PLAY LINE AMPL. UNIT

A-5300

CIRCUIT REF.NO.	TEAC PARTS NO.	DESCRIPTION
-------	51680310	PC Bd. Assy, PLAY LINE AMPL. UNIT
-------	51670160	PC Bd., PLAY LINE AMPL. UNIT
		TRANSISTORS
Q651/652	50423770	2SC644-T
Q653/654	50424140	2SA572-YL
		CARBON RESISTORS
R651/652	50572940	3.3kΩ 1/4W 5%
R653/654	50573540	1MΩ 1/4W 5%
R655/656	50573200	39kΩ 1/4W 5%
R657/658	50572900	2.2kΩ 1/4W 5%
R659/660	50572900	2.2kΩ 1/4W 5%
R661/662	50572500	47Ω 1/4W 5%
R663/664	50573320	120kΩ 1/4W 5%

CIRCUIT REF.NO.	TEAC PARTS NO.	DESCRIPTION	
		CAPACITORS	
C651/652	50554350	Elec.	10μF 50V
C653/654	50554530	Elec.	4.7μF 25V
C655/656	50547440	Dip. Mica	100pF 50V
C657/658	50549420	Mylar	0.0027μF 50V
C659/660	50548320	Mylar	0.001μF 50V
C661/662	50554530	Elec.	4.7μF 25V
		VARIABLE RESISTORS	
VR651/652	50534230	Semi-fixed, 100kΩB	
		COILS	
L651/652	50566730	Choke, 1.2mH	
		MISCELLANEOUS	
-------	51670120	PC Bd., Choke Coil Mtg	

14. RECORD LINE AMPL. UNIT

A-5300

CIRCUIT REF.NO.	TEAC PARTS NO.	DESCRIPTION
-------	51680320	PC Bd. Assy, RECORD LINE AMPL. UNIT
-------	51670170	PC Bd., RECORD LINE AMPL. UNIT
		TRANSISTORS
Q701/702	50423770	2SC644-T
Q703/704	50424140	2SA572-YL
		CARBON RESISTORS
Q701/702	50573320	120kΩ 1/4W 5%
Q703/704	50572940	3.3kΩ 1/4W 5%
Q705/706	50573540	1MΩ 1/4W 5%
Q707/708	50573220	47kΩ 1/4W 5%
Q709/710	50572900	2.2kΩ 1/4W 5%
Q711/712	50572900	2.2kΩ 1/4W 5%

CIRCUIT REF.NO.	TEAC PARTS NO.	DESCRIPTION
Q713/714	50572540	68Ω 1/4W 5%
Q715/716	50573320	120kΩ 1/4W 5%
Q717/718	50573100	15kΩ 1/4W 5%
Q719/720	50572980	4.7kΩ 1/4W 5%
		CAPACITORS
C701/702	50554040	Elec. 10μF 25V
C703/704	50554530	Elec. 4.7μF 25V
C705/706	50547580	Dip. Mica 82pF 50V
C707/708	50548120	Mylar 0.0015μF 50V
C709/710	50554530	Elec. 4.7μF 25V
C711/712	50548450	Mylar 0.0022μF 50V
		VARIABLE RESISTORS
VR701/702	50534230	100kΩB

15. DOLBY CAL UNIT

A-5500

CIRCUIT REF.NO.	TEAC PARTS NO.	DESCRIPTION
	51680200	PC Bd. Assy, DOLBY CAL UNIT
	51670080	PC Bd., DOLBY CAL UNIT
	TRANSISTOR	
Q601	50424340	2SC1000-BL
	DIODE	
D601	50422940	1N4006
	CARBON RESISTORS	
R601∿603	50573120	18kΩ 1/4W 5%
R604	50573280	82kΩ 1/4W 5%
R605	50572860	1.5kΩ 1/4W 5%
R606	50573000	5.6kΩ 1/4W 5%
R607	50572560	82Ω 1/4W 5%
R608	50573040	8.2kΩ 1/4W 5%
	CAPACITORS	
C601∿603	50548020	Mylar 0.01μF 50V
C604	50547580	Dip. Mica 82pF 50V
C605	50554050	Elec. 10μF 16V
C606	50554540	Elec. 1μF 50V
	VARIABLE RESISTORS	
VR601∿604	50534230	Semi-fixed, 100kΩB
VR605	50534190	Semi-fixed, 500ΩB
	MISCELLANEOUS	
K601	50611230	Relay, DC24V

16. DOLBY DECODER UNIT

A-5500

CIRCUIT REF.NO.	TEAC PARTS NO.	DESCRIPTION
------	51680331	PC Bd. Assy, DOLBY DECODER UNIT
------	51670180	PC Bd., DOLBY DECODER UNIT
		TRANSISTORS
Q251	50423770	2SC644-T
Q252	50423770	2SC644-T
Q253	50423650	2SA494-Y
Q254	50423770	2SC644-T
Q255	50423770	2SC644-T
Q256	57240981	FET, 2SK30A-DA *or*
	57240991	FET, 2SK30A-DB
Q257	50423770	2SC644-T
Q258	50424140	2SA572-YL
Q259	50424600	2SC828-S
		DIODES
D251	50422440	S3016-R
D252	50422440	S3016-R
D253	50422440	S3016-R
D254	50422130	1N60
D255	50422440	S3016-R
DZ251	50422640	Zener, 02Z7.5A
		CARBON RESISTORS
R251	50573460	470kΩ 1/4W 5%
R252	50573240	56kΩ 1/4W 5%
R253	50573000	5.6kΩ 1/4W 5%
R254	50572780	680Ω 1/4W 5%
R255	50573240	56kΩ 1/4W 5%
R256	50572580	100Ω 1/4W 5%
R257	50573020	6.8kΩ 1/4W 5%
R258	50572960	3.9kΩ 1/4W 5%
R259	50572820	1kΩ 1/4W 5%
R260	50572660	220Ω 1/4W 5%
R261	50573180	33kΩ 1/4W 5%
R262	50529970	150kΩ 1/4W 2%
R263	50529940	180kΩ 1/4W 2%
R264	50573230	51kΩ 1/4W 5%
R265	50573140	22kΩ 1/4W 5%
R266	50572980	4.7kΩ 1/4W 5%
R267	50573000	5.6kΩ 1/4W 5%
R268	50529970	150kΩ 1/4W 2%
R269	50572980	4.7kΩ 1/4W 5%
R270	50573180	33kΩ 1/4W 5%
R271	50573400	270kΩ 1/4W 5%
R272	50573200	39kΩ 1/4W 5%
R273	50529960	3.3kΩ 1/4W 1%
R274	50572860	1.5kΩ 1/4W 5%
R275	50572820	1kΩ 1/4W 5%
R276	50573160	27kΩ 1/4W 5%
R277	50572960	3.9kΩ 1/4W 5%
R278	50573580	1.5MΩ 1/4W 5%
R279	50573540	1MΩ 1/4W 5%
R280	50573100	15kΩ 1/4W 5%
R281	50573060	10kΩ 1/4W 5%
R282	50573040	8.2kΩ 1/4W 5%
R283	50573180	33kΩ 1/4W 5%
R284	50573040	8.2kΩ 1/4W 5%
R285	50573040	8.2kΩ 1/4W 5%
R286	50573320	120kΩ 1/4W 5%
R287	50573220	47kΩ 1/4W 5%
R288	50572920	2.7kΩ 1/4W 5%
R289	50572820	1kΩ 1/4W 5%
R290	50572460	33Ω 1/4W 5%
R291	50572500	47Ω 1/4W 5%
R292	50573100	15kΩ 1/4W 5%
R293	50573400	270kΩ 1/4W 5%
R294	50573400	270kΩ 1/4W 5%
R295	50573380	220kΩ 1/4W 5%
		CAPACITORS
C251	50554540	Elec. 1μF 50V
C252	50543440	Polyst. 820pF 50V 10%
C253	50543980	Polyst. 1000pF 50V 5%
C254	50543400	Polyst. 100pF 50V 10%
C255	50554050	Elec. 10μF 16V
C256	50554050	Elec. 10μF 16V
C257	50554050	Elec. 10μF 16V
C258	50554030	Elec. 47μF 6.3V
C259	50554050	Elec. 10μF 16V
C260	50554540	Elec. 1μF 50V
C261	50594820	Mylar 0.0056μF 50V 1%
C262	50594840	Mylar 0.027μF 50V 1%
C263	50594810	Mylar 0.0047μF 50V 1%
C264	50554050	Elec. 10μF 16V
C265	50548040	Mylar 0.1μF 50V 10%
C266	50554010	Elec. 47μF 16V
C267	50548040	Mylar 0.1μF 50V 10%
C268	50554050	Elec. 10μF 16V
C269	50546562	Dip. Tant. 10μF 16V
C270	50549280	Mylar 0.1μF 50V 5%
C271	50548040	Mylar 10μF 16V 10%
C272	50548830	Metalized Mylar 0.33μF 50V 10%
C273	50554050	Elec. 10μF 16V
		VARIABLE RESISTORS
VR251	50534220	Semi-fixed, 10kΩB
VR252	50534200	Semi-fixed, 1kΩB
		COILS
L251	50566660	Fixed Choke, 38mH
L252	50566300	Trap, 3mH

17. DOLBY ENCODER UNIT

A-5500

CIRCUIT REF.NO.	TEAC PARTS NO.	DESCRIPTION
-----	51680340	PC Bd. Assy, DOLBY ENCODER UNIT
-----	51670190	PC Bd., DOLBY ENCODER UNIT
	TRANSISTORS	
Q301	50423770	2SC644-T
Q302	50423770	2SC644-T
Q303	50423650	2SA494-Y
Q304	50423770	2SC644-T
Q305	50423770	2SC644-T
Q306	57240981	FET, 2SK30A-DA *or*
	57240991	FET, 2SK30A-DB
Q307	50423770	2SC644-T
Q308	50424140	2SA572-YL
Q309	50424600	2SA828-S
	DIODES	
D301	50422440	S3016-R
D302	50422440	S3016-R
D303	50422440	S3016-R
D304	50422130	1N60
D305	50422440	S3016-R
DZ301	50422640	Zener, 02Z7.5A
	CARBON RESISTORS	
R301	50573460	470kΩ 1/4W 5%
R302	50573240	56kΩ 1/4W 5%
R303	50573000	5.6kΩ 1/4W 5%
R304	50572780	680Ω 1/4W 5%
R305	50573240	56kΩ 1/4W 5%
R306	50572580	100Ω 1/4W 5%
R307	50573020	6.8kΩ 1/4W 5%
R308	50572960	3.9kΩ 1/4W 5%
R309	50572820	1kΩ 1/4W 5%
R310	50572660	220Ω 1/4W 5%
R311	50573180	33kΩ 1/4W 5%
R312	50529970	150kΩ 1/4W 2%
R313	50529940	180kΩ 1/4W 2%
R314	50573230	51kΩ 1/4W 5%
R315	50573140	22kΩ 1/4W 5%
R316	50572980	4.7kΩ 1/4W 5%
R317	50573000	5.6kΩ 1/4W 5%
R318	50529970	150kΩ 1/4W 2%
R319	50572980	4.7kΩ 1/4W 5%
R320	50573180	33kΩ 1/4W 5%
R321	50573400	270kΩ 1/4W 5%
R322	50573200	39kΩ 1/4W 5%
R323	50529960	3.3kΩ 1/4W 5%
R324	50572860	1.5kΩ 1/4W 5%
R325	50572820	1kΩ 1/4W 5%
R326	50573160	27kΩ 1/4W 5%
R327	50572960	3.9kΩ 1/4W 5%
R328	50573580	1.5MΩ 1/4W 5%
R329	50573540	1MΩ 1/4W 5%
R330	50573100	15kΩ 1/4W 5%
R331	50573060	10kΩ 1/4W 5%
R332	50573040	8.2kΩ 1/4W 5%
R333	50573180	33kΩ 1/4W 5%
R334	50573040	8.2kΩ 1/4W 5%
R335	50573040	8.2kΩ 1/4W 5%
R336	50573320	120kΩ 1/4W 5%
R337	50573220	47kΩ 1/4W 5%
R338	50572920	2.7kΩ 1/4W 5%
R339	50572820	1kΩ 1/4W 5%
R340	50572460	33Ω 1/4W 5%
R341	50572500	47Ω 1/4W 5%
R342	50573100	15kΩ 1/4W 5%
R343	50573400	270kΩ 1/4W 5%
R344	50573400	270kΩ 1/4W 5%
R345	50573380	220kΩ 1/4W 5%
	CAPACITORS	
C301	50554540	Elec. 1μF 50V
C302	50544070	Polyst. 2000pF 50V 5%
C303	50543990	Polyst. 1800pF 50V 5%
C304	50543980	Polyst. 1000pF 50V 5%
C305	50554050	Elec. 10μF 16V
C306	50554050	Elec. 10μF 16V
C307	50554050	Elec. 10μF 16V
C308	50554030	Elec. 47μF 6.3V
C309	50554050	Elec. 10μF 16V
C310	50554540	Elec. 1μF 50V
C311	50594820	Mylar 0.0056μF 50V 1%
C312	50594840	Mylar 0.027μF 50V 1%
C313	50594810	Mular 0.0047μF 50V 1%
C314	50554050	Elec. 10μF 16V
C315	50548040	Mylar 0.1μF 50V 10%
C316	50554010	Elec. 47μF 16V
C317	50548040	Mylar 0.1μF 50V 10%
C318	50554050	Elec. 10μF 16V
C319	50546562	Dip. Tant. 10μF 16V
C320	50549280	Mylar 0.1μF 50V 5%
C321	50548040	Mylar 0.1μF 50V 10%
C322	50548830	Metalized Mylar 0.33μF 50V 10%
C323	50554050	Elec. 10μF 16V
C324	50548930	Mylar 0.0068μF 50V 5%
	VARIABLE RESISTORS	
VR301	50534220	Semi-fixed, 10kΩB
VR302	50534200	Semi-fixed, 1kΩB
	COILS	
L301	57244060	Choke (Fixed), 65mH 5%
L302	57244050	Choke (Adjustable), 39mH

18. MISCELLANEOUS

NOT LISTED ELSEWHERE.

The following listing is for electrical components separate from the PC Boards.

CIRCUIT REF.NO.	TEAC PARTS NO.	DESCRIPTION
R805/806	50573290	R, Carbon 91kΩ 1/4W 5% (*A-5300* only)
R807/808	50573200	R, Carbon 39kΩ 1/4W 5% (*A-5300* only)
R809/810	50572920	R, Carbon 2.7kΩ 1/4W 5%
R813/814	50573260	R, Carbon 68kΩ 1/4W 5% (*A-5500* only)
C801	50543340	C, Polyst. 330pF 50V 10%

DOLBY DECODER

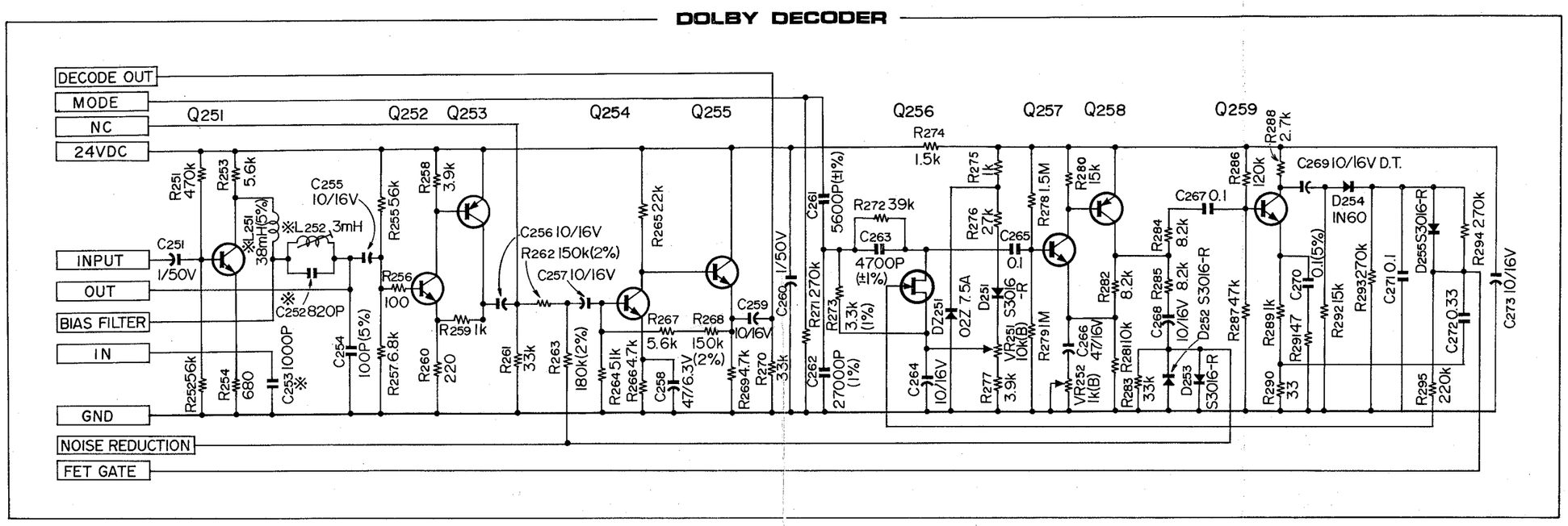

DOLBY ENCODER

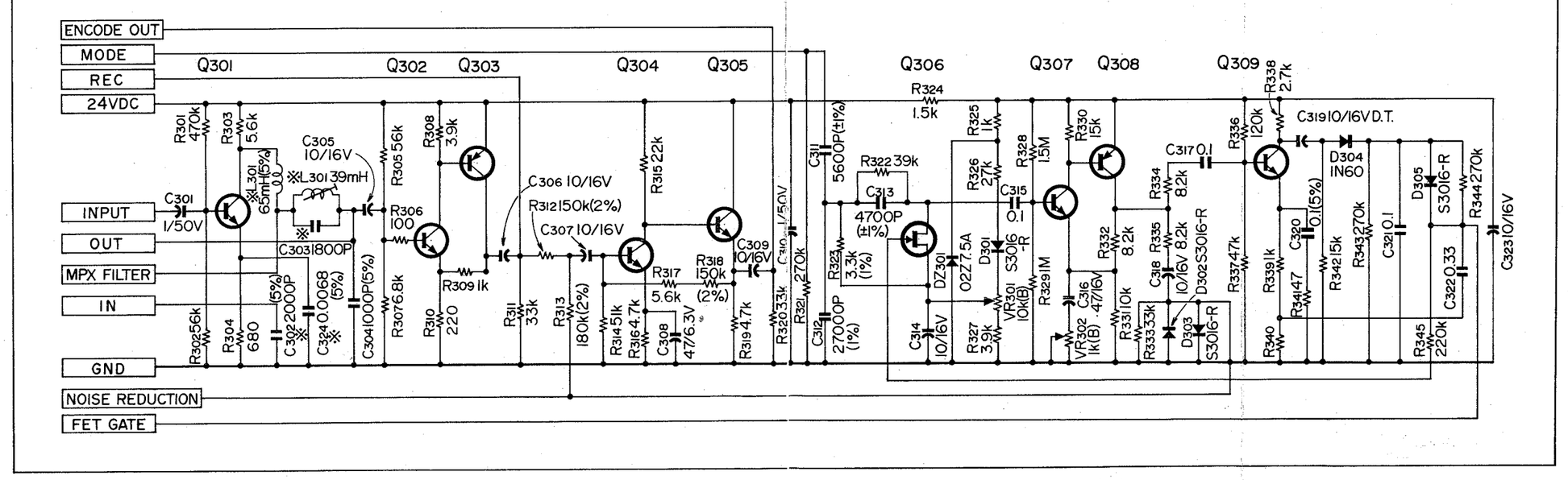

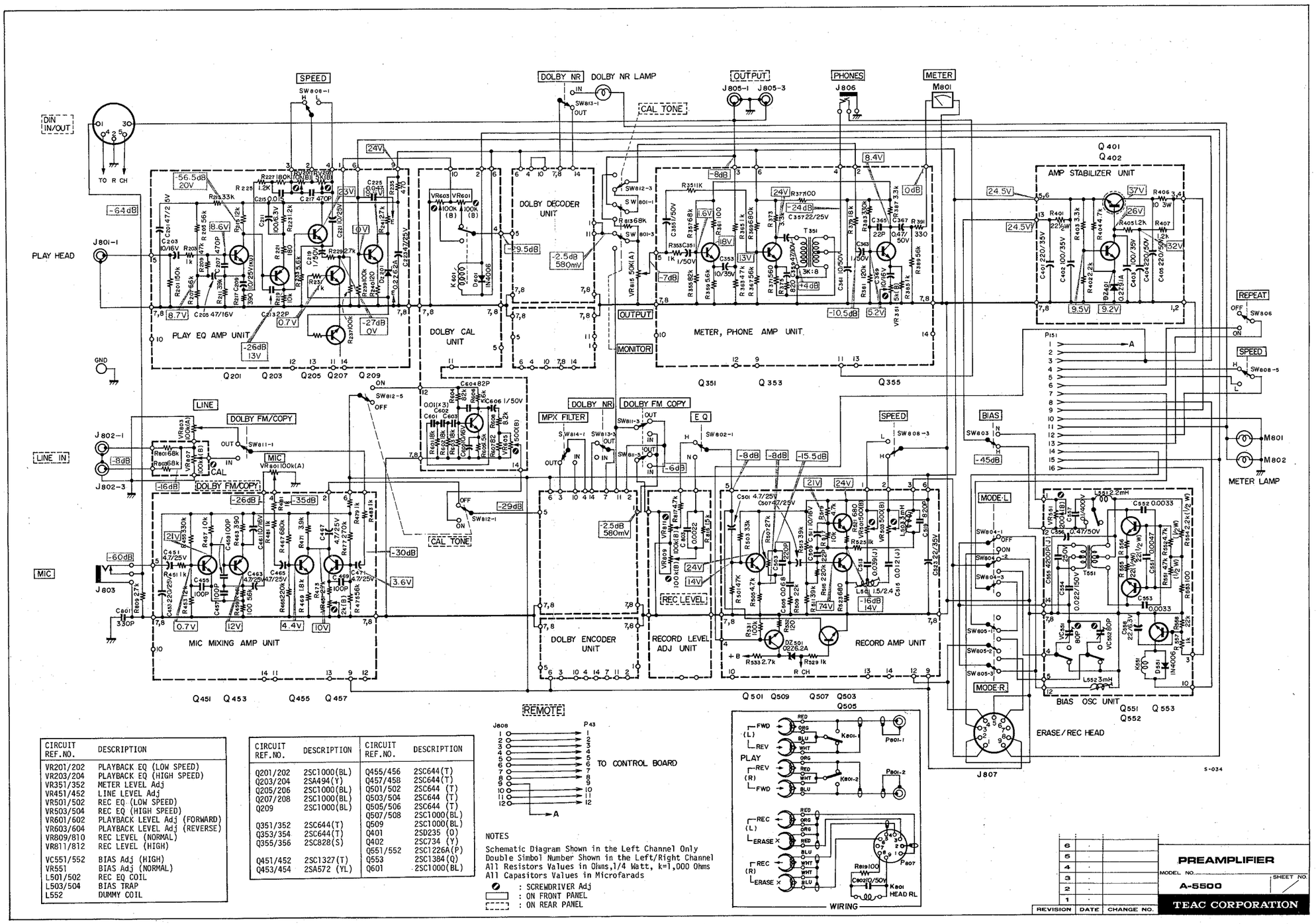

CIRCUIT REF.NO.	DESCRIPTION
VR201/202	PLAYBACK EQ (LOW SPEED)
VR203/204	PLAYBACK EQ (HIGH SPEED)
VR351/352	METER LEVEL Adj
VR451/452	LINE LEVEL Adj
VR501/502	REC EQ (LOW SPEED)
VR503/504	REC EQ (HIGH SPEED)
VR601/602	PLAYBACK LEVEL Adj (FORWARD)
VR603/604	PLAYBACK LEVEL Adj (REVERSE)
VR809/810	REC LEVEL (NORMAL)
VR811/812	REC LEVEL (HIGH)
VC551/552	BIAS Adj (HIGH)
VR551	BIAS Adj (NORMAL)
L501/502	REC EQ COIL
L503/504	BIAS TRAP
L552	DUMMY COIL

CIRCUIT REF.NO.	DESCRIPTION	CIRCUIT REF.NO.	DESCRIPTION
Q201/202	2SC1000(BL)	Q455/456	2SC644(T)
Q203/204	2SA494(Y)	Q457/458	2SC644(T)
Q205/206	2SC1000(BL)	Q501/502	2SC644 (T)
Q207/208	2SC1000(BL)	Q503/504	2SC644 (T)
Q209	2SC1000(BL)	Q505/506	2SC644 (T)
		Q507/508	2SC1000(BL)
Q351/352	2SC644(T)	Q509	2SC1000(BL)
Q353/354	2SC644(T)	Q401	2SD235 (O)
Q355/356	2SC828(S)	Q402	2SC734 (Y)
		Q551/552	2SC1226A(P)
Q451/452	2SC1327(T)	Q553	2SC1384(Q)
Q453/454	2SA572 (YL)	Q601	2SC1000(BL)

NOTES

Schematic Diagram Shown in the Left Channel Only
Double Simbol Number Shown in the Left/Right Channel
All Resistors Values in Ohms,1/4 Watt, k=1,000 Ohms
All Capasitors Values in Microfarads

: SCREWDRIVER Adj
: ON FRONT PANEL
: ON REAR PANEL

REVISION	DATE	CHANGE NO.
6		
5		
4		
3		
2		
1		

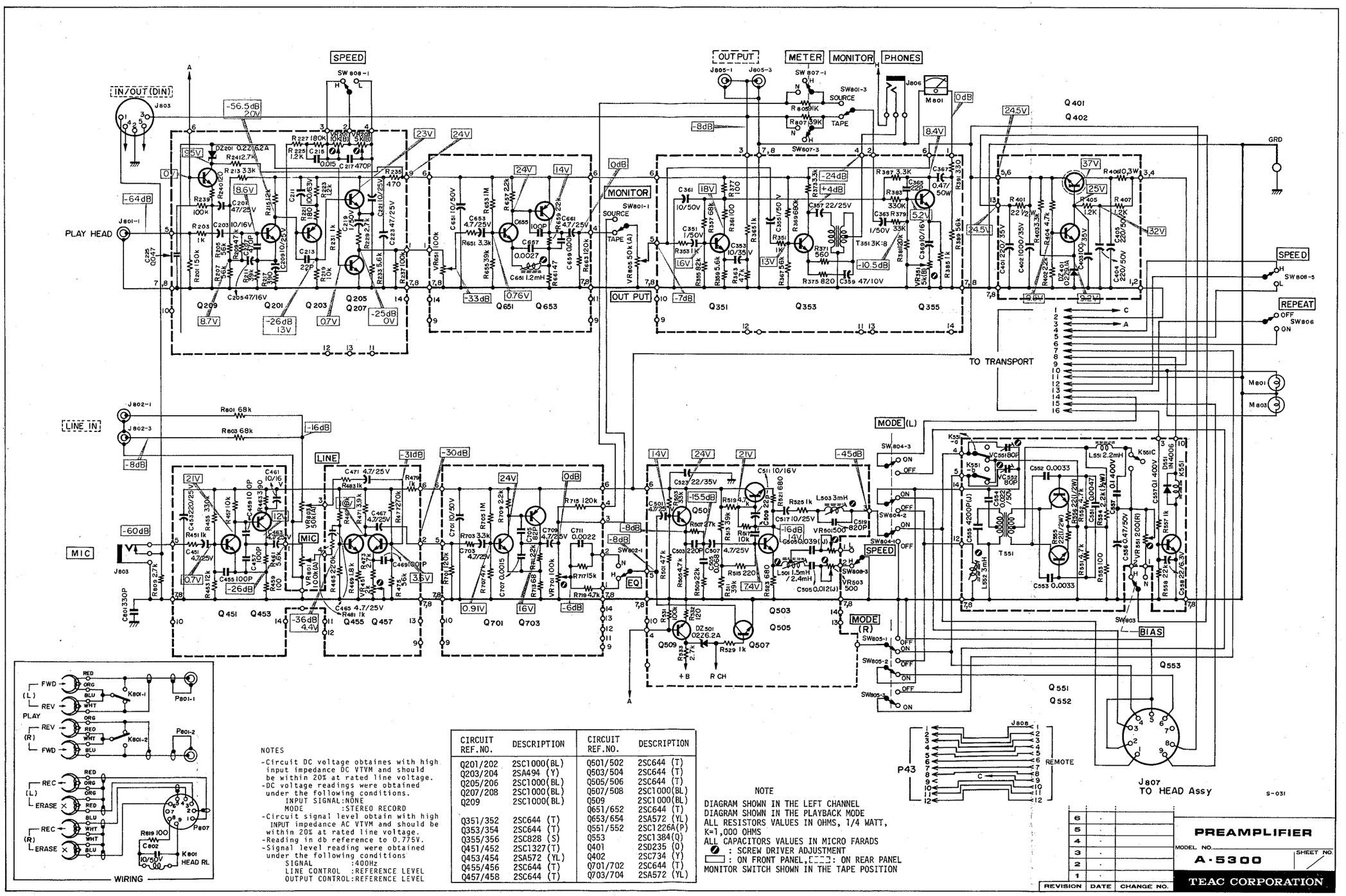

NOTES

- Circuit DC voltage obtaines with high input impedance DC VTVM and should be within 20% at rated line voltage.
- DC voltage readings were obtained under the following conditions.
  INPUT SIGNAL: NONE
  MODE : STEREO RECORD
- Circuit signal level obtain with high INPUT impedance AC VTVM and should be within 20% at rated line voltage.
- Reading in db reference to 0.775V.
- Signal level reading were obtained under the following conditions
  SIGNAL : 400Hz
  LINE CONTROL : REFERENCE LEVEL
  OUTPUT CONTROL: REFERENCE LEVEL

CIRCUIT REF.NO.	DESCRIPTION	CIRCUIT REF.NO.	DESCRIPTION
Q201/202	2SC1000(BL)	Q501/502	2SC644 (T)
Q203/204	2SA494 (Y)	Q503/504	2SC644 (T)
Q205/206	2SC1000(BL)	Q505/506	2SC644 (T)
Q207/208	2SC1000(BL)	Q507/508	2SC1000(BL)
Q209	2SC1000(BL)	Q509	2SC1000(BL)
		Q651/652	2SC644 (T)
Q351/352	2SC644 (T)	Q653/654	2SA572 (YL)
Q353/354	2SC644 (T)	Q551/552	2SC1226A(P)
Q355/356	2SC828 (S)	Q553	2SC1384(Q)
Q451/452	2SC1327(T)	Q401	2SD235 (O)
Q453/454	2SA572 (YL)	Q402	2SC734 (Y)
Q455/456	2SC644 (T)	Q701/702	2SC644 (T)
Q457/458	2SC644 (T)	Q703/704	2SA572 (YL)

NOTE

DIAGRAM SHOWN IN THE LEFT CHANNEL
DIAGRAM SHOWN IN THE PLAYBACK MODE
ALL RESISTORS VALUES IN OHMS, 1/4 WATT, K=1,000 OHMS
ALL CAPACITORS VALUES IN MICRO FARADS
⊘ : SCREW DRIVER ADJUSTMENT
▭ : ON FRONT PANEL, ▭▭▭: ON REAR PANEL
MONITOR SWITCH SHOWN IN THE TAPE POSITION

51031460
51031470

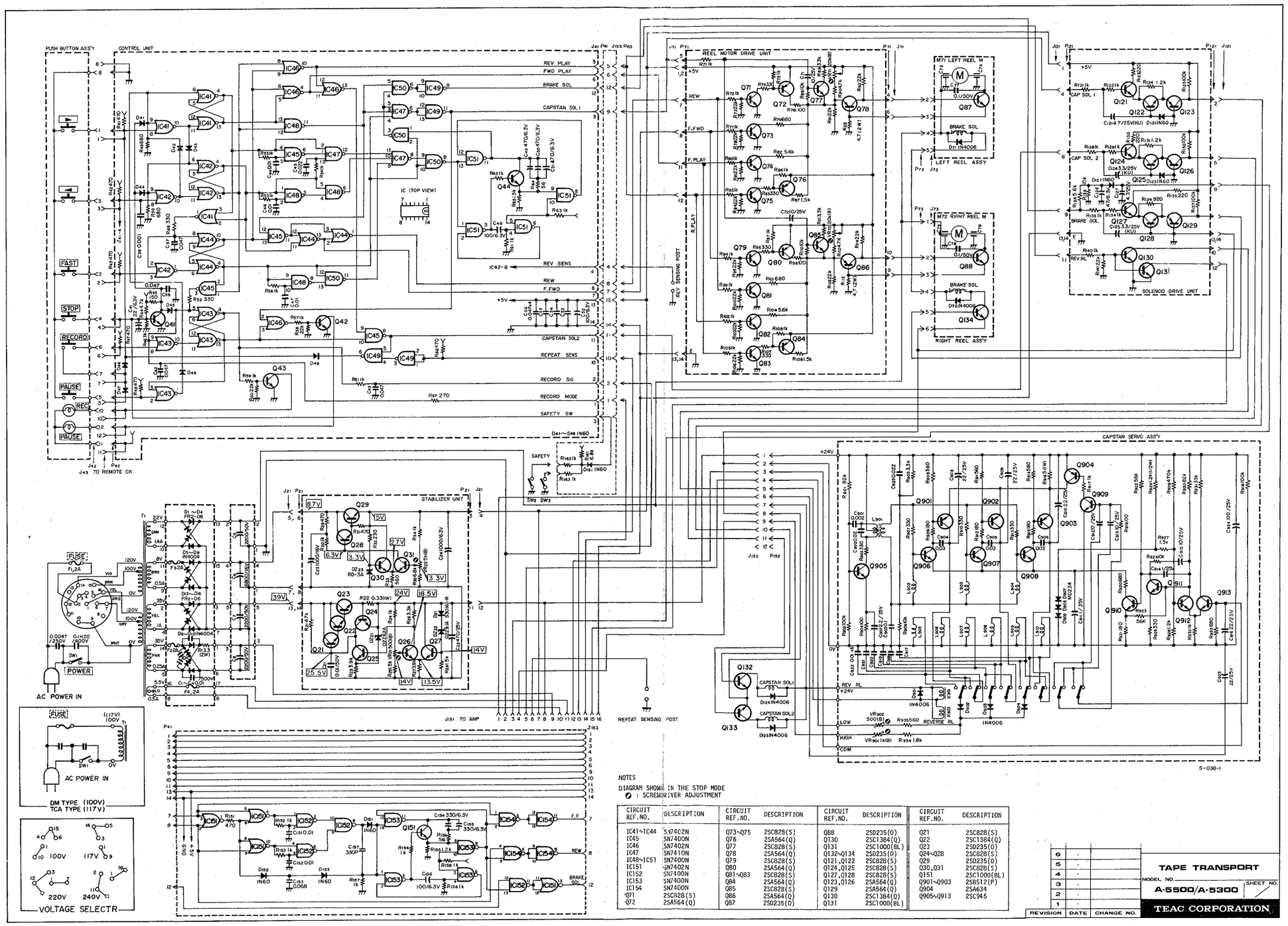

NOTES

DIAGRAM SHOWN IN THE STOP MODE

Ø : SCREWDRIVER ADJUSTMENT

CIRCUIT REF.NO.	DESCRIPTION	CIRCUIT REF.NO.	DESCRIPTION	CIRCUIT REF.NO.	DESCRIPTION	CIRCUIT REF.NO.	DESCRIPTION
IC41~IC44	SN7402N	Q73~Q75	2SC828(S)	Q88	2SD235(O)	Q21	2SC828(S)
IC45	SN7400N	Q76	2SA564(Q)	Q130	2SC1384(Q)	Q22	2SC1384(Q)
IC46	SN7402N	Q77	2SC828(S)	Q131	2SC1000(BL)	Q23	2SD235(O)
IC47	SN7410N	Q78	2SA564(Q)	Q132~Q134	2SD235(O)	Q24~Q28	2SC828(S)
IC48~IC51	SN7400N	Q79	2SC828(S)	Q121,Q122	2SC828(S)	Q29	2SD235(O)
IC151	SN7402N	Q80	2SA564(Q)	Q124,Q125	2SC828(S)	Q30,Q31	2SC828(S)
IC152	SN7400N	Q81~Q83	2SC828(S)	Q127,Q128	2SC828(S)	Q151	2SC1000(BL)
IC153	SN7400N	Q84	2SA564(Q)	Q129,Q126	2SA564(Q)	Q901~Q903	2SB512(P)
IC154	SN7400N	Q85	2SC828(S)	Q129	2SA564(Q)	Q904	2SA634
Q71	2SC828(S)	Q86	2SA564(Q)	Q130	2SC1384(Q)	Q905~Q913	2SC945
Q72	2SA564(Q)	Q87	2SD235(O)	Q131	2SC1000(BL)		

REVISION	DATE	CHANGE NO.
6		
5		
4		
3		
2		
1		

TAPE TRANSPORT

MODEL NO. A-5500/A-5300

SHEET NO.

TEAC CORPORATION

A-5500 PARTS LOCATION & WIRING DIAGRA

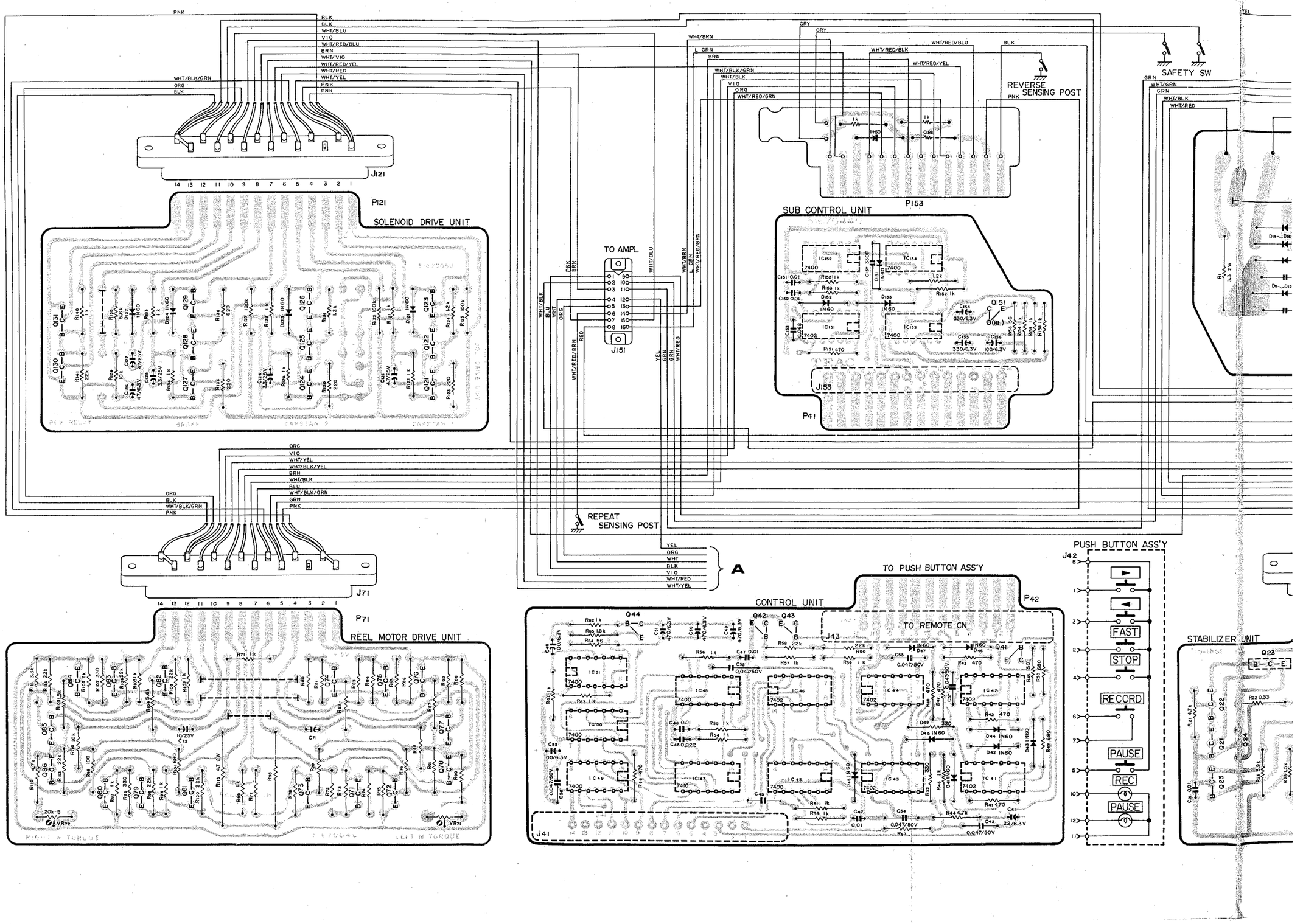

DIAGRAM (Foil side of the board) **TAPE TRANSPORT**

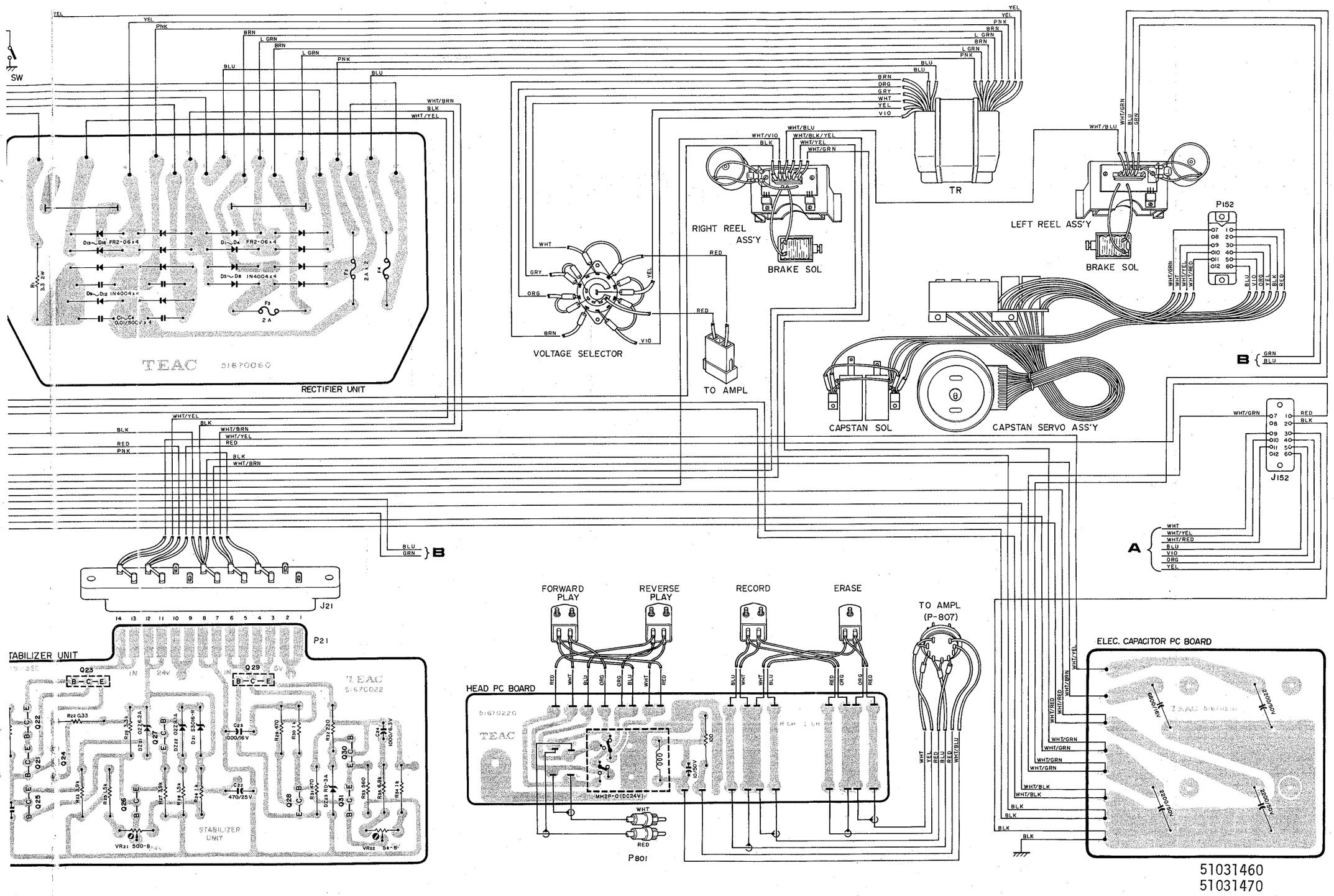

51031460
51031470

A-5500 PARTS LOCATION & WIRING DIAGRAM (Fc

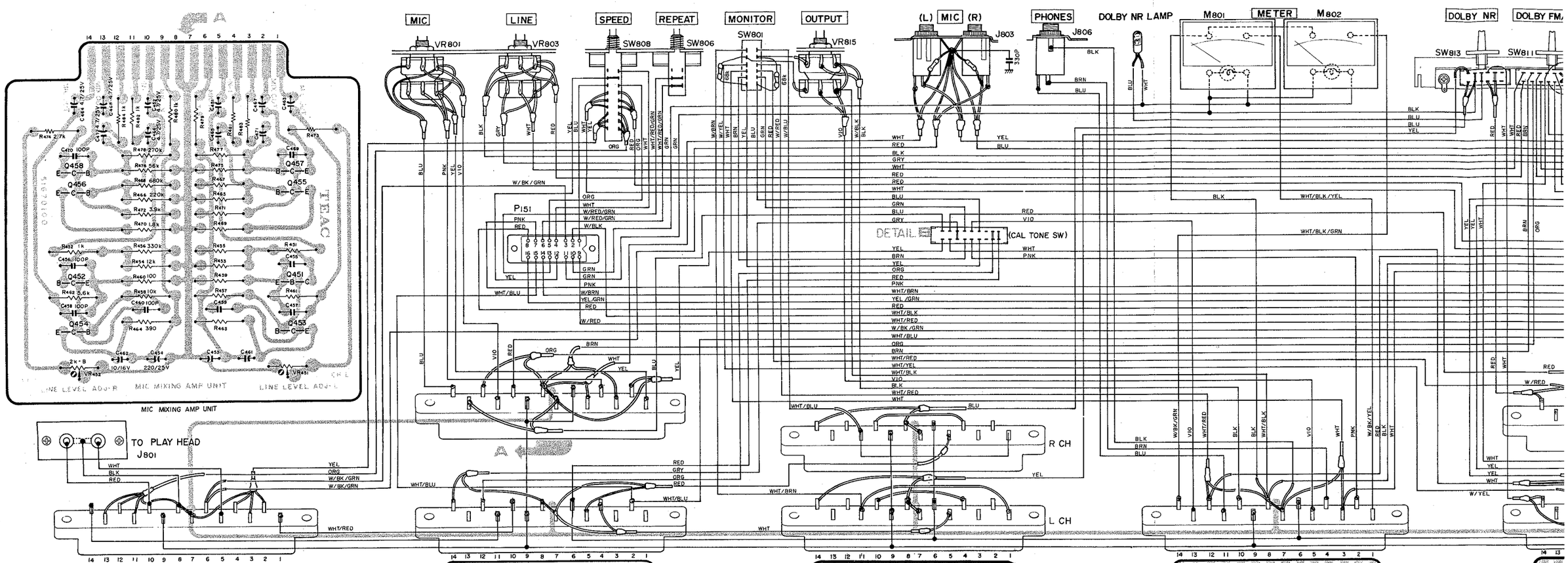

DIAGRAM (Foil side of the board)

PREAMPLIFIER

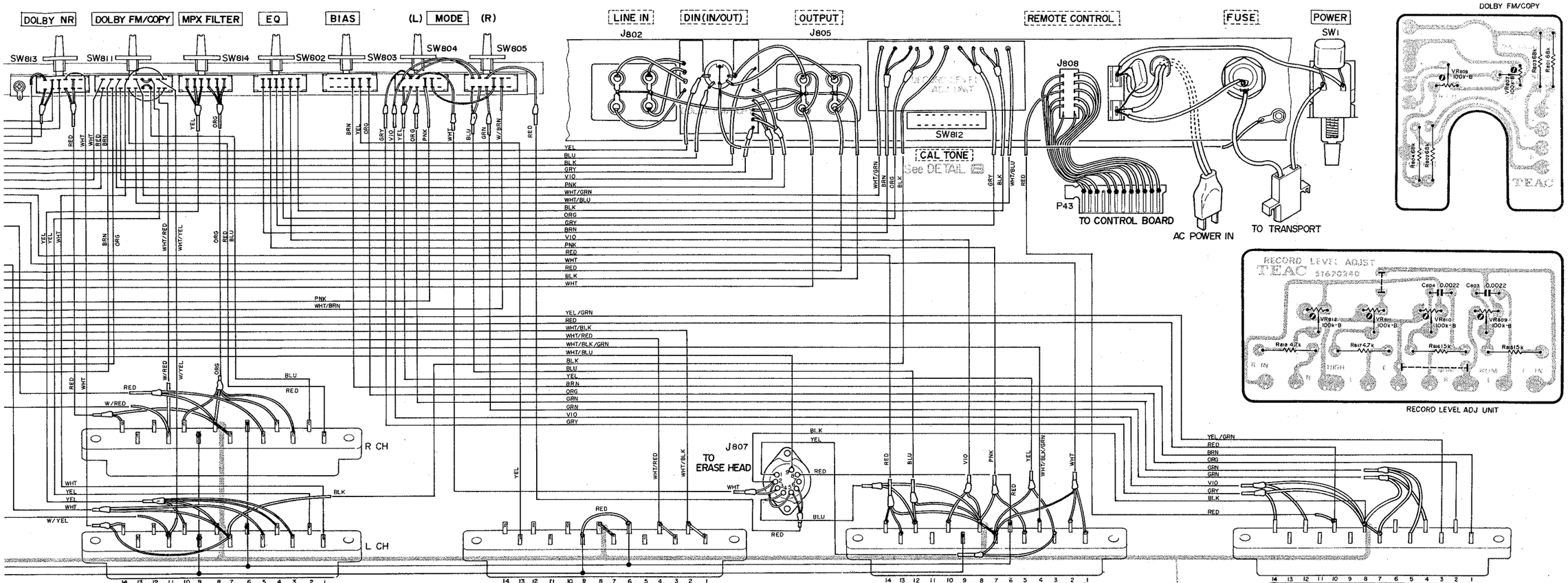

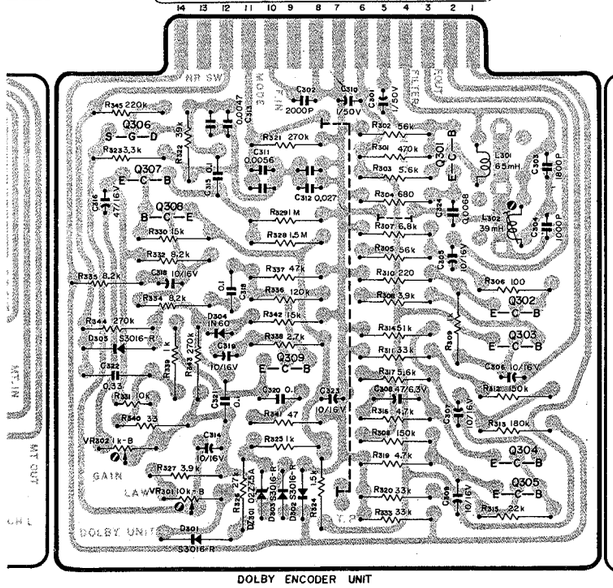

DOLBY ENCODER UNIT

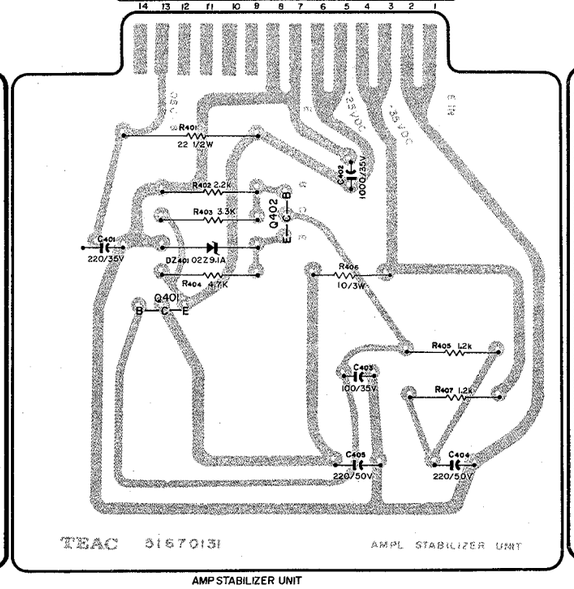

AMP STABILIZER UNIT

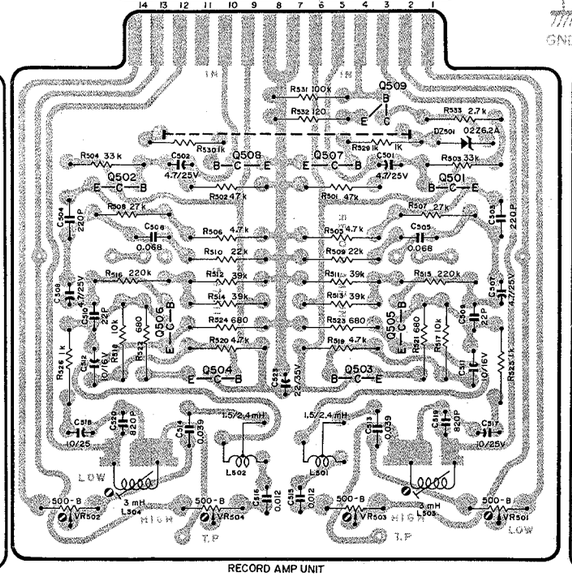

RECORD AMP UNIT

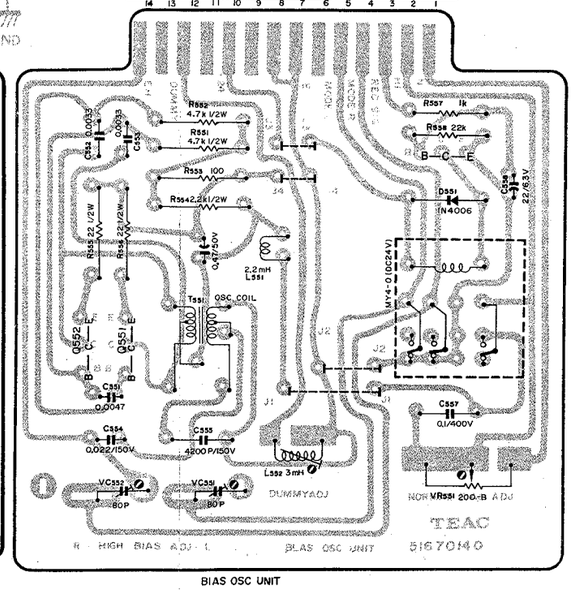

BIAS OSC UNIT