Service
Service
Service

Service Manual

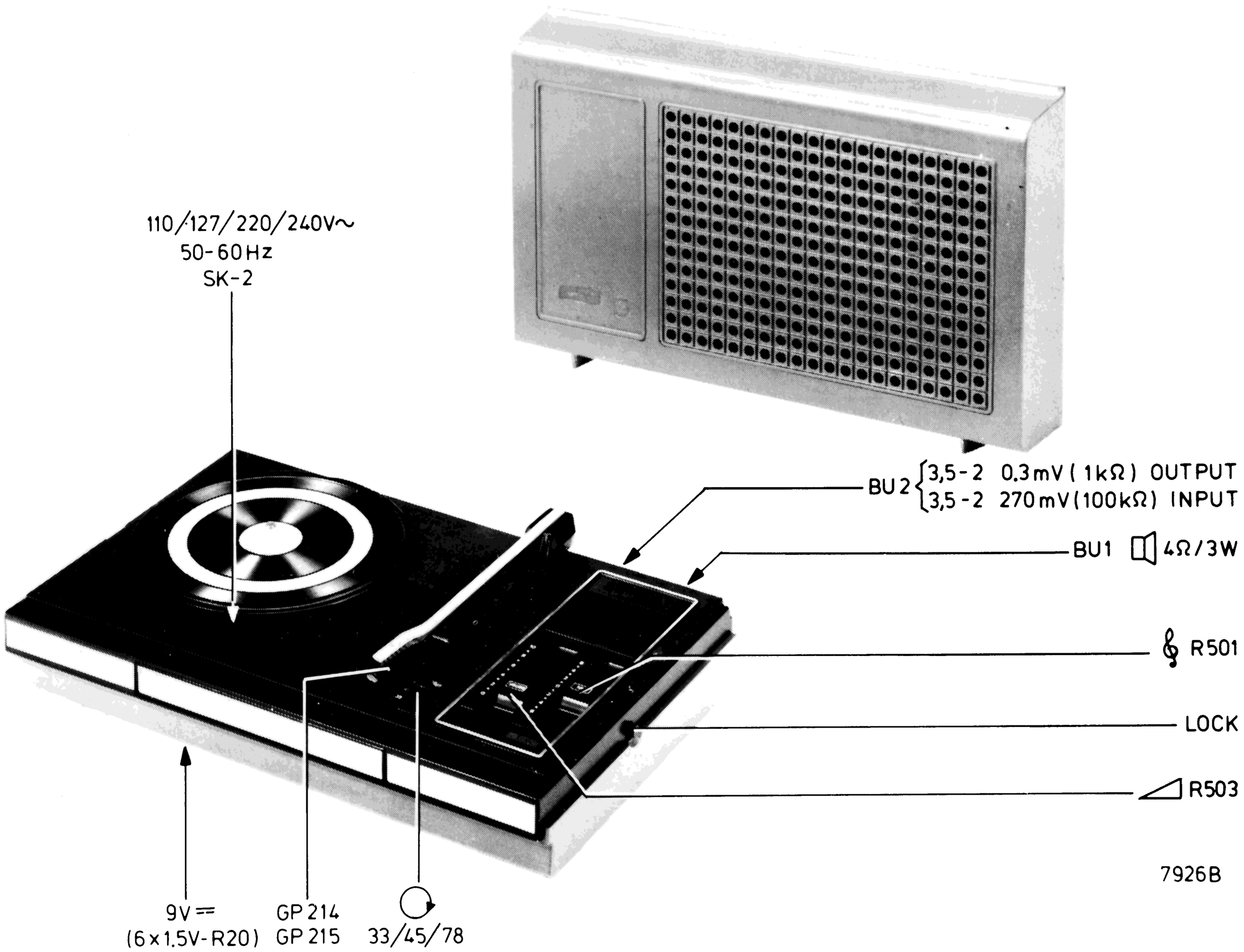

Safety regulations require that the set be restored to its original condition and that parts which are identical with those specified, be used.

Documentation Technique Service Dokumentation Documentazione di Servizio Huolte-Ohje Manual de Servicio Manual de Serviço

CS54174

Subject to modification

4822 726 11603

Printed in The Netherlands

PHILIPS

MISC	SK2	TS451	F462	TS452	M	T468	SK1	D474…476	BU2	TS401	D405	TS402,403	TS404a,b	BU1	S426
C	696	601	681	604	603	602	605	606	607
R	566…568,572,569	570	571	501…503	507	504	505	509	506	512	510	511	508	513	514

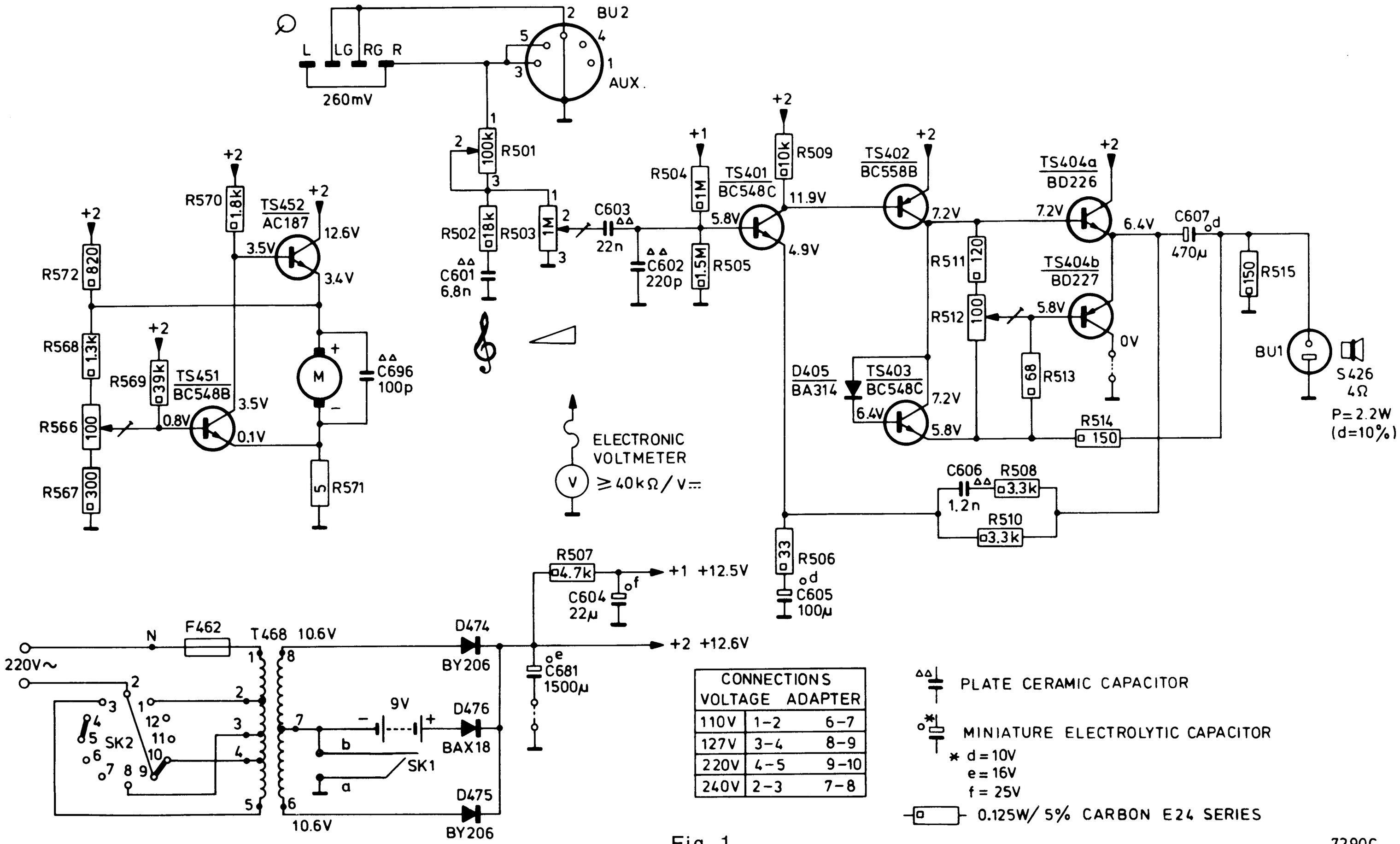

CONNECTIONS VOLTAGE	ADAPTER	
110V	1–2	6–7
127V	3–4	8–9
220V	4–5	9–10
240V	2–3	7–8

Fig. 1

- TS -		
TS401	BC548C	5322 130 44196
TS402	BC558B	5322 130 44197
TS403	BC548C	5322 130 44196
TS404a TS404b	BD226 matched BD227 pair	4822 130 41075
TS451	BC548B	4822 130 40937
TS452	AC187	5322 130 40314

- D -		
D405	BA314	4822 130 30879
D474,475	BY206	4822 130 30839
D476	BAX18	5322 130 34121

- R -		
R501	Potm. 100kΩ lin	4822 105 10156
R503	Potm. 1MΩ log	4822 105 10239
R512	Potm. 100Ω	4822 100 10075
R566	Potm. 100Ω	4822 100 10075
R571	Coilresistor 5Ω	4822 157 50568

- Miscellaneous -		
M		4822 361 70264
S426	AD7091/X4speaker	4822 240 10021
SK1a		4822 290 80225
SK1b		4822 290 80226
F462	Fuse (thermal)	4822 252 20007
T468	Mains transformer	4822 145 20151

CS54175

MISC	TS401	D405.TS402÷404a-b	SK2 D474÷476. TS451. 452	PU	SK1 BU2 T468 M BU1 F462
C	604.602.605 601.606 603	607	681		
R	506 505 504 502.507÷510 501.503.	511 512 513.514.515.567.569	566.570.571 572.568		

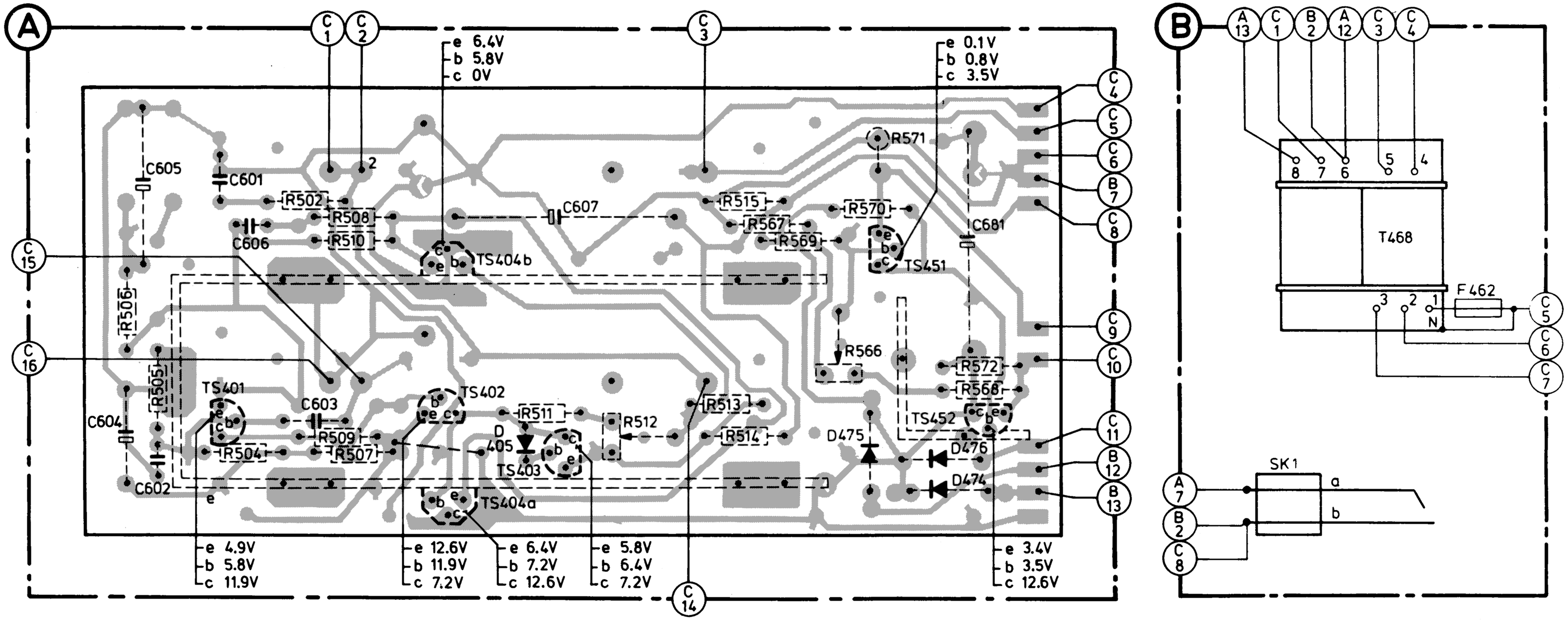

Fig. 2

51	4822 402 60409
52	4822 492 62038
53	4822 325 80115
54	4822 325 60117
55	4822 267 20161
56	4822 290 30174
57 S-version	4822 444 20189
57 X-version	4822 444 20191
58	4822 264 30041
59 S-version	4822 444 20192
59 X-version	4822 444 20193
60	4822 498 60333
61	4822 290 30096
62	4822 401 10452
63	4822 268 20032
64 (Tone)	4822 411 60464
64 (Volume)	4822 411 60463
65	4822 454 30238
66	4822 402 60518
67	4822 402 60517
68	4822 492 31089
69 S-version	4822 444 50252
69 X-version	4822 444 50253
70	4822 462 40016
71	4822 492 61688
72	4822 492 61902
73 S-version	4822 444 60333
73 X-version	4822 444 60334

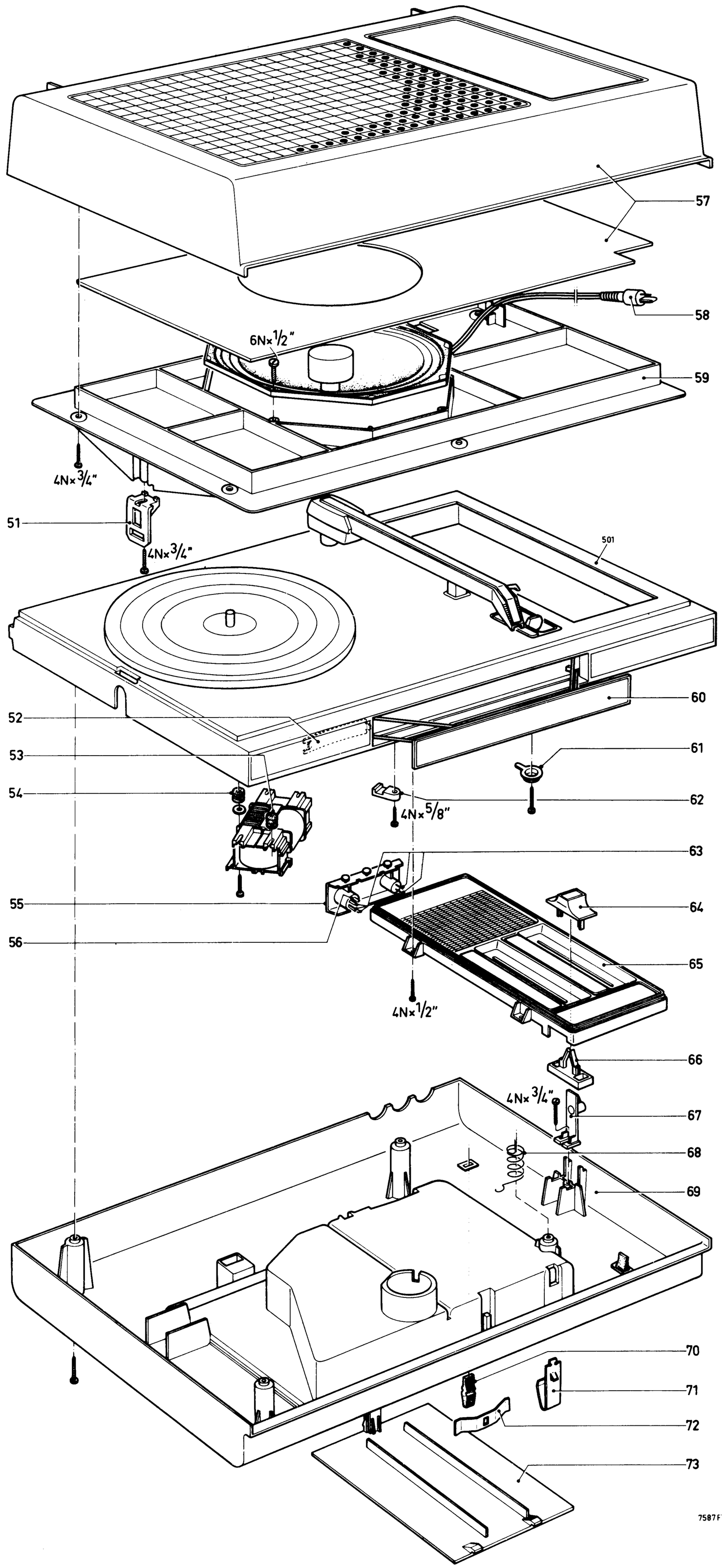

Fig. 3