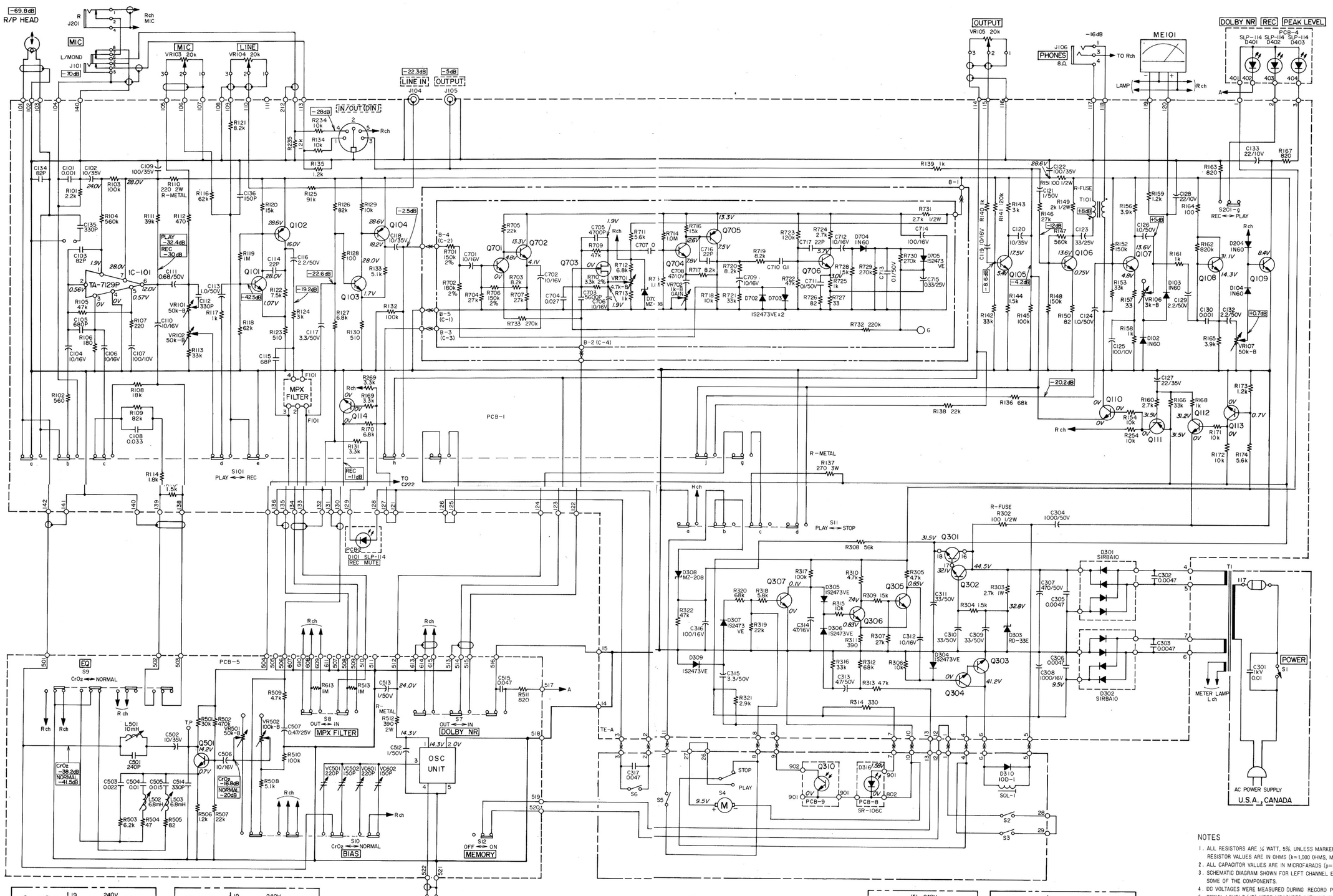

Q101,Q304	2SC1313	Q109	2SC1646
Q102,Q104,Q111,Q705	2SA823	Q301	2SD361
Q103,Q105,Q106,Q107,Q305 Q306,Q307,Q701,Q702,Q704 Q706	2SC1648	Q302	2SC1648LN
		Q303	2SD330
		Q501	2SC1312
		Q703	2SK30
Q108,Q110,Q112,Q113	2SC1740	Q310	PH101
Q114	2SC1383		

NOTES

1. ALL RESISTORS ARE ½ WATT, 5%, UNLESS MARKED OTHERWISE. RESISTOR VALUES ARE IN OHMS (k=1,000 OHMS, M=1,000,000 OHMS).
2. ALL CAPACITOR VALUES ARE IN MICROFARADS (p=PICOFARADS).
3. SCHEMATIC DIAGRAM SHOWN FOR LEFT CHANNEL EXCEPT FOR SOME OF THE COMPONENTS.
4. DC VOLTAGES WERE MEASURED DURING RECORD PAUSE MODE.
5. SIGNAL LEVELS (dB) WERE MEASURED WITH INPUT AND OUTPUT CONTROLS AT SPECIFIED POSITION.
6. READING IN dB REFERENCED TO 0dB=0.775V.

S-185

REVISION	DATE	CHANGE NO.
6	·	
5	·	
4	·	
3	·	
2	07·77	CE-012
1	01·77	

STEREO CASSETTE DECK

MODEL NO. A-480 SHEET NO.

TEAC CORPORATION

A.0101

BLOCK DIAGRAM

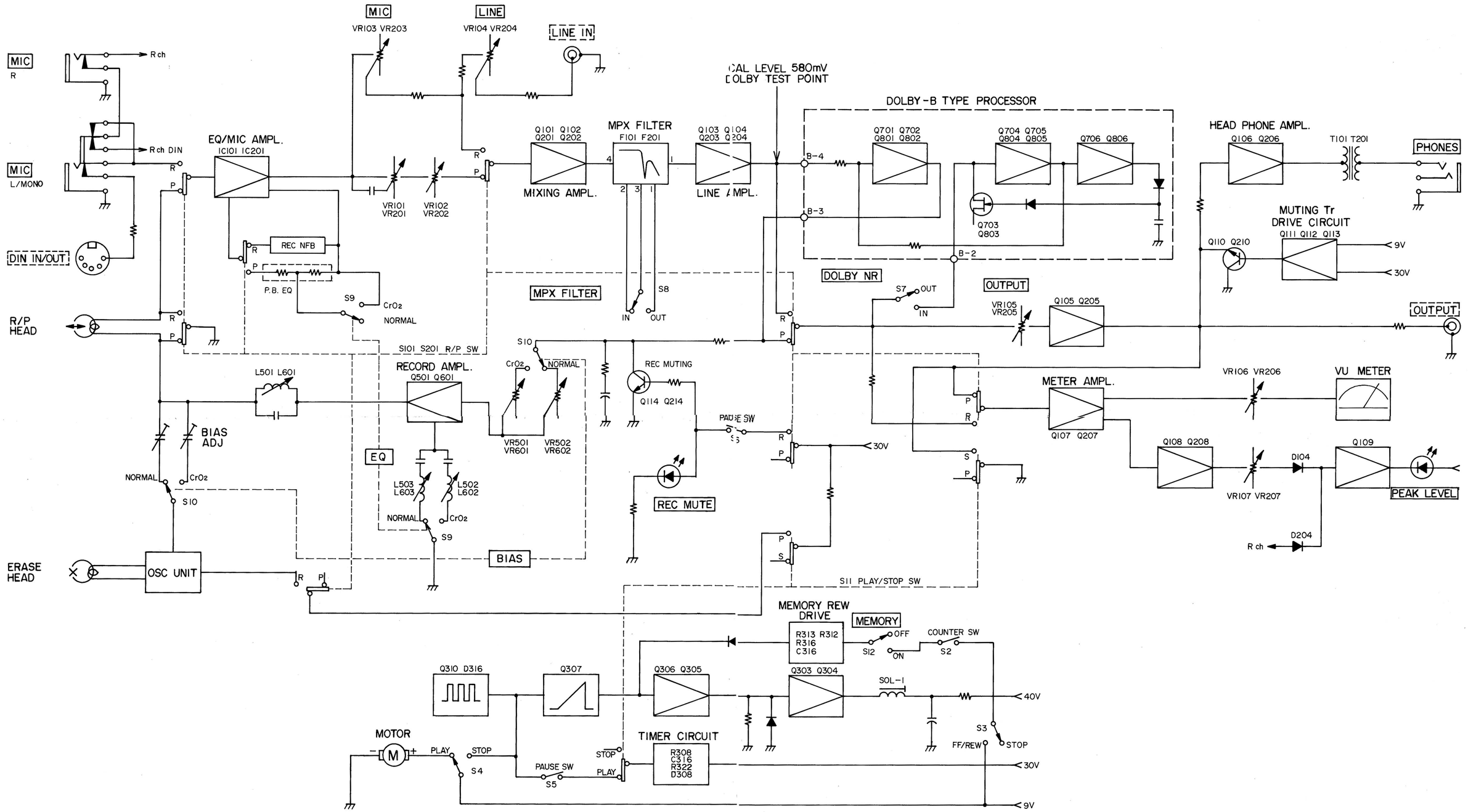

REVISION	DATE	CHANGE NO.
6	·	
5	·	
4	·	
3	·	
2	07·77	CE-012
1	01·77	

STEREO CASSETTE DECK

MODEL NO. **A-480** SHEET NO.

TEAC CORPORATION

A.0101