60 MHz Dual Time Base Oscilloscope

PM3055

Service Manual

4822 872 05327
880411/2

I&E
Industrial & Electro-acoustic Systems Division

PHILIPS
Industrial &
Electro-acoustic Systems

PHILIPS

60 MHz Dual Time Base Oscilloscope

PM3055

Service Manual

4822 872 05327
880411/2

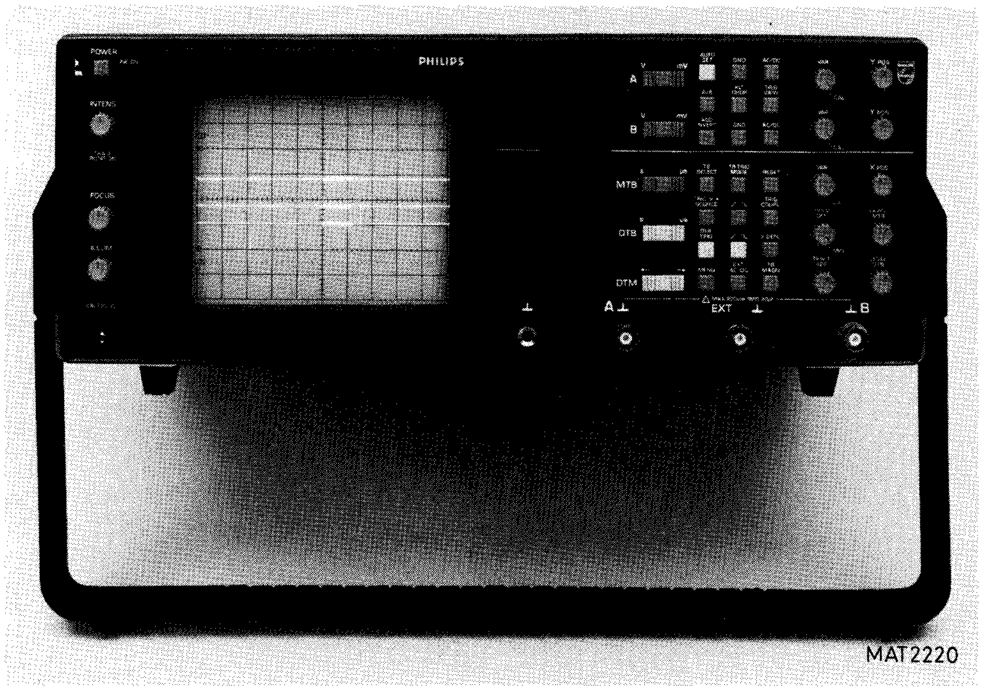
MAT2220

WARNING: These servicing instructions are for use by qualified personnel only. To reduce the risk of electric shock do not perform any servicing other then that specified in the Operating Instructions unless you are fully qualified to do so.

PHILIPS

IMPORTANT: In correspondence concerning this instrument, please quote the type number and serial number as given on the type plate.

NOTE: The design of this instrument is subject to continuous development and improvement. Consequently, this instrument may incorporate minor changes in detail from the information contained in this manual.

© N.V. PHILIPS GLOEILAMPENFABRIEKEN-EINDHOVEN-THE NETHERLANDS-1988

PRINTED IN THE NETHERLANDS

CONTENTS Page

1. SAFETY INSTRUCTIONS 1-1

1.1 Introduction 1-1

1.2 Safety precautions 1-1

1.3 Caution and warning statements 1-1

1.4 Symbols 1-1

1.5 Impaired safety-protection 1-2

1.6 General clauses 1-2

2. CHARACTERISTICS 2-1

2.1 Display 2-3

2.2 Vertical deflections or Y axis 2-3
2.2.1 Channels A and B 2-3
2.2.2 Triggerview 2-5

2.3 Horizontal deflection or X axis 2-6
2.3.1 Main Time Base (MTB) 2-6
2.3.2 Delay Time Base (DTB) 2-6
2.3.3 X-deflection 2-7
2.3.4 EXT input 2-7

2.4 Triggering 2-8
2.4.1 MTB triggering 2-8
2.4.2 DTB triggering 2-9

2.5 Power supply 2-9

2.6 Auxiliary input or outputs 2-10

2.7 Environmental characteristics 2-10

2.8 Safety 2-12

3. INTRODUCTION TO CIRCUIT- AND BLOCK DIAGRAM DESCRIPTION 3-1

3.1 Introduction to circuit description 3-1

3.2 Block diagram description 3-10
3.2.1 Introduction 3-10
3.2.2 Control unit 3-10
3.2.3 Attenuator unit 3-10
3.2.4 Pre-amplifier unit 3-10
3.2.5 Time-base unit 3-12
3.2.6 XYZ unit 3-12
3.2.7 Power supply unit 3-13

4. ATTENUATOR UNIT (A1) 4-1

4.1 Vertical attenuators 4-1

4.2 External input 4-2

5. PRE-AMPLIFIER UNIT (A2) 5-1

5.1 Vertical pre-amplifier 5-1

5.2 MTB trigger pre-amplifier 5-2

5.3 DTB trigger pre-amplifier 5-3

5.4 Pre-amplifier control 5-4

6. XYZ-AMPLIFIER UNIT (A3) 6-1

6.1 Introduction 6-1

6.2 Final vertical (Y) amplifier 6-1

6.3 Final horizontal (X) amplifier 6-1

6.4 Final blanking (Z) amplifier and CRT 6-2

7. TIME-BASE UNIT (A4) 7-1

7.1 Trigger amplifier 7-1

7.2 Timing circuit 7-2

7.3 Sweep generators 7-4

7.4 X DEFL amplifier, and display mode switch 7-6

7.5 Z-amplifier 7-6

7.6 Timing diagrams 7-8

8. CRT CONTROL UNIT (A5) 8-1

9. POWER SUPPLY UNIT (A6) 9-1

9.1 Input circuit 9-1

9.2 Converter circuit 9-1

9.3 Secondary output rectifiers 9-3

9.4 HT supply 9-3

9.5 Calibrator 9-3

10. FRONT UNIT (A7-A8) 10-1

10.1 Microcomputer control circuit 10-1
- 10.1.1 Introduction to MAB8052 microcomputer 10-1
- 10.1.2 Characteristics of the I^2C bus 10-1
- 10.1.3 I^2C structure 10-2
- 10.1.4 Microcomputer MAB8052 10-3
- 10.1.5 I^2C decoding 10-4
- 10.1.6 Status input 10-5
- 10.1.7 Probe indicator 10-5
- 10.1.8 C-Bus decoder 10-5

10.2 LCD display circuit 10-5

10.3 Front-panel controls 10-6

11. PERFORMANCE CHECK 11-1

11.1 General information 11-1

11.2 Preliminary settings 11-2

11.3 Recommended test equipment 11-2

11.4 Checking procedure 11-3
- 11.4.1 Power supply 11-3
- 11.4.2 Display 11-3
- 11.4.3 Vertical deflection or Y-axis 11-4
- 11.4.4 Trigger view 11-10
- 11.4.5 Horizontal deflection or X-axis 11-13
- 11.4.6 MTB triggering 11-18
- 11.4.7 DTB triggering 11-20
- 11.4.8 Auxiliary inputs and outputs 11-22

12. DISMANTLING THE INSTRUMENT 12-1

12.1 General information 12-1

12.2 Removing the top and bottom covers 12-1

12.3 Access to parts for the checking and adjusting procedures 12-1

13. CHECKING AND ADJUSTING 13-1

13.1 General information 13-1

13.2 Recommended test and calibration equipment 13-6

13.3 Survey of adjusting elements 13-7

13.4 Checking and adjusting procedure 13-9
  13.4.1 Preparation 13-9
  13.4.2 Power supply adjustment 13-9
  13.4.3 CRT display adjustment 13-9
  13.4.4 Square-wave response attenuator 13-10
  13.4.5 Adjustment of vertical sensitivities 13-10
  13.4.6 Adjustment of horizontal sensitivity 13-11
  13.4.7 Offset adjustments 13-11
  13.4.8 Adjustment of trigger sensitivity 13-12
  13.4.9 Adjustment of the MTB sweep times 13-12
  13.4.10 Adjustment of the DTB sweep times 13-12
  13.4.11 Adjustment of x10 sweep times 13-13
  13.4.12 Adjustment of delay time multiplier 13-13
  13.4.13 Square-wave response of final Y-amplifier 13-13
  13.4.14 Checking the AUTO SET function 13-14

14. CORRECTIVE MAINTENANCE 14-1

14.1 Replacements 14-1
  14.1.1 Standard parts 14-1
  14.1.2 Special parts 14-1
  14.1.3 Transistors and Integrated Circuits 14-1
  14.1.4 Static-sensitive components 14-2
  14.1.5 Handling MOS devices 14-2

14.2 Removing the units and mechanical parts 14-3
  14.2.1 Attenuator unit (A1) 14-3
  14.2.2 Pre-amplifier unit (A2) 14-4
  14.2.3 XYZ-amplifier unit (A3) 14-4
  14.2.4 Time-base unit (A4) 14-4
  14.2.5 CRT control unit (A5) 14-4
  14.2.6 Power supply unit (A6) 14-5
  14.2.7 Front unit (A7) and LCD unit (A8) 14-6
  14.2.8 Removing the delay line cable 14-7
  14.2.9 Replacement fo CRT 14-7

14.3 Soldering techniques 14-8

14.4 Instrument repacking 14-8

14.5 Trouble shooting 14-9
  14.5.1 Introduction 14-9
  14.5.2 Trouble-shooting techniques 14-9
  14.5.3 Power-up routine 14-10
  14.5.4 Trouble-shooting the power supply 14-11
  14.5.5 P.c.b. interconnections 14-11
  14.5.6 Signal waveforms 14-16
  14.5.7 Semi conductor pinnings 14-16

14.6 Special tools 14-16
  14.6.1 Trimming kit SBC 317 14-16
  14.6.2 P.c.b. snapper 14-17

14.7 Recalibration after repair 14-17

15. SAFETY INSPECTION AND TEST AFTER REPAIR AND MAINTENANCE IN THE PRIMARY CIRCUIT 15-1

15.1 General directives 15-1

15.2 Safety components 15-1

15.3 Checking the protective earth connection 15-1

15.4 Checking the insulation resistance 15-1

15.5 Checking the leakage current 15-1

15.6 Voltage test 15-2

16. PARTS LIST 16-1

16.1 Mechanical parts 16-1

16.2 Units 16-6

16.3 Cables and connectors 16-7
  16.3.1 Flatcables and connectors 16-7
  16.3.2 Pcb-connectors 16-7
  16.3.3 Miscellaneous cables 16-7

16.4 Electrical parts 16-8
  16.4.1 Capacitors 16-8
  16.4.2 Resistors 16-11
  16.4.3 Coils 16-16
  16.4.4 Semi-conductors 16-16
  16.4.5 Integrated circuits 16-18
  16.4.6 Cathode ray tube 16-18
  16.4.7 Miscellaneous 16-18

17. OPTIONS 17-1

17.1 Y-OUT 17-1
  17.1.1 Characteristics 17-1
  17.1.2 Circuit description 17-1
  17.1.3 Adjusting and checking procedure 17-2
  17.1.4 Parts list 17-3

17.2 MTB gate, DTB gate and MTB sweep.................. 17-6
  17.2.1 MTB gate 17-6
  17.2.2 DTB gate 17-6
  17.2.3 MTB sweep 17-6
  17.2.4 Parts list 17-6

LIST OF FIGURES

		Page
Figure 2.1	Dimensions	2-2
Figure 3.1	Block diagram	3-6
Figure 4.1	Table of attenuator settings	4-1
Figure 4.2	Attenuator unit p.c.b.	4-3
Figure 4.3	Circuit diagram of attenuator, ch. A	4-5
Figure 4.4	Circuit diagram of attenuator, ch. B	4-6
Figure 4.5	Attenuator unit p.c.b.	4-8
Figure 4.6	Circuit diagram of attenuator, EXT	4-10
Figure 5.1	The three stages of the vertical pre-amplifier	5-1
Figure 5.2	Pre-amplifier unit p.c.b.	5-5
Figure 5.3	Circuit diagram of pre-amplifier, channel switch + delay line driver	5-7
Figure 5.4	Circuit diagram of pre-amplifier, MTB trigger switch	5-8
Figure 5.5	Pre-amplifier unit p.c.b.	5-10
Figure 5.6	Circuit diagram of pre-amplifier, DTB trigger switch	5-12
Figure 5.7	Circuit diagram of pre-amplifier, logic control	5-14
Figure 6.1	XYZ amplifier unit p.c.b.	6-3
Figure 6.2	Circuit diagram of XYZ amplifier, final X and Y amplifiers	6-5
Figure 6.3	XYZ amplifier unit p.c.b.	6-6
Figure 6.4	Circuit diagram of XYZ amplifier, Z amplifier and CRT circuit	6-8
Figure 7.1	D4103 configuration	7-2
Figure 7.2	Simplified diagram of the MTB	7-4
Figure 7.3	Z-logic for the different TB modes	7-7
Figure 7.4	Free-running MTB sweep-timing diagram	7-8
Figure 7.5	Triggered MTB-sweep with a delay sweep-timing diagram	7-8
Figure 7.6	Triggered MTB- and DTB-sweep-timing diagram	7-9
Figure 7.7	Time base unit p.c.b.	7-11
Figure 7.8	Circuit diagram of time-base, trigger amplifier MTB and DTB	7-13
Figure 7.9	Circuit diagram of time base, MTB and DTB sweep circuits and final X DEFL amplifier	7-
Figure 7.10	Time base unit p.c.b.	7-
Figure 7.11	Circuit diagram of time-base, X pre-amplifier and Z switch	7-
Figure 8.1	Circuit diagram of CRT control	8-1
Figure 8.2	CRT control unit p.c.b.	8-1
Figure 9.1	Converter circuit	9-2
Figure 9.2	Timing diagram converter circuit	9-2
Figure 9.3	HT oscillator	9-3
Figure 9.4	Power supply unit p.c.b.	9-5
Figure 9.5	Circuit diagram of power supply	9-8

Figure 10.1 Bit transfer 10-1
Figure 10.2 Definition of start and stop conditions 10-2
Figure 10.3 I^2C structure 10-2
Figure 10.4 Pinning of microcomputer MAB 8052 10-3
Figure 10.5 Front unit p.c.b. 10-6
Figure 10.6 Circuit diagram of front unit 10-8
Figure 10.7 LCD unit p.c.b. 10-9
Figure 10.8 Circuit diagram of LCD unit 10-10

Figure 12.1 Access to all parts for checking and adjusting 12-2

Figure 13.1 Adjusting elements 13-4
Figure 13.2 Square-wave response 13-14

Figure 14.1 Six clamping lips for XYZ-amplifier unit 14-4
Figure 14.2 Power supply unit outside the instrument 14-5
Figure 14.3 Measuring the front unit working condition 14-6
Figure 14.4 Removng the CRT 14-7
Figure 14.5 P.c.b. interconnections 14-13
Figure 14.6 14-16
Figure 14.7 Trimming tool kit 14-17
Figure 14.8 P.c.b. snapper 14-17

Figure 16.1 Exploded view 16-3
Figure 16.2 Rear view 16-5
Figure 16.3 Inside view showing the parts in the CRT compartiment 16-5
Figure 16.4 View of the units 16-5

Figure 17.1 Y-OUT p.c.b. 17-4
Figure 17.2 Circuit diagram of Y-OUT option 17-5
Figure 17.3 Circuit diagram of MTB gate, DTB gate and MTB sweep options 17-7
Figure 17.4 P.c.b. for MTB gate, DTB gate and MTB sweep 17-7

1. SAFETY INSTRUCTIONS

Read these pages carefully before installation and use of the instrument.

1.1 INTRODUCTION

The following clauses contain information, cautions and warnings which must be followed to ensure safe operation and to retain the instrument in a safe condition.
Adjustment, maintenance and repair of the instrument shall be carried out only by qualified personnel.

1.2 SAFETY PRECAUTIONS

For the correct and safe use of this instrument it is essential that both operating and servicing personnel follow generally-accepted safety procedures in addition to the safety precautions specified in this manual.
Specific warning and caution statements, where they apply, will be found throughout the manual.
Where necessary, the warning and caution statements and/or symbols are marked on the apparatus.

1.3 CAUTION AND WARNING STATEMENTS

CAUTION: is used to indicate correct operating or maintentance procedures in order to prevent damage to or destruction of the equipment or other property.

WARNING: calls attention to a potential danger that requires correct procedures or pracites in order to prevent personal injury.

1.4 SYMBOLS

⚡	High voltage ≥ 1000 V	(red)
⚠	Live part	(black/yellow)
⚠	Read the operating instructions	
⏚	Protective earth (grounding) terminal	(black)

1.5 IMPAIRED SAFETY-PROTECTION

Whenever it is likely that safety-protection has been impaired, the instrument must be made inoperative and be secured against any unintended operation. The matter should then be referred to qualified technicians.
Safety protection is likely to be impaired if, for example, the instrument fails to perform the intended measurements or shows visible damage.

1.6 GENERAL CLAUSES

1.6.1 WARNING: The opening of covers or removal of parts, except those to which access can be gained by hand, is likely to expose live parts and accessible terminals which can be dangerous to live.

1.6.2 The instrument shall be disconnected from all voltage sources before it is opened.

1.6.3 Bear in mind that capacitors inside the instrument can hold their charge even if the instrument has been separated from all voltage sources.

1.6.4 WARNING: Any interruption of the protective earth conductor inside or outside the instrument, or disconnection of the protective earth terminal, is likely to make the instrument dangerous. Intentional interruption is prohibited.

1.6.5 Components which are important for the safety of the instrument may only be renewed by components obtained through your local Philips organisation. (See also section 15).

1.6.6 After repair and maintenance in the primary circuit, safety inspection and tests, as mentioned in section 15 have to be performed.

2. CHARACTERISTICS

A. Performance Characteristics

- Properties expressed in numerical values with stated tolerance are guaranteed by PHILIPS Specified non-tolerance numerical values indicate those that could be nominally expected from the mean of a range of identical instruments.
- This specification is valid after the instrument has warmed up for 30 minutes (reference temperature 23°C).
- For definitions of terms, reference is made to IEC Publication 351-1.

B. Safety Characteristics

- This apparatus has been designed and tested in accordance with Safety Class I requirements of IEC Publication 348, Safety requirements for Electronic Measuring Apparatus, UL 1244 and CSA 556B and has been supplied in a safe condition.

C. Initial Characteristics

. Overall dimensions:

- Width

  Including handle : 387 mm
  Excluding handle : 350 mm

- Length

  Including handle, excl. knobs : 518,5 mm
  Excluding handle, excl. knobs : 443,5 mm

  Including handle, incl. knobs : 530,5 mm
  Excluding handle, incl. knobs : 455,5 mm

- Height

  Including feet : 146,5 mm
  Excluding feet : 134,5 mm
  Excl. under cabinet : 132,5 mm

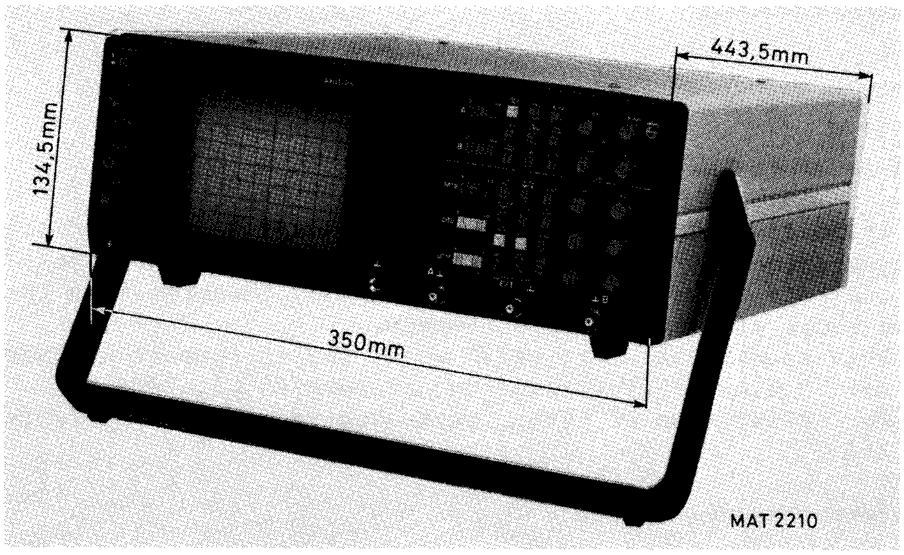

Figure 2.1 Dimensions

* Mass : 7,5 kg

* Operating positions:

  a. Horizontally on bottom feet
  b. Vertically on rear feet
  c. On the carrying handle in two sloping positions.

D. CONTENTS

2.1. Display
2.2. Vertical deflection or Y axis
2.3. Horizontal deflection or X axis
2.4. Triggering
2.5. Power Supply
2.6. Auxiliary inputs or outputs
2.7. Environmental characteristics
2.8. Safety

	CHARACTERISTICS	SPECIFICATION	ADDITIONAL INFORMATION
2.1	DISPLAY		
	* CRT		
	Type No	PHILIPS D 14-372	
	Measuring area (h x w)	80 x 100 mm	8 x 10 div. 1 div. = 10 mm 1 subdiv. (sd) = 2 mm
	* Screen type		
	Standard	GH (P 31)	
	Option	GM (P 7)	Long persistence
	* Total acceleration voltage	16 kV	
	* Graticule		
	Engravings	Internal fixed	
	Division lines	1 cm	Horizontal as well as vertical
	Subdivisions	2 mm	Idem.
	Dotted lines	1,5 and 6,5 cm from top	Only horizontal.
	Percentages	0%, 10%, 90%, 100%	
	* Orthogonality	90° +/- 1°	Measured in zero point.
	* Illumination	Continuously variable	
	* Display time per channel in chopped mode	< 2 us	
	* LCD liquid crystal display		All relevant settings are visible in display.
	Type No	LC 9438130	
	Visible area	25,4 x 88,8 mm	
	Back lighting	Permanently on	
2.2	VERTICAL DEFLECTION OR Y AXIS		
2.2.1	Channels A and B		
	* Deflection coeff.	2 mV/div...10 V/div	In 1, 2, 5 sequence. If PM 8936/09 is used, deflection coeff. is automatically calculated in display.
	* Variable gain control range	1 : >2,5	
	* Error limit	< +/- 3%	Only in calibrated position.
	* Input impedance	1 M ohm +/-2%	Measured at f_o < 1 MHz
	Paralleled by	20 pF +/-2pF	Measured at f_o < 1 MHz

CHARACTERISTICS	SPECIFICATION	ADDITIONAL INFORMATION
* Max. input voltage	400 V (d.c. + a.c. peak)	
Max. test voltages (rms)	500 V	Max. duration 60 sec.
* Bandwidth for 20 mV...10 V	> 60 MHz (amb.: 0...35°C)	Input 6 div. sine-wave.
Bandwidth for 2 mV, 5 mV and 10 mV	> 35 MHz	Input 6 div. sine-wave.
* Rise-time	5,8 ns or less	Calculated from 0,35/f-3 dB
* Noise		
20 mV...10 V	< 0,5 sd	Measured visually. Pick up on open BNC excluded.
* Lower - 3 dB point	< 10 Hz	In AC position, 6 div. sine-wave
* Dynamic range		
@ 1 MHz	> +/- 12 div.	Vernier in cal. position.
@ 50 MHz	> 8 div.	Vernier in cal. position.
* Position range	> +/- 8 div.	Vernier in cal. position.
* Decoupling factor between channels		Both channels same attenuator setting. Input max. 8 div. sine-wave.
@ 10 MHz	1 : > 100	2,5 and 10 V are excluded.
@ 50 MHz	1 : > 50	2,5 and 10 V are excluded.
* Common Mode Rejection Ratio @ 1 MHz	1 : > 100	Both channels same attenuator setting, vernier adjusted for best CMRR; measured with max. 8 div. (+/- 4 div.) each channel.
* L.F.Non Linearity	< 3%	
* Visible signal delay	> 15 ns	Max. intensity, measured from line start to trigger point

CHARACTERISTICS	SPECIFICATION	ADDITIONAL INFORMATION
* Base-line jump between attenuator steps 20 mV...10 V	< 1 sd	
Additional jump between 10 mV <---> 20 mV	< 1,5 sd	
Normal Invert jump	< 1 sd	Only channel B.
ADD jump	< 0,6 div.	When A and B are positioned in screen centre (20 mV...10 V).
Variable jump	< 1 sd	Max.jump in any position of the vernier.

2.2.2 Triggerview

* Bandwidth via A or B channel 2 mV, 5 mV, 10 mV	> 35 MHz	6 div. sine-wave
20 mV...10 V	> 50 MHz (Amb.: 0...35°C)	
Via EXT. input	> 50 MHz	6 div. sine-wave (+/- 3 div. from screen centre).
* Deflection coeff.		
Via channel A or B	2 mV/div...10 V/div	1, 2, 5 sequence (see Channel A, B).
Via EXT. input	100 mV/div.	
Error limit	< 5%	INTERNAL, EXTERNAL.
* Lower - 3 dB point		
AC coupling EXT. input	< 10 Hz	Only when trigger coupling is DC.
* Line jump trigger source	< 2 sd	Jump between trigger source A, B composite and EXT.
* OFFSET trig.point from screen centre	< 1,5 sd	
* Delay EXT. trigger view and channel A or B	< 10 ns	
* Dynamic range EXT. input		
@ 1 MHz	> +/- 12 div.	
@ 50 MHz	> 6 div.	

	CHARACTERISTICS	SPECIFICATION	ADDITIONAL INFORMATION
2.3	HORIZONTAL DEFLECTION OR X AXIS		
	* Horizontal display modes	MTB, MTBI, ALT.TB, DTB X-DEFL	
2.3.1	Main Time Base (MTB)		
	* Time coeff.	0,5 sec...50 ns	1, 2, 5 sequence (magn.off)
	Error limit	< 3%	Measured at -4...+4 div. from screen centre.
	* Horizontal position range	Start of sweep and 10th div. must be shifted over screen centre	
	* Variable control ratio	1 : > 2,5	
	* Time Base magnifier	Expansion *10	Not valid in X-deflection.
	Error limit	< 4%	Measured at +4...-4 div. from screen centre. Excluding first 50 ns and last 50 ns.
	* Horizontal magnifier balance * 10 ---> * 1	< 2,5 sd	Shift start of sweep in * 10 in mid-screen position, then switch to * 1.
	* Hold-Off Minimum to maximum hold-off time ratio	1 : > 10	Minimum hold off time is related to time base setting.
2.3.2	Delay Time Base (DTB)		
	* Time coeff.	1 ms...50 ns	Sequence 1, 2, 5.
	Error limit		See MTB
	* Horizontal position range		See MTB
	* Time Base Magnifier		See MTB

CHARACTERISTICS	SPECIFICATION	ADDITIONAL INFORMATION
* Delay time Multiplier		
Error limit	3% + 1% incremental delay error + 25 ns +/- 5 ns	* 1 only
Incremental delay time error	< 1%	* 1 only
* Resolution	1 : 10 000	
* Delay Time Jitter	1 : > 20 000	
* Trace separation		Only valid in alternate time base.
Shift range	> +/- 4 div.	DTB shifts only.

2.3.3 X-deflection

CHARACTERISTICS	SPECIFICATION	ADDITIONAL INFORMATION
* Deflection coeff.		
Via channel A or B	2 mV/div...10 V/div	1, 2, 5 sequence.
Via EXT. input	100 mV/div.	
* Error limit		
Via channel A or B	< +/- 5%	
Via EXT. input	< +/- 5%	
* Bandwidth	DC .... > 2 MHz	DC coupled
* Phase shift between X and Y-deflection	< 3° @ 100 kHz	
* Dynamic range	> +/- 12 div. @ 100 kHz	

2.3.4 EXT input

CHARACTERISTICS	SPECIFICATION	ADDITIONAL INFORMATION
* Input impedance	1 M ohm +/- 2%	f_o < 1 MHz
Paralleled by	20 pF +/- 2 pF	f_o < 1 MHz
* Max. input voltage	400 V (d.c. + a.c. peak)	
Max. test voltage (rms)	500 V	Max. duration 60 sec.
* Lower - 3 dB point	< 10 Hz	AC coupled

2.4 TRIGGERING

2.4.1 MTB triggering

CHARACTERISTICS	SPECIFICATION	ADDITIONAL INFORMATION
* Trig.mode		
AUTO (auto free run)	Bright line in absence of trigger signal	Auto free run starts 100 ms (typ.) after no trig.pulse.
Triggered		Switches automatically to auto free run if one of the display channels is grounded.
Single		In multi-channel mode (alternated) each channel is armed after reset; if sweep has already started, sweep is not finished. Not applicable in peak to peak coupling.
* Trigger source A, B, Composite (AB), EXT, Line		Line trigger source always triggers on main frequency. Line trigger amplitude depends on line input voltage. Approx. 6 div. @ 220 VAC input voltage.
* Trigger coupling Peak-to-peak (p-p), DC, TVL, TVF		
* Level range		
Peak-to-peak	Related to peak-to-peak	p-p coupling is DC rejected.
DC INTERNAL	> (+ or - 8 div.)	
DC EXTERNAL	> (+ or - 800 mV)	
TVL/TVF	Fixed level	
* Trigger slope	+/-	Slope sign in LCD and + or - if TVL/F in chosen for positive or negative video.
* Trigger sensitivity		
INTERNAL		
0 - 10 MHz	< 0,5 div.	Trig. coupling DC.
@ 50 MHz	< 1,0 div.	Trig. coupling DC.
@ 100 MHz	3,0 div.	Trig. coupling DC.
EXTERNAL		
0 - 10 MHz	< 50 mV	Trig. coupling DC.
@ 50 MHz	< 150 mV	Trig. coupling DC.
@ 100 MHz	500 mV	Trig. coupling DC.
TVL/F INTERNAL	< 0,7 div.	Sync. pulse.
EXTERNAL	< 70 mV	Sync. pulse.

	CHARACTERISTICS	SPECIFICATION	ADDITIONAL INFORMATION
2.4.2	DTB Triggering		
	* DTB trigger source Starts, A, B, Composite (AB), EXT and TVL		TVL has same trig.source as MTB trig. source TVL only valid if MTB trig. coupling TVL or TVF is chosen.
	* Coupling	DC	
	* Trigger sensitivity	See MTB	
	* Trigger Level range	> (+ or - 8 div.)	
	* Trigger slope	+/-	Slope sign in LCD, if TVL is chosen. Slope sign is not valid
2.5	POWER SUPPLY		
	* Line input voltage AC		One range.
	Nominal	100 - 240 V	
	Limits of operation	90 - 264 V	
	* Line frequency		
	Nominal	50 - 400 Hz	
	Limits of operation	45 - 440 Hz	
	* Safety requirements within specification of: IEC 348 CLASS I UL 1244 VDE 0411 CSA 556 B		
	* Power consumption	45 W	

2.6 AUXILIARY INPUTS OR OUTPUTS

CHARACTERISTICS	SPECIFICATION	ADDITIONAL INFORMATION
* Z-MOD		TTL-compatible.
ViH	> 2,0 V	Blanks display.
ViL	< 0,8 V	Max. intensity Analogue control between ViH and ViL is possible.
* DIN plug 9-pin (female)		For IEEE control, front-panel memory back-up.
* CAL		To calibrate drop or tilt probes.
Output voltage	1,2 V +/- 1%	Rectangular output pulse.
Frequency	2 kHz	
The output may be short-circuit to ground.		

2.7 ENVIRONMENTAL CHARACTERISTICS

The environmental data mentioned in this manual are based on the results of the manufacturer's checking procedures.
Details on these procedures and failure criteria are supplied on request by the PHILIPS organisation in your country, or by PHILIPS, INDUSTRIAL AND ELECTRO-ACOUSTIC SYSTEMS DIVISION, EINDHOVEN, THE NETHERLANDS.

* Meets environmental requirements of:	MIL-T-28800 C, type III, CLASS 5 Style D	
* Temperature		
Operation temp. range within specification	10...40°C	MIL-T-28800 C par. 3.9.2.3. tested, par. 4.5.5.1.1.
Limits of operation temperature range	0 ...50°C	Idem.
Non-operating (Storage)	- 40°C/+ 75°C	MIL-T-28800 C par. 3.9.2.3. tested, par. 4.5.5.1.1.
* Max. humidity operating non-operating	95% RH	10...30°C
* Max. altitude		MIL-T-28800 C par. 3.9.3. tested, par. 4.5.5.2.
Operating	4,5 km (15000 feet)	Maximum (Operating Temperature derated 3°C for each km, for each 3000 feet, above sea level).
Non-operating (storage)	12 km (40 000 feet)	

CHARACTERISTICS	SPECIFICATION	ADDITIONAL INFORMATION
* Vibration (operating)		MIL-T-28800 C par. 3.9.4.1. tested, par. 4.5.5.3.1.
Freq. 5...15 Hz Sweep Time	7 min.	
Excursion (p-p)	1,5 mm	
Max Acceleration	$7\ m/s^2$ (0,7 x g)	@ 15 Hz
Freq. 15...25 Hz Sweep Time	3 min.	
Excursion (p-p)	1 mm	
Max Acceleration	$13\ m/s^2$ (1,3 x g)	@ 25 Hz
Freq. 25...55 Hz Sweep Time	5 min.	
Excursion (p-p)	0,5 mm	
Max Acceleration	$30\ m/s^2$ (3 x g)	@ 55 Hz
Resonance Dwell	10 min.	@ each resonance freq. (or @ 33 Hz if no resonance was found). Excursion, 9.7.1. to 9.7.2.
* Shock (operating)		MIL-T-28800 C par. 3.9.5.1. tested, par. 4.5.5.4.1.
Amount of shocks		
total	18	
each axis	6	(3 in each direction).
Shock Wave-form	Half sine-wave	
Duration	11 ms	11 ms
Peak Acceleration	$300\ m/s^2$ (30 x g)	
* Bench handling		Mil-T-28800 C par. 3.9.5.3. tested, par. 4.5.5.4.3.
Meets requirements of	MIL-STD-810 method 516, proced. V	
* Salt Atmosphere		MIL-T-28800C par. 3.9.8.1 tested, par. 4.5.6.2.1.
Structural parts meet requirements of	MILT-STD-810 methode 509, proced. I salt solution 20%	
* EMI (Electronic Magnetic Interference)		
meets requirements of	MIL-STD-461 CLASS B	Applicable requirements of part 7 : CE03, CS01, CS02, CS06, RE02, RS03
	VDE 0871 and VDE 0875 Grenzwertklasse B	

CHARACTERISTICS	SPECIFICATION	ADDITIONAL INFORMATION
* Magnetic Radiated Susceptibility Maximum Deflection Factor		Tested in conformity with IEC 351-1 par. 5.1.3.1. Measured with instrument in a homogeneous magnetic field (in any direction with respect to instrument) with a flux intensity (p-p value) of 1,42 mT (14,2 gauss) and of symmetrical sine-wave form with a frequency of 45...66Hz.

2.8 SAFETY

* Meets requirements of	IEC 348 CLASS I VDE 0411	Except for power cord, unless shipped with Universal European power plug.
	UL 1244 CSA 556 B	Except for power cord, unless shipped with North American power plug.
* Max. X-Radiation		Measured @ 5 cm from surface of instrument for a target area of 10 cm^2
* Recovery time	15 min.	-10°C ----> + 25°C ambient temp.
	30 min.	-20°C ----> + 25°C ambient temp.
	45 min.	-30°C ----> + 25°C ambient temp.
	60 min.	-40°C ----> + 40°C ambient temp.

2. CHARACTERISTICS

A. Performance Characteristics

- Properties expressed in numerical values with stated tolerance are guaranteed by PHILIPS Specified non-tolerance numerical values indicate those that could be nominally expected from the mean of a range of identical instruments.
- This specification is valid after the instrument has warmed up for 30 minutes (reference temperature 23°C).
- For definitions of terms, reference is made to IEC Publication 351-1.

B. Safety Characteristics

- This apparatus has been designed and tested in accordance with Safety Class I requirements of IEC Publication 348, Safety requirements for Electronic Measuring Apparatus, UL 1244 and CSA 556B and has been supplied in a safe condition.

C. Initial Characteristics

. Overall dimensions:

- Width

Including handle : 387 mm
Excluding handle : 350 mm

- Length

Including handle, excl. knobs : 518,5 mm
Excluding handle, excl. knobs : 443,5 mm

Including handle, incl. knobs : 530,5 mm
Excluding handle, incl. knobs : 455,5 mm

- Height

Including feet : 146,5 mm
Excluding feet : 134,5 mm
Excl. under cabinet : 132,5 mm

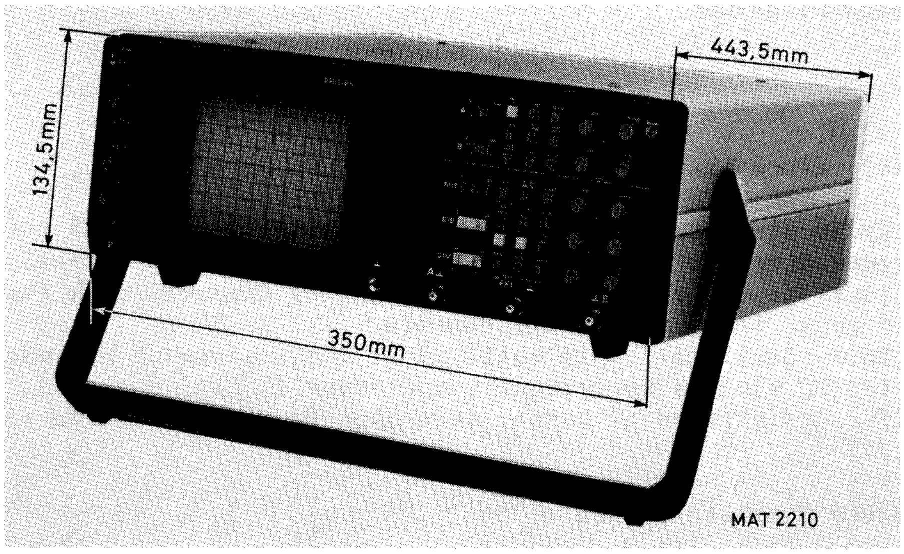

Figure 2.1 Dimensions

- Mass : 7,5 kg

- Operating positions:
  - a. Horizontally on bottom feet
  - b. Vertically on rear feet
  - c. On the carrying handle in two sloping positions.

D. CONTENTS

2.1. Display
2.2. Vertical deflection or Y axis
2.3. Horizontal deflection or X axis
2.4. Triggering
2.5. Power Supply
2.6. Auxiliary inputs or outputs
2.7. Environmental characteristics
2.8. Safety

	CHARACTERISTICS	SPECIFICATION	ADDITIONAL INFORMATION
2.1	DISPLAY		
	* CRT		
	Type No	PHILIPS D 14-372	
	Measuring area (h x w)	80 x 100 mm	8 x 10 div. 1 div. = 10 mm 1 subdiv. (sd) = 2 mm
	* Screen type		
	Standard	GH (P 31)	
	Option	GM (P 7)	Long persistence
	* Total acceleration voltage	16 kV	
	* Graticule		
	Engravings	Internal fixed	
	Division lines	1 cm	Horizontal as well as vertical
	Subdivisions	2 mm	Idem.
	Dotted lines	1,5 and 6,5 cm from top	Only horizontal.
	Percentages	0%, 10%, 90%, 100%	
	* Orthogonality	90° +/- 1°	Measured in zero point.
	* Illumination	Continuously variable	
	* Display time per channel in chopped mode	< 2 us	
	* LCD liquid crystal display		All relevant settings are visible in display.
	Type No	LC 9438130	
	Visible area	25,4 x 88,8 mm	
	Back lighting	Permanently on	
2.2	VERTICAL DEFLECTION OR Y AXIS		
2.2.1	Channels A and B		
	* Deflection coeff.	2 mV/div...10 V/div	In 1, 2, 5 sequence. If PM 8936/09 is used, deflection coeff. is automatically calculated in display.
	* Variable gain control range	1 : >2,5	
	* Error limit	< +/- 3%	Only in calibrated position.
	* Input impedance	1 M ohm +/-2%	Measured at f_o < 1 MHz
	Paralleled by	20 pF +/-2pF	Measured at f_o < 1 MHz

CHARACTERISTICS	SPECIFICATION	ADDITIONAL INFORMATION
* Max. input voltage	400 V (d.c. + a.c. peak)	
Max. test voltages (rms)	500 V	Max. duration 60 sec.
* Bandwidth for 20 mV...10 V	> 60 MHz (amb.: 0...35°C)	Input 6 div. sine-wave.
Bandwidth for 2 mV, 5 mV and 10 mV	> 35 MHz	Input 6 div. sine-wave.
* Rise-time	5,8 ns or less	Calculated from 0,35/f-3 dB
* Noise		
20 mV...10 V	< 0,5 sd	Measured visually. Pick up on open BNC excluded.
* Lower - 3 dB point	< 10 Hz	In AC position, 6 div. sine-wave
* Dynamic range		
@ 1 MHz	> +/- 12 div.	Vernier in cal. position.
@ 50 MHz	> 8 div.	Vernier in cal. position.
* Position range	> +/- 8 div.	Vernier in cal. position.
* Decoupling factor between channels		Both channels same attenuator setting. Input max. 8 div. sine-wave.
@ 10 MHz	1 : > 100	2,5 and 10 V are excluded.
@ 50 MHz	1 : > 50	2,5 and 10 V are excluded.
* Common Mode Rejection Ratio @ 1 MHz	1 : > 100	Both channels same attenuator setting, vernier adjusted for best CMRR; measured with max. 8 div. (+/- 4 div.) each channel.
* L.F.Non Linearity	< 3%	
* Visible signal delay	> 15 ns	Max. intensity, measured from line start to trigger point

CHARACTERISTICS	SPECIFICATION	ADDITIONAL INFORMATION
* Base-line jump between attenuator steps 20 mV...10 V	< 1 sd	
Additional jump between 10 mV <---> 20 mV	< 1,5 sd	
Normal Invert jump	< 1 sd	Only channel B.
ADD jump	< 0,6 div.	When A and B are positioned in screen centre (20 mV...10 V).
Variable jump	< 1 sd	Max.jump in any position of the vernier.

2.2.2 Triggerview

* Bandwidth via A or B channel 2 mV, 5 mV, 10 mV	> 35 MHz	6 div. sine-wave
20 mV...10 V	> 50 MHz (Amb.: 0...35°C)	
Via EXT. input	> 50 MHz	6 div. sine-wave (+/- 3 div. from screen centre).
* Deflection coeff.		
Via channel A or B	2 mV/div...10 V/div	1, 2, 5 sequence (see Channel A, B).
Via EXT. input	100 mV/div.	
Error limit	< 5%	INTERNAL, EXTERNAL.
* Lower - 3 dB point		
AC coupling EXT. input	< 10 Hz	Only when trigger coupling is DC.
* Line jump trigger source	< 2 sd	Jump between trigger source A, B composite and EXT.
* OFFSET trig.point from screen centre	< 1,5 sd	
* Delay EXT. trigger view and channel A or B	< 10 ns	
* Dynamic range EXT. input		
@ 1 MHz	> +/- 12 div.	
@ 50 MHz	> 6 div.	

	CHARACTERISTICS	SPECIFICATION	ADDITIONAL INFORMATION
2.3	HORIZONTAL DEFLECTION OR X AXIS		
	* Horizontal display modes	MTB, MTBI, ALT.TB, DTB X-DEFL	
2.3.1	Main Time Base (MTB)		
	* Time coeff.	0,5 sec...50 ns	1, 2, 5 sequence (magn.off)
	Error limit	< 3%	Measured at -4...+4 div. from screen centre.
	* Horizontal position range	Start of sweep and 10th div. must be shifted over screen centre	
	* Variable control ratio	1 : > 2,5	
	* Time Base magnifier	Expansion *10	Not valid in X-deflection.
	Error limit	< 4%	Measured at +4...-4 div. from screen centre. Excluding first 50 ns and last 50 ns.
	* Horizontal magnifier balance * 10 ---> * 1	< 2,5 sd	Shift start of sweep in * 10 in mid-screen position, then switch to * 1.
	* Hold-Off Minimum to maximum hold-off time ratio	1 : > 10	Minimum hold off time is related to time base setting.
2.3.2	Delay Time Base (DTB)		
	* Time coeff.	1 ms...50 ns	Sequence 1, 2, 5.
	Error limit		See MTB
	* Horizontal position range		See MTB
	* Time Base Magnifier		See MTB

CHARACTERISTICS	SPECIFICATION	ADDITIONAL INFORMATION
* Delay time Multiplier		
Error limit	3% + 1% incremental delay error + 25 ns +/- 5 ns	* 1 only
Incremental delay time error	< 1%	* 1 only
* Resolution	1 : 10 000	
* Delay Time Jitter	1 : > 20 000	
* Trace separation		Only valid in alternate time base.
Shift range	> +/- 4 div.	DTB shifts only.

2.3.3 X-deflection

* Deflection coeff.		
Via channel A or B	2 mV/div...10 V/div	1, 2, 5 sequence.
Via EXT. input	100 mV/div.	
* Error limit		
Via channel A or B	< +/- 5%	
Via EXT. input	< +/- 5%	
* Bandwidth	DC .... > 2 MHz	DC coupled
* Phase shift between X and Y-deflection	< 3° @ 100 kHz	
* Dynamic range	> +/- 12 div. @ 100 kHz	

2.3.4 EXT input

* Input impedance	1 M ohm +/- 2%	f_o < 1 MHz
Paralleled by	20 pF +/- 2 pF	f_o < 1 MHz
* Max. input voltage	400 V (d.c. + a.c. peak)	
Max. test voltage (rms)	500 V	Max. duration 60 sec.
* Lower - 3 dB point	< 10 Hz	AC coupled

2.4 TRIGGERING

2.4.1 MTB triggering

CHARACTERISTICS	SPECIFICATION	ADDITIONAL INFORMATION
* Trig.mode		
AUTO (auto free run)	Bright line in absence of trigger signal	Auto free run starts 100 ms (typ.) after no trig.pulse.
Triggered		Switches automatically to auto free run if one of the display channels is grounded.
Single		In multi-channel mode (alternated) each channel is armed after reset; if sweep has already started, sweep is not finished. Not applicable in peak to peak coupling.
* Trigger source A, B, Composite (AB), EXT, Line		Line trigger source always triggers on main frequency. Line trigger amplitude depends on line input voltage. Approx. 6 div. @ 220 VAC input voltage.
* Trigger coupling Peak-to-peak (p-p), DC, TVL, TVF		
* Level range		
Peak-to-peak	Related to peak-to-peak	p-p coupling is DC rejected.
DC INTERNAL	> (+ or - 8 div.)	
DC EXTERNAL	> (+ or - 800 mV)	
TVL/TVF	Fixed level	
* Trigger slope	+/-	Slope sign in LCD and + or - if TVL/F in chosen for positive or negative video.
* Trigger sensitivity		
INTERNAL		
0 - 10 MHz	< 0,5 div.	Trig. coupling DC.
@ 50 MHz	< 1,0 div.	Trig. coupling DC.
@ 100 MHz	3,0 div.	Trig. coupling DC.
EXTERNAL		
0 - 10 MHz	< 50 mV	Trig. coupling DC.
@ 50 MHz	< 150 mV	Trig. coupling DC.
@ 100 MHz	500 mV	Trig. coupling DC.
TVL/F INTERNAL	< 0,7 div.	Sync. pulse.
EXTERNAL	< 70 mV	Sync. pulse.

	CHARACTERISTICS	SPECIFICATION	ADDITIONAL INFORMATION
2.4.2	DTB Triggering		
	* DTB trigger source Starts, A, B, Composite (AB), EXT and TVL		TVL has same trig.source as MTB trig. source TVL only valid if MTB trig. coupling TVL or TVF is chosen.
	* Coupling	DC	
	* Trigger sensitivity	See MTB	
	* Trigger Level range	> (+ or - 8 div.)	
	* Trigger slope	+/-	Slope sign in LCD, if TVL is chosen. Slope sign is not valid
2.5	POWER SUPPLY		
	* Line input voltage AC		One range.
	Nominal	100 - 240 V	
	Limits of operation	90 - 264 V	
	* Line frequency		
	Nominal	50 - 400 Hz	
	Limits of operation	45 - 440 Hz	
	* Safety requirements within specification of: IEC 348 CLASS I UL 1244 VDE 0411 CSA 556 B		
	* Power consumption	45 W	

CHARACTERISTICS	SPECIFICATION	ADDITIONAL INFORMATION

2.6 AUXILIARY INPUTS OR OUTPUTS

CHARACTERISTICS	SPECIFICATION	ADDITIONAL INFORMATION
* Z-MOD		TTL-compatible.
ViH	> 2,0 V	Blanks display.
ViL	< 0,8 V	Max. intensity Analogue control between ViH and ViL is possible.
* DIN plug 9-pin (female)		For IEEE control, front-panel memory back-up.
* CAL		To calibrate drop or tilt probes.
Output voltage	1,2 V +/- 1%	Rectangular output pulse.
Frequency	2 kHz	
The output may be short-circuit to ground.		

2.7 ENVIRONMENTAL CHARACTERISTICS

The environmental data mentioned in this manual are based on the results of the manufacturer's checking procedures.
Details on these procedures and failure criteria are supplied on request by the PHILIPS organisation in your country, or by PHILIPS, INDUSTRIAL AND ELECTRO-ACOUSTIC SYSTEMS DIVISION, EINDHOVEN, THE NETHERLANDS.

CHARACTERISTICS	SPECIFICATION	ADDITIONAL INFORMATION
* Meets environmental requirements of:	MIL-T-28800 C, type III, CLASS 5 Style D	
* Temperature		
Operation temp. range within specification	10...40°C	MIL-T-28800 C par. 3.9.2.3. tested, par. 4.5.5.1.1.
Limits of operation temperature range	0 ...50°C	Idem.
Non-operating (Storage)	- 40°C/+ 75°C	MIL-T-28800 C par. 3.9.2.3. tested, par. 4.5.5.1.1.
* Max. humidity		
operating non-operating	95% RH	10...30°C
* Max. altitude		MIL-T-28800 C par. 3.9.3. tested, par. 4.5.5.2.
Operating	4,5 km (15000 feet)	Maximum (Operating Temperature derated 3°C for each km, for each 3000 feet, above sea level).
Non-operating (storage)	12 km (40 000 feet)	

CHARACTERISTICS	SPECIFICATION	ADDITIONAL INFORMATION
* Vibration (operating)		MIL-T-28800 C par. 3.9.4.1. tested, par. 4.5.5.3.1.
Freq. 5...15 Hz Sweep Time	7 min.	
Excursion (p-p)	1,5 mm	
Max Acceleration	7 m/s^2 (0,7 x g)	@ 15 Hz
Freq. 15...25 Hz Sweep Time	3 min.	
Excursion (p-p)	1 mm	
Max Acceleration	13 m/s^2 (1,3 x g)	@ 25 Hz
Freq. 25...55 Hz Sweep Time	5 min.	
Excursion (p-p)	0,5 mm	
Max Acceleration	30 m/s^2 (3 x g)	@ 55 Hz
Resonance Dwell	10 min.	@ each resonance freq. (or @ 33 Hz if no resonance was found). Excursion, 9.7.1. to 9.7.2.
* Shock (operating)		MIL-T-28800 C par. 3.9.5.1. tested, par. 4.5.5.4.1.
Amount of shocks		
total	18	
each axis	6	(3 in each direction).
Shock Wave-form	Half sine-wave	
Duration	11 ms	11 ms
Peak Acceleration	300 m/s^2 (30 x g)	
* Bench handling		Mil-T-28800 C par. 3.9.5.3. tested, par. 4.5.5.4.3.
Meets requirements of	MIL-STD-810 method 516, proced. V	
* Salt Atmosphere		MIL-T-28800C par. 3.9.8.1 tested, par. 4.5.6.2.1.
Structural parts meet requirements of	MILT-STD-810 methode 509, proced. I salt solution 20%	
* EMI (Electronic Magnetic Interference)		
meets requirements of	MIL-STD-461 CLASS B	Applicable requirements of part 7 : CE03, CS01, CS02, CS06, RE02, RS03
	VDE 0871 and VDE 0875 Grenzwertklasse B	

CHARACTERISTICS	SPECIFICATION	ADDITIONAL INFORMATION
* Magnetic Radiated Susceptibility Maximum Deflection Factor		Tested in conformity with IEC 351-1 par. 5.1.3.1. Measured with instrument in a homogeneous magnetic field (in any direction with respect to instrument) with a flux intensity (p-p value) of 1,42 mT (14,2 gauss) and of symmetrical sine-wave form with a frequency of 45...66Hz.

2.8 SAFETY

* Meets requirements of	IEC 348 CLASS I VDE 0411	Except for power cord, unless shipped with Universal European power plug.
	UL 1244 CSA 556 B	Except for power cord, unless shipped with North American power plug.
* Max. X-Radiation		Measured @ 5 cm from surface of instrument for a target area of 10 cm^2
* Recovery time	15 min.	-10°C ----> + 25°C ambient temp.
	30 min.	-20°C ----> + 25°C ambient temp.
	45 min.	-30°C ----> + 25°C ambient temp.
	60 min.	-40°C ----> + 40°C ambient temp.

3. INTRODUCTION TO CIRCUIT DESCRIPTION AND BLOCK DIAGRAM DESCRIPTION

3.1 INTRODUCTION TO CIRCUIT DESCRIPTION

The functioning of the circuits is described per printed-circuit board (p.c.b.). For every p.c.b. a separate chapter (4-10) is available containing the lay out of the p.c.b., the associated circuit diagram(s) and the circuit description.

Location of electrical parts

The item numbers of C...., R...., V...., N...., D.... and K.... have been divided into groups which relate to the circuit and the printed-circuit board according to the following table:

Item number	unit no.	Printed-circuit board	Figure
1000-1999	A1	Attenuator unit	4
2000-2999	A2	Pre-amplifier unit	5
3000-3999	A3	XYZ amplifier unit	6
4000-4999	A4	Time-base unit	7
5000-5999	A5	CRT control unit	8
6000-6999	A6	Power supply	9
7000-7999	A7	Front unit	10
8000-8999	A8	LCD unit	10

3.2 BLOCK DIAGRAM DESCRIPTION (see figure 3.1).

3.2.1 Introduction

This block diagram description is based around all the important functional blocks and their interconnections. The interconnections between all p.c.b.'s are given in the interconnection diagram of figure 14.5. In order to assist in cross-reference with the circuit diagrams, the blocks include the item numbers of the active components they contain.
Furthermore, the blocks are grouped together per printed-circuit board, or a part of it. To facilitate reference, the names of the functional blocks are given in text in CAPITALS.
Signal waveforms are also indicated at block interconnections where useful.
In this instrument almost all the switches (UP-DOWN controls, softkeys and potentiometer UNCAL switches) influence the oscilloscope circuits via a microcomputer (uC) system.

3.2.2 Control unit

Because the functional description of the control unit (see chapter 10) is almost simular to the blockdiagram description, no specific attention is given in this chapter to this unit.

3.2.3 Attenuator unit

The vertical channels A and B for the signals to be displayed are identical. Each channel comprises an input SIGNAL COUPLING for AC/DC, a HIGH IMPEDANCE ATTENUATOR which gives a grounded input or a signal attenuation of x1-x10 or x100, an IMPEDANCE CONVERTER, a LOW IMPEDANCE ATTENUATOR which gives signal attenuation of x1-x2,5 or x5 and a GAIN x1-x10
AMPLIFIER block, incorporated with the CONTINUOUS CIRCUIT. This block has a variable gain, influenced by the front-panel VAR control. The gain is also increased by x10 in order to obtain 2-5 and 10mV settings.

Similar to the vertical channels, the external channel attenuator also has an input SIGNAL COUPLING, HIGH IMPEDANCE ATTENUATOR and IMPEDANCE CONVERTER in line. However, the external channel has only x1 attenuation and no LOW IMPEDANCE ATTENUATOR. The output of the external channel is fed to both MTB and DTB TRIGGER PRE-AMPLIFIERS.

All blocks that are capable of working in different modes are controlled by the control A or control B signals. These signals are generated by the CH.A CONTROL or CH.B CONTROL blocks.

3.2.4 Pre-amplifier unit

This unit incorporates the signal splitters for the vertical channels A and B, the trigger view amplifier, the trigger circuits for the MTB and DTB and the chopper oscillator circuit. All these functions are controlled by the control XYP and control XYA signals, generated by the X-Y CONTROL blocks.

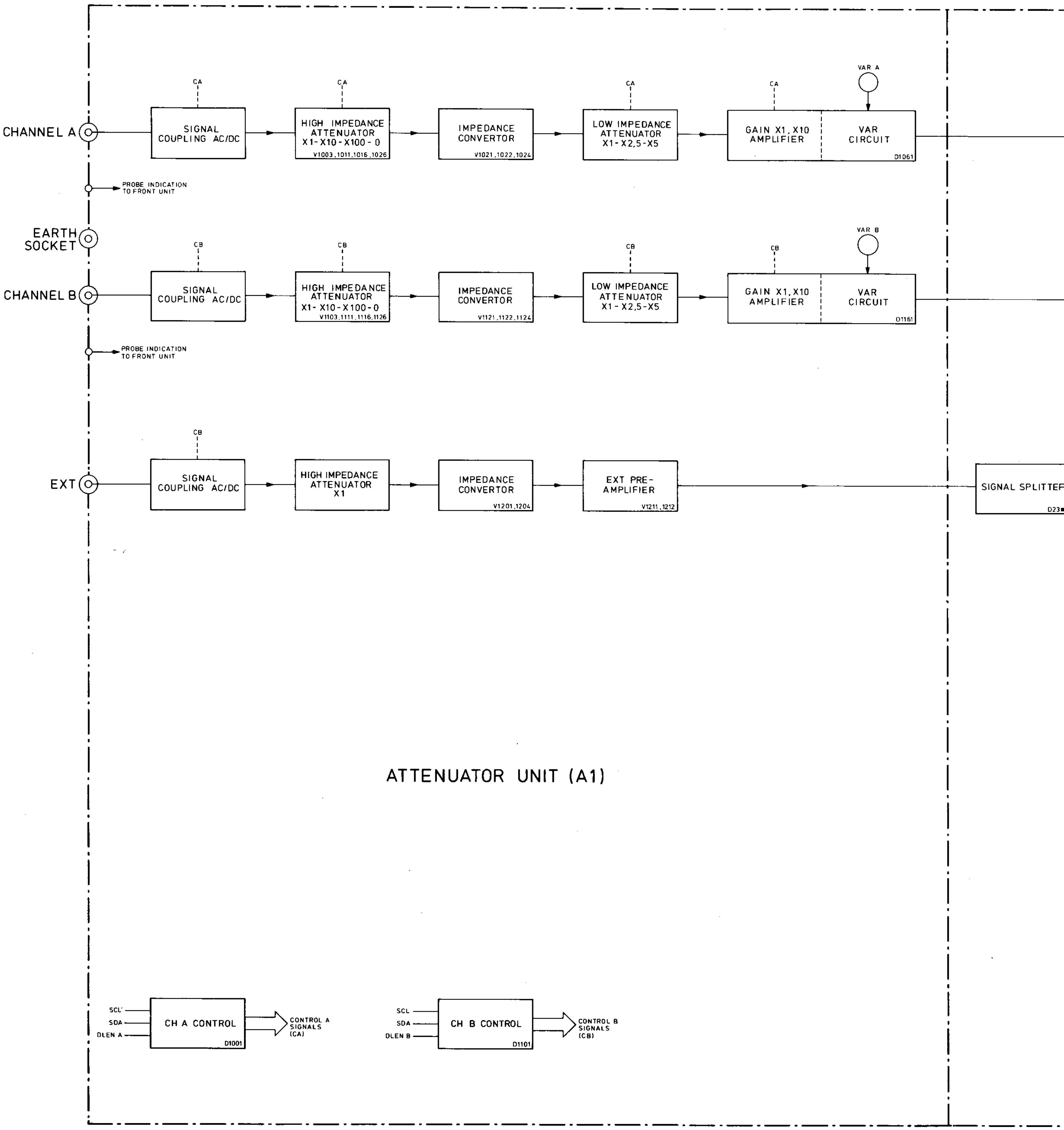
CA
CA
CA
CA
VAR A
CHANNEL A
SIGNAL COUPLING AC/DC
HIGH IMPEDANCE ATTENUATOR X1-X10-X100-0
V1003,1011,1016,1026
IMPEDANCE CONVERTOR
V1021,1022,1024
LOW IMPEDANCE ATTENUATOR X1-X2,5-X5
GAIN X1,X10 AMPLIFIER
VAR CIRCUIT
D1061
PROBE INDICATION TO FRONT UNIT
EARTH SOCKET
CB
CB
CB
CB
VAR B
CHANNEL B
SIGNAL COUPLING AC/DC
HIGH IMPEDANCE ATTENUATOR X1-X10-X100-0
V1103,1111,1116,1126
IMPEDANCE CONVERTOR
V1121,1122,1124
LOW IMPEDANCE ATTENUATOR X1-X2,5-X5
GAIN X1,X10 AMPLIFIER
VAR CIRCUIT
D1161
PROBE INDICATION TO FRONT UNIT
CB
EXT
SIGNAL COUPLING AC/DC
HIGH IMPEDANCE ATTENUATOR X1
IMPEDANCE CONVERTOR
V1201,1204
EXT PRE-AMPLIFIER
V1211,1212
SIGNAL SPLITTE
D23
ATTENUATOR UNIT (A1)
SCL
SDA
DLEN A
CH A CONTROL
D1001
CONTROL A SIGNALS (CA)
SCL
SDA
DLEN B
CH B CONTROL
D1101
CONTROL B SIGNALS (CB)

Figure 3.1 Block diagram

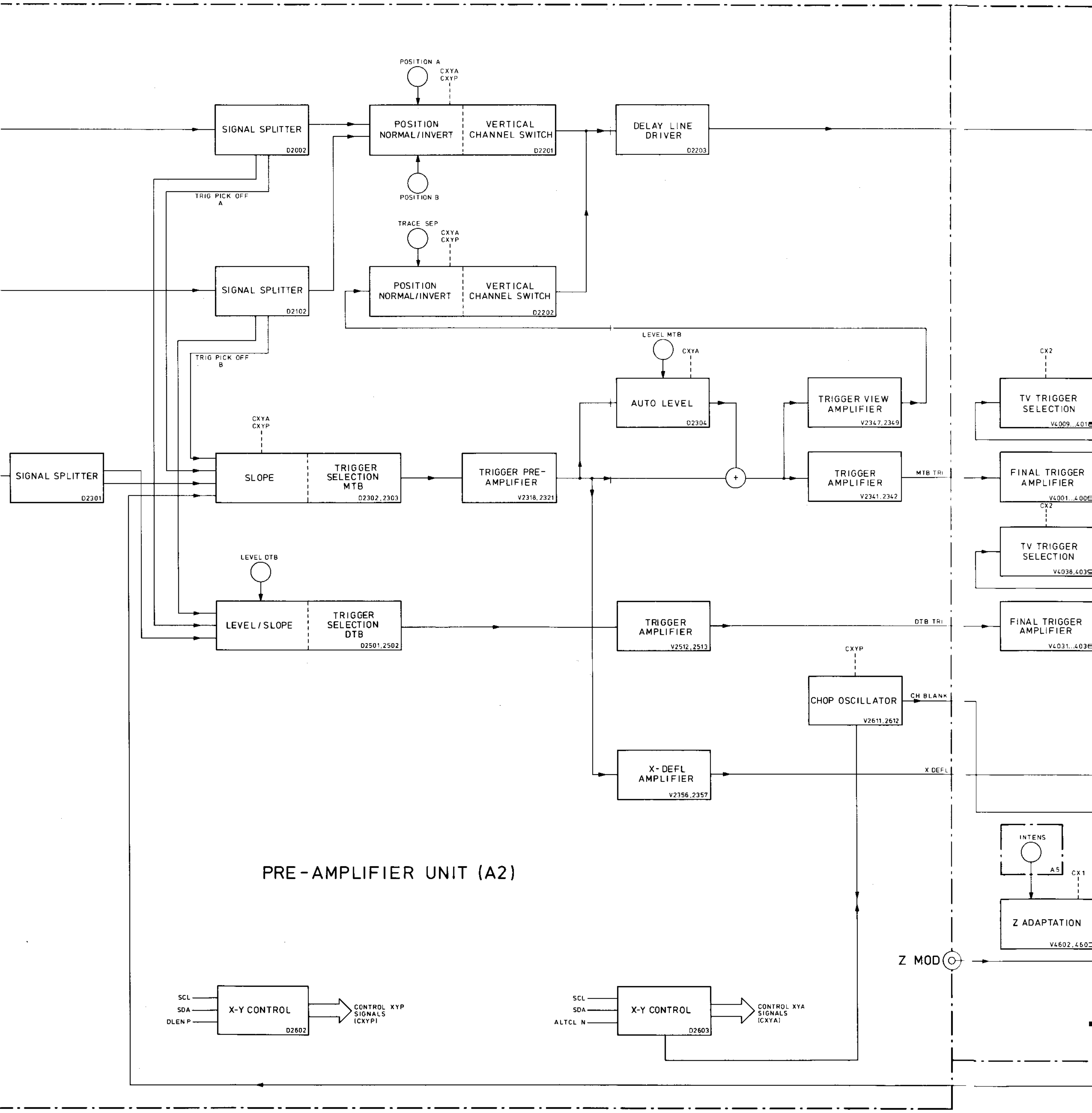
POSITION A
CXYA
CXYP
SIGNAL SPLITTER
D2002
POSITION NORMAL/INVERT
VERTICAL CHANNEL SWITCH
D2201
DELAY LINE DRIVER
D2203
POSITION B
TRIG PICK OFF A
TRACE SEP
CXYA
CXYP
SIGNAL SPLITTER
D2102
POSITION NORMAL/INVERT
VERTICAL CHANNEL SWITCH
D2202
TRIG PICK OFF B
LEVEL MTB
CXYA
AUTO LEVEL
D2304
TRIGGER VIEW AMPLIFIER
V2347,2349
CX2
TV TRIGGER SELECTION
V4009...401
CXYA
CXYP
SIGNAL SPLITTER
D2301
SLOPE
TRIGGER SELECTION MTB
D2302,2303
TRIGGER PRE-AMPLIFIER
V2318,2321
+
TRIGGER AMPLIFIER
V2341,2342
MTB TRI
FINAL TRIGGER AMPLIFIER
V4001...400
CX2
TV TRIGGER SELECTION
V4038,403
LEVEL DTB
LEVEL/SLOPE
TRIGGER SELECTION DTB
D2501,2502
TRIGGER AMPLIFIER
V2512,2513
DTB TRI
FINAL TRIGGER AMPLIFIER
V4031...403
CXYP
CHOP OSCILLATOR
V2611,2612
CH BLANK
X-DEFL AMPLIFIER
V2356,2357
X DEFL
INTENS
A5
CX1
PRE-AMPLIFIER UNIT (A2)
Z ADAPTATION
V4602,460
Z MOD
SCL
SDA
DLEN P
X-Y CONTROL
D2602
CONTROL XYP SIGNALS (CXYP)
SCL
SDA
ALTCL N
X-Y CONTROL
D2603
CONTROL XYA SIGNALS (CXYA)

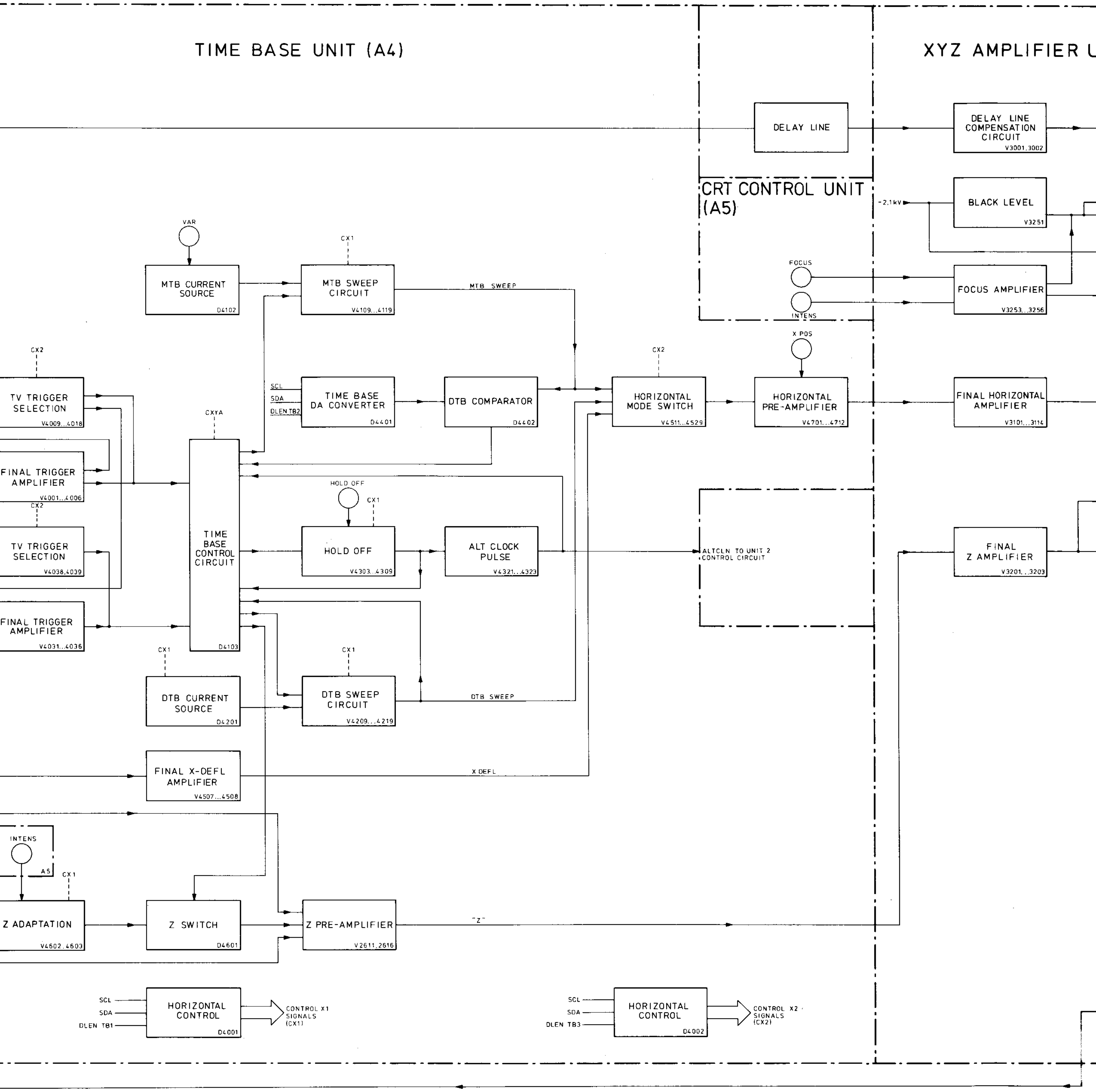
TIME BASE UNIT (A4)
XYZ AMPLIFIER U
DELAY LINE
DELAY LINE COMPENSATION CIRCUIT
V3001,3002
CRT CONTROL UNIT (A5)
-2,1kV
BLACK LEVEL
V3251
FOCUS
INTENS
FOCUS AMPLIFIER
V3253...3256
VAR
MTB CURRENT SOURCE
D4102
CX1
MTB SWEEP CIRCUIT
V4109...4119
MTB SWEEP
CX2
TV TRIGGER SELECTION
V4009...4018
SCL
SDA
DLEN TB2
TIME BASE DA CONVERTER
D4401
DTB COMPARATOR
D4402
CX2
HORIZONTAL MODE SWITCH
V4511...4529
X POS
HORIZONTAL PRE-AMPLIFIER
V4701...4712
FINAL HORIZONTAL AMPLIFIER
V3101...3114
CXYA
FINAL TRIGGER AMPLIFIER
V4001...4006
CX2
HOLD OFF
CX1
TV TRIGGER SELECTION
V4038,4039
TIME BASE CONTROL CIRCUIT
HOLD OFF
V4303...4309
ALT CLOCK PULSE
V4321...4323
ALTCLN TO UNIT 2 CONTROL CIRCUIT
FINAL Z AMPLIFIER
V3201...3203
FINAL TRIGGER AMPLIFIER
V4031...4036
D4103
CX1
CX1
DTB CURRENT SOURCE
D4201
DTB SWEEP CIRCUIT
V4209...4219
DTB SWEEP
FINAL X-DEFL AMPLIFIER
V4507...4508
X DEFL
INTENS
A5
CX1
Z ADAPTATION
V4602,4603
Z SWITCH
D4601
Z PRE-AMPLIFIER
V2611,2616
"Z"
SCL
SDA
DLEN TB1
HORIZONTAL CONTROL
D4001
CONTROL X1 SIGNALS (CX1)
SCL
SDA
DLEN TB3
HORIZONTAL CONTROL
D4002
CONTROL X2 SIGNALS (CX2)

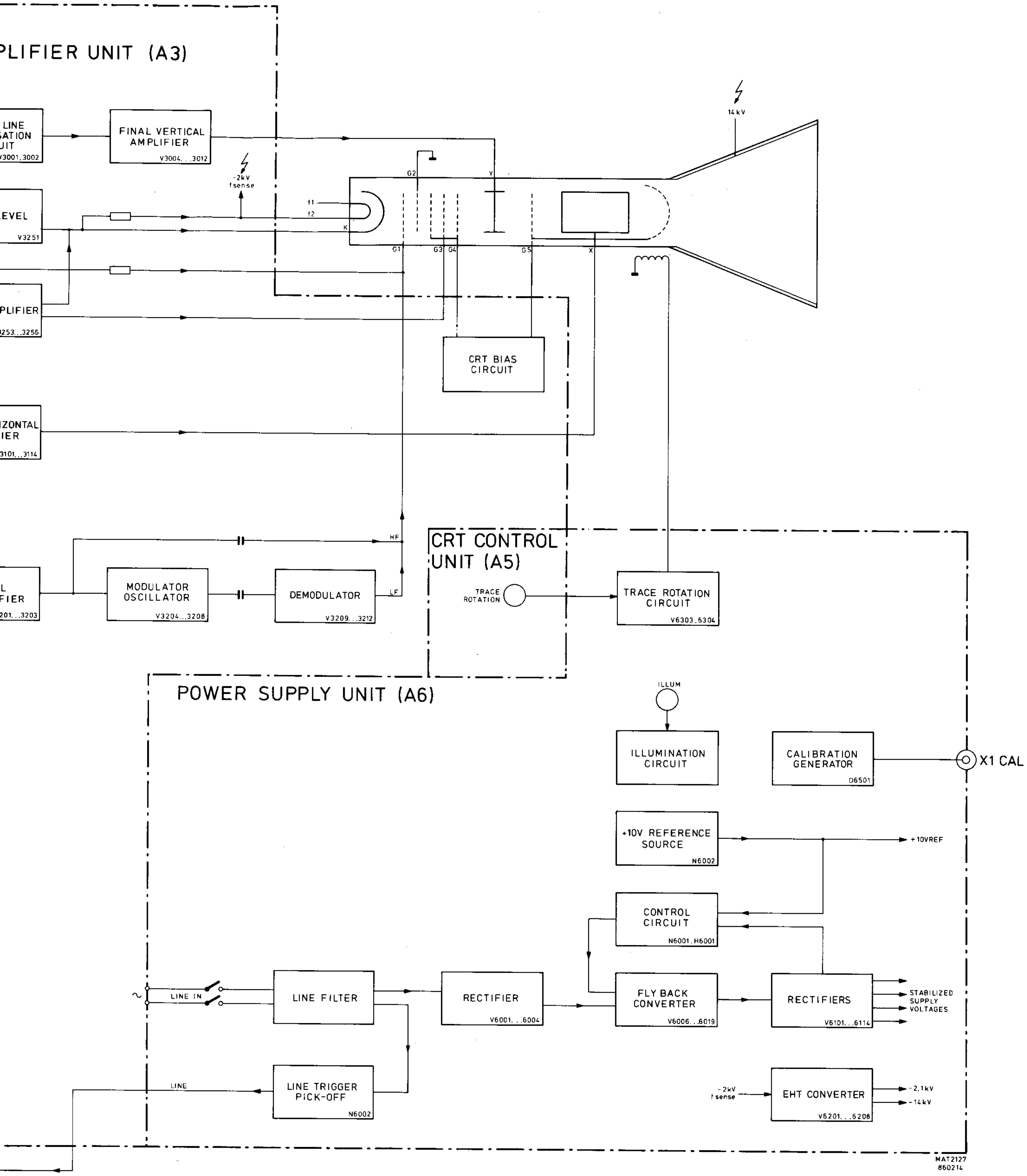
PLIFIER UNIT (A3)
LINE
SATION
UIT
V3001,3002
FINAL VERTICAL AMPLIFIER
V3004. . .3012
-2kV
f sense
EVEL
V3251
PLIFIER
3253. . .3256
IZONTAL
IER
3101. . .3114
L
FIER
201. . .3203
MODULATOR OSCILLATOR
V3204. . .3208
DEMODULATOR
V3209. . .3212
HF
LF
f1
f2
K
G1
G2
G3
G4
G5
Y
X
14kV
CRT BIAS CIRCUIT
CRT CONTROL UNIT (A5)
TRACE ROTATION
TRACE ROTATION CIRCUIT
V6303, 6304
POWER SUPPLY UNIT (A6)
ILLUM
ILLUMINATION CIRCUIT
CALIBRATION GENERATOR
D6501
X1 CAL
+10V REFERENCE SOURCE
N6002
+10VREF
CONTROL CIRCUIT
N6001, H6001
~
LINE IN
LINE FILTER
RECTIFIER
V6001. . .6004
FLY BACK CONVERTER
V6006. . .6019
RECTIFIERS
V6101. . .6114
STABILIZED SUPPLY VOLTAGES
LINE
LINE TRIGGER PICK-OFF
N6002
-2kV
f sense
EHT CONVERTER
V6201. . .6208
-2,1kV
-14kV
MAT2127
860214

* Vertical channels A and B:

Both channels are completely identical and receive their input signals from the ATTENUATOR UNIT. This signal is applied to the SIGNAL SPLITTER, which has three outputs:

- two outputs applied to the SLOPE/TRIGGER SELECTIONS for MTB or DTB triggering.
- a third output routed to the POSITION/NORMAL-INVERT block.

This block is incorporated with the VERTICAL CHANNEL SWITCH in a single IC. Vertical shift of the displayed signal is achieved by the front-panel POSITION control. The output of this block and the output of the TRIGGER VIEW channel are routed via the DELAY LINE DRIVER to the DELAY LINE. The TRIGGER VIEW channel enables display of the MTB trigger source and can be used as a third vertical channel with limited specifications. The front-panel TRACE SEP control influences the position of the trace of the DTB signals related to the trace of the MTB signal.

* MTB trigger circuit:

The SLOPE/TRIGGER SELECTION block receives a trigger signal from one of the vertical channels A or B, from the EXT SIGNAL SPLITTER or from the LINE TRIGGER PICK-OFF. Inverting of the trigger signal is controlled by the CXYA signalsINVAM and INVBM to obtain the MTB slope function.Routed via the TRIGGER PRE-AMPLIFIER, block the signal is split up into three different paths:

- after summation of the LEVEL signal, direct to the TRIGGER AMPLIFIER
- to the AUTO LEVEL block. This block contains the different trigger facilities and levelling of the trigger signal is influenced by the front-panel LEVEL control. The output of this path is routed again to the summation point to influence the direct trigger signal.
- to the X-DEFL AMPLIFIER for X-deflection facility. This block incorporates a phase correction circuit for the X-Y display.

  The TRIGGER AMPLIFIER feeds the MTB trigger signal to the time-base unit. The trigger signal from the summation point is also routed via the TRIGGER VIEW AMPLIFIER to the vertical CHANNEL SWITCH stage to display this signal.

* DTB trigger circuit:

Basically, for triggering purposes this circuit is identical to the MTB trigger circuit. This circuit also has a SLOPE/TRIGGER SELECTION and TRIGGER AMPLIFIER block. However, the DTB trigger circuit has no LINE trigger or AUTO LEVEL facility. The LEVEL control directly influences the SLOPE/TRIGGER SELECTION block.

* Chopper oscillator circuit:

A square-wave signal for chopper blanking and vertical switching is generated in the CHOP OSCILLATOR. For chopper blanking the signal is routed to the Z PRE-AMPLIFIER on the time-base unit.

3.2.5 Time-base unit

This unit incorporates the main time-base (MTB), the delayed time-base (DTB), the horizontal amplifier and the Z amplifier circuit. All functions are controlled by the CX1 and CX2 signals, generated by the HORIZONTAL CONTROL CIRCUIT blocks.

* Main time-base (MTB):

The MTB trigger signal can be either directly routed to the TIME-BASE CONTROL CIRCUIT or first routed via the TV TRIGGER SELECTION for the TV trigger coupling. When in the AUTO mode, in the absence of trigger signals, the MTB will be free running.

The MTB CURRENT SOURCE applies the sawtooth charging current to the MTB sweep circuit. This block generates the MTB sawtooth signal, which is routed to the HORIZONTAL DISPLAY MODE SWITCH.

The HOLD OFF and the ALT CLOCK PULSE blocks are also under control of the TIME BASE CONTROL CIRCUIT. Hold off time is varied by the front-panel HOLD OFF control. The output of the HOLD OFF block is routed to the TIME-BASE CONTROL CIRCUIT again.

The ALTCLN-pulse is applied to the PRE-AMPLIFIER UNIT.

3.2.6 XYZ unit

This unit comprises the final amplifiers for the vertical (Y) and horizontal (X) deflection and for the blanking (Z) circuit. In addition to this, the CRT control circuits are also incorporated in the unit.

* Final vertical amplifier:

The output signal from the pre-amplifier unit is first routed via the DELAY LINE to give sufficient delay to ensure that the steep leading edges of fast signals are displayed and then fed to the DELAY LINE COMPENSATION. This block compensates the signal for distortion originating in the DELAY LINE before it is applied to the FINAL VERTICAL AMPLIFIER. The output of the FINAL VERTICAL AMPLIFIER feeds the vertical deflection plates of the CRT.

* Final horizontal amplifier:

The horizontal deflection signal is routed to the FINAL HORIZONTAL AMPLIFIER, the output of which feeds the horizontal deflection plates of the CRT.

* Blanking circuit:

The output signal from the Z PRE-AMPLIFIER of the time-base unit, that determines trace blanking or unblanking and modulation is routed to the FINAL Z-AMPLIFIER. After amplification the blanking signal is split into two paths:

- the h.f. signals are fed via a high voltage capacitor to grid G1 of the CRT.
- the l.f. signals are used to modulate the amplitude of an oscillator wave-form, which then passes via another high voltage capacitor and is demodulated in the DEMODULATOR block to retrieve the original signal.

Note that the original h.f. and l.f. signals are again recombined on the grid G1.

* CRT control circuits:

The FOCUS AMPLIFIER block is influenced by both front-panel FOCUS and INTENS controls to provide a focus that is independent of the intensity, and drives the focusing grid G3 of the CRT.

The -100 V BLACK LEVEL block provides the correct presetting of the cathode voltage.

The CRT BIAS gives a d.c. voltage to the grids G4 and G5 to provide an optional adjustment for geometry and astigmatism.

3.2.7 Power supply unit

The mains input voltage is filtered and then applied to the RECTIFIER block to obtain a d.c. voltage source. Another output of the LINE FILTER block is routed via the LINE TRIGGER PICK-OFF and serves as a MTB LINE trigger signal. The rectified mains source is routed to the FLYBACK CONVERTER, which generates the necessary voltages for the oscilloscope circuits. Each supply voltage is rectified in the RECTIFIERS block.
The LOW-voltage supplies are stabilized by the CONTROL circuit to the converter.
The +10 V REF supply serves as a low-voltage reference and is generated in the +10 V REFERENCE source block. This reference voltage is also fed to the different circuits on the power supply or in the oscilloscope.

The EHT CONVERTER generates the -14 kV for the post-accelerator anode of the CRT and the -2 kV for the cathode circuits.

* Auxiliary circuits:

The CALIBRATION GENERATOR generates the CAL voltage, which is applied to the output socket X1. The CAL voltage has a 1,2 V p-p level with a frequency of 2kHz square wave.

The ILLUMINATION CIRCUIT determines the amount of current passed to the graticule illumination lamp of the CRT controlled by the ILLUM control on the front-panel.

The TRACE ROTATION CIRCUIT determines the strength and sense of the current passed to the trace rotation coil around the neck of the CRT. The current is influenced by the front-panel screwdriver operated TRACE ROT control.

4. ATTENUATOR UNIT (A1)

4.1 VERTICAL ATTENUATORS

The A and B channel attenuators are identical: therefore only channel A is described.

All relay and FET switches are controlled by the microcomputer via the I^2C bus. The TEA 1017 converts this serial DATA into the parallel control signals for all relay or FET switches. A list of the control lines for all attenuator settings is given in the table below.

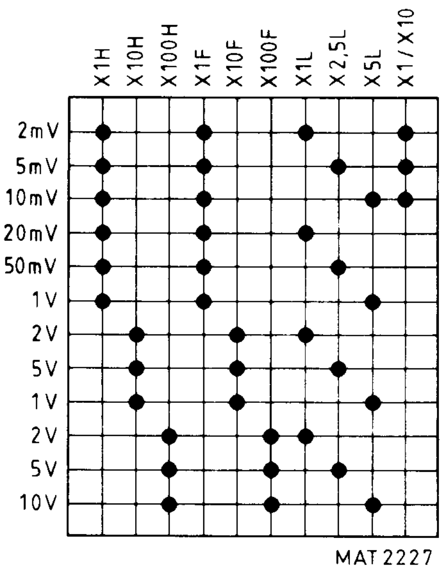

	X1H	X10H	X100H	X1F	X10F	X100F	X1L	X2,5L	X5L	X1/X10
2mV	●			●			●			●
5mV	●			●				●		●
10mV	●			●					●	●
20mV	●			●			●			
50mV	●			●				●		
1V	●			●					●	
2V		●			●		●			
5V		●			●			●		
1V		●			●				●	
2V			●			●	●			
5V			●			●		●		
10V			●			●			●	

Figure 4.1 Table of attenuator settings

The channel A attenuator consists of in five stages:

Input coupling, where depending on the relay K1001 position, the input signal can either be d.c.-coupled (relay activated) or a.c.-coupled (relay not activated).

High impedance attenuator with three attenuator stages for the x1, x10 and x100 attenuation. The l.f. part of each stage is split via a resistor divider and routed via N1001 and V1019 to the output of this stage, where it is re-connected with the h.f. part of the input signal. Potentiometers R1036 (TRACE jump) serves as a offset compensation for N1001.

	RELAY	FET	TRIMMER FOR L.F. SQUARE WAVE	L.F. RESISTOR DIVIDER
x 1	K1004	V1011	C1033	--
x 10	K1003	V1006	C1029	R1007-R1011
x100	K1002	V1003	C1023	R1019-R1004

Note that, when "0" (GND-A) is selected, the output is connected to ground via FET V1016 and all other relay- and FET switches are switched off.

The impedance converter serves as an inverting buffer circuit for the high impedance attenuator. For the l.f.-feedback the output signal of this stage is routed to the l.f. summation point N1001-2.

The low impedance attenuator reduces the gain by x1, x2.5 and x5, depending on which relay is activated.

	RELAY	RESISTOR DIVIDER
x1	K1006	--
x2.5	K1007	R1053 vs R1056, R1057 and R1058
x5	K1008	R1053, R1056 and R1057 vs R1058

The continuous circuit (OQ0203), the differential input voltages of which are fed to pins 4 and 5.
This stage comprises the following functions:

- Continuously variable control (pin 11).
- Gain x1 (pin 2 and 3) with offset adjustment R1064 (R1164) and gain adjustment R1069 (R1169).
- Gain x10 (pin 6 and 7) with offset adjusting R1072 (R1172) and gain adjustment R1076 (R1176).
- x1/x10 control, (pin 10) to select the 2,5 and 10 mV/DIV settings.

The differential output current from pin 13 and pin 14 is routed via a common-base circuit V1063, V1064 and applied to the pre-amplifier unit.

4.2 EXTERNAL INPUT

The external input can be subdivided into four stages:

Input coupling, basically similar to the ch.A input coupling.

High impedance attenuator for the x1 attenuator only, where the l.f. square-wave can be adjusted with trimmer C1206. The l.f. part is routed to the summation point N1201-2. R1217 serves as an offset compensation for N1201. For l.f.-feedback the output of the impedance converter is also routed to this summation point.
Note that the output of this stage is also a reconstituted version of the input signal.

Impedance converter, is basic similar to the ch.A impedance converter.

The differential amplifier V1211, V1212 converts the voltage from emitter-follower V1209 into the differential current signals EXT+ and EXT-. This signal is applied to the pre-amplifier unit and serves as external trigger signal or as an external deflection signal.
The current for this stage is applied from current source V1213.

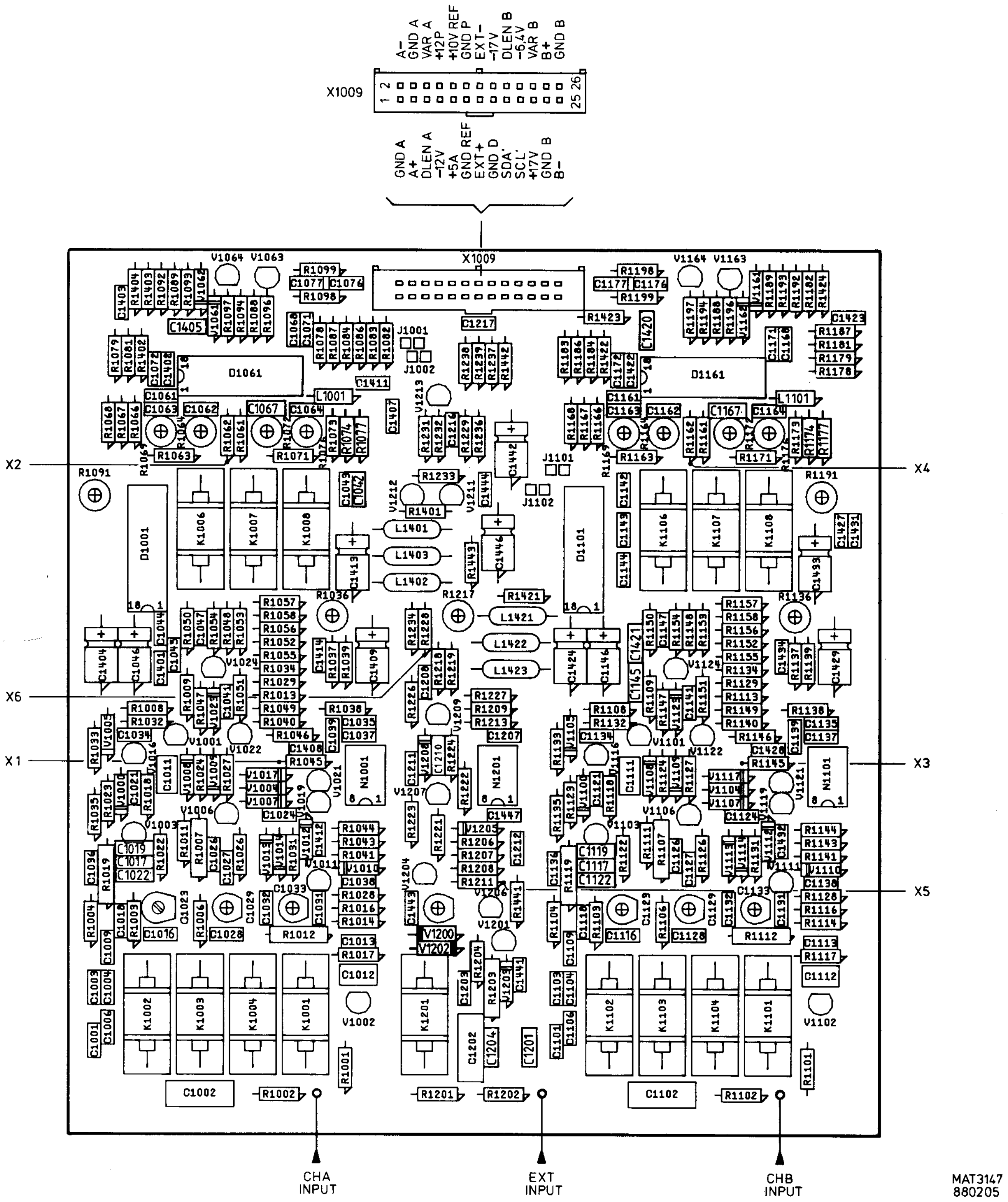
A−
GND A
VAR A
+12P
+10V REF
GND P
EXT−
−17V
DLEN B
−6,4V
VAR B
B+
GND B
X1009
1
2
25
26
GND A
A+
DLEN A
−12V
+5A
GND REF
EXT+
GND D
SDA'
SCL'
+17V
GND B
B−
X1009
V1064
V1063
V1164
V1163
D1061
D1161
D1001
D1101
K1006
K1007
K1008
K1106
K1107
K1108
L1401
L1403
L1402
L1421
L1422
L1423
N1001
N1201
N1101
K1002
K1003
K1004
K1001
K1201
K1102
K1103
K1104
K1101
C1002
C1102
X1
X2
X3
X4
X5
X6
CHA INPUT
EXT INPUT
CHB INPUT
MAT3147
880205

Figure 4.2 Attenuator unit p.c.b.

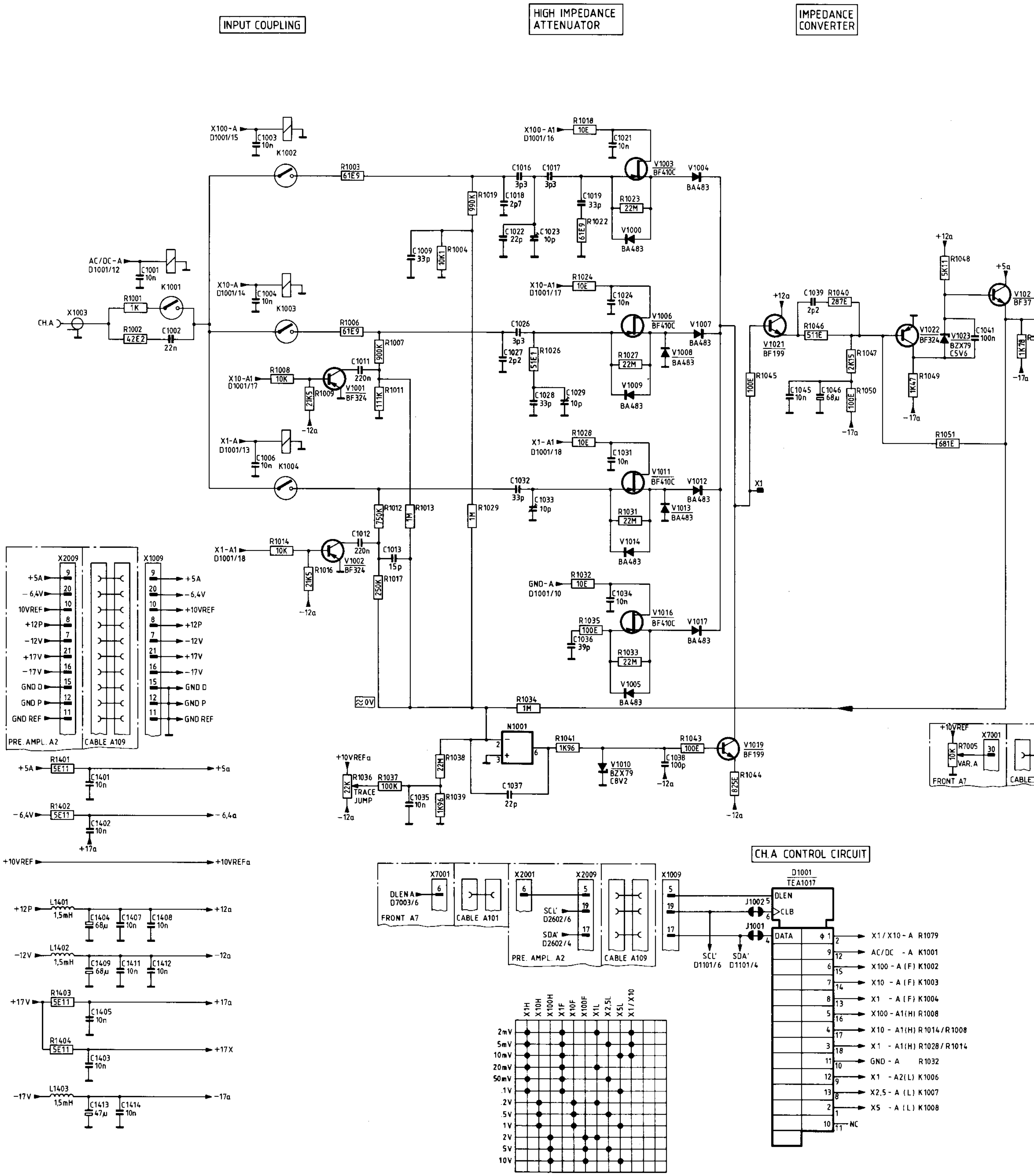
INPUT COUPLING
HIGH IMPEDANCE ATTENUATOR
IMPEDANCE CONVERTER
CH.A CONTROL CIRCUIT
CH.A
X1003
K1001
K1002
K1003
K1004
R1001 1K
R1002 42E2
C1002 22n
AC/DC-A D1001/12
X100-A D1001/15
X10-A D1001/14
X1-A D1001/13
X100-A1 D1001/16
X10-A1 D1001/17
X1-A1 D1001/18
GND-A D1001/10
V1001 BF324
V1002 BF324
V1003 BF410C
V1006 BF410C
V1011 BF410C
V1016 BF410C
V1021 BF199
V1022 BF324
V1019 BF199
V1023 BZX79 C5V6
V1010 BZX79 C8V2
N1001
R1034 1M
R1036 22K TRACE JUMP
+10VREFa
X1
D1001 TEA1017
DLEN
CLB
DATA
J1002
J1001
X1/X10-A R1079
AC/DC -A K1001
X100-A (F) K1002
X10 -A (F) K1003
X1 -A (F) K1004
X100-A1(H) R1008
X10 -A1(H) R1014/R1008
X1 -A1(H) R1028/R1014
GND-A R1032
X1 -A2(L) K1006
X2,5-A (L) K1007
X5 -A (L) K1008
NC
X2009
X1009
X2001
X7001
PRE. AMPL. A2
CABLE A109
CABLE A101
FRONT A7
DLENA D7003/6
SCL' D2602/6
SDA' D2602/4
SCL' D1101/6
SDA' D1101/4
+5A
-6,4V
10VREF
+12P
-12V
+17V
-17V
GND D
GND P
GND REF
+5a
-6,4a
+10VREFa
+12a
-12a
+17a
+17X
-17a
L1401 1,5mH
L1402 1,5mH
L1403 1,5mH
R1401 5E11
R1402 5E11
R1403 5E11
R1404 5E11
R7005 10K VAR.A

	X1H	X10H	X100H	X1F	X10F	X100F	X1L	X2,5L	X5L	X1/X10		
2mV	●			●			●			●		
5mV	●			●				●		●		
10mV	●			●					●	●		
20mV	●			●			●					
50mV	●			●				●				
.1V	●			●					●			
.2V		●			●		●					
.5V		●			●			●				
1V		●			●				●			
2V			●			●	●					
5V			●			●		●				
10V			●			●			●			

Figure 4.3 Circuit diagram of attenuator, ch. A

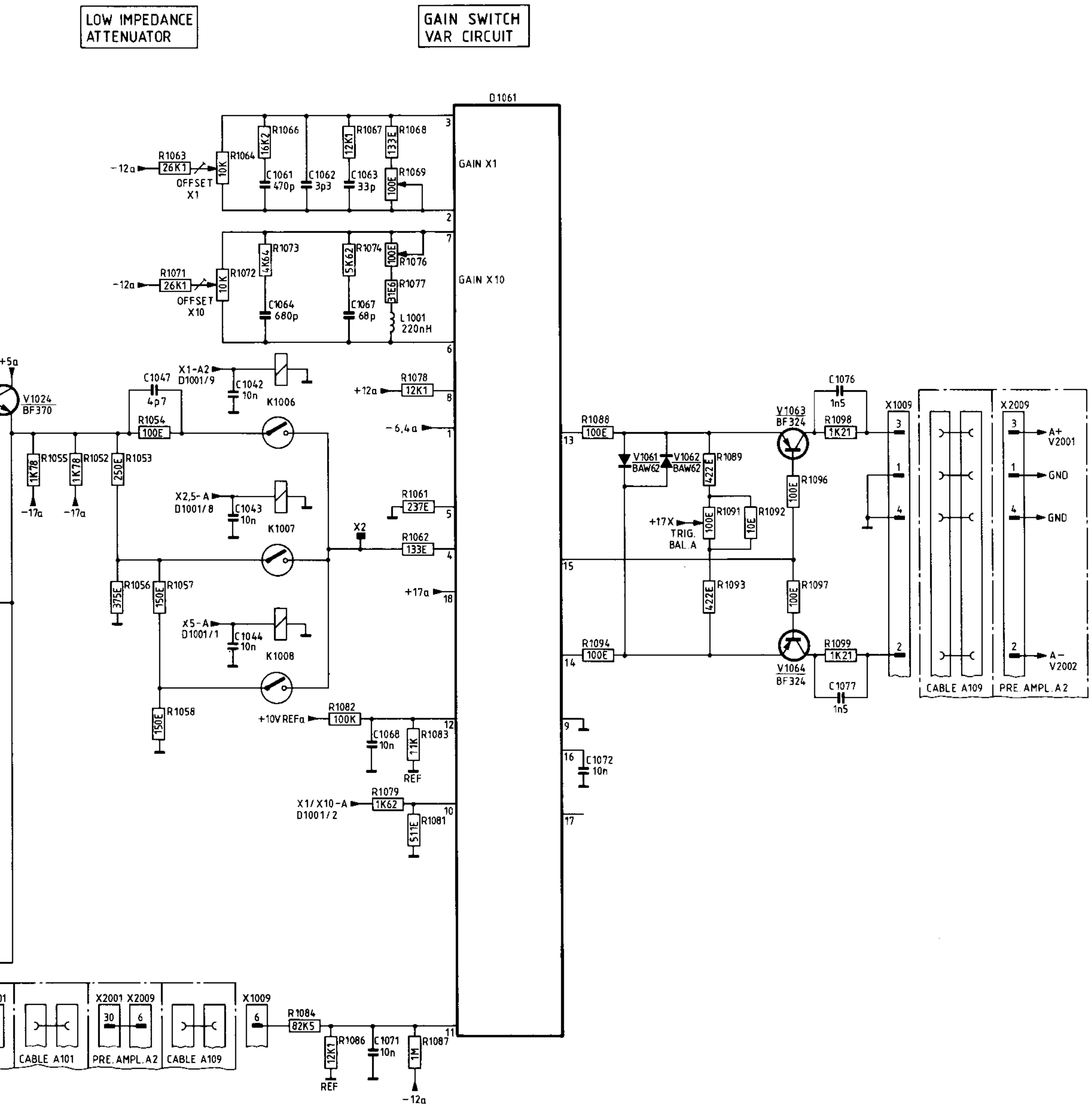
LOW IMPEDANCE ATTENUATOR
GAIN SWITCH VAR CIRCUIT
D1061
GAIN X1
GAIN X10
R1063 26K1
R1064 10K
OFFSET X1
R1066 16K2
R1067 12K1
R1068 133E
R1069 100E
C1061 470p
C1062 3p3
C1063 33p
R1071 26K1
R1072 10K
OFFSET X10
R1073 4K64
R1074 5K62
R1076 100E
R1077 51E6
C1064 680p
C1067 68p
L1001 220nH
-12a
+5a
V1024 BF370
C1047 4p7
R1054 100E
R1055 1K78
R1052 1K78
R1053 250E
-17a
X1-A2 D1001/9
C1042 10n
K1006
X2,5-A D1001/8
C1043 10n
K1007
X5-A D1001/1
C1044 10n
K1008
R1056 375E
R1057 150E
R1058 150E
X2
+12a
R1078 12K1
-6,4a
R1061 237E
R1062 133E
+17a
+10V REFa
R1082 100K
C1068 10n
R1083 11K
REF
X1/X10-A D1001/2
R1079 1K62
R1081 511E
R1084 82K5
R1086 12K1
C1071 10n
R1087 1M
C1072 10n
R1088 100E
R1094 100E
V1061 BAW62
V1062 BAW62
R1089 422E
+17X TRIG. BAL. A
R1091 100E
R1092 10E
R1093 422E
V1063 BF324
V1064 BF324
R1096 100E
R1097 100E
C1076 1n5
R1098 1K21
C1077 1n5
R1099 1K21
X1009
X2009
A+ V2001
GND
GND
A- V2002
CABLE A109
PRE. AMPL. A2
X2001 X2009
CABLE A101
PRE. AMPL. A2
CABLE A109
X1009

REF NO.	TYPE
D1001	TEA1017
D1061	OQ0203
N1001	μA714

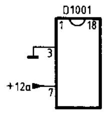
D1001
1
18
3
+12a
7

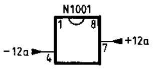
N1001
1
8
-12a
4
7
+12a

MAT3169
880212

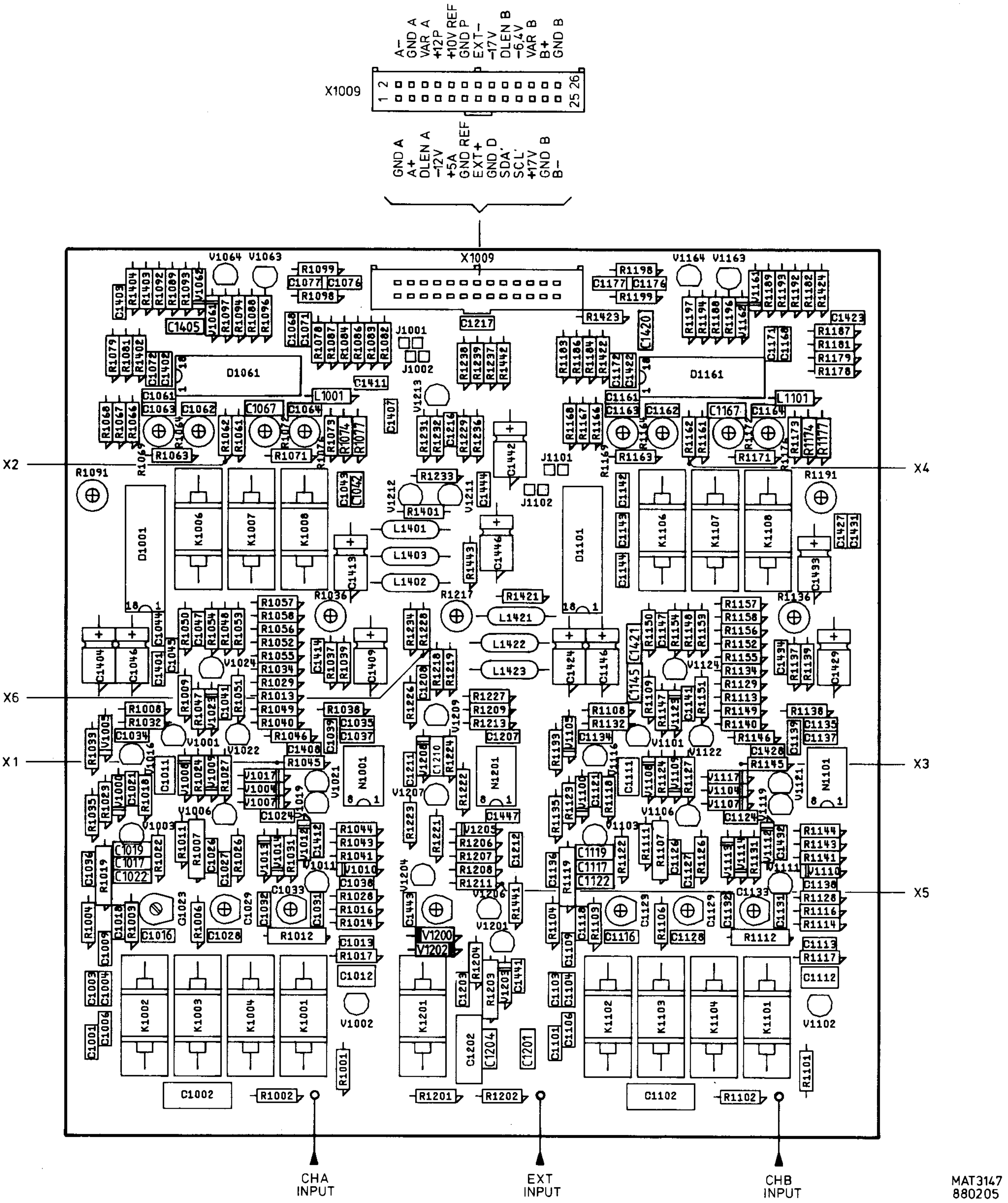
X1009
A−
GND A
VAR A
+12P
+10V REF
GND P
EXT−
−17V
DLEN B
−6.4V
VAR B
B+
GND B
1 2
25 26
GND A
A+
DLEN A
−12V
+5A
GND REF
EXT+
GND D
SDA'
SCL'
+17V
GND B
B−
X1
X2
X3
X4
X5
X6
D1001
D1101
D1061
D1161
N1001
N1101
N1201
K1001
K1002
K1003
K1004
K1006
K1007
K1008
K1101
K1102
K1103
K1104
K1106
K1107
K1108
K1201
CHA INPUT
EXT INPUT
CHB INPUT
MAT3147
880205

Figure 4.5 Attenuator unit p.c.b.

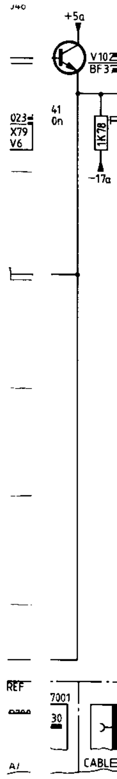

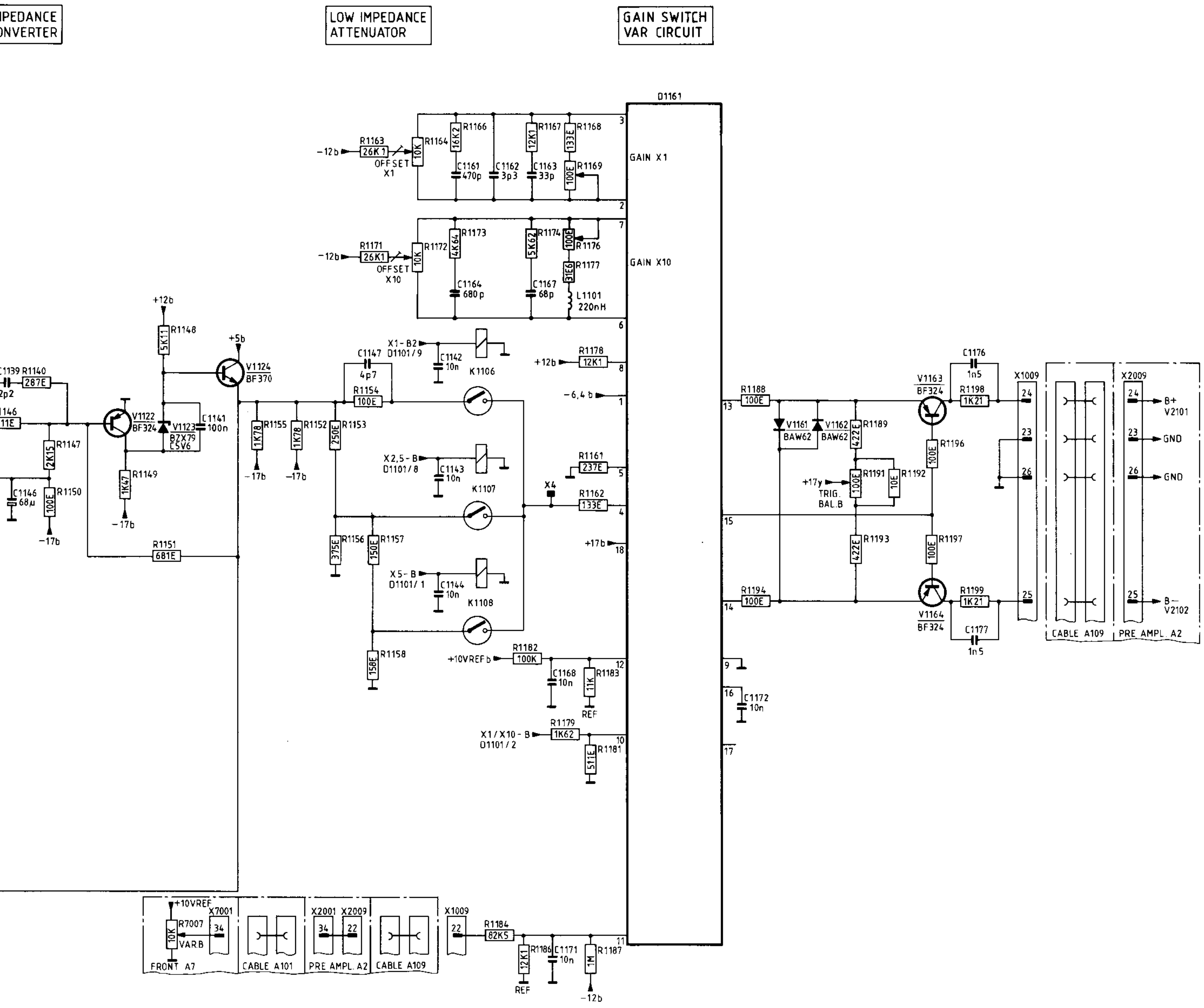

IPEDANCE
ONVERTER
LOW IMPEDANCE
ATTENUATOR
GAIN SWITCH
VAR CIRCUIT
D1161
GAIN X1
GAIN X10
-12b
R1163
26K1
OFFSET
X1
R1164
10K
R1166
16K2
C1161
470p
C1162
3p3
R1167
12K1
C1163
33p
R1168
133E
R1169
100E
R1171
26K1
OFFSET
X10
R1172
10K
R1173
4K64
C1164
680p
R1174
5K62
C1167
68p
100E
R1176
31E6
R1177
L1101
220nH
+12b
R1148
5K11
+5b
V1124
BF370
C1139
R1140
287E
2p2
146
11E
V1122
BF324
V1123
BZX79
C5V6
C1141
100n
R1147
2K15
C1146
68µ
R1150
100E
R1149
1K47
-17b
R1151
681E
X1-B2
D1101/9
C1147
4p7
C1142
10n
K1106
R1154
100E
R1155
1K78
R1152
1K78
R1153
250E
X2,5-B
D1101/8
C1143
10n
K1107
X4
R1156
375E
R1157
150E
X5-B
D1101/1
C1144
10n
K1108
R1158
158E
R1178
12K1
-6,4b
R1161
237E
R1162
133E
+17b
R1182
100K
+10VREFb
C1168
10n
R1183
11K
REF
X1/X10-B
D1101/2
R1179
1K62
R1181
511E
R1188
100E
V1161
BAW62
V1162
BAW62
R1189
422E
+17y
TRIG.
BAL.B
R1191
100E
R1192
10E
R1193
422E
R1194
100E
V1163
BF324
C1176
1n5
R1198
1K21
R1196
100E
R1197
100E
V1164
BF324
R1199
1K21
C1177
1n5
X1009
X2009
24
23
26
25
B+
V2101
GND
GND
B−
V2102
CABLE A109
PRE AMPL A2
C1172
10n
+10VREF
R7007
10K
VARB
X7001
34
FRONT A7
CABLE A101
X2001
X2009
34
22
PRE AMPL. A2
CABLE A109
X1009
22
R1184
82K5
R1186
12K1
C1171
10n
R1187
1M
REF
-12b

10 - B R1179

C - B K1101

-B K1102

3 K1103

K1104

B1 **R1118**

31 **R1108 / R1124**

1 **R1114 / R1128**

B R1132

2 K1106

B K1107

K1108

C EXT. **K1201**

REF. NO.	TYPE
D1101	TEA1017
D1161	0Q0203
N1101	µA714

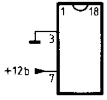

D1101
1
18
3
+12b
7

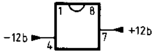

N1101
1
8
-12b
4
7
+12b

MAT 3170
880212

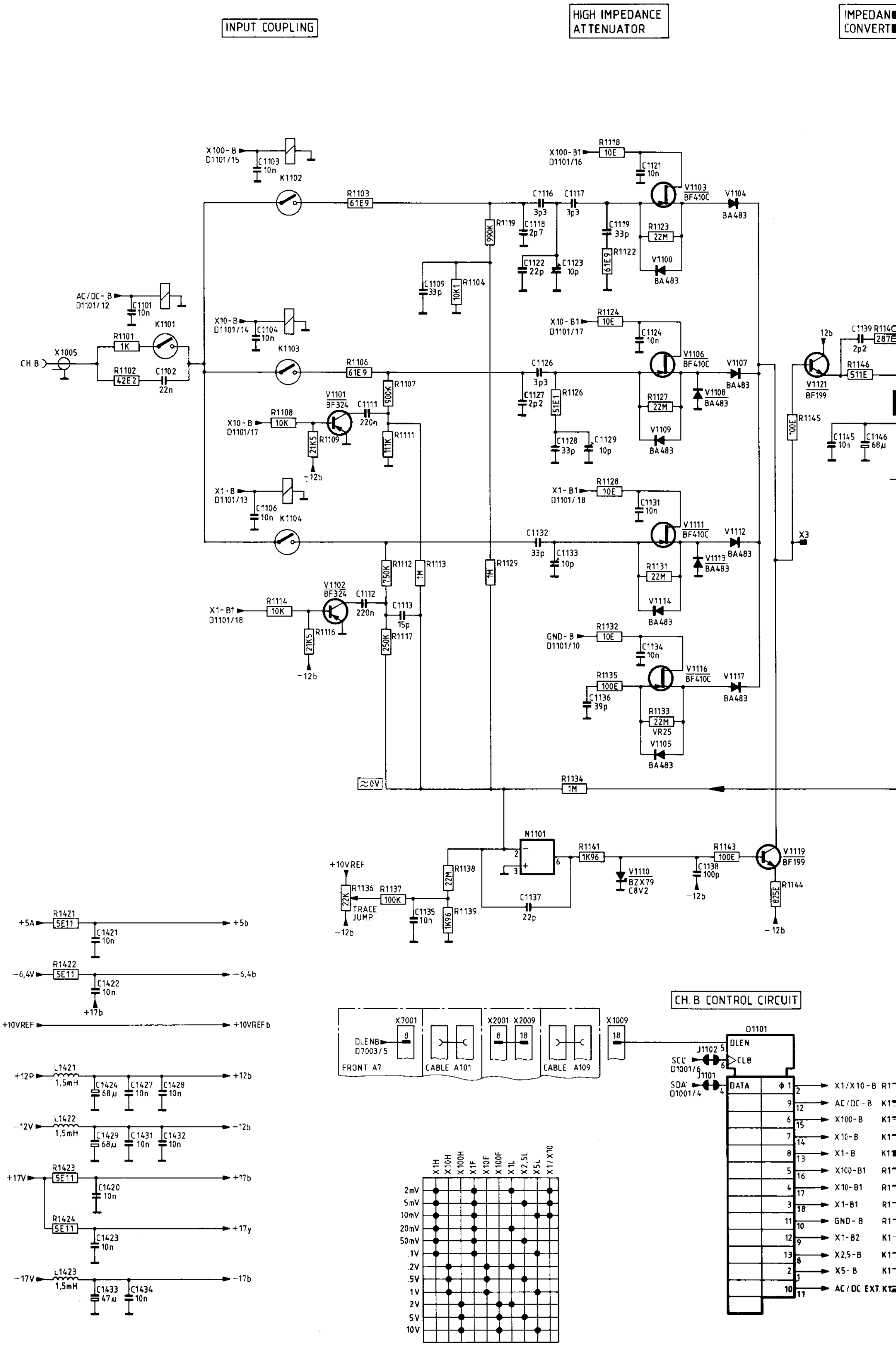
INPUT COUPLING
HIGH IMPEDANCE ATTENUATOR
IMPEDAN CONVERT
CH B
X1005
R1101 1K
R1102 42E2
C1102 22n
K1101
AC/DC-B D1101/12
C1101 10n
X100-B D1101/15
C1103 10n
K1102
R1103 61E9
X10-B D1101/14
C1104 10n
K1103
R1106 61E9
R1107 900K
V1101 BF324
C1111 220n
R1108 10K
X10-B D1101/17
R1109 21K5
R1111 11K
-12b
X1-B D1101/13
C1106 10n
K1104
R1112 750K
R1113 1M
V1102 BF324
C1112 220n
C1113 15p
R1114 10K
X1-B1 D1101/18
R1116 21K5
R1117 250K
-12b
R1119 990K
R1104 10K1
C1109 33p
C1116 3p3
C1117 3p3
C1118 2p7
C1122 22p
C1123 10p
C1119 33p
R1122 61E9
X100-B1 D1101/16
R1118 10E
C1121 10n
V1103 BF410C
V1104 BA483
R1123 22M
V1100 BA483
X10-B1 D1101/17
R1124 10E
C1124 10n
C1126 3p3
C1127 2p2
R1126 51E1
C1128 33p
C1129 10p
V1106 BF410C
V1107 BA483
V1108 BA483
R1127 22M
V1109 BA483
X1-B1 D1101/18
R1128 10E
C1131 10n
C1132 33p
C1133 10p
R1129 1M
V1111 BF410C
V1112 BA483
V1113 BA483
R1131 22M
V1114 BA483
GND-B D1101/10
R1132 10E
C1134 10n
R1135 100E
C1136 39p
V1116 BF410C
V1117 BA483
R1133 22M VR25
V1105 BA483
X3
12b
C1139 2p2
R1146 511E
V1121 BF199
R1145 100E
C1145 10n
C1146 68µ
≈0V
R1134 1M
N1101
R1141 1K96
V1110 BZX79 C8V2
R1143 100E
C1138 100p
-12b
V1119 BF199
R1144 825E
-12b
+10VREF
R1136 22K
TRACE JUMP
R1137 100K
C1135 10n
R1138 22M
R1139 1K96
C1137 22p
-12b
+5A R1421 5E11 C1421 10n +5b
-6,4V R1422 5E11 C1422 10n +17b -6,4b
+10VREF +10VREFb
+12P L1421 1,5mH C1424 68µ C1427 10n C1428 10n +12b
-12V L1422 1,5mH C1429 68µ C1431 10n C1432 10n -12b
+17V R1423 5E11 C1420 10n +17b
R1424 5E11 C1423 10n +17y
-17V L1423 1,5mH C1433 47µ C1434 10n -17b
X7001 DLENB D7003/5 FRONT A7
CABLE A101
X2001 X2009
CABLE A109
X1009
CH.B CONTROL CIRCUIT
D1101
DLEN
J1102
SCL D1001/6
CLB
J1101
SDA D1001/4
DATA
X1/X10-B
AC/DC-B
X100-B
X10-B
X1-B
X100-B1
X10-B1
X1-B1
GND-B
X1-B2
X2,5-B
X5-B
AC/DC EXT

	X1H	X10H	X100H	X1F	X10F	X100F	X1L	X2,5L	X5L	X1/X10
2mV	●			●			●			●
5mV	●			●				●		●
10mV	●			●					●	●
20mV	●			●			●			
50mV	●			●				●		
.1V	●			●					●	
.2V		●			●		●			
.5V		●			●			●		
1V		●			●				●	
2V			●			●	●			
5V			●			●		●		
10V			●			●			●	

Figure 4.4 Circuit diagram of attenuator, ch. B

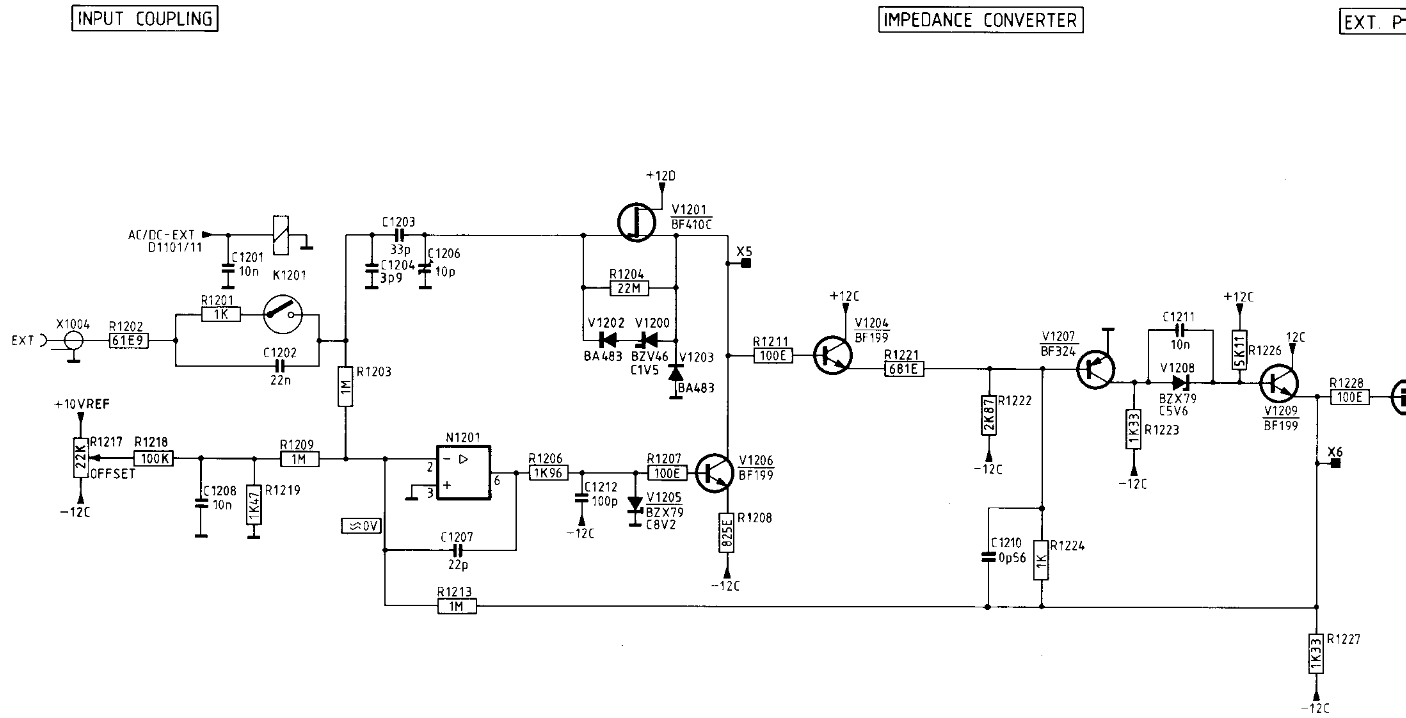
INPUT COUPLING
IMPEDANCE CONVERTER
EXT. P
AC/DC-EXT
D1101/11
C1201 10n
K1201
EXT
X1004
R1202 61E9
R1201 1K
C1202 22n
C1203 33p
C1204 3p9
C1206 10p
R1203 1M
+10VREF
R1217 22K
OFFSET
-12C
R1218 100K
C1208 10n
R1219 1K47
R1209 1M
N1201
≈0V
C1207 22p
R1213 1M
R1206 1K96
C1212 100p
-12C
R1207 100E
V1205 BZX79 C8V2
V1206 BF199
R1208 825E
-12C
+12D
V1201 BF410C
R1204 22M
V1202 BA483
V1200 BZV46 C1V5
V1203 BA483
X5
R1211 100E
+12C
V1204 BF199
R1221 681E
R1222 2K87
-12C
V1207 BF324
C1210 0p56
R1224 1K
R1223 1K33
-12C
C1211 10n
V1208 BZX79 C5V6
+12C
R1226 5K11
12C
V1209 BF199
R1228 100E
X6
R1227 1K33
-12C

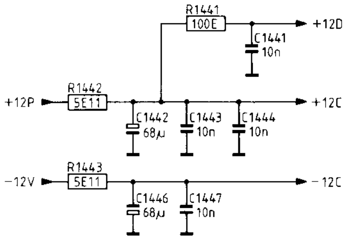
R1441 100E
+12D
C1441 10n
R1442 5E11
+12P
+12C
C1442 68µ
C1443 10n
C1444 10n
R1443 5E11
-12V
-12C
C1446 68µ
C1447 10n

REF NO	TYPE
N1201	LF356

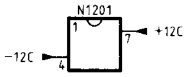
N1201
1
7
+12C
-12C
4

Figure 4.6 Circuit diagram of attenuator, EXT

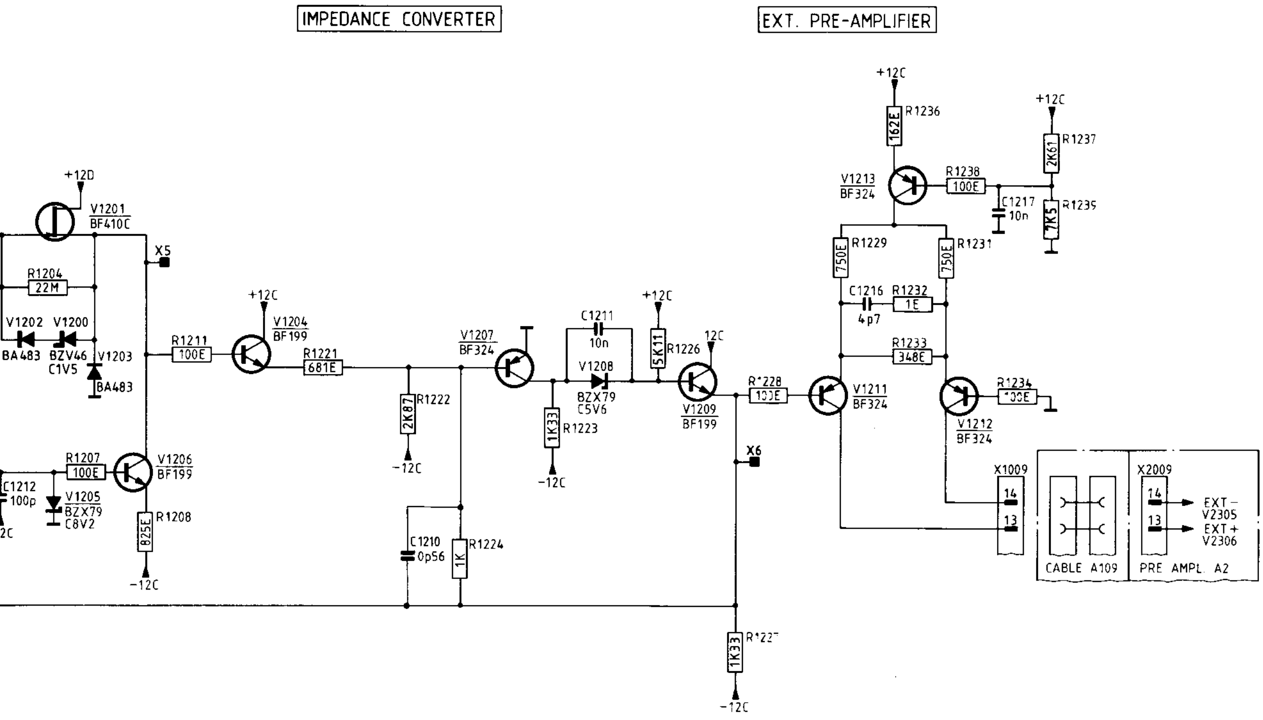
IMPEDANCE CONVERTER
EXT. PRE-AMPLIFIER
+12D
V1201
BF410C
X5
R1204
22M
V1202
V1200
BA483
BZV46
C1V5
V1203
BA483
R1211
100E
+12C
V1204
BF199
R1221
681E
R1222
2K87
-12C
V1207
BF324
C1211
10n
V1208
BZX79
C5V6
R1223
1K33
-12C
+12C
5K11
R1226
12C
V1209
BF199
X6
R1228
100E
V1211
BF324
+12C
R1236
162E
V1213
BF324
R1238
100E
+12C
R1237
2K61
C1217
10n
R1239
7K5
R1229
750E
R1231
750E
C1216
4p7
R1232
1E
R1233
348E
R1234
100E
V1212
BF324
X1009
14
13
CABLE A109
X2009
14
13
EXT-
V2305
EXT+
V2306
PRE AMPL A2
R1207
100E
V1206
BF199
C1212
100p
V1205
BZX79
C8V2
R1208
825E
-12C
C1210
0p56
R1224
1K
R1227
1K33
-12C

REF NO	TYPE
N1201	LF356

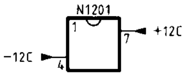
N1201
1
7
+12C
-12C
4

MAT3171
880212

EXT

5. PRE-AMPLIFIER UNIT (A2)

The pre-amplifier unit consists of:

- Vertical pre-amplifier
- MTB trigger pre-amplifier
- DTB trigger pre-amplifier
- Pre-amplifier control, incl. CHOPPER oscillator.

All control pulses for this unit are generated by the pre-amplifier control circuit, via the I^{2}C bus (see section 5.4).

5.1 VERTICAL PRE-AMPLIFIER

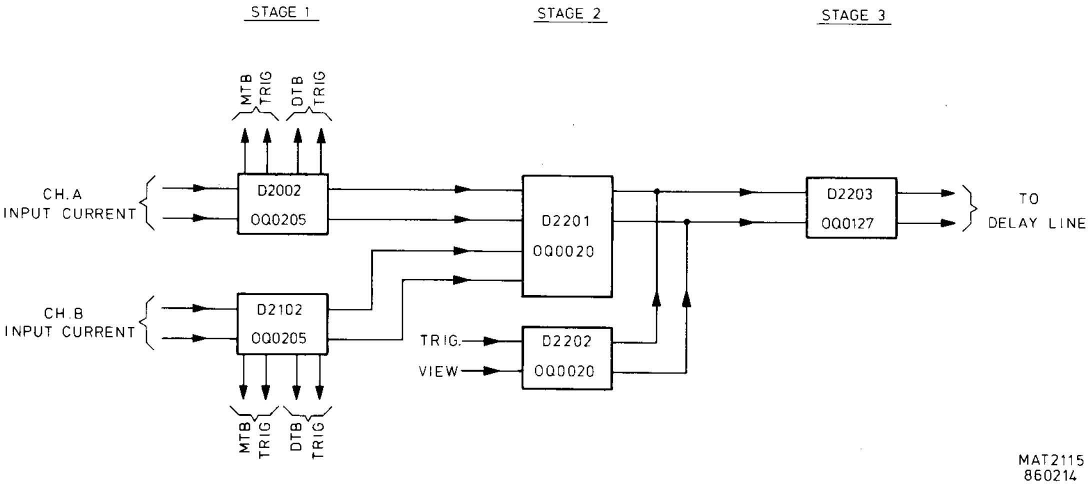
STAGE 1
STAGE 2
STAGE 3
MTB TRIG
DTB TRIG
CH.A INPUT CURRENT
D2002
OQ0205
D2201
OQ0020
D2203
OQ0127
TO DELAY LINE
CH.B INPUT CURRENT
D2102
OQ0205
TRIG.
VIEW
D2202
OQ0020
MTB TRIG
DTB TRIG
MAT2115
860214

Figure 5.1 The three stages of the vertical pre-amplifier

The vertical pre-amplifier consists of three stages.

The signal splitter (Q0205) receives its input signal for channel A (B) from the attenuator unit and copies this signal into three identical differential output current signals for:

- Vertical channel (pin 7 and 10)
- MTB triggering (pin 5 and 12), see section 5.2.
- DTB triggering (pin 4 and 13), see section 5.3.

Stage 2 (000020) consists of two integrated circuits D2201 and D2202, connected in parallel and serves as a vertical channel switch.
The switch selection is as follows:

	D2201		D2202
	pin 10	pin 11	pin 10
A	1	0	0
B	0	1	0
TRIG VIEW	0	0	1
ADD	1	1	0

Further, all possible 2, 3, or 4 channel combinations are possible in alternated or chopped display (see also section 5.4).

This stage comprises the following functions:

- Position control POS A R7006 on D2201-1 for ch. A and POS B R7008 on D2201-8 for ch. B.
- Channel B normal/invert (high is INVERT) on D2201-7.
  (The balance between normal/invert can be adjusted with R2212).
- Trigger view invert (high is INVERT) on D2202-2.
- Trace separation control with R7013 on D2202-8.

Stage 3 (D2203) serves as delay line driver where the output current of both OQ0020 is converted into voltage signal applied to the delay line. The current for this stage and for D2201 and D2202 is fed via R2231 and R2246.
The current regulation for the common-mode circuit is achieved by transistor D2203 (12, 13, 14).

5.2 MTB TRIGGER PRE-AMPLIFIER

Trigger possibilities are:

	Signal		Selected by:		inverted by:	
	name	routed to	name	routed to	name	routed to
ch. A	TRAM+, TRAM-	D2302(3,4)	AM	D2302(10)	INVAM	D2302(2)
ch. B	TRBM+, TRBM-	D2302(5,6)	BM	D2302(11)	INVBM	D2302(7)
EXTERNAL	EXT-, EXT+	D2303(3,4)	EXTM	D2303(10)	INVAM	D2303(2)
line	LINE	D2303(5)	LNM	D2303(11)	INVAM	D2303(7)

D2301 serves as a signal splitter and receives its input signal from the attenuator unit. This input current signal is copied into two identical differential output current signals for:

- EXT MTB signal (pin 6 and 11)
- EXT DTB signal (pin 7 and 10), (see Section 5.3).

The symmetrical output currents from D2302 (13, 14) and D2303 (13, 14) are converted into a symmetrical voltage again in the common-base circuit V2316, V2319 followed by a shunt feedback circuit V2318 and V2321. Note that the sensitivity at the collectors of V2318 and V2321 is 110 mV/DIV.

At this point the signal path is divided into:

- a trigger path, fed to both V2333 and V2334, where depending on the current to the base, levelling of the trigger signal is obtained.
  Two separate series feedback circuits take care of voltage-to-current conversion:
  - * V2341 and V2342 for main time-base triggering.
    The trigger output signal, TRIGM- and TRIGM+ are fed to the time-base unit A4.
  - * V2347 and V2349 for trigger view.
    This symmetrical output can be balanced by potentiometer R2407 (Trig view BAL).
    The TRIGV+ and TRIGV- signals are fed to D2202 (3-4).

Integrated circuit D2304 serves as an auto level circuit.
The following functions are possible.

a. Peak-peak

In this case the amplitude of the trigger signal applied to D2304 (3,7) is measured by peak-peak detectors on D2304 (2,4,6,8). The output current from D2304 (14,15) is dependent on the peak-peak level and is adjustable with the LEVEL control R7012, connected to D2304(1).

b. Triggering

In this case the level range is 16 div. The level is adjustable with R7012 and the current variation on D2304 (14,15) can be varied between +or- 0,6mA.

c. TV triggering

The level control is made ineffective. In TV triggering, the LEVEL must be set to a fixed value. This is done by applying a high level current to pin 1 via diode V2326.

d. Auto

In auto the signal LEVEL ZERO is high and via diode V2325 the output level D2304 (15) is asymmetrical with output level D2304 (14). Thus the maximum signal amplitude is 2 Vp-p.

- an external deflection path, routed via the series feedback circuit V2356 and V2357, the X DEFL+ and X DEFL- signals are fed to the time base unit A2.
  R2416, R2422 and C2350 gives phase correction for the X-Y display.

5.3 DTB TRIGGER PRE-AMPLIFIER

Trigger possibilities are:

	Signal		Selected by:		Inverted by:	
	name	routed to	name	routed to	name	routed to
ch.A	TRAD+, TRAD-	D2501(3,4)	AD	D2501(10)	INVAD	D2501(2)
ch.B	TRBD+, TRBD-	D2501(5,6)	BD	D2501(11)	INVBD	D2501(7)
EXTERNAL	EXT+, EXT-	D2502(5,6)	EXTD	D2502(11)	INVAD	D2502(7)

Similar to the main time base triggering, signal splitter D2301 applies the EXT current to the OQ0020.

The LEVEL control R7014 is connected to D2502-1 to obtain a level range of 16 div.

The output of both integrated circuits, pin 13 and 14, are routed via a shunt feedback V2512, V2513, followed by a series feedback circuit V2514, V2516 and provide the DTB trigger signals TRIGD- and TRIGD+. These signals are fed to the time-base unit A4.

5.4 PRE-AMPLIFIER CONTROL

The pre-amplifier control converts the data from the 1^2C bus (SDA and SCL), derived from the microcomputer, into the control pulses for the pre-amplifier unit. To eliminate interference the SDA and SCL lines can be switched off via D2601.

This integrated circuit serves as a digital switch, controlled by the VERT IIC line. Logic high connects the outputs D2601(4,14,15) to the input "1" contact (switched on); logic low connects the outputs to the "2" contact (switched off) and gives SDA a logic low level and SCL a logic high level.

When D2601 is switched on, the serial data information is converted into parallel control pulses via D2602 and D2603, provided that D2602 is enabled (D2602-5 is high). The control lines are active when the level of the line is high.

Output Q12-D2602(9) serves as a power up not line for D2603: when the oscilloscope is in the power-up routine, Q12 is high and resets D2603. After the power-up routine, Q12 goes low and enables D2603.

Integrated circuit D2603 relieves the microcomputer of a number of such functions as:

- trigger view
- chop/alt
- trace separation
- trigger select
- time-base select (fed to time base unit A4)

Adaptation of this I.C. to the oscilloscope version is made by the AD0 and AD1 inputs D2603(15,16).
For this oscilloscope, AD0 must be HIGH and AD1 must be LOW.

Timing for alternate and chopped mode is derived by the ALTCLN and CHOPCL pulses.

The chopper oscillator formed by V2611 and V2612 supplies a square wave voltage of 1,5 Vp-p with a frequency of 1 MHz.

This frequency is defined by two current loops:

- I1 is determined by: V2612(c-e), C2611, R2627 and R2625.
- I2 is determined by: V2611(c-e), C2611, R2628 and R2625.

The duty cycle (I1/I1+I2) is 12% approx.

The square wave on the collector of V2612 serves as a chopper clock pulse for D2603 and gives a 500 kHz display for 2 channels CHOP, 333 kHz display for 3 channels CHOP and 250 kHz for 4 channels CHOP (A-B-TRIG VIEW-ADD).

Note that D2603(8) serves as the chopper switch, which is high when the CHOP softkey is depressed.

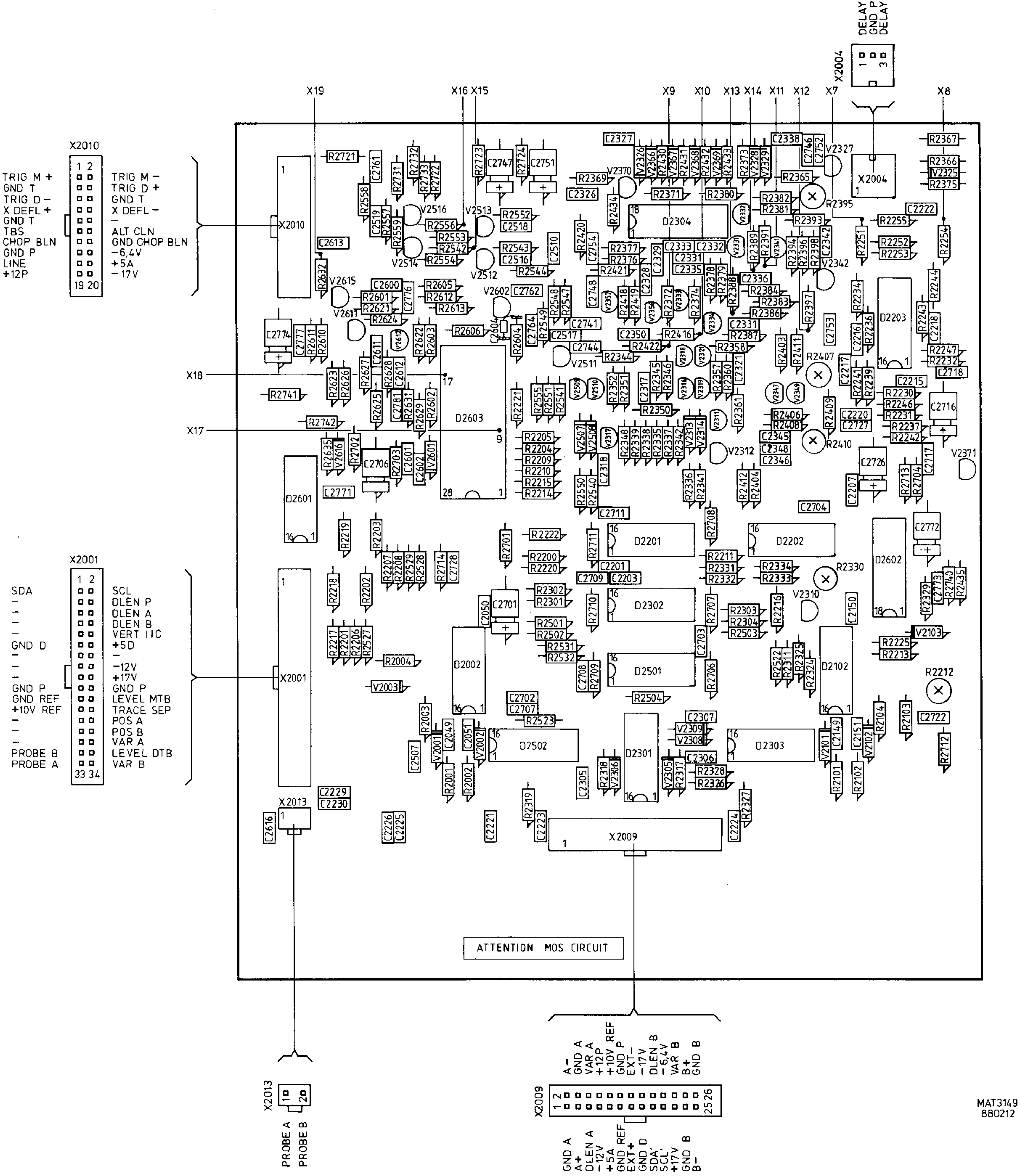
X2010
TRIG M +
GND T
TRIG D −
X DEFL +
GND T
TBS
CHOP BLN
GND P
LINE
+12P
TRIG M −
TRIG D +
GND T
X DEFL −
ALT CLN
GND CHOP BLN
−6,4V
+5A
−17V
X2001
SDA
GND D
GND P
GND REF
+10V REF
PROBE B
PROBE A
SCL
DLEN P
DLEN A
DLEN B
VERT IIC
+5D
−12V
+17V
GND P
LEVEL MTB
TRACE SEP
POS A
POS B
VAR A
LEVEL DTB
VAR B
X2004
DELAY−
GND P
DELAY+
X19
X16
X15
X9
X10
X13
X14
X11
X12
X7
X8
X18
X17
D2304
D2603
D2601
D2203
D2201
D2202
D2602
D2302
D2501
D2002
D2102
D2502
D2301
D2303
X2013
X2009
ATTENTION MOS CIRCUIT
A−
GND A
VAR A
+12P
+10V REF
GND P
EXT−
−17V
DLEN B
−6,4V
VAR B
B+
GND B
GND A
A+
DLEN A
−12V
+5A
GND REF
EXT+
GND D
SDA
SCL
+17V
GND B
B−
MAT3149
880212

Figure 5.2 Pre-amplifier unit p.c.b.

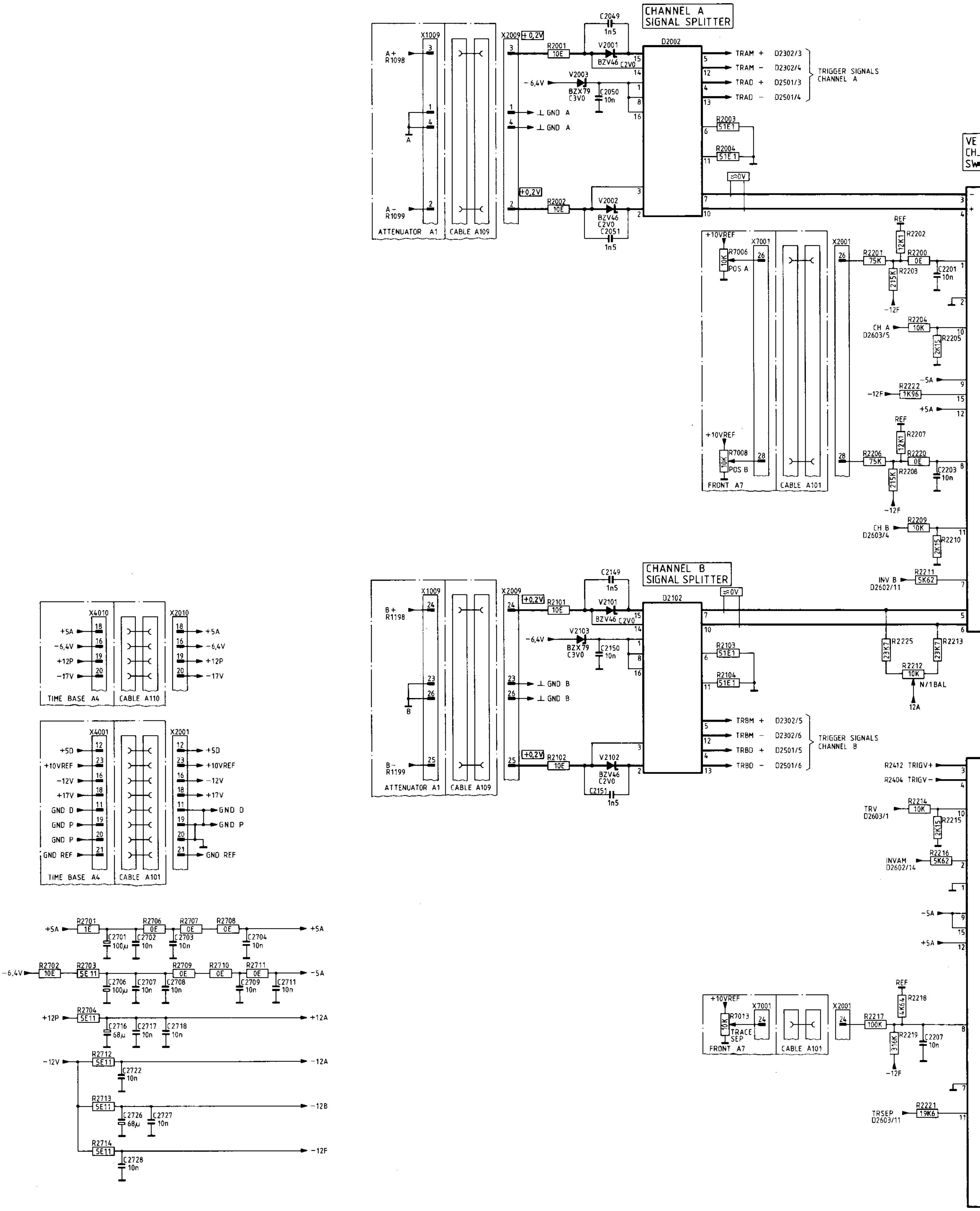
CHANNEL A SIGNAL SPLITTER
CHANNEL B SIGNAL SPLITTER
D2002
D2102
ATTENUATOR A1
CABLE A109
CABLE A101
CABLE A110
FRONT A7
TIME BASE A4
X1009
X2009
X7001
X2001
X4010
X2010
X4001
A+ R1098
A- R1099
B+ R1198
B- R1199
GND A
GND B
+0,2V
-6,4V
V2001 BZV46 C2V0
V2002 BZV46 C2V0
V2003 BZX79 C3V0
V2101 BZV46 C2V0
V2102 BZV46 C2V0
V2103 BZX79 C3V0
C2049 1n5
C2051 1n5
C2050 10n
C2149 1n5
C2151 1n5
C2150 10n
R2001 10E
R2002 10E
R2101 10E
R2102 10E
R2003 51E1
R2004 51E1
R2103 51E1
R2104 51E1
≈0V
TRAM + D2302/3
TRAM - D2302/4
TRAD + D2501/3
TRAD - D2501/4
TRIGGER SIGNALS CHANNEL A
TRBM + D2302/5
TRBM - D2302/6
TRBD + D2501/5
TRBD - D2501/6
TRIGGER SIGNALS CHANNEL B
+10VREF
R7006 10K POS A
R7008 10K POS B
R7013 10K TRACE SEP
REF
R2202 12K1
R2201 75K
R2200 0E
R2203 215K
C2201 10n
-12F
CH A D2603/5
R2204 10K
R2205 2K15
-5A
R2222 1K96
+5A
R2207 12K1
R2206 75K
R2220 0E
R2208 215K
C2203 10n
CH B D2603/4
R2209 10K
R2210 2K15
INV B D2602/11
R2211 5K62
R2225 23K7
R2213 23K7
R2212 10K
N/1BAL
12A
R2412 TRIGV+
R2404 TRIGV-
TRV D2603/1
R2214 10K
R2215 2K15
INVAM D2602/14
R2216 5K62
R2218 4K64
R2217 100K
R2219 316K
C2207 10n
TRSEP D2603/11
R2221 19K6
VE CH SW
+5A
-6,4V
+12P
-17V
+5D
+10VREF
-12V
+17V
GND D
GND P
GND REF
R2701 1E
R2706 0E
R2707 0E
R2708 0E
C2701 100μ
C2702 10n
C2703 10n
C2704 10n
R2702 10E
R2703 5E11
R2709 0E
R2710 0E
R2711 0E
C2706 100μ
C2707 10n
C2708 10n
C2709 10n
C2711 10n
-5A
R2704 5E11
C2716 68μ
C2717 10n
C2718 10n
+12A
R2712 5E11
C2722 10n
-12A
R2713 5E11
C2726 68μ
C2727 10n
-12B
R2714 5E11
C2728 10n
-12F

Figure 5.3 Circuit diagram of pre-amplifier, channel switch + delay line driver

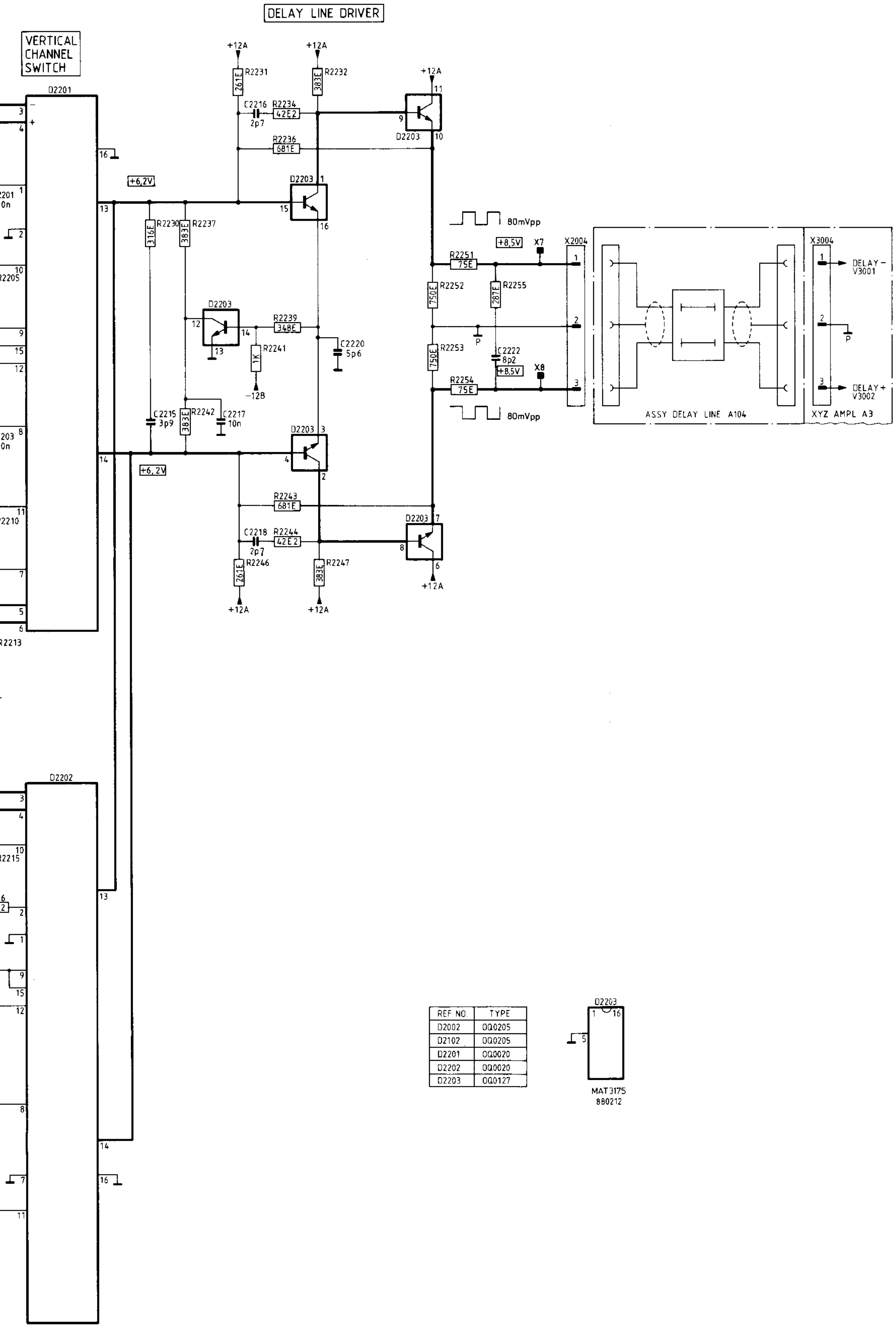
DELAY LINE DRIVER
VERTICAL CHANNEL SWITCH
D2201
D2202
D2203
+12A
R2231
261E
R2232
383E
C2216
2p7
R2234
42E2
R2236
681E
+6,2V
R2230
316E
R2237
383E
R2239
348E
R2241
1K
-12B
C2220
5p6
C2215
3p9
R2242
383E
C2217
10n
R2243
681E
C2218
2p7
R2244
42E2
R2246
261E
R2247
383E
80mVpp
+8,5V
X7
X8
X2004
R2251
75E
R2252
750E
R2253
750E
R2255
287E
C2222
8p2
R2254
75E
P
ASSY DELAY LINE A104
X3004
DELAY -
V3001
DELAY +
V3002
XYZ AMPL A3

REF NO.	TYPE
D2002	0Q0205
D2102	0Q0205
D2201	0Q0020
D2202	0Q0020
D2203	0Q0127

D2203
1
16
5

MAT 3175
880212

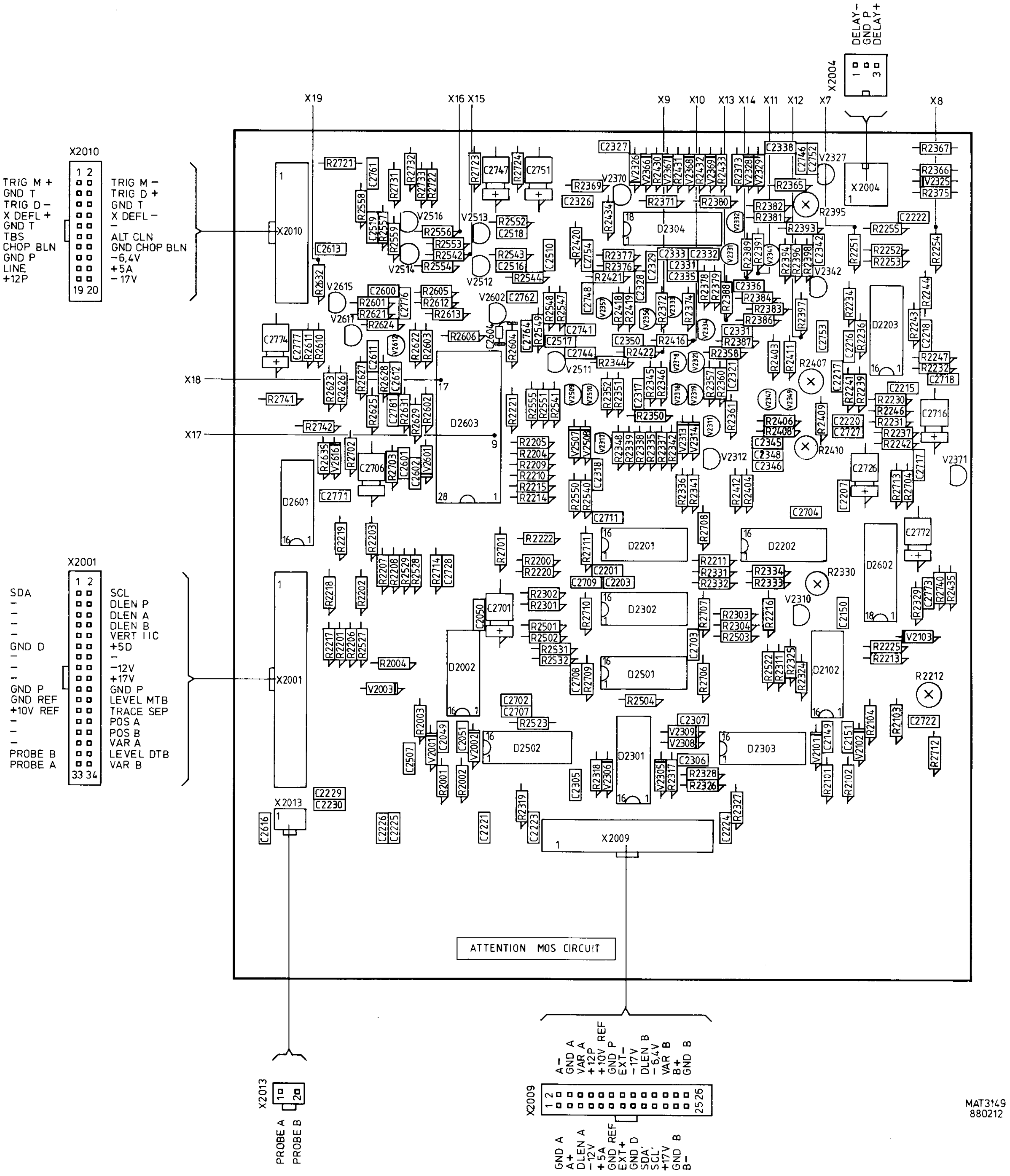
DELAY-
GND P
DELAY+
X2004
X19
X16 X15
X9 X10 X13 X14 X11 X12 X7
X8
X2010
1 2
TRIG M +
GND T
TRIG D −
X DEFL +
GND T
TBS
CHOP BLN
GND P
LINE
+12P
TRIG M −
TRIG D +
GND T
X DEFL −
−
ALT CLN
GND CHOP BLN
−6,4V
+5A
−17V
19 20
X18
X17
D2603
D2601
D2304
D2203
D2201
D2202
D2302
D2501
D2002
D2502
D2301
D2303
D2102
D2602
X2001
1 2
SDA
−
−
−
GND D
−
−
GND P
GND REF
+10V REF
−
−
PROBE B
PROBE A
SCL
DLEN P
DLEN A
DLEN B
VERT IIC
+5D
−
−12V
+17V
GND P
LEVEL MTB
TRACE SEP
POS A
POS B
VAR A
LEVEL DTB
VAR B
33 34
X2013
X2009
ATTENTION MOS CIRCUIT
PROBE A
PROBE B
A−
GND A
VAR A
+12P
+10V REF
GND P
EXT−
−17V
DLEN B
−6,4V
VAR B
B+
GND B
GND A
A+
DLEN A
−12V
+5A
GND REF
EXT+
GND D
SDA
SCL
+17V
GND B
B−
1 2
25 26
MAT3149
880212

Figure 5.5 Pre-amplifier unit p.c.b.

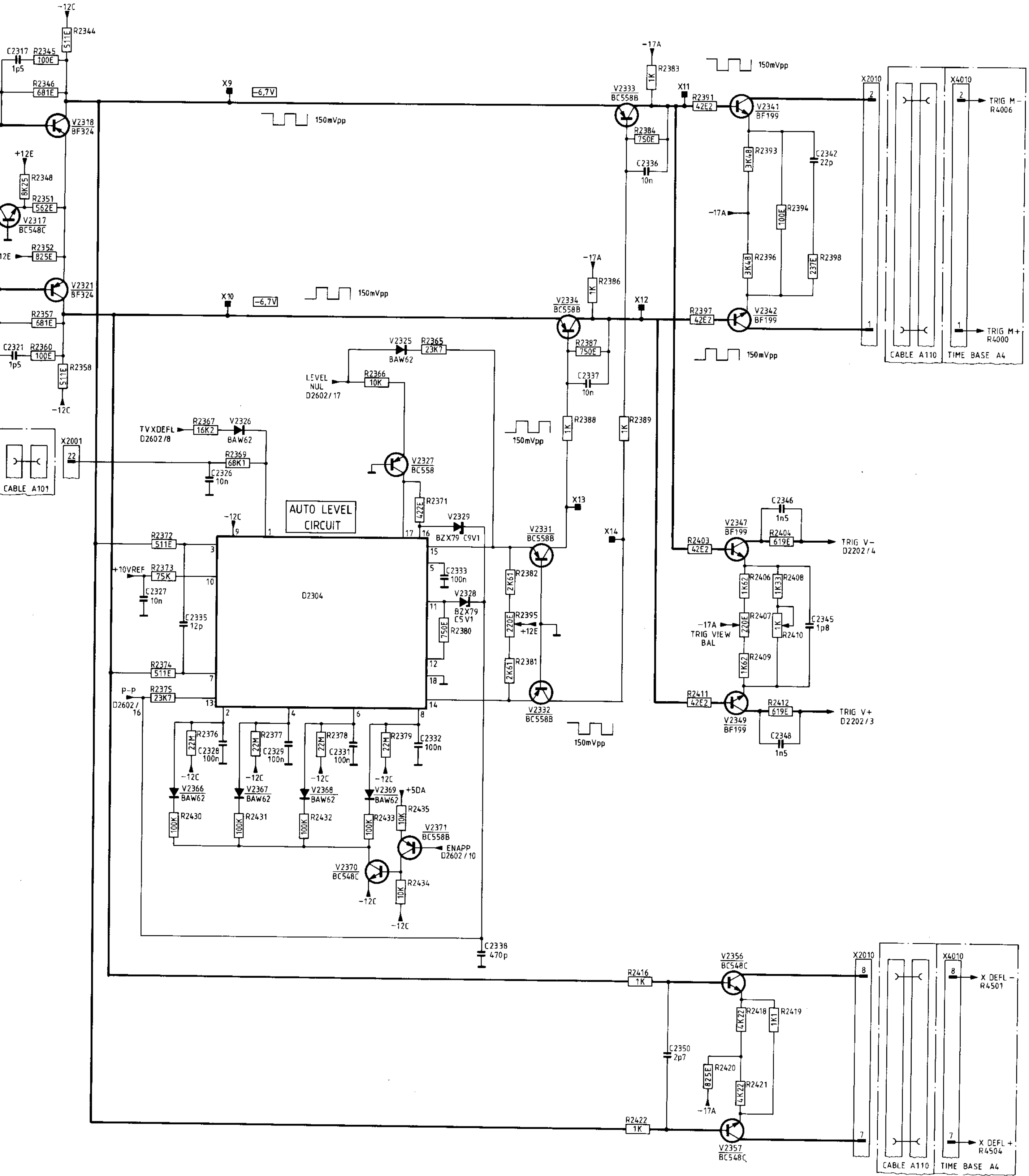
-12C
R2344
511E
C2317
1p5
R2345
100E
R2346
681E
V2318
BF324
X9
-6,7V
150mVpp
+12E
R2348
8K25
R2351
562E
V2317
BC548C
12E
R2352
825E
V2321
BF324
X10
-6,7V
150mVpp
R2357
681E
C2321
1p5
R2360
100E
R2358
511E
-12C
CABLE A101
X2001
22
TVXDEFL
D2602/8
R2367
16K2
V2326
BAW62
R2369
68K1
C2326
10n
LEVEL
NUL
D2602/17
R2366
10K
V2325
BAW62
R2365
23K7
V2327
BC558
R2371
422E
AUTO LEVEL
CIRCUIT
-12C
9
1
17
16
V2329
BZX79 C9V1
15
5
C2333
100n
V2328
BZX79
C5V1
11
750E
R2380
12
18
14
D2304
R2372
511E
3
+10VREF
R2373
75K
10
C2327
10n
C2335
12p
R2374
511E
7
P-P
D2602/
16
R2375
23K7
13
2
4
6
8
R2376
22M
C2328
100n
-12C
V2366
BAW62
R2430
100K
R2377
22M
C2329
100n
-12C
V2367
BAW62
R2431
100K
R2378
22M
C2331
100n
-12C
V2368
BAW62
R2432
100K
R2379
22M
C2332
100n
-12C
V2369
BAW62
+5DA
R2435
10K
R2433
100K
V2371
BC558B
ENAPP
D2602/10
V2370
BC548C
-12C
R2434
10K
-12C
C2338
470p
-17A
R2383
1K
150mVpp
V2333
BC558B
X11
R2391
42E2
V2341
BF199
R2384
750E
C2336
10n
R2393
3K48
C2342
22p
-17A
R2394
100E
R2396
3K48
R2398
237E
-17A
R2386
1K
V2334
BC558B
X12
R2397
42E2
V2342
BF199
R2387
750E
C2337
10n
150mVpp
R2388
1K
R2389
1K
150mVpp
X13
X14
V2331
BC558B
R2382
2K61
R2395
220E
+12E
R2381
2K61
V2332
BC558B
150mVpp
X2010
2
1
X4010
2
TRIG M -
R4006
1
TRIG M+
R4000
CABLE A110
TIME BASE A4
C2346
1n5
V2347
BF199
R2404
619E
TRIG V-
D2202/4
R2403
42E2
R2406
1K62
R2408
1K33
-17A
TRIG VIEW
BAL
R2407
220E
R2410
1K
C2345
1p8
R2409
1K62
R2411
42E2
V2349
BF199
R2412
619E
TRIG V+
D2202/3
C2348
1n5
R2416
1K
V2356
BC548C
X2010
8
X4010
8
X DEFL -
R4501
R2418
4K22
R2419
1K1
C2350
2p7
R2420
825E
-17A
R2421
4K22
R2422
1K
V2357
BC548C
7
7
X DEFL +
R4504
CABLE A110
TIME BASE A4

MAT3176
880212

REF NO.	TYPE
D2301	0Q0205
D2302	0Q0020
D2303	0Q0020
D2304	0Q0128

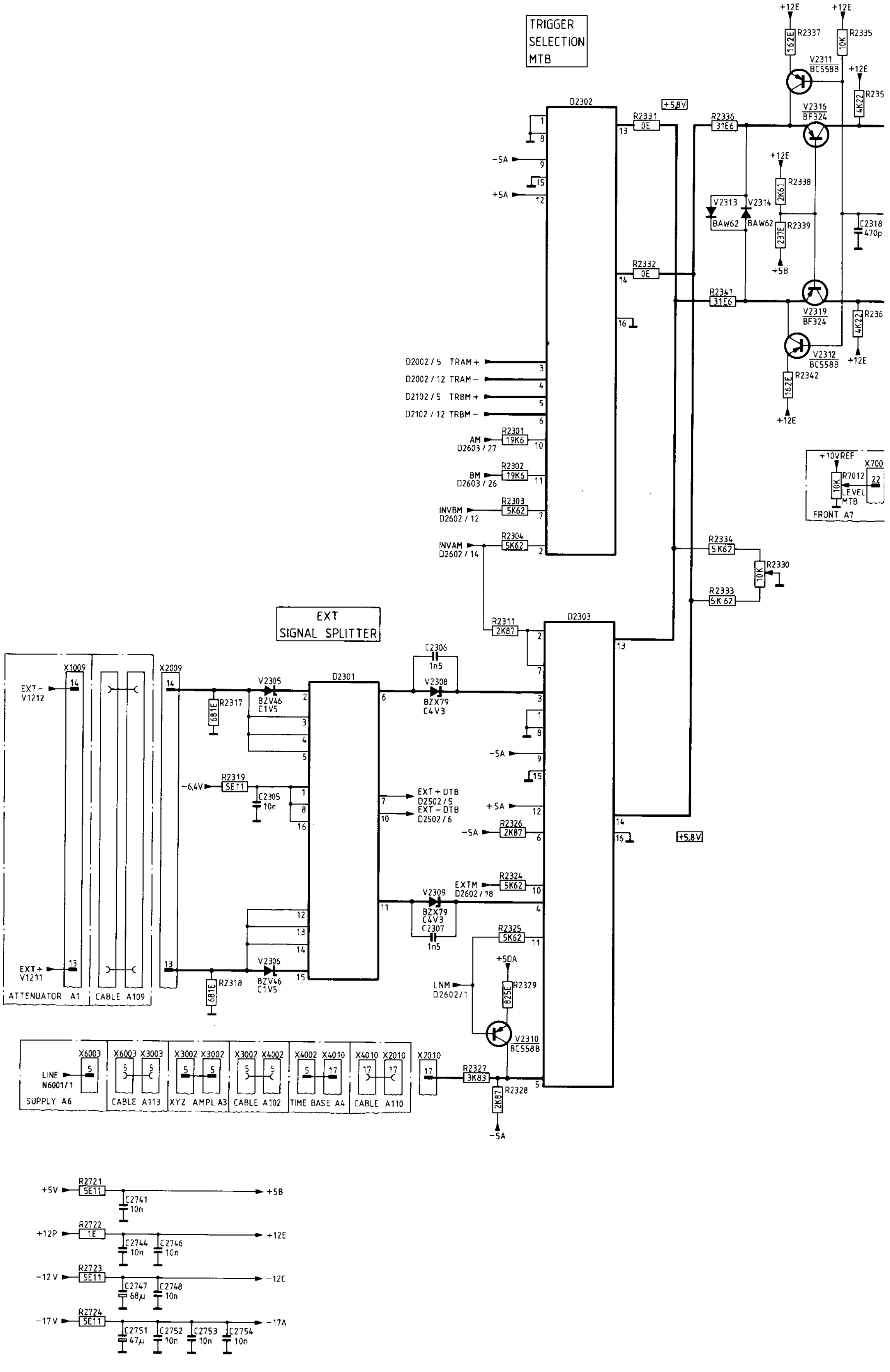
TRIGGER SELECTION MTB
EXT SIGNAL SPLITTER
D2302
D2303
D2301
+12E
R2337
162E
R2335
10K
V2311
BC558B
R235
4K22
V2316
BF324
R2336
31E6
R2331
0E
+5,8V
R2338
2K61
R2339
237E
+5B
V2313
BAW62
V2314
BAW62
C2318
470p
R2332
0E
R2341
31E6
V2319
BF324
R236
V2312
BC558B
R2342
-5A
+5A
D2002 / 5 TRAM+
D2002 / 12 TRAM-
D2102 / 5 TRBM+
D2102 / 12 TRBM-
AM
D2603 / 27
R2301
19K6
BM
D2603 / 26
R2302
19K6
INVBM
D2602 / 12
R2303
5K62
INVAM
D2602 / 14
R2304
5K62
+10VREF
X700
R7012
10K
LEVEL MTB
FRONT A7
R2334
5K62
R2330
10K
R2333
5K 62
R2311
2K87
C2306
1n5
V2308
BZX79
C4V3
X1009
X2009
EXT-
V1212
EXT+
V1211
ATTENUATOR A1
CABLE A109
R2317
681E
V2305
BZV46
C1V5
-6,4V
R2319
5E11
C2305
10n
EXT+DTB
D2502 / 5
EXT-DTB
D2502 / 6
R2326
2K87
EXTM
D2602 / 18
R2324
5K62
V2309
BZX79
C4V3
C2307
1n5
R2325
5K62
+5DA
R2329
825E
LNM
D2602/1
V2310
BC558B
V2306
BZV46
C1V5
R2318
681E
X6003
X3003
X3002
X4002
X4010
X2010
LINE
N6001/1
SUPPLY A6
CABLE A113
XYZ AMPL A3
CABLE A102
TIME BASE A4
CABLE A110
R2327
3K83
R2328
2K87
+5V
R2721
5E11
C2741
10n
+5B
+12P
R2722
1E
C2744
10n
C2746
10n
+12E
-12V
R2723
5E11
C2747
68μ
C2748
10n
-12C
-17V
R2724
5E11
C2751
47μ
C2752
10n
C2753
10n
C2754
10n
-17A

Figure 5.4 Circuit diagram of pre-amplifier, MTB trigger switch

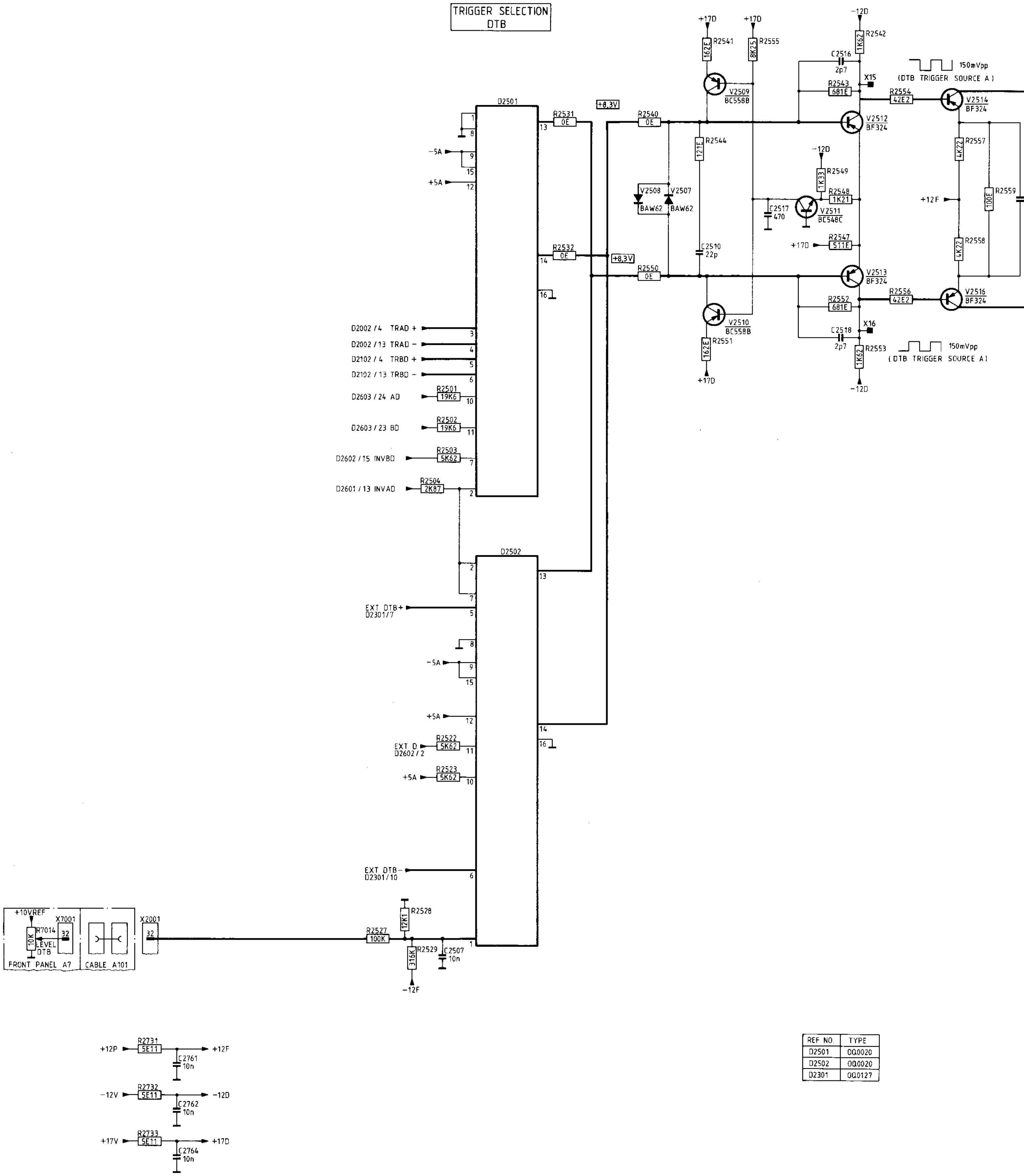
TRIGGER SELECTION
DTB
D2501
D2502
R2531 0E
R2532 0E
+8,3V
R2540 0E
R2550 0E
V2508 BAW62
V2507 BAW62
+17D
R2541 162E
R2555 8K25
V2509 BC558B
R2544 121E
C2510 22p
V2510 BC558B
R2551 162E
-12D
R2542 1K62
C2516 2p7
R2543 681E
X15
V2512 BF324
R2549 1K33
R2548 1K21
C2517 470
V2511 BC548C
R2547 511E
V2513 BF324
R2552 681E
C2518 2p7
X16
R2553 1K62
150mVpp
(DTB TRIGGER SOURCE A)
R2554 42E2
V2514 BF324
R2557 4K22
R2559 100E
+12F
R2558 4K22
R2556 42E2
V2516 BF324
-5A
+5A
D2002 / 4 TRAD +
D2002 / 13 TRAD -
D2102 / 4 TRBD +
D2102 / 13 TRBD -
D2603 / 24 AD
R2501 19K6
D2603 / 23 BD
R2502 19K6
D2602 / 15 INVBD
R2503 5K62
D2601 / 13 INVAD
R2504 2K87
EXT DTB+ D2301/7
EXT D D2602/2
R2522 5K62
R2523 5K62
EXT DTB- D2301/10
+10VREF
X7001
R7014 10K
LEVEL DTB
32
FRONT PANEL A7
CABLE A101
X2001
R2527 100K
R2528 12K1
R2529 316K
C2507 10n
-12F
+12P
R2731 5E11
C2761 10n
-12V
R2732 5E11
C2762 10n
+17V
R2733 5E11
C2764 10n

REF NO.	TYPE
D2501	0Q0020
D2502	0Q0020
D2301	0Q0127

Figure 5.6 Circuit diagram of pre-amplifier, DTB trigger switch

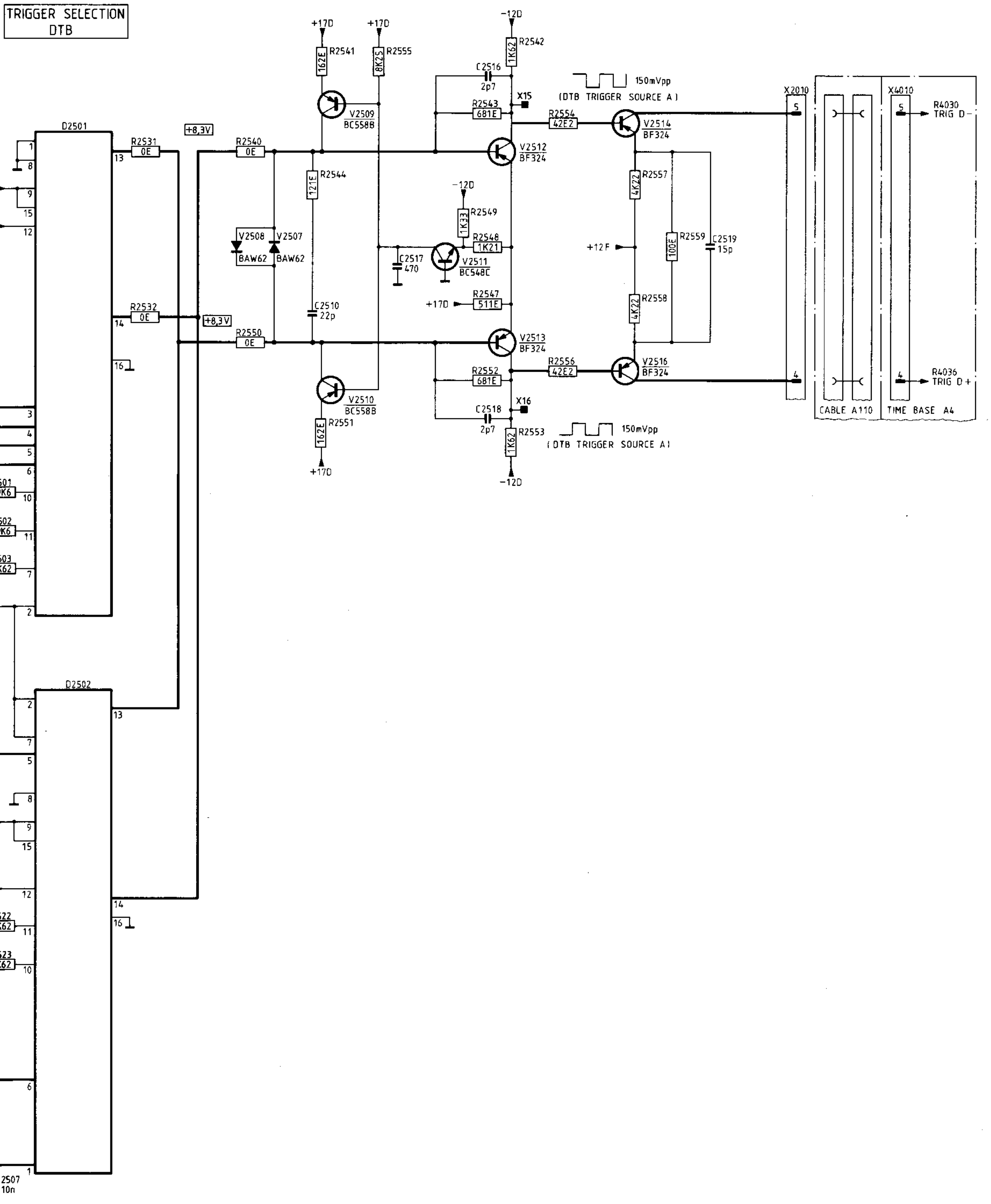
TRIGGER SELECTION
DTB
D2501
D2502
R2531 0E
R2532 0E
+8,3V
R2540 0E
R2550 0E
+17D
R2541 162E
R2555 8K25
V2509 BC558B
R2544 121E
V2508 BAW62
V2507 BAW62
C2510 22p
V2510 BC558B
R2551 162E
-12D
R2542 1K62
C2516 2p7
R2543 681E
X15
V2512 BF324
R2549 1K33
R2548 1K21
C2517 470
V2511 BC548C
R2547 511E
V2513 BF324
R2552 681E
C2518 2p7
X16
R2553 1K62
150mVpp
(DTB TRIGGER SOURCE A)
R2554 42E2
R2556 42E2
V2514 BF324
V2516 BF324
R2557 4K22
R2558 4K22
+12F
R2559 100E
C2519 15p
X2010
X4010
R4030 TRIG D-
R4036 TRIG D+
CABLE A110
TIME BASE A4
2507
10n

REF NO.	TYPE
D2501	OQ0020
D2502	OQ0020
D2301	OQ0127

MAT3177
880212

er, DTB trigger switch

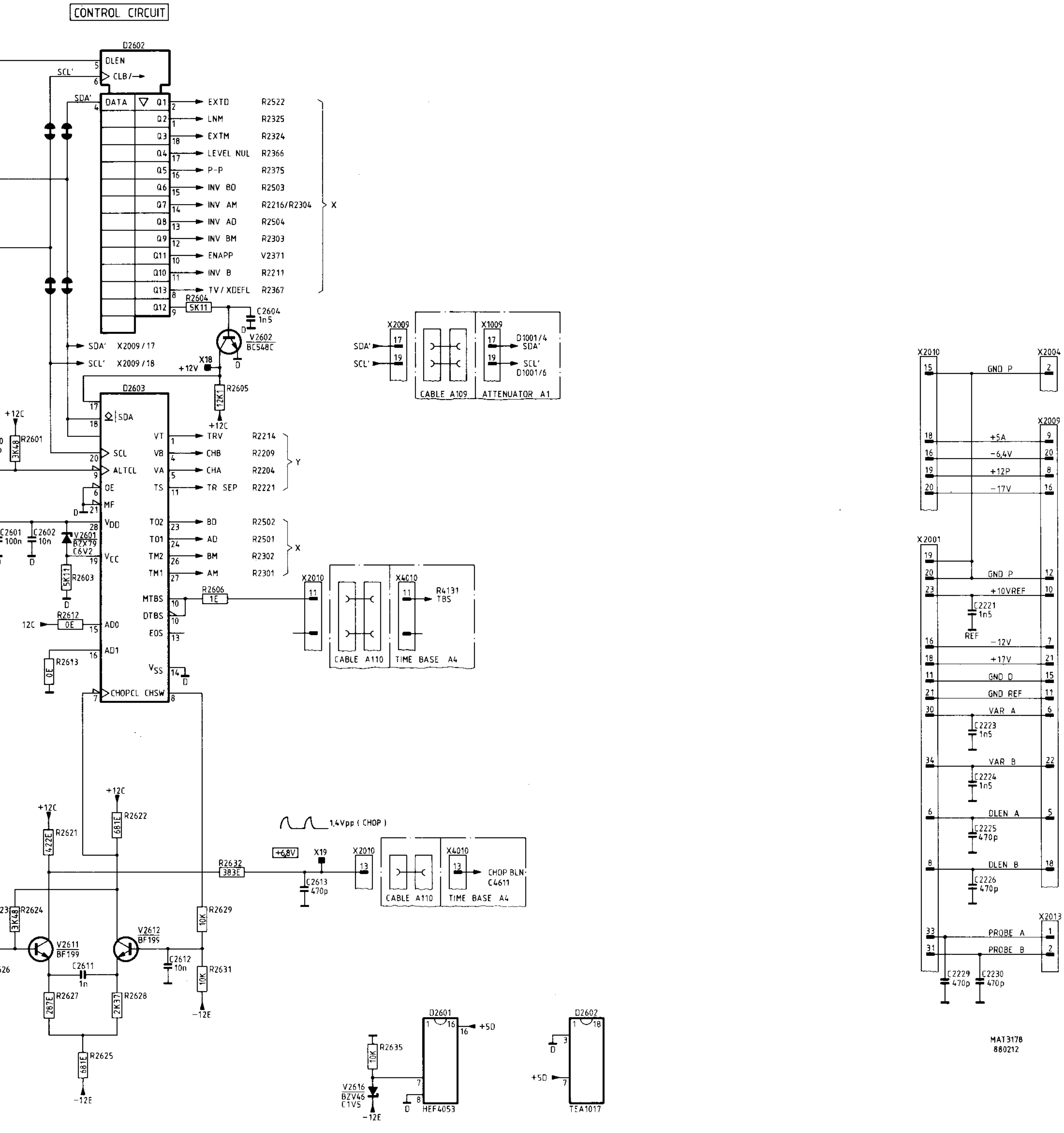
CONTROL CIRCUIT
D2602
DLEN
CLB
DATA
SCL'
SDA'
Q1 EXTD R2522
Q2 LNM R2325
Q3 EXTM R2324
Q4 LEVEL NUL R2366
Q5 P-P R2375
Q6 INV BD R2503
Q7 INV AM R2216/R2304
Q8 INV AD R2504
Q9 INV BM R2303
Q11 ENAPP V2371
Q10 INV B R2211
Q13 TV/XDEFL R2367
Q12
X
R2604 5K11
C2604 1n5
V2602 BC548C
SDA' X2009/17
SCL' X2009/18
X18
+12V
D2603
SDA
SCL
ALTCL
OE
MF
VDD
VCC
AD0
AD1
CHOPCL CHSW
VT TRV R2214
VB CHB R2209
VA CHA R2204
TS TR SEP R2221
Y
TO2 BD R2502
TO1 AD R2501
TM2 BM R2302
TM1 AM R2301
X
MTBS
DTBS
EOS
VSS
R2605 12K1
+12C
R2601 3K48
C2601 100n
C2602 10n
V2601 BZX79 C6V2
R2603 5K11
R2612 0E
12C
R2613 0E
R2606 1E
X2010 11
CABLE A110
X4010 11
R4131 TBS
TIME BASE A4
X2009 17 19
SDA' SCL'
CABLE A109
X1009 17 19
D1001/4 SDA'
SCL' D1001/6
ATTENUATOR A1
1,4Vpp (CHOP)
+6,8V
X19
R2632 383E
C2613 470p
X2010 13
CABLE A110
X4010 13
CHOP BLN C4611
TIME BASE A4
+12C
R2621 422E
R2622 681E
R2624 3K48
V2611 BF199
V2612 BF199
C2611 1n
C2612 10n
R2627 287E
R2628 2K37
R2625 681E
R2629 10K
R2631 10K
-12E
D2601 HEF4053
+5D
R2635 10K
V2616 BZV46 C1V5
D2602 TEA1017
X2010
X2004
GND P
X2009
+5A
-6,4V
+12P
-17V
X2001
GND P
+10VREF
C2221 1n5
REF
-12V
+17V
GND D
GND REF
VAR A
C2223 1n5
VAR B
C2224 1n5
DLEN A
C2225 470p
DLEN B
C2226 470p
X2013
PROBE A
PROBE B
C2229 470p
C2230 470p
MAT3178
880212

REF NO	TYPE
D2601	HEF4053
D2602	TEA1017
D2603	OQ0200

Figure 5.7 Circuit diagram of pre-amplifier, logic control

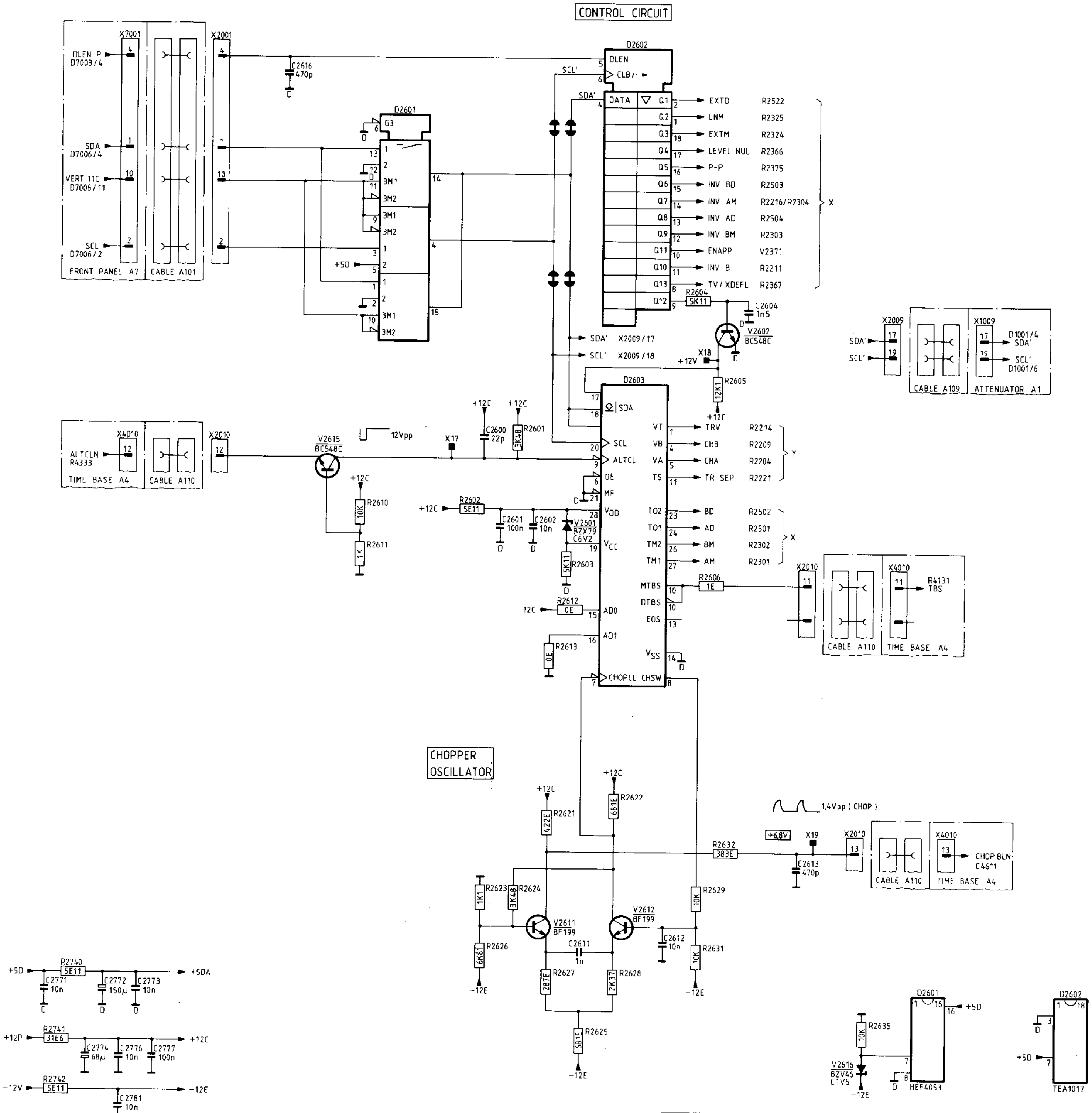
CONTROL CIRCUIT
X7001
DLEN P
D7003/4
SDA
D7006/4
VERT 11C
D7006/11
SCL
D7006/2
FRONT PANEL A7
CABLE A101
X2001
C2616
470p
D2601
G3
3M1
3M2
+5D
D2602
DLEN
SCL'
CLB/
SDA'
DATA
Q1
Q2
Q3
Q4
Q5
Q6
Q7
Q8
Q9
Q11
Q10
Q13
Q12
EXTD
LNM
EXTM
LEVEL NUL
P-P
INV BD
INV AM
INV AD
INV BM
ENAPP
INV B
TV/XDEFL
R2522
R2325
R2324
R2366
R2375
R2503
R2216/R2304
R2504
R2303
V2371
R2211
R2367
X
R2604
5K11
C2604
1n5
V2602
BC548C
SDA' X2009/17
SCL' X2009/18
X18
+12V
R2605
12K1
+12C
X2009
SDA'
SCL'
X1009
D1001/4
SDA'
SCL'
D1001/6
CABLE A109
ATTENUATOR A1
D2603
SDA
SCL
ALTCL
OE
MF
VDD
VCC
AD0
AD1
VSS
CHOPCL
CHSW
VT
VB
VA
TS
TRV
CHB
CHA
TR SEP
R2214
R2209
R2204
R2221
Y
TO2
TO1
TM2
TM1
BD
AD
BM
AM
R2502
R2501
R2302
R2301
MTBS
DTBS
EOS
R2606
1E
X2010
X4010
R4131
TBS
CABLE A110
TIME BASE A4
X4010
ALTCLN
R4333
TIME BASE A4
CABLE A110
X2010
V2615
BC548C
12Vpp
X17
C2600
22p
R2601
3K48
R2610
10K
R2611
1K
R2602
5E11
C2601
100n
C2602
10n
V2601
BZX79
C6V2
R2603
5K11
R2612
0E
12C
R2613
0E
CHOPPER OSCILLATOR
R2621
422E
R2622
681E
1,4Vpp (CHOP)
+6,8V
X19
R2632
383E
C2613
470p
X2010
X4010
CHOP BLN
C4611
CABLE A110
TIME BASE A4
R2623
1K1
R2624
3K48
V2611
BF199
V2612
BF199
C2611
1n
C2612
10n
R2629
10K
R2631
10K
R2626
6K81
R2627
287E
R2628
2K37
R2625
681E
-12E
+5D
R2740
5E11
+5DA
C2771
10n
C2772
150µ
C2773
10n
+12P
R2741
31E6
+12C
C2774
68µ
C2776
10n
C2777
100n
-12V
R2742
5E11
-12E
C2781
10n
R2635
10K
V2616
BZV46
C1V5
HEF4053
TEA1017

REF NO	TYPE
D2601	HEF4053
D2602	TEA1017
D2603	0Q0200

Figure 5.7 Circuit dia

6. XYZ-AMPLIFIER UNIT (A3)

6.1 INTRODUCTION

Unit A3 incorporates two separate pcb's which are connected via X3001. One p.c.b. includes among other things the CRT socket and is connected at the rear of the CRT. The other p.c.b. comprising the proper final X and Z amplifiers is situated at the upper side of the CRT. For ease of description, unit A3 is described as one unit.

The XYZ-amplifier unit consists of:

- Final vertical (Y) amplifier.
- Final horizontal (X) amplifier.
- Final unblanking (Z) amplifier, incl. CRT.

6.2 FINAL VERTICAL (Y) AMPLIFIER

The final Y-amplifier receives its signal from the delay line and supplies the correct vertical signal to the Y-deflection plates of the CRT. For this the signal is processed in four stages:

- V3001, V3002 as a series feedback amplifier, including a delay line compensation network and potentiometer R3007 controlling current source V3003 for correction of any unbalance in the Y-deflection plates of the CRT. These circuits are connected between the emitters of both transistors.
  In this stage the input voltage is converted into a current signal.
- V3004, V3006 as a shunt feedback amplifier, which gives a voltage signal to the next stage.
- V3008, V3009 as a series feedback amplifier, including a final RC-correction network and potentiometer R3038 for gain adjustment to compensate the different CRT sensitivities. V3007 supplies a constant current of 60 mA, i.e. 30 mA for each side. Note that the output again supplies a current signal.
- V3011, V3012 as a common-base amplifier for buffering the final Y-amplifier to the Y-deflection plates. The maximum amplitude on each deflection plate is: 30 mA x 660 E = 20 V approx.

6.3 FINAL HORIZONTAL (X) AMPLIFIER

The input current for X-deflection is obtained from the time-base unit (ref: X- and X+) and processed in three stages, with circuits in the following configurations:

- V3101, V3102 as a common-base amplifier. The current "I" on the collector of both transistors determines the voltage across R3102 and R3116. This voltage is about 1,5 V p-p and feeds the next stage.
- V3103, V3106 as a series feedback amplifier, including a RC-correction network for optimum linearity of the trace and potentiometer R3118 for x1 amplifier adjustment, mounted between the emitters of both transistors. V3104 serves as current source.

- V3112, V3114 are connected as a shunt feedback amplifier, with resistors R3126 and R3134 as the feedback resistors. The transistor source are emitter followers V3109, V3111. This circuit serves as the actual final amplifier, which converts the deflection current into the proper deflection voltage for the X-deflection plates of the CRT. Transistors V3108, V3116 supply the bias current for the circuit.

6.4 FINAL BLANKING (Z) AMPLIFIER AND CRT

The blanking current derived from the Z pre-amplifier of the time-base unit is routed via common base amplifier V3200 and emitter-follower V3201 to the shunt-feedback amplifier V3202. This stage is fed by current source V3203, which gives a constant current of 4 mA. The voltage on the collector of V3202 can vary between +5 V for unblanking and -35 V for fully blanking.
This Z-pulse may contain d.c., l.f. and h.f. components to be applied to grid Gl of the CRT. Since Gl is at a cathode potential of -2000 V, blocking capacitors are required between Gl and the Z-amplifier output. The h.f. component is directly routed via blocking capacitor C3211 to Gl. However, the d.c. and l.f. components are blocked, so these components are first modulated on a 200 kHz carrier signal by V3207 and V3208 to pass blocking capacitor C3209. Then the signal is demodulated again by V3209 and V3211. Finally, the reconstituted d.c. and l.f. components are added to the h.f. component.

Transistor V3251 forms a nominal 70 V zener circuit which provides the voltage difference between the cathode and Gl of the CRT. This bias voltage ensures blanking when there is no input signal. For adaptation to each CRT, this voltage can be varied between about 40 V and 100 V by means of R3252 (BLACK LEVEL). Resistor R3254 maintains the filament at the same potential as the cathode.

Any ripple on the cathode voltage is fed-back via transistor V3213 to the input of the Final Z-amplifier and added to the blanking signal. This means that the differential voltage between Gl and the cathode of the CRT is always fixed. Because this differential voltage determines the intensity of the spot, as a result, the intensity is almost independent of the ripple.

The amplifier stage V3253, V3254 and V3256 provides amplification for the range of the FOCUS control. The range of 0...+10 V gives a final range on G3 of the CRT of -1350 V ... -1600 V.

Resistor R3257 connects the INTENS control to the focus adjustment to maintain a sharply defined trace at varying brightness.

For optimum presetting of the GEOMETRY, the voltage on G5 of the CRT is set to a fixed level of -30 V. The ASTIGMATISM can be varied by means of potentiometer R3267.

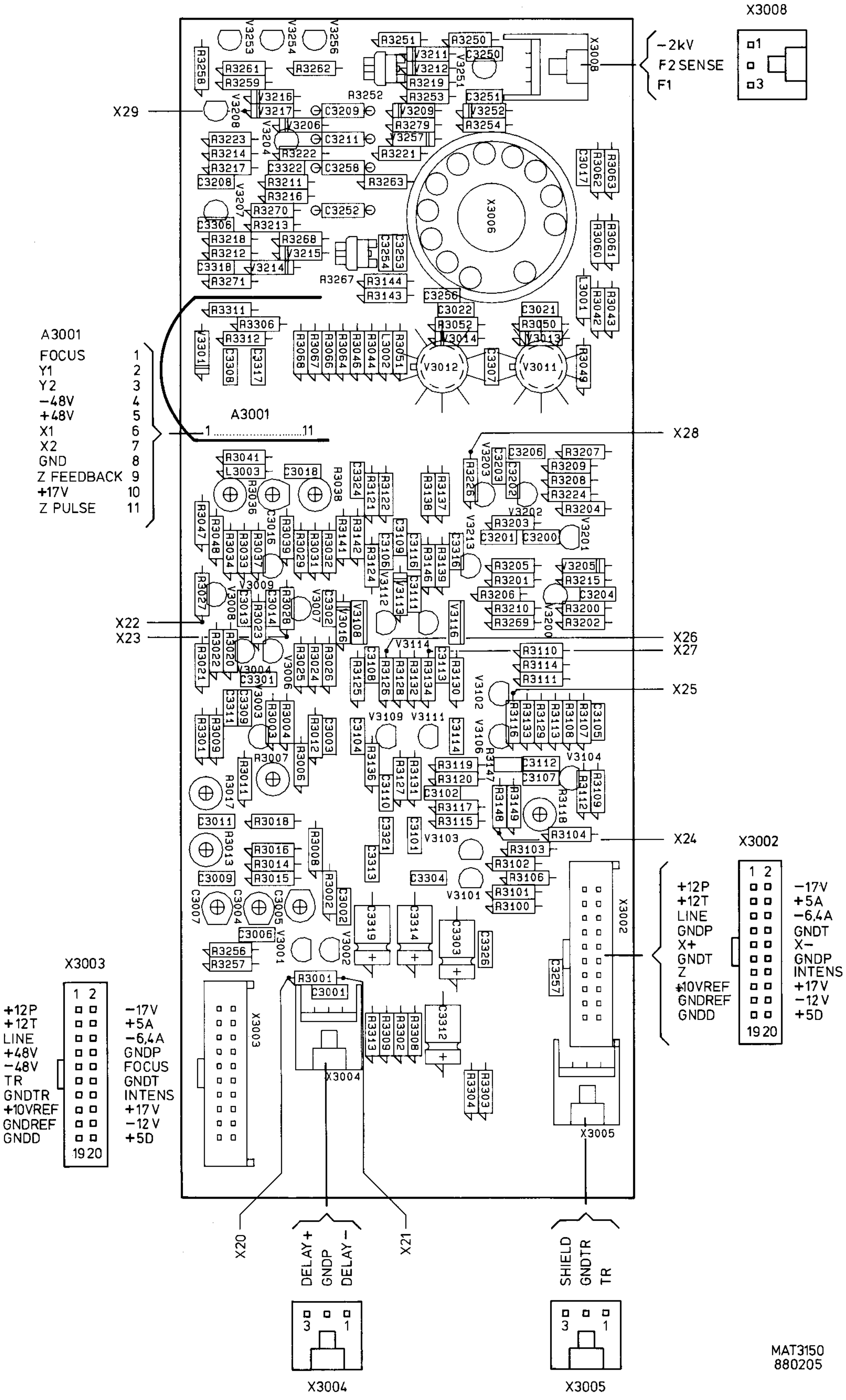
X3008
-2kV
F2 SENSE
F1
X29
A3001
FOCUS 1
Y1 2
Y2 3
-48V 4
+48V 5
X1 6
X2 7
GND 8
Z FEEDBACK 9
+17V 10
Z PULSE 11
X28
X22
X23
X26
X27
X25
X24
X3002
+12P, +12T, LINE, GNDP, X+, GNDT, Z, +10VREF, GNDREF, GNDD
-17V, +5A, -6,4A, GNDT, X-, GNDP, INTENS, +17V, -12V, +5D
X3003
+12P, +12T, LINE, +48V, -48V, TR, GNDTR, +10VREF, GNDREF, GNDD
-17V, +5A, -6,4A, GNDP, FOCUS, GNDT, INTENS, +17V, -12V, +5D
X20
X21
DELAY+
GNDP
DELAY-
SHIELD
GNDTR
TR
X3004
X3005
MAT3150
880205

Figure 6.1 XYZ Amplifier unit p.c.b.

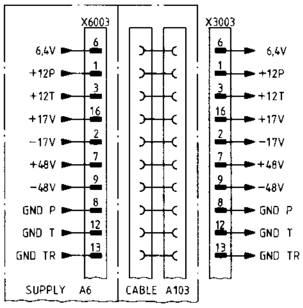
X6003
X3003
6,4V
+12P
+12T
+17V
-17V
+48V
-48V
GND P
GND T
GND TR
SUPPLY A6
CABLE A103

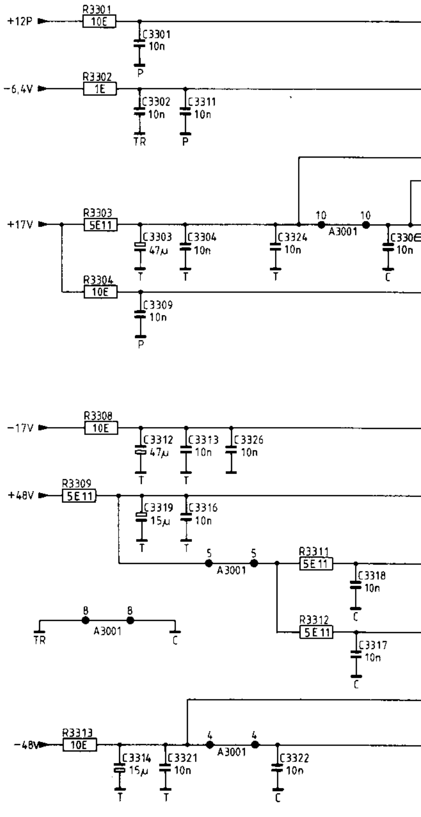
+12P
R3301 10E
C3301 10n
-6,4V
R3302 1E
C3302 10n
C3311 10n
+17V
R3303 5E11
C3303 47µ
C3304 10n
C3324 10n
A3001
R3304 10E
C3309 10n
-17V
R3308 10E
C3312 47µ
C3313 10n
C3326 10n
+48V
R3309 5E11
C3319 15µ
C3316 10n
R3311 5E11
C3318 10n
R3312 5E11
C3317 10n
TR
-48V
R3313 10E
C3314 15µ
C3321 10n
C3322 10n

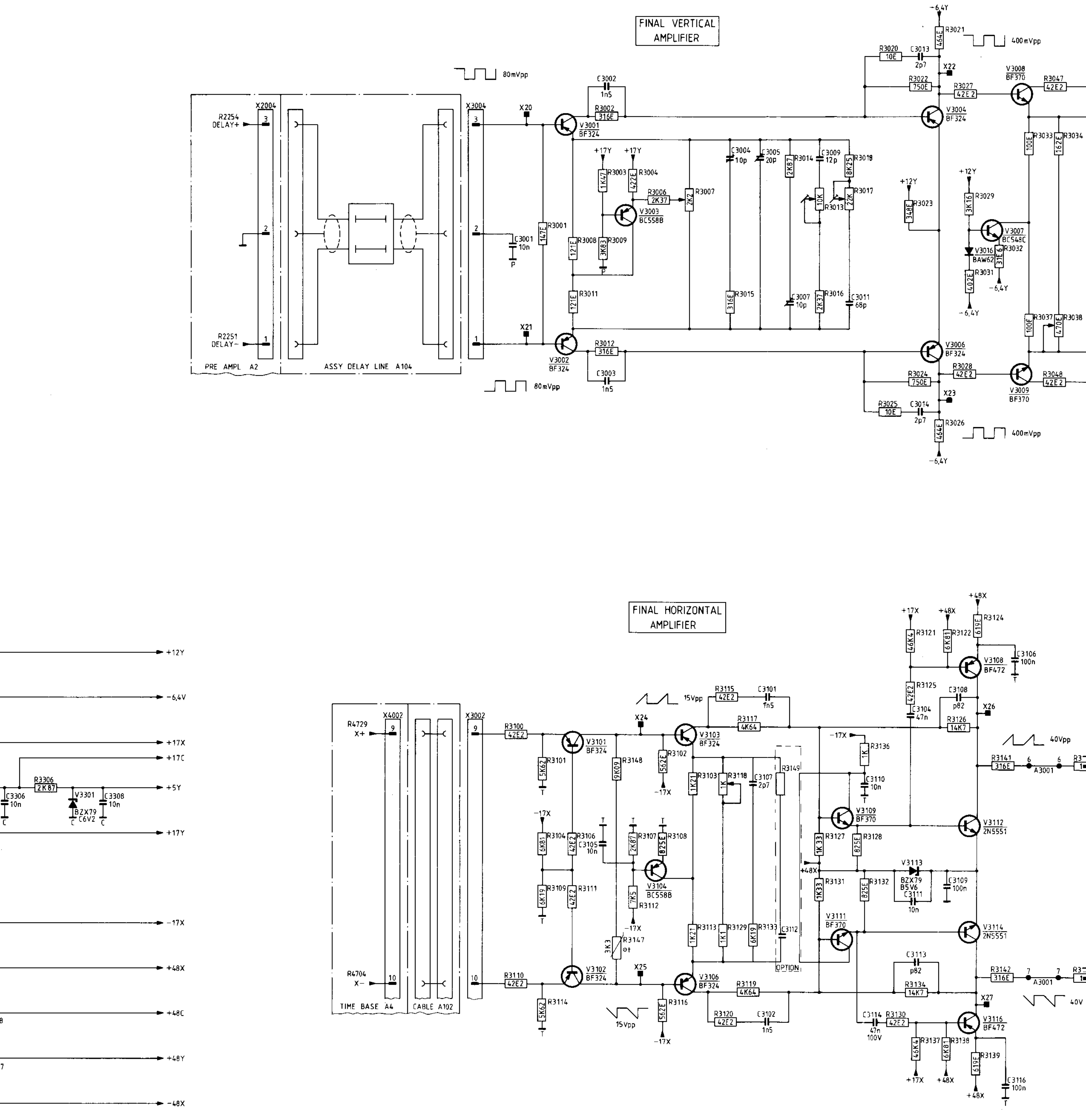
FINAL VERTICAL AMPLIFIER
FINAL HORIZONTAL AMPLIFIER
PRE AMPL A2
ASSY DELAY LINE A104
TIME BASE A4
CABLE A102
R2254 DELAY+
R2251 DELAY−
X2004
X3004
X20
X21
X22
X23
X24
X25
X26
X27
80mVpp
400mVpp
15Vpp
40Vpp
V3001 BF324
V3002 BF324
V3003 BC558B
V3004 BF324
V3006 BF324
V3007 BC548C
V3008 BF370
V3009 BF370
V3016 BAW62
C3001 10n
C3002 1n5
C3003 1n5
C3004 10p
C3005 20p
C3007 10p
C3009 12p
C3011 68p
C3013 2p7
C3014 2p7
R3001 147E
R3002 316E
R3003 1K47
R3004 422E
R3006 2K37
R3007 2K2
R3008 121E
R3009 3K83
R3011 121E
R3012 316E
R3013 10K
R3014 2K87
R3015 316E
R3016 2K37
R3017 22K
R3018 8K25
R3020 10E
R3021 464E
R3022 750E
R3023 348E
R3024 750E
R3025 10E
R3026 464E
R3027 42E2
R3028 42E2
R3029 3K16
R3031 402E
R3032 31E6
R3033 100E
R3034 162E
R3037 100E
R3038 470E
R3047 42E2
R3048 42E2
+17Y
+12Y
−6,4Y
R4729 X+
R4704 X−
X4002
X3002
V3101 BF324
V3102 BF324
V3103 BF324
V3104 BC558B
V3106 BF324
V3108 BF472
V3109 BF370
V3111 BF370
V3112 2N5551
V3113 BZX79 B5V6
V3114 2N5551
V3116 BF472
C3101 1n5
C3102 1n5
C3104 47n
C3105 10n
C3106 100n
C3107 2p7
C3108 p82
C3109 100n
C3110 10n
C3111 10n
C3112
C3113 p82
C3114 47n 100V
C3116 100n
R3100 42E2
R3101 5K62
R3102 562E
R3103 1K21
R3104 6K81
R3106 42E2
R3107 2K87
R3108 825E
R3109 6K19
R3110 42E2
R3111 42E2
R3112 7K5
R3113 1K21
R3114 5K62
R3115 42E2
R3116 562E
R3117 4K64
R3118 1K
R3119 4K64
R3120 42E2
R3121 46K4
R3122 6K81
R3124 619E
R3125 42E2
R3126 14K7
R3127 1K33
R3128 825E
R3129 1K1
R3130 42E2
R3131 1K33
R3132 825E
R3133 6K19
R3134 14K7
R3136 1K
R3137 46K4
R3138 6K81
R3139 619E
R3141 316E
R3142 316E
R3147 3K3
R3148 9K09
R3149
OPTION
A3001
+17X
+48X
−17X
R3306 2K87
V3301 BZX79 C6V2
C3306 10n
C3308 10n
+12Y
−6,4V
+17X
+17C
+5Y
+17Y
−17X
+48X
+48C
+48Y
−48X
−48C

Figure 6.2 Circuit diagram of XYZ

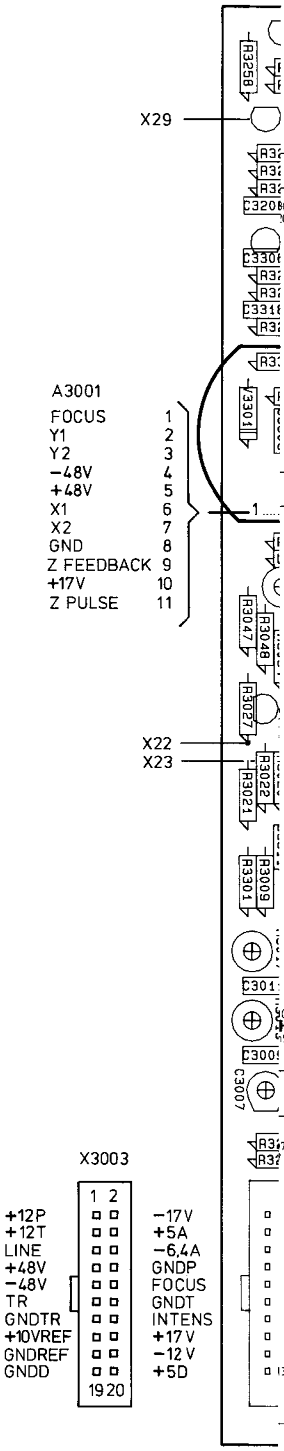
X29
A3001
FOCUS 1
Y1 2
Y2 3
−48V 4
+48V 5
X1 6
X2 7
GND 8
Z FEEDBACK 9
+17V 10
Z PULSE 11
X22
X23
R3258
R3047
R3048
R3027
R3022
R3021
R3301
R3009
C3007
X3003
1 2
+12P −17V
+12T +5A
LINE −6,4A
+48V GNDP
−48V FOCUS
TR GNDT
GNDTR INTENS
+10VREF +17V
GNDREF −12V
GNDD +5D
19 20

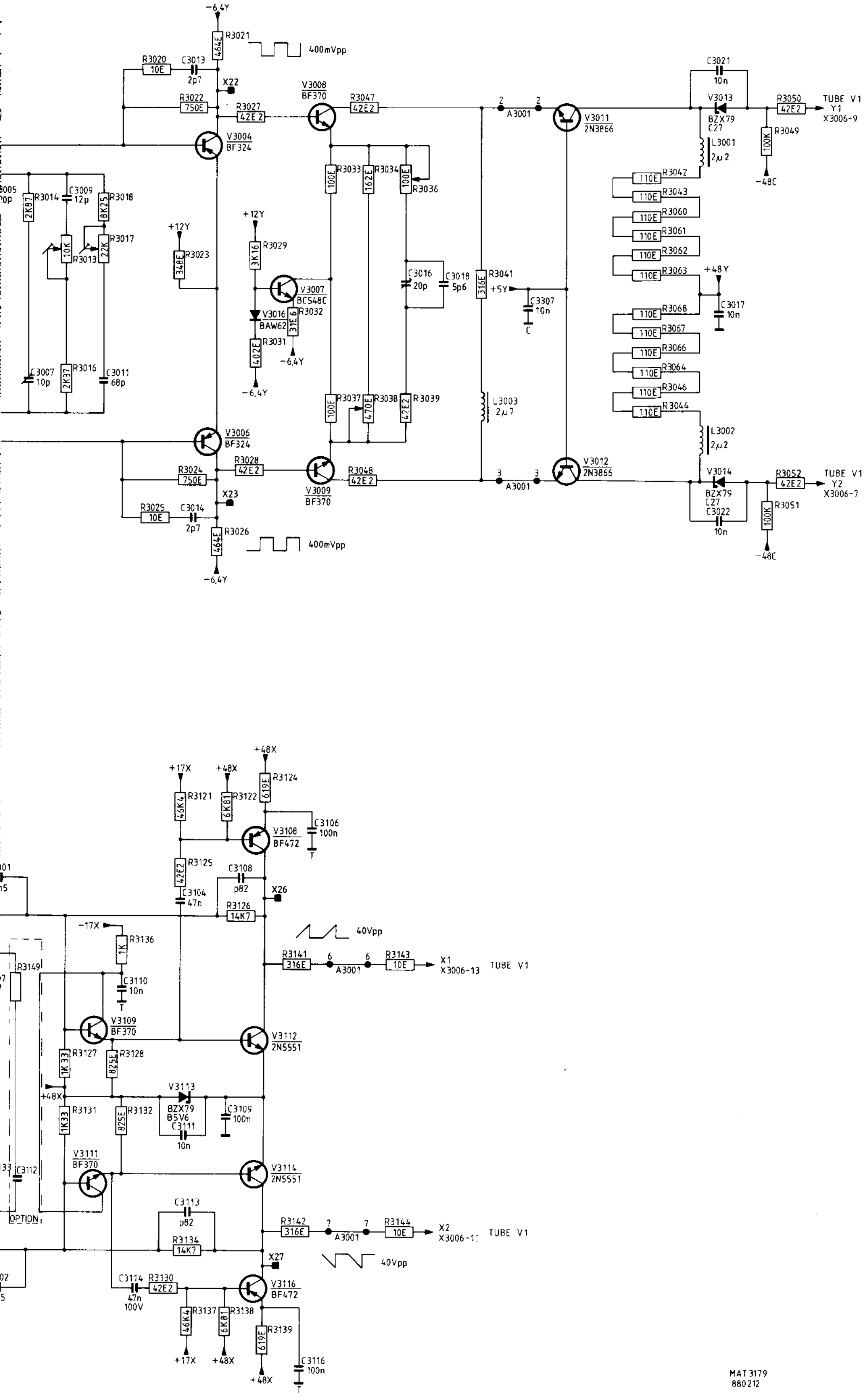
−6,4Y
R3021
464E
400mVpp
R3020
10E
C3013
2p7
X22
R3022
750E
R3027
42E2
V3008
BF370
R3047
42E2
A3001
V3011
2N3866
C3021
10n
V3013
BZX79
C27
R3050
42E2
TUBE V1
Y1
X3006-9
R3049
100K
−48C
L3001
2μ2
V3004
BF324
R3033
100E
R3034
162E
R3036
100E
R3014
2K87
C3009
12p
R3018
8K25
R3013
10K
R3017
22K
+12Y
R3023
348E
+12Y
R3029
3K16
V3007
BC548C
V3016
BAW62
R3032
31E6
R3031
402E
−6,4Y
C3016
20p
C3018
5p6
R3041
316E
+5Y
C3307
10n
R3042
R3043
R3060
R3061
R3062
R3063
110E
+48Y
C3017
10n
R3068
R3067
R3066
R3064
R3046
R3044
C3007
10p
R3016
2K37
C3011
68p
R3037
100E
R3038
470E
R3039
42E2
L3003
2μ7
L3002
2μ2
V3006
BF324
R3024
750E
R3028
42E2
V3009
BF370
R3048
42E2
V3012
2N3866
V3014
BZX79
C27
C3022
10n
R3052
42E2
TUBE V1
Y2
X3006-7
R3051
100K
−48C
X23
R3025
10E
C3014
2p7
R3026
464E
400mVpp
−6,4Y
+48X
R3124
619E
+17X
+48X
R3121
46K4
R3122
6K81
V3108
BF472
C3106
100n
R3125
42E2
C3104
47n
C3108
p82
X26
R3126
14K7
40Vpp
−17X
R3136
1K
C3110
10n
R3141
316E
A3001
R3143
10E
X1
X3006-13
TUBE V1
R3149
V3109
BF370
V3112
2N5551
R3127
1K33
R3128
825E
V3113
+48X
R3131
1K33
R3132
825E
BZX79
B5V6
C3111
10n
C3109
100n
C3112
OPTION
V3111
BF370
V3114
2N5551
C3113
p82
R3134
14K7
R3142
316E
R3144
10E
X2
X3006-11
TUBE V1
X27
40Vpp
C3114
47n
100V
R3130
42E2
V3116
BF472
R3137
46K4
R3138
6K81
R3139
619E
C3116
100n
+17X
+48X
+48X
MAT 3179
880212

Figure 6.1 XYZ Am

re 6.2 Circuit diagram of XYZ amplifier, final X and Y amplifiers

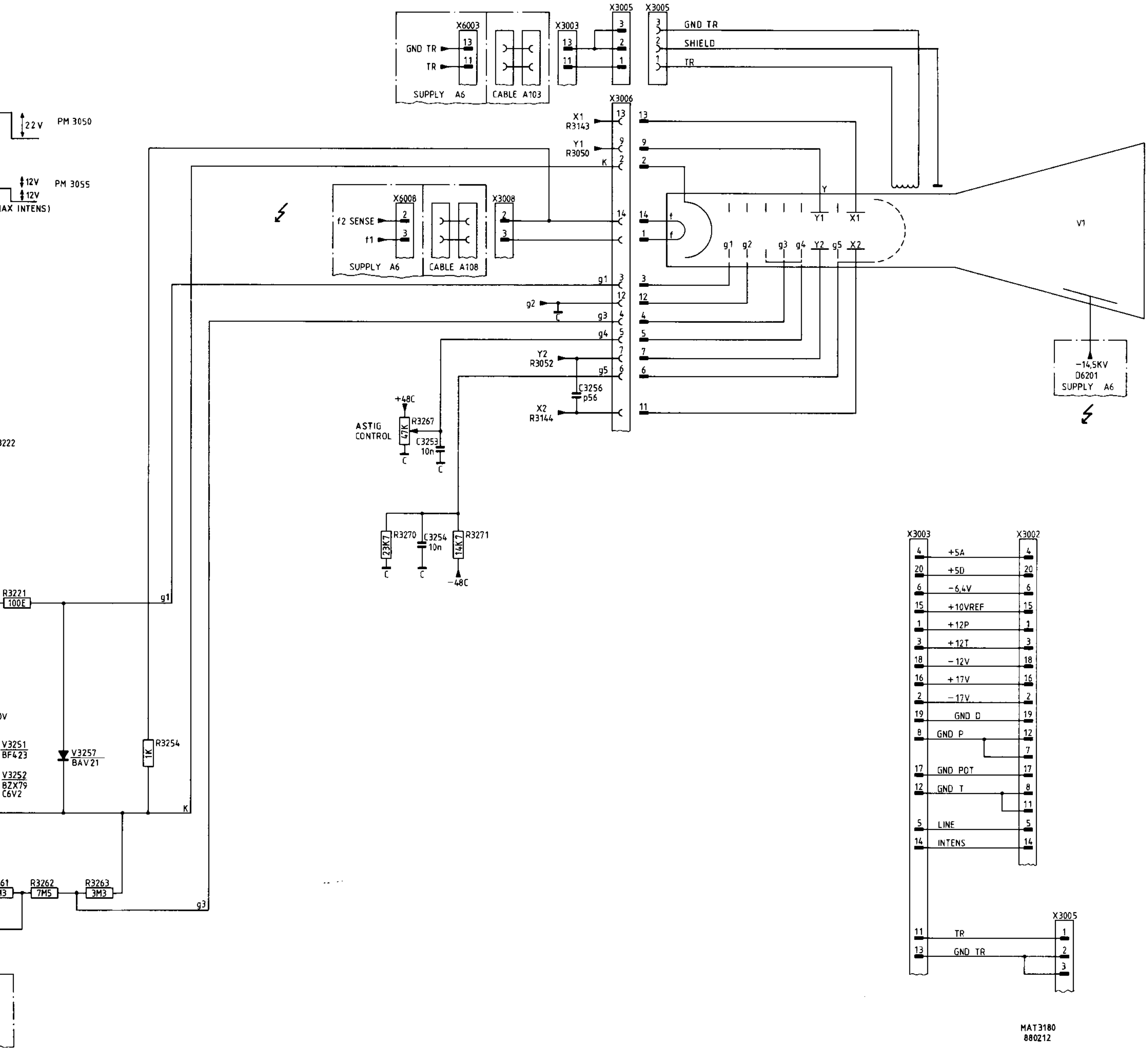
X6003
GND TR
TR
13
11
SUPPLY A6
CABLE A103
X3003
X3005
GND TR
SHIELD
TR
X3006
X1
R3143
Y1
R3050
K
22V
PM 3050
12V
12V
PM 3055
MAX INTENS)
X6008
f2 SENSE
f1
SUPPLY A6
CABLE A108
X3008
g1
g2
g3
g4
Y2
R3052
g5
C3256
p56
X2
R3144
+48C
ASTIG
CONTROL
R3267
47K
C3253
10n
R3270
23K7
C3254
10n
R3271
14K7
-48C
Y
Y1
X1
Y2
X2
V1
-14,5KV
D6201
SUPPLY A6
R3221
100E
R3222
V3251
BF423
V3252
BZX79
C6V2
V3257
BAV21
R3254
1K
R3262
7M5
R3263
3M3
X3003
X3002
+5A
+5D
-6,4V
+10VREF
+12P
+12T
-12V
+17V
-17V
GND D
GND P
GND POT
GND T
LINE
INTENS
X3005
TR
GND TR
MAT3180
880212

Figure 6.4 Circuit diagram of XYZ amplifier, Z amplifier and CRT circuit

8
-17V
+5A
-6,4A
GNDT
X-
GNDP
INTENS
+17V
-12V
+5D
T3150
30205

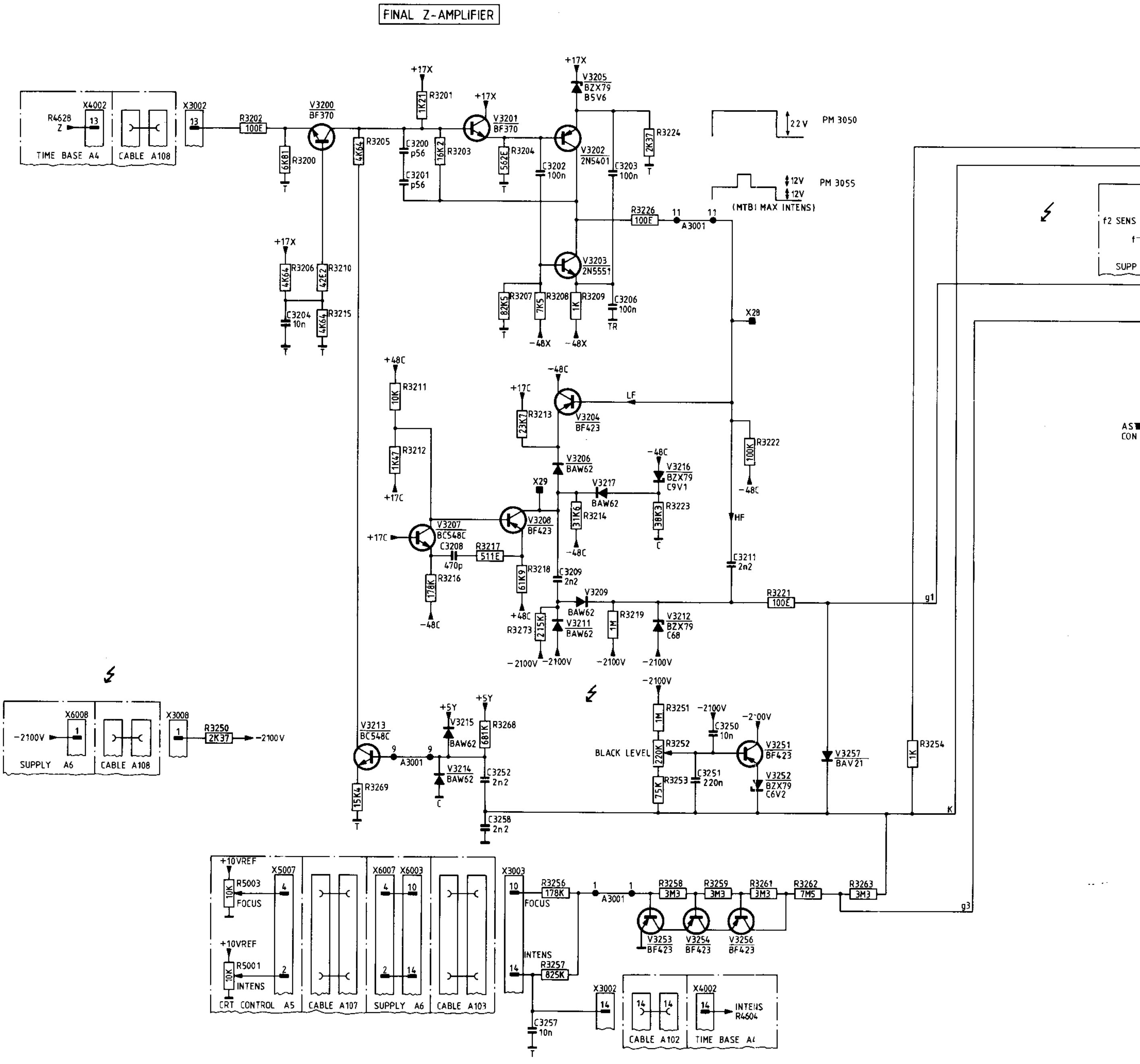
FINAL Z-AMPLIFIER
TIME BASE A4
CABLE A108
X4002
R4628
Z
13
X3002
R3202
100E
V3200
BF370
R3200
6K81
R3205
4K64
+17X
R3201
1K21
C3200
p56
C3201
p56
R3203
16K2
V3201
BF370
R3204
562E
C3202
100n
V3205
BZX79
B5V6
V3202
2N5401
R3224
2K37
C3203
100n
22V
PM 3050
12V
12V
PM 3055
(MTB) MAX INTENS)
R3226
100E
11
A3001
V3203
2N5551
R3206
4K64
R3210
42E2
C3204
10n
R3215
4K64
R3207
82K5
R3208
7K5
R3209
1K
C3206
100n
TR
-48X
X28
+48C
R3211
10K
R3212
1K47
+17C
-48C
V3204
BF423
R3213
23K7
LF
R3222
100K
V3206
BAW62
V3216
BZX79
C9V1
X29
V3217
BAW62
R3223
38K3
V3207
BC548C
V3208
BF423
R3214
31K6
HF
C3208
470p
R3217
511E
R3216
178K
R3218
61K9
C3209
2n2
C3211
2n2
V3209
BAW62
R3221
100E
g1
R3273
215K
V3211
BAW62
R3219
1M
V3212
BZX79
C68
-2100V
SUPPLY A6
X6008
X3008
R3250
2K37
V3213
BC548C
9
+5Y
V3215
BAW62
R3268
681K
V3214
BAW62
C3252
2n2
R3269
15K4
C3258
2n2
R3251
1M
C3250
10n
R3252
220K
BLACK LEVEL
V3251
BF423
C3251
220n
R3253
75K
V3252
BZX79
C6V2
V3257
BAV21
R3254
1K
K
+10VREF
R5003
10K
FOCUS
X5007
4
R5001
INTENS
2
CRT CONTROL A5
CABLE A107
X6007
X6003
10
14
SUPPLY A6
CABLE A103
X3003
R3256
178K
1
R3257
825K
C3257
10n
R3258
3M3
R3259
3M3
R3261
3M3
R3262
7M5
R3263
3M3
g3
V3253
BF423
V3254
BF423
V3256
BF423
CABLE A102
R4604
TIME BASE A4
f2 SENS
SUPP
AS
CON

Figure 6.4 Circ

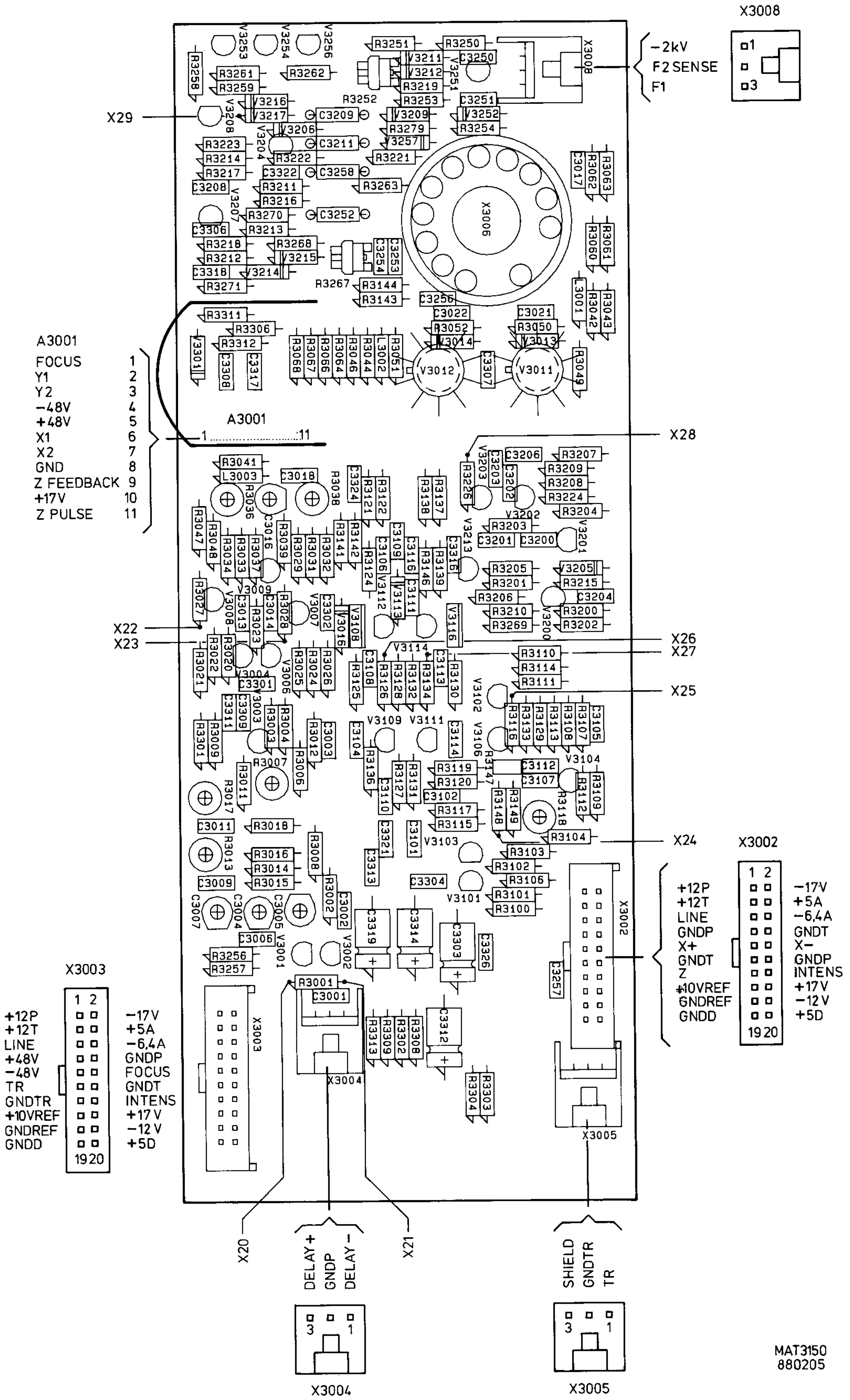
X3008
-2kV
F2 SENSE
F1
1
3
X29
X3006
A3001
FOCUS 1
Y1 2
Y2 3
-48V 4
+48V 5
X1 6
X2 7
GND 8
Z FEEDBACK 9
+17V 10
Z PULSE 11
A3001
1 11
X28
V3012
V3011
X22
X23
X26
X27
X25
X24
X3002
1 2
+12P -17V
+12T +5A
LINE -6,4A
GNDP GNDT
X+ X-
GNDT GNDP
Z INTENS
+10VREF +17V
GNDREF -12V
GNDD +5D
19 20
X3003
1 2
+12P -17V
+12T +5A
LINE -6,4A
+48V GNDP
-48V FOCUS
TR GNDT
GNDTR INTENS
+10VREF +17V
GNDREF -12V
GNDD +5D
19 20
X3004
X3005
X20
DELAY+
GNDP
DELAY-
X21
SHIELD
GNDTR
TR
3 1
X3004
3 1
X3005
MAT3150
880205

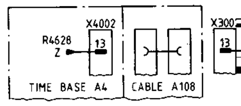
X4002
R4628
Z
13
TIME BASE A4
CABLE A108
X300
13

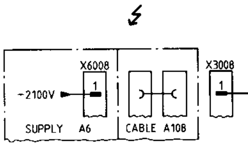
X6008
-2100V
1
SUPPLY A6
CABLE A108
X3008
1

Figure 6.3 XYZ Amplifier unit p.c.b.

7. TIME-BASE UNIT (A4)

The time-base unit consists of:

- Trigger amplifier
- Timing circuit
- Sweep generators
- X DEFL amplifier, incl. display mode switch
- Horizontal pre-amplifier
- Z amplifier

As a supplement, the timing diagrams for several conditions of the time base are given in section 7.6.

All control pulses for this unit are generated by the time-base control circuit, via the I^{2}C bus. Integrated circuits D4001 and D4002 convert this series DATA into the parallel control pulses, provided that DLEN TB1, and DLEN TB2 are HIGH.

7.1 TRIGGER AMPLIFIER

* MTB triggering:

The symmetrical trigger current signals TRIGM+ and TRIGM- are derived from the pre-amplifier unit and converted into the asymmetrical MTB trigger voltage via the shunt feedback amplifier V4003 and V4006. The amplifier of this MTB trigger signal is the summation of the voltage swings across R4002 and R4003, which are proportional to the current swing of TRIGM+ and TRIGM-.

* TV triggering:

When the signal TVMTB goes LOW, the normal trigger path is blocked via V4005 and V4007 and the trigger signal is routed via the TV trigger stage V4009...V4018. Transistor V4009 serves to clip the synchronisation pulse and LINE/FRAME selection is obtained by 4016.

* DTB triggering:

The DTB triggering is almost similar to the MTB triggering. For TV triggering, the trigger signal is obtained from V4012 and, determined by C4024; only TV LINE triggering can serve as a DTB trigger signal for TV pictures.

7.2 TIMING CIRCUIT (see figure 7.1)

The timing for the entire time-base circuit is obtained by D4103 together with its associated components.

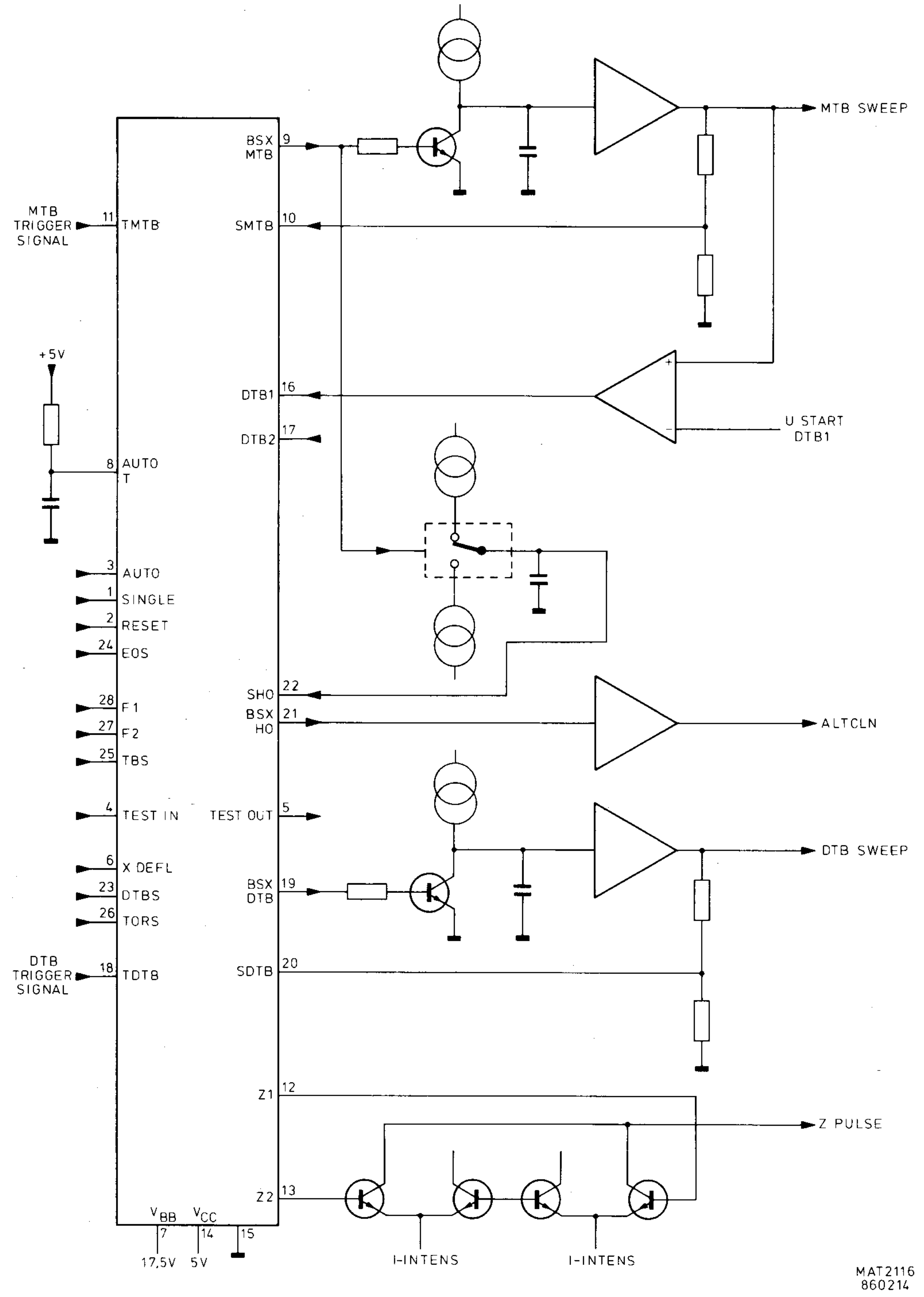
MTB SWEEP
BSX MTB
9
MTB TRIGGER SIGNAL
11
TMTB
SMTB
10
+5V
DTB1
16
DTB2
17
U START DTB1
8
AUTO T
3
AUTO
1
SINGLE
2
RESET
24
EOS
SHO
22
BSX HO
21
ALTCLN
28
F1
27
F2
25
TBS
4
TEST IN
TEST OUT
5
DTB SWEEP
6
X DEFL
23
DTBS
26
TORS
BSX DTB
19
DTB TRIGGER SIGNAL
18
TDTB
SDTB
20
Z1
12
Z PULSE
Z2
13
V_BB
V_CC
7
14
15
17,5V
5V
I-INTENS
I-INTENS
MAT2116
860214

Figure 7.1 D4103 configuration

D4103 has the following relevant pin connections:

Pin	Name	INPUT-OUTPUT	Description
1	SINGLE	TTL-input	Selects the single time-base mode.
2	RESET	TTL-input	Stops the sweep and starts the hold off sweep.
3	AUTO	TTL-input	Selects the AUTO trigger mode, the MTB is free-running after the last trigger pulse.
4	TESTIN	TTL-input	Selects the possibility to drive several functions (TESTOUT) in combination with SINGLE and RESET.
5	TESTOUT	TTL-output	--
6	X DEFL	TTL-input	Activates the Z1 and Z2 outputs.
7	Vbb	-	+1,5 V supply input.
8	AUTOTIME	input	RC-time determination (100 ms) for the AUTO trigger mode.
9	BSXMTB	TTL-output	Discharges the MTB-sweep capacitor(s).
10	SMTB	SCHMITT-input	Determines the end of the MTB-sweep.
11	TMTB	SCHMITT-input	Determines the start of the MTB-sweep.
12	Z2	TTL-output	Determines the blanking of the CRT.
13	Z1	TTL-output	Determines the blanking of the CRT.
14	GND	-	Ground.
15	Vcc	-	+5 V supply input.
16	DTB1	SCHMITT-input	DTB starts, or starts after trigger pulse.
17	DTB2	-	not used, connected to ground.
18	TDTB	SCHMITT-input	Triggers the DTB-sweep when required.
19	BSXDTB	TTL-output	Discharges the DTB sweep capacitor.
20	SDTB	SCHMITT-input	Determines the end of the DTB-sweep.
21	BSXHO	TTL-output	Determines the ALT clock pulse
22	SHO	SCHMITT-input	Determines the end of the Hold-off sweep.
23	DTBS	-	not used; connected to +5 A.
24	EOS	-	Not used; connected to +5 A.
25	TBS	TTL-input	Determines the MTB-unblanking (HIGH) or the DTB-unblanking (LOW).
26	TORS	TTL-input	Determines the STARTS condition (LOW) or TRIG'D condition (HIGH) of the DTB.
27	F1	TTL-input	Determines the selection for the different horizontal Display modes.
28	F2	TTL-input	

F1	F2	Display mode
0	0	MTB
0	1	MTBI
1	0	DTB
1	1	MTBI and DTB

NOTE: All SCHMITT-inputs are at +2,5 V level.

7.3 SWEEP GENERATORS

Because the MTB and DTB sweep generators are almost similar, only the MTB sweep generator is described.

* MTB sweep generator (See figure 7.2):

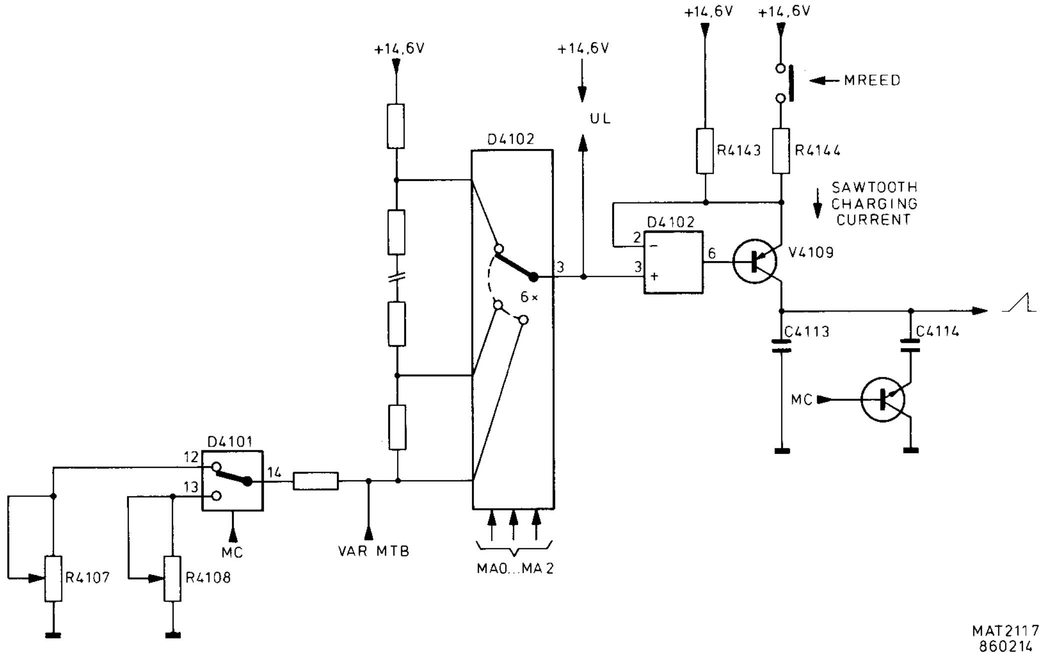
+14.6V
+14.6V
+14.6V
+14.6V
MREED
UL
D4102
R4143
R4144
SAWTOOTH
CHARGING
CURRENT
D4102
2
3
-
+
6
V4109
3
6×
C4113
C4114
MC
D4101
12
13
14
MC
VAR MTB
MA0...MA2
R4107
R4108
MAT2117
860214

Figure 7.2 Simplified diagram of the MTB

The MTB sawtooth charging current $\frac{U1}{\text{R4143 (and R4144)}}$ determines the sweep speed via C4113 (+C4114).
The circuit is controlled by the following address lines:

- MA0...MA2, for interconnection of D4102-3 to an input pin, thus giving six different voltage levels U1 with respect to +14,6 V.
- MREED, for addition of R4144 to the sawtooth charging circuit.
- MC, for addition of C4114 to the sawtooth charging circuit and for switching over between calibration pot.meters R4107 (50ns...100us) and R4108 (200 us...0,5 s).

The voltage U1 can be continuously varied by moving the VAR MTB control R7009 from the CAL position. Thus a sweep variation of 1:2,5 can be obtained.

The function table for the MTB and DTB sweep generators is given below:

sweep speed	MA2 (DA2)	MA1 (DA1)	MA0 (DA0)	MREED (DREED)	MC (DC)		
50 ns	1	1	1	0	0		
.1 us	0	1	0	0	0		
.2	0	0	1	0	0		
.5	0	0	0	0	0		
1	0	1	1	0	0		
2	1	0	0	1	0		
5	1	1	1	1	0		
10	0	1	0	1	0	MTB-range	DTB-range
20	0	0	1	1	0		
50	0	0	0	1	0		
.1 ms	0	1	1	1	0		
.2	1	0	0	0	1		
.5	1	1	1	0	1		
1	0	1	0	0	1		
2	0	0	1	0	1		
5	0	0	0	0	1		
10	0	1	1	0	1		
20	1	0	0	1	1		
50	1	1	1	1	1		
.1 s	0	1	0	1	1		
.2	0	0	1	1	1		
.5	0	0	0	1	1		

NOTE: when MREED and DREED are low, then RELAY is switched on.

The MTB sawtooth current is fed to the buffer circuit, where the h.f. sweep components (to 2 usec) are routed via C4116 and V4118, V4119. The l.f. sweep components (0,5 sec...2usec) is routed via N4103.

Finally the MTB sweep and DTB sweep voltages are applied to the horizontal display mode switch.

* Delay time multiplier circuit:

Output signal DTB1 of comparator stage D4402 controls the starting point of the DTB depending on the adjusting of the DTM front-panel control. This signal is applied to D4103-16.
The comparator has two inputs:

- D4402-4 receives the MTB sawtooth voltage.
- D4402-2 receives a fixed adjusted voltage between 0...5 V. Digital-to-analogue (DAC) converter D4401 converts the digital information of the DTM setting (SDA-input) into an analogue current (pin 22), which in its turn is converted into the fixed comparator voltage via N4101.

At the moment that the instantaneous d.c. value of the MTB sawtooth exceeds the voltage on D4402-2, signal DTB1 goes higher.

* Hold-off circuit

During the MTB sweep, capacitor C4304 is discharged. In the lower sweep speeds (lower then 10us) capacitor C4302 is also discharged via V4306. After the MTB sweep, the capacitor(s) are charged via current source V4304 until the voltage across C4304 reaches the +2,5 V level. This voltage is applied to D4103 as the SHO signal and determines if the MTB can generate a new sweep.

Depending on the HOLD OFF control potentiometer R7011 adjustment, a part of the charging current leaks away via V4301 and thus continuously variation of the charging time (i.e. hold-off time) is obtained. When BSXMTB goes LOW, the MTB starts to run again and at the same time C4304 (and C4302) are discharged again via V4309.

* Alt. clock generator:

At the end of each MTB sweep the signal BSXHO goes low. This signal is routed to V4322 to generate the ALTCLN pulse, which is applied to the pre-amplifier unit A2. The ALTCLN pulse controls the channel switch on that unit at the end of each MTB sweep. When SHO reaches the +2,5 V level, BSXHO goes HIGH again.

7.4 X DEFL AMPLIFIER, AND DISPLAY MODE SWITCH

* X DEFL amplifier

The circuit for converting the symmetrical X DEFL+ and X DEFL- signals into the asymmetrical voltage, applied to the display mode switch is identical to the MTB trigger input. However, this circuit can be switched-off by diodes V4500 and V4505, provided that the X DEFL signal is HIGH.

* Horizontal display mode switch:

The three deflection signals MTB, DTB or X DEFL are switched to the horizontal pre-amplifier via diode switches. These switches are under control of the signals X DEFL and TBS. The output of the circuit is applied to R4701 on the horizontal pre-amplifier stage.
The logic table is given below:

X DEFL	TBS	Output
1	*	X DEFL signal
0	0	DTB sawtooth
0	1	MTB sawtooth

7.5 Z-AMPLIFIER

* Z-switch:

The Z-switch N4601 is configured as two differential amplifiers with a common current output to R4625. The stage is supplied by a constant current source via pin 1 and pin 8. The inputs Z1 and Z2 are derived from the timer stage D4103 and determine the unblanking of the CRT according to figure 7.3.

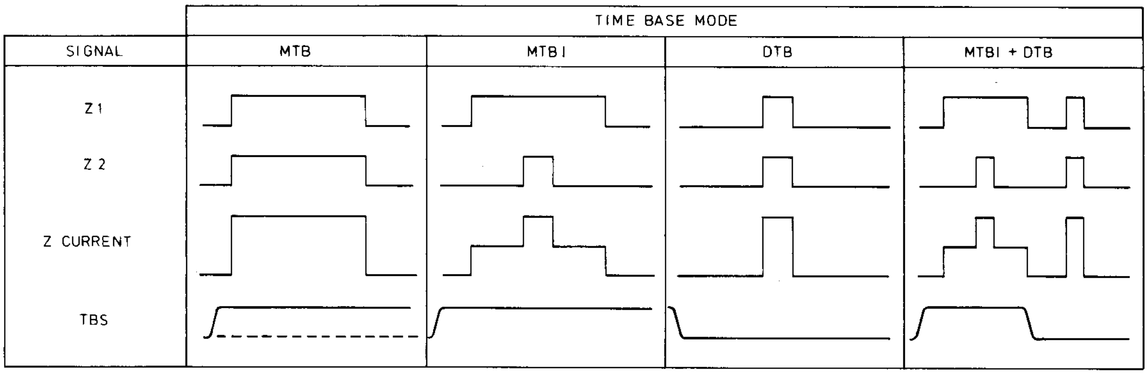

MAT2118
851011

Figure 7.3 Z-logic for the different TB modes

When both Z1 and Z2 are HIGH, the trace gives normal intensity; when only Z1 or Z2 is HIGH the trace gives half intensity. This means that, in MTBI mode, the DTB part of the trace is more intensified than the MTB part of the trace. The ratio between both intensities is adjusted by R4616. The amplitude of the Z-current can be varied by the front-panel INTENS control R5001. The slider of this control potentiometer drives the base pin 2 and pin 7 of both current sources.

To prevent burn-in of the CRT in the lower sweep speeds
0,5 sec...50 usec, signal ZB is LOW and reduces the voltage to pin 2 and pin 7.

Signal ZA is a software-controlled pulse to blank the trace when the AMPL/DIV switch is used.

* Z Pre-amplifier:

In normal condition, the fully current for CRT blanking derived from N4601 is routed via R4625, V4612 and R2628 to the XYZ Amplifier A3.

However, there are two conditions for additional blanking:

- In the chopped mode of the vertical channels the display is blanked during switching over between channels. This happens by connecting the CHOPBLN pulse to V4611. When this pulse is HIGH, transistor V4611 conducts and a part of the blanking current flows via V4611 e-c to the +5 kV rail.
- if a HIGH level is applied to the external Z MOD input on the rear panel, this signal causes conducting of V4616 so that a part of the blanking current flows via V4616 e-c to the +5 kV rail.

7.6 TIMING DIAGRAMS

The following figures gives the timing diagrams for D4103 for several conditions of the time-base. The conditions are:

- a free running MTB sweep
- a triggered MTB-sweep with a delayed sweep
- a triggered MTB-and DTB-sweep

* Free running MTB sweep:

SINGLE	0
RESET	0
AUTO	1
TEST IN	0
X DEFL	0
TORS	0
F1	0
F2	0
DTBS	0
EOS	1
TBS	1

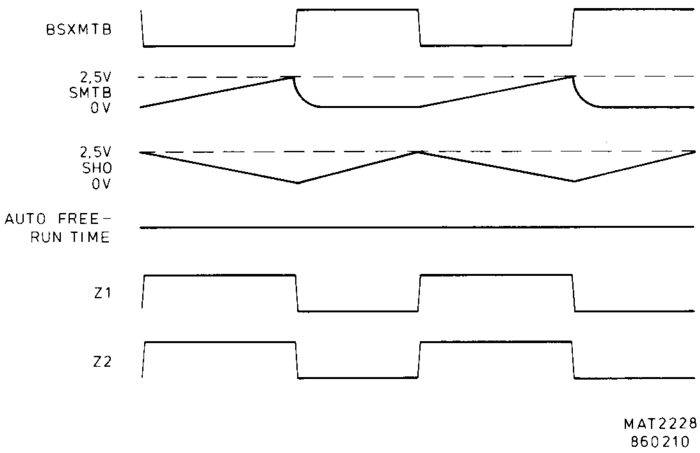
BSXMTB
2,5V
SMTB
0V
2,5V
SHO
0V
AUTO FREE-
RUN TIME
Z1
Z2
MAT2228
860210

Figure 7.4 Free-running MTB sweep-timing diagram

* Triggered MTB-sweep with a delayed sweep:

SINGLE	0
RESET	0
AUTO	1
TEST IN	0
X DEFL	0
TORS	0
F1	0
F2	1
DTBS	0
EOS	1
TBS	1

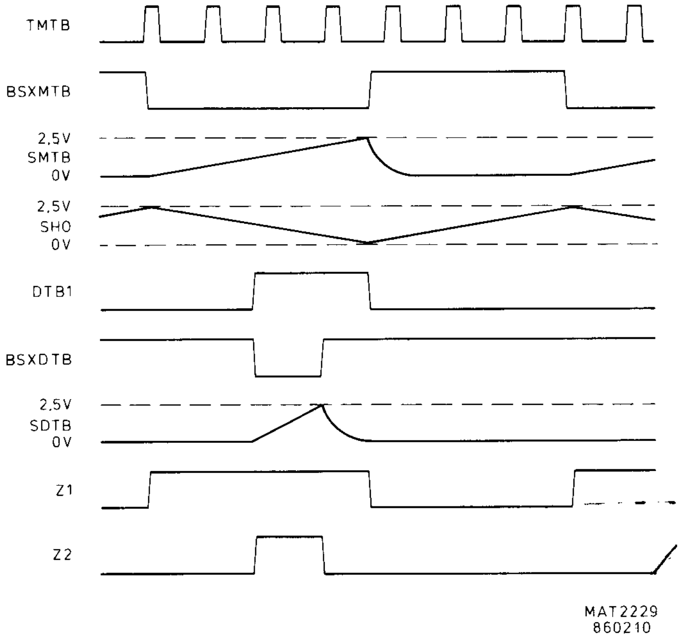
TMTB
BSXMTB
2,5V
SMTB
0V
2,5V
SHO
0V
DTB1
BSXDTB
2,5V
SDTB
0V
Z1
Z2
MAT2229
860210

Figure 7.5 Triggered MTB-sweep with a delay sweep-timing diagram

* Triggered MTB- and DTB-sweep:

SINGLE	0
RESET	0
AUTO	1
TEST IN	0
X DEFL	0
TORS	1
F1	1
F2	1
DTBS	0
EOS	1
TBS	*

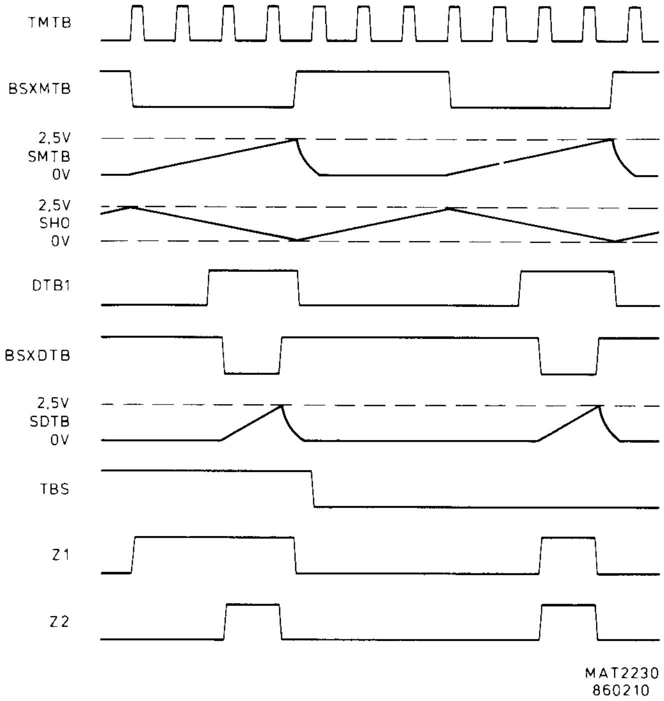
TMTB
BSXMTB
2,5V
SMTB
0V
2,5V
SHO
0V
DTB1
BSXDTB
2,5V
SDTB
0V
TBS
Z1
Z2
MAT2230
860210

Figure 7.6 Triggered MTB- and DTB-sweep-timing diagram

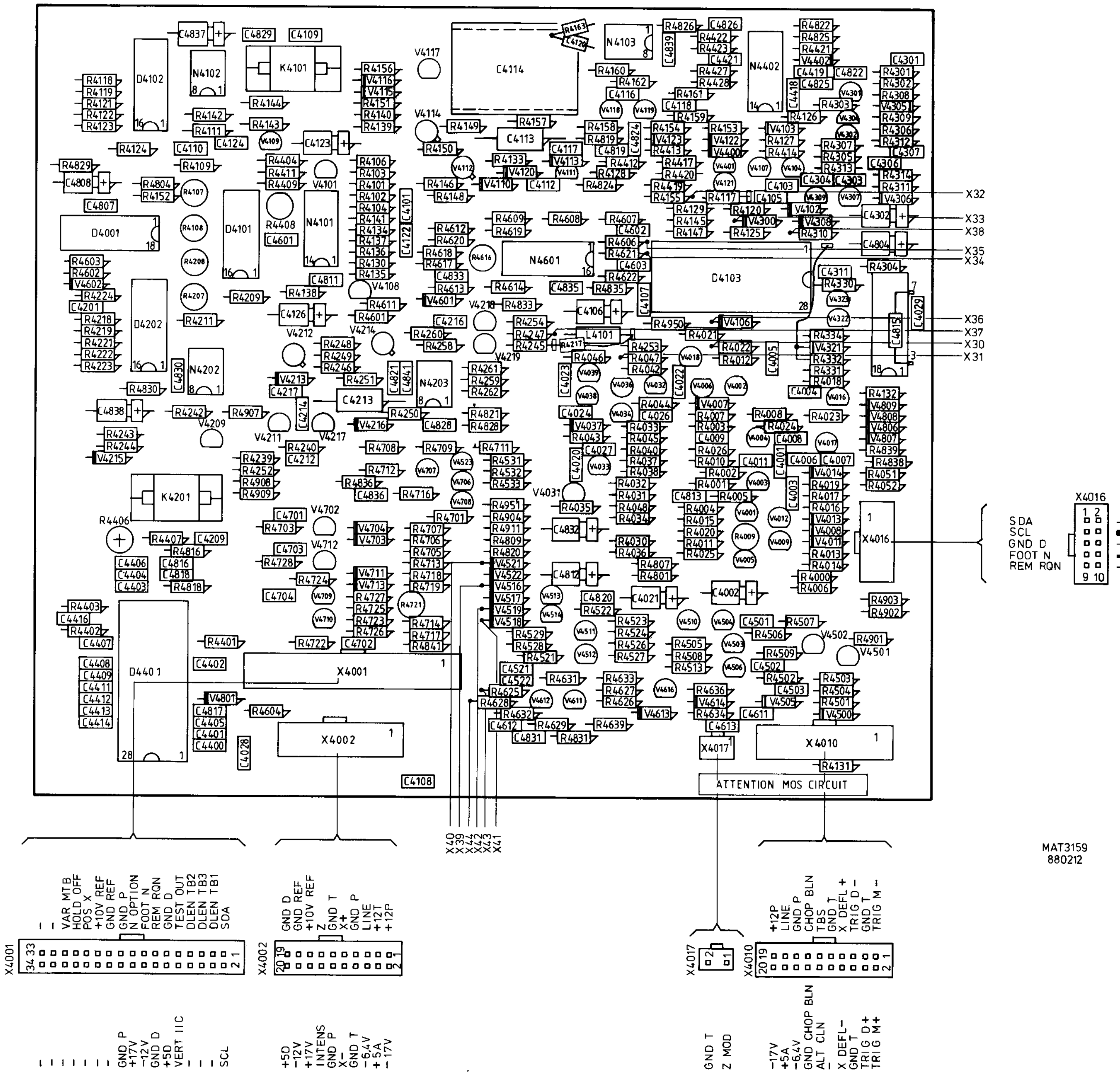
ATTENTION MOS CIRCUIT
X4001
- - VAR MTB HOLD OFF POS X +10V REF GND REF GND P N OPTION FOOT N REM RQN GND D TEST OUT DLEN TB2 DLEN TB3 DLEN TB1 DLEN SDA
- - - - - - - GND P +17V -12V GND D +5D VERT IIC - - - SCL
34 33 2 1
X4002
GND D GND REF +10V REF Z GND T X+ GND P LINE +12T +12P
+5D -12V +17V INTENS GND P X- GND T -6,4V +5A -17V
20 19 2 1
X4017
GND T Z MOD
X4010
+12P LINE GND P CHOP BLN TBS GND T X DEFL+ TRIG D- GND T TRIG M-
-17V +5A -6,4V GND CHOP BLN ALT CLN - X DEFL- GND T TRIG D+ TRIG M+
20 19 2 1
X4016
SDA SCL GND D FOOT N REM RQN
1 2 9 10
X32 X33 X38 X35 X34 X36 X37 X30 X31
X40 X39 X42 X44 X43 X41
D4102 N4102 K4101 C4114 N4103 N4402 D4001 D4101 N4101 N4601 D4103 D4202 N4202 N4203 K4201 D4401 X4001 X4002 X4017 X4010
MAT3159
880212

Figure 7.7 Time base unit p.c.b.

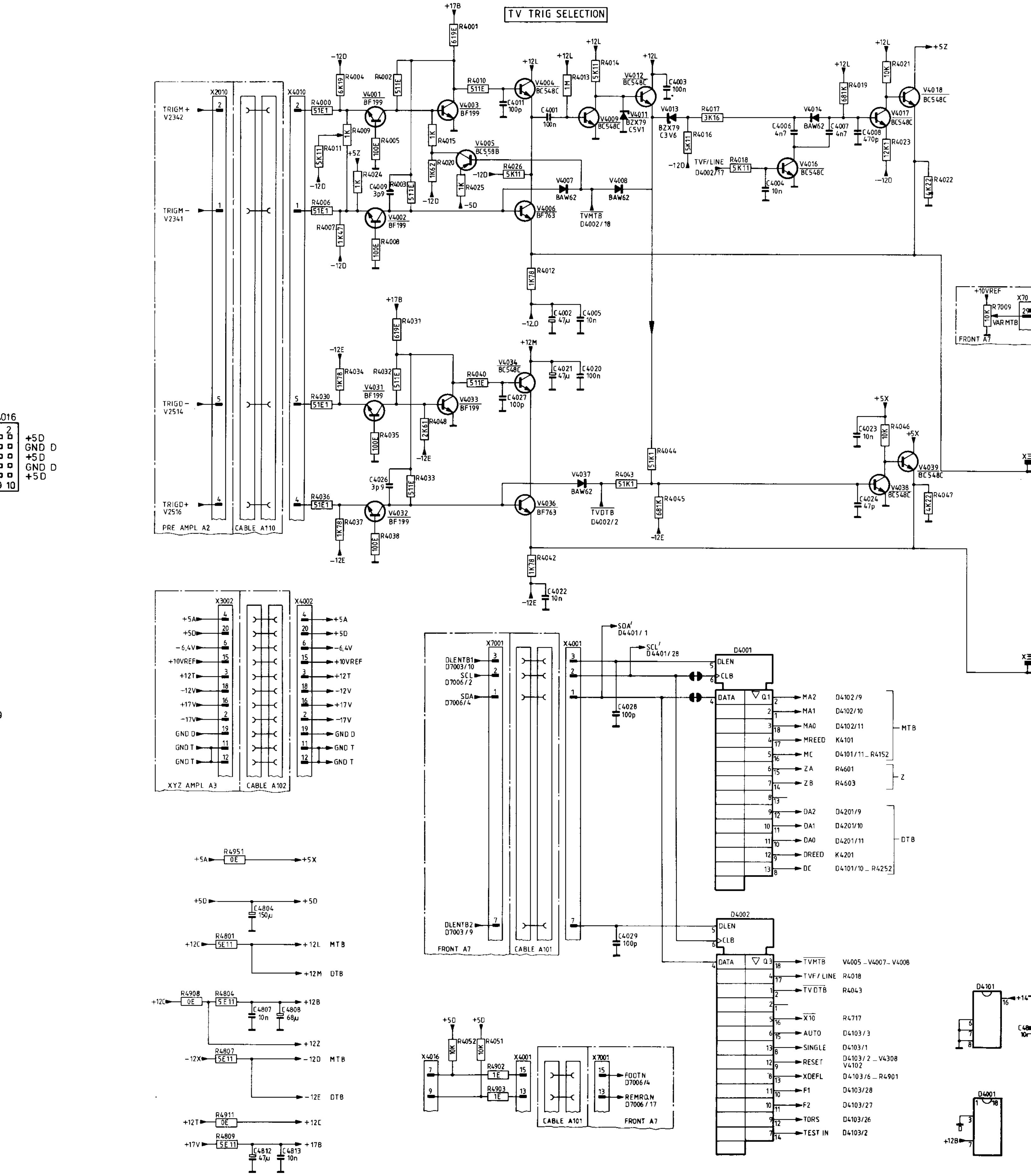
TV TRIG SELECTION
+17B
R4001
619E
-12D
R4004
6K19
R4002
511E
R4010
511E
+12L
V4004
BC548C
+12L
R4013
1M
+12L
R4014
5K11
V4012
BC548C
+12L
C4003
100n
+12L
R4021
10K
+5Z
V4018
BC548C
+12L
R4019
681K
X2010
X4010
TRIGM+
V2342
R4000
51E1
V4001
BF199
V4003
BF199
C4011
100p
C4001
100n
V4009
BC548C
V4011
BZX79
C5V1
V4013
BZX79
C3V6
R4017
3K16
V4014
BAW62
C4006
4n7
C4007
4n7
C4008
470p
V4017
BC548C
R4023
12K1
R4009
1K
R4011
5K11
+5Z
R4005
100E
R4015
1K
V4005
BC558B
R4016
5K11
-12D
TVF/LINE
D4002/17
R4018
5K11
V4016
BC548C
C4004
10n
-12D
R4022
4K22
R4024
1K
C4009
3p9
R4003
511E
R4020
1K62
R4026
5K11
R4025
1K
-5D
V4007
BAW62
V4008
BAW62
TVMTB
D4002/18
TRIGM-
V2341
R4006
51E1
V4002
BF199
V4006
BF763
R4007
1K47
R4008
100E
-12D
R4012
1K78
C4002
47µ
C4005
10n
-12D
+10VREF
X70
R7009
10K
VAR MTB
FRONT A7
+17B
R4031
619E
-12E
R4034
1K78
R4032
511E
+12M
V4034
BC548C
C4021
47µ
C4020
100n
R4040
511E
V4031
BF199
V4033
BF199
C4027
100p
TRIGD-
V2514
R4030
51E1
R4048
2K61
R4035
100E
-12E
+5X
R4046
10K
C4023
10n
+5X
V4039
BC548C
R4044
51K1
C4026
3p9
R4033
511E
V4037
BAW62
R4043
51K1
V4038
BC548C
C4024
47p
R4047
4K22
TRIGD+
V2516
R4036
51E1
V4032
BF199
V4036
BF763
TVDTB
D4002/2
R4045
681K
-12E
R4037
1K78
R4038
100E
-12E
R4042
1K78
C4022
10n
-12E
PRE AMPL A2
CABLE A110
X4016
+5D
GND D
+5D
GND D
+5D
X3002
X4002
+5A
+5D
-6,4V
+10VREF
+12T
-12V
+17V
-17V
GND D
GND T
GND T
XYZ AMPL A3
CABLE A102
SDA'
D4401/1
SCL'
D4401/28
X7001
X4001
DLENTB1
D7003/10
SCL
D7006/2
SDA
D7006/4
C4028
100p
D4001
DLEN
CLB
DATA
Q1
MA2 D4102/9
MA1 D4102/10
MA0 D4102/11
MREED K4101
MC D4101/11 _ R4152
MTB
ZA R4601
ZB R4603
Z
DA2 D4201/9
DA1 D4201/10
DA0 D4201/11
DREED K4201
DC D4101/10 _ R4252
DTB
+5A
R4951
0E
+5X
+5D
C4804
150µ
+5D
+12C
R4801
5E11
+12L MTB
+12M DTB
DLENTB2
D7003/9
C4029
100p
FRONT A7
CABLE A101
D4002
DLEN
CLB
DATA
Q3
TVMTB V4005 _ V4007 _ V4008
TVF/LINE R4018
TVDTB R4043
X10 R4717
AUTO D4103/3
SINGLE D4103/1
RESET D4103/2 _ V4308 V4102
XDEFL D4103/6 _ R4901
F1 D4103/28
F2 D4103/27
TORS D4103/26
TEST IN D4103/2
+12C
R4908
0E
R4804
5E11
+12B
C4807
10n
C4808
68µ
+12Z
-12X
R4807
5E11
-12D MTB
-12E DTB
+5D
+5D
R4052
10K
R4051
10K
X4016
R4902
1E
R4903
1E
X4001
X7001
FOOTN
D7006/4
REMRQN
D7006/17
CABLE A101
FRONT A7
+12T
R4911
0E
+12C
+17V
R4809
5E11
+17B
C4812
47µ
C4813
10n
D4101
+14
C48
10n
D4001
+12B

Figure 7.8 Circuit diagram of time-base, trigger amplifier MTB and DTB

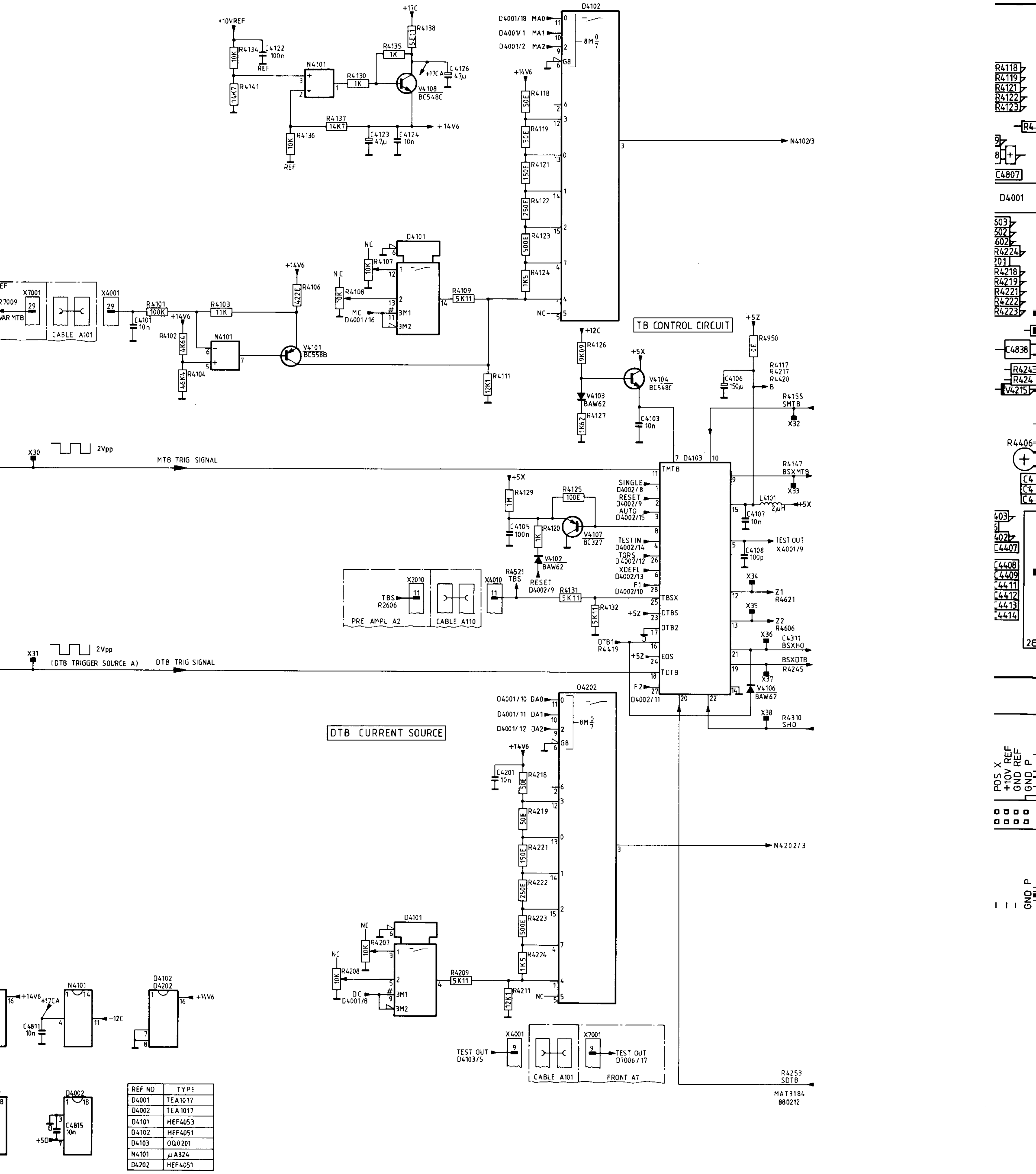
TB CONTROL CIRCUIT
DTB CURRENT SOURCE
MTB TRIG SIGNAL
DTB TRIG SIGNAL
(DTB TRIGGER SOURCE A)
2Vpp
X30
X31
D4101
D4102
D4103
D4202
N4101
V4101 BC558B
V4104 BC548C
V4107 BC327
V4108 BC548C
V4102 BAW62
V4103 BAW62
V4106 BAW62
L4101 2μH
PRE AMPL A2
CABLE A110
CABLE A101
FRONT A7
TEST OUT D4103/5
TEST OUT D7006/17
N4102/3
N4202/3
R4253 SDTB
R4310 SHO
BSXMTB
BSXDTB
BSXHO
SMTB
TMTB
TBSX
DTBS
DTB2
EOS
TDTB
+10VREF
+17C
+14V6
+12C
+5X
+5Z
POS X
+10V REF
GND REF
GND P
MAT3184
880212

REF NO	TYPE
D4001	TEA1017
D4002	TEA1017
D4101	HEF4053
D4102	HEF4051
D4103	OQ0201
N4101	μA324
D4202	HEF4051

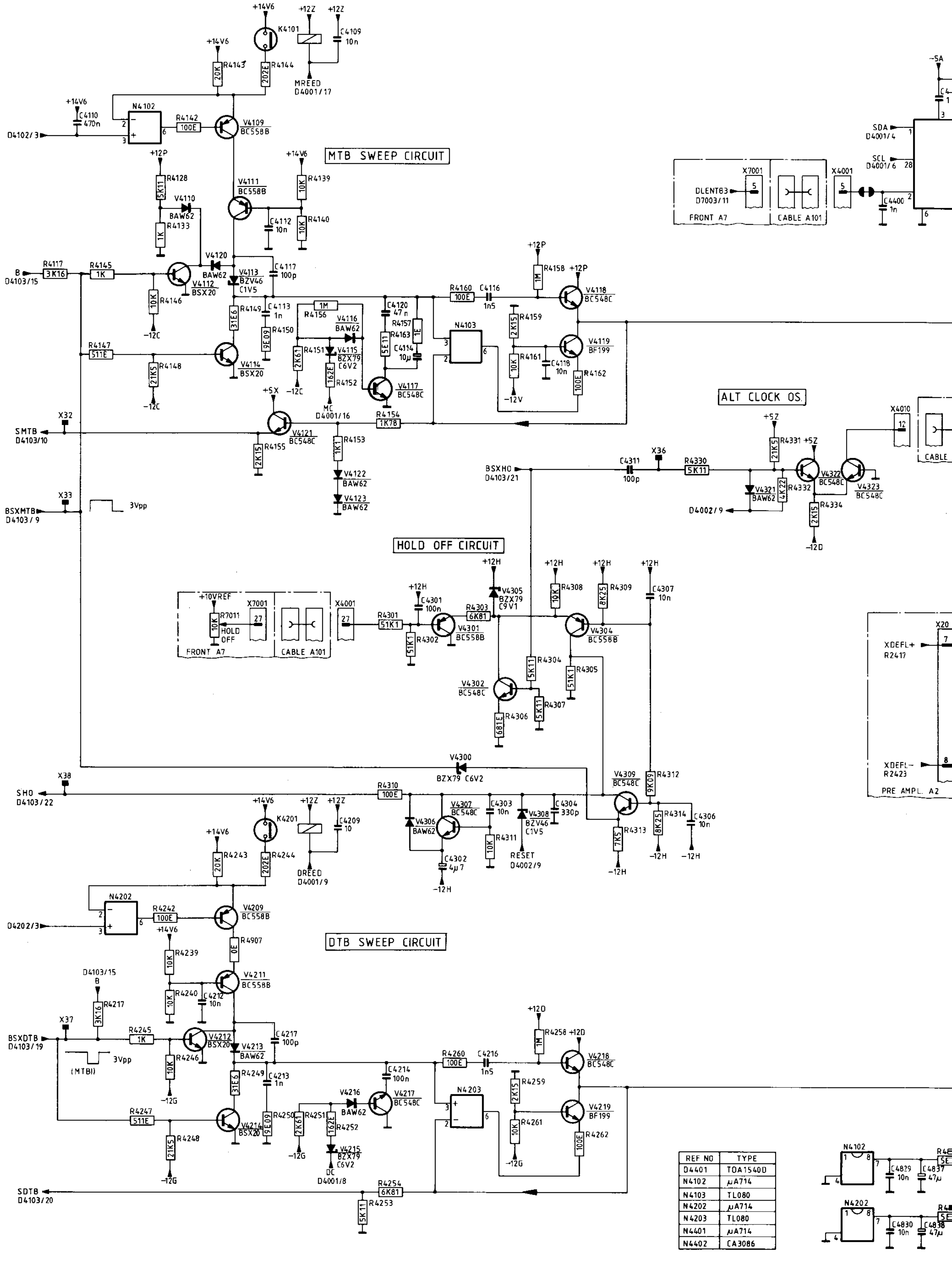
MTB SWEEP CIRCUIT
ALT CLOCK OS.
HOLD OFF CIRCUIT
DTB SWEEP CIRCUIT
+14V6
K4101
+12Z
C4109 10n
R4143 20K
R4144 202E
MREED D4001/17
C4110 470n
N4102
D4102/3
R4142 100E
V4109 BC558B
+12P
R4128 5K11
V4110 BAW62
R4133 1K
V4111 BC558B
C4112 10n
R4139 10K
R4140 10K
B D4103/15
R4117 3K16
R4145 1K
V4112 BSX20
V4120 BAW62
V4113 BZV46 C1V5
C4117 100p
R4146 10K
-12C
R4147 511E
R4148 21K5
V4114 BSX20
R4149 31E6
C4113 1n
R4150 9E09
R4156 1M
V4116 BAW62
R4151 2K61
V4115 BZX79 C6V2
R4152 162E
MC D4001/16
C4120 47n
R4157 1E
R4163 5E11
C4114 10μ
V4117 BC548C
N4103
R4160 100E
C4116 1n5
R4158 1M
V4118 BC548C
R4159 2K15
R4161 10K
C4118 10n
V4119 BF199
R4162 100E
-12V
+5X
V4121 BC548C
R4155 2K15
R4154 1K78
R4153 1K1
V4122 BAW62
V4123 BAW62
X32
SMTB D4103/10
X33
BSXMTB D4103/9
3Vpp
DLENTB3 D7003/11
X7001
FRONT A7
CABLE A101
X4001
SDA D4001/4
SCL D4001/6
C4400 1n
-5A
BSXHO D4103/21
C4311 100p
X36
R4330 5K11
+5Z
R4331 21K5
V4321 BAW62
R4332 4K22
V4322 BC548C
V4323 BC548C
R4334 2K15
D4002/9
-12D
X4010
CABLE
+10VREF
R7011 10K
HOLD OFF
R4301 51K1
R4302 51K1
+12H
C4301 100n
R4303 6K81
V4301 BC558B
V4305 BZX79 C9V1
R4308 10K
R4309 8K25
C4307 10n
V4304 BC558B
R4304 5K11
R4305 51K1
V4302 BC548C
R4306 681E
R4307 5K11
V4300 BZX79 C6V2
X38
SHO D4103/22
R4310 100E
V4307 BC548C
C4303 10n
V4308 BZV46 C1V5
C4304 330p
V4306 BAW62
C4302 4μ7
R4311 10K
RESET D4002/9
V4309 BC548C
R4312 9K09
R4313 7K5
R4314 8K25
C4306 10n
-12H
XDEFL+ R2417
XDEFL- R2423
X20
PRE AMPL. A2
K4201
C4209 10
R4243 20K
R4244 202E
DREED D4001/9
N4202
D4202/3
R4242 100E
V4209 BC558B
R4907 0E
R4239 10K
V4211 BC558B
R4240 10K
C4212 10n
D4103/15 B
R4217 3K16
X37
BSXDTB D4103/19
R4245 1K
V4212 BSX20
V4213 BAW62
C4217 100p
(MTB)
R4246 10K
-12G
R4249 31E6
C4213 1n
R4247 511E
R4248 21K5
V4214 BSX20
R4250 9E09
R4251 2K61
R4252 162E
V4215 BZX79 C6V2
DC D4001/8
V4216 BAW62
V4217 BC548C
C4214 100n
N4203
R4260 100E
C4216 1n5
+12D
R4258 1M
V4218 BC548C
R4259 2K15
R4261 10K
V4219 BF199
R4262 100E
SDTB D4103/20
R4254 6K81
R4253 5K11
N4102
C4829 10n
C4837 47μ
N4202
C4830 10n
C4838 47μ

REF NO	TYPE
D4401	TDA1540D
N4102	μA714
N4103	TL080
N4202	μA714
N4203	TL080
N4401	μA714
N4402	CA3086

Figure 7.9 Circuit diagram of time base, MTB and DTB sweep circuits and final X DEFL amplifier

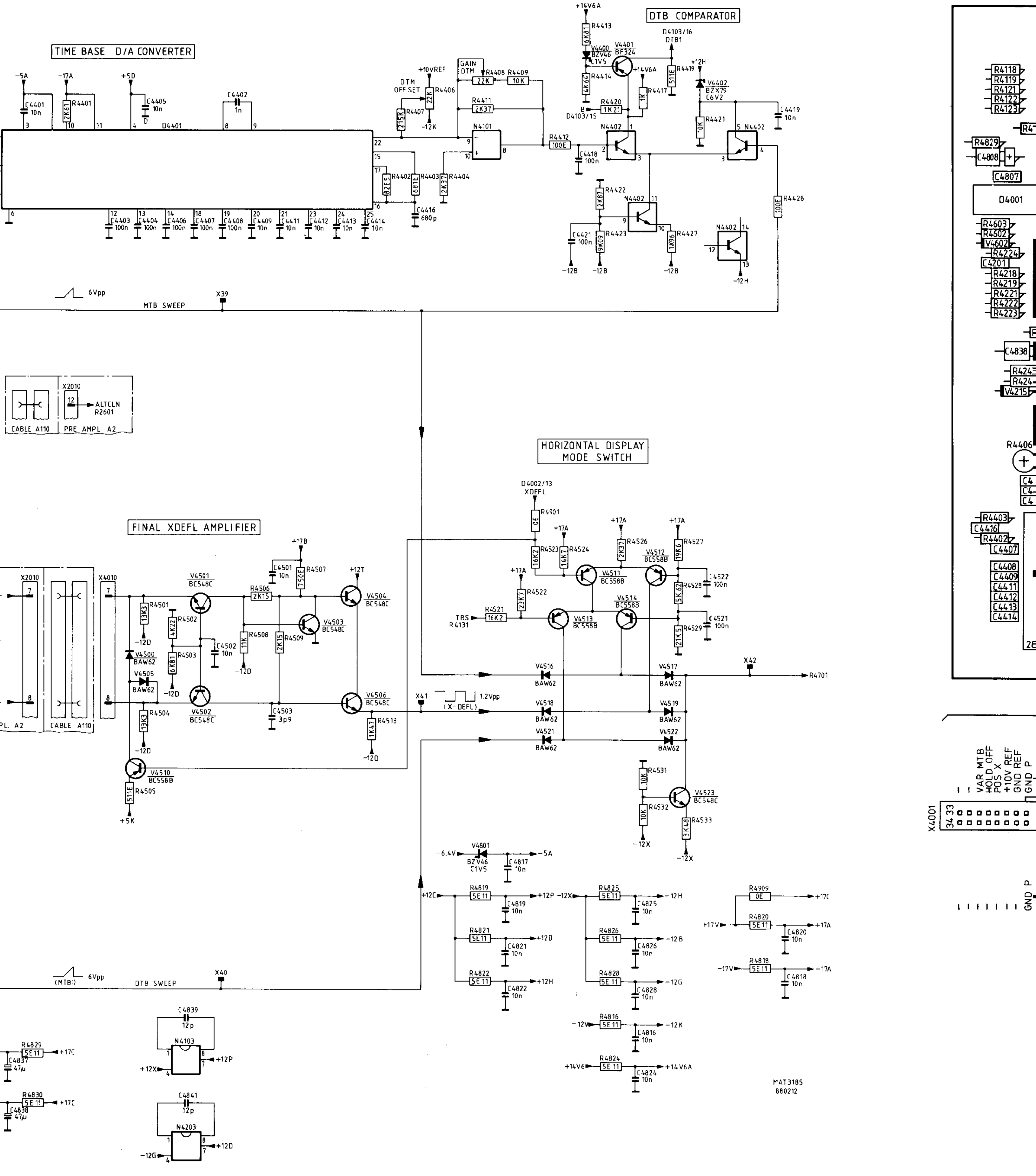
TIME BASE D/A CONVERTER
DTB COMPARATOR
FINAL XDEFL AMPLIFIER
HORIZONTAL DISPLAY MODE SWITCH
D4401
N4101
N4402
GAIN DTM
DTM OFF SET
+10VREF
+14V6A
D4103/16 DTB1
D4103/15
V4400 BZV46 C1V5
V4401 BF324
V4402 BZX79 C6V2
MTB SWEEP
X39
6Vpp
CABLE A110
PRE AMPL A2
X2010
ALTCLN R2601
X4010
V4501 BC548C
V4502 BC548C
V4503 BC548C
V4504 BC548C
V4506 BC548C
V4510 BC558B
V4500 BAW62
V4505 BAW62
D4002/13 XDEFL
V4511 BC558B
V4512 BC558B
V4513 BC558B
V4514 BC558B
V4523 BC548C
TBS R4131
X41
1.2Vpp
(X-DEFL)
X42
R4701
V4516 BAW62
V4517 BAW62
V4518 BAW62
V4519 BAW62
V4521 BAW62
V4522 BAW62
V4801 BZV46 C1V5
DTB SWEEP
(MTB)
X40
N4103
N4203
C4839 12p
C4841 12p
X4001
VAR MTB
HOLD OFF
POS X
+10V REF
GND REF
GND P
D4001
MAT3185
880212

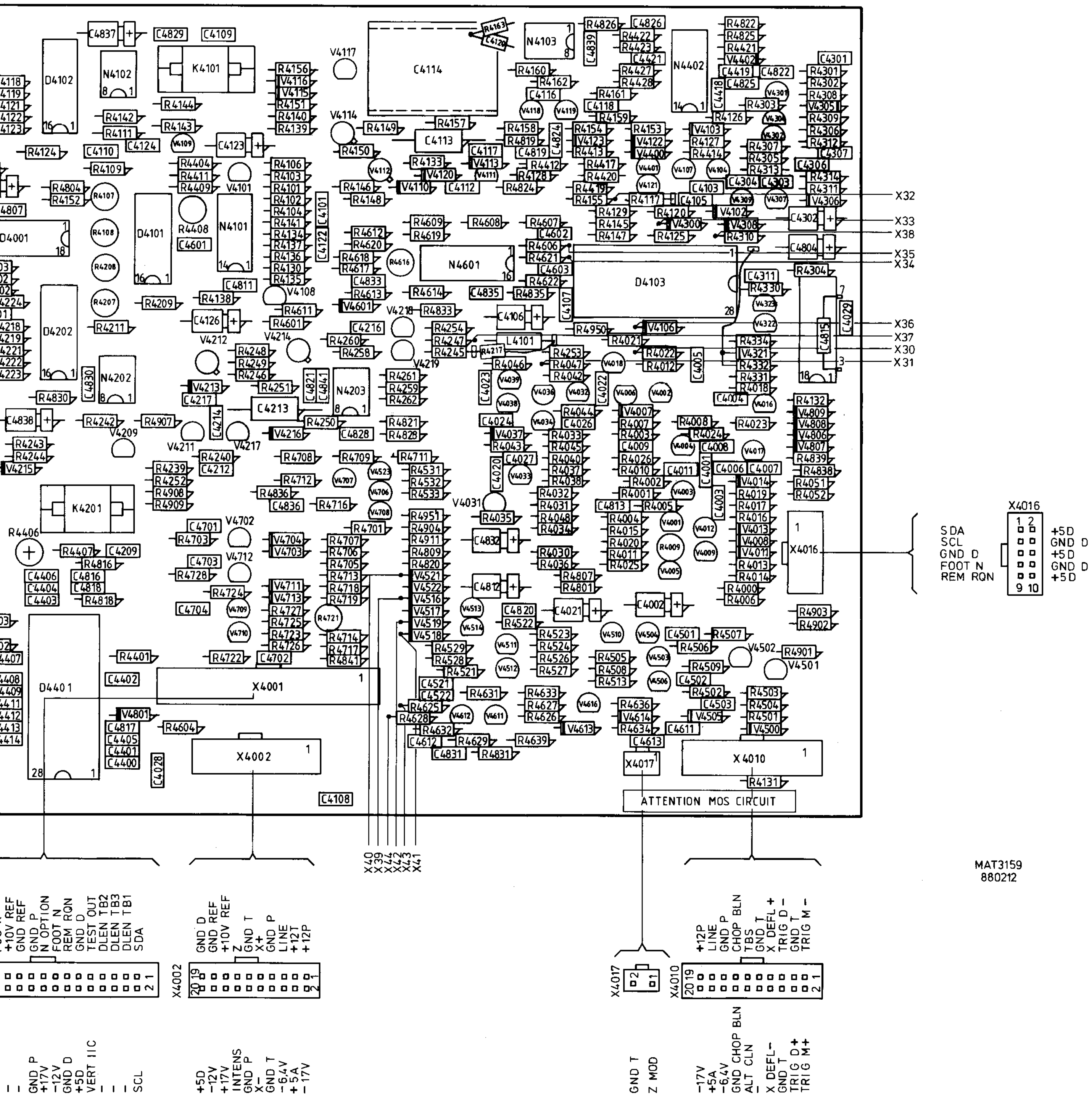
N4103
C4114
N4402
D4102
N4102
K4101
N4101
D4101
D4001
D4202
N4202
N4203
C4213
N4601
D4103
K4201
R4406
D4401
X4001
X4002
X4010
X4017
X4016
ATTENTION MOS CIRCUIT
X32
X33
X38
X35
X34
X36
X37
X30
X31
X40
X39
X44
X42
X43
X41
SDA
SCL
GND D
FOOT N
REM RQN
+5D
GND D
+5D
GND D
+5D
+10V REF
GND REF
GND P
N OPTION
FOOT N
REM RQN
GND D
TEST OUT
DLEN TB2
DLEN TB3
DLEN TB1
SDA
GND P
+17V
-12V
GND D
+5D
VERT IIC
SCL
GND D
GND REF
+10V REF
Z
GND T
X+
GND P
LINE
+12T
+12P
+5D
-12V
+17V
INTENS
GND P
X-
GND T
-6,4V
+5A
-17V
GND T
Z MOD
+12P
LINE
GND P
CHOP BLN
TBS
GND T
X DEFL +
TRIG D -
GND T
TRIG M -
-17V
+5A
-6,4V
GND CHOP BLN
ALT CLN
X DEFL-
GND T
TRIG D+
TRIG M+
MAT3159
880212

Figure 7.10 Time base unit p.c.b.

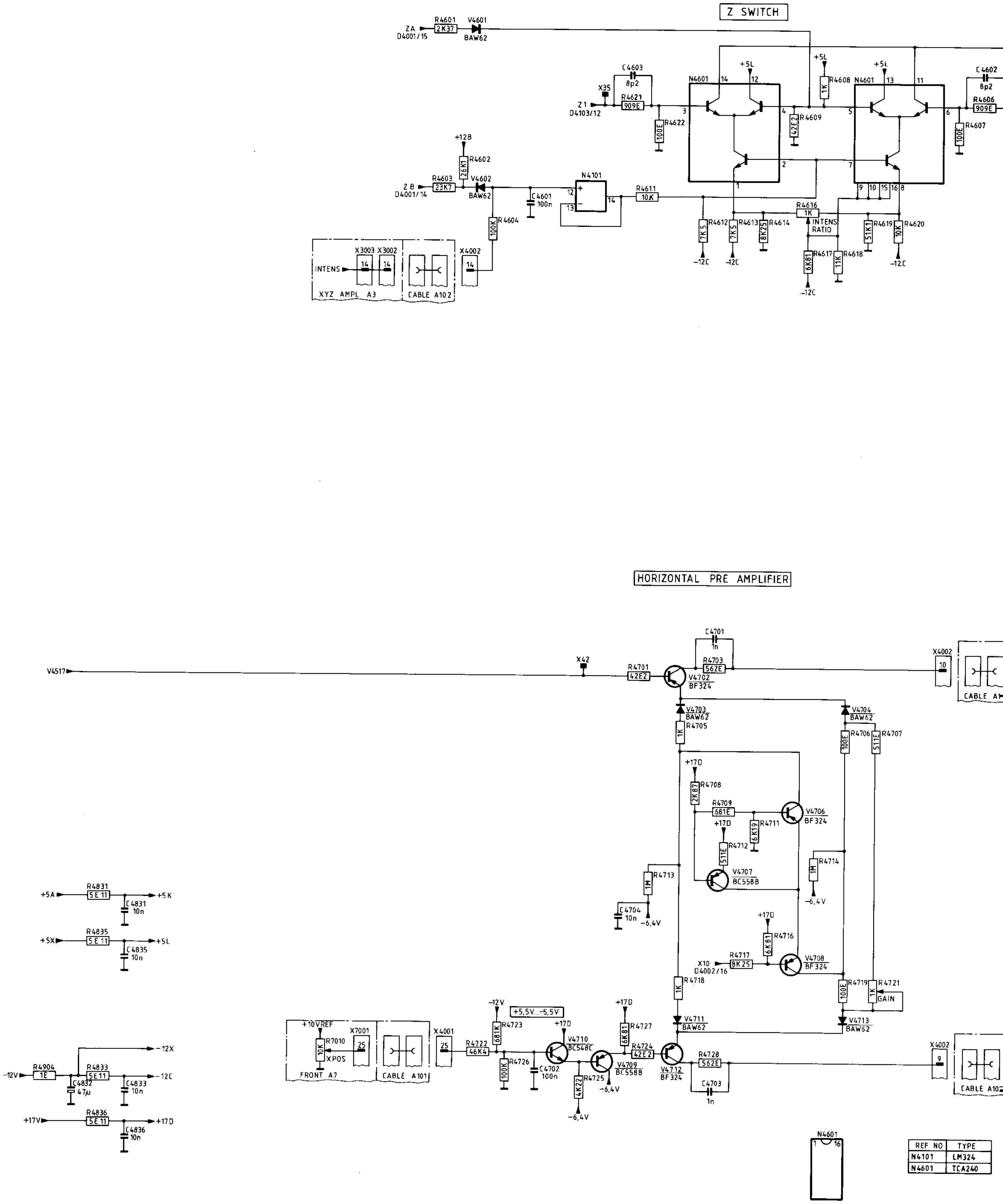
Z SWITCH
ZA
D4001/15
R4601
2K37
V4601
BAW62
C4603
8p2
X35
Z1
D4103/12
R4621
909E
100E
R4622
N4601
+5L
14
12
3
4
42E2
R4609
R4608
1K
5
13
11
6
C4602
8p2
R4606
909E
100E
R4607
2
7
1
9
10
15
16
8
+12B
R4602
26K1
ZB
D4001/14
R4603
23K7
V4602
BAW62
C4601
100n
N4101
R4611
10K
R4604
100K
R4612
7K5
R4613
7K5
R4614
8K25
R4616
1K
INTENS RATIO
R4617
6K81
R4618
11K
R4619
51K1
R4620
10K
-12C
X3003
X3002
X4002
INTENS
XYZ AMPL A3
CABLE A102
HORIZONTAL PRE AMPLIFIER
V4517
X42
R4701
42E2
C4701
1n
R4703
562E
V4702
BF324
X4002
10
CABLE A1
V4703
BAW62
R4705
1K
V4704
BAW62
R4706
100E
R4707
511E
+17D
R4708
2K87
R4709
681E
R4711
6K19
V4706
BF324
R4712
511E
V4707
BC558B
R4713
1M
C4704
10n
-6,4V
R4714
1M
R4716
6K81
R4717
8K25
X10
D4002/16
V4708
BF324
R4718
1K
R4719
100E
R4721
1K
GAIN
V4711
BAW62
V4713
BAW62
-12V
+5,5V...-5,5V
R4723
681K
+10VREF
R7010
10K
XPOS
X7001
25
FRONT A7
CABLE A101
X4001
R4722
46K4
R4726
100K
C4702
100n
V4710
BC548C
R4725
4K22
R4727
6K81
V4709
BC558B
R4724
42E2
V4712
BF324
R4728
562E
C4703
1n
9
CABLE A10
R4831
5E11
+5A
+5K
C4831
10n
R4835
5E11
+5X
+5L
C4835
10n
-12X
-12V
R4904
1E
R4833
5E11
-12C
C4832
47µ
C4833
10n
+17V
R4836
5E11
+17D
C4836
10n
N4601
1
16

REF NO	TYPE
N4101	LM324
N4601	TCA240

Figure 7.11 Circuit diagram of time-base, pre-amplifier and Z switch

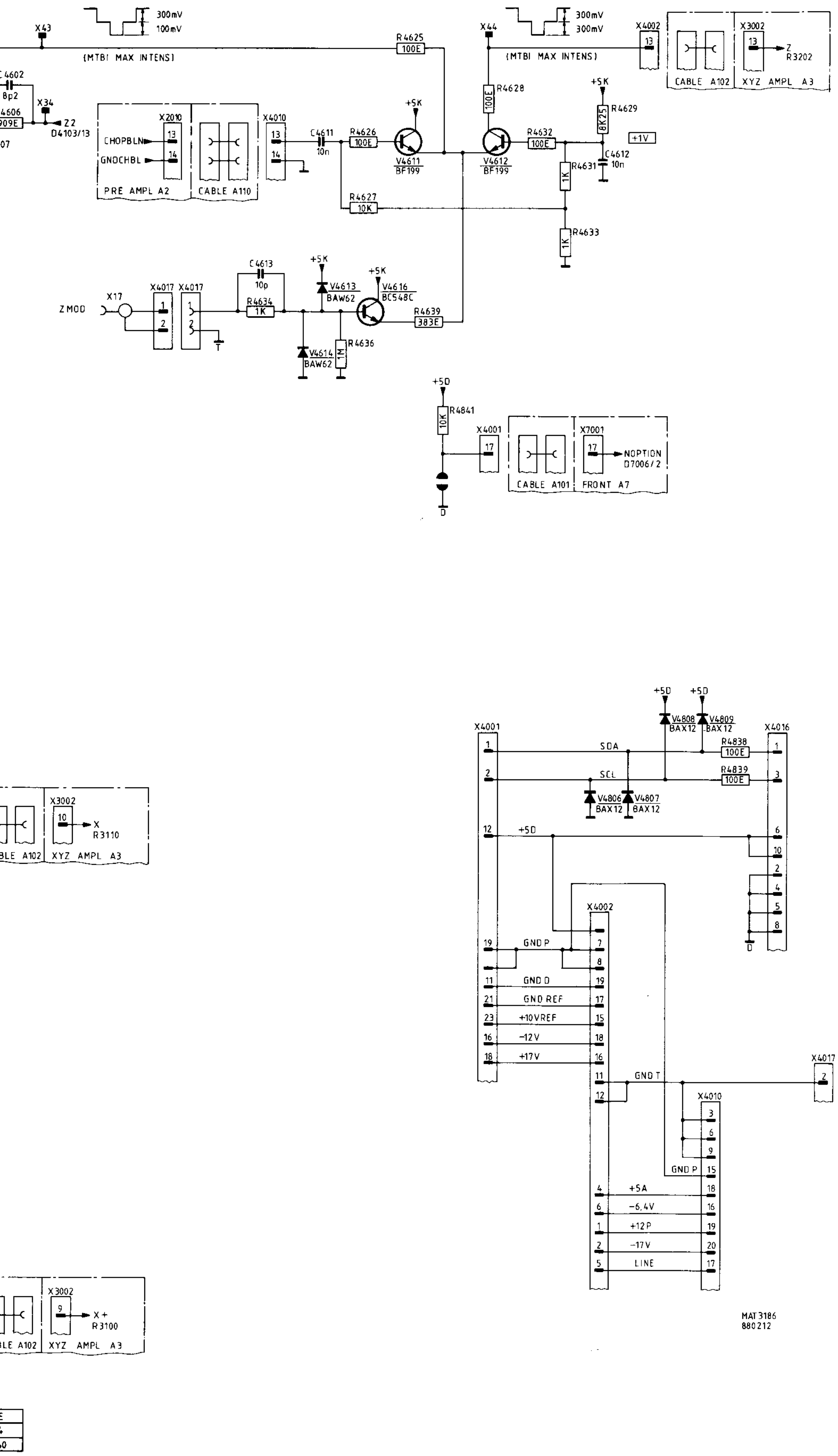
300mV
100mV
X43
(MTBI MAX INTENS)
R4625
100E
C4602
8p2
X34
4606
909E
Z2
D4103/13
X2010
CHOPBLN
GNDCHBL
13
14
PRE AMPL A2
CABLE A110
X4010
C4611
10n
R4626
100E
+5K
V4611
BF199
X44
300mV
300mV
(MTBI MAX INTENS)
R4628
100E
V4612
BF199
R4632
100E
+5K
R4629
8K25
+1V
C4612
10n
R4631
1K
R4627
10K
R4633
1K
X4002
13
CABLE A102
X3002
13
Z
R3202
XYZ AMPL A3
ZMOD
X17
X4017
X4017
1
2
C4613
10p
R4634
1K
+5K
V4613
BAW62
+5K
V4616
BC548C
R4639
383E
V4614
BAW62
R4636
1M
+5D
R4841
10K
X4001
17
D
CABLE A101
X7001
17
NOPTION
D7006/2
FRONT A7
X3002
10
X
R3110
BLE A102
XYZ AMPL A3
+5D
+5D
V4808
BAX12
V4809
BAX12
X4001
X4016
SDA
R4838
100E
SCL
R4839
100E
V4806
BAX12
V4807
BAX12
+5D
1
2
12
1
3
6
10
2
4
5
8
D
X4002
19
GND P
7
8
11
GND D
19
21
GND REF
17
23
+10VREF
15
16
-12V
18
18
+17V
16
11
GND T
12
X4017
2
X4010
3
6
9
GND P
15
4
+5A
18
6
-6,4V
16
1
+12P
19
2
-17V
20
5
LINE
17
X3002
9
X+
R3100
LE A102
XYZ AMPL A3
MAT 3186
880212

8. CRT CONTROL UNIT (A5)

This unit incorporates the potentiometers that control the CRT functions. These potentiometers are INTENS (R1), screwdriver operated control TRACE ROT (R2), FOCUS (R3) and ILLUM (R4).
The range of these potentiometers is between 0 V and +10 V.
The way these potentiometers influences the associated circuit is described together with the description of the relevant circuit part.

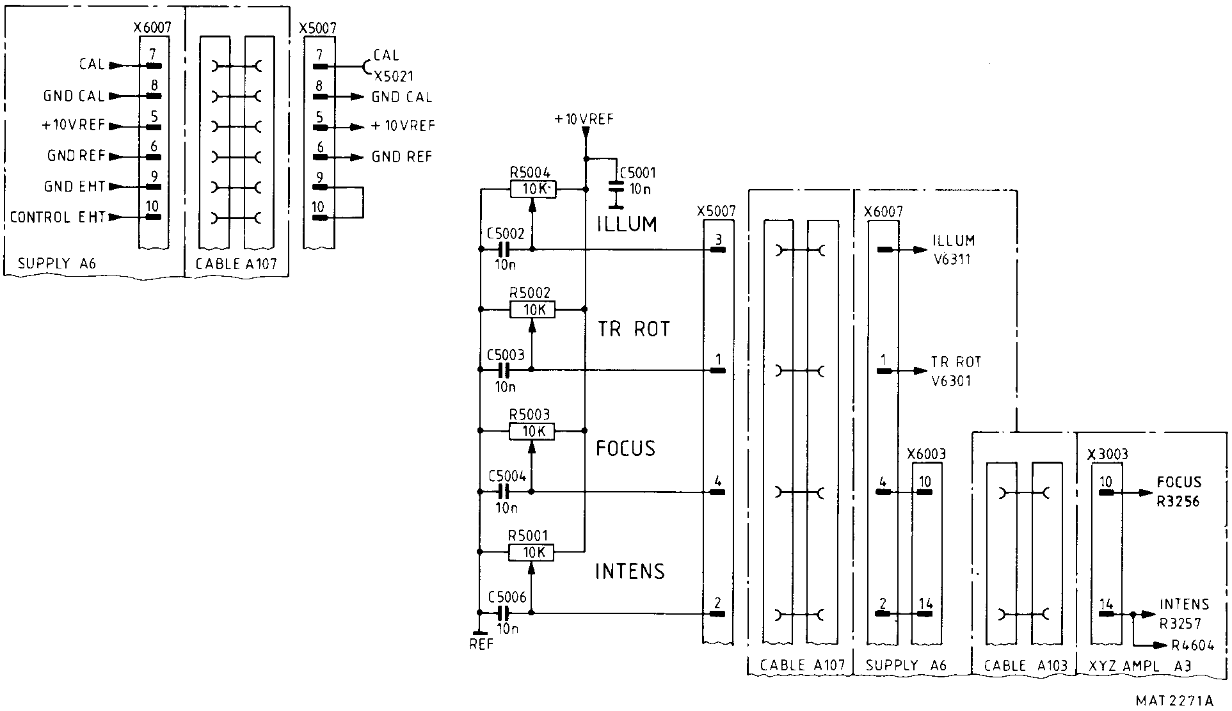
X6007
CAL
GND CAL
+10VREF
GND REF
GND EHT
CONTROL EHT
7
8
5
6
9
10
SUPPLY A6
CABLE A107
X5007
CAL
X5021
GND CAL
+10VREF
GND REF
+10VREF
R5004
10K
C5001
10n
C5002
10n
ILLUM
R5002
10K
TR ROT
C5003
10n
R5003
10K
FOCUS
C5004
10n
R5001
10K
INTENS
C5006
10n
REF
X5007
3
1
4
2
X6007
ILLUM
V6311
TR ROT
V6301
X6003
10
14
X3003
FOCUS
R3256
INTENS
R3257
R4604
CABLE A107
SUPPLY A6
CABLE A103
XYZ AMPL A3
MAT2271A

Figure 8.1 Circuit diagram of CRT control

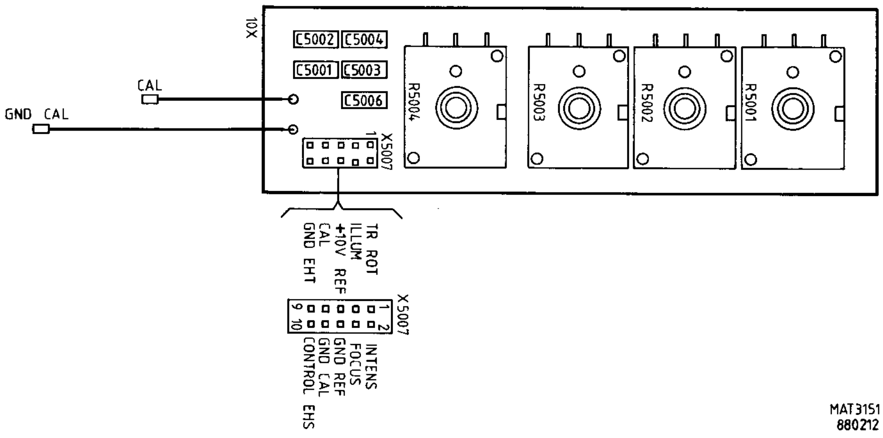
X01
C5002
C5004
C5001
C5003
C5006
CAL
GND CAL
X5007
R5004
R5003
R5002
R5001
TR ROT
ILLUM
+10V REF
CAL
GND EHT
X5007
1
2
9
10
INTENS
FOCUS
GND REF
GND CAL
CONTROL EHS
MAT3151
880212

Figure 8.2 CRT control unit p.c.b.

9. POWER SUPPLY UNIT (A6)

Basically, the power supply unit consists of:

- input circuit
- converter circuit
- secondary output rectifiers
- HT supply
- CAL oscillator
- CRT control circuit

9.1 INPUT CIRCUIT

The instrument may be powered from a nominal mains voltage of 100 V...240 V a.c.
The mains voltage is primary protected by a fuse of 1,6 AT, which is located on the rear of the instrument.

After rectification by the diode bridge V6001...V6004 a d.c. voltage is applied to the converter circuit.
This voltage is smoothed by capacitors C6007, C6008 and chokes L6000, L6001 and L6002.
Depending on the mains voltage, the rectified voltage is 120 V...370 V.

WARNING: All measurements on the INPUT CIRCUIT and the CONVERTER CIRCUIT should be done with a floating oscilloscope.
As reference voltage can be used measure point X48.

A fixed part of the mains voltage serves as a LINE-trigger signal.
The amplitude of the LINE trigger signal is 1/22x MAINS.

NOTE: The LINE trigger signal is not present when a d.c. voltage serves as MAINS.

9.2 CONVERTER CIRCUIT (see figure 9.1 and figure 9.2)

The flyback converters consists of transistor V6014 and V6018 and their associated components. The converter frequency depends on the LINE IN amplitude and is for 110 Vac: 30 kHz approx and for 220 Vac: 45 kHz approx.

Transistors V6014 and T6018 conduct on the forward stroke and charge transformer T6001. The thyristor V6013 fires when the voltage on the gate reaches the firing level (0,6 V approx). Consequently, V6018 blocks - V6014 blocks, for the duration of the flyback stroke, during which the secondary windings discharge via the diode rectifiers into the smoothing capacitors. The NTC resistor R6009 provides temperature compensation for the firing point of the thyristor.

During the flyback, capacitor C6009 charges again via the path T6001-1, V6012, V6009, R6004, C6009, L6002 and T6001-2.

The voltage stabilizer with transistor V6009 gives a square-wave to the gate of transistor V6014 with a maximum amplitude of 15 V.

The dv/dt limiter with L6004, L6006, V6017 and V6019 serves to eliminate the switching spikes present on the collector of V6018 (measuring point X46).

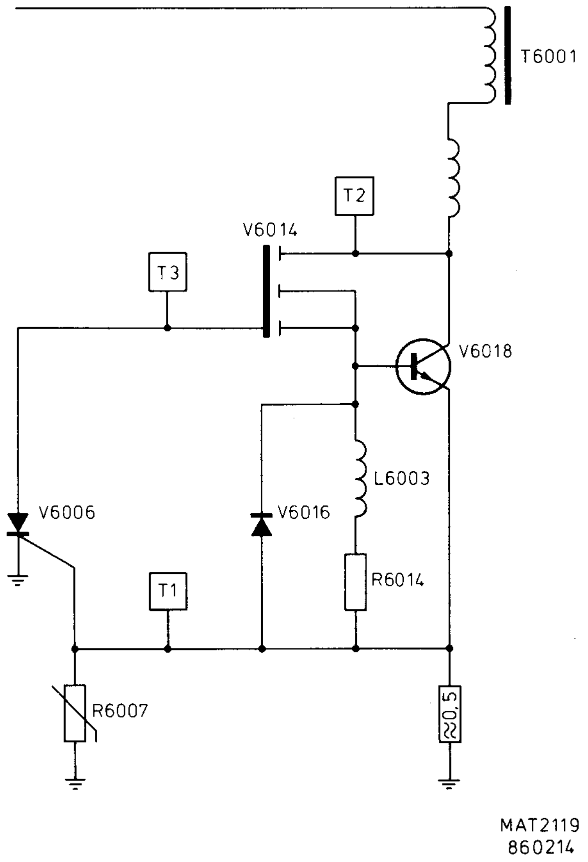
T6001
T2
V6014
T3
V6018
L6003
V6006
V6016
R6014
T1
R6007
≈0,5
MAT2119
860214

Figure 9.1 Converter circuit

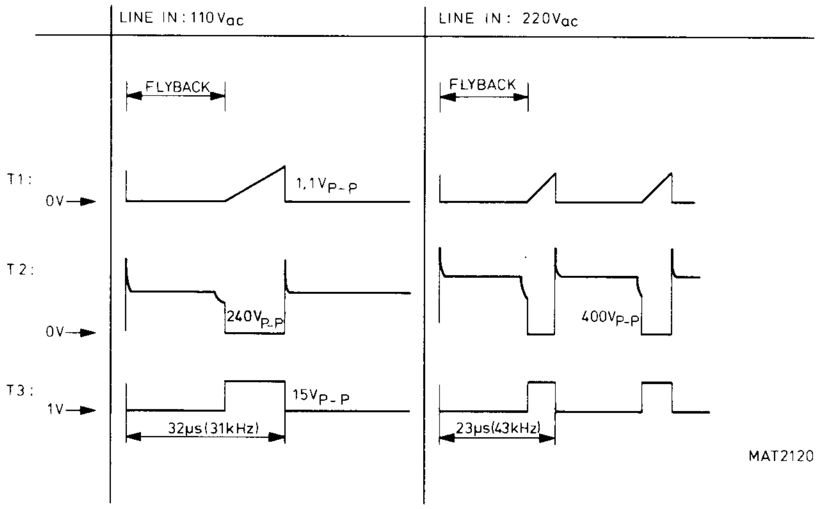

Figure 9.2 Timing diagram converter circuit

9.3 SECONDARY OUTPUT RECTIFIERS

The output voltages taken from the secondary windings of transformer T6001 are rectified by diodes and smoothed by capacitors in conventional circuits.
A "CROWBAR" circuit with transistor V6137 and V6112 protects the +5 V supply.
When the +5 V level is too high, transistor V6137 (and V6112) conduct and the power supply goes into short circuit mode.

A voltage protection circuit using V6134, V6136 and V6112 protects against overloads protection. When the power supply is overloaded, these components conduct and the power supply goes into in the short-circuit mode.

9.4 HT SUPPLY

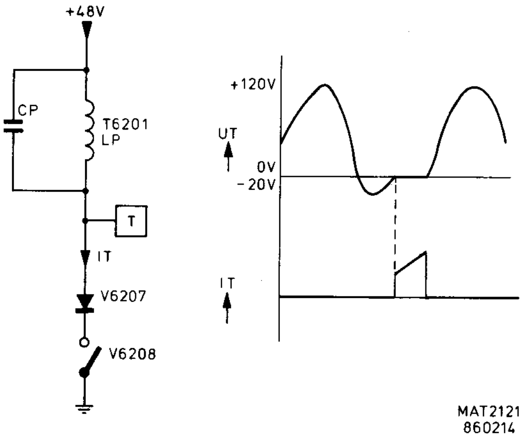

Figure 9.3 HT oscillator

The HT supply consists of an oscillator and a regulator circuit. Transformer T6201 determines the frequency (50 kHz approx.) of the oscillator. The output signal voltage on the secondary winding of T6201 is rectified by diode V6209 and smoothed by C6211. The -2,1 kV is also converted to -14,5 kV in the HT multiplier D6201 and routed via connector X6030 to the post-acceleration anode of the CRT.

To regulate this HT voltage the -2 kV is fed to the input of OP-AMP N6002.
The output level of N6002 determines the energy to T6201, and thus the amplitude of the HT-voltage.

9.5 CALIBRATOR

The calibrator circuit consists of two analogue switches D6501(8-9) and D6501(11-12) controlled by the active HIGH enable inputs 6 and 12 respectively, that are connected as an 2 kHz astable oscillator. Capacitor C6502 and resistor R6504 determine the 2 kHz frequency. The oscillator outputs, applied to enable inputs 5 and 13 of the second stage are in anti-phase with each other. Depending on the level of input 5 and 13, the CAL voltage will have a 1,2 V level or a 0 V level.

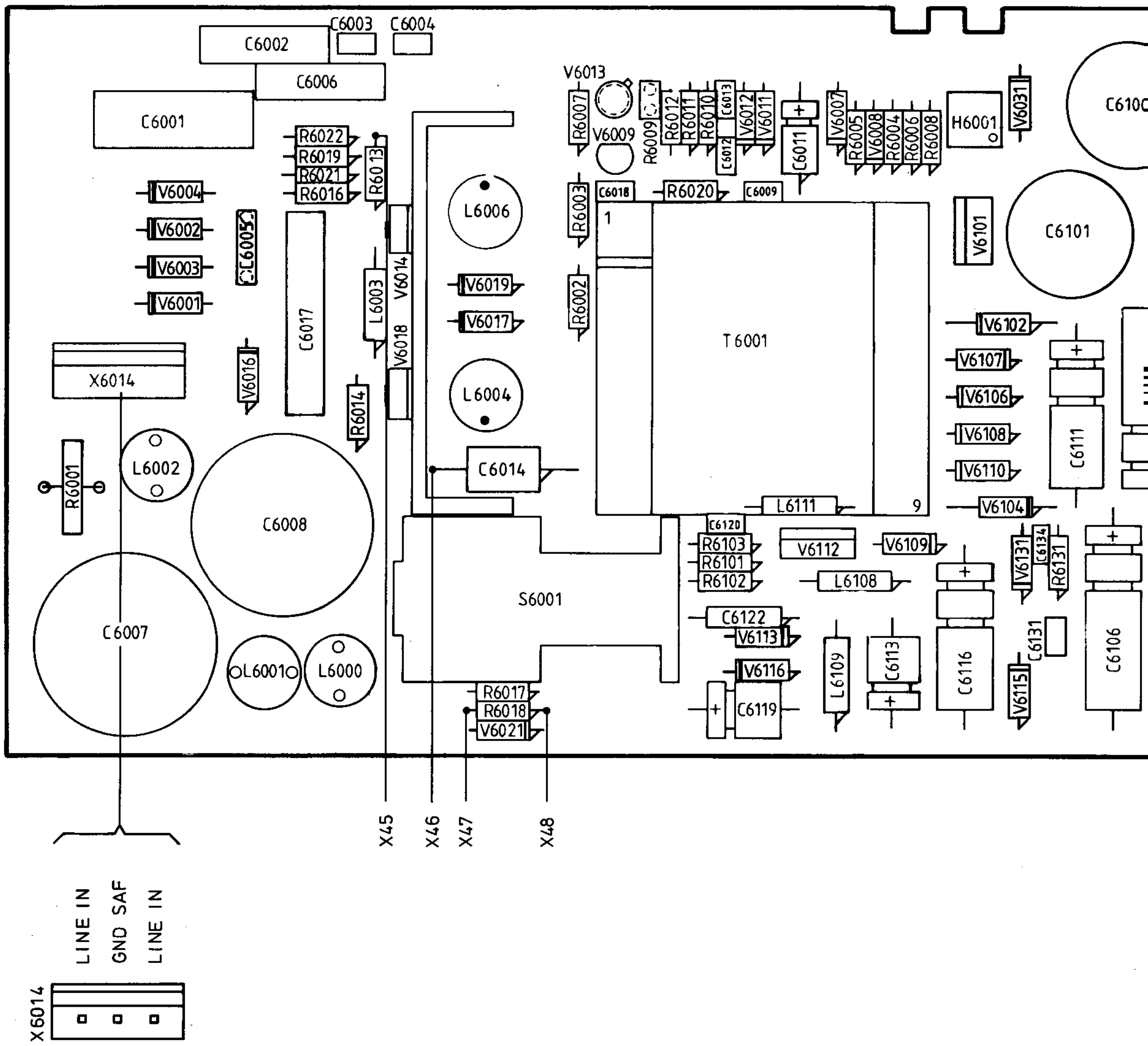
C6002
C6003
C6004
C6006
C6001
V6013
R6007
V6009
R6009
R6012
R6011
R6010
C6013
C6012
V6012
V6011
C6011
V6007
R6005
V6008
R6004
R6006
R6008
H6001
V6031
C610
R6022
R6019
R6021
R6016
R6013
V6004
V6002
V6003
V6001
C6005
C6017
L6003
V6014
V6018
L6006
V6019
V6017
R6003
R6002
C6018
R6020
C6009
1
T 6001
V6101
C6101
V6102
V6107
V6106
V6108
V6110
V6104
C6111
X6014
V6016
R6014
L6004
R6001
L6002
C6008
C6014
L6111
9
C6120
R6103
R6101
R6102
V6112
V6109
L6108
V6131
C6134
R6131
S6001
C6007
C6122
V6113
V6116
L6109
C6113
C6116
C6131
V6115
C6106
L6001
L6000
R6017
R6018
V6021
C6119
X45
X46
X47
X48
LINE IN
GND SAF
LINE IN
X6014

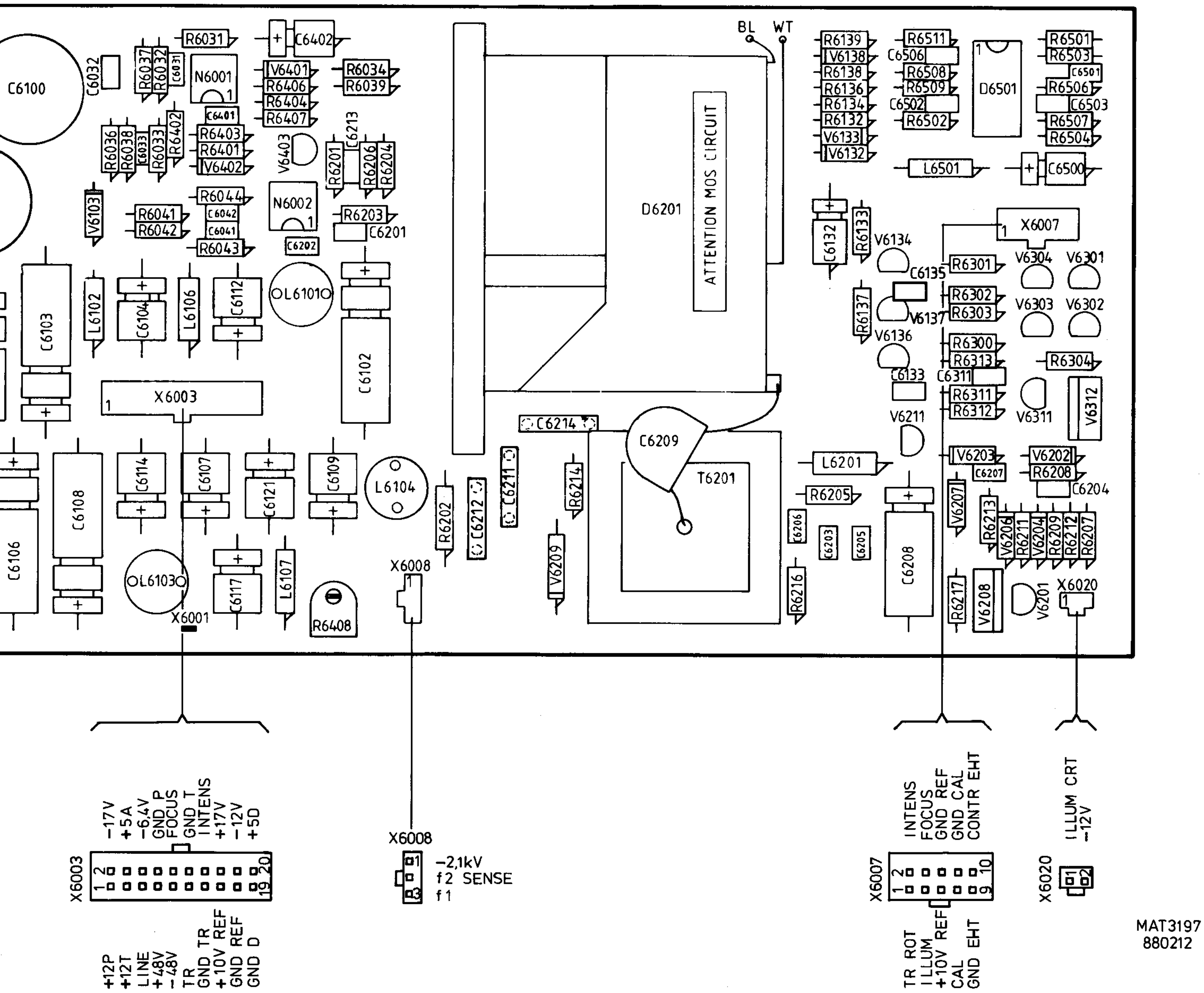
ATTENTION MOS CIRCUIT
D6201
T6201
C6209
C6100
N6001
N6002
D6501
X6003
X6007
X6008
X6020
X6001
BL
WT
L6101
L6103
L6104
L6201
L6501
R6408
X6003
-17V
+5A
-6,4V
GND P
FOCUS
GND T
INTENS
+17V
-12V
+5D
1 2
19 20
+12P
+12T
LINE
+48V
-48V
TR
GND TR
+10V REF
GND REF
GND D
X6008
-2,1kV
f2 SENSE
f1
X6007
INTENS
FOCUS
GND REF
GND CAL
CONTR EHT
1 2
9 10
TR ROT
ILLUM
+10V REF
CAL
GND EHT
X6020
ILLUM CRT
-12V
1 2
MAT3197
880212

Figure 9.4 Power supply unit p.c.b.

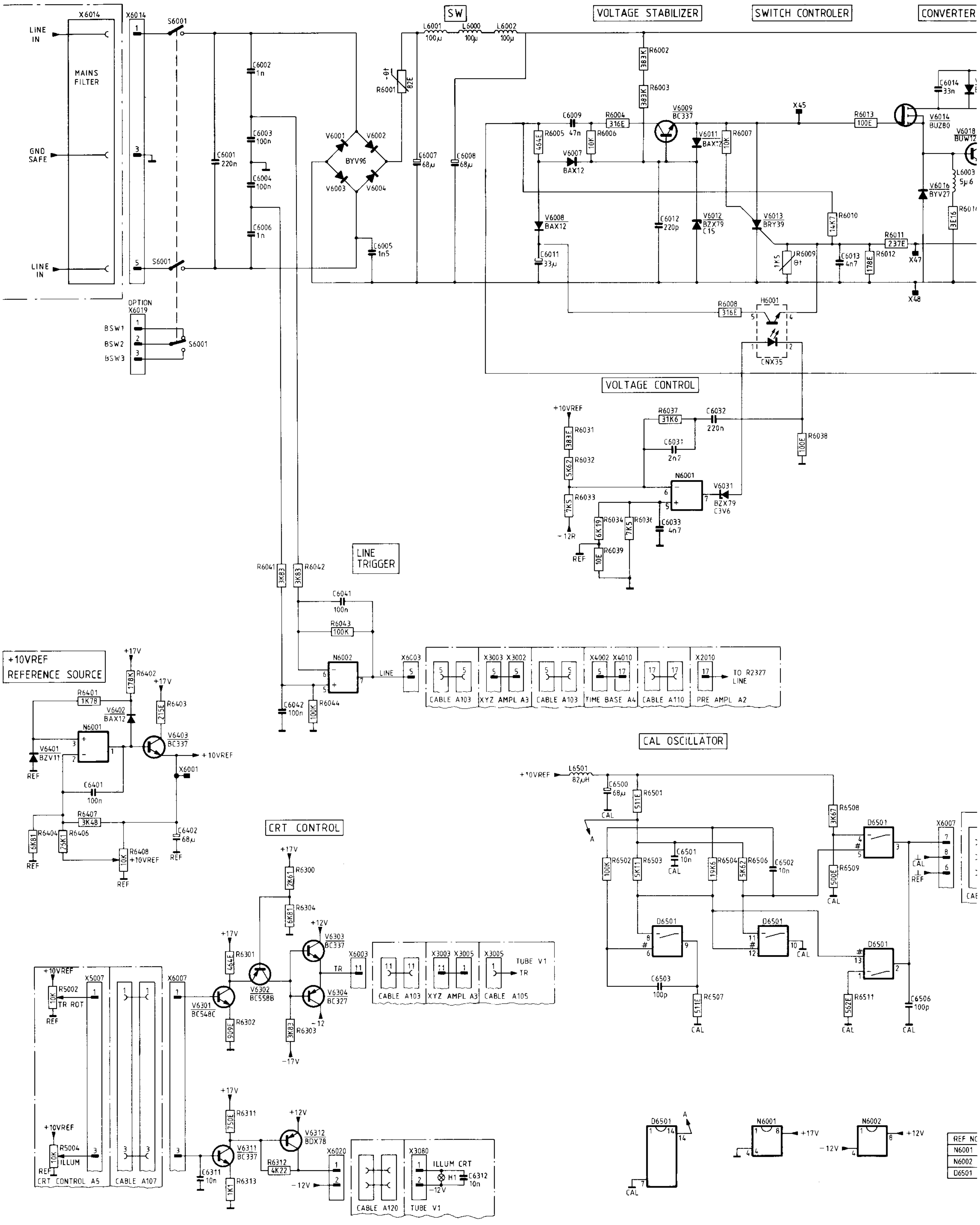
SW
VOLTAGE STABILIZER
SWITCH CONTROLER
CONVERTER
LINE IN
GND SAFE
LINE IN
MAINS FILTER
X6014
S6001
OPTION X6019
BSW1
BSW2
BSW3
C6001 220n
C6002 1n
C6003 100n
C6004 100n
C6006 1n
C6005 1n5
L6001 100µ
L6000 100µ
L6002 100µ
R6001 82E
V6001
V6002
V6003
V6004
BYV95
C6007 68µ
C6008 68µ
R6002 383K
R6003 383K
C6009 47n
R6004 316E
R6005 464E
R6006 10K
V6007 BAX12
V6009 BC337
V6011 BAX12
R6007 10K
X45
R6013 100E
V6014 BUZ80
V6018 BUW12
C6014 33n
L6003 5µ6
V6016 BYV27
R6014 3E16
V6008 BAX12
C6011 33µ
C6012 220p
V6012 BZX79 C15
V6013 BRY39
R6010 14K7
R6009 1K5
C6013 4n7
R6012 178E
R6011 237E
X47
X48
R6008 316E
H6001
CNX35
VOLTAGE CONTROL
+10VREF
R6031 383E
R6032 5K62
R6033 7K5
-12R
R6034 6K19
R6036 7K5
R6039 10E
REF
R6037 31K6
C6032 220n
C6031 2n2
N6001
V6031 BZX79 C3V6
C6033 4n7
R6038 100E
LINE TRIGGER
R6041 3K83
R6042 3K83
C6041 100n
R6043 100K
N6002
C6042 100n
R6044 100K
LINE
X6003
CABLE A103
X3003 X3002
XYZ AMPL A3
CABLE A103
X4002 X4010
TIME BASE A4
CABLE A110
X2010
PRE AMPL A2
TO R2327 LINE
+10VREF REFERENCE SOURCE
+17V
R6402 178K
R6401 1K78
V6402 BAX12
R6403 215E
V6403 BC337
+10VREF
X6001
V6401 BZV11
C6401 100n
R6407 3K48
C6402 68µ
R6404 6K81
R6406 75K1
R6408 10K
CAL OSCILLATOR
L6501 82µH
C6500 68µ
CAL
R6501 511E
R6508 3K67
D6501
X6007
R6502 100K
R6503 5K11
C6501 10n
R6504 19K6
R6506 5K62
C6502 10n
R6509 500E
C6503 100p
R6507 511E
R6511 562E
C6506 100p
CRT CONTROL
R6300 2K61
R6304 6K81
R6301 464E
V6302 BC558B
V6303 BC337
V6304 BC327
V6301 BC548C
R6302 909E
R6303 3K83
-17V
-12
TR
TUBE V1
CABLE A105
X3005
CRT CONTROL A5
X5007
R5002 10K TR ROT
CABLE A107
R5004 10K ILLUM
R6311 750E
V6312 BDX78
V6311 BC337
R6312 4K22
C6311 10n
R6313 1K1
X6020
CABLE A120
X3080
ILLUM CRT
H1
C6312 10n
-12V
+12V
+17V
REF NO
N6001
N6002
D6501

Figure 9.5 Circuit diagram of power supply

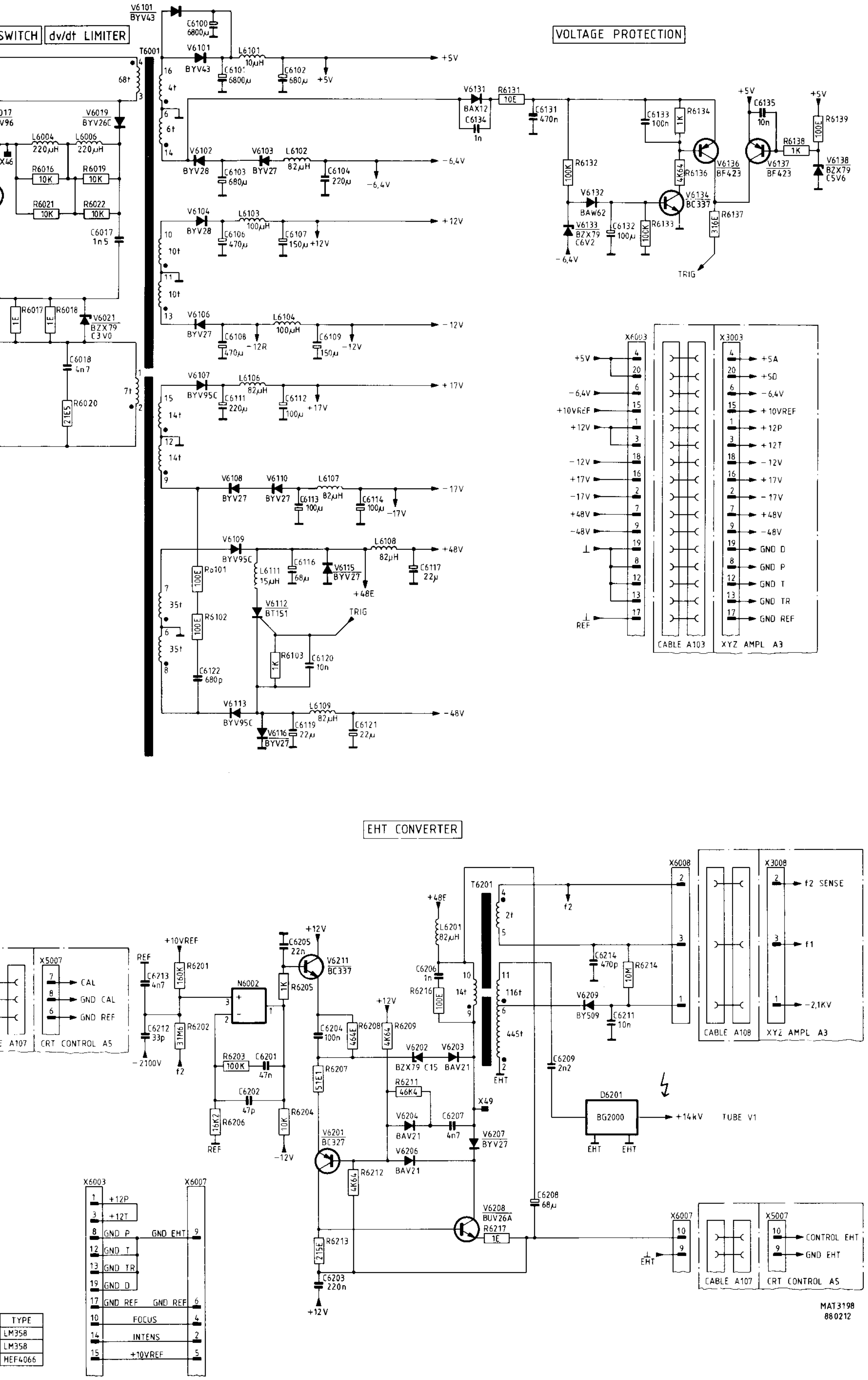
SWITCH
dv/dt LIMITER
VOLTAGE PROTECTION
EHT CONVERTER
T6001
V6101 BYV43
C6100 6800µ
L6101 10µH
C6101 6800µ
C6102 680µ
+5V
V6131 BAX12
R6131 10E
C6134 1n
C6131 470n
C6133 100n
R6134 1K
R6132 100K
V6132 BAW62
V6133 BZX79 C6V2
C6132 100µ
R6133 100K
V6134 BC337
R6136 4K64
V6136 BF423
V6137 BF423
C6135 10n
R6138 1K
R6139 100E
V6138 BZX79 C5V6
R6137 316E
TRIG
V6019 BYV26C
L6004 220µH
L6006 220µH
R6016 10K
R6019 10K
R6021 10K
R6022 10K
C6017 1n5
R6017 1E
R6018 1E
V6021 BZX79 C3V0
C6018 4n7
R6020 21E5
V6102 BYV28
V6103 BYV27
L6102 82µH
C6103 680µ
C6104 220µ
−6,4V
V6104 BYV28
L6103 100µH
C6106 470µ
C6107 150µ
+12V
V6106 BYV27
L6104 100µH
C6108 470µ
C6109 150µ
−12V
V6107 BYV95C
L6106 82µH
C6111 220µ
C6112 100µ
+17V
V6108 BYV27
V6110 BYV27
L6107 82µH
C6113 100µ
C6114 100µ
−17V
V6109 BYV95C
C6116 68µ
V6115 BYV27
L6108 82µH
C6117 22µ
+48V
+48E
R6101 100E
R6102 100E
L6111 15µH
V6112 BT151
R6103 1K
C6120 10n
C6122 680p
V6113 BYV95C
V6116 BYV27
C6119 22µ
L6109 82µH
C6121 22µ
−48V
X6003
X3003
CABLE A103
XYZ AMPL A3
+5A
+5D
+10VREF
+12P
+12T
GND D
GND P
GND T
GND TR
GND REF
REF
T6201
+48E
L6201 82µH
C6206 1n
R6216 100E
f2
C6214 470p
R6214 10M
V6209 BY509
C6211 10n
C6209 2n2
D6201 BG2000
+14kV
TUBE V1
EHT
X6008
X3008
f2 SENSE
f1
−2,1KV
CABLE A108
+10VREF
R6201 160K
C6713 4n7
C6212 33p
R6202 31M6
−2100V
N6002
R6203 100K
C6201 47n
C6202 47p
R6206 16K2
R6204 10K
−12V
C6205 22n
V6211 BC337
R6205 1K
C6204 100n
R6208 464E
R6209 4K64
V6202 BZX79 C15
V6203 BAV21
R6207 51E1
R6211 46K4
V6204 BAV21
C6207 4n7
X49
V6207 BYV27
V6201 BC327
V6206 BAV21
R6212 4K64
V6208 BUV26A
R6217 1E
C6208 68µ
R6213 215E
C6203 220n
X6007
X5007
CONTROL EHT
GND EHT
CABLE A107
CRT CONTROL A5
CAL
GND CAL
GND REF
FOCUS
INTENS
TYPE
LM358
LM358
HEF4066
MAT3198
880212

10. FRONT UNIT (A7-A8)

The front unit consists of:

- the microcomputer control circuit
- the LCD display circuit
- the front panel controls

10.1 MICROCOMPUTER CONTROL CIRCUIT

10.1.1 Introduction to MAB8052 microcomputer

The integrated circuit MAB8052, one of the MSC-51 family of single chip microcomputers, forms the basis of the microcomputer system of the oscilloscope. The MAB8052 has an internal 8 k ROM and 256 bytes RAM with address/data decoding facilities. In addition to this, the 8052 has 32 I/O lines. Data written to these lines remains unchanged until rewritten. Each line is able to serve as input or output, or both, even though outputs are statically latched. To provide specific serial data transfer possibilities, the microcomputer system contains an I^2C bus interface.

10.1.2 Characteristics of the I^2C bus

The I^2C bus is for 2-way, 3-line communication between different ICs or modules. The three lines are a serial data line (SDA), a serial clock line (SCL) and ground. Both lines must be connected to a positive supply via a pull-up resistor when connected to the output stages of a device. Data transfer may be initiated only when the bus is not busy.

Bit transfer:

One data bit is transferred during each clock pulse. The data on the SDA line must remain stable during the HIGH period of the clock pulse as changes in the data line at this time will be interpreted as control signals.

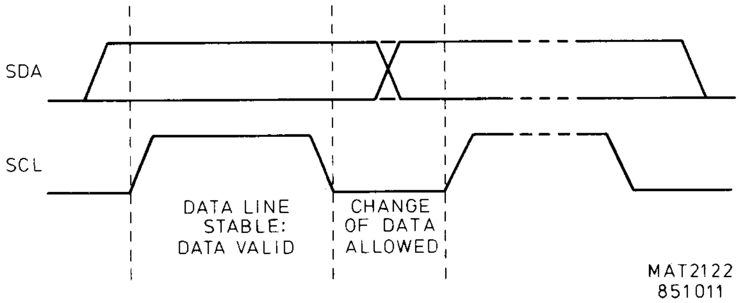

Figure 10.1 Bit transfer

Start and stop conditions:

Both data and clock lines remain HIGH when the bus is not busy. A HIGH-to-LOW transition of the data line, while the clock is HIGH is defined as the start condition (S). A LOW-to-HIGH transition of the data line while the clock is HIGH is defined as the stop condition (P).

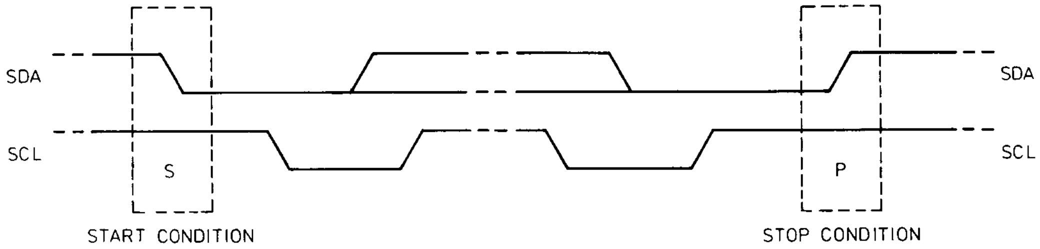
SDA
SCL
S
START CONDITION
SDA
SCL
P
STOP CONDITION

MAT2123
851011

Figure 10.2 Definition of start and stop conditions

10.1.3 I^{2}C structure

The two lines SDA and SCL are fed to the various circuits, where, depending on the addressing, this serial information is converted into the different control signals (see figure 10.3).

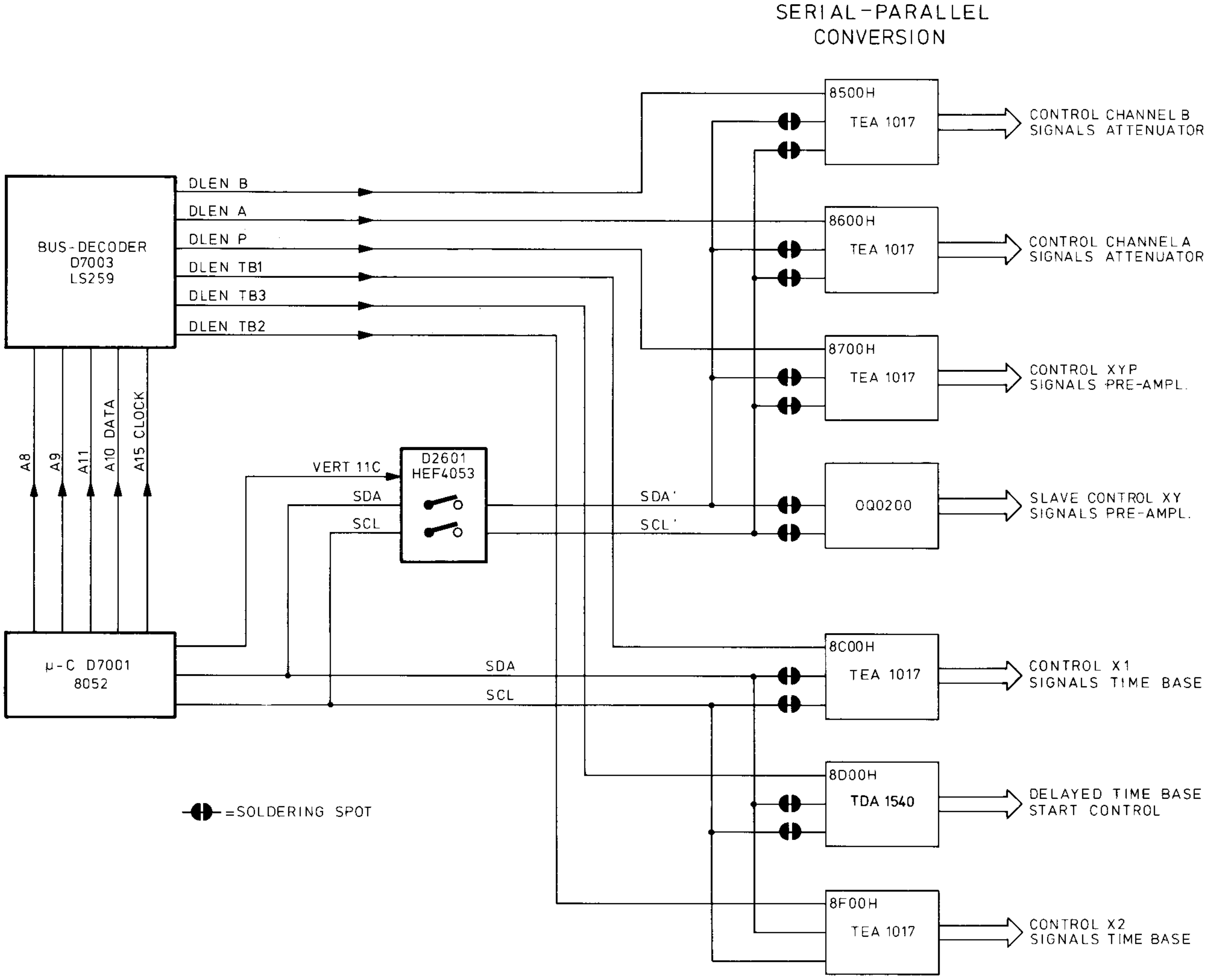
SERIAL-PARALLEL CONVERSION
BUS-DECODER
D7003
LS259
DLEN B
DLEN A
DLEN P
DLEN TB1
DLEN TB3
DLEN TB2
A8
A9
A11
A10 DATA
A15 CLOCK
µ-C D7001
8052
VERT 11C
SDA
SCL
D2601
HEF4053
SDA'
SCL'
SDA
SCL
8500H
TEA 1017
CONTROL CHANNEL B
SIGNALS ATTENUATOR
8600H
TEA 1017
CONTROL CHANNEL A
SIGNALS ATTENUATOR
8700H
TEA 1017
CONTROL XYP
SIGNALS PRE-AMPL.
OQ0200
SLAVE CONTROL XY
SIGNALS PRE-AMPL.
8C00H
TEA 1017
CONTROL X1
SIGNALS TIME BASE
8D00H
TDA 1540
DELAYED TIME BASE
START CONTROL
8F00H
TEA 1017
CONTROL X2
SIGNALS TIME BASE
=SOLDERING SPOT

MAT2125A
860214

Figure 10.3 I^{2}C structure

To select the serial-parallel conversion circuits, the bus decoder D7003 decodes the address lines A8, A9 and A11 into the DLEN (Data latch enable) signals according to the next table

ADDRESS LINES			DATA		
A11	A9	A8	A10		
0	0	0	1/0	8400H	SEL IIC
0	0	1	1/0	8500H	DLEN B
0	1	0	1/0	8600H	DLEN A
0	1	1	1/0	8700H	DLEN P
1	0	0	1/0	8C00H	DLEN TB1
1	0	1	1/0	8D00H	DLEN TB3
1	1	0	1/0	8E00H	DLEN TB2
1	1	1	1/0	8F00H	N.C.

To eliminate interference in the vertical circuits, the I^2C bus can be switched off for this circuit by switch D2601. The timing is obtained by the VERT IIC line.
Note that for servicing, solder joints are added in the p.c.b. tracks connecting the circuits. These can be used to localize a fault in the I^2C-bus by means of interrupting the bus connection.

10.1.4. Microcomputer MAB8052

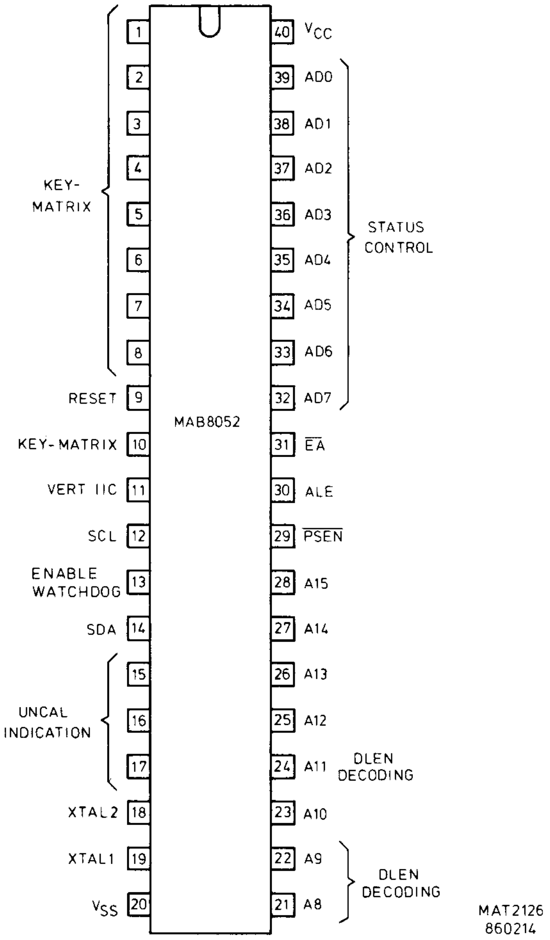
KEY-MATRIX
1
2
3
4
5
6
7
8
RESET 9
KEY-MATRIX 10
VERT IIC 11
SCL 12
ENABLE WATCHDOG 13
SDA 14
UNCAL INDICATION
15
16
17
XTAL2 18
XTAL1 19
V_{SS} 20
MAB8052
40 V_{CC}
39 AD0
38 AD1
37 AD2
36 AD3
35 AD4
34 AD5
33 AD6
32 AD7
STATUS CONTROL
31 $\overline{EA}$
30 ALE
29 $\overline{PSEN}$
28 A15
27 A14
26 A13
25 A12
24 A11
DLEN DECODING
23 A10
22 A9
21 A8
DLEN DECODING
MAT2126
860214

Figure 10.4 Pinning of microcomputer MAB 8052

The microprocessor has the following connections:

- * Crystal connections (pin 18 and 19)
  A 12 MHz crystal is connected to the inputs XTAL1 and XTAL2 to provide an accurate timing reference source.

- * RESET input (pin 9)
  After switching on a reset level HIGH is applied to this input. This reset signal forces the microcomputer to initiate the main program, beginning at the address 00000H. After the +5 V supply is within its specification, the RESET is released and the microcomputer is ready for use.

- * 8-bit quasi bidirectional I/O port (pin 1...pin 8) and quasi-bidirectional I/O port (pin 10), used to read the settings of the KEY-MATRIX switches S2...S32 (excl. S12-AUTOSET)

- * 3-bit quasi-bidirectional I/O port (pin 15...pin 17), used to read the UNCAL position of S5, S7 and S9 (UNCAL when logic HIGH).

- * WATCHDOG input (pin 13)
  The WATCHDOG is a facility to control the correct function of the software. When HIGH the internal counter will run. The software gives a pulse every 64 ms max. to reset this counter, so that the 64 ms max. cycle starts again. If the software does not function correctly, the internal counter receives no reset pulse and the counter will overflow initiating the main program (start address 0000H).

- * 8-bit open drain bidirectional I/O port (pin 21...pin 28), used for addressing the serial-parallel conversion circuits (see I^2C structure).

- * 8-bit quasi-bidirectional I/O port (pin 32...pin 39) used to read the status input via D7006.

- * SDA (pin 14); SCL (pin 12)
  Bidirectional I^2C lines.

- * VERT IIC (pin 11)
  Signal used as a digital switch control to switch-off the I^2C bus of the pre-amplifier control.

10.1.5. I^2C decoding

Integrated circuit D7002 serves as a multiplexer to make a separation between the I^2C lines for the LCD drives and the I^2C lines for the other circuits, controlled by the SEL IIC line. Only when SEL IIC is HIGH (address 8400H), are the SDA and SCL lines from the microcomputer connected to unit A8.

10.1.6. Status input

Integrated circuit D7006 serves as an input port to read the following status info:

- TEST OUT, indication for triggered mode, HIGH when triggered.
- FOOTN, remote control for AUTO SET, LOW when active.
- NOPTION, adapts software for optional trigger coupling, LOW when optional triggering.
- REMRQN, remote request line, LOW when active.
- probe indication status, adapts V/DIV reading for probe attenuation.

When the enable inputs (pin 1 and pin 19) become LOW, the status input is read and copied in the accumulator of the microcomputer via the data lines AD0...AD7.

Note that enabling is only possible when D7002-2 is switched-on to D7002-15, i.e. when A15 is HIGH (address 8000H ... FFFFH).

10.1.7 Probe indicator

Integrated circuit D7004 (000044) detects the kind of probe which is connected to the oscilloscope. Depending on the resistance between the probe indication input (pin 3 for channel A and pin 16 for channel B) and ground, the V/DIV reading of the LCD automatically increases according to the next table.

Pin 3 (16)	Pin 6 (17)	Pin 7 (12)	V/DIV attenuation
2k32	0	0	x10
6k98	1	0	x100
7k68	0	1	x1
10k	1	1	x1

10.1.8 C-Bus decoder

This integrated circuit decodes the address lines A8, A9 and A11 into the DLEN signals.
During the power-up all the lines are reset to LOW.

10.2 LCD DISPLAY CIRCUIT

The LCD is driven by three drivers D8001, D8002 and D8003 (PCF8577).
The temperature dependent supply voltage VCPCF is 4 V approx. at 25°C. When the temperature increases, this voltage decreases.
The single-pin built-in oscillator on pin 37 of D8001 provides the modulation frequency for the LCD segment driver outputs. Capacitor C7008 and resistor R7038 are connected to this pin to form the oscillator, with a frequency of 150 Hz approx. Pin 36 and pin 37 are used to determine the LCD drivers address in the I^2C bus.

The outputs pin 1...pin 32 directly drive the LCD.

Outputs BP1 and BP2 (pin 33 and pin 34) drive the COMMON pins of the LCD.

10.3 FRONT-PANEL CONTROLS

The front-panel controls give a voltage between 0 V...10 V to the various circuits.
To determine the UNCAL condition of VAR A, VAR B or VAR MTB, the d.c. voltages of the slider of the potentiometers are applied to comparator N7001. When the voltage level of the control is lower than 0,7 V, the microcomputer reads a logic LOW on its input and adapts the LCD display to indicate the CAL status (e.g. no flashing ">" sign visible).

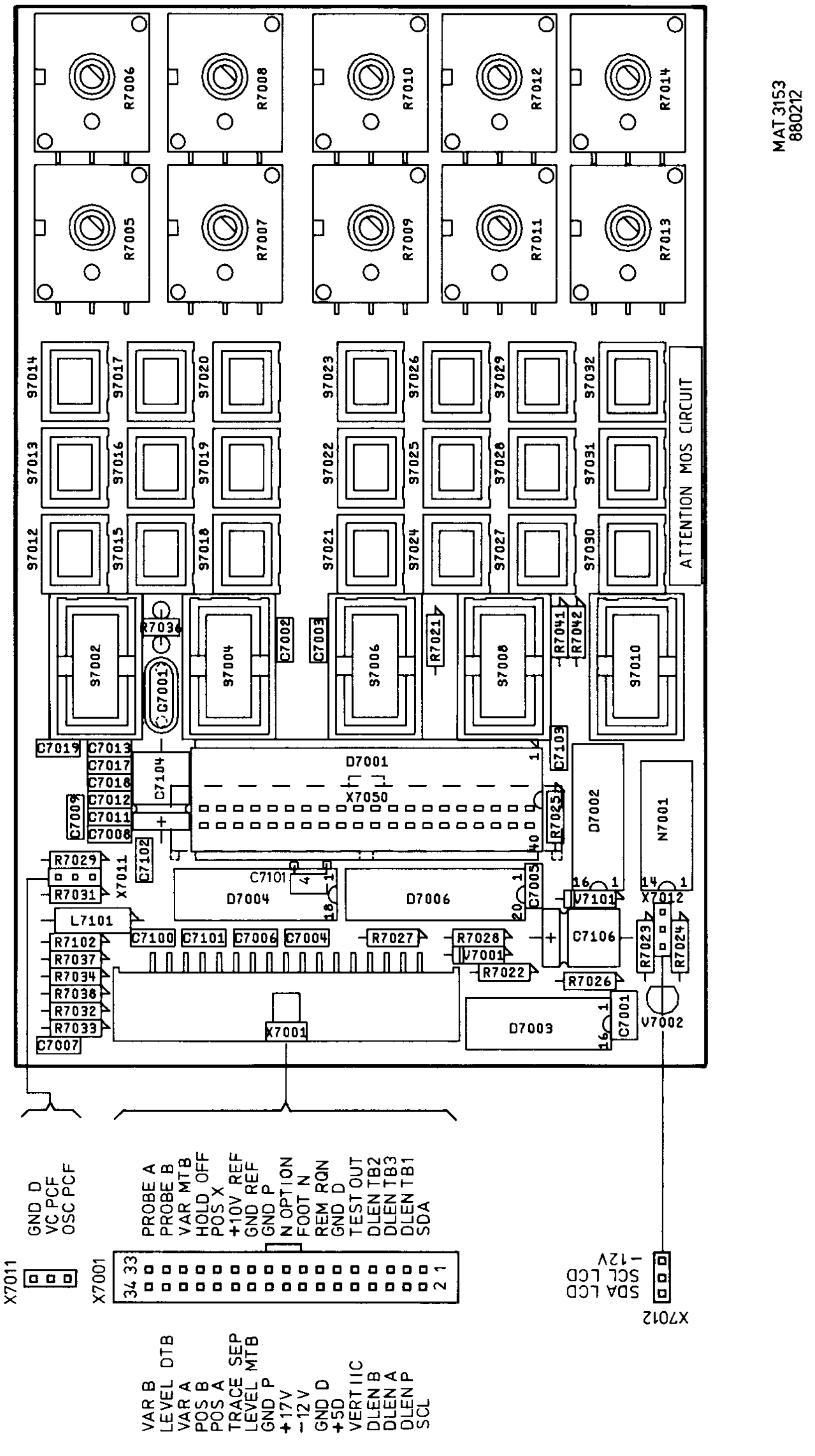
R7006
R7008
R7010
R7012
R7014
R7005
R7007
R7009
R7011
R7013
MAT3153
880212
S7014
S7017
S7020
S7023
S7026
S7029
S7032
S7013
S7016
S7019
S7022
S7025
S7028
S7031
S7012
S7015
S7018
S7021
S7024
S7027
S7030
ATTENTION MOS CIRCUIT
S7002
S7004
S7006
S7008
S7010
R7034
C7001
C7002
C7003
R7021
R7041
R7042
C7103
C7019
C7013
C7017
C7018
C7012
C7011
C7008
C7009
C7104
D7001
X7050
R7025
D7002
N7001
R7029
R7031
X7011
C7102
C7101
D7004
D7006
C7005
V7101
X7012
L7101
C7106
R7102
R7037
R7034
R7036
R7032
R7033
C7007
C7100
C7101
C7006
C7004
R7027
R7028
V7001
R7022
R7026
R7023
R7024
X7001
D7003
C7001
V7002
GND D
VC PCF
OSC PCF
X7011
PROBE A
PROBE B
VAR MTB
HOLD OFF
POS X
+10V REF
GND REF
GND P
N OPTION
FOOT N
REM RQN
GND D
TEST OUT
DLEN TB2
DLEN TB3
DLEN TB1
SDA
X7001
34 33
2 1
VAR B
LEVEL DTB
VAR A
POS B
POS A
TRACE SEP
LEVEL MTB
GND P
+17V
-12V
GND D
+5D
VERT IIC
DLEN B
DLEN A
DLEN P
SCL
-12V
SCL LCD
SDA LCD
X7012

Figure 10.5 Front unit p.c.b.

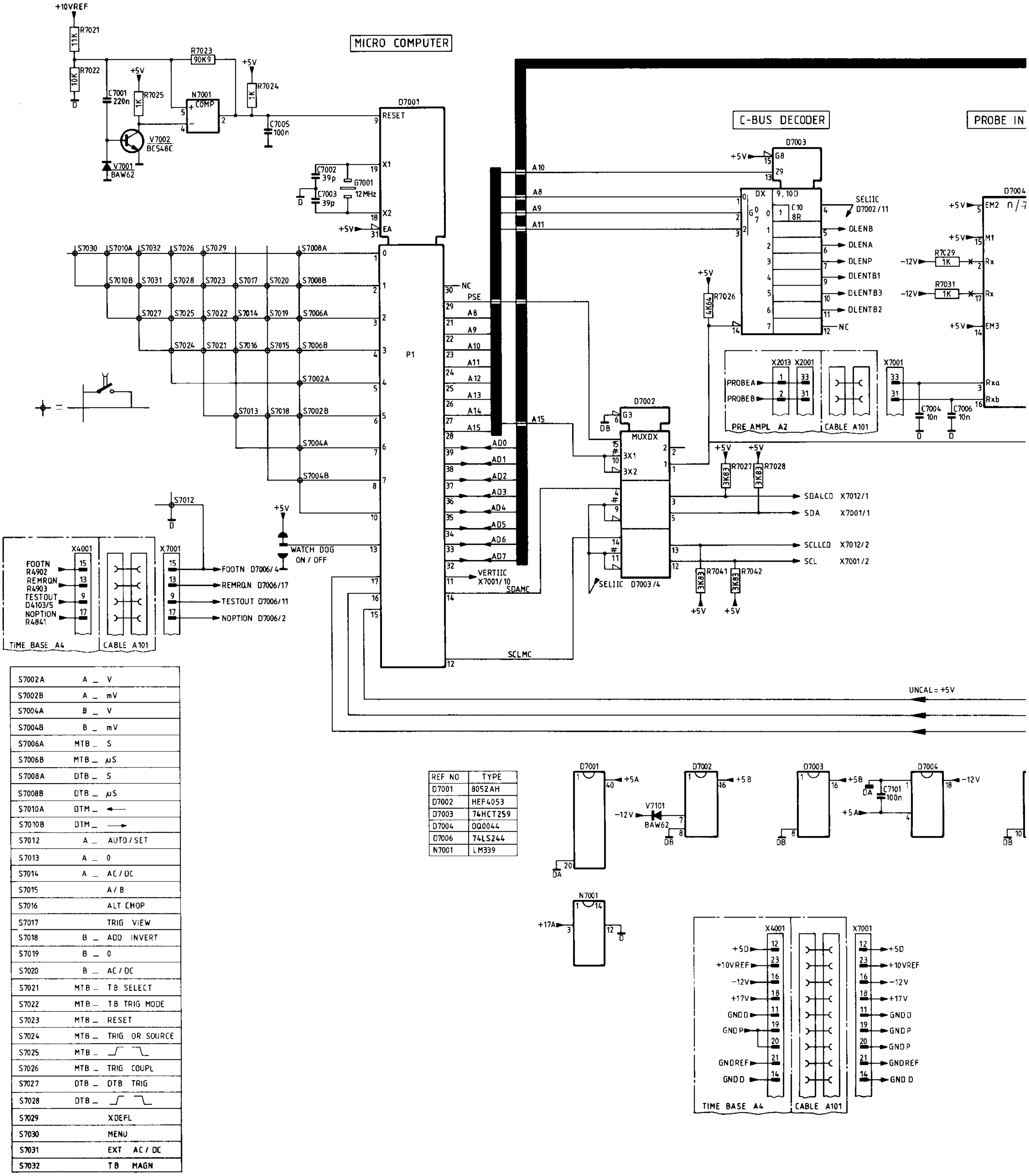
MICRO COMPUTER
C-BUS DECODER
PROBE IN
+10VREF
R7021 11K
R7022 10K
R7023 90K9
R7024 1K
R7025 1K
C7001 220n
N7001 COMP
V7002 BC548C
V7001 BAW62
C7005 100n
D7001
RESET
X1
X2
EA
P1
C7002 39p
C7003 39p
G7001 12MHz
D7003
D7002
MUXDX
3X1
3X2
SELIIC D7002/11
DLENB
DLENA
DLENP
DLENTB1
DLENTB3
DLENTB2
NC
PSE
VERTIIC X7001/10
SDAMC
SCLMC
SDALCD X7012/1
SDA X7001/1
SCLLCD X7012/2
SCL X7001/2
SELIIC D7003/4
R7026 4K64
R7027 3K83
R7028 3K83
R7041 3K83
R7042 3K83
D7004
EM2
M1
Rx
EM3
Rxa
Rxb
R7029 1K
R7031 1K
C7004 10n
C7006 10n
X2013
X2001
X7001
PROBE A
PROBE B
PRE AMPL A2
CABLE A101
X4001
FOOTN R4902
REMRQN R4903
TESTOUT D4103/5
NOPTION R4841
FOOTN D7006/4
REMRQN D7006/17
TESTOUT D7006/11
NOPTION D7006/2
TIME BASE A4
WATCH DOG ON / OFF
UNCAL=+5V
AD0
AD1
AD2
AD3
AD4
AD5
AD6
AD7
A8
A9
A10
A11
A12
A13
A14
A15
V7101 BAW62
C7101 100n
+5D
+10VREF
-12V
+17V
GNDD
GNDP
GNDREF

S7002A	A _	V
S7002B	A _	mV
S7004A	B _	V
S7004B	B _	mV
S7006A	MTB _	S
S7006B	MTB _	μS
S7008A	DTB _	S
S7008B	DTB _	μS
S7010A	DTM _	←
S7010B	DTM _	→
S7012	A _	AUTO / SET
S7013	A _	0
S7014	A _	AC / DC
S7015		A / B
S7016		ALT CHOP
S7017		TRIG VIEW
S7018	B _	ADD INVERT
S7019	B _	0
S7020	B _	AC / DC
S7021	MTB _	TB SELECT
S7022	MTB _	TB TRIG MODE
S7023	MTB _	RESET
S7024	MTB _	TRIG OR SOURCE
S7025	MTB _	_/‾ ‾_
S7026	MTB _	TRIG COUPL
S7027	DTB _	DTB TRIG
S7028	DTB _	_/‾ ‾_
S7029		XDEFL
S7030		MENU
S7031		EXT AC / DC
S7032		TB MAGN

REF NO	TYPE
D7001	8052AH
D7002	HEF4053
D7003	74HCT259
D7004	OQ0044
D7006	74LS244
N7001	LM339

Figure 10.6 Circuit diagram of front unit

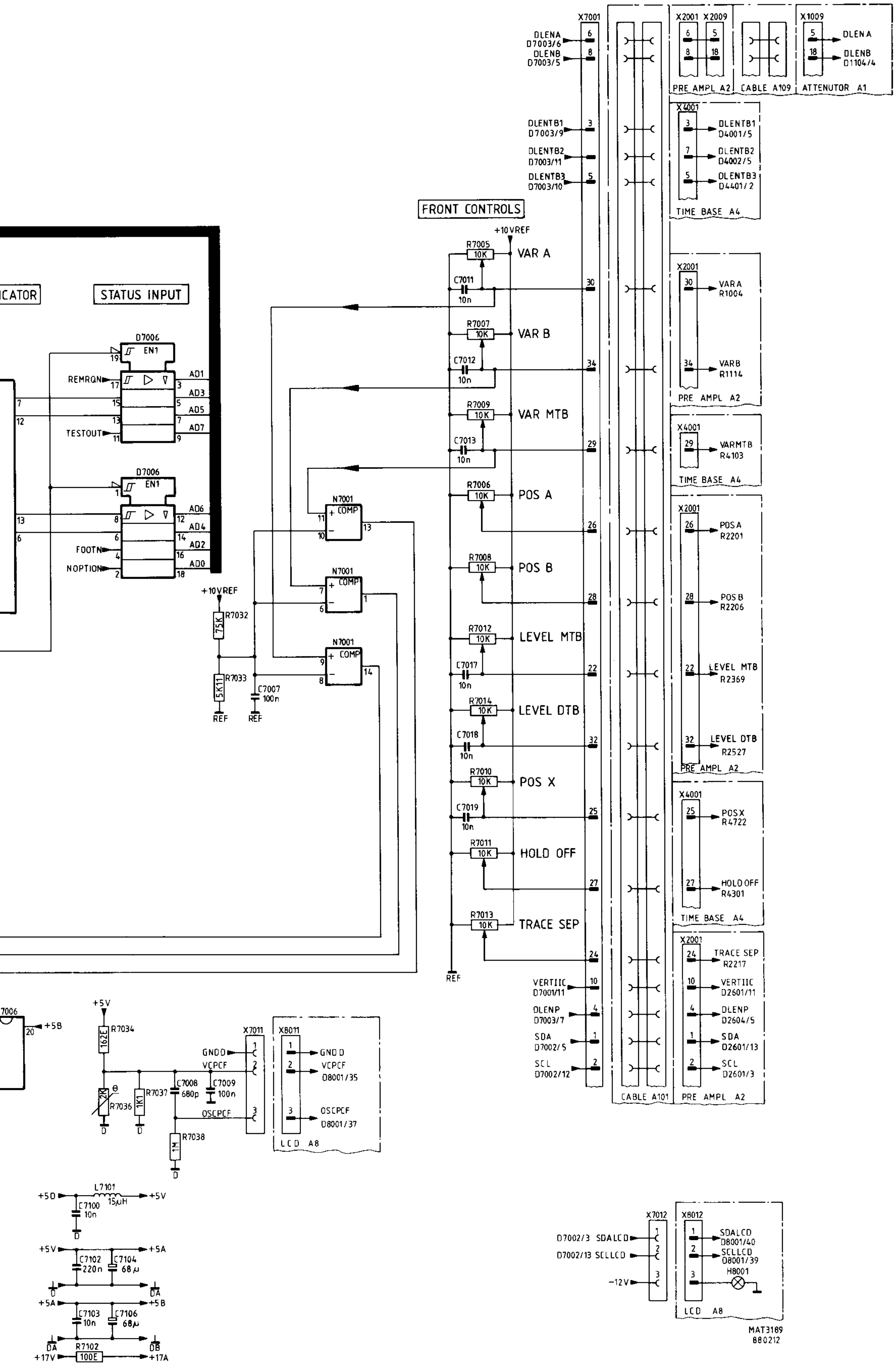
X7001
DLENA D7003/6
DLENB D7003/5
X2001 X2009
PRE AMPL A2
CABLE A109
X1009
DLEN A
DLENB D1104/4
ATTENUTOR A1
DLENTB1 D7003/9
DLENTB2 D7003/11
DLENTB3 D7003/10
X4001
DLENTB1 D4001/5
DLENTB2 D4002/5
DLENTB3 D4401/2
TIME BASE A4
FRONT CONTROLS
+10VREF
R7005 10K VAR A
C7011 10n
R7007 10K VAR B
C7012 10n
R7009 10K VAR MTB
C7013 10n
R7006 10K POS A
R7008 10K POS B
R7012 10K LEVEL MTB
C7017 10n
R7014 10K LEVEL DTB
C7018 10n
R7010 10K POS X
C7019 10n
R7011 10K HOLD OFF
R7013 10K TRACE SEP
REF
VAR A R1004
VAR B R1114
PRE AMPL A2
VARMTB R4103
TIME BASE A4
POS A R2201
POS B R2206
LEVEL MTB R2369
LEVEL DTB R2527
PRE AMPL A2
POS X R4722
HOLD OFF R4301
TIME BASE A4
TRACE SEP R2217
VERTIIC D7001/11
VERTIIC D2601/11
DLENP D7003/7
DLENP D2604/5
SDA D7002/5
SDA D2601/13
SCL D7002/12
SCL D2601/3
CABLE A101
PRE AMPL A2
ICATOR
STATUS INPUT
D7006 EN1
REMRQN
TESTOUT
AD1 AD3 AD5 AD7
D7006 EN1
FOOTN
NOPTION
AD6 AD4 AD2 AD0
N7001 COMP
N7001 COMP
N7001 COMP
+10VREF
R7032 75K
R7033 5K11
C7007 100n
REF REF
D7006
+5B
+5V
R7034 162E
R7036 2K
R7037 1K1
C7008 680p
C7009 100n
R7038 1M
X7011
GNDD
VCPCF
OSCPCF
X8011
GND D
VCPCF D8001/35
OSCPCF D8001/37
LCD A8
L7101 15μH
+5D +5V
C7100 10n
+5V +5A
C7102 220n
C7104 68μ
D DA
+5A +5B
C7103 10n
C7106 68μ
DA DB
R7102 100E
+17V +17A
X7012
X8012
D7002/3 SDALCD
D7002/13 SCLLCD
-12V
SDALCD D8001/40
SCLLCD D8001/39
H8001
LCD A8
MAT3189
880212

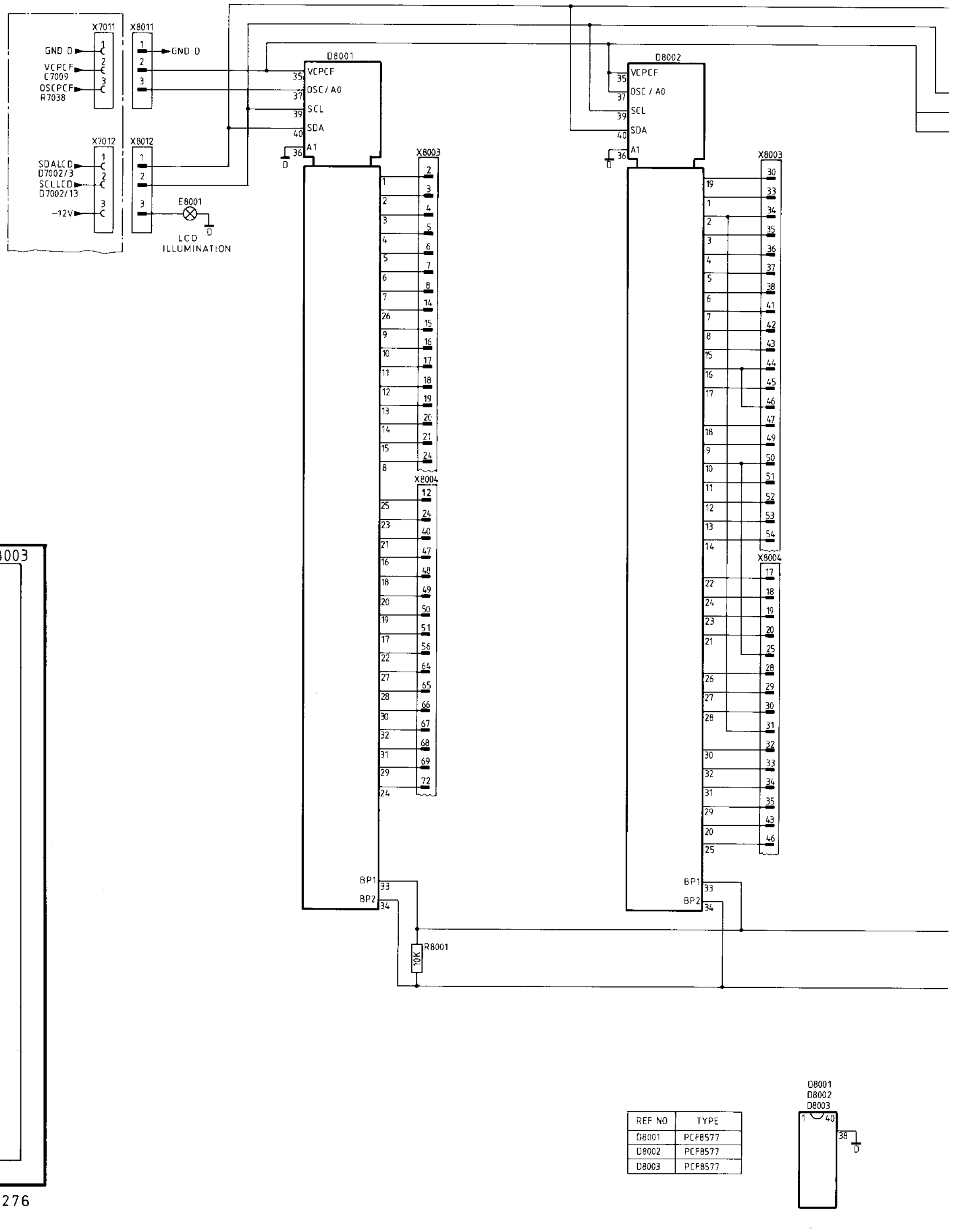
X7011
GND D
VCPCF
C7009
OSCPCF
R7038
X8011
GND D
X7012
SDALCD
D7002/3
SCLLCD
D7002/13
-12V
X8012
E8001
LCD ILLUMINATION
D8001
VCPCF
OSC / A0
SCL
SDA
A1
BP1
BP2
X8003
X8004
R8001
10K
D8002
D8001
D8002
D8003

REF NO	TYPE
D8001	PCF8577
D8002	PCF8577
D8003	PCF8577

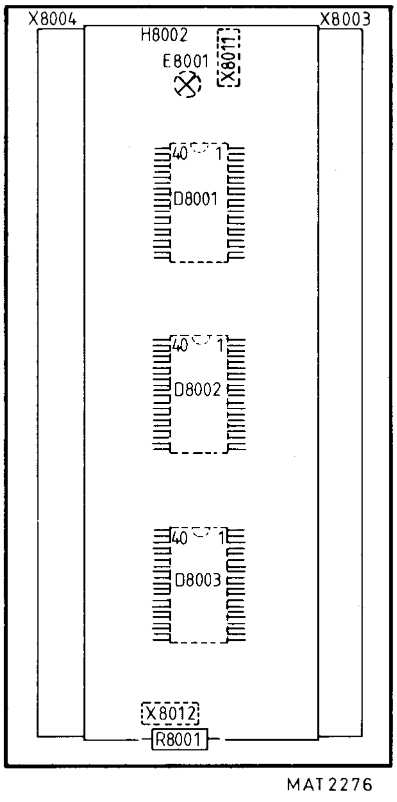
X8004
X8003
H8002
E8001
X8011
D8001
D8002
D8003
X8012
R8001
MAT2276

Figure 10.7 LCD unit p.c.b.

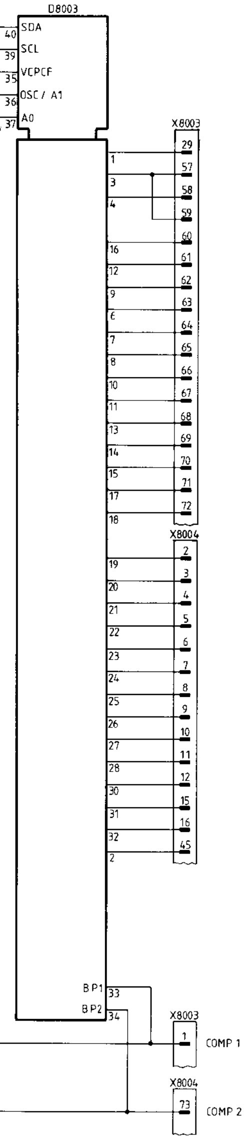
D8003
SDA
SCL
VCPCF
OSC / A1
A0
40
39
35
36
37
X8003
X8004
BP1
BP2
33
34
COMP 1
COMP 2

X8004				
	COM1		COM2	
PIN	DISPLAY / SEGMENT	CH	DISPLAY / SEGMENT	CH
73			COM 2	
72	>	A	INV	
71	NC		NC	
70	NC		NC	
69	1 a	A	1 f	A
68	1 g	A	1 e	A
67	1 c	A	1 d	A
66	1 b	A	P1	A
65	TRIG VIEW		A	
64	ADD		B	
63	NC		NC	
62	NC		NC	
61	NC		NC	
60	NC		NC	
59	NC		NC	
58	NC		NC	
57	NC		NC	
56	>	B	INV	B
55	NC		NC	
54	NC		NC	
53	NC		NC	
52	NC		NC	
51	3 a	B	3 f	B
50	3 g	B	3 e	B
49	3 c	B	3 d	B
48	3 b	B	P2	B
47	TRIG' D		NOT	
46	XDEFL		TB	
45			M	
44	NC		NC	
43	TRIG		AUTO	
42	NC		NC	
41	NC		NC	
40			>	MTB
39	NC		NC	
38	NC		NC	
37	NC		NC	
36	NC		NC	
35	5 a	MTB	5 f	MTB
34	5 g	MTB	5 e	MTB
33	5 c	MTB	5 d	MTB
32	5 b	MTB	P3	MTB
31		MTB	EXT	MTB
30	B	MTB	A	MTB
29	HF		LF	
28	DC		P - P	
27	NC			
26	NC			
25			*	DTB
24			>	DTB
23	NC		NC	
22	NC		NC	
21	NC		NC	
20	7 a	DTB	7 f	DTB
19	7 g	DTB	7 e	DTB
18	7 c	DTB	7 d	DTB
17	7 b	DTB	P4	DTB
16	B	DTB	STARTS	
15	EXT	DTB	A	DTB
14	DC	DTB	AC	DTB
13	NC		NC	DTM
12	MENU		REMOTE	
11	9 a	DTM	9 f	DTM
10	9 g	DTM	9 e	DTM
9	9 c	DTM	9 d	DTM
8	9 b	DTM	P5	DTM
7	10 a	DTM	10 f	DTM
6	10 g	DTM	10 e	DTM
5	10 c	DTM	10 d	DTM
4	10 b	DTM	P6	DTM
3	11 a	DTM	11 f	DTM
2	11 g	DTM	11 e	DTM
1	NC		NC	

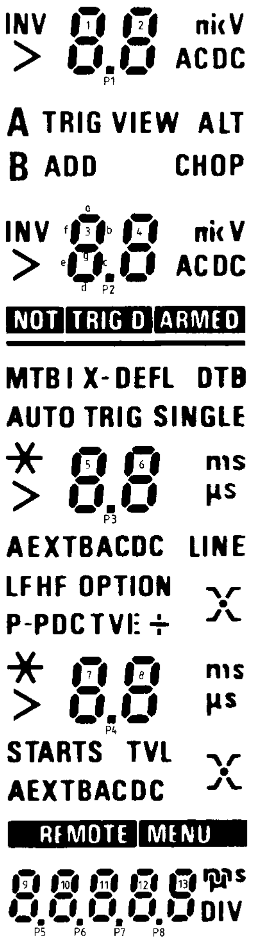
INV
nıcV
>
ACDC
P1
A TRIG VIEW ALT
B ADD CHOP
INV
nıcV
>
ACDC
P2
NOT TRIG D ARMED
MTB I X-DEFL DTB
AUTO TRIG SINGLE
ms
>
µs
P3
AEXTBACDC LINE
LFHF OPTION
P-PDCTVI: ÷
ms
>
µs
P4
STARTS TVL
AEXTBACDC
REMOTE MENU
mµs
DIV
P5
P6
P7
P8

X8003				
	COM1		COM2	
PIN	DISPLAY / SEGMENT	CH	DISPLAY / SEGMENT	CH
1	COM1			
2	2 a	A	2 f	A
3	2 b	A		
4	2 g	A	2 e	A
5	2 c	A	2 d	A
6	rf	A	7	A
7	V	A	'<	A
8	DC	A	A	A
9	NC		NC	
10	NC		NC	
11	NC		NC	
12	NC		NC	
13	NC		NC	
14	CHOP		ALT	
15	4 a	B	4 f	B
16	4 b	B		
17	4 g	B	4 e	B
18	4 c	B	4 d	B
19	π	B	7	B
20	V	B	'<	B
21	DC	B	AC	B
22	NC		NC	
23	NC		NC	
24	ARMED		———	
25	NC		NC	
26	NC		NC	
27	NC		NC	
28	NC		NC	
29	DTB		I	
30	SINGLE		*	MTB
31	NC		NC	
32	NC		NC	
33	6 a	MTB	6 f	MTB
34	6 b	MTB		MTB
35	6 g	MTB	6 e	MTB
36	6 c	MTB	6 d	MTB
37	7	MTB	n	MTB
38	s	MTB	µs	MTB
39	NC		NC	
40	NC		NC	
41	DC	MTB	AC	MTB
42	OPTION	MTB	TVI	MTB
43	LINE	MTB	=	MTB
44	‾\	MTB		MTB
45	_/‾	MTB	●	MTB
46	_	MTB		MTB
47	¦	MTB		MTB
48	NC		NC	
49	8 a	DTB	8 f	DTB
50	8 b	DTB		
51	8 g	DTB	8 e	DTB
52	8 c	DTB	8 d	DTB
53	7	DTB	n	DTB
54	s	DTB	µs	DTB
55	NC		NC	
56	NC		NC	
57	‾\	DTB	TVL	DTB
58	_/‾	DTB	●	DTB
59	_	DTB		DTB
60	12 a	DTM	12 f	DTM
61	13 a	DTM	13 f	DTM
62	13	DTM		DTM
63	7	DTM	n	DTM
64	s	DTM	µ	DTM
65	V	DTM	DI	DTM
66	13 c	DTM	13 d	DTM
67	13 g	DTM	13 e	DTM
68	12 b	DTM	P8	DTM
69	12 c	DTM	12 d	DTM
70	12 g	DTM	12 e	DTM
71	11 b	DTM	P7	DTM
72	11 c	DTM	11 d	DTM
73	NC		NC	

MAT 2277

Figure 10.8 Circuit diagram of LCD unit

11. PERFORMANCE CHECK

11.1 GENERAL INFORMATION

WARNING: Before switching-on, ensure that the instrument has been installed in accordance with the Installation Instructions outlined in section 2 of the Operating Manual.

This procedure is intended to:

- Check the instruments'specification.
- Be used for incoming inspection to determine the acceptability of newly purchased instruments and/or recently recalibrated instrument.
- Check the necessity of recalibration after the specified recalibration intervals.

NOTE: The procedure does not check every facet of the instruments calibration; rather, it is concerned primarily with those parts of the instrument which are essential to measurement accuracy and correct operation. Removing the instruments covers is not necessary to perform this procedure. All checks are made from the outside of the instrument.

If the test is started within a short period after switching-on, bear in mind that steps may be out of specification, due to insufficient warming-up time.
Warming-up time under average conditions is 30 minutes.

The performance checks are made with a stable, well-focussed, low-intensity display. Unless otherwise noted, adjust the intensity and trigger-level controls as needed.

IMPORTANT NOTES:

* At the start of every check, the controls always occupy the preliminary settings AUTO SET position, unless otherwise stated.

* The input voltage has to be supplied to the A-input; unless otherwise stated.
  Set the TIME/DIV switches to a suitable position; unless otherwise stated.

* Tolerances given are for the instrument under test and do not include test equipment error.

* In this chapter in some checks channel B is mentioned between brackets behind channel A. It is advised to perform first channel A checks. After that the checks for channel B can be done.

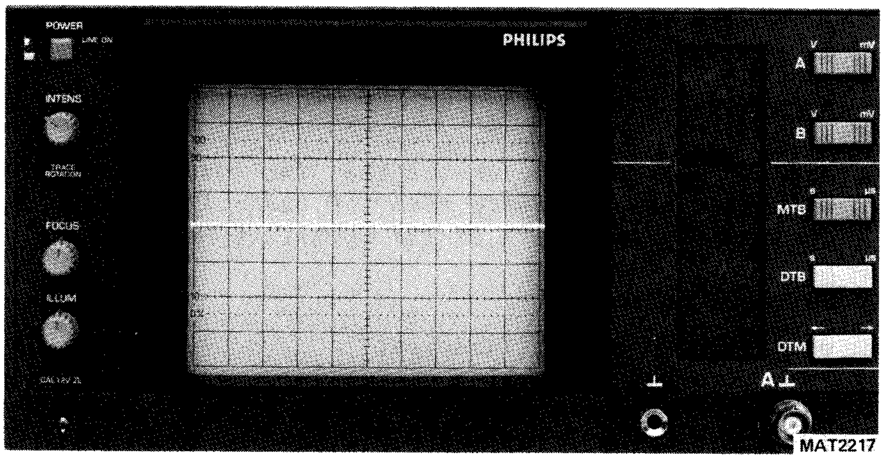
POWER
LINE ON
INTENS
TRACE ROTATION
FOCUS
ILLUM
PHILIPS
V
mV
A
B
s
µs
MTB
DTB
DTM
A ⊥
⊥
MAT2217

Figure 11.1 SOFTSTART condition

11.2 PRELIMINARY SETTINGS

- Switch-on the instrument (no input signal).
- Check if all LCD segments are on for approx. 1 sec.
- Press MENU and AUTO SET.
- Check if the frontcontrols are set in sequence in the softstart condition as indicated in figure 2.1.
- At the start of every check only AUTO SET must be pressed (after the input signal is applied).

11.3 RECOMMENDED TEST EQUIPMENT

The test equipment that must be used for this performance check is as given in section 13.2 of the Service manual, except:

Trimming tool kit
Oscilloscope
Digital multimeter

11.4 CHECKING PROCEDURE

11.4.1 POWER SUPPLY (characteristics: 2.5)

*	SUBJECT	Line voltage input
	TEST EQUIPMENT	Variable mains transformer
	MAINS VOLTAGE	Between 100 V and 240 V ac (r.m.s.) Frequency: 50 Hz...400 Hz
	SETTINGS	- Press POWER ON - Apply CAL signal to input A - Press AUTO SET
	REQUIREMENTS	- Starts at any mains voltage between 100 V...264 V ac (r.m.s.) - Instruments performance does not change over indicated mains voltage range; displayed CAL signal distortion-free and with equal intensity.
	MEASURING RESULTS	....
*	SUBJECT	Power Consumption (ac source)
	TEST EQUIPMENT	Wattmeter (moving iron meter)
	MAINS VOLTAGE	Mains voltage 220 V (r.m.s.).
	SETTINGS	Press POWER ON
	REQUIREMENTS	Consumes : 45 W
	MEASURING RESULTS	....

11.4.2 DISPLAY (characteristics section 2.1)

*	SUBJECT	Orthogonality
	TEST EQUIPMENT	LF sine-wave generator
	INPUT VOLTAGE	Sine-wave signal 50 Hz...60 Hz
	SETTINGS	- Set trace exactly in parallel with horizontal graticule line (see section: Trace rotation) - Apply a sine wave signal to input A. (50 Hz...60 Hz) - Set trace height to 8 div. - Press X DEFL. - Press TRIG or X SOURCE and select B as MTB trigger source
	REQUIREMENTS	- Check if vertical line is in parallel with the vertical graticule line in the centre of the screen. - Angle with respect to horizontal line must be 90° +or- 1°
	MEASURING RESULTS	....

*	SUBJECT	LCD check
	TEST EQUIPMENT	-
	INPUT VOLTAGE	-
	SETTINGS	- Press MENU and keep it pressed - Then press AUTO SET - Check if LCD indicates "1°", "2°", "AS" and "3°" - Press "S" of DTB UP-DOWN control - Press MENU, 8 times - All segments of the LCD should be ON according to figure 3.2 of the Operating Manual. - To leave this test: press MENU and then AUTO SET
	REQUIREMENTS	- Check if all segments of the LCD are on (see figure 3.2 of the Operating manual)
	MEASURING RESULTS	....

11.4.3 VERTICAL DEFLECTION OR Y-AXIS (characteristics section 2.2)

*	SUBJECT	Vertical Deflection
	TEST EQUIPMENT	LF Square wave generator
	INPUT VOLTAGE	Square wave signal 1 kHz to A
	SETTINGS AND REQUIREMENTS	- Set trace height to 5 div. - Check if one square wave signal of 5 div. is displayed - Press A/B; channel A and B on - Check if a square wave signal (A) and a zero trace (B) is displayed and if A and B are on. - Press ALT/CHOP - Check if ALT or CHOP is active. - Press TRIG VIEW. - Check if two square wave signals (A and TRIG VIEW) and a zero trace (B) are displayed - Press TRIG VIEW; Check if A and B are on.
	INPUT VOLTAGE	Square wave signal 1 kHz to input A and B
	SETTINGS AND REQUIREMENTS	- Press AUTO SET - Check if A, B and ALT are on - Set trace height to 4 div. - Press AC/DC of channel A and B for DC input coupling - Press ADD/INVERT twice for ADD mode. - Check if 3 square wave signals are displayed: channels A and B each 4 div. trace height and A+B with 8 div. trace height. - Press ADD/INVERT once more for ADD and INVERT mode - Check if 2 square waves of 4 div. (A and B) and a line is displayed (A-B)
	MEASURING RESULTS	....

*	SUBJECT	LCD check
	TEST EQUIPMENT	-
	INPUT VOLTAGE	-
	SETTINGS	- Press MENU and keep it pressed - Then press AUTO SET - Check if LCD indicates "1°", "2°", "AS" and "3°" - Press "S" of DTB UP-DOWN control - Press MENU, 8 times - All segments of the LCD should be ON according to figure 3.2 of the Operating Manual. - To leave this test: press MENU and then AUTO SET
	REQUIREMENTS	- Check if all segments of the LCD are on (see figure 3.2 of the Operating manual)
	MEASURING RESULTS	....

11.4.3 VERTICAL DEFLECTION OR Y-AXIS

(characteristics section 2.2)

---

*	SUBJECT	Vertical Deflection
	TEST EQUIPMENT	LF Square wave generator
	INPUT VOLTAGE	Square wave signal 1 kHz to A
	SETTINGS AND REQUIREMENTS	- Set trace height to 5 div. - Check if one square wave signal of 5 div. is displayed - Press A/B; channel A and B on - Check if a square wave signal (A) and a zero trace (B) is displayed and if A and B are on. - Press ALT/CHOP - Check if ALT or CHOP is active. - Press TRIG VIEW. - Check if two square wave signals (A and TRIG VIEW) and a zero trace (B) are displayed - Press TRIG VIEW; Check if A and B are on.
	INPUT VOLTAGE	Square wave signal 1 kHz to input A and B
	SETTINGS AND REQUIREMENTS	- Press AUTO SET - Check if A, B and ALT are on - Set trace height to 4 div. - Press AC/DC of channel A and B for DC input coupling - Press ADD/INVERT twice for ADD mode. - Check if 3 square wave signals are displayed: channels A and B each 4 div. trace height and A+B with 8 div. trace height. - Press ADD/INVERT once more for ADD and INVERT mode - Check if 2 square waves of 4 div. (A and B) and a line is displayed (A-B)
	MEASURING RESULTS	....

*	SUBJECT	Vertical Deflection coefficients and input coupling of Channels A and B (characteristics section 2.2.1)
	TEST EQUIPMENT	Square-wave calibration generator (PG506)
	INPUT VOLTAGE	Square-wave signal 1 kHz to input A(B), amplitude 10 mVpp...20 Vpp in 1-2-5 steps
	SETTINGS AND REQUIREMENTS	- Apply a 1 kHz square wave signal of 10 mV to input A(B) - Set A (B) to 2 mV/div. - Check if the amplitude of the signal is 5 div. (+or- 3%) - Increase the input amplitude and vertical sensitivity with the following steps:

Input voltage (pp)	A (B) setting	Requirements	Measuring results
10 mV	2 mV	5 div.(+or-3%)	....
20 mV	5 mV	4 div.(+or-3%)	....
50 mV	10 mV	5 div.(+or-3%)	....
0,1 V	20 mV	5 div.(+or-3%)	....
0,2 V	50 mV	4 div.(+or-3%)	....
0,5 V	100 mV	5 div.(+or-3%)	....
1 V	200 mV	5 div.(+or-3%)	....
2 V	500 mV	4 div.(+or-3%)	....
5 V	1 V	5 div.(+or-3%)	....
10 V	2 V	5 div.(+or-3%)	....
20 V	5 V	4 div.(+or-3%)	....
50 V	10 V	5 div.(+or-3%)	....

*	SUBJECT	Variable gain control range (continued procedure of previous subject)
	SETTING	- Turn VAR control fully anti-clockwise
	REQUIREMENTS	- Check if displayed amplitude <2 div. (1:>2,5)
	MEASURING RESULTS	....
*	SUBJECT	Input coupling (continued procedure of previous subject)
	SETTINGS AND REQUIREMENTS	- Turn VAR control fully clockwise. - Press "GND"; check if input signal is interrupted. - Press "GND" again and then AC/DC - Check if in DC position the signal shifts upwards
	MEASURING RESULTS	....
*	SUBJECT	Frequency response
	TEST EQUIPMENT	Constant amplitude sine-wave generator (SG503)
	INPUT VOLTAGE	Constant amplitude sine-wave signal, 120 mV frequency 50 kHz...50 MHz to input A (B).

SETTINGS AND REQUIREMENTS	- Set A (B) to 20 mV/div. - Apply 50 kHz sine-wave signal to A (B) - Adjust trace height to exactly 6 div. - Increase the frequency of the input signal up to 60 MHz. - Check if the vertical deflection is > 4,2 div. (-3 dB) over the complete bandwidth range (>60 MHz). - Reduce the amplitude of the input signal to 12 mV and the frequency to 50 kHz. - Set A (B) to 2 mV/div. - Adjust the trace height to exactly 6 div. - Increase the frequency up to 35 MHz. - Check if the vertical deflection is > 4,2 div. (-3 dB) over the complete bandwidth range (>35 MHz)
MEASURING RESULTS	....
* SUBJECT	Rise-Time
IMPORTANT	THE RISE TIME IS A CALCULATED VALUE, ACCORDING FORMULA: BANDWIDTH X RISE-TIME = 0,35
TEST EQUIPMENT	Fast-rise square-wave generator (PG506)
INPUT VOLTAGE	Fast-rise square-wave signal $\leq$ 1 ns to input A (B) frequency: 1MHz.
SETTINGS	- Set A(B) to 50 mV/div - Press TB MAGN - Set MAIN TB to 5 ns/div - Adjust the trace height exactly between the dotted lines 0% and 100% (5 div.)
REQUIREMENTS	Important: T_R(measured)= $\sqrt{T_R(\text{input signal})^2 + T_R(\text{oscilloscope})^2}$ - Check the rise-time, measured between the 10% and 90% lines (4 div.); * rise-time must be: 5,8 ns or less (approx. 1,2 div. or less).
MEASURING RESULTS	....

*	SUBJECT	Noise
	TEST EQUIPMENT	-
	INPUT VOLTAGE	-
	SETTINGS	- Press A/B: channel A and B on - Set channel A and B to 20 mV/div. - Press ALT/CHOP for CHOP mode - Press GND of both channels for grounded input coupling
	REQUIREMENT	- Check if the traces are not thicker than 0,5 subdiv.
	MEASURING RESULTS	....
*	SUBJECT	Vertical Dynamic range
	TEST EQUIPMENT	Constant amplitude sine-wave generator
	INPUT VOLTAGE	Sine-wave signal of 1 MHz, 2,4 Vpp to input A(B)
	SETTINGS	- Apply sine-wave signal of 1 MHz, 2,4 Vpp to input A (B). - Set A (B) to 100 mV/div. - Shift with the Y POS control the sine-wave vertically over the screen.
	REQUIREMENT	- Check if the top and bottom of the sine-wave signal can be displayed distortion-free (24 div. trace height).
	INPUT VOLTAGE	Sine-wave signal of 50 MHz, 1,6 Vpp to input A (B)
	SETTINGS	- Set A (B) to 200 mV/div. - Set the trace height to exactly 8 div. - Increase the frequency of the input signal up to 50 MHz
	REQUIREMENT	- Check if a sine-wave signal of 8 div. is displayed distortion-free.
	MEASURING RESULTS	....

*	SUBJECT	Position range (vertical)
	TEST EQUIPMENT	LF Sine-wave generator
	INPUT VOLTAGE	Sine-wave signal of 1 kHz, 8 V to input A(B)
	SETTINGS	- Set the channel A (B) input sensitivity to 1 V/div. - Apply a sine-wave of 1 kHz/8 div. to the channel A (B) input. - Set the channel A (B) input sensitivity to 500 mV/div. - Rotate the channel A (B) Y POS control fully clockwise and anti-clockwise
	REQUIREMENT	- Check if the top and the bottom of the signal can be positioned on the vertical centre line of the screen.
	MEASURING RESULTS	....
*	SUBJECT	Decoupling factor between channels A and B at 10 MHz
	TEST EQUIPMENT	Sine-wave calibration generator (SG503)
	INPUT VOLTAGE	Sine-wave signal 10 MHz, 4 V to input A(B)
	SETTINGS	- Set channel A and B to 0,5 V/div. - Apply sine-wave input signal to input A(B) - Set the trace height to 8 div. - Press A/B (channel with input signal off).
	REQUIREMENTS	- Check if trace height of channel without input signal B(A) is < 0,08 div. (1:>100)
	MEASURING RESULTS	....
*	SUBJECT	Decoupling factor between channels A and B at 50 MHz
	TEST EQUIPMENT	HF sine-wave generator (SG503)
	INPUT VOLTAGE	50 MHz sine-wave signal, 4 V to input A(B)
	SETTINGS	- Do the same settings as indicated above
	REQUIREMENTS	- Check if trace height of channel without input signal B(A) is <0,16 div. (1:>50)
	MEASURING RESULTS	....
*	SUBJECT	Common Mode Rejection Ratio
	TEST EQUIPMENT	HF constant Amplitude sine-wave generator (SG503)
	INPUT VOLTAGE	Sine wave signal 1 MHz, 4 Vpp to inputs A and B
	SETTINGS	- Set A and B to 500 mV/div. (8 div.) - Set input coupling of channels A and B to DC - Press ADD/INVERT three times (ADD and INVERT on) - Adjust one VAR control (A or B) for minimum trace height difference of channel A and B.
	REQUIREMENT	- Check if the trace height of the A-B signal is < 0,08 div.
	MEASURING RESULTS	....

*	SUBJECT	LF linearity (vertical)
	TEST EQUIPMENT	LF square-wave generator
	INPUT VOLTAGE	Square-wave signal 50 kHz, 200 mV to input A(B)
	SETTINGS	- Set A (B) to 100 mV/div. - Set the square-wave signal in the vertical centre of the screen. - Adjust the square-wave signal to exactly 2 div. trace height. - Shift the signal with the Y POS control to the two upper and lower div. of the screen.
	REQUIREMENT	- Check if the trace height in the two upper and lower div. is 2 div. (max. ampl. deviation must be <3%)
	MEASURING RESULTS	....
*	SUBJECT	Visual Signal Delay
	TEST EQUIPMENT	Square wave calibration generator (PG506)
	INPUT VOLTAGE	Fast-rise input signal 1 MHz, ≤1 ns, 0,5 V to input A
	SETTINGS	- Apply fast-rise input signal to input A - Set A to 100 mV/div. - Set MAIN TB to 50 ns/div. - Press TB MAGN and turn X POS - Set INTENSITY fully clock-wise - Set trigger coupling to DC and adjust with LEVEL MTB for maximum visual signal delay.
	REQUIREMENT	- Check if visual signal delay is >15 ns
	MEASURING RESULTS	....
*	SUBJECT	Base line jump
	TEST EQUIPMENT	-
	INPUT VOLTAGE	-
	SETTINGS	Attenuator balance - This check must be done in the SERVICE MENU "1". To enter this menu proceed as follows: - Press MENU and keep it pressed and then press AUTO SET - Press V of channel A UP-DOWN control - Check LCD display: "1.0" flashing - The attenuator is now switched between the 1-2-5 positions - Check if the base line do not jump more than 1,5 subdiv. VAR balance - Press MENU; "1.1" flashing in LCD - Rotate VAR control of channel A and B - Check if the base lines do not jump more than 1 subdiv.

X1/X10 attenuator offset

- Press MENU; "1.2" flashing in LCD
- Check if the base lines do not jump more than 1 subdiv.

NORMAL-INVERT jump

- Press MENU four times; "1.6" flashing in LCD
- Check if the displayed point does not jump more than 1 subdiv.
- Press AUTO SET two times to leave the SERVICE MENU

MEASURING RESULTS ....

11.4.4 TRIGGER VIEW (characteristics section 2.2.2)

---

* SUBJECT: Deflection coefficient via A, B and EXT.

TEST EQUIPMENT: Square-wave calibration generator (PG506)

INPUT SIGNAL: Square-wave signal 1 kHz, amplitude given in table.

TRIG VIEW via A(B)

SETTINGS:

- Apply the square-wave signal to input A(B)
- Press TRIG VIEW (TRIG VIEW and A(B) on)
- Select A(B) as MTB trigger source
- Select DC for MTB trigger coupling

REQUIREMENT:

- Check the amplitude of the TRIG VIEW signal according the table given in section 11.4.3 of this performance check. IMPORTANT: the error limit of the amplitudes displayed via TRIG VIEW is <5%!!

MEASURING RESULTS ....

TRIG VIEW via EXT

INPUT SIGNAL: Square-wave signal 1 kHz, 500 mV to input EXT.

SETTINGS:

- Select EXT DC as MTB trigger source.

REQUIREMENT:

- Check if the square-wave signal displayed via TRIG VIEW has an amplitude of 5 div. (+or- <5%)

MEASURING RESULTS ....

* SUBJECT: Frequency response INT and EXT (TRIGGER VIEW)

TEST EQUIPMENT: Constant amplitude sine-wave generator INT (via A and B)

INPUT VOLTAGE: Constant amplitude sine-wave signal, 120 mV, freq. 50 kHz...50 MHz to input A(B)

SETTINGS:

- Set A(B) to 20 mV/div.
- Adjust the trace height to exactly 6 div.
- Press TRIG VIEW (TRIG VIEW and A on)

		- Select A(B) as MTB trigger source and p-p as MTB trigger coupling - Increase the frequency up to 50 MHz
	REQUIREMENTS	- Check if the vertical deflection via TRIG VIEW is > 4,2 div.
	MEASURING RESULTS	....
		EXT
	INPUT VOLTAGE	Constant amplitude sine-wave signal, 600 mV, freq. 50 kHz...50 MHz to input EXT
	SETTINGS	- Select EXT DC as MTB trigger source - Adjust the trace height to exactly 6 div. - Increase the frequency up to 50 MHz.
	REQUIREMENT	- Check if the vertical deflection via TRIG VIEW is > 4,2 div.
	MEASURING RESULTS	....
*	SUBJECT	Lower -3dB point of trigger view
	TEST EQUIPMENT	LF sine-wave generator
	INPUT VOLTAGE	Sine-wave signal of 10 Hz, 600 mV to input EXT
	SETTINGS	- Select EXT AC as MTB trigger source - Select TRIG VIEW as vertical display mode (TRIG VIEW) - Apply a 10 Hz, 600 mV sine-wave signal to input EXT - Set trigger coupling to DC
	REQUIREMENTS	- Check if the vertical deflection via trig. view > 4,2 div.
	MEASURING RESULTS	....
*	SUBJECT	Line jump trigger source
	TEST EQUIPMENT	-
	INPUT VOLTAGE	-
	SETTINGS	- Press TRIG VIEW (TRIG VIEW and A on) - Press TRIG or X SOURCE four times
	REQUIREMENTS	- Check if A, A and B, B, EXT DC and LINE are displayed in sequence via trigger view and if the jump between base line and the start of the LINE signal is < 2 subdiv.
	MEASURING RESULTS	....

*	SUBJECT	OFFSET of trigger point
	TEST EQUIPMENT	-
	INPUT VOLTAGE	-
	SETTINGS AND REQUIREMENT	- This check must be done in the SERVICE MENU "1°"To enter this menu proceed as follows: - Press MENU and keep it pressed and then press AUTO SET - Press V of channel A UP-DOWN control - Press MENU three times; "1.3" in LCD flashing - Turn Y POS of channel B and set the point in vertical centre of the screen. - Check if the displayed point does not jump more than 1,5 subdiv horizontally - Press MENU; "1.4" in LCD flashing - Turn Y POS of A and set point in the vertical centre - Check if the displayed point does not jump more than 1,5 subdiv. horizontally - Press MENU; "1.5" in LCD flashing - Turn Y POS of B and set point in vertical centre - Check if the displayed point does not jump more than 1,5 subdiv. - Press AUTO SET two times to leave the SERVICE MENU
	MEASURING RESULTS	....

*	SUBJECT	Delay Difference between input A (B) and ext.TRIG VIEW
	TEST EQUIPMENT	Square wave calibration generator. (PG506)- 50 ohm T piece PM9584 and 50 ohm terminator (for EXT)
	INPUT VOLTAGE	Fast-rise input signal 1MHz, 0,5V, ≤1ns via 50 ohm T piece to input A/B and EXT input via 50 ohm terminator
	SETTINGS	- Apply fast-rise input signal to input A and EXT - Press AUTO SET and TRIG VIEW - Press TRIG or X SOURCE for EXT DC triggering - Set of A to 100 mV - Set input coupling A to DC - Press TB MAGN - Set INTENSITY fully clock-wise - Adjust LEVEL MTB so that both signals covers each other - Set MAIN TB to 5ns
	REQUIREMENTS	- Check if delay difference between the two displayed signal slopes is <10 ns (<2 div.)
	MEASURING RESULTS	....

*	SUBJECT	Dynamic Range (EXT input via trigger view)
	TEST EQUIPMENT	Constant amplitude sine-wave generator
	INPUT VOLTAGE	Sine-wave signal of 1 MHz, 2,4 Vpp to input EXT
	SETTINGS	- Press TRIG VIEW (TRIG VIEW and A on) - Select EXT AC as MTB trigger source - Apply sine-wave signal 1 MHz, 2,4 V to input EXT

	- Shift with the MTB LEVEL control the sine-wave signal displayed via TRIG VIEW vertically over the screen.
REQUIREMENT	- Check if the top and bottom of the sine-wave signal can be displayed distortion free (24 div. trace height)
MEASURING RESULTS	....
INPUT VOLTAGE	Sine-wave signal of 50 MHz, 600 mVpp to input EXT
SETTINGS	- Press TRIG VIEW on - Select EXT AC as MTB trigger source - Apply a sine-wave signal of 50 MHz, 600 mV to input EXT.
REQUIREMENT	- Check if a sine-wave signal of 6 div. is displayed distortion-free
MEASURING RESULTS	....

11.4.5 HORIZONTAL DEFLECTION OR X-AXIS
(characteristics section 2.3)

*	SUBJECT	Horizontal Display modes and trace separation
	TEST EQUIPMENT	LF sine-wave generator
	INPUT VOLTAGE	Sine wave signal 2 kHz, 3 div. trace height to input A
	SETTINGS AND REQUIREMENTS	- Press AUTO SET - Set the trace height to 3 div. (MTB trace) - Set the MAIN TB to 0,5 ms/div. - Press TB SELECT - Set the DEL TB to 50 us/div. - Check if intensified part (DTB) is visible and if it can be shifted horizontally by the DTM control - Press TB SELECT - Check if DTB and MTB INTENS are on - Set the MTBI trace on the upper 3 div. - Turn TRACE SEP fully counter clockwise - Check if the bottom/half of the DTB signal can be > 4 div. shifted from the 100% graticule line - Set the MTBI trace on the lower 3 div. - Turn TRACE SEP fully clockwise - Check if the top half of the DTB signal can be > 4 div shifted from the 0% graticule line - Press TB SELECT - Check if only the DTB trace is displayed - Press TB SELECT - Check if only the MTB trace is displayed - Press X DEFL - Check if only X DEFL is on - Select A of MTB trigger source - Check if a line under an angle of 45° is displayed.
	MEASURING RESULTS	....

*	SUBJECT	Deflection coefficient (MTB)
	TEST EQUIPMENT	Time marker generator (TG501)
	INPUT VOLTAGE	Time marker signal 50 ns...0,5 s
	SETTINGS	- Apply a time marker signal of 50 ns to input A - Press AUTO SET
	REQUIREMENT	- Check the deflection coefficients in TB X1 and TB X10 according the table below:

Time marker pulse	MAIN TB setting ../div	Max. coeff. error		Measuring results
		MTB X1	MTB X10 TB MAGN on	
50 ns	50 ns	3%	4%	....
0,1 us	0,1 us	3%	4%	....
0,2 us	0,2 us	3%	4%	....
0,5 us	0,5 us	3%	4%	....
1 us	1 us	3%	4%	....
2 us	2 us	3%	4%	....
5 us	5 us	3%	4%	....
10 us	10 us	3%	4%	....
20 us	20 us	3%	4%	....
50 us	50 us	3%	4%	....
0,1 ms	0,1 ms	3%	4%	....
0,2 ms	0,2 ms	3%	4%	....
0,5 ms	0,5 ms	3%	4%	....
1 ms	1 ms	3%	4%	....
2 ms	2 ms	3%	4%	....
5 ms	5 ms	3%	4%	....
10 ms	10 ms	3%	4%	....
20 ms	20 ms	3%	4%	....
50 ms	50 ms	3%	4%	....
0,1 s	0,1 s	3%	4%	....
0,2 s	0,2 s	3%	4%	....
0,5 s	0,5 s	3%	4%	....

*	SUBJECT	Horizontal position range
	TEST EQUIPMENT	Time marker generator (TG501)
	INPUT VOLTAGE	Time marker signal of 1 ms to input A
	SETTINGS AND REQUIREMENTS	- Set MAIN TB to 0,1 ms/div. - Set a marker pulse on the first and last vertical graticule line - Set X POS fully clockwise. - Check if the first marker pulse is at the right side of the vertical centre line - Set X POS fully anti-clockwise - Check if the last marker pulse is at the left side of the vertical centre line.
	MEASURING RESULTS	....

*	SUBJECT	Variable control ratio (VAR MTB) and TB Magnifier balance
	TEST EQUIPMENT	Time marker generator (TG501)
	INPUT VOLTAGE	Time marker signal 1 us to input A

SETTINGS
- Set MAIN TB to 0,2 us/div; marker on first and sixth graticule line
- Set the MTB VAR fully anti-clockwise

REQUIREMENT
- Check if the VAR control range overlaps the time base steps 0,2 us to 0,5 us; first marker on first graticule line and second marker on the third graticule line or closer to the first marker (2,5:1)

SETTINGS
- Set the MTB VAR control fully clockwise
- Press TB MAGN (on)
- Set the top of the second marker pulse exactly in the vertical centre of the graticule
- Press TB MAGN (off)

REQUIREMENT
- Check if the top of the second marker pulse is not shifted more than 2,5 subdiv.

MEASURING RESULTS ....

* SUBJECT Deflection Coefficients (DTB)

TEST EQUIPMENT Time marker generator (TG501)

INPUT VOLTAGE Time marker signal 1 ms...50 ns to input A

SETTINGS
- Press AUTO SET
- Press TB SELECT; MTBI and DTB on
- Set MAIN TB to 2 ms/div.
- Set DEL'D TB to 1 ms/div.
- Press DTB TRIG for STARTS mode
- Set the delay time to 5.000 ms by means of the DTM control.

REQUIREMENTS
- Check the deflection coefficients in TB x 1 and TB x 10 according the table below:

ATTENTION: To check the DTB time coefficients according the table below the uS of UP-DOWN MTB control must be operated (DTB setting is electrically coupled with MTB setting)

MAIN TB setting	Time marker pulse	DEL'D TB setting ../div.	Max.coeff.error MTB X1	Max.coeff.error MTB X10	Measuring results
2 ms	1 ms	1 ms	3%	4%	....
1 ms	0,5 ms	0,5 ms	3%	4%	....
0,5 ms	0,2 ms	0,2 ms	3%	4%	....
0,2 ms	0,1 ms	0,1 ms	3%	4%	....
0,1 ms	50 us	50 us	3%	4%	....
50 us	20 us	20 us	3%	4%	....
20 us	10 us	10 us	3%	4%	....
10 us	5 us	5 us	3%	4%	....
5 us	2 us	2 us	3%	4%	....
2 us	1 us	1 us	3%	4%	....
1 us	0,5 us	0,5 us	3%	4%	....
0,5 us	0,2 us	0,2 us	3%	4%	....
0,2 us	0,1 us	0,1 us	3%	4%	....
0,1 us	50 ns	50 ns	3%	4%	....

*	SUBJECT	Delay Time Multiplier
	TEST EQUIPMENT	Time marker generator (TG501)
	INPUT VOLTAGE	Time marker signal 10 us to input A
	SETTINGS AND REQUIREMENTS	- Press TB SELECT; MTB INTENS and DTB on - Set MAIN TB to 5 us/div - Set DEL'D TB to 0,5 us/div. - Press DTM <-- (delay time: 0) - Check if the first marker pulse displayed via the DTB is partly visible; - Set the first marker displayed via the MTB exactly on the first graticule line - Press DTM --> so that the last marker pulse displayed via the DTB is completely visible on the first vertical graticule line. - Check if the Delay Time displayed in the LCD is >48 us.
	MEASURING RESULTS	....

*	SUBJECT	Maximum Jitter (DTB)
	TEST EQUIPMENT	Sine-wave generator
	INPUT SIGNAL	Sine-wave signal (1 MHz), 6 div. trace height to input A.
	SETTINGS	- Set the trace height to 6 div. - Set MAIN TB to 1 ms - Press TB SELECT; MTBI and DTB on - Set DEL'D TB to 0,5 us - Set the DELAY time to 5 ms - Press TB SELECT; only DTB on
	REQUIREMENT	- Check if the jitter of the DTB trace is $\leq$ 1 div (1 part per 20.000)
	MEASURING RESULTS	....

*	SUBJECT	Horizontal Deflection coefficients
	TEST EQUIPMENT	Sine wave generator
	INPUT VOLTAGE	Sine wave signal 2 kHz, 4 div. trace height to input A
	SETTINGS	- Press EXT X DEFL - Press A/B twice for only ch. B display - Select A as X DEFL source with TRIG or X SOURCE
	REQUIREMENT	- Check if a horizontal line of 4 div. is displayed (+or- 5%).
	INPUT VOLTAGE	- Sine wave signal 2 kHz, 1 V to input EXT
	SETTINGS AND REQUIREMENTS	- Select EXT with TRIG or X SOURCE - Press X DEFL - Check if a horizontal line of 10 div. (+or- 5%) is displayed. - Select LINE with TRIG or X SOURCE - Check if a horizontal line is displayed of approx 6 div. (at 220 V mains voltage)
	MEASURING RESULTS	....

*	SUBJECT	Frequency response (horizontal)
	TEST EQUIPMENT	Constant amplitude sine-wave generator (PG506)
	INPUT VOLTAGE	Constant amplitude sine-wave signal, 30 mV, 50 kHz...2 MHz to input A
	SETTINGS	- Set A to 5 mV/div - Apply a 50 kHz sine-wave signal to input A - Set input coupling A to DC - Press X DEFL - Select A as horizontal deflection source with TRIG or X SOURCE - Press A/B twice for ch. B as vertical deflection - Adjust the input voltage for exactly 6 div. horizontal deflection - Increase the frequency of the input signal up to 2 MHz
	REQUIREMENTS	- Check if the trace width is > 4,2 div. (-3 dB) over the complete bandwidth range.
	MEASURING RESULTS	....
	TEST EQUIPMENT	LF Sine-wave generator
	INPUT VOLTAGE	Sine-wave signal, 10 Hz, 6 div. trace height to input A
	SETTINGS	- Set the vertical deflection of A to exactly 6 div - Select X DEFL and A as X DEFL source - Set input coupling A to AC - Press A/B twice for ch. B as vertical deflection
	REQUIREMENT	- Trace width is > 4,2 div (-3 dB)
	MEASURING RESULTS	....
*	SUBJECT	Maximum phase shift between horizontal and vertical deflection.
	TEST EQUIPMENT	LF sine-wave generator
	INPUT VOLTAGE	Sine wave signal, 2 kHz...100 kHz, trace height 6 div.
	SETTINGS	- Press X DEFL - Select A for horizontal deflection with TRIG or X SOURCE - Set the trace height to exactly 6 div. - Increase the input frequency up to 100 kHz.
	REQUIREMENT	- Check if the phase shift < 3° (see fig. below)

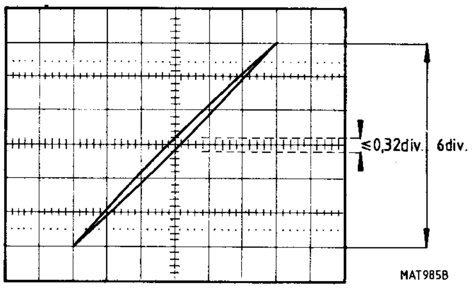

MEASURING RESULTS ....

11.4.6 MTB TRIGGERING (characteristics, section 2.4.1)

*	SUBJECT	MTB Trigger Sources and trigger coupling
	TEST EQUIPMENT	Square-wave generator
	INPUT VOLTAGE	Square-wave signal 2 kHz, 4 div. trace height to input A (EXT)
	SETTINGS AND REQUIREMENTS	- Set the trace height to 4 div. - Press TRIG VIEW (A and TRIG VIEW on) - Press TRIG COUPL and select DC - Adjust LEVEL MTB for a triggered signal - Check if two square wave signals are displayed of 4 div. (Trigger view and A) - Press TRIG COUPL and select p-p - Turn LEVEL MTB and check if the signal is triggered over the complete level range. - Connect CAL signal to input B - Press A/B so that A, B and TRIG VIEW are on - Set B to 200 mV. - Select B as MTB trigger source with TRIG or X SOURCE (A is not triggered) - Check if a square wave of 6 div. is displayed - Increase the freq. of the square-wave signal to input A up to 20 kHz (CAL signal to B) - Press TRIG or X SOURCE four times (A and B selected.) - Check if three well triggered traces are displayed; TRIG VIEW signal derived from A. - Remove input signals - Apply a square wave signal of 500 mV to input EXT - Select EXT as MTB trigger source with TRIG or X SOURCE - Check if a square wave signal is displayed via TRIG VIEW of 5 div. - Select LINE as MTB trigger source with TRIG or X SOURCE - Set MAIN TB to 5 ms/div - Check if a sine-wave signal (mains frequency) is displayed.
	MEASURING RESULTS	....
*	SUBJECT	MTB Slope selection and Level control range.
	TEST EQUIPMENT	LF Sine-wave generator
	INPUT VOLTAGE	Sine-wave signal 2 kHz - 800 mV to input A(B) (EXT)
	SETTINGS AND REQUIREMENTS	- Set A(B) to 0,1 V/div (DC input coupling) - Press TRIG COUPL for p-p triggering - Turn LEVEL MTB fully clockwise and fully anti-clockwise - Check if the signal is well triggered over the complete LEVEL range - Set the LEVEL MTB control in its mid-position - Start of signal display must be in the vertical centre - Press TB TRIG (TRIG mode)

- Press SLOPE MTB
- Check if the sine-wave signal is inverted and is triggered on the negative slope.
- Press SLOPE MTB once again
- Press TRIG COUPL for DC coupling
- Set A(B) to 50 mV/div (16 div. trace height)
- Turn the LEVEL MTB
- Check if the LEVEL range is > +or- 8 div. and if the signal is triggered on the positive slope.
- Remove input signal
- Apply the sine-wave signal of 2 kHz, 1,6 Vpp to EXT
- Select EXT (MTB trigger source)
- Press TRIG VIEW. (TRIG VIEW and A(B) on)
- Turn the LEVEL MTB
- Check if the LEVEL range is > +or- 0,8 V (+or- 8 div.)

MEASURING RESULTS ....

* SUBJECT Trigger Sensitivity (MTB)

TEST EQUIPMENT Sine-wave generator (SG503)

INPUT VOLTAGE Sine-wave signal 10 MHz-(50 MHz)-(100 MHz) to input A (B) (EXT)

SETTINGS AND REQUIREMENTS

- Press AC/DC (input coupling of A(B) to DC)
- Press TB TRIG MODE for TRIG mode
- Press TRIG COUPL for DC trigger coupling
- Apply a sine-wave signal of 10 MHz approx. 250 mVpp to input A(B)
- Set A(B) to 0,2 V/div.
- Decrease amplitude of input signal
- Turn LEVEL MTB
- Check if the signal is well-triggered at amplitudes ≥ 0,5 div.
- Decrease the frequency of the input signal to 50 kHz
- Check if the signal stays well triggered at amplitudes ≥0,5 div.
- Increase the frequency of the input signal up to 50 MHz.
- Increase amplitude of input signal to approx 1 div.
- Turn LEVEL MTB
- Check if the signal is well-triggered at amplitudes ≥ 1 div.
- Increase the frequency of the input signal up to 100 MHz
- Increase amplitude to approx 3 div.
- Check if the signal is well-triggered at amplitudes ≥ 3 div.
- Remove input signal
- Apply a sine wave signal of 100 MHz, 500 mVpp to input EXT (via external 50 Ohm terminator)
- Select EXT (MTB trigger source) with TRIG or X SOURCE
- Press TRIG VIEW, (TRIG VIEW and A(B) on).
- Turn LEVEL MTB

		- Check if a well triggered sine-wave of 5 div. (500 mV) is displayed (adjust LEVEL MTB). - Decrease the frequency of the input signal to 50 MHz and the amplitude to 150 mV - Check if the signal is well triggered (adjust LEVEL MTB) - Decrease the frequency of the input signal to 10 MHz or lower - Decrease the amplitude to 50 mV - Check if the signal is well-triggered (adjust LEVEL MTB).
	MEASURING RESULTS	....
*	SUBJECT	Trigger sensitivity TVL-TVF
	TEST EQUIPMENT	TV pattern generator with video output (PM5518)
	INPUT VOLTAGE	Video signal to input A (B)
	SETTINGS	- Press TB TRIG mode for TRIG mode - Press AC/DC for DC input coupling - Apply a video signal to input A(B) with an amplitude of 0,7 div. sync. pulse amplitude - Press TRIG COUPL for TVL and TVF
	REQUIREMENTS	- Check for a stable triggering on TVL and TVF at sync. amplitudes of >0,7 div.
	MEASURING RESULTS	....

11.4.7 DTB TRIGGERING (characteristics, section 2.4.2)

*	SUBJECT	DTB Trigger sources and trigger coupling
	TEST EQUIPMENT	Square-wave generator
	INPUT VOLTAGE	Square-wave signal 1 kHz, 4 div. trace height to input A(B) (EXT)
	SETTINGS AND REQUIREMENTS	- Set A(B) to 0,2V/div. - Press TB SELECT to select MTBI - Press DTB TRIG to select STARTS mode - Set MTB to 0,5 ms/div - Set DTB to 50 us/div - Set the delay to 2 ms with the DTM control - Turn LEVEL DTB - Check if the intensified part stays triggered and starts on the fifth vertical line - Press DTB to select A(B) - Check if the delay time is given in div. (4 div) - Turn LEVEL DTB - Check that in the extreme positions of the LEVEL control the DTB is not triggered. - Press TRIG DTB; check if A and B in composite are selected (DTB stays triggered) - Press TRIG DTB; check if B is selected as trigger source (DTB not triggered) - Press TRIG DTB; check if DTB is triggered via EXT (input signal also to input EXT) - Press TRIG DTB 3 times; check if A is selected
	MEASURING RESULTS	....

*	SUBJECT	DTB Trigger Sensitivity
	TEST EQUIPMENT	Sine-wave generator (SG503)
	INPUT VOLTAGE	Sine-wave signal 10 MHz (50 MHz) (100 MHz) to input A(B) (EXT)
	SETTINGS AND REQUIREMENTS	- Press TB SELECT; select MTBI - Press DTB TRIG; select A(B) as trigger source - Set MAIN B to 0,5 us/div - Set DEL'D TB to 50 ns/div - Turn LEVEL DTB to get a well triggered intensified part - Check the DTB trigger sensitivity according the procedure given in section 6.3 * The EXT trigger sensitivity must be checked via channel A (input signal to EXT and A) * Read DTB instead of MTB
	MEASURING RESULTS	....

*	SUBJECT	DTB Slope selection and Level control range
	TEST EQUIPMENT	LF Sine-wave generator
	INPUT VOLTAGE	Sine-wave signal 2 kHz - 800 mVpp to input A(B) (EXT)
	SETTINGS AND REQUIREMENTS	- Set A(B) to 0,1 mV/div (8 div) - Select MTBI with TB SELECT - Set MAIN TB to 0,2 ms /div and DEL'D TB to 5 us/div. - Press DTB TRIG: source A(B) - Turn LEVEL DTB for a well triggered intensified part. - Press SLOPE DTB - Check if the intensified part is on the negative slope. - Press SLOPE DTB (positive triggering) - Set DEL'D TB to 0,1 ms/div. - Set A(B) to 50 mV/div. - Turn LEVEL DTB - Check if the LEVEL DTB range is > +or- 8 div.
	MEASURING RESULTS	....

11.4.8 AUXILIARY INPUTS AND OUTPUTS

*	SUBJECT	Z-MOD Sensitivity
	TEST EQUIPMENT	Square-wave generator
	INPUT VOLTAGE	Square-wave signal, 1 kHz, duty cycle 50%, amplitude 0...2,5 Vpp to input A and Z-in (rear side)
	SETTINGS AND REQUIREMENTS	- Set MAIN TB to 0,5 ms/div. - Set the trace of A in mid-position - Select DC for channel A Input coupling - Apply square-wave signal of 2,5 Vpp, 1 kHz to input A and Z-in. (base line 0 V) - Check if only the bottom half of the square wave signal is displayed (500 us blanking and 500 us unblanking) - Decrease the amplitude of the input signal to 1 Vpp. - Set A to 0,5 V/div. - Check if the top half of the square-wave signal is visible with a lower intensity and will be completely unblanked at an input voltage of < 0,8 V
	MEASURING RESULTS	....

*	SUBJECT	CAL Frequency and output voltage
	TEST EQUIPMENT	-
	INPUT VOLTAGE	CAL output signal to input A
	SETTINGS	- Press GND of channel A - Set the trace in the centre of the screen - Press GND of channel A - Select DC of A input coupling
	REQUIREMENTS	- Check if a positive going square wave signal is displayed of 1,2Vpp, frequency 2 kHz
	MEASURING RESULTS	....

12. DISMANTLING THE INSTRUMENT

12.1 GENERAL INFORMATION

This section provides the dismantling procedures required for the removal of components during repair operations.
All circuit boards removed from the instrument must be adequately protected against damage, and all normal precautions regarding the use of tools must be observed.
During the dismantling a careful note must be made of all disconnected leads so that they can be reconnected to their correct terminals during assembly.

CAUTION: Damage may result if:

- The instrument is switched-on when a circuit board has been removed.
- a circuit board is removed within one minute after switching-off the instrument.

12.2 REMOVING THE TOP AND BOTTOM COVERS

The instrument is protected by two covers: a top cover and a bottom cover. To remove these covers, proceed as follows:

- Slacken the two screws that secure both covers, located at the rear of the instrument.
- Gently push each cover backwards until it can be lifted.
- The covers can be removed by lifting them clear of the instrument.

12.3 ACCESS TO PARTS FOR THE CHECKING AND ADJUSTING PROCEDURES

After removing both covers (section 12.2) almost all adjustment and measuring points are accessible. However, for access to the adjusting elements of the time-base unit and the pre-amplifier unit first loosen the upper time-base unit and vertically fix this unit in the available p.c.b. guide fixing.

If necessary, the power supply unit can be lifted out of the instrument To do so, proceed as follows:

- Push both parts at the back of the extension shaft towards each other so that the extension shaft can easily be loosened from the ON/OFF switch on the power supply unit.
- Remove the complete extension shaft.
- Push both lips that secure the power supply unit sidewards and gently lift this unit out of the instrument.
- Fix the power supply unit in the available p.c.b. guide fixing.

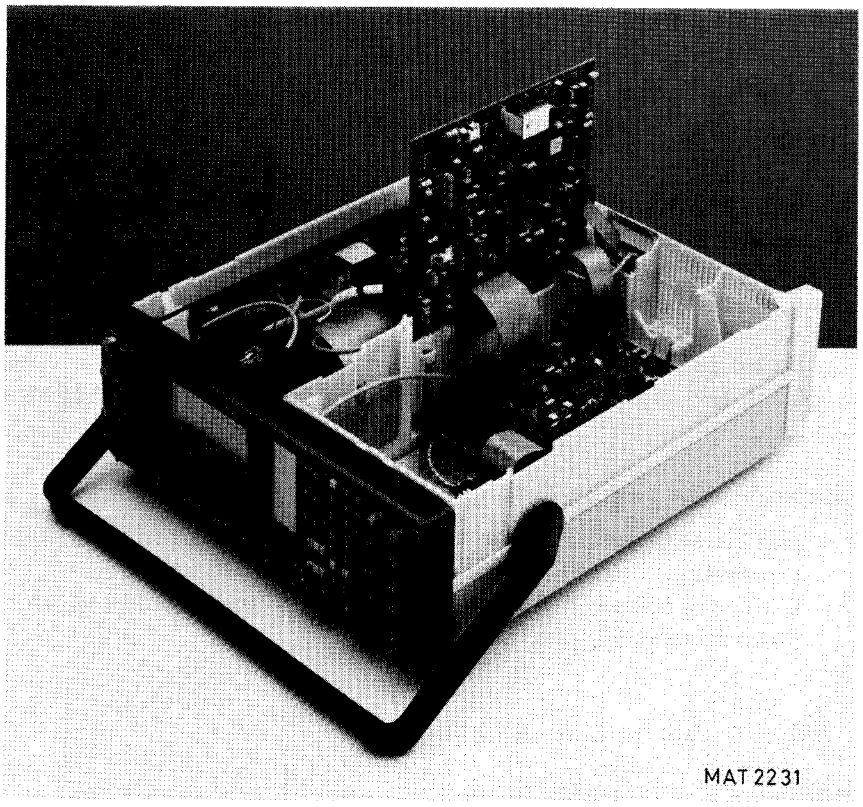

Figure 12.1 Access to all parts for checking and adjusting

NOTE: For checking and adjusting the instrument it is not necessary to remove the bottom cover.

13. CHECKING AND ADJUSTING

13.1 GENERAL INFORMATION

The following information provides the complete checking and adjusting procedure for the instrument. As various control functions are interdependent, a certain order of adjustment is necessary.
The procedure is, therefore, presented in a sequence which is best suited to this order, cross-reference being made to any circuit which may affect a particular adjustment.
Before any check or adjustment, the instrument must attain its normal operating temperature.

- Warming-up time under average conditions is 30 minutes.
- Where possible, instrument performance should be checked before any adjustment is made.
- All limits and tolerances given in this section are calibration guides, and should not be interpreted as instrument specifications unless they are also published in section 2.
- Tolerances given are for the instrument under test and do not include test equipment error.
- The most accurate display adjustments are made with a stable, well-focused low intensity display.
- All controls that are mentioned without item numbers are located on the outside of the instrument.

WARNING: The opening of covers or removal of parts, except those to which access can be gained by hand, is likely to expose live parts, and also accessible terminals may be live.
The instrument shall be disconnected from all voltage sources before any adjustment, replacement or maintenance and repair during which the instrument will be opened.
If afterwards any adjustment, maintenance or repair of the opened instrument under voltage is inevitable, it shall be carried out only by qualified person who is aware of the hazard involved.
Bear in mind that capacitors inside the instrument may still be charged even if the instrument has been separated from all voltage sources.

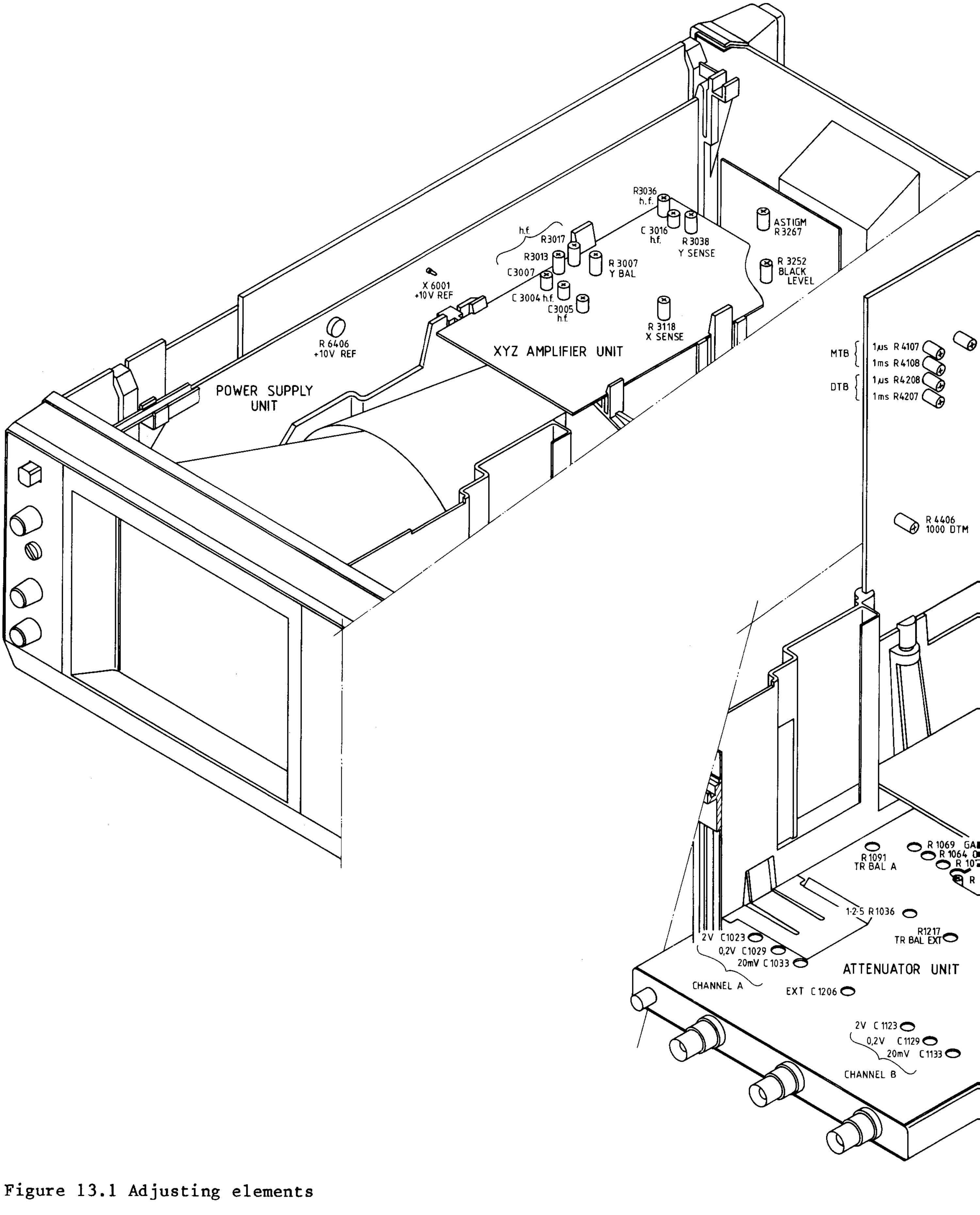
R3036
h.f.
C 3016
h.f.
R 3038
Y SENSE
ASTIGM
R 3267
h.f.
R3017
R3013
R 3007
Y BAL
C3007
X 6001
+10V REF
C 3004 h.f.
C3005
h.f.
R 3252
BLACK
LEVEL
R 3118
X SENSE
R 6406
+10V REF
XYZ AMPLIFIER UNIT
POWER SUPPLY
UNIT
MTB
1µs R 4107
1ms R 4108
DTB
1µs R4208
1ms R4207
R 4406
1000 DTM
R 1069 GA
R 1064 0
R 10
R
R 1091
TR BAL A
1-2-5 R1036
R1217
TR BAL EXT
2V C1023
0,2V C1029
20mV C 1033
CHANNEL A
ATTENUATOR UNIT
EXT C 1206
2V C 1123
0,2V C1129
20mV C1133
CHANNEL B

Figure 13.1 Adjusting elements

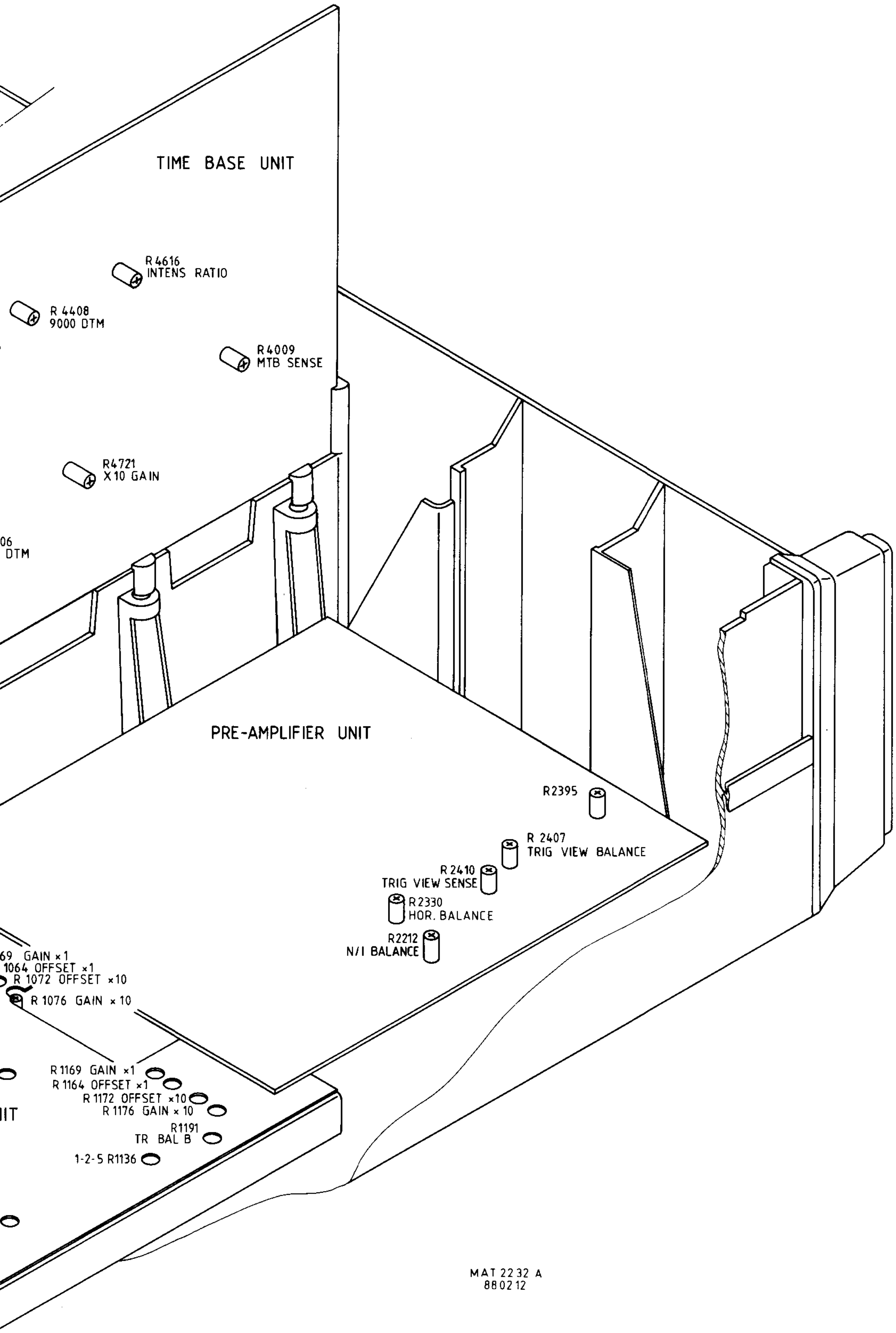
TIME BASE UNIT
R 4616
INTENS RATIO
R 4408
9000 DTM
R 4009
MTB SENSE
R4721
X10 GAIN
06
DTM
PRE-AMPLIFIER UNIT
R2395
R 2407
TRIG VIEW BALANCE
R 2410
TRIG VIEW SENSE
R2330
HOR. BALANCE
R2212
N/I BALANCE
69 GAIN ×1
1064 OFFSET ×1
R 1072 OFFSET ×10
R 1076 GAIN ×10
R 1169 GAIN ×1
R 1164 OFFSET ×1
R 1172 OFFSET ×10
R 1176 GAIN × 10
R1191
TR BAL B
1-2-5 R1136
IIT
MAT 2232 A
880212

13.2 RECOMMENDED TEST AND CALIBRATION EQUIPMENT

Type of instrument	Required specification	Example of recommended instrument
Function generator	Freq.: 1 MHz ... 10 MHz Sine-wave/Square-wave Ampl.0...20 Vpp DC offset 0...±5 V Rise-time <30 ns Duty cycle 50 %	Philips PM5134
Constant amplitude sine-wave generator	Freq.: 100 kHz ... 50 MHz Constant ampl. of 120 mVpp and 3 Vpp	Tektronix SG 503
Square-wave calibration generator	For ampl. calibration: Freq.: 1 kHz Ampl.: 10 mV ... 50 V For rise-time measurements: Freq.: 1 MHz Ampl.: 10 mV ... 500 mV Rise-time:≤1 ns	Tektronix PG 506
Time-marker generator	Repetition rate: 0,5 s ... 0,05 /us	Tektronix TG 501
Digital multimeter	Wide voltage, current and resistance ranges. Required accuracy 0,1 %	Philips PM2524 and high-voltage probe PM9246
Oscilloscope	The bandwidth must be the same or higher than the bandwidth of the instrument under test.	Philips PM3055
Variable mains transformer	Well-insulated output voltage 90...264 Vac	Philips ord.number 2422 529 00005
Moving-iron meter		
Dummy probe 2:1	1 Megohm ±0,1 %//20 pF	
Cables, T-piece, terminations for the generators	General Radio types for fast rise-time square-wave and high freq. sine-wave. BNC-types for other applications	
Trimming tool		Philips 800NTX kit (ord. number 4822 310 50015)

13.2 RECOMMENDED TEST AND CALIBRATION EQUIPMENT

Type of instrument	Required specification	Example of recommended instrument
Function generator	Freq.: 1 MHz ... 10 MHz Sine-wave/Square-wave Ampl.0...20 Vpp DC offset 0...±5 V Rise-time <30 ns Duty cycle 50 %	Philips PM5134
Constant amplitude sine-wave generator	Freq.: 100 kHz ... 50 MHz Constant ampl. of 120 mVpp and 3 Vpp	Tektronix SG 503
Square-wave calibration generator	For ampl. calibration: Freq.: 1 kHz Ampl.: 10 mV ... 50 V For rise-time measurements: Freq.: 1 MHz Ampl.: 10 mV ... 500 mV Rise-time: ≤1 ns	Tektronix PG 506
Time-marker generator	Repetition rate: 0,5 s ... 0,05 µs	Tektronix TG 501
Digital multimeter	Wide voltage, current and resistance ranges. Required accuracy 0,1 %	Philips PM2524 and high-voltage probe PM9246
Oscilloscope	The bandwidth must be the same or higher than the bandwidth of the instrument under test.	Philips PM3055
Variable mains transformer	Well-insulated output voltage 90...264 Vac	Philips ord.number 2422 529 00005
Moving-iron meter		
Dummy probe 2:1	1 Megohm ±0,1 %//20 pF	
Cables, T-piece, terminations for the generators	General Radio types for fast rise-time square-wave and high freq. sine-wave. BNC-types for other applications	
Trimming tool		Philips 800NTX kit (ord. number 4822 310 50015)

13.3 SURVEY OF ADJUSTING ELEMENTS

ADJUSTING ELEMENT	ADJUSTMENT	INPUT SIGNAL	SECTION
R6406	supply voltage +10 VREF	-	13.4.2
R3252	black level	-	13.4.3
R3267	astigmatism	Sine-wave 120 mV-1 kHz	13.4.3
R4616	intens ratio	-	13.4.3
C1033	1.f.square wave response ch.A at 20 mV	square-wave 120 mV - 1 kHz	13.4.4
C1029	1.f.square wave response ch.A at 0,2 V	square-wave 1,2 V - 1 kHz	13.4.4
C1023	1.f. square wave response ch.A at 2 V	sqare-wave 12 V - 1 kHz	13.4.4
C1133	1.f. square wave response ch.B at 20 mV	square-wave 120 mV - 1 kHz	13.4.4
C1129	1.f. square wave response ch.B at 0,2 V	square-wave 1,2 V - 1 kHz	13.4.4
C1123	1.f. square wave response ch.B at 2 V	square-wave 12 V - 1 kHz	13.4.4
C1206	1.f. square wave response EXT	square-wave 600 mV - 1 kHz	13.4.4
R2410	trig.view sensitivity	square wave 100 mV - 1 kHz	13.4.5
R3038	vertical sensitivity	square-wave 600 mV - 1 kHz	13.4.5
R1069	gain x1 ch.A	square-wave 100 mV - 1 kHz	13.4.5
R1169	gain x1 ch.B	square-wave 100 mV - 1 kHz	13.4.5
R1076	gain x10 ch.A	square-wave 10 mV - 1 kHz	13.4.5
R1176	gain x10 ch.B	square-wave 10 mV - 1 kHz	13.4.5
R3118	horizontal sensitivity	square-wave 100 mV - 1 kHz	13.4.6

ADJUSTING ELEMENT	ADJUSTMENT	INPUT SIGNAL	SECTION
R1036-R1136	offset ch.A (ch.B)	-	13.4.7
R1064-R1164	offset x1 ch.A (ch.B)	-	13.4.7
R1072-R1172	offset x10 ch.A (ch.B)	-	13.4.7
R2330	horizontal balance	-	13.4.7
R1091	trigger balance ch.A	-	13.4.7
R1191	trigger balance ch.B	-	13.4.7
R1217	trigger balance EXT	-	13.4.7
R2212	norm/invert balance	-	13.4.7
R2407	trig view balance	-	13.4.7
R3007	vertical balance	-	13.4.7
R4009	sensitivity MTB	Sine-wave 80 mV - 10 kHz	13.4.8
R4108	MTB gain 1 ms	time marker 1 ms	13.4.9
R4107	MTB gain 1 us	time marker 1 us	13.4.9
R4207	DTB gain 1 ms	time marker 1 ms	13.4.10
R4208	DTB gain 1 us	time marker 1 us	13.4.10
R4721	gain x10 MAGN	time marker 100 us	13.4.11
R4406-R4408	offset-gain DTM	-	13.4.12
R3017	h.f. square-wave response	square-wave 120 mV - 1 MHz rise-time ≤1 ns	13.4.13
R3013			13.4.13
C3007			13.4.13
C3004			13.4.13
C3005			13.4.13
C3036			13.4.13
C3016			13.4.13

13.4 CHECKING AND ADJUSTING PROCEDURE

The adjusting elements and measuring points are given in figure 13.1.

NOTE: Use always an insulated adjustment tool.

13.4.1 Preparation

Before starting the checking and adjusting procedure, it is necessary to be aware of the following.

- Unless otherwise indicated, the MAIN TB must be triggered on the channel that is selected for vertical display and the trigger path is P-P coupled. The MAIN TB must function in the AUTO mode and its sweep speed must be adjusted to give good display of the phenomena of interest. The DEL'D TB is not used. The INTENS and FOCUS control must be adjusted to a well-defined trace display.
- Preliminary setting of the controls:
  All VAR controls must be set in CAL position
  All POS and LEVEL controls must be set in mid-position.
  The HOLD OFF control must be set to MIN position.
- Take care to remove the input voltage after each section.

For better access to the adjusting elements on the time base unit and the power supply unit, proceed as indicated in section 12.3.

ATTENTION: Do not readjust potentiometer R2395, situated on the Pre-amplifier unit. However, if this potentiometer is inadvertently turned, proceed as follows:
- Set R2395 in its mid-position.
- Readjust R4009 according to section 13.4.8.

13.4.2 Power supply adjustment

- Connect the instrument to the mains voltage and switch on the oscilloscope.
- Connect a digital multimeter to connection point X6001 (+10V REF) on the power supply unit and the instrument's ground.
- Adjust R6406 so that the supply voltage is exactly +10 V (tolerance: +or- 0,01 V).

13.4.3 CRT display adjustment

Black level:

- Press X DEFL key
- Set the INTENS control to 10° from its left hand stop.
- Adjust R3252 so that the spot is just not visible.

Trace rotation:

- Press X DEFL key again for deflection via MTB.
- Adjust the front-panel TRACE ROTATION control so that the trace runs exactly in parallel with the horizontal graticule lines.

Astigmatism:

- Apply a 120 mV/1 kHz sine-wave signal to input A.
- Press AUTO SET key.
- Set the INTENS control for normal brightness.
- Adjust R3267 (and the FOCUS control) so that the trace is sharp and well-defined over the whole screen area.

Intens ratio:

- Press TB SELECT key for MTBI.
- Set UP-DOWN MTB to 5 microsec.
- Set UP-DOWN DTB to 1 microsec.
- Set the INTENS control so that the DTB part of the trace is clearly visible.
- Adjust R4616 for a normal visible MTB trace. The DTB part of the trace must be well distinguished from the MTB trace.

13.4.4 Square-wave response attenuator

Channels A and B:

The vertical adjustments of channels A and B are identical.
The indication for channel B are shown in brackets behind those of channel A. It is advisable to perform first the channel A adjustments in this section.

- Apply a calibrated square-wave signal, frequency 1 kHz to input A (B).
- Press AUTO SET key.
- Press AC/DC key ch.A (ch.B) for DC input coupling.
- Set the adjusting elements for a straight pulse top with a maximum pulse top error of + or - 1,5 % (see table below).

INPUT SIGNAL YA (YB)	UP-DOWN ch.A (ch.B)	Adjusting element
120 mV	20 mV	C1033 (C1133)
1,2 V	0,2 V	C1029 (C1129)
12 V	2 V	C1023 (C1123)

External amplifier:

- Apply a 600 mV/1 kHz calibrated square-wave signal to input EXT.
- Press AUTO SET key.
- Press TRIG VIEW key for TRIG.VIEW.
- Press A/B key for only TRIG VIEW display.
- Press TRIG or X SOURCE key for EXT source.
- Press EXT AC/DC key for DC input coupling.
- Adjust C1206 for a straight pulse top with a maximum pulse top error of + or - 1,5 %.

13.4.5 Adjustment of vertical sensitivities

Trigger view sensitivity:

- Apply a 100 mV/1 kHz calibrated square-wave signal to input A.
- Press AUTO SET key.
- Set UP/DOWN ch.A to 20 mV.
- Press AC/DC key ch.A for DC input coupling
- Press TRIG coupl. key for DC trigger coupling
- Press TRIG VIEW key.
- Adjust R2410 so that both signals are identical.

Sensitivity final Y-amplifier

- Apply a 600 mV/1 kHz calibrated square-wave signal to input EXT.
- Press TRIG VIEW key.
- Press A/B key for only TRIG VIEW display.
- Press TRIG or X SOURCE key for EXT source.
- Press EXT AC/DC key for DC input coupling.

- Press TRIG coupl. key for DC trigger coupling
- Adjust R3038 for a vertical display of exactly 6 divisions.

NOTE: The vertical position can be adjusted by the MTB LEVEL control.

Gain adjustment channel A (B).

The vertical adjustments of channels A and B are identical.
The indications for channel B are shown in brackets after those of channel A. It is advisable to perform first the channel A adjustments in this section.

- Apply a 100 mV/1 kHz calibrated square-wave signal to input A (B).
- Press AUTO SET key.
- Set UP-DOWN ch.A (ch.B) to 20 mV.
- Press AC/DC key ch.A (ch.B) for DC input coupling.
- Adjust R1065 (R1165) for a vertical display of exactly 5 divisions.
- Apply a 10 mV/1 kHz calibrated square-wave signal to input A (B).
- Press AUTO SET key.
- Set UP-DOWN ch.A (ch.B) to 2 mV.
- Press AC/DC key ch.A (ch.B) for DC input coupling.
- Adjust R1076 (R1176) for a vertical display of exactly 5 divisions.

13.4.6 Adjustment of horizontal sensitivity

- Apply a 100 mV/1 kHz calibrated square-wave signal to input B.
- Press AUTO SET key.
- Press AC/DC key ch. B for DC input coupling.
- Press X DEFL key.
- Press A/B key for channel A selection.
- Set UP-DOWN ch.B to 20 mV.
- Adjust R3118 for a trace width of exactly 5 divisions.

13.4.7 Offset adjustments

The adjustment in this Section are performed in SERVICE MENU "1".
To enter this service menu, proceed as follows:

- Press MENU key.
- Keep MENU key pressed and press also AUTO SET key.
- Check LCD displays: "1", "2" and "3".
- Press V-ch.A (c.i. the left side of the channel A UP-DOWN control).
- Check LCD displays: "1.0".
- Each adjustment procedure can now be sequentially selected by pressing the MENU key. The LCD will indicate which order is selected (1.0...1.8).
- Adjust the potentiometers for minimum trace jump.

MEASURING	ADJUSTMENT	POTENTIOMETER	REMARKS
1.0	1-2-5 adjustment	R1036 (R1136)	
1.1	x1 continue	R1064 (R1164)	rotate VAR A (B)
1.2	x1/x10 offset	R1072 (R1172)	
1.3	trig. balance A	R1091	
1.4	trig. balance B	R1191	
1.5	trig. balance EXT	R1217	
1.6	NORM/INV.	R2212	
1.7	trig.view balance	R2407	
	Y balance	R3007	line in centre of screen.
1.8	DTM 1000-9000	R4406-R4408	see also section 13.4.13

- Press AUTO SET key twice to leave the service menu again.

Horizontal balance:

- Press MENU key.
- Press AUTO SET key.
- Set starting point of the trace to the first vertical graticule line.
- Press X DEFL key.
- Adjust R2330 so that the point is in the centre of the screen.

13.4.8 Adjustment of trigger sensitivity

- Apply a 80 mV/10 kHz sine-wave signal to input A
- Press AUTO SET key.
- Set UP-DOWN ch.A to 0,2 V.
- Set UP-DOWN MTB to 0,1 msec.
- Ensure that the trace height is exactly 0,4 division.
- Adjust R4009 for a well triggered display.

13.4.9 Adjustment of the MTB sweep times

Adjustment of 1 msec:

- Apply a 1 msec time marker signal to input A.
- Press AUTO SET key
- Set UP-DOWN MTB to 1 msec.
- Adjust R4108 and the X POS control so that the 2nd and 10th marker pulses coincide exactly with the 2nd and 10th vertical graticule lines.

Adjustment of 1 microsec:

- Change the time marker signal to 1 microsec.
- Set UP-DOWN MTB to 1 microsec.
- Adjust R4107 and manipulate the X POS control so that the 2nd and 10th marker pulses coincide exactly with the 2nd and 10th vertical graticule lines.

13.4.10 Adjustment of the DTB sweep times

Adjustment of 1 msec:

- Apply a 1 msec time marker signal to input A.
- Press AUTO SET key.
- Set UP-DOWN MTB to 2 msec.
- Press TB SELECT key for DTB-mode.
- Set UP-DOWN DTB to 1 msec.
- Adjust R4207 and the X POS control so that the 2nd and 10th marker pulses coincide exactly with the 2nd and 10th vertical graticule lines.

Adjustment of 1 microsec:

- Change the time marker signal to 1 microsec.
- Press AUTO SET key.
- Set UP-DOWN MTB to 2 microsec.
- Press TB SELECT key for DTB-mode.
- Set UP-DOWN DTB to 1 microsec.
- Adjust R4208 and the X POS control so that the 2nd and 10th marker pulses coincide exactly with the 2nd and 10th vertical graticule lines.

13.4.11 Adjustment of x10 sweep times

Adjustment of 100 microsec:

- Apply a 100 microsec. time marker signal to input A.
- Press AUTO SET key.
- Set UP-DOWN MTB to 1 msec.
- Press TB MAGN key for x10 magnification.
- Ensure that the LCD gives a 0,1 ms display.
- Adjust R4721 and the X POS control so that the 2nd and 10th marker pulses coincide exactly with the 2nd and 10th vertical graticule lines. This must be valid over 10 % to 90 % of the total X-deflection range.

13.4.12 Adjustment of delay time multiplier

The delay time multiplier adjustment can be performed with SERVICE MENU "1", measuring point 1.8 (see section 13.4.7)

- Set the start of the trace exactly on the first vertical graticule line by means of the X POS control.
- Enter SERVICE MENU "1".
- Select measuring number "1.8".
- Adjust R4406 and R4408 so that the start of the intensified part of the trace coincides with the 2nd and 10th vertical graticule lines respectively.
- Repeat the adjustments of R4406 and R4408 a couple of times since they are interdependent.
- Depress AUTO SET twice to leave the service menu again.

13.4.13 Square-wave response of final Y-amplifier

Adjustment of square-wave response:

- Apply a 120 mV/1 MHz calibrated square-wave signal with rise time faster than 1 nsec to input A.
- Press AUTO SET key.
- Set UP-DOWN ch.A to 20 mV.
- Set UP-DOWN MTB to 0,5 microsec.
- Adjust the square-wave response with R3017.
- Set UP/DOWN MTB to 0,1 microsec.
- Adjust the square-wave response with R3013 and C3007.
- Press TB MAGN key for x10 magnification.
- Adjust the square-wave response with C3004, C3005, C3016 and R3036.
- Remove the input signal again.

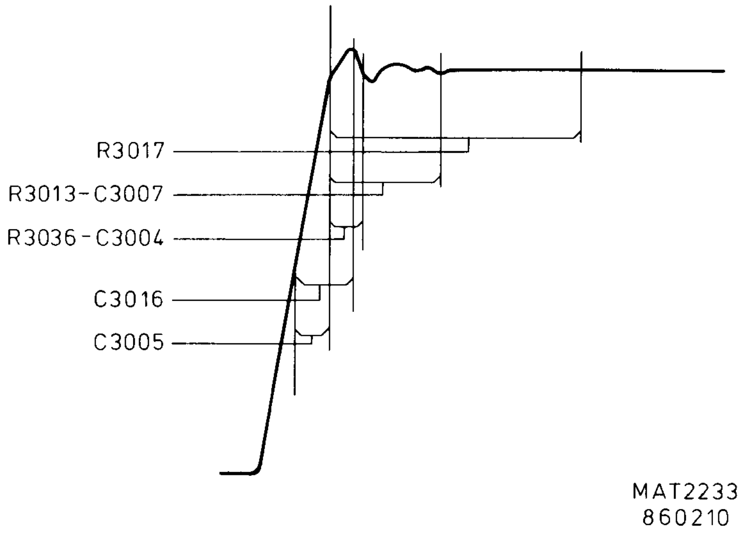

Figure 13.2 Square-wave response

Checking the chopper interference:

- Press A/B key so that both channels A and B are displayed.
- Press ALT/CHOP key for a chopped display.
- Set UP-DOWN ch.A and ch.B to 1 V.
- Press TB MAGN again for x1 magnification.
- Set UP-DOWN MTB to 0,5 msec.
- Press both 0 keys for channel A and B.
- Adjust Y POS A and Y POS B controls for a 6 division distance between both lines.
- Ensure that the chopper interference between both channels is as small as possible; if necessary, readjust R3017.

NOTE: When readjustment of R3017 is necessary, it is recommended to ensure that the h.f. square-wave response is still correct. If necessary, readjust the relevant adjusting components.

Bandwidth check:

The indications for channel B are shown in brackets after those of channel A.

- Apply a 120 mV/50 kHz calibrated sine wave signal to input A(B). This 6 division signal amplitude functions as a reference.
- Press AUTO SET key.
- Set UP-DOWN ch.A (ch.B) to 20 mV.
- Set UP-DOWN MTB to 0,1 msec.
- Ensure that the amplitude display on the screen does not become smaller than 4,2 divisions over the total frequency range up to 50 MHz.

13.4.14 Checking the AUTO SET function

- Set UP-DOWN ch.A to 10 V.
- Set UP-DOWN MTB to 0,5 sec.
- Apply a 120 mV/1 kHz sine-wave to input A.
- Press AUTO SET key.
- Ensure that a triggered sine-wave signal is visible on the screen with 2...5 division amplitude and 2...5 periods.

14. CORRECTIVE MAINTENANCE

14.1 REPLACEMENTS

WARNING: The EHT cable is directly connected to the CRT. When the EHT cable to the post-acceleration anode is disconnected, the cable must be discharged by shorting the terminal to the instrument's earth.

14.1.1 Standard parts

Electrical and mechanical replacement parts can be obtained through your local Philips organisation or representative. However, many of the standard electronic components can be obtained from other local suppliers. Before purchasing or ordering replacement parts, check the parts list for value, tolerance, rating and description.

NOTE: Physical size and shape of a componenent may affect the instrument's performance, particularly at high frequencies. Always use direct-replacement components, unless it is known that a substitute will not degrade the instrument's performance.

14.1.2 Special parts

In addition to the standard electronic components, some special components are used:

- Components, manufactured or selected by Philips to meet specific performance requirements.
- Components which are important for the safety of the instrument.

ATTENTION: Both type of components may only be replaced by components obtained through your local Philips organisation of representative.

14.1.3 Transistors and Integrated Circuits

- Return transistors and IC's to their original positions, if removed during routine maintenance.
- Do not renew or switch semi-conductor devices unnecessarily, as it may affect the calibration of the instrument.
- Any replacement component should be of the original type or a direct replacement. Bend the leads to fit the socket or pcb-holes and cut the leads to the same length as on the component being renewed.
- When a device has been renewed, check the operation of the part of the instrument that may be affected.
- When re-installing power-supply transistors, use silicon grease to increase the heat-transfer capabilities.

WARNING: Handle silicon grease with care. Avoid contact with the eyes. Wash hands thoroughly after use.

14.1.4 Static-sensitive components

This instrument contains electrical components that are susceptible to damage from static discharge. Servicing static-sensitive assemblies or components should be performed only at a static-free work station by qualified service personnel.

14.1.5 Handling MOS devices

Though all our MOS integrated circuits incorporate protection against electrostatic discharges, they can nevertheless be damaged by accidental over-voltages. In storing and handling them, the following precautions are recommended.

CAUTION: Testing or handling and mounting calls for special attention regarding personal safety. Personnel handling MOS devices should normally be connected to ground via a resistor.

14.1.5.1 Storage and transport

Store and transport the circuits in their original packing. Alternatively, use may be made of a conductive material or a special IC carrier that either short-circuits all leads or insulates them from external contact.

14.1.5.2 Testing or handling

Work on a conductive surface (e.g. metal table top) when testing the circuits or transfering them from one carrier to another. Electrically connect the person doing the testing or handling to the conductive surface, for example by a metal bracelet and a conductive cord to a chain. Connect all testing and handling equipment to the same surface. Signals should not be applied to the same surface. Signals should not be applied to the inputs while the device power supply is off. All unused input leads should be connected either to the supply voltage or to ground.

14.1.5.3 Mounting

Mount MOS integrated circuits on printed circuit boards after all other components have been mounted. Take care that the circuits themselves, metal parts of the board, mounting tools, and the person doing the mounting are kept at the same electrical (ground) potential.
If it is impossible to ground the printed-circuit board, the person mounting the circuits should touch the board before bringing the MOS circuits into contact with it.

14.1.5.4 Soldering

Soldering iron tips, including those of low voltage irons, or soldering baths should also be kept at the same potential as the MOS circuits and the board.

14.1.5.5 Static charges

Dress personnel in clothing of non-electrostatic material (no wool, silk or synthetic fibres). After the MOS circuits have been mounted, the proper handling precautions should still observed. Until the subassemblies are inserted into the complete system in which the proper voltages are supplied, the board is not more than an extension of the leads of the devices mounted on the board. To prevent static charges from being transmitted through the board wiring to the device it is recommended that conductive clips or conductive tape is put on the circuit board terminals

14.1.5.6 Transient voltages

To prevent permanent damage due to transfer voltages, do not insert or remove MOS devices, or printed-circuit boards with MOS devices, from test sockets or systems with power on.

14.1.5.7 Voltage surges

Beware of voltage surges due to switching electrical equipment ON or OFF, relays and d.c. lines.

14.2 REMOVING THE UNITS AND MECHANICAL PARTS

NOTE: For installation, reverse the sequence.

14.2.1 Attenuator unit (A1)

- Push gently both clamping lips that secure the metal locking plate for the attenuator unit and remove the locking plate.
- Push the attenuator unit backwards for about 1 cm.
- Remove the front unit (see section 14.2.7).
- Remove the control knobs of the CRT control unit.
- Pull gently both clamping lips that secure the front profile gently backwards and loosen the front profile.

ATTENTION: To avoid damage, ensure that the BNCs of the attenuator unit are behind the front profile before loosening the front profile.

Now the attenuator unit can easily pulled out of the instrument after removing the connector with flat cable and the ground connector.

Dismantling the Attenuator unit:

- For access to the components of the unit, remove both upper and bottom covers.
- When removing the BNCs first unsolder the wire to the p.c.b. and then unscrew the BNC-nut with a spanner of max. 5 mm thickness.

14.2.2 Pre-amplifier unit (A2)

- First remove the time-base unit (see section 14.2.4).
- Unlock the two p.c.b. supports
- The complete p.c.b. can be removed from the instrument after having removed all flat cables.

14.2.3 XYZ-amplifier unit (A3)

The XYZ amplifier unit incorporates two separate p.c.b.'s connected via a flat cable. One p.c.b. includes among other things the CRT socket and must be loosened first. For this, the CRT socket must be gently removed from the CRT.

Now the part situated above the CRT can be removed as follows:

- Remove all flat cables and the delay line cable plug.
- Pull all six clamping lips that secure the XYZ-amplifier unit p.c.b. outwards and take out the complete unit.

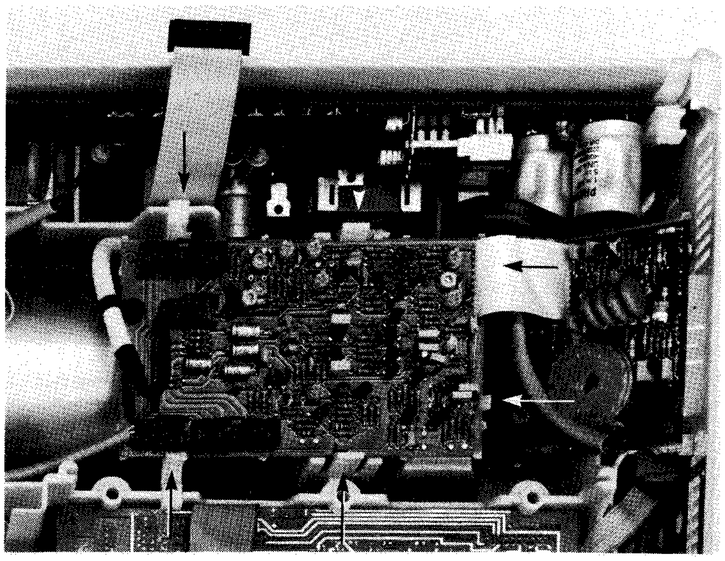
MAT2234

Figure 14.1 Six clamping lips for XYZ-amplifier unit

14.2.4 Time-base unit (A4)

- Unlock the p.c.b. support with a special tool that fits the diameter of the p.c.b. support (see section 14.6.2).
- The complete p.c.b. can be taken out of the instrument after having removed all flat cables.

14.2.5 CRT control unit (A5)

- Remove the front unit (see section 14.2.7)
- Loosen the front profile (see section 14.2.1)
- Now the CRT control unit can be pulled out of the front profile after having removed the flat-cable and the CAL connector.

14.2.6 Power supply unit (A6)

WARNING: Inside the power supply p.c.b. there are many parts that carry dangerous high voltages. Some of these voltages remain some time after disconnecting the instrument from the mains. Therefore, it is recommended to wait at least five minutes after having disconnected the instrument from the mains, before removing the p.c.b. If working on the power supply unit under live condition cannot be avoided, it must be done by a qualified technician who is aware of the dangers involved.

- Remove the extension shaft from the ON/OFF switch by pushing both sides of the end of the shaft together.
- Push both clamping lips that secure the power supply unit.
- Lift the power supply unit outside the instrument.
- Place the p.b.c. in the unit slider.

NOTE: After the above actions, the power supply unit can be measured under working conditions, provided that all cables are still connected to the unit.

NOTE: The flat cable to the CRT control unit can easilly be removed now when removing this unit.

- Remove the two flat cables, the power supply cable, the two- and three-pole cable connectors and the EHT-connector from the CRT.

WARNING: The EHT cable is directly connected to the CRT. When the EHT cable to the post-acceleration anode is disconnected, the cable must be discharged by shorting the terminal to the instrument's earth.

- The power supply can now be taken out of the instrument.

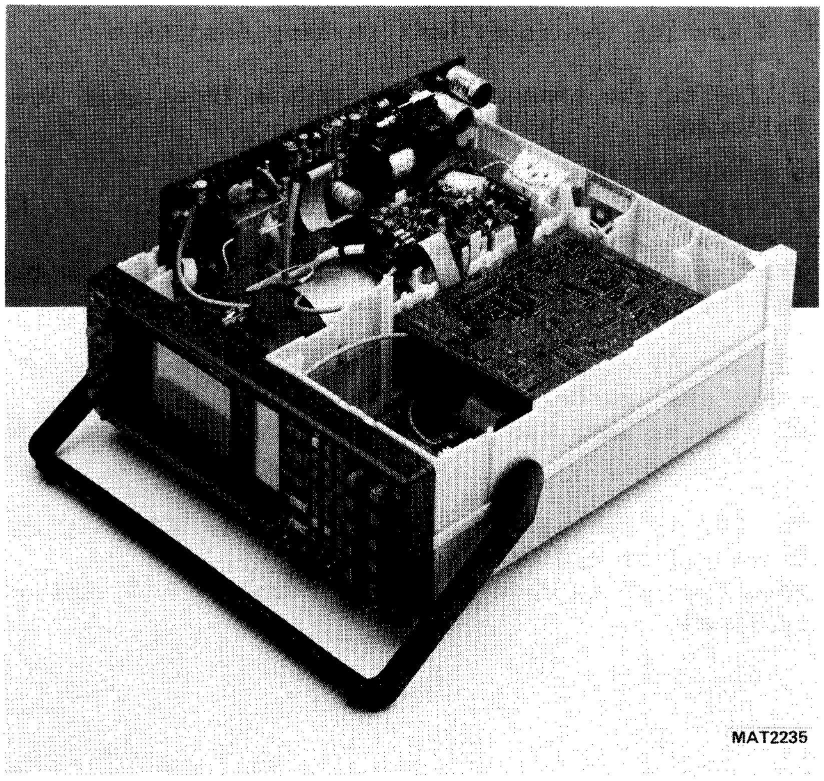

Figure 14.2 Power supply unit outside the instrument

14.2.7 Front unit (A7) and LCD unit (A8)

- Unscrew the two screws, located at the rear of the front unit.
- Now the complete unit assembly can be slid out of the front profile of the instrument.

NOTE: After the above actions, the front unit can be measured under working conditions, provided that the flat cable is still connected to the unit.

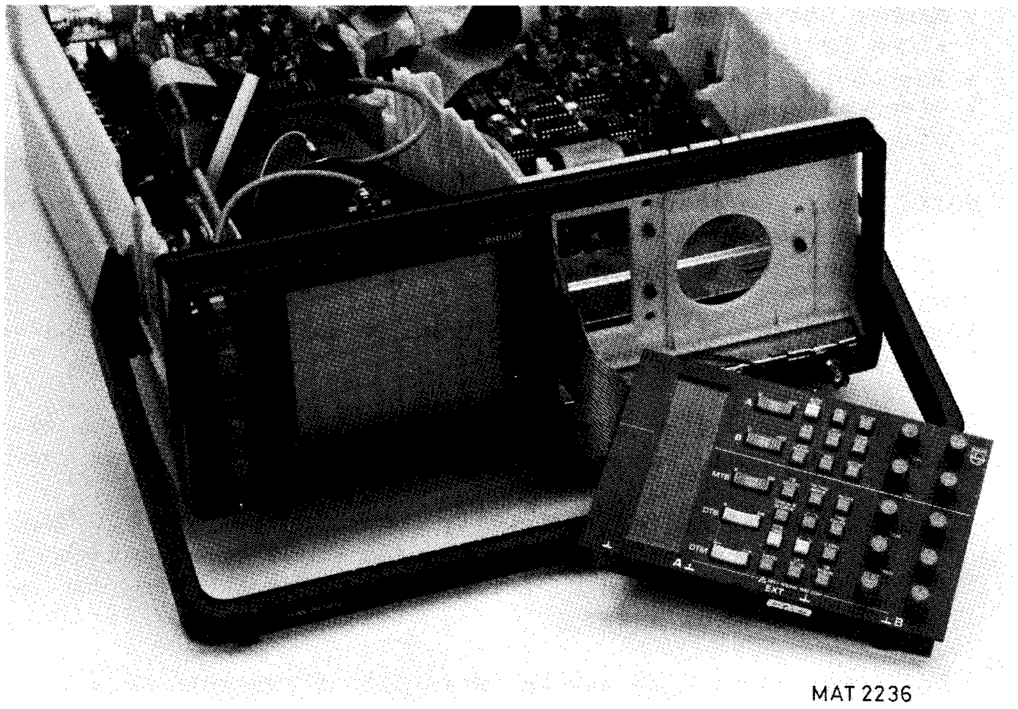

Figure 14.3 Measuring the front unit working condition

For accessibility to the component side of the front unit and LCD unit, proceed as follows:

- Unplug the connector with flat cable
- Remove all control knobs; the knobs can easily pulled off the potentiometer spindles
- Pull all clamping lips that secure the front unit p.c.b. gently outwards and loosen the text plate.

NOTE: The LCD unit is connected to the front unit by means of two 3-pin connectors and can be easily pulled off.
The LCD display lamp can be reached after pulling off the LCD unit.

ATTENTION: The LCD is unbreakely connected to the LCD unit and cannot Exchanged as a separate component.
When the LCD is defective, the complete LCD unit must be replaced.

14.2.8 Removing the delay line cable

The delay line cable is a 54 cm cable that is connected to the amplifier unit and to the XYZ amplifier unit.
To remove the delay line cable, proceed as follows:

- For access to the delay line cable, remove the time-base unit (See section 14.2.4) and the pre-amplifier unit (see section 14.2.2).
- Unlock the plastic clamps that fix the cable to the instrument's chassis and to the units.
- Remove the plug that connect the delay line cable to the pre-amplifier unit.
- Unscrew the plastic clamp that fix the cable to the XYZ-amplifier unit.
- Remove the plug that connects the delay line cable to the XYZ-amplifier unit.

14.2.9 Replacement of CRT

IMPORTANT: It is strongly recommended to study of this chapter and the associated illustration (figure 14.4) before starting replacement.

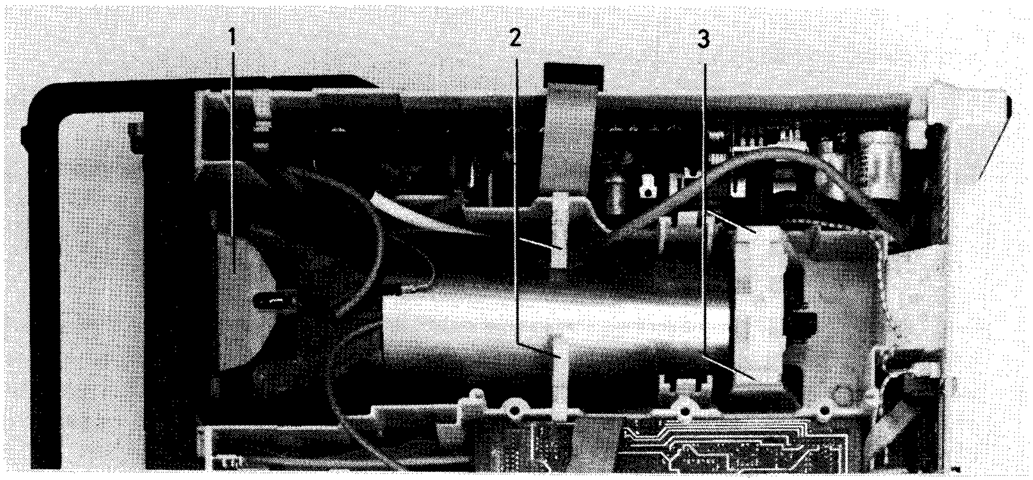

Figure 14.4 Removing the CRT

- Remove the XYZ-amplifier unit, see section 14.2.3.
- Remove the graticule lamp holder (1).
- Remove the bezel with the screen filter.
- Remove the two plastic p.c.b. supports (2).
- Unlock the EHT-cable.

WARNING: Handle the CRT carefully. Rough handling or scratching can cause the CRT to implode.

- Push the two clamping lips that secure the CRT support (3) and gently lift the CRT, incl. metal shielding out of the instrument.

NOTE: Before re-assembling a new CRT, first remove its protective cover and place the CRT front rubber around the CRT-front.

14.3 SOLDERING TECHNIQUES

Working method:

- Carefully unsolder one after the other the soldering leads of the semi-conductor.
- Remove all superfluous soldering material. Use a suction iron of suction litze wire.
- Check that the leads of the replacement part are clean and pre-tinned on the soldering place.
- Locate the replacement semi-conductor exactly on its place, and solder each lead to the relevant printed conductor on the circuit board.

NOTE: Bear in mind that the maximum permissible soldering time is 10 seconds during which the temperature of the leads must not exceed 250°C. The use of solder with a low melting point is therefore recommended.
Take care not to damage the plastic encapsulation of the semi-conductor (softening point of the plastic is 150°C).

ATTENTION: When you are soldering inside the instrument, it is essential to use a low-voltage soldering iron, the tip of which must be earthed to the mass of the oscilloscope.

Suitable soldering irons are:

- ORYX micro-miniature soldering instrument, type 6 A, voltage 6 V, in combination with PLATO pin-point tip type 0-569.
- ERSA miniature soldering iron, type minor 040 B, voltage 6 V.
- Low Voltage Mini Soldering Iron, type 800/12 W-6 V, power 12 W, voltage 6 V, order no. 4822 395 10004, in combination with 1mm pin-point tip, order no. 4822 395 10012.

Ordinary 60/40 solder with core and 35 to 40 W pencil type soldering iron can be used for the majority of the soldering. If a higher wattage-rating soldering iron is used on the etched circuit boards, excessive heat can cause the etched circuit wiring to separate from the board base material.

14.4 INSTRUMENT REPACKING

If the instrument is to be shipped to a Service Centre for service or repair, attach a tag showing the full address and the name of the individual at the users firm that can be contacted. The Service Centre needs the complete instrument, its serial number and a fault description. If the original packing is not available, repack the instrument in such a way that no damage occurs during transport.

14.5 TROUBLE SHOOTING

14.5.1 Introduction

The following information is provided to facilitate trouble shooting. Information contained in other sections of the manual should also be used to locate the defect. An understanding of the circuit is helpful in locating troubles, particularly where integrated circuits are used. Refer to the circuit description for this information.

14.5.2 Trouble-shooting techniques

If a fault appears, the following test sequence can be used to find the defective part:

- Check if the settings of the controls of the oscilloscope are correct. Consult the Operating Instructions.
- Check the equipment to which the oscilloscope is connected and the interconnection cables.
- Check if the oscilloscope is well-calibrated. If not, refer to section 13. "Checking and Adjusting".
- Visually check the part of the oscilloscope in which the fault is suspected. In this way, it is possible to find faults such as bad soldering connections, bad interconnection plugs and wires, damaged components or transistors and IC′s that are not correctly plugged into their sockets.
- Location of the circuit part in which the fault is suspected: the symptom often indicates this part of the circuit. If the power supply is defective the symptom will appear in several circuit parts.

After having carried out the previous steps, individual components in the suspected circuit parts must be examined:

- Transistors and diodes.

Check the voltage between base and emitter (0,7 V approx. in conductive state) and the voltage between collector and emitter (0,2 V approx. in saturation) with a voltmeter or an oscilloscope. When removed from the p.c.b. it is possible to test the transistor with an ohmmeter since the base/collector junctions can be regarded as diodes. Like a normal diode, the resistance is very high in one direction and low in the other direction. When measuring take care that the current from the ohmmeter does not damage the component under test.
Replace the suspected component by a new one if you are sure that the circuit is not in such condition that the new component will be damaged.

- Integrated circuits.

In circuit, testing can be done with an oscilloscope or voltmeter. A good knowledge of the circuit part under test is essential. Therefore, first read the circuit descriptions in sections 3...10.

- Capacitors.

Leakage can be traced with an ohmmeter adjusted to its highest resistance range. When testing take care of polarity and maximum allowed voltage. An open capacitor can be checked if the response for AC signals is observed. Also a capacitance meter can used: compare the measured value with the value and tolerance indicated in the parts list

- Resistors.

Can be checked with an ohmmeter after having unsoldered one side of the resistor from the pcb. Compare the measured value with the value and tolerance indicated in the parts list.

- Coils and transformers.

An ohmmeter can be used for tracing an open circuit. Shorted or partially shorted windings can be found by checking the waveform responses when HF signals are passed through the circuit. Also an inductance meter can be used.

- Data latches.

To measure on inputs and outputs of data latches a measuring oscilloscope can be triggered by the clock signal which is connected to the clock input of the data latch.
This measurement can only be made in this way when there is an acceptable repetition time of the clock signal. A too low clock pulse repetition time results in a low intensity of the trace on the measuring oscilloscope screen.
The outputs can easily be checked by a voltmeter or oscilloscope.

14.5.3 Power-up routine

Every time the instrument is switched-on the following initialisation program is executed:

- Resetting the IIC-bus.
- Resetting D2603 (OQ 0200)
- Determinig the SLAVE-address of D2603.
- Checking if Service routine is required (if yes the program will continue with the service routine).
- Checking the "WATCH-DOG" on A7 (if HIGH, all relevant LCD-segments will be lighting for about 1 sec).
- Eventually initialisation of the IEEE-option.

If during the program-run a circuit is found to be faulty, the program stops. It is recommended to switch-off and after a few seconds switch-on again. This will reset the micro-computer controlled system automatically. If the instrument goes in the same faulty situation again, the following procedure indicates how to handle. If no faulure is found, all relevant LCD-segments will be lighting for about one second. After this the normal program is executed.

PROCEDURE:

Check the SDA and SCL lines after haved switched-on. On the SCL a clock-pulse must be present, while the SDA gives the data-information (looks like a random pulse). If one of these signals is not present, you can localize on what unit the fault exists. This can be done by first unplug connector X1009 or X2001 on resp. A1 and A2. To localize what serial-parallel conversion IC is defective, you can disconnect the solder joint in the SDA and SCL print track lead to that IC.
The following IC's can disconnected in this way: D1001, D1101, D2602, D2603, D4001, D4002, D4401.

When the instrument restarts every time again, this means the WATCHDOG is initiating the main program (see also section 10.1.4), the watchdog can be disabled. This can be done by means of the solder joint jumper on the rear of the front unit p.c.b. (near X7001).
When disabled, pin 13 of the microcomputer is set to a low level.

14.5.4 Trouble-shooting the power supply

To determine whether a certain fault condition is initiated by the power supply itself or by the connected oscilloscope circuits, a dummy load is listed in the table below. The table gives also an example of the resistor types that can be used to compose the dummy load.
These resistors can be ordered at Concern Service.

Supply voltage	Output current	Dummy resistance and their service ordering numbers
+ 5 V	2,4 A	2,1E-12W: 3 x 8E (4822 112 21052) and 10E (4822 112 21054) in parallel.
- 6,4 V	930 mA	6,9E-6W: 8,2E (4822 112 41052) and 47E (4822 110 23072) in parallel.
+ 12 V	720 mA	17,2E-8,7W: 33E (4822 112 41067) and 39E (4822 112 43069) in parallel.
- 12 V	500 mA	24,7E-6W: 39E (4822 112 41069) and 68E (4822 112 41067) in parallel.
+ 17 V	340 mA	51E-6W: 1E (4822 110 23027) in serial with 2 x 100 E(4822 112 41081) in parallel.
- 17 V	100 mA	171E-1,7W: 270E (4822 110 43092) and 470E (4822 110 43098) in parallel.
+ 48 V	140 mA	341E-7W: 330E (4822 112 41094) in serial with 12E(4822 110 23056).
- 48 V	40 mA	1k22-2W: 2k2 (4822 110 23116) and 2k7 (4822 110 23118) in parallel.

14.5.5 P.c.b. interconnections

Figure 14.5 gives a survey of all interconnections between the p.b.c.'s and to the CRT. Also the interconnections between the connectors on board level is given in this diagram.
An explanation of the connector indication is given below:

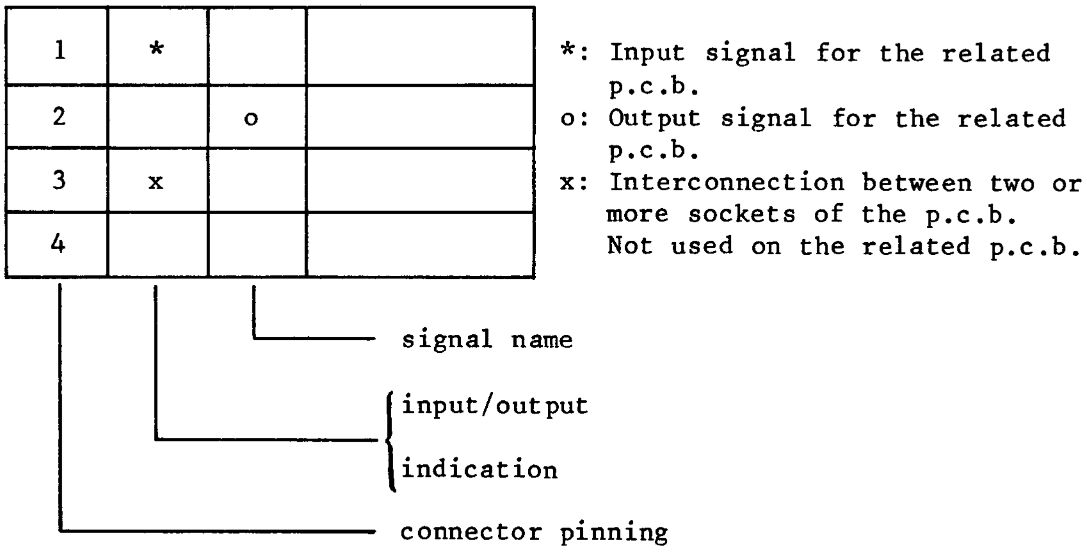

*: Input signal for the related p.c.b.
o: Output signal for the related p.c.b.
x: Interconnection between two or more sockets of the p.c.b.
Not used on the related p.c.b.

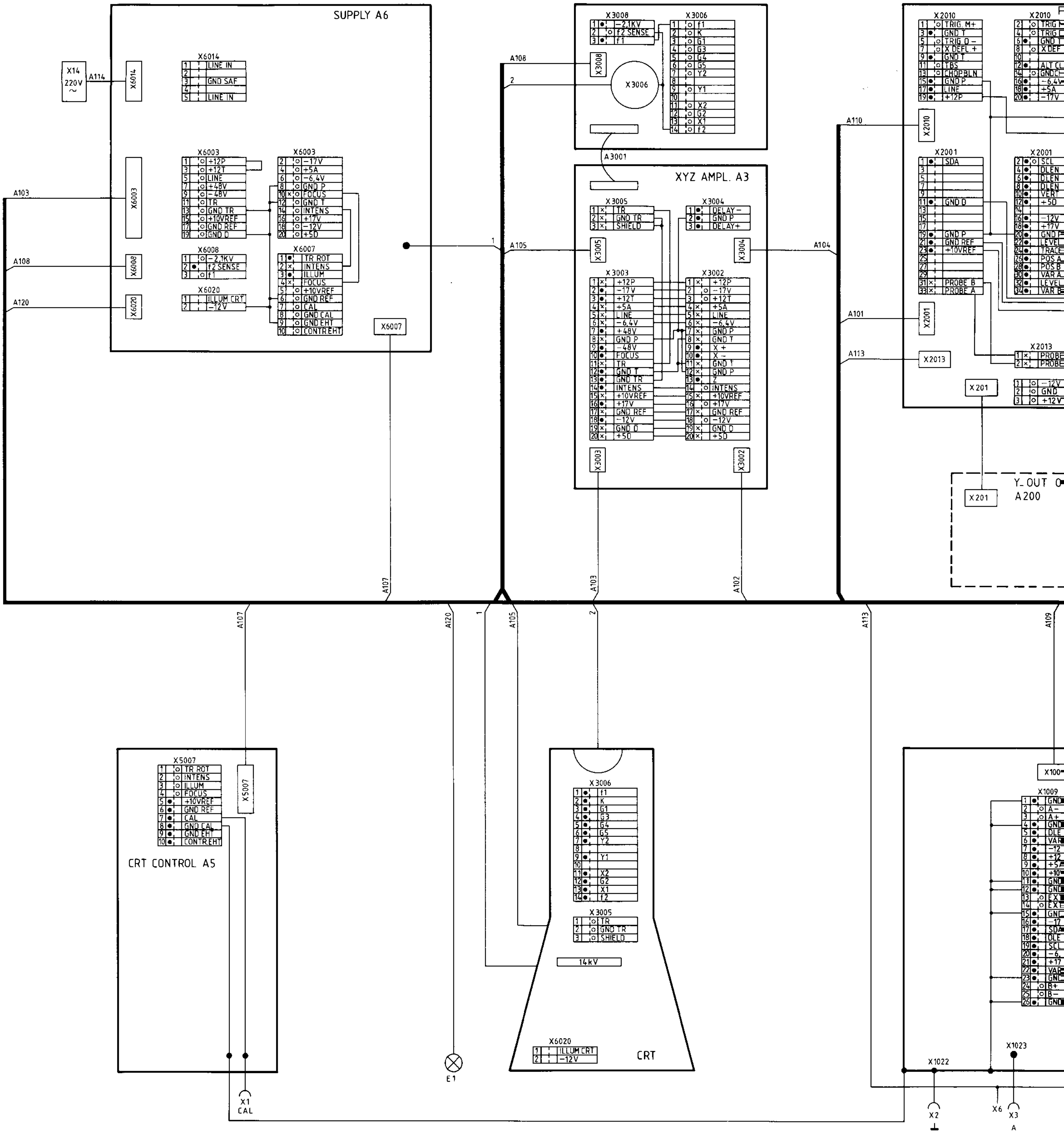
SUPPLY A6
X14 220V ~
A114
X6014
LINE IN
GND SAF
LINE IN
X6003
+12P
+12T
LINE
+48V
-48V
TR
GND TR
+10VREF
GND REF
GND D
-17V
+5A
-6,4V
GND P
FOCUS
GND T
INTENS
+17V
-12V
+5D
X6008
-2,1KV
f2 SENSE
f1
X6020
ILLUM CRT
-12V
X6007
TR ROT
INTENS
ILLUM
FOCUS
+10VREF
GND REF
CAL
GND CAL
GND EHT
CONTR EHT
A103
A108
A120
A107
X3008
X3006
A3001
XYZ AMPL. A3
X3005
TR
GND TR
SHIELD
X3004
DELAY-
GND P
DELAY+
X3003
X3002
A105
A104
A102
A103
A110
X2010
TRIG. M+
GND T
TRIG. 0-
X DEFL +
TBS
CHOPBLN
LINE
+12P
X2001
SDA
GND D
GND P
GND REF
+10VREF
PROBE B
PROBE A
SCL
DLEN
VERT
LEVEL
TRACE
POS A
POS B
VAR A
VAR B
A101
A113
X2013
X201
Y-OUT
A200
A109
A107
A120
A105
A113
X5007
CRT CONTROL A5
E1
14kV
X6020
ILLUM CRT
CRT
X1009
X1022
X1023
X1
CAL
X2
X6
X3
A

Figure 14.5 P.c.b. interconnections

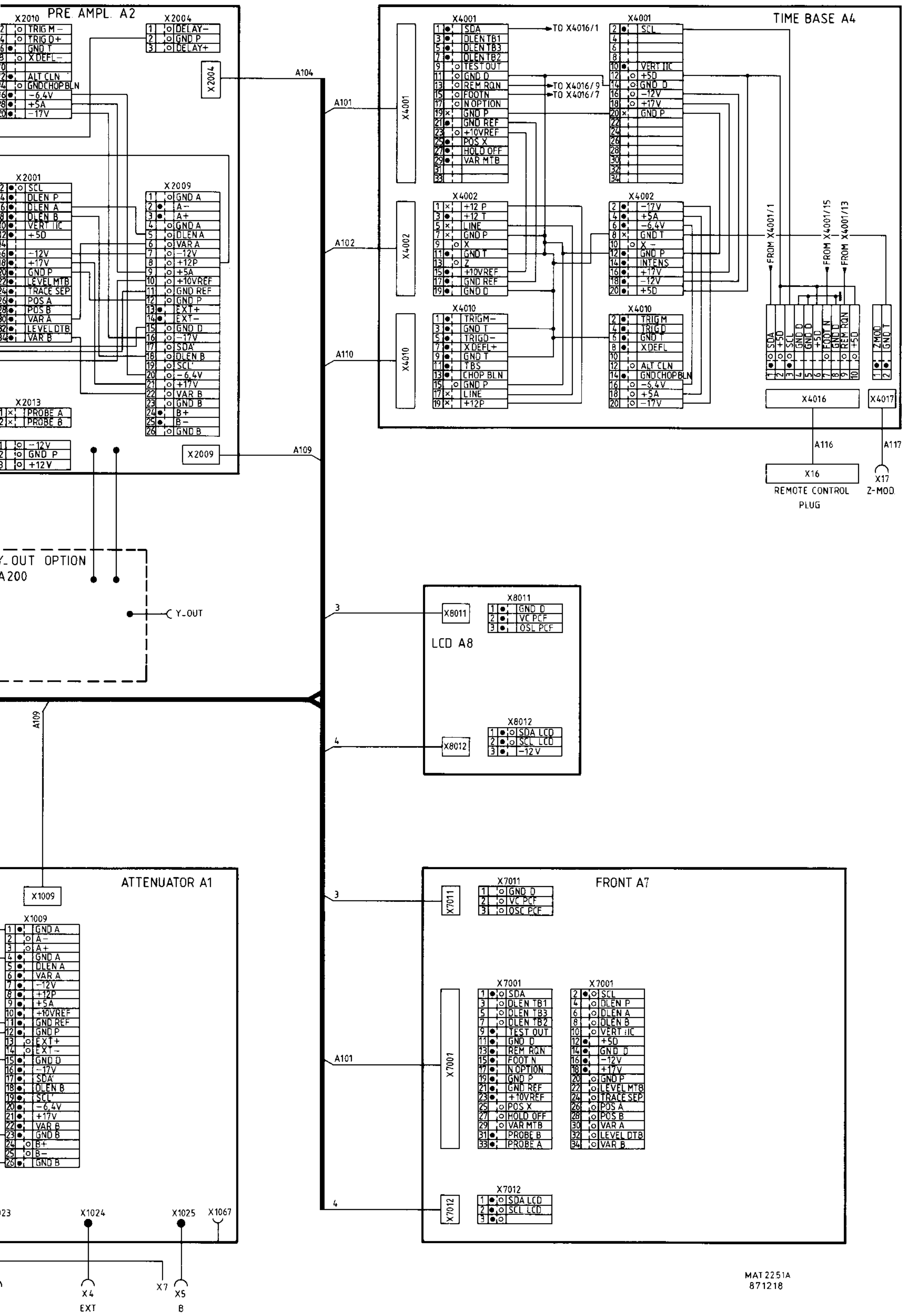
PRE AMPL. A2
X2010
X2004
X2001
X2009
X2013
TIME BASE A4
X4001
X4002
X4010
X4016
X4017
TO X4016/1
TO X4016/9
TO X4016/7
FROM X4001/1
FROM X4001/15
FROM X4001/13
A104
A101
A102
A110
A109
A116
A117
X16
REMOTE CONTROL PLUG
X17
Z-MOD
Y-OUT OPTION
A200
Y-OUT
LCD A8
X8011
X8012
ATTENUATOR A1
X1009
X1024
X1025
X1067
X4
EXT
X7
X5
B
FRONT A7
X7011
X7001
X7012

MAT 2251A
871218

14.5.6 Signal waveforms

The signal waveforms in the circuit diagrams can be measured on the measure points (X...). Condition:

- Apply the CAL voltage via a 1:10 probe to input CH A.
- Press AUTO SET

If addition operation is needed, it is stated.

14.5.7 Semi conductor pinnings

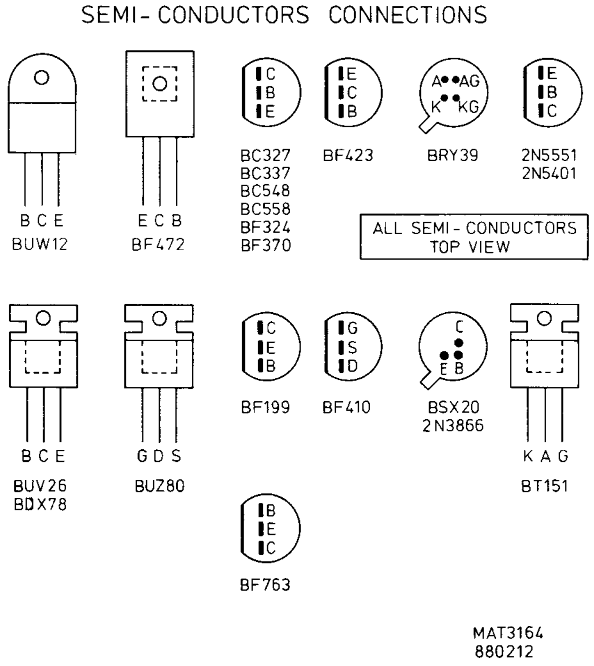
SEMI-CONDUCTORS CONNECTIONS
B C E
BUW12
E C B
BF472
C B E
BC327
BC337
BC548
BC558
BF324
BF370
E C B
BF423
A AG K KG
BRY39
E B C
2N5551
2N5401
ALL SEMI-CONDUCTORS TOP VIEW
B C E
BUV26
BDX78
G D S
BUZ80
C E B
BF199
G S D
BF410
C E B
BSX20
2N3866
K A G
BT151
B E C
BF763
MAT3164
880212

Figure 14.6

14.6 SPECIAL TOOLS

14.6.1 Trimming Kit SBC 317 - 4822 310 50095

The SBC 317 Trimming Kit matches every current trimming requirement for all products. The set contains 27 items (22 different bits, plus 3 bit holders and 2 extension pieces). The insulated holders and extension pieces make it easy to reach into a chassis and make accurate adjustments, without wasting time or risking shocks.
The SBC 317 Trimming Kit is packed in a flat transparent case. Several of the most commonly required bits are duplicated. In addition, a spare set of 8 bits is separately available as replacement (4822 310 50016).

The Trimming Kit contains the following parts:

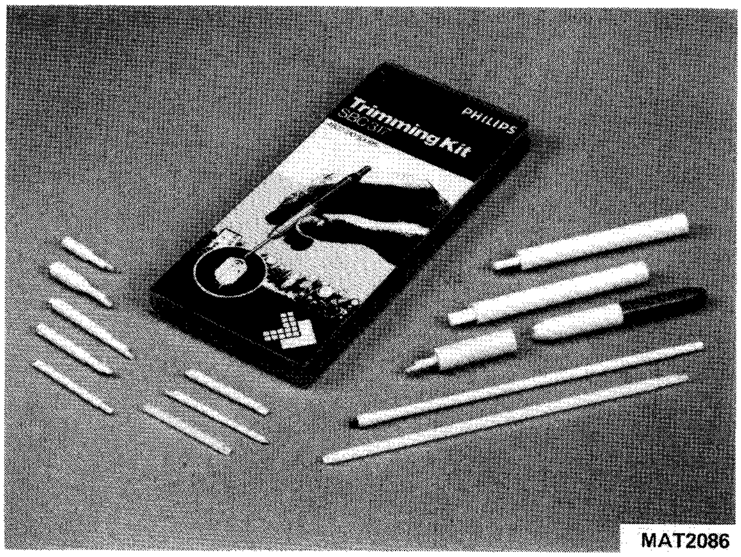

Figure 14.7 Trimming tool kit

14.6.2 P.c.b. snapper - 5322 535 91942

A special tool is available for removal of the pcb from the p.c.b. supports. Information on how to use this tool is given in chapter 14.2. The ordering number of this tool is 5322 535 91942

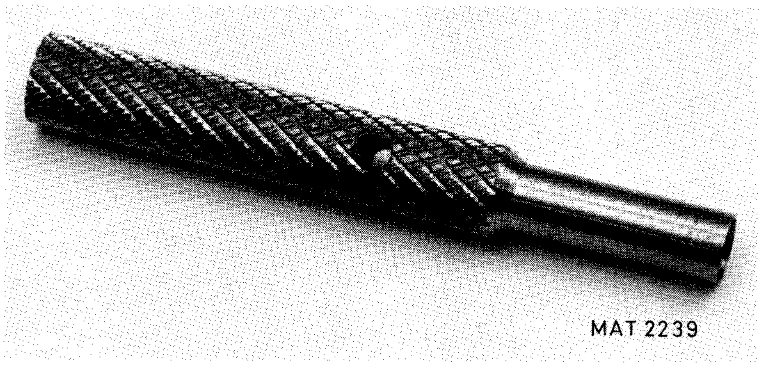

Figure 14.8 P.c.b. snapper

14.7 RECALIBRATION AFTER REPAIR

After any electrical component has been renewed the calibration of its associated circuit should be checked, as well as the calibration of other closely-related circuits.
Since the power supply affects all circuits, calibration of the entire instrument should be checked it work has been done in the power supply or if the transformer has been renewed.

15. SAFETY INSPECTION AND TEST AFTER REPAIR AND MAINTENANCE IN THE PRIMARY CIRCUIT

15.1 GENERAL DIRECTIVES

- Take care that the creepage distances and clearances have not been reduced.
- Before soldering, the wires should be bent through the holes of solder tags, or wrapped around the tag in the form of an open U, or, wiring ridigity shall be maintained by cable clamps or cable lacing.
- Replace all insulating guards and -plates.

15.2 SAFETY COMPONENTS

Components in the primary circuit may only be renewed by components selected by Philips, see also section 14.1.2.

15.3 CHECKING THE PROTECTIVE EARTH CONNECTION

The correct connection and condition is checked by visual control and by measuring the resistance between the protective lead connection at the plug and the cabinet/frame. The resistance shall not be more than 0,1 Ohm. During measurement the mains cable should be removed from the mains. Resistance variations indicate a defect.

15.4 CHECKING THE INSULATION RESISTANCE

Measure the insulation resistance at U = 500 V dc between the mains connections and the protective lead connections. For this purpose, set the mains switch to ON. The insulation resistance shall not be less than 2 Meg-ohm.

NOTE: 2 Meg-ohm is a minimum requirement at $40^{\circ}C$ and 95 % Relative Humidity. Under normal conditions the insulation resistance should be much higher (10 ... 20 Meg-ohm).

15.5 CHECKING THE LEAKAGE CURRENT

The leakage current shall be measured between each pole of the mains supply in turn, and all accessible conductive parts connected together (including the measuring earth terminal).
The leakage current is not excessive if the measured currents from the mentioned parts does not exceed 0,5 mA rms.

15.6 VOLTAGE TEST

The instrument shall withstand, without electrical breakdown, the application of a test voltage between the supply circuit and accessible conductive parts that are likely to become energized. The test potential shall be 1500 V rms at supply-circuit frequency, applied for one second.
The test shall be conducted when the instrument is fully assembled, and with the primary switch in the ON position.
During the test, both sides of the primary circuit of the instrument are connected together and to one terminal of the voltage test equipment; the other voltage test equipment terminal is connected to the accessible conductive parts.

16. PARTS LIST

(subject to alteration without notice)

16.1 MECHANICAL PARTS

16.1.1 Mechanical parts indicated in figure 16.1.

Item	Qty	Ordering code	Description
1	1	5322 381 10779	Bezel
2	1	5322 480 30181	Contrast filter blue
3	1	5322 455 81075	Textfilm on bezel PM3055
3	1	5322 455 81076	Textfilm on bezel PM3057
4	1	5322 268 14052	CAL socket
5	1	4822 530 70296	Clamping spring for CAL socket
6	13	5322 414 10018	Control knob with spring
7	1	5322 464 90252	Front frame
8	1	5322 455 81026	Textfilm CRT unit
9	1	5322 455 81025	Textfilm for handle
10	1	5322 498 50219	Handle assembly
11	1	5322 414 60142	Power-on knob, green-brown
12	2	5322 492 63355	Spring for handle
13	1	5322 535 80735	Extension part for power-on switch
14	1	5322 464 90248	Upper cabinet
15	2	5322 462 10265	P.c.b. support for A3
16	2	5322 462 10264	P.c.b. guiding for A6
17	1	5322 464 90486	Chassis
18	6	5322 462 30304	P.c.b. support
19	1	5322 464 90249	Bottom cabinet
20	2	5322 464 90253	Attenuator cover
21	4	5322 462 50325	Bottom foot
22	3	5322 506 41006	BNC nut
23	3	5322 532 21188	BNC spacer ring
24	3	5322 267 10004	BNC socket
25	1	5322 464 90254	Front unit frame
26	1	5322 455 81028	Textfilm for front unit
27	18	5322 276 11856	Softkey brown
28	2	5322 276 11858	Softkey beige
29	1	5322 276 11857	Softkey green
30	2	5322 277 10879	UP-DOWN key beige
31	3	5322 277 10878	UP-DOWN key brown
32	2	5322 492 63354	Range indication spring
33	1	5322 450 60952	LCD window
--	3	5322 401 10954	Delay line cable clamp
--	2	5322 255 40054	Heatsink for V3011 and V3012

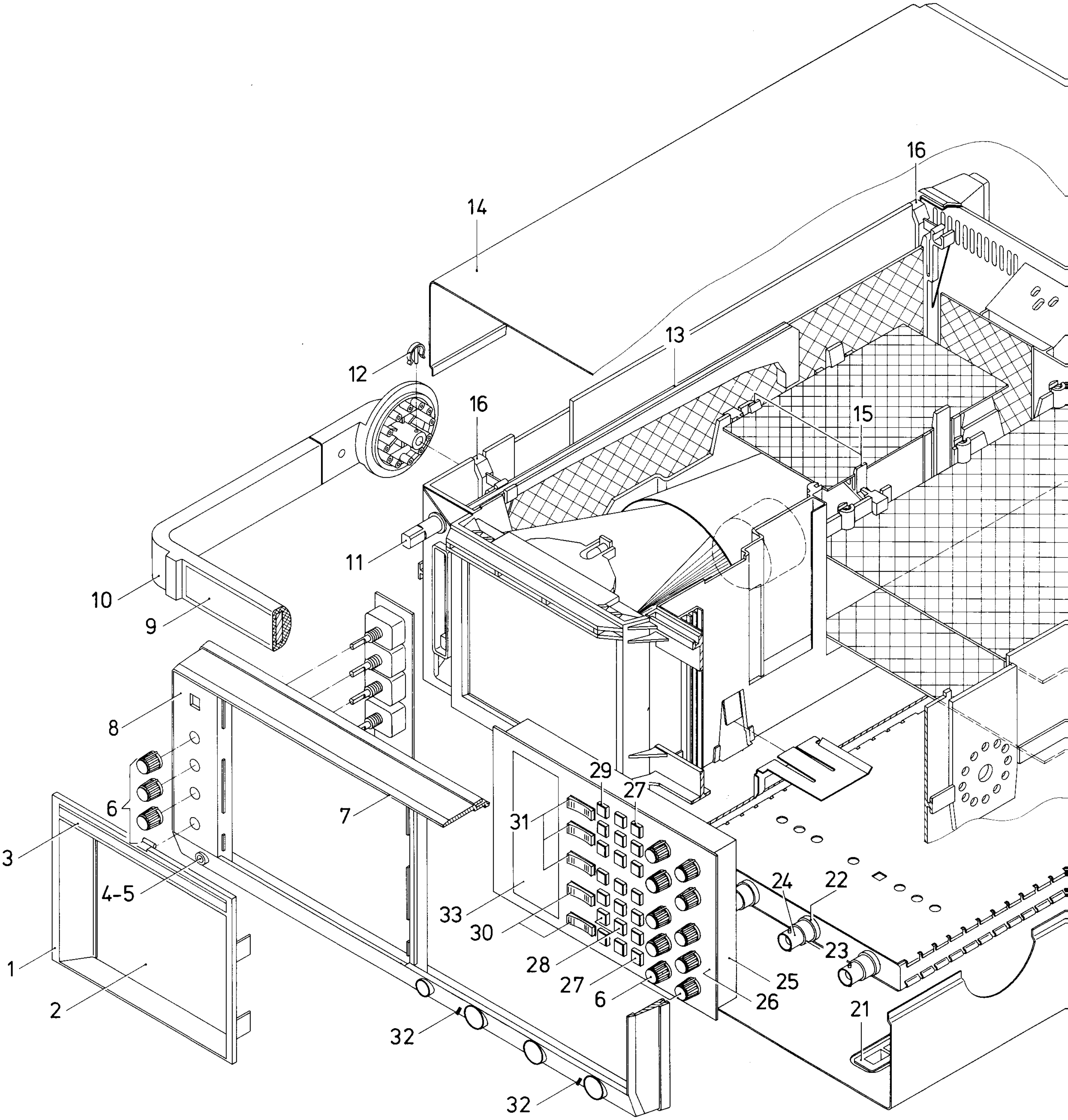
4-5

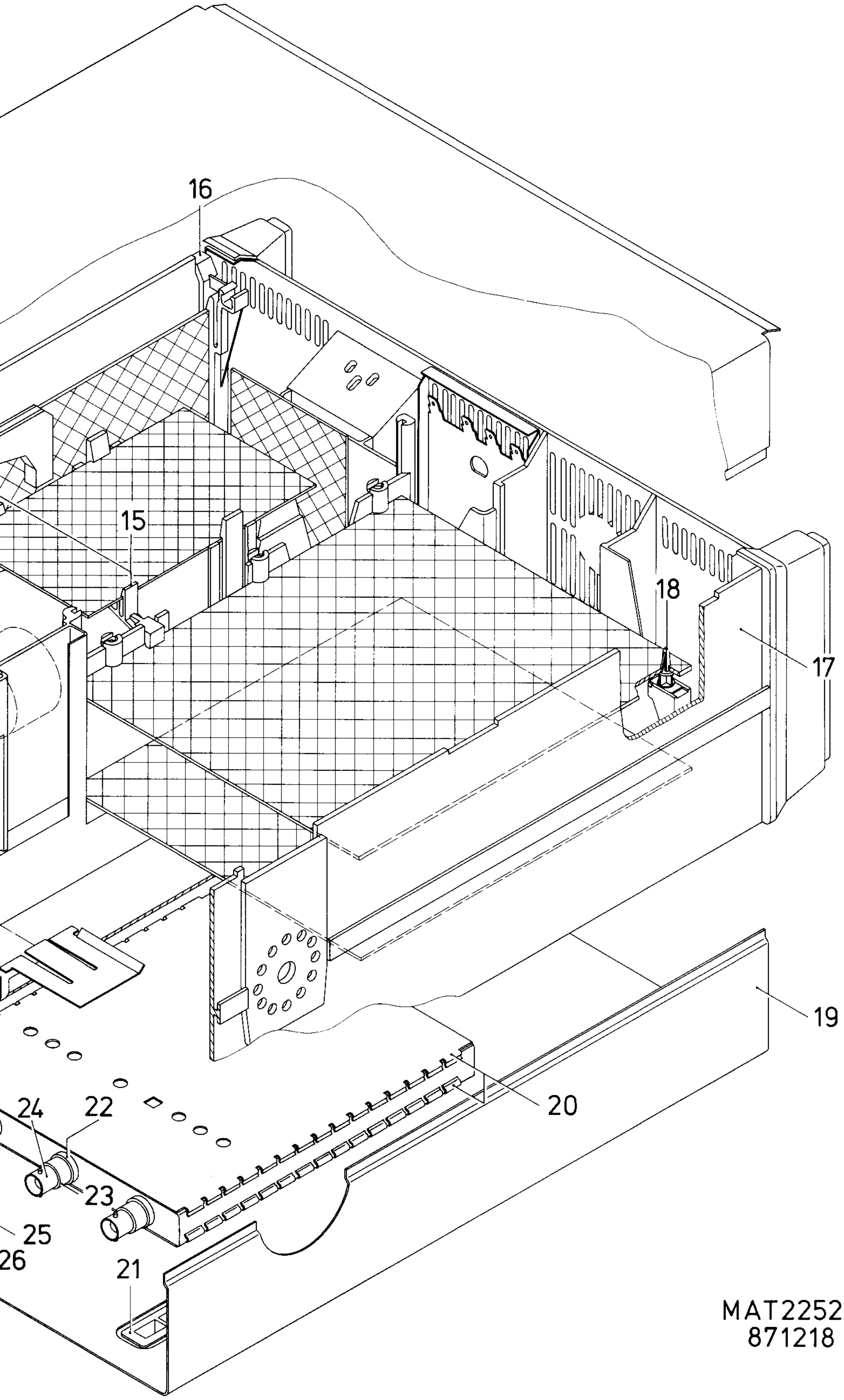
16
15
18
17
19
20
24
22
23
25
26
21

MAT2252A
871218

Figure 16.1 Exploded view

16.1.2 Mechanical pa

Item	Qty
1	2
2	1
3	4
4	1
5	1
	1
	1
	1
	1
6	1
7	1

16.1.3 Mechanical pa

Item	Qty
1	1
2	1
3	1
4	1
5	1
6	1

16.2 UNITS (see fi

Item	Uni
1	A1
2	A2
3	A3
4	A4
5	A5
6	A6
7	A7
8	A8

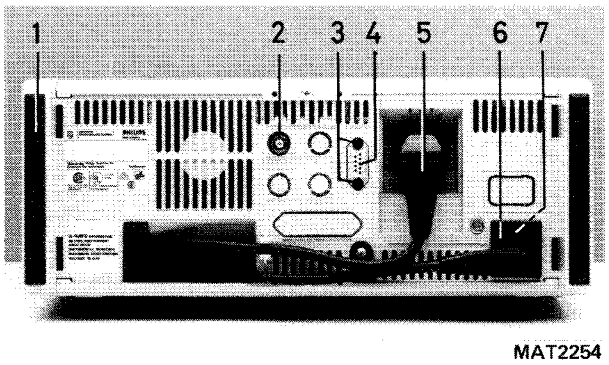
1
2
3
4
5
6
7
MAT2254

Figure 16.2 Rear view

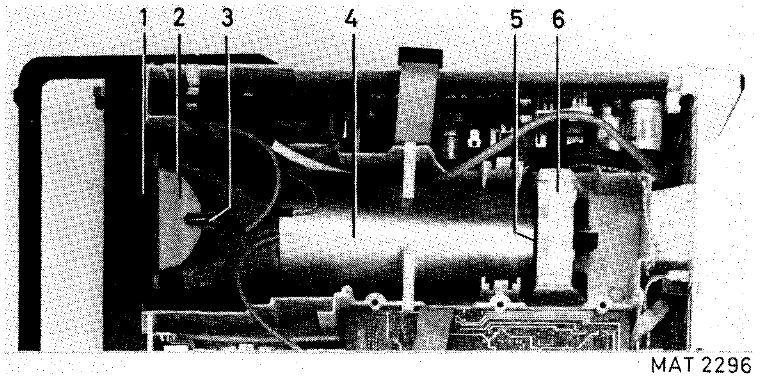
1
2
3
4
5
6
MAT 2296

Figure 16.3 Inside view showing the parts in the

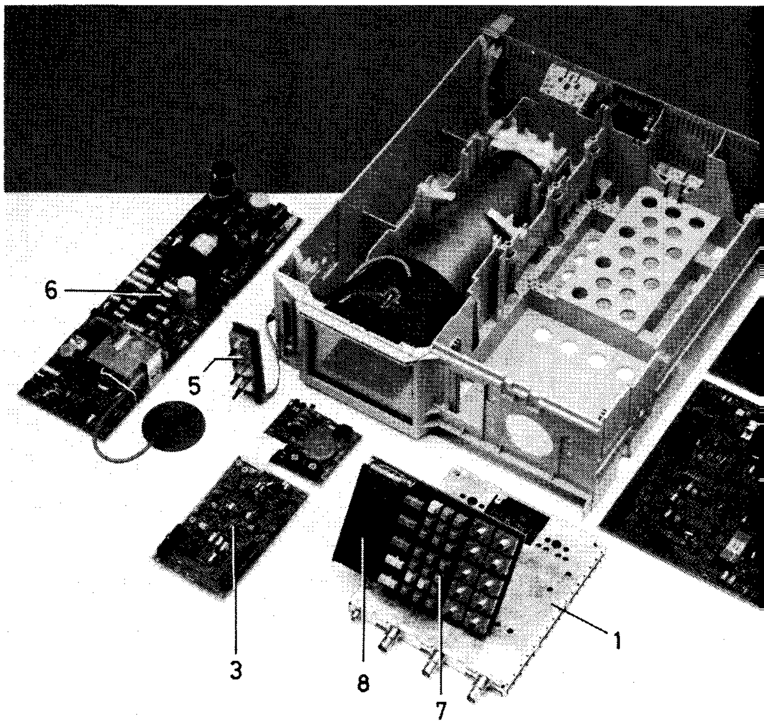

Figure 16.4 View of the units

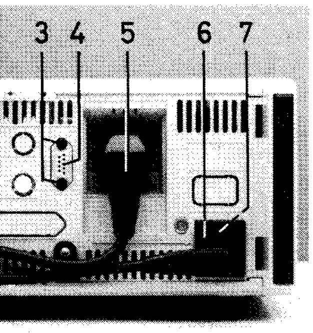
3
4
5
6
7
MAT2254

iew

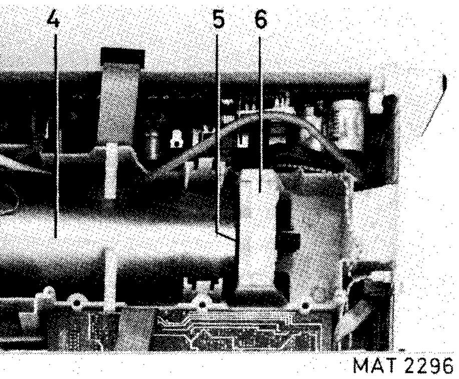
4
5
6
MAT 2296

view showing the parts in the CRT compartiment

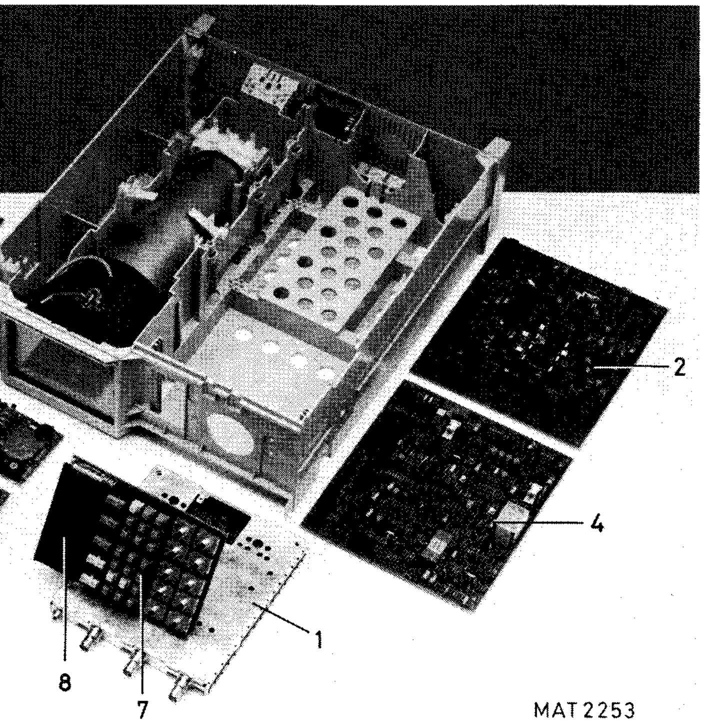
2
4
1
8
7
MAT 2253

the units

16.1.2 Mechanical pa

Item	Qty
1	2
2	1
3	4
4	1
5	1
	1
	1
	1
	1
6	1
7	1

16.1.3 Mechanical pa

Item	Qty
1	1
2	1
3	1
4	1
5	1
6	1

16.2 UNITS (see fi

Item	Uni
1	A1
2	A2
3	A3
4	A4
5	A5
6	A6
7	A7
8	A8

16.1.2 Mechanical parts indicated in figure 16.2

Item	Qty	Ordering code	Description
1	2	5322 462 50324	Rear foot
2	1	5322 267 10004	BNC socket for Z-MOD
3	4	5322 502 12003	Screw for Remote control socket and Mains socket
4	1	5322 321 22665	Remote control socket, incl. cable
5	1	5322 321 21616	Line cable, European version
	1	5322 321 10446	Line cable, USA version
	1	5322 321 21617	Line cable, British version
	1	5322 321 21618	Line cable, Swiss version
	1	5322 321 21781	Line cable, Australean version
6	1	5322 219 81119	Mains input socket, incl. fuse holder
7	1	4822 253 30024	Fuse 1,6A (for mains input)

16.1.3 Mechanical parts indicated in figure 16.3

Item	Qty	Ordering code	Description
1	1	5322 460 60404	CRT front rubber
2	1	5322 462 40957	Light conductor for CRT
3	1	5322 134 40534	Lamp 28V-40mA
4	1	5322 466 30163	CRT shielding
5	1	5322 466 30164	CRT manchet, rubber
6	1	5322 462 10263	CRT support

16.2 UNITS (see figure 16.4)

Item	Unit nr.	Ordering code	Description
1	A1	5322 216 51114	Attenuator unit
2	A2	5322 216 51116	Pre-amplifier unit
3	A3	5322 216 51117	XYZ-amplifier unit
4	A4	5322 216 51115	Time-base unit
5	A5	5322 216 51118	CRT-control unit
6	A6	5322 216 51119	Power supply unit
7	A7	5322 216 51113	Front unit
8	A8	5322 216 51121	LCD unit

16.3 CABLES AND CONNECTORS

16.3.1 Flatcables and connectors

For the flatcables used in this oscilloscope, the required version must be made by yourself with the following parts:

- Universal flatcable, 40 wires, length 60 cm	5322 323 50112

To get the required number of wires, the flat cable must be split by means of a pair of scissors or a knife.
The cable must be cut to the required length.

- Flatcable connectors

The connectors can be mounted on the flatcable by means of a pair of pliers or in a bench-vice.

ATTENTION: check the position of the flatcable in the connector before pressing the connector together.

The following connectors are available:

10 pole cable connector	X4016-X5007-X6007	5322 268 40234
20 pole cable connector	X2010-X3002-X3003 X4002-X4010-X6009	5322 268 40235
26 pole cable connector	X1009-X2009	5322 267 70175
34 pole cable connector	X2001-X4001-X7001	5322 268 40236

The following AMP-connectors are available:

2 pole-single, without contact pins	5322 268 40232
3 pole-single, without contact pins	5322 268 40233
bus contact for AMP-cable connector, per piece:	5322 268 20152
5 pole connector for power-in:	5322 267 50452
bus contact for connector, per piece:	5322 268 24128
- Flatcable connector clamp	5233 401 11156

16.3.2 P.c.b.-connectors (male headers)

Type	Item	Ordering number
2 pole-single	X2013-X4017-X6020	5322 265 20275
3 pole-single	X6006-X6019	5322 265 30434
3 pole single	X6018 (power supply)	5322 265 40435
3 pole-single 90° type	X2004-X3004-X3005-X3008	5322 265 30433
5 pole-single	X6014	5322 265 40436
10 pole-double	X4016-X5007-X6007	5322 265 40485
20 pole-double	X2010-X3002-X3003	5322 265 51129
26 pole-double	X1009-X2009	5322 265 61071
34 pole-double	X2001-X4001	5322 265 61069
34 pole-double 90° type	X7001	5322 265 61068
CRT-socket	X3006	5322 255 40502

16.3.3 Miscelleneous cables

- Delay line cable, 54 cm long	5322 321 21595
- Flex jump cable, used for interconnection for A3 - 11 pole.	5322 290 60605

16.4 ELECTRICAL PARTS

16.4.1 CAPACITORS

POSNR	DESCRIPTION	ORDERING CODE
C 201	-20+50% 10NF	4822 122 31414
C 202	2% 100PF	4822 122 31316
C 203	7-10.0 PF	5322 125 11013
C 204	10% 1NF	4822 122 30027
C 251	-10+50% 68UF	4822 124 20689
C 252	-20+50% 10NF	4822 122 31414
C 253	-20+50% 10NF	4822 122 31414
C 254	-10+50% 68UF	4822 124 20689
C 256	-20+50% 10NF	4822 122 31414
C 257	-20+50% 10NF	4822 122 31414
C 421	-20+50% 10NF	4822 122 31414
C 422	-20+50% 10NF	4822 122 31414
C 423	-20+50% 10NF	4822 122 31414
C 1001	-20+50% 10NF	4822 122 31414
C 1002	400V 10% 22NF	5322 121 40308
C 1003	-20+50% 10NF	4822 122 31414
C 1004	-20+50% 10NF	4822 122 31414
C 1006	-20+50% 10NF	4822 122 31414
C 1009	2% 33PF	5322 122 32072
C 1011	63V 10% 220NF	5322 121 43084
C 1012	63V 10% 220NF	5322 121 43084
C 1013	2% 15PF	4822 122 31823
C 1016	0.25PF 3.3PF	5322 122 32549
C 1017	0.25PF 3.3PF	4822 122 31821
C 1018	0.25PF 2.7PF	5322 122 32894
C 1019	2% 33PF	5322 122 32072
C 1021	-20+50% 10NF	4822 122 31414
C 1022	2% 22PF	5322 122 32143
C 1023	7-10.0 PF MUR	5322 125 11013
C 1024	-20+50% 10NF	4822 122 31414
C 1026	0.25PF 3.3PF	5322 122 32549
C 1027	0.25PF 2.2PF	5322 122 32774
C 1028	2% 33PF	5322 122 32072
C 1029	7-10.0 PF MUR	5322 125 11013
C 1031	-20+50% 10NF	4822 122 31414
C 1032	2% 33PF	5322 122 32551
C 1033	7-10.0 PF MUR	5322 125 11013
C 1034	-20+50% 10NF	4822 122 31414
C 1035	-20+50% 10NF	4822 122 31414
C 1036	2% 39PF	4822 122 31069
C 1037	2% 22PF	5322 122 32143
C 1038	2% 100PF	4822 122 31316
C 1039	0.25PF 2.2PF	4822 122 31036
C 1041	63V 10% 100NF	5322 121 43083
C 1042	-20+50% 10NF	4822 122 31414
C 1043	-20+50% 10NF	4822 122 31414
C 1044	-20+50% 10NF	4822 122 31414
C 1045	-20+50% 10NF	4822 122 31414
C 1046	-10+50% 68UF	4822 124 20689
C 1047	0.25PF 4.7PF	4822 122 31822
C 1061	10% 470PF	4822 122 30034
C 1062	0.25PF 3.3PF	4822 122 31821
C 1063	2% 33PF	5322 122 32072
C 1064	10% 680PF	4822 122 30053
C 1067	2% 68PF	4822 122 31349
C 1068	-20+50% 10NF	4822 122 31414
C 1071	-20+50% 10NF	4822 122 31414
C 1072	-20+50% 10NF	4822 122 31414
C 1076	10% 1.5NF	4822 122 31169
C 1077	10% 1.5NF	4822 122 31169
C 1101	-20+50% 10NF	4822 122 31414
C 1102	400V 10% 22NF	5322 121 40308
C 1103	-20+50% 10NF	4822 122 31414
C 1104	-20+50% 10NF	4822 122 31414
C 1106	-20+50% 10NF	4822 122 31414
C 1109	2% 33PF	5322 122 32072
C 1111	63V 10% 220NF	5322 121 43084
C 1112	63V 10% 220NF	5322 121 43084
C 1113	2% 15PF	4822 122 31823
C 1116	0.25PF 3.3PF	5322 122 32549
C 1117	0.25PF 3.3PF	4822 122 31821
C 1118	0.25PF 2.7PF	5322 122 32894
C 1119	2% 33PF	5322 122 32072
C 1121	-20+50% 10NF	4822 122 31414
C 1122	2% 22PF	5322 122 32143
C 1123	7-10.0 PF	5322 125 11013
C 1124	-20+50% 10NF	4822 122 31414
C 1126	0.25PF 3.3PF	5322 122 32549
C 1127	0.25PF 2.2PF	5322 122 32774
C 1128	2% 33PF	5322 122 32072
C 1129	7-10.0 PF	5322 125 11013
C 1131	-20+50% 10NF	4822 122 31414
C 1132	2% 33PF	5322 122 32551
C 1133	7-10.0 PF	5322 125 11013
C 1134	-20+50% 10NF	4822 122 31414
C 1135	-20+50% 10NF	4822 122 31414
C 1136	2% 39PF	4822 122 31069
C 1137	2% 22PF	5322 122 32143
C 1138	2% 100PF	4822 122 31316
C 1139	0.25PF 2.2PF	4822 122 31036
C 1141	63V 10% 100NF	5322 121 43083
C 1142	-20+50% 10NF	4822 122 31414
C 1143	-20+50% 10NF	4822 122 31414
C 1144	-20+50% 10NF	4822 122 31414
C 1145	-20+50% 10NF	4822 122 31414
C 1146	-10+50% 68UF	4822 124 20689
C 1147	0.25PF 4.7PF	4822 122 31822
C 1161	10% 470PF	4822 122 30034
C 1162	0.25PF 3.3PF	4822 122 31821
C 1163	2% 33PF	5322 122 32072
C 1164	10% 680PF	4822 122 30053
C 1167	2% 68PF	4822 122 31349
C 1168	-20+50% 10NF	4822 122 31414
C 1171	-20+50% 10NF	4822 122 31414
C 1172	-20+50% 10NF	4822 122 31414
C 1176	10% 1.5NF	4822 122 31169
C 1177	10% 1.5NF	4822 122 31169
C 1201	-20+50% 10NF	4822 122 31414
C 1202	400V 10% 22NF	5322 121 40308
C 1203	2% 33PF	5322 122 32551
C 1204	0.25PF 3.9PF	4822 122 31217
C 1206	7-10.0 PF	5322 125 11013
C 1207	2% 22PF	5322 122 32143
C 1208	-20+50% 10NF	4822 122 31414
C 1210	0.25PF 0.56PF	5322 122 32107
C 1211	-20+50% 10NF	4822 122 31414
C 1212	2% 100PF	4822 122 31316
C 1216	0.25PF 4.7PF	4822 122 31822
C 1217	-20+50% 10NF	4822 122 31414
C 1401	-20+50% 10NF	4822 122 31414
C 1402	-20+50% 10NF	4822 122 31414
C 1403	-20+50% 10NF	4822 122 31414
C 1404	-10+50% 68UF	4822 124 20689
C 1405	-20+50% 10NF	4822 122 31414
C 1407	-20+50% 10NF	4822 122 31414
C 1408	-20+50% 10NF	4822 122 31414
C 1409	-10+50% 68UF	4822 124 20689
C 1411	-20+50% 10NF	4822 122 31414
C 1412	-20+50% 10NF	4822 122 31414
C 1413	-10+50% 47UF	4822 124 20699
C 1414	-20+50% 10NF	4822 122 31414
C 1420	-20+50% 10NF	4822 122 31414
C 1421	-20+50% 10NF	4822 122 31414
C 1422	-20+50% 10NF	4822 122 31414
C 1423	-20+50% 10NF	4822 122 31414
C 1424	-10+50% 68UF	4822 124 20689
C 1427	-20+50% 10NF	4822 122 31414
C 1428	-20+50% 10NF	4822 122 31414
C 1429	-10+50% 68UF	4822 124 20689
C 1431	-20+50% 10NF	4822 122 31414
C 1432	-20+50% 10NF	4822 122 31414
C 1433	-10+50% 47UF	4822 124 20699
C 1434	-20+50% 10NF	4822 122 31414
C 1441	-20+50% 10NF	4822 122 31414
C 1442	-10+50% 68UF	4822 124 20689
C 1443	-20+50% 10NF	4822 122 31414
C 1444	-20+50% 10NF	4822 122 31414
C 1446	-10+50% 68UF	4822 124 20689
C 1447	-20+50% 10NF	4822 122 31414
C 2049	10% 1.5NF	4822 122 31169
C 2050	-20+50% 10NF	4822 122 31414
C 2051	10% 1.5NF	4822 122 31169
C 2149	10% 1.5NF	4822 122 31169
C 2150	-20+50% 10NF	4822 122 31414
C 2151	10% 1.5NF	4822 122 31169
C 2201	-20+50% 10NF	4822 122 31414
C 2203	-20+50% 10NF	4822 122 31414
C 2207	-20+50% 10NF	4822 122 31414
C 2215	0.25PF 3.9PF	5322 122 34107
C 2216	0.25PF 2.7PF	4822 122 31038
C 2217	-20+50% 10NF	4822 122 31414
C 2218	0.25PF 2.7PF	4822 122 31038
C 2220	0.25PF 5.6PF	5322 122 32163
C 2221	10% 1.5NF	4822 122 31169
C 2222	0.25PF 8.2PF	4822 122 31052
C 2223	10% 1.5NF	4822 122 31169

POSNR	DESCRIPTION	ORDERING CODE
C 2224	10% 1.5NF	4822 122 31169
C 2225	10% 470PF	4822 122 30034
C 2226	10% 470PF	4822 122 30034
C 2229	10% 470PF	4822 122 30034
C 2230	10% 470PF	4822 122 30034
C 2305	-20+50% 10NF	4822 122 31414
C 2306	10% 1.5NF	4822 122 31169
C 2307	10% 1.5NF	4822 122 31169
C 2317	0.25PF 1.5PF	5322 122 32101
C 2318	10% 470PF	4822 122 30034
C 2321	0.25PF 1.5PF	5322 122 32101
C 2326	-20+50% 10NF	4822 122 31414
C 2327	-20+50% 10NF	4822 122 31414
C 2328	63V 10% 100NF	5322 121 43083
C 2329	63V 10% 100NF	5322 121 43083
C 2331	63V 10% 100NF	5322 121 43083
C 2332	63V 10% 100NF	5322 121 43083
C 2333	63V 10% 100NF	5322 121 43083
C 2335	2% 12PF	4822 122 31056
C 2336	-20+50% 10NF	4822 122 31414
C 2337	-20+50% 10NF	4822 122 31414
C 2338	10% 470PF	4822 122 30034
C 2342	2% 22PF	5322 122 32143
C 2345	0.25PF 01.8PF	5322 122 32162
C 2346	10% 1.5NF	4822 122 31169
C 2348	10% 1.5NF	4822 122 31169
C 2350	0.25PF 2.7PF	4822 122 31038
C 2507	-20+50% 10NF	4822 122 31414
C 2510	2% 22PF	5322 122 32143
C 2516	0.25PF 2.7PF	4822 122 31038
C 2517	10% 470PF	4822 122 30034
C 2518	0.25PF 2.7PF	4822 122 31038
C 2519	2% 15PF	4822 122 31823
C 2600	2% 22PF	5322 122 32143
C 2601	63V 10% 100NF	5322 121 43083
C 2602	-20+50% 10NF	4822 122 31414
C 2604	10% 1.5NF	4822 122 31169
C 2611	10% 1NF	4822 122 30027
C 2612	-20+50% 10NF	4822 122 31414
C 2613	10% 470PF	4822 122 30034
C 2616	10% 470PF	4822 122 30034
C 2701	-10+50% 100UF	4822 124 20679
C 2702	-20+50% 10NF	4822 122 31414
C 2703	-20+50% 10NF	4822 122 31414
C 2704	-20+50% 10NF	4822 122 31414
C 2706	-10+50% 100UF	4822 124 20679
C 2707	-20+50% 10NF	4822 122 31414
C 2708	-20+50% 10NF	4822 122 31414
C 2709	-20+50% 10NF	4822 122 31414
C 2711	-20+50% 10NF	4822 122 31414
C 2716	-10+50% 68UF	4822 124 20689
C 2717	-20+50% 10NF	4822 122 31414
C 2718	-20+50% 10NF	4822 122 31414
C 2722	-20+50% 10NF	4822 122 31414
C 2726	-10+50% 68UF	4822 124 20689
C 2727	-20+50% 10NF	4822 122 31414
C 2728	-20+50% 10NF	4822 122 31414
C 2741	-20+50% 10NF	4822 122 31414
C 2744	-20+50% 10NF	4822 122 31414
C 2746	-20+50% 10NF	4822 122 31414
C 2747	-10+50% 68UF	4822 124 20689
C 2748	-20+50% 10NF	4822 122 31414
C 2751	-10+50% 47UF	4822 124 20699
C 2752	-20+50% 10NF	4822 122 31414
C 2753	-20+50% 10NF	4822 122 31414
C 2754	-20+50% 10NF	4822 122 31414
C 2761	-20+50% 10NF	4822 122 31414
C 2762	-20+50% 10NF	4822 122 31414
C 2764	-20+50% 10NF	4822 122 31414
C 2771	-20+50% 10NF	4822 122 31414
C 2772	-10+50% 150UF	4822 124 20672
C 2773	-20+50% 10NF	4822 122 31414
C 2774	-10+50% 68UF	4822 124 20689
C 2776	-20+50% 10NF	4822 122 31414
C 2777	63V 10% 100NF	5322 121 43083
C 2781	-20+50% 10NF	4822 122 31414
C 3001	-20+50% 10NF	4822 122 31414
C 3002	10% 1.5NF	4822 122 31169
C 3003	10% 1.5NF	4822 122 31169
C 3004	7-10.0 PF MUR	5322 125 11013
C 3005	2-20PF MUR	5322 125 50296
C 3007	7-10.0 PF MUR	5322 125 11013
C 3009	2% 12PF	4822 122 31056
C 3011	2% 68PF	4822 122 31349
C 3013	0.25PF 2.7PF	4822 122 31038
C 3014	0.25PF 2.7PF	4822 122 31038
C 3016	2-20PF MUR	5322 125 50296
C 3017	-20+50% 10NF	4822 122 31414
C 3018	0.25PF 5.6PF	5322 122 32163
C 3021	-20+50% 10NF	4822 122 31414

POSNR	DESCRIPTION	ORDERING CODE
C 3022	-20+50% 10NF	4822 122 31414
C 3101	10% 1.5NF	4822 122 31169
C 3102	10% 1.5NF	4822 122 31169
C 3104	100V 10% 47NF	5322 121 43088
C 3105	-20+50% 10NF	4822 122 31414
C 3106	63V 10% 100NF	5322 121 43083
C 3107	0.25PF 2.7PF	4822 122 31038
C 3108	0.25PF 0.82PF	4822 122 31214
C 3109	63V 10% 100NF	5322 121 43083
C 3110	-20+50% 10NF	4822 122 31414
C 3111	-20+50% 10NF	4822 122 31414
C 3113	0.25PF 0.82PF	4822 122 31214
C 3114	100V 10% 47NF	5322 121 43088
C 3116	63V 10% 100NF	5322 121 43083
C 3200	0.25PF 0.56PF	5322 122 32107
C 3201	0.25PF 0.56PF	5322 122 32107
C 3202	63V 10% 100NF	5322 121 43083
C 3203	63V 10% 100NF	5322 121 43083
C 3204	-20+50% 10NF	4822 122 31414
C 3206	63V 10% 100NF	5322 121 43083
C 3208	10% 470PF	4822 122 30034
C 3209	-20+50% 2.2NF	5322 122 50093
C 3211	-20+50% 2.2NF	5322 122 50093
C 3250	100V 10% 10NF	5322 121 43086
C 3251	63V 10% 220NF	5322 121 43084
C 3252	-20+50% 2.2NF	5322 122 50093
C 3253	-20+50% 10NF	4822 122 31414
C 3254	-20+50% 10NF	4822 122 31414
C 3256	0.25PF 0.56PF	5322 122 32107
C 3257	-20+50% 10NF	4822 122 31414
C 3258	-20+50% 2.2NF	5322 122 50093
C 3301	-20+50% 10NF	4822 122 31414
C 3302	-20+50% 10NF	4822 122 31414
C 3303	-10+50% 47UF	4822 124 20699
C 3304	-20+50% 10NF	4822 122 31414
C 3306	-20+50% 10NF	4822 122 31414
C 3307	-20+50% 10NF	4822 122 31414
C 3308	-20+50% 10NF	4822 122 31414
C 3309	-20+50% 10NF	4822 122 31414
C 3311	-20+50% 10NF	4822 122 31414
C 3312	-10+50% 47UF	4822 124 20699
C 3313	-20+50% 10NF	4822 122 31414
C 3314	-10+50% 15UF	4822 124 20729
C 3316	-20+50% 10NF	4822 122 31414
C 3317	-20+50% 10NF	4822 122 31414
C 3318	-20+50% 10NF	4822 122 31414
C 3319	-10+50% 15UF	4822 124 20729
C 3321	-20+50% 10NF	4822 122 31414
C 3322	-20+50% 10NF	4822 122 31414
C 3324	-20+50% 10NF	4822 122 31414
C 3326	-20+50% 10NF	4822 122 31414
C 4001	63V 10% 100NF	5322 121 43083
C 4002	-10+50% 47UF	4822 124 20699
C 4003	63V 10% 100NF	5322 121 43083
C 4004	-20+50% 10NF	4822 122 31414
C 4005	-20+50% 10NF	4822 122 31414
C 4006	10% 4.7NF	4822 122 31125
C 4007	10% 4.7NF	4822 122 31125
C 4008	10% 470PF	4822 122 30034
C 4009	0.25PF 3.9PF	5322 122 34107
C 4011	2% 100PF	4822 122 31316
C 4020	63V 10% 100NF	5322 121 43083
C 4021	-10+50% 47UF	4822 124 20699
C 4022	-20+50% 10NF	4822 122 31414
C 4023	-20+50% 10NF	4822 122 31414
C 4024	2% 47PF	4822 122 31072
C 4026	0.25PF 3.9PF	5322 122 34107
C 4027	2% 100PF	4822 122 31316
C 4028	2% 100PF	4822 122 31316
C 4029	2% 100PF	4822 122 31316
C 4101	-20+50% 10NF	4822 122 31414
C 4103	-20+50% 10NF	4822 122 31414
C 4105	63V 10% 100NF	5322 121 43083
C 4106	-10+50% 150UF	4822 124 20672
C 4107	-20+50% 10NF	4822 122 31414
C 4108	2% 100PF	4822 122 31316
C 4109	-20+50% 10NF	4822 122 31414
C 4110	63V 10% 470NF	5322 121 43085
C 4112	-20+50% 10NF	4822 122 31414
C 4113	630V 1% 1NF	4822 121 50591
C 4114	100V 10% 10UF	5322 121 41727
C 4116	10% 1.5NF	4822 122 31169
C 4117	2% 100PF	4822 122 31316
C 4118	-20+50% 10NF	4822 122 31414
C 4120	100V 10% 47NF	5322 121 43088
C 4122	63V 10% 100NF	5322 121 43083
C 4123	-10+50% 47UF	4822 124 20699
C 4124	-20+50% 10NF	4822 122 31414
C 4126	-10+50% 47UF	4822 124 20699
C 4201	-20+50% 10NF	4822 122 31414

POSNR	DESCRIPTION	ORDERING CODE
C 4209	-20+50% 10NF	4822 122 31414
C 4212	-20+50% 10NF	4822 122 31414
C 4213	630V 1% 1NF	4822 121 50591
C 4214	63V 10% 100NF	5322 121 43083
C 4216	10% 1.5NF	4822 122 31169
C 4217	2% 100PF	4822 122 31316
C 4301	63V 10% 100NF	5322 121 43083
C 4302	-10+50% 4.7UF	4822 124 20726
C 4303	100V 10% 10NF	5322 121 43086
C 4304	2% 330PF	4822 122 31353
C 4306	-20+50% 10NF	4822 122 31414
C 4307	-20+50% 10NF	4822 122 31414
C 4311	2% 100PF	4822 122 31316
C 4400	10% 1NF	4822 122 30027
C 4401	-20+50% 10NF	4822 122 31414
C 4402	10% 1NF	4822 122 30027
C 4403	63V 10% 100NF	5322 121 43083
C 4404	63V 10% 100NF	5322 121 43083
C 4405	-20+50% 10NF	4822 122 31414
C 4406	63V 10% 100NF	5322 121 43083
C 4407	63V 10% 100NF	5322 121 43083
C 4408	63V 10% 100NF	5322 121 43083
C 4409	-20+50% 10NF	4822 122 31414
C 4411	-20+50% 10NF	4822 122 31414
C 4412	-20+50% 10NF	4822 122 31414
C 4413	-20+50% 10NF	4822 122 31414
C 4414	-20+50% 10NF	4822 122 31414
C 4416	10% 680PF	4822 122 30053
C 4418	63V 10% 100NF	5322 121 43083
C 4419	-20+50% 10NF	4822 122 31414
C 4421	63V 10% 100NF	5322 121 43083
C 4501	-20+50% 10NF	4822 122 31414
C 4502	-20+50% 10NF	4822 122 31414
C 4503	0.25PF 3.9PF	5322 122 34107
C 4521	63V 10% 100NF	5322 121 43083
C 4522	63V 10% 100NF	5322 121 43083
C 4601	63V 10% 100NF	5322 121 43083
C 4602	0.25PF 8.2PF	4822 122 31052
C 4603	0.25PF 8.2PF	4822 122 31052
C 4611	-20+50% 10NF	4822 122 31414
C 4612	-20+50% 10NF	4822 122 31414
C 4613	2% 10PF	4822 122 32185
C 4701	10% 1NF	4822 122 30027
C 4702	63V 10% 100NF	5322 121 43083
C 4703	10% 1NF	4822 122 30027
C 4704	-20+50% 10NF	4822 122 31414
C 4804	-10+50% 150UF	4822 124 20672
C 4807	-20+50% 10NF	4822 122 31414
C 4808	-10+50% 68UF	4822 124 20689
C 4811	-20+50% 10NF	4822 122 31414
C 4812	-10+50% 47UF	4822 124 20699
C 4813	-20+50% 10NF	4822 122 31414
C 4815	-20+50% 10NF	4822 122 31414
C 4816	-20+50% 10NF	4822 122 31414
C 4817	-20+50% 10NF	4822 122 31414
C 4818	-20+50% 10NF	4822 122 31414
C 4819	-20+50% 10NF	4822 122 31414
C 4820	-20+50% 10NF	4822 122 31414
C 4821	-20+50% 10NF	4822 122 31414
C 4822	-20+50% 10NF	4822 122 31414
C 4824	-20+50% 10NF	4822 122 31414
C 4825	-20+50% 10NF	4822 122 31414
C 4826	-20+50% 10NF	4822 122 31414
C 4828	-20+50% 10NF	4822 122 31414
C 4829	-20+50% 10NF	4822 122 31414
C 4830	-20+50% 10NF	4822 122 31414
C 4831	-20+50% 10NF	4822 122 31414
C 4832	-10+50% 47UF	4822 124 20699
C 4833	-20+50% 10NF	4822 122 31414
C 4835	-20+50% 10NF	4822 122 31414
C 4836	-20+50% 10NF	4822 122 31414
C 4837	-10+50% 47UF	4822 124 20699
C 4838	-10+50% 47UF	4822 124 20699
C 4839	2% 12PF	4822 122 31056
C 4841	2% 12PF	4822 122 31056
C 5001	-20+50% 10NF	4822 122 31414
C 5002	-20+50% 10NF	4822 122 31414
C 5003	-20+50% 10NF	4822 122 31414
C 5004	-20+50% 10NF	4822 122 31414
C 5006	-20+50% 10NF	4822 122 31414
C 6001	250V 10% 220NF	5322 121 44142
C 6002	ME275 20% 1NF	5322 121 42583
C 6003	63V 10% 100NF	5322 121 43083
C 6004	63V 10% 100NF	5322 121 43083
C 6005	-20+50% 1.5NF	5322 122 50092

POSNR	DESCRIPTION	ORDERING CODE
C 6006	ME275 20% 1NF	5322 121 42583
C 6007	-20+20% 68UF	5322 124 21938
C 6008	-20+20% 68UF	5322 124 21938
C 6009	63V 10% 100NF	5322 121 43083
C 6011	-10+50% 33UF	4822 124 20712
C 6012	2% 220PF	4822 122 30094
C 6013	10% 4.7NF	4822 122 31125
C 6014	160V 1% 33NF	5322 121 50997
C 6017	2000V 5% 1.5NF	4822 121 40541
C 6018	10% 4.7NF	4822 122 31125
C 6031	10% 2.2NF	4822 122 30114
C 6032	63V 10% 220NF	5322 121 43084
C 6033	10% 4.7NF	4822 122 31125
C 6041	63V 10% 100NF	5322 121 43083
C 6042	63V 10% 100NF	5322 121 43083
C 6100	20% 6800UF	4822 124 40692
C 6101	20% 6800UF	4822 124 40692
C 6102	-10+50% 680UF	4822 124 20685
C 6103	-10+50% 680UF	4822 124 20685
C 6104	-10+50% 220UF	4822 124 20681
C 6106	-10+50% 470UF	4822 124 20695
C 6107	-10+50% 150UF	4822 124 20691
C 6108	-10+50% 470UF	4822 124 20695
C 6109	-10+50% 150UF	4822 124 20691
C 6111	-10+50% 220UF	4822 124 20704
C 6112	-10+50% 100UF	4822 124 20701
C 6113	-10+50% 100UF	4822 124 20701
C 6114	-10+50% 100UF	4822 124 20701
C 6116	-10+50% 68UF	4822 124 20734
C 6117	-10+50% 22UF	4822 124 20731
C 6119	-10+50% 22UF	4822 124 20731
C 6120	-20+50% 10NF	4822 122 31414
C 6121	-10+50% 22UF	4822 124 20731
C 6122	630V 1% 680PF	5322 121 51214
C 6131	63V 10% 470NF	5322 121 43085
C 6132	-10+50% 100UF	4822 124 20679
C 6133	63V 10% 100NF	5322 121 43083
C 6134	10% 1NF	4822 122 30027
C 6135	-20+50% 10NF	4822 122 31414
C 6201	100V 10% 47NF	5322 121 43088
C 6202	2% 47PF	4822 122 31072
C 6203	63V 10% 220NF	5322 121 43084
C 6204	63V 10% 100NF	5322 121 43083
C 6205	100V 10% 22NF	5322 121 43087
C 6206	10% 1NF	4822 122 30027
C 6207	10% 4.7NF	4822 122 31125
C 6208	-10+50% 68UF	4822 124 20734
C 6209	-20+50% 2.2NF	5322 122 50093
C 6211	-20+50% 10NF	5322 122 50091
C 6212	-10+10% 33PF	5322 122 33081
C 6213	10% 4.7NF	4822 122 31125
C 6214	20% 470PF	5322 122 50086
C 6311	-20+50% 10NF	4822 122 31414
C 6312	-20+50% 10NF	4822 122 31414
C 6401	63V 10% 100NF	5322 121 43083
C 6402	-10+50% 68UF	4822 124 20689
C 6500	-10+50% 68UF	4822 124 20689
C 6501	-20+50% 10NF	4822 122 31414
C 6502	100V 10% 10NF	5322 121 43086
C 6503	2% 100PF	4822 122 31316
C 6506	2% 100PF	4822 122 31316
C 7001	63V 10% 220NF	5322 121 43084
C 7002	2% 39PF	4822 122 31069
C 7003	2% 39PF	4822 122 31069
C 7004	-20+50% 10NF	4822 122 31414
C 7005	63V 10% 100NF	5322 121 43083
C 7006	-20+50% 10NF	4822 122 31414
C 7007	63V 10% 100NF	5322 121 43083
C 7008	10% 680PF	4822 122 30053
C 7009	63V 10% 100NF	5322 121 43083
C 7011	-20+50% 10NF	4822 122 31414
C 7012	-20+50% 10NF	4822 122 31414
C 7013	-20+50% 10NF	4822 122 31414
C 7017	-20+50% 10NF	4822 122 31414
C 7018	-20+50% 10NF	4822 122 31414
C 7019	-20+50% 10NF	4822 122 31414
C 7100	-20+50% 10NF	4822 122 31414
C 7101	63V 10% 100NF	5322 121 43083
C 7102	63V 10% 220NF	5322 121 43084
C 7103	-20+50% 10NF	4822 122 31414
C 7104	-10+50% 68UF	4822 124 20689
C 7106	-10+50% 68UF	4822 124 20689

16.4.2 RESISTORS

POSNR	DESCRIPTION	ORDERING CODE
R 201	0.3W 25% 2K2	5322 105 20033
R 202	MRS25 1% 16K2	5322 116 53589
R 203	MRS25 1% 1K33	5322 116 53512
R 204	MRS25 1% 1K33	5322 116 53512
R 206	MRS25 1% 100E	5322 116 53126
R 207	MRS25 1% 100E	5322 116 53126
R 208	MRS25 1% 7K5	4822 116 53028
R 209	0.3W 25% 2K2	5322 105 20033
R 211	MRS25 1% 348E	5322 116 53591
R 213	MRS25 1% 51E1	5322 116 53213
R 214	MRS25 1% 23K7	5322 116 53537
R 216	MRS25 1% 287E	5322 116 53221
R 217	MRS25 1% 287E	5322 116 53221
R 218	MRS25 1% 100E	5322 116 53126
R 219	MRS25 1% 825E	5322 116 53541
R 221	MRS25 1% 6K19	5322 116 53263
R 222	MRS25 1% 1K78	5322 116 53208
R 223	0,3W 1% 470E	5322 105 20028
R 224	MRS25 1% 10E	4822 116 52891
R 226	MRS25 1% 825E	5322 116 53541
R 227	MRS25 1% 1K33	5322 116 53512
R 228	MRS25 1% 287E	5322 116 53221
R 229	MRS25 1% 51E1	5322 116 53213
R 231	MRS25 1% 1K21	4822 116 52956
R 232	MRS25 1% 1K	4822 116 53108
R 233	MRS25 1% 348E	5322 116 53591
R 251	MRS25 1% 5E11	4822 116 52999
R 252	MRS25 1% 5E11	4822 116 52999
R 253	MRS25 1% 5E11	4822 116 52999
R 401	MRS25 1% 10E	4822 116 52891
R 402	MRS25 1% 10E	4822 116 52891
R 403	MRS25 1% 100E	5322 116 53126
R 404	MRS25 1% 100E	5322 116 53126
R 406	MRS25 1% 1E	4822 116 52976
R 407	MRS25 1% 10E	4822 116 52891
R 408	MRS25 1% 5K11	5322 116 53494
R 409	MRS25 1% 5K11	5322 116 53494
R 411	MRS25 1% 100E	4822 116 53108
R 421	MRS25 1% 5E11	4822 116 52999
R 422	MRS25 1% 5E11	4822 116 52999
R 423	MRS25 1% 5E11	4822 116 52999
R 1001	MRS25 1% 1K	4822 116 53108
R 1002	MRS25 1% 42E2	5322 116 53515
R 1003	MRS25 1% 61E9	5322 116 53645
R 1004	0.25% 10K1	5322 116 53404
R 1006	MRS25 1% 61E9	5322 116 53645
R 1007	0.25% 900K	5322 116 53414
R 1008	MRS25 1% 10K	4822 116 53022
R 1009	MRS25 1% 21K5	5322 116 53241
R 1011	0.25% 111K	5322 116 53409
R 1012	0.25% 750K	5322 116 53588
R 1013	0.25% 1M	5322 116 53398
R 1014	MRS25 1% 10K	4822 116 53022
R 1016	MRS25 1% 21K5	5322 116 53241
R 1017	0.25% 250K	5322 116 53587
R 1018	MRS25 1% 10E	4822 116 52891
R 1019	0.25% 990K	5322 116 53415
R 1022	MRS25 1% 61E9	5322 116 53645
R 1023	VR25 10% 22M	5322 116 51785
R 1024	MRS25 1% 10E	4822 116 52891
R 1026	MRS25 1% 51E1	5322 116 53213
R 1027	VR25 10% 22M	5322 116 51785
R 1028	MRS25 1% 10E	4822 116 52891
R 1029	0.25% 1M	5322 116 53398
R 1031	VR25 10% 22M	5322 116 51785
R 1032	MRS25 1% 10E	4822 116 52891
R 1033	VR25 10% 22M	5322 116 51785
R 1034	MRS25 1% 1M	4822 116 52843
R 1035	MRS25 1% 100E	5322 116 53126
R 1036	0.3W 25% 22K	5322 105 20035
R 1037	MRS25 1% 100K	4822 116 52973
R 1038	VR25 10% 22M	5322 116 51785
R 1039	MRS25 1% 1K96	5322 116 53237
R 1040	MRS25 1% 287E	5322 116 53221
R 1041	MRS25 1% 1K96	5322 116 53237
R 1043	MRS25 1% 100E	5322 116 53126
R 1044	MRS25 1% 825E	5322 116 53541
R 1045	MRS25 1% 100E	5322 116 53126
R 1046	MRS25 1% 511E	5322 116 53135
R 1047	MRS25 1% 2K15	5322 116 53239
R 1048	MRS25 1% 5K11	5322 116 53494
R 1049	MRS25 1% 1K47	5322 116 53185
R 1050	MRS25 1% 100E	5322 116 53126
R 1051	MRS25 1% 681E	4822 116 53123
R 1052	MRS25 1% 1K78	5322 116 53208
R 1053	0.25% 250E	5322 116 53406
R 1054	MRS25 1% 100E	5322 116 53126
R 1055	MRS25 1% 1K78	5322 116 53208
R 1056	0.25% 375E	5322 116 53407
R 1057	0.25% 150E	5322 116 53399
R 1058	0.25% 150E	5322 116 53399
R 1061	MRS25 1% 237E	5322 116 53259
R 1062	MRS25 1% 133E	5322 116 53424
R 1063	MRS25 1% 26K1	5322 116 53261
R 1064	0.3W 25% 10K	4822 105 10455
R 1066	MRS25 1% 16K2	5322 116 53589
R 1067	MRS25 1% 12K1	4822 116 52957
R 1068	MRS25 1% 133E	5322 116 53424
R 1069	0.3W 25% 100E	5322 105 20029
R 1071	MRS25 1% 26K1	5322 116 53261
R 1072	0.3W 25% 10K	4822 105 10455
R 1073	MRS25 1% 4K64	5322 116 53212
R 1074	MRS25 1% 5K62	5322 116 53495
R 1076	0.3W 25% 100E	5322 105 20029
R 1077	MRS25 1% 31E6	5322 116 54964
R 1078	MRS25 1% 12K1	4822 116 52957
R 1079	MRS25 1% 1K62	5322 116 53257
R 1081	MRS25 1% 511E	5322 116 53135
R 1082	MRS25 1% 100K	4822 116 52973
R 1083	MRS25 1% 11K	4822 116 52907
R 1084	MRS25 1% 82K5	5322 116 53581
R 1086	MRS25 1% 12K1	4822 116 52957
R 1087	MRS25 1% 1M	4822 116 52843
R 1088	MRS25 1% 100E	5322 116 53126
R 1089	MRS25 1% 422E	5322 116 53592
R 1091	0.3W 25% 100E	5322 105 20029
R 1092	MRS25 1% 10E	4822 116 52891
R 1093	MRS25 1% 422E	5322 116 53592
R 1094	MRS25 1% 100E	5322 116 53126
R 1096	MRS25 1% 100E	5322 116 53126
R 1097	MRS25 1% 100E	5322 116 53126
R 1098	MRS25 1% 1K21	4822 116 52956
R 1099	MRS25 1% 1K21	4822 116 52956
R 1101	MRS25 1% 1K	4822 116 53108
R 1102	MRS25 1% 42E2	5322 116 53515
R 1103	MRS25 1% 61E9	5322 116 53645
R 1104	0.25% 10K1	5322 116 53404
R 1106	MRS25 1% 61E9	5322 116 53645
R 1107	0.25% 900K	5322 116 53414
R 1108	MRS25 1% 10K	4822 116 53022
R 1109	MRS25 1% 21K5	5322 116 53241
R 1111	0.25% 111K	5322 116 53409
R 1112	0.25% 750K	5322 116 53588
R 1113	0.25% 1M	5322 116 53398
R 1114	MRS25 1% 10K	4822 116 53022
R 1116	MRS25 1% 21K5	5322 116 53241
R 1117	0.25% 250K	5322 116 53587
R 1118	MRS25 1% 10E	4822 116 52891
R 1119	0.25% 990K	5322 116 53415
R 1122	MRS25 1% 61E9	5322 116 53645
R 1123	VR25 10% 22M	5322 116 51785
R 1124	MRS25 1% 10E	4822 116 52891
R 1126	MRS25 1% 51E1	5322 116 53213
R 1127	VR25 10% 22M	5322 116 51785
R 1128	MRS25 1% 10E	4822 116 52891
R 1129	0.25% 1M	5322 116 53398
R 1131	VR25 10% 22M	5322 116 51785
R 1132	MRS25 1% 10E	4822 116 52891
R 1133	VR25 10% 22M	5322 116 51785
R 1134	MRS25 1% 1M	4822 116 52843
R 1135	MRS25 1% 100E	5322 116 53126
R 1136	0.3W 25% 22K	5322 105 20035
R 1137	MRS25 1% 100K	4822 116 52973
R 1138	VR25 10% 22M	5322 116 51785
R 1139	MRS25 1% 1K96	5322 116 53237
R 1140	MRS25 1% 287E	5322 116 53221
R 1141	MRS25 1% 1K96	5322 116 53237
R 1143	MRS25 1% 100E	5322 116 53126
R 1144	MRS25 1% 825E	5322 116 53541
R 1145	MRS25 1% 100E	5322 116 53126
R 1146	MRS25 1% 511E	5322 116 53135
R 1147	MRS25 1% 2K15	5322 116 53239
R 1148	MRS25 1% 5K11	5322 116 53494
R 1149	MRS25 1% 1K47	5322 116 53185
R 1150	MRS25 1% 100E	5322 116 53126
R 1151	MRS25 1% 681E	4822 116 53123
R 1152	MRS25 1% 1K78	5322 116 53208
R 1153	0.25% 250E	5322 116 53406
R 1154	MRS25 1% 100E	5322 116 53126
R 1155	MRS25 1% 1K78	5322 116 53208
R 1156	0.25% 375E	5322 116 53407
R 1157	0.25% 150E	5322 116 53399
R 1158	0.25% 150E	5322 116 53399
R 1161	MRS25 1% 237E	5322 116 53259
R 1162	MRS25 1% 133E	5322 116 53424
R 1163	MRS25 1% 26K1	5322 116 53261
R 1164	0.3W 25% 10K	4822 105 10455

POSNR	DESCRIPTION	ORDERING CODE
R 1166	MRS25 1% 16K2	5322 116 53589
R 1167	MRS25 1% 12K1	4822 116 52957
R 1168	MRS25 1% 133E	5322 116 53424
R 1169	0.3W 25% 100E	5322 105 20029
R 1171	MRS25 1% 26K1	5322 116 53261
R 1172	0.3W 25% 10K	4822 105 10455
R 1173	MRS25 1% 4K64	5322 116 53212
R 1174	MRS25 1% 5K62	5322 116 53495
R 1176	0.3W 25% 100E	5322 105 20029
R 1177	MRS25 1% 31E6	5322 116 54964
R 1178	MRS25 1% 12K1	4822 116 52957
R 1179	MRS25 1% 1K62	5322 116 53257
R 1181	MRS25 1% 511E	5322 116 53135
R 1182	MRS25 1% 100K	4822 116 52973
R 1183	MRS25 1% 11K	4822 116 52907
R 1184	MRS25 1% 82K5	5322 116 53581
R 1186	MRS25 1% 12K1	4822 116 52957
R 1187	MRS25 1% 1M	4822 116 52843
R 1188	MRS25 1% 100E	5322 116 53126
R 1189	MRS25 1% 422E	5322 116 53592
R 1191	0.3W 25% 100E	5322 105 20029
R 1192	MRS25 1% 10E	4822 116 52891
R 1193	MRS25 1% 422E	5322 116 53592
R 1194	MRS25 1% 100E	5322 116 53126
R 1196	MRS25 1% 100E	5322 116 53126
R 1197	MRS25 1% 100E	5322 116 53126
R 1198	MRS25 1% 1K21	4822 116 52956
R 1199	MRS25 1% 1K21	4822 116 52956
R 1201	MRS25 1% 1K	4822 116 53108
R 1202	MRS25 1% 61E9	5322 116 53645
R 1203	0.1% 1M	5322 116 51605
R 1204	VR25 10% 22M	5322 116 51785
R 1206	MRS25 1% 1K96	5322 116 53237
R 1207	MRS25 1% 100E	5322 116 53126
R 1208	MRS25 1% 825E	5322 116 53541
R 1209	MRS25 1% 1M	4822 116 52843
R 1211	MRS25 1% 100E	5322 116 53126
R 1213	MRS25 1% 1M	4822 116 52843
R 1217	0.3W 25% 22K	5322 105 20035
R 1218	MRS25 1% 100K	4822 116 52973
R 1219	MRS25 1% 1K47	5322 116 53185
R 1221	MRS25 1% 681E	4822 116 53123
R 1222	MRS25 1% 2K87	5322 116 53513
R 1223	MRS25 1% 1K33	5322 116 53512
R 1224	MRS25 1% 1K	4822 116 53108
R 1226	MRS25 1% 5K11	5322 116 53494
R 1227	MRS25 1% 1K33	5322 116 53512
R 1228	MRS25 1% 100E	5322 116 53126
R 1229	MRS25 1% 750E	5322 116 53265
R 1231	MRS25 1% 750E	5322 116 53265
R 1232	MRS25 1% 1E	4822 116 52976
R 1233	MRS25 1% 348E	5322 116 53591
R 1234	MRS25 1% 100E	5322 116 53126
R 1236	MRS25 1% 162E	5322 116 53523
R 1237	MRS25 1% 2K61	5322 116 53327
R 1238	MRS25 1% 100E	5322 116 53126
R 1239	MRS25 1% 7K5	4822 116 53028
R 1401	MRS25 1% 5E11	4822 116 52999
R 1402	MRS25 1% 5E11	4822 116 52999
R 1403	MRS25 1% 5E11	4822 116 52999
R 1404	MRS25 1% 5E11	4822 116 52999
R 1421	MRS25 1% 5E11	4822 116 52999
R 1422	MRS25 1% 5E11	4822 116 52999
R 1423	MRS25 1% 5E11	4822 116 52999
R 1424	MRS25 1% 5E11	4822 116 52999
R 1441	MRS25 1% 100E	5322 116 53126
R 1442	MRS25 1% 5E11	4822 116 52999
R 1443	MRS25 1% 5E11	4822 116 52999
R 2001	MRS25 1% 10E	4822 116 52891
R 2002	MRS25 1% 10E	4822 116 52891
R 2003	MRS25 1% 51E1	5322 116 53213
R 2004	MRS25 1% 51E1	5322 116 53213
R 2101	MRS25 1% 10E	4822 116 52891
R 2102	MRS25 1% 10E	4822 116 52891
R 2103	MRS25 1% 51E1	5322 116 53213
R 2104	MRS25 1% 51E1	5322 116 53213
R 2201	MRS25 1% 75K	5322 116 53266
R 2202	MRS25 1% 12K1	4822 116 52957
R 2203	MRS25 1% 215K	5322 116 53425
R 2204	MRS25 1% 10K	4822 116 53022
R 2205	MRS25 1% 2K15	5322 116 53239
R 2206	MRS25 1% 75K	5322 116 53266
R 2207	MRS25 1% 12K1	4822 116 52957
R 2208	MRS25 1% 215K	5322 116 53425
R 2209	MRS25 1% 10K	4822 116 53022
R 2210	MRS25 1% 2K15	5322 116 53239
R 2211	MRS25 1% 5K62	5322 116 53495
R 2212	0.3W 25% 10K	4822 105 10455
R 2213	MRS25 1% 23K7	5322 116 53537
R 2214	MRS25 1% 10K	4822 116 53022
R 2215	MRS25 1% 2K15	5322 116 53239
R 2216	MRS25 1% 5K62	5322 116 53495
R 2217	MRS25 1% 100K	4822 116 52973
R 2218	MRS25 1% 4K64	5322 116 53212
R 2219	MRS25 1% 316K	4822 116 53058

POSNR	DESCRIPTION	ORDERING CODE
R 2221	MRS25 1% 19K6	5322 116 53258
R 2222	MRS25 1% 1K96	5322 116 53237
R 2225	MRS25 1% 23K7	5322 116 53537
R 2230	MRS25 1% 316E	5322 116 53514
R 2231	MRS25 1% 261E	5322 116 53549
R 2232	MRS25 1% 383E	5322 116 53332
R 2234	MRS25 1% 42E2	5322 116 53515
R 2236	MRS25 1% 681E	4822 116 53123
R 2237	MRS25 1% 383E	5322 116 53332
R 2239	MRS25 1% 348E	5322 116 53591
R 2241	MRS25 1% 1K	4822 116 53108
R 2242	MRS25 1% 383E	5322 116 53332
R 2243	MRS25 1% 681E	4822 116 53123
R 2244	MRS25 1% 42E2	5322 116 53515
R 2246	MRS25 1% 261E	5322 116 53549
R 2247	MRS25 1% 383E	5322 116 53332
R 2251	MRS25 1% 75E	5322 116 53339
R 2252	MRS25 1% 750E	5322 116 53265
R 2253	MRS25 1% 750E	5322 116 53265
R 2254	MRS25 1% 75E	5322 116 53339
R 2255	MRS25 1% 287E	5322 116 53221
R 2301	MRS25 1% 19K6	5322 116 53258
R 2302	MRS25 1% 19K6	5322 116 53258
R 2303	MRS25 1% 5K62	5322 116 53495
R 2304	MRS25 1% 5K62	5322 116 53495
R 2311	MRS25 1% 2K87	5322 116 53513
R 2317	MRS25 1% 681E	4822 116 53123
R 2318	MRS25 1% 681E	4822 116 53123
R 2319	MRS25 1% 5E11	4822 116 52999
R 2324	MRS25 1% 5K62	5322 116 53495
R 2325	MRS25 1% 5K62	5322 116 53495
R 2326	MRS25 1% 2K87	5322 116 53513
R 2327	MRS25 1% 3K83	4822 116 53079
R 2328	MRS25 1% 2K87	5322 116 53513
R 2329	MRS25 1% 825E	5322 116 53541
R 2330	0.3W 25% 10K	4822 105 10455
R 2333	MRS25 1% 5K62	5322 116 53495
R 2334	MRS25 1% 5K62	5322 116 53495
R 2335	MRS25 1% 10K	4822 116 53022
R 2336	MRS25 1% 31E6	5322 116 54964
R 2337	MRS25 1% 162E	5322 116 53523
R 2338	MRS25 1% 2K61	5322 116 53327
R 2339	MRS25 1% 237E	5322 116 53259
R 2341	MRS25 1% 31E6	5322 116 54964
R 2342	MRS25 1% 162E	5322 116 53523
R 2344	MRS25 1% 511E	5322 116 53135
R 2345	MRS25 1% 100E	5322 116 53126
R 2346	MRS25 1% 681E	4822 116 53123
R 2348	MRS25 1% 8K25	5322 116 53267
R 2350	MRS25 1% 4K22	5322 116 53246
R 2351	MRS25 1% 562E	5322 116 53214
R 2352	MRS25 1% 825E	5322 116 53541
R 2357	MRS25 1% 681E	4822 116 53123
R 2358	MRS25 1% 511E	5322 116 53135
R 2360	MRS25 1% 100E	5322 116 53126
R 2361	MRS25 1% 4K22	5322 116 53246
R 2365	MRS25 1% 23K7	5322 116 53537
R 2366	MRS25 1% 10K	4822 116 53022
R 2367	MRS25 1% 16K2	5322 116 53589
R 2369	MRS25 1% 68K1	5322 116 53338
R 2371	MRS25 1% 422E	5322 116 53592
R 2372	MRS25 1% 511E	5322 116 53135
R 2373	MRS25 1% 75K	5322 116 53266
R 2374	MRS25 1% 511E	5322 116 53135
R 2375	MRS25 1% 23K7	5322 116 53537
R 2376	VR25 10% 22M	5322 116 51785
R 2377	VR25 10% 22M	5322 116 51785
R 2378	VR25 10% 22M	5322 116 51785
R 2379	VR25 10% 22M	5322 116 51785
R 2380	MRS25 1% 750E	5322 116 53265
R 2381	MRS25 1% 2K61	5322 116 53327
R 2382	MRS25 1% 2K61	5322 116 53327
R 2383	MRS25 1% 1K	4822 116 53108
R 2384	MRS25 1% 750E	5322 116 53265
R 2386	MRS25 1% 1K	4822 116 53108
R 2387	MRS25 1% 750E	5322 116 53265
R 2388	MRS25 1% 1K	4822 116 53108
R 2389	MRS25 1% 1K	4822 116 53108
R 2391	MRS25 1% 42E2	5322 116 53515
R 2393	MRS25 1% 3K48	4822 116 53315
R 2394	MRS25 1% 100E	5322 116 53126
R 2395	0.3W 25% 220E	5322 105 20031
R 2396	MRS25 1% 3K48	4822 116 53315
R 2397	MRS25 1% 42E2	5322 116 53515
R 2398	MRS25 1% 237E	5322 116 53259
R 2403	MRS25 1% 42E2	5322 116 53515
R 2404	MRS25 1% 619E	5322 116 53337
R 2406	MRS25 1% 1K62	5322 116 53257
R 2407	0.3W 25% 220E	5322 105 20031
R 2408	MRS25 1% 1K33	5322 116 53512
R 2409	MRS25 1% 1K62	5322 116 53257
R 2410	0.3W 25% 1K	5322 105 20032
R 2411	MRS25 1% 42E2	5322 116 53515
R 2412	MRS25 1% 619E	5322 116 53337
R 2416	MRS25 1% 1K	4822 116 53108

POSNR	DESCRIPTION	ORDERING CODE
R 2418	MRS25 1% 4K22	5322 116 53246
R 2419	MRS25 1% 1K1	5322 116 53473
R 2420	MRS25 1% 825E	5322 116 53541
R 2421	MRS25 1% 4K22	5322 116 53246
R 2422	MRS25 1% 1K	4822 116 53108
R 2430	MRS25 1% 100K	4822 116 52973
R 2431	MRS25 1% 100K	4822 116 52973
R 2432	MRS25 1% 100K	4822 116 52973
R 2433	MRS25 1% 100K	4822 116 52973
R 2434	MRS25 1% 10K	4822 116 53022
R 2435	MRS25 1% 10K	4822 116 53022
R 2501	MRS25 1% 19K6	5322 116 53258
R 2502	MRS25 1% 19K6	5322 116 53258
R 2503	MRS25 1% 5K62	5322 116 53495
R 2504	MRS25 1% 2K87	5322 116 53513
R 2522	MRS25 1% 5K62	5322 116 53495
R 2523	MRS25 1% 5K62	5322 116 53495
R 2527	MRS25 1% 100K	4822 116 52973
R 2528	MRS25 1% 12K1	4822 116 52957
R 2529	MRS25 1% 316K	4822 116 53058
R 2541	MRS25 1% 162E	5322 116 53523
R 2542	MRS25 1% 1K62	5322 116 53257
R 2543	MRS25 1% 681E	4822 116 53123
R 2544	MRS25 1% 121E	4822 116 52955
R 2547	MRS25 1% 511E	5322 116 53135
R 2548	MRS25 1% 1K21	4822 116 52956
R 2549	MRS25 1% 1K33	5322 116 53512
R 2551	MRS25 1% 162E	5322 116 53523
R 2552	MRS25 1% 681E	4822 116 53123
R 2553	MRS25 1% 1K62	5322 116 53257
R 2554	MRS25 1% 42E2	5322 116 53515
R 2555	MRS25 1% 8K25	5322 116 53267
R 2556	MRS25 1% 42E2	5322 116 53515
R 2557	MRS25 1% 4K22	5322 116 53246
R 2558	MRS25 1% 4K22	5322 116 53246
R 2559	MRS25 1% 100E	5322 116 53126
R 2601	MRS25 1% 3K48	4822 116 53315
R 2602	MRS25 1% 5E11	4822 116 52999
R 2603	MRS25 1% 5K11	5322 116 53494
R 2604	MRS25 1% 5K11	5322 116 53494
R 2605	MRS25 1% 12K1	4822 116 52957
R 2606	MRS25 1% 1E	4822 116 52976
R 2610	MRS25 1% 10K	4822 116 53022
R 2611	MRS25 1% 1K	4822 116 53108
R 2621	MRS25 1% 422E	5322 116 53592
R 2622	MRS25 1% 681E	4822 116 53123
R 2623	MRS25 1% 1K1	5322 116 53473
R 2624	MRS25 1% 3K48	4822 116 53315
R 2625	MRS25 1% 681E	4822 116 53123
R 2626	MRS25 1% 6K81	5322 116 53252
R 2627	MRS25 1% 287E	5322 116 53221
R 2628	MRS25 1% 2K37	5322 116 53536
R 2629	MRS25 1% 10K	4822 116 53022
R 2631	MRS25 1% 10K	4822 116 53022
R 2632	MRS25 1% 383E	5322 116 53332
R 2635	MRS25 1% 10K	4822 116 53022
R 2701	MRS25 1% 1E	4822 116 52976
R 2702	MRS25 1% 10E	4822 116 52891
R 2703	MRS25 1% 5E11	4822 116 52999
R 2704	MRS25 1% 5E11	4822 116 52999
R 2712	MRS25 1% 5E11	4822 116 52999
R 2713	MRS25 1% 5E11	4822 116 52999
R 2714	MRS25 1% 5E11	4822 116 52999
R 2721	MRS25 1% 5E11	4822 116 52999
R 2722	MRS25 1% 5E11	4822 116 52999
R 2723	MRS25 1% 5E11	4822 116 52999
R 2724	MRS25 1% 5E11	4822 116 52999
R 2731	MRS25 1% 5E11	4822 116 52999
R 2732	MRS25 1% 5E11	4822 116 52999
R 2733	MRS25 1% 5E11	4822 116 52999
R 2740	MRS25 1% 5E11	4822 116 52999
R 2741	MRS25 1% 31E6	5322 116 54964
R 2742	MRS25 1% 5E11	4822 116 52999
R 3001	MRS25 1% 147E	5322 116 53569
R 3002	MRS25 1% 316E	5322 116 53514
R 3003	MRS25 1% 1K47	5322 116 53185
R 3004	MRS25 1% 422E	5322 116 53592
R 3006	MRS25 1% 2K37	5322 116 53536
R 3007	0.3W 25% 2K2	5322 105 20033
R 3008	MRS25 1% 121E	4822 116 52955
R 3009	MRS25 1% 3K83	4822 116 53079
R 3011	MRS25 1% 121E	4822 116 52955
R 3012	MRS25 1% 316E	5322 116 53514
R 3013	0.3W 25% 10K	4822 105 10455
R 3014	MRS25 1% 2K87	5322 116 53513
R 3015	MRS25 1% 316E	5322 116 53514
R 3016	MRS25 1% 2K37	5322 116 53536
R 3017	0.3W 25% 22K	5322 105 20035
R 3018	MRS25 1% 8K25	5322 116 53267
R 3020	MRS25 1% 10E	4822 116 52891
R 3021	MRS25 1% 464E	5322 116 53232
R 3022	MRS25 1% 750E	5322 116 53265
R 3023	MRS25 1% 348E	5322 116 53591
R 3024	MRS25 1% 750E	5322 116 53265
R 3025	MRS25 1% 10E	4822 116 52891
R 3026	MRS25 1% 464E	5322 116 53232
R 3027	MRS25 1% 42E2	5322 116 53515
R 3028	MRS25 1% 42E2	5322 116 53515
R 3029	MRS25 1% 3K16	4822 116 53021
R 3031	MRS25 1% 402E	5322 116 53639
R 3032	MRS25 1% 31E6	5322 116 54964
R 3033	MRS25 1% 100E	5322 116 53126
R 3034	MRS25 1% 162E	5322 116 53523
R 3036	0.3W 25% 100E	5322 105 20029
R 3037	MRS25 1% 100E	5322 116 53126
R 3038	0.3W 25% 470E	5322 105 20028
R 3039	MRS25 1% 42E2	5322 116 53515
R 3041	MRS25 1% 316E	5322 116 53514
R 3042	MRS25 1% 110E	4822 116 52906
R 3043	MRS25 1% 110E	4822 116 52906
R 3044	MRS25 1% 110E	4822 116 52906
R 3046	MRS25 1% 110E	4822 116 52906
R 3047	MRS25 1% 42E2	5322 116 53515
R 3048	MRS25 1% 42E2	5322 116 53515
R 3049	MRS25 1% 100K	4822 116 52973
R 3050	MRS25 1% 42E2	5322 116 53515
R 3051	MRS25 1% 100K	4822 116 52973
R 3052	MRS25 1% 42E2	5322 116 53515
R 3060	MRS25 1% 110E	4822 116 52906
R 3061	MRS25 1% 110E	4822 116 52906
R 3062	MRS25 1% 110E	4822 116 52906
R 3063	MRS25 1% 110E	4822 116 52906
R 3064	MRS25 1% 110E	4822 116 52906
R 3066	MRS25 1% 110E	4822 116 52906
R 3067	MRS25 1% 110E	4822 116 52906
R 3068	MRS25 1% 110E	4822 116 52906
R 3100	MRS25 1% 42E2	5322 116 53515
R 3101	MRS25 1% 5K62	5322 116 53495
R 3102	MRS25 1% 562E	5322 116 53214
R 3103	MRS25 1% 1K21	4822 116 52956
R 3104	MRS25 1% 6K81	5322 116 53252
R 3106	MRS25 1% 42E2	5322 116 53515
R 3107	MRS25 1% 2K87	5322 116 53513
R 3108	MRS25 1% 825E	5322 116 53541
R 3109	MRS25 1% 6K19	5322 116 53263
R 3110	MRS25 1% 42E2	5322 116 53515
R 3111	MRS25 1% 42E2	5322 116 53515
R 3112	MRS25 1% 7K5	4822 116 53028
R 3113	MRS25 1% 1K21	4822 116 52956
R 3114	MRS25 1% 5K62	5322 116 53495
R 3115	MRS25 1% 42E2	5322 116 53515
R 3116	MRS25 1% 562E	5322 116 53214
R 3117	MRS25 1% 4K64	5322 116 53212
R 3118	0.3W 25% 1K	5322 105 20032
R 3119	MRS25 1% 4K64	5322 116 53212
R 3120	MRS25 1% 42E2	5322 116 53515
R 3121	MRS25 1% 46K4	5322 116 53314
R 3122	MRS25 1% 6K81	5322 116 53252
R 3124	MRS25 1% 619E	5322 116 53337
R 3125	MRS25 1% 42E2	5322 116 53515
R 3126	MRS25 1% 14K7	4822 116 53531
R 3127	MRS25 1% 1K33	5322 116 53512
R 3128	MRS25 1% 825E	5322 116 53541
R 3129	MRS25 1% 1K1	5322 116 53473
R 3130	MRS25 1% 42E2	5322 116 53515
R 3131	MRS25 1% 1K33	5322 116 53512
R 3132	MRS25 1% 825E	5322 116 53541
R 3133	MRS25 1% 6K19	5322 116 53263
R 3134	MRS25 1% 14K7	4822 116 53531
R 3136	MRS25 1% 1K	4822 116 53108
R 3137	MRS25 1% 46K4	5322 116 53314
R 3138	MRS25 1% 6K81	5322 116 53252
R 3139	MRS25 1% 619E	5322 116 53337
R 3141	MRS25 1% 316E	5322 116 53514
R 3142	MRS25 1% 316E	5322 116 53514
R 3143	MRS25 1% 10E	4822 116 52891
R 3144	MRS25 1% 10E	4822 116 52891
R 3147	0.5W 10% 3K3	5322 116 30234
R 3148	MRS25 1% 9K09	5322 116 53253
R 3200	MRS25 1% 6K81	5322 116 53252
R 3201	MRS25 1% 1K21	4822 116 52956
R 3202	MRS25 1% 100E	5322 116 53126
R 3203	MRS25 1% 16K2	5322 116 53589
R 3204	MRS25 1% 562E	5322 116 53214
R 3205	MRS25 1% 4K64	5322 116 53212
R 3206	MRS25 1% 4K64	5322 116 53212
R 3207	MRS25 1% 82K5	5322 116 53581
R 3208	MRS25 1% 7K5	4822 116 53028
R 3209	MRS25 1% 1K	4822 116 53108
R 3210	MRS25 1% 42E2	5322 116 53515
R 3211	MRS25 1% 10K	4822 116 53022
R 3212	MRS25 1% 1K47	5322 116 53185
R 3213	MRS25 1% 23K7	5322 116 53537
R 3214	MRS25 1% 31K6	5322 116 53262
R 3215	MRS25 1% 4K64	5322 116 53212

POSNR	DESCRIPTION	ORDERING CODE
R 3216	MRS25 1% 178K	5322 116 53555
R 3217	MRS25 1% 511E	5322 116 53135
R 3218	MRS25 1% 61K9	5322 116 53233
R 3219	MRS25 1% 1M	4822 116 52843
R 3221	MRS25 1% 100E	5322 116 53126
R 3222	MRS25 1% 100K	4822 116 52973
R 3223	MRS25 1% 38K3	4822 116 53526
R 3224	MRS25 1% 2K37	5322 116 53536
R 3226	MRS25 1% 100E	5322 116 53126
R 3250	MRS25 1% 2K37	5322 116 53536
R 3251	MRS25 1% 1M	4822 116 52843
R 3253	MRS25 1% 75K	5322 116 53266
R 3254	MRS25 1% 1K	4822 116 53108
R 3256	MRS25 1% 178K	5322 116 53555
R 3257	MRS25 1% 825K	5322 116 53341
R 3258	VR25 5% 3M3	4822 110 72201
R 3259	VR25 5% 3M3	4822 110 72201
R 3261	VR25 5% 3M3	4822 110 72201
R 3262	VR25 5% 7M5	5322 116 60131
R 3263	VR25 5% 3M3	4822 110 72201
R 3267	25% 47K	5322 105 20037
R 3268	MRS25 1% 681K	5322 116 53593
R 3269	MRS25 1% 15K4	5322 116 53234
R 3270	MRS25 1% 23K7	5322 116 53537
R 3271	MRS25 1% 14K7	4822 116 53531
R 3273	MRS25 1% 215K	5322 116 53425
R 3301	MRS25 1% 10E	4822 116 52891
R 3302	MRS25 1% 1E	4822 116 52976
R 3303	MRS25 1% 5E11	4822 116 52999
R 3304	MRS25 1% 5E11	4822 116 52999
R 3306	MRS25 1% 2K87	5322 116 53513
R 3308	MRS25 1% 10E	4822 116 52891
R 3309	MRS25 1% 5E11	4822 116 52999
R 3311	MRS25 1% 5E11	4822 116 52999
R 3312	MRS25 1% 5E11	4822 116 52999
R 3313	MRS25 1% 10E	4822 116 52891
R 4000	MRS25 1% 51E1	5322 116 53213
R 4001	MRS25 1% 619E	5322 116 53337
R 4002	MRS25 1% 511E	5322 116 53135
R 4003	MRS25 1% 511E	5322 116 53135
R 4004	MRS25 1% 6K19	5322 116 53263
R 4005	MRS25 1% 100E	5322 116 53126
R 4006	MRS25 1% 51E1	5322 116 53213
R 4007	MRS25 1% 1K47	5322 116 53185
R 4008	MRS25 1% 100E	5322 116 53126
R 4009	0.3W 25% 1K	5322 105 20032
R 4010	MRS25 1% 511E	5322 116 53135
R 4011	MRS25 1% 5K11	5322 116 53494
R 4012	MRS25 1% 1K78	5322 116 53208
R 4013	MRS25 1% 1M	4822 116 52843
R 4014	MRS25 1% 5K11	5322 116 53494
R 4015	MRS25 1% 1K	4822 116 53108
R 4016	MRS25 1% 5K11	5322 116 53494
R 4017	MRS25 1% 2K87	5322 116 53513
R 4018	MRS25 1% 5K11	5322 116 53494
R 4019	MRS25 1% 681K	5322 116 53593
R 4020	MRS25 1% 1K62	5322 116 53257
R 4021	MRS25 1% 10K	4822 116 53022
R 4022	MRS25 1% 4K22	5322 116 53246
R 4023	MRS25 1% 12K1	4822 116 52957
R 4024	MRS25 1% 1K	4822 116 53108
R 4025	MRS25 1% 1K	4822 116 53108
R 4026	MRS25 1% 5K11	5322 116 53494
R 4030	MRS25 1% 51E1	5322 116 53213
R 4031	MRS25 1% 619E	5322 116 53337
R 4032	MRS25 1% 511E	5322 116 53135
R 4033	MRS25 1% 511E	5322 116 53135
R 4034	MRS25 1% 1K78	5322 116 53208
R 4035	MRS25 1% 100E	5322 116 53126
R 4036	MRS25 1% 51E1	5322 116 53213
R 4037	MRS25 1% 1K78	5322 116 53208
R 4038	MRS25 1% 100E	5322 116 53126
R 4040	MRS25 1% 511E	5322 116 53135
R 4042	MRS25 1% 1K78	5322 116 53208
R 4043	MRS25 1% 51K1	4822 116 53121
R 4044	MRS25 1% 51K1	4822 116 53121
R 4045	MRS25 1% 681K	5322 116 53593
R 4046	MRS25 1% 10K	4822 116 53022
R 4047	MRS25 1% 4K22	5322 116 53246
R 4048	MRS25 1% 2K61	5322 116 53327
R 4051	MRS25 1% 10K	4822 116 53022
R 4052	MRS25 1% 10K	4822 116 53022
R 4101	MRS25 1% 100K	4822 116 52973
R 4102	MRS25 1% 4K64	5322 116 53212
R 4103	MRS25 1% 11K	4822 116 52907
R 4104	MRS25 1% 46K4	5322 116 53314
R 4106	MRS25 1% 422E	5322 116 53592
R 4107	0.3W 25% 10K	4822 105 10455
R 4108	0.3W 25% 10K	4822 105 10455
R 4109	MRS25 1% 5K11	5322 116 53494
R 4111	MRS25 1% 12K1	4822 116 52957

POSNR	DESCRIPTION	ORDERING CODE
R 4117	MRS25 1% 3K16	4822 116 53021
R 4118	0.25% 50E	5322 116 53405
R 4119	0.25% 50E	5322 116 53405
R 4120	MRS25 1% 1K	4822 116 53108
R 4121	0.25% 150E	5322 116 53399
R 4122	0.25% 250E	5322 116 53406
R 4123	0.25% 500E	5322 116 53408
R 4124	0.25% 1K5	5322 116 53401
R 4125	MRS25 1% 100E	5322 116 53126
R 4126	MRS25 1% 9K09	5322 116 53253
R 4127	MRS25 1% 1K62	5322 116 53257
R 4128	MRS25 1% 5K11	5322 116 53494
R 4129	MRS25 1% 1M	4822 116 52843
R 4130	MRS25 1% 1K	4822 116 53108
R 4131	MRS25 1% 5K11	5322 116 53494
R 4132	MRS25 1% 5K11	5322 116 53494
R 4133	MRS25 1% 1K	4822 116 53108
R 4134	MRS25 1% 10K	4822 116 53022
R 4135	MRS25 1% 1K	4822 116 53108
R 4136	MRS25 1% 10K	4822 116 53022
R 4137	MRS25 1% 14K7	4822 116 53531
R 4138	MRS25 1% 5E11	4822 116 52999
R 4139	MRS25 1% 10K	4822 116 53022
R 4140	MRS25 1% 10K	4822 116 53022
R 4141	MRS25 1% 14K7	4822 116 53531
R 4142	MRS25 1% 100E	5322 116 53126
R 4143	0.1% 20K	5322 116 52697
R 4144	0.1% 202E	5322 116 53413
R 4145	MRS25 1% 1K	4822 116 53108
R 4146	MRS25 1% 10K	4822 116 53022
R 4147	MRS25 1% 511E	5322 116 53135
R 4148	MRS25 1% 21K5	5322 116 53241
R 4149	MRS25 1% 31E6	5322 116 54964
R 4150	MRS25 1% 9E09	5322 116 53516
R 4151	MRS25 1% 2K61	5322 116 53327
R 4152	MRS25 1% 162E	5322 116 53523
R 4153	MRS25 1% 1K1	5322 116 53473
R 4154	MRS25 1% 1K78	5322 116 53208
R 4155	MRS25 1% 2K15	5322 116 53239
R 4156	MRS25 1% 1M	4822 116 52843
R 4157	MRS25 1% 1E	4822 116 52976
R 4158	MRS25 1% 1M	4822 116 52843
R 4159	MRS25 1% 2K15	5322 116 53239
R 4160	MRS25 1% 100E	5322 116 53126
R 4161	MRS25 1% 10K	4822 116 53022
R 4162	MRS25 1% 100E	5322 116 53126
R 4163	MRS25 1% 5E11	4822 116 52999
R 4207	0.3W 25% 10K	4822 105 10455
R 4208	0.3W 25% 10K	4822 105 10455
R 4209	MRS25 1% 5K11	5322 116 53494
R 4211	MRS25 1% 12K1	4822 116 52957
R 4217	MRS25 1% 3K16	4822 116 53021
R 4218	0.25% 50E	5322 116 53405
R 4219	0.25% 50E	5322 116 53405
R 4221	0.25% 150E	5322 116 53399
R 4222	0.25% 250E	5322 116 53406
R 4223	0.25% 500E	5322 116 53408
R 4224	0.25% 1K5	5322 116 53401
R 4239	MRS25 1% 10K	4822 116 53022
R 4240	MRS25 1% 10K	4822 116 53022
R 4242	MRS25 1% 100E	5322 116 53126
R 4243	0.1% 20K	5322 116 52697
R 4244	0.1% 202E	5322 116 53413
R 4245	MRS25 1% 1K	4822 116 53108
R 4246	MRS25 1% 10K	4822 116 53022
R 4247	MRS25 1% 511E	5322 116 53135
R 4248	MRS25 1% 21K5	5322 116 53241
R 4249	MRS25 1% 31E6	5322 116 54964
R 4250	MRS25 1% 9E09	5322 116 53516
R 4251	MRS25 1% 2K61	5322 116 53327
R 4252	MRS25 1% 162E	5322 116 53523
R 4253	MRS25 1% 5K11	5322 116 53494
R 4254	MRS25 1% 6K81	5322 116 53252
R 4258	MRS25 1% 1M	4822 116 52843
R 4259	MRS25 1% 2K15	5322 116 53239
R 4260	MRS25 1% 100E	5322 116 53126
R 4261	MRS25 1% 10K	4822 116 53022
R 4262	MRS25 1% 100E	5322 116 53126
R 4301	MRS25 1% 51K1	4822 116 53121
R 4302	MRS25 1% 51K1	4822 116 53121
R 4303	MRS25 1% 6K81	5322 116 53252
R 4304	MRS25 1% 5K11	5322 116 53494
R 4305	MRS25 1% 51K1	4822 116 53121
R 4306	MRS25 1% 681E	4822 116 53123
R 4307	MRS25 1% 5K11	5322 116 53494
R 4308	MRS25 1% 10K	4822 116 53022
R 4309	MRS25 1% 8K25	5322 116 53267
R 4310	MRS25 1% 100E	5322 116 53126
R 4311	MRS25 1% 10K	4822 116 53022
R 4312	MRS25 1% 9K09	5322 116 53253

POSNR	DESCRIPTION	ORDERING CODE
R 4314	MRS25 1% 8K25	5322 116 53267
R 4330	MRS25 1% 5K11	5322 116 53494
R 4331	MRS25 1% 21K5	5322 116 53241
R 4332	MRS25 1% 4K22	5322 116 53246
R 4334	MRS25 1% 2K15	5322 116 53239
R 4401	MRS25 1% 2K61	5322 116 53327
R 4402	MRS25 1% 82E5	5322 116 53538
R 4403	MRS25 1% 681E	4822 116 53123
R 4404	MRS25 1% 2K37	5322 116 53536
R 4406	0.3W 25% 22K	5322 105 20035
R 4407	MRS25 1% 215K	5322 116 53425
R 4408	0.3W 25% 22K	5322 105 20035
R 4409	MRS25 1% 10K	4822 116 53022
R 4411	MRS25 1% 2K37	5322 116 53536
R 4412	MRS25 1% 100E	5322 116 53126
R 4413	MRS25 1% 6K81	5322 116 53252
R 4414	MRS25 1% 4K64	5322 116 53212
R 4417	MRS25 1% 1K	4822 116 53108
R 4419	MRS25 1% 511E	5322 116 53135
R 4420	MRS25 1% 1K21	4822 116 52956
R 4421	MRS25 1% 10K	4822 116 53022
R 4422	MRS25 1% 2K87	5322 116 53513
R 4423	MRS25 1% 9K09	5322 116 53253
R 4427	MRS25 1% 1K96	5322 116 53237
R 4428	MRS25 1% 100E	5322 116 53126
R 4501	MRS25 1% 13K3	5322 116 53489
R 4502	MRS25 1% 4K22	5322 116 53246
R 4503	MRS25 1% 6K81	5322 116 53252
R 4504	MRS25 1% 13K3	5322 116 53489
R 4505	MRS25 1% 511E	5322 116 53135
R 4506	MRS25 1% 2K15	5322 116 53239
R 4507	MRS25 1% 750E	5322 116 53265
R 4508	MRS25 1% 11K	4822 116 52907
R 4509	MRS25 1% 2K15	5322 116 53239
R 4513	MRS25 1% 1K47	5322 116 53185
R 4521	MRS25 1% 16K2	5322 116 53589
R 4522	MRS25 1% 23K7	5322 116 53537
R 4523	MRS25 1% 16K2	5322 116 53589
R 4524	MRS25 1% 14K7	4822 116 53531
R 4526	MRS25 1% 2K37	5322 116 53536
R 4527	MRS25 1% 19K6	5322 116 53258
R 4528	MRS25 1% 5K62	5322 116 53495
R 4529	MRS25 1% 21K5	5322 116 53241
R 4531	MRS25 1% 10K	4822 116 53022
R 4532	MRS25 1% 10K	4822 116 53022
R 4533	MRS25 1% 3K48	4822 116 53315
R 4601	MRS25 1% 2K37	5322 116 53536
R 4602	MRS25 1% 26K1	5322 116 53261
R 4603	MRS25 1% 23K7	5322 116 53537
R 4604	MRS25 1% 100K	4822 116 52973
R 4606	MRS25 1% 909E	4822 116 53533
R 4607	MRS25 1% 100E	5322 116 53126
R 4608	MRS25 1% 1K	4822 116 53108
R 4609	MRS25 1% 42E2	5322 116 53515
R 4611	MRS25 1% 10K	4822 116 53022
R 4612	MRS25 1% 7K5	4822 116 53028
R 4613	MRS25 1% 7K5	4822 116 53028
R 4614	MRS25 1% 8K25	5322 116 53267
R 4616	0.3W 25% 1K	5322 105 20032
R 4617	MRS25 1% 6K81	5322 116 53252
R 4618	MRS25 1% 11K	4822 116 52907
R 4619	MRS25 1% 51K1	4822 116 53121
R 4620	MRS25 1% 10K	4822 116 53022
R 4621	MRS25 1% 909E	4822 116 53533
R 4622	MRS25 1% 100E	5322 116 53126
R 4625	MRS25 1% 100E	5322 116 53126
R 4626	MRS25 1% 100E	5322 116 53126
R 4627	MRS25 1% 10K	4822 116 53022
R 4628	MRS25 1% 100E	5322 116 53126
R 4629	MRS25 1% 8K25	5322 116 53267
R 4631	MRS25 1% 1K	4822 116 53108
R 4632	MRS25 1% 100E	5322 116 53126
R 4633	MRS25 1% 1K	4822 116 53108
R 4634	MRS25 1% 1K	4822 116 53108
R 4636	MRS25 1% 1M	4822 116 52843
R 4639	MRS25 1% 383E	5322 116 53332
R 4701	MRS25 1% 42E2	5322 116 53515
R 4703	MRS25 1% 562E	5322 116 53214
R 4705	MRS25 1% 1K	4822 116 53108
R 4706	MRS25 1% 100E	5322 116 53126
R 4707	MRS25 1% 511E	5322 116 53135
R 4708	MRS25 1% 2K87	5322 116 53513
R 4709	MRS25 1% 681E	4822 116 53123
R 4711	MRS25 1% 6K19	5322 116 53263
R 4712	MRS25 1% 511E	5322 116 53135
R 4713	MRS25 1% 1M	4822 116 52843
R 4714	MRS25 1% 1M	4822 116 52843
R 4716	MRS25 1% 6K81	5322 116 53252
R 4717	MRS25 1% 8K25	5322 116 53267
R 4718	MRS25 1% 1K	4822 116 53108

POSNR	DESCRIPTION	ORDERING CODE
R 4719	MRS25 1% 100E	5322 116 53126
R 4721	0.3W 25% 1K	5322 105 20032
R 4722	MRS25 1% 46K4	5322 116 53314
R 4723	MRS25 1% 681K	5322 116 53593
R 4724	MRS25 1% 42E2	5322 116 53515
R 4725	MRS25 1% 4K22	5322 116 53246
R 4726	MRS25 1% 100K	4822 116 52973
R 4727	MRS25 1% 6K81	5322 116 53252
R 4728	MRS25 1% 562E	5322 116 53214
R 4801	MRS25 1% 5E11	4822 116 52999
R 4804	MRS25 1% 5E11	4822 116 52999
R 4807	MRS25 1% 5E11	4822 116 52999
R 4809	MRS25 1% 5E11	4822 116 52999
R 4816	MRS25 1% 5E11	4822 116 52999
R 4818	MRS25 1% 5E11	4822 116 52999
R 4819	MRS25 1% 5E11	4822 116 52999
R 4820	MRS25 1% 5E11	4822 116 52999
R 4821	MRS25 1% 5E11	4822 116 52999
R 4822	MRS25 1% 5E11	4822 116 52999
R 4824	MRS25 1% 5E11	4822 116 52999
R 4825	MRS25 1% 5E11	4822 116 52999
R 4826	MRS25 1% 5E11	4822 116 52999
R 4828	MRS25 1% 5E11	4822 116 52999
R 4829	MRS25 1% 5E11	4822 116 52999
R 4830	MRS25 1% 5E11	4822 116 52999
R 4831	MRS25 1% 5E11	4822 116 52999
R 4833	MRS25 1% 5E11	4822 116 52999
R 4835	MRS25 1% 5E11	4822 116 52999
R 4836	MRS25 1% 5E11	4822 116 52999
R 4838	MRS25 1% 100E	5322 116 53126
R 4839	MRS25 1% 100E	5322 116 53126
R 4841	MRS25 1% 10K	4822 116 53022
R 4902	MRS25 1% 1E	4822 116 52976
R 4903	MRS25 1% 1E	4822 116 52976
R 4904	MRS25 1% 1E	4822 116 52976
R 5001	PP17 20% 10K	5322 101 30546
R 5002	PP17 20% 10K	5322 101 30547
R 5003	PP17 20% 10K	5322 101 30546
R 5004	PP17 20% 10K	5322 101 30546
R 6001	1.7A 20% 82E	4822 116 30069
R 6002	MRS25 1% 383K	5322 116 53576
R 6003	MRS25 1% 383K	5322 116 53576
R 6004	MRS25 1% 316E	5322 116 53514
R 6005	MRS25 1% 464E	5322 116 53232
R 6006	MRS25 1% 10K	4822 116 53022
R 6007	MRS25 1% 10K	4822 116 53022
R 6008	MRS25 1% 316E	5322 116 53514
R 6009	0.5W 10% 1K5	4822 116 30248
R 6010	MRS25 1% 14K7	4822 116 53531
R 6011	MRS25 1% 237E	5322 116 53259
R 6012	MRS25 1% 178E	5322 116 53572
R 6013	MRS25 1% 100E	5322 116 53126
R 6014	MRS25 1% 3E16	4822 116 52993
R 6016	MRS25 1% 10K	4822 116 53022
R 6017	MRS25 1% 1E	4822 116 52976
R 6018	MRS25 1% 1E	4822 116 52976
R 6019	MRS25 1% 10K	4822 116 53022
R 6020	MRS25 1% 21E5	5322 116 53426
R 6021	MRS25 1% 10K	4822 116 53022
R 6022	MRS25 1% 10K	4822 116 53022
R 6031	MRS25 1% 383E	5322 116 53332
R 6032	0.25% 5K62	5322 116 80473
R 6033	0.25% 7K5	5322 116 80474
R 6034	MRS25 1% 6K19	5322 116 53263
R 6036	MRS25 1% 7K5	4822 116 53028
R 6037	MRS25 1% 31K6	5322 116 53262
R 6038	MRS25 1% 100E	5322 116 53126
R 6039	MRS25 1% 10E	4822 116 52891
R 6041	MRS25 1% 3K83	4822 116 53079
R 6042	MRS25 1% 3K83	4822 116 53079
R 6043	MRS25 1% 100K	4822 116 52973
R 6044	MRS25 1% 100K	4822 116 52973
R 6101	MRS25 1% 100E	5322 116 53126
R 6102	MRS25 1% 100E	5322 116 53126
R 6103	MRS25 1% 1K	4822 116 53108
R 6131	MRS25 1% 10E	4822 116 52891
R 6132	MRS25 1% 100K	4822 116 52973
R 6133	MRS25 1% 100K	4822 116 52973
R 6134	MRS25 1% 1K	4822 116 53108
R 6136	MRS25 1% 4K64	5322 116 53212
R 6137	MRS25 1% 316E	5322 116 53514
R 6138	MRS25 1% 1K	4822 116 53108
R 6139	MRS25 1% 100E	5322 116 53126
R 6201	0.25% 160K	5322 116 53412
R 6202	VR37 1% 31M6	5322 116 64103
R 6203	MRS25 1% 100K	4822 116 52973
R 6204	MRS25 1% 10K	4822 116 53022
R 6205	MRS25 1% 1K	4822 116 53108
R 6206	MRS25 1% 16K2	5322 116 53589
R 6207	MRS25 1% 51E1	5322 116 53213

POSNR	DESCRIPTION	ORDERING CODE
R 6208	MRS25 1% 464E	5322 116 53232
R 6209	MRS25 1% 4K64	5322 116 53212
R 6211	MRS25 1% 46K4	5322 116 53314
R 6212	MRS25 1% 4K64	5322 116 53212
R 6213	MRS25 1% 215E	5322 116 53325
R 6214	VR25 5% 10M	4822 110 72214
R 6216	MRS25 1% 100E	5322 116 53126
R 6217	MRS25 1% 1E	4822 116 52976
R 6300	MRS25 1% 2K61	5322 116 53327
R 6301	MRS25 1% 464E	5322 116 53232
R 6302	MRS25 1% 909E	4822 116 53533
R 6303	MRS25 1% 3K83	4822 116 53079
R 6304	MRS25 1% 6K81	5322 116 53252
R 6311	MRS25 1% 750E	5322 116 53265
R 6312	MRS25 1% 4K22	5322 116 53246
R 6313	MRS25 1% 1K1	5322 116 53473
R 6401	MRS25 1% 1K78	5322 116 53208
R 6402	MRS25 1% 178K	5322 116 53555
R 6403	MRS25 1% 215E	5322 116 53325
R 6404	MRS25 1% 6K81	5322 116 53252
R 6406	MRS25 1% 26K1	5322 116 53261
R 6407	MRS25 1% 3K48	4822 116 53315
R 6408	MTP10 20% 10K	5322 100 10113
R 6501	MRS25 1% 511E	5322 116 53135
R 6502	MRS25 1% 100K	4822 116 52973
R 6503	MRS25 1% 5K11	5322 116 53494
R 6504	MRS25 1% 19K6	5322 116 53258
R 6506	MRS25 1% 5K62	5322 116 53495
R 6507	MRS25 1% 511E	5322 116 53135
R 6508	0.25% 3K67	5322 116 53411
R 6509	0.25% 500E	5322 116 53408
R 6511	MRS25 1% 562E	5322 116 53214
R 7005	PP17 20% 10K	5322 101 30546
R 7006	PP17 20% 10K	5322 101 30546
R 7007	PP17 20% 10K	5322 101 30546
R 7008	PP17 20% 10K	5322 101 30546
R 7009	PP17 20% 10K	5322 101 30546
R 7010	PP17 20% 10K	5322 101 30546
R 7011	PP17 20% 10K	5322 101 30546
R 7012	PP17 20% 10K	5322 101 30546
R 7013	PP17 20% 10K	5322 101 30546
R 7014	PP17 20% 10K	5322 101 30546
R 7021	MRS25 1% 11K	4822 116 52907
R 7022	MRS25 1% 10K	4822 116 53022
R 7023	MRS25 1% 90K9	5322 116 53582
R 7024	MRS25 1% 1K	4822 116 53108
R 7025	MRS25 1% 1K	4822 116 53108
R 7026	MRS25 1% 4K64	5322 116 53212
R 7027	MRS25 1% 3K83	4822 116 53079
R 7028	MRS25 1% 3K83	4822 116 53079
R 7029	MRS25 1% 1K	4822 116 53108
R 7031	MRS25 1% 1K	4822 116 53108
R 7032	MRS25 1% 75K	5322 116 53266
R 7033	MRS25 1% 5K11	5322 116 53494
R 7034	MRS25 1% 162E	5322 116 53523
R 7036	0.5W 10% 2K2	4822 116 30254
R 7037	MRS25 1% 1K1	5322 116 53473
R 7038	MRS25 1% 1M	4822 116 52843
R 7041	MRS25 1% 3K83	4822 116 53079
R 7042	MRS25 1% 3K83	4822 116 53079
R 7102	MRS25 1% 100E	5322 116 53126
R 8001	MCR18 1% 10K	4822 111 90249

16.4.3 COILS

L 1001	0.22UH 10%	5322 157 53284
L 1101	0.22UH 10%	5322 157 53284
L 1401	1500UH	4822 156 21293
L 1402	1500UH	4822 156 21293
L 1403	1500UH	4822 156 21293
L 1421	1500UH	4822 156 21293
L 1422	1500UH	4822 156 21293
L 1423	1500UH	4822 156 21293
L 3001	2.2UH 10%	5322 157 53509
L 3002	2.2UH 10%	5322 157 53509
L 3003	2.7UH 10%	5322 157 53511
L 4101	2.2UH	4822 157 51757
L 6000	100UH	5322 157 52363
L 6001	100UH	5322 157 52363
L 6002	100UH	5322 157 52363
L 6003	5.6UH	4822 157 52259
L 6004	1000UH	5322 157 52718
L 6006	1000UH	5322 157 52718
L 6101	10UH	5322 157 52513
L 6102	27UH	4822 158 10551
L 6103	100UH	5322 157 52363
L 6104	100UH	5322 157 52363
L 6106	82UH	4822 158 10563
L 6107	82UH	4822 158 10563
L 6108	82UH	4822 158 10563
L 6109	82UH	4822 158 10563
L 6111	15UH	5322 157 52539
L 6201	82UH	4822 158 10563
L 6501	82UH	4822 158 10563
L 7101	15UH	5322 157 52539

16.4.4 SEMI-CONDUCTORS

POSNR	DESCRIPTION	ORDERING CODE
V 201	BAW62	4822 130 30613
V 202	BAW62	4822 130 30613
V 203	BF324 SELECT	5322 693 90465
V 204	BAW62	4822 130 30613
V 206	BF370	4822 130 42589
V 401	BC558B	4822 130 44197
V 402	BC548C	4822 130 44196
V 1000	BA483	4822 130 32656
V 1001	BF324	4822 130 41448
V 1002	BF324	4822 130 41448
V 1003	BF410C	4822 130 41482
V 1004	BA483	4822 130 32656
V 1005	BA483	4822 130 32656
V 1006	BF410C	4822 130 41482
V 1007	BA483	4822 130 32656
V 1008	BA483	4822 130 32656
V 1009	BA483	4822 130 32656
V 1010	BZX79-C8V2	4822 130 34382
V 1011	BF410C	4822 130 41482
V 1012	BA483	4822 130 32656
V 1013	BA483	4822 130 32656
V 1014	BA483	4822 130 32656
V 1016	BF410C	4822 130 41482
V 1017	BA483	4822 130 32656
V 1019	BF199	4822 130 44154
V 1021	BF199	4822 130 44154
V 1022	BF324	4822 130 41448
V 1023	BZX79-C5V6	4822 130 34173
V 1024	BF370	4822 130 42589
V 1061	BAW62	4822 130 30613
V 1062	BAW62	4822 130 30613
V 1063	BF324	4822 130 41448
V 1064	BF324	4822 130 41448
V 1100	BA483	4822 130 32656
V 1101	BF324	4822 130 41448
V 1102	BF324	4822 130 41448
V 1103	BF410C	4822 130 41482
V 1104	BA483	4822 130 32656
V 1105	BA483	4822 130 32656
V 1106	BF410C	4822 130 41482
V 1107	BA483	4822 130 32656
V 1108	BA483	4822 130 32656
V 1109	BA483	4822 130 32656
V 1110	BZX79-C8V2	4822 130 34382
V 1111	BF410C	4822 130 41482
V 1112	BA483	4822 130 32656
V 1113	BA483	4822 130 32656
V 1114	BA483	4822 130 32656
V 1116	BF410C	4822 130 41482
V 1117	BA483	4822 130 32656
V 1119	BF199	4822 130 44154
V 1121	BF199	4822 130 44154
V 1122	BF324	4822 130 41448
V 1123	BZX79-C5V6	4822 130 34173
V 1124	BF370	4822 130 42589
V 1161	BAW62	4822 130 30613
V 1162	BAW62	4822 130 30613
V 1163	BF324	4822 130 41448
V 1164	BF324	4822 130 41448
V 1200	BZV46-C1V5	5322 130 34865
V 1201	BF410C	4822 130 41482
V 1202	BA483	4822 130 32656
V 1203	BA483	4822 130 32656
V 1204	BF199	4822 130 44154
V 1205	BZX79-C8V2	4822 130 34382
V 1206	BF199	4822 130 44154
V 1207	BF324	4822 130 41448
V 1208	BZX79-C5V6	4822 130 34173
V 1209	BF199	4822 130 44154
V 1211	BF324	4822 130 41448
V 1212	BF324	4822 130 41448
V 1213	BF324	4822 130 41448
V 2001	BZV46-C2V0	4822 130 31248
V 2002	BZV46-C2V0	4822 130 31248
V 2003	BZX79-C3V0	4822 130 31881
V 2101	BZV46-C2V0	4822 130 31248
V 2102	BZV46-C2V0	4822 130 31248
V 2103	BZX79-C3V0	4822 130 31881
V 2305	BZV46-C1V5	5322 130 34865
V 2306	BZV46-C1V5	5322 130 34865
V 2308	BZX79-C4V3	4822 130 31554
V 2309	BZX79-C4V3	4822 130 31554
V 2310	BC558B	4822 130 44197
V 2311	BC558B	4822 130 44197
V 2313	BAW62	4822 130 30613
V 2314	BAW62	4822 130 30613
V 2314	BC558B	4822 130 44197
V 2316	BF324	4822 130 41448
V 2317	BC548C	4822 130 44196
V 2318	BF324	4822 130 41448
V 2319	BF324	4822 130 41448
V 2321	BF324	4822 130 41448

POSNR	DESCRIPTION	ORDERING CODE
V 2325	BAW62	4822 130 30613
V 2326	BAW62	4822 130 30613
V 2327	BC558B	4822 130 44197
V 2328	BZX79-C5V1	4822 130 34233
V 2329	BZX79-C9V1	4822 130 30862
V 2331	BC558B	4822 130 44197
V 2332	BC558B	4822 130 44197
V 2333	BC558B	4822 130 44197
V 2334	BC558B	4822 130 44197
V 2341	BF199	4822 130 44154
V 2342	BF199	4822 130 44154
V 2347	BF199	4822 130 44154
V 2349	BF199	4822 130 44154
V 2356	BC548C	4822 130 44196
V 2357	BC548C	4822 130 44196
V 2366	BAW62	4822 130 30613
V 2367	BAW62	4822 130 30613
V 2368	BAW62	4822 130 30613
V 2369	BAW62	4822 130 30613
V 2370	BC548C	4822 130 44196
V 2371	BC558B	4822 130 44197
V 2507	BAW62	4822 130 30613
V 2508	BAW62	4822 130 30613
V 2509	BC558B	4822 130 44197
V 2510	BC558B	4822 130 44197
V 2511	BC548C	4822 130 44196
V 2512	BF324	4822 130 41448
V 2513	BF324	4822 130 41448
V 2514	BF324	4822 130 41448
V 2516	BF324	4822 130 41448
V 2601	BZX79-C6V2	4822 130 34167
V 2602	BC548C	4822 130 44196
V 2611	BF199	4822 130 44154
V 2612	BF199	4822 130 44154
V 2615	BC548C	4822 130 44196
V 2616	BZV46-C1V5	5322 130 34865
V 3001	BF324	4822 130 41448
V 3002	BF324	4822 130 41448
V 3003	BC558B	4822 130 44197
V 3004	BF324	4822 130 41448
V 3006	BF324	4822 130 41448
V 3007	BC548C	4822 130 44196
V 3008	BF370	4822 130 42589
V 3009	BF370	4822 130 42589
V 3011	2N3866-01	5322 130 41799
V 3012	2N3866-01	5322 130 41799
V 3013	BZX79-C27	4822 130 34379
V 3014	BZX79-C27	4822 130 34379
V 3016	BAW62	4822 130 30613
V 3101	BF324	4822 130 41448
V 3102	BF324	4822 130 41448
V 3103	BF324	4822 130 41448
V 3104	BC558B	4822 130 44197
V 3106	BF324	4822 130 41448
V 3108	BF472	5322 130 42535
V 3109	BF370	4822 130 42589
V 3111	BF370	4822 130 42589
V 3112	2N5551	5322 130 44491
V 3113	BZX79-B5V6	4822 130 34173
V 3114	2N5551	5322 130 44491
V 3116	BF472	5322 130 42535
V 3200	BF370	4822 130 42589
V 3201	BF370	4822 130 42589
V 3202	2N5401	5322 130 42534
V 3203	2N5551	5322 130 44491
V 3204	BF423	4822 130 41646
V 3205	BZX79-B5V6	4822 130 34173
V 3206	BAW62	4822 130 30613
V 3207	BC548C	4822 130 44196
V 3208	BF423	4822 130 41646
V 3209	BAW62	4822 130 30613
V 3211	BAW62	4822 130 30613
V 3212	BZX79-C68	4822 130 30864
V 3213	BC548C	4822 130 44196
V 3214	BAW62	4822 130 30613
V 3215	BAW62	4822 130 30613
V 3216	BZX79-C9V1	4822 130 30862
V 3217	BAW62	4822 130 30613
V 3251	BF423	4822 130 41646
V 3252	BZX79-C6V2	4822 130 34167
V 3253	BF423	4822 130 41646
V 3254	BF423	4822 130 41646
V 3256	BF423	4822 130 41646
V 3257	BAV21	4822 130 30842
V 3301	BZX79-C6V2	4822 130 34167
V 4001	BF199	4822 130 44154
V 4002	BF199	4822 130 44154
V 4003	BF199	4822 130 44154
V 4004	BC548C	4822 130 44196
V 4005	BC558B	4822 130 44197
V 4006	BF763	5322 130 61148
V 4007	BAW62	4822 130 30613
V 4008	BAW62	4822 130 30613
V 4009	BC548C	4822 130 44196
V 4011	BZX79-C5V1	4822 130 34233
V 4012	BC548C	4822 130 44196
V 4013	BZX79-C3V6	5322 130 34834
V 4014	BAW62	4822 130 30613
V 4016	BC548C	4822 130 44196
V 4017	BC548C	4822 130 44196
V 4018	BC548C	4822 130 44196
V 4031	BF199	4822 130 44154
V 4032	BF199	4822 130 44154
V 4033	BF199	4822 130 44154
V 4034	BC548C	4822 130 44196
V 4036	BF763	5322 130 61148
V 4037	BAW62	4822 130 30613
V 4038	BC548C	4822 130 44196
V 4039	BC548C	4822 130 44196
V 4101	BC558B	4822 130 44197
V 4102	BAW62	4822 130 30613
V 4103	BAW62	4822 130 30613
V 4104	BC548C	4822 130 44196
V 4106	BAW62	4822 130 30613
V 4107	BC327	4822 130 40854
V 4108	BC548C	4822 130 44196
V 4109	BC558B	4822 130 44197
V 4110	BAW62	4822 130 30613
V 4111	BC558B	4822 130 44197
V 4112	BSX20	4822 130 41705
V 4113	BZV46-C1V5	5322 130 34865
V 4114	BSX20	4822 130 41705
V 4115	BZX79-C6V2	4822 130 34167
V 4116	BAW62	4822 130 30613
V 4117	BC548C	4822 130 44196
V 4118	BC548C	4822 130 44196
V 4119	BF199	4822 130 44154
V 4120	BAW62	4822 130 30613
V 4121	BC548C	4822 130 44196
V 4122	BAW62	4822 130 30613
V 4123	BAW62	4822 130 30613
V 4209	BC558B	4822 130 44197
V 4211	BC558B	4822 130 44197
V 4212	BSX20	4822 130 41705
V 4213	BAW62	4822 130 30613
V 4214	BSX20	4822 130 41705
V 4215	BZX79-C6V2	4822 130 34167
V 4216	BAW62	4822 130 30613
V 4217	BC548C	4822 130 44196
V 4218	BC548C	4822 130 44196
V 4219	BF199	4822 130 44154
V 4300	BZX79-C6V2	4822 130 34167
V 4301	BC558B	4822 130 44197
V 4302	BC548C	4822 130 44196
V 4304	BC558B	4822 130 44197
V 4305	BZX79-C9V1	4822 130 30862
V 4306	BAW62	4822 130 30613
V 4307	BC548C	4822 130 44196
V 4308	BZV46-C1V5	5322 130 34865
V 4309	BC548C	4822 130 44196
V 4321	BAW62	4822 130 30613
V 4322	BC548C	4822 130 44196
V 4323	BC548C	4822 130 44196
V 4400	BZV46-C1V5	5322 130 34865
V 4401	BF324	4822 130 41448
V 4402	BZX79-C6V2	4822 130 34167
V 4500	BAW62	4822 130 30613
V 4501	BC548C	4822 130 44196
V 4502	BC548C	4822 130 44196
V 4503	BC548C	4822 130 44196
V 4504	BC548C	4822 130 44196
V 4505	BAW62	4822 130 30613
V 4506	BC548C	4822 130 44196
V 4510	BC558B	4822 130 44197
V 4511	BC558B	4822 130 44197
V 4512	BC558B	4822 130 44197
V 4513	BC558B	4822 130 44197
V 4514	BC558B	4822 130 44197
V 4516	BAW62	4822 130 30613
V 4517	BAW62	4822 130 30613
V 4518	BAW62	4822 130 30613
V 4519	BAW62	4822 130 30613
V 4521	BAW62	4822 130 30613
V 4522	BAW62	4822 130 30613
V 4523	BC548C	4822 130 44196
V 4601	BAW62	4822 130 30613
V 4602	BAW62	4822 130 30613
V 4611	BF199	4822 130 44154
V 4612	BF199	4822 130 44154
V 4613	BAW62	4822 130 30613

POSNR	DESCRIPTION	ORDERING CODE
V 4614	BAW62	4822 130 30613
V 4616	BC548C	4822 130 44196
V 4702	BF324	4822 130 41448
V 4703	BAW62	4822 130 30613
V 4704	BAW62	4822 130 30613
V 4706	BF324	4822 130 41448
V 4707	BC558B	4822 130 44197
V 4708	BF324	4822 130 41448
V 4709	BC558B	4822 130 44197
V 4710	BC548C	4822 130 44196
V 4711	BAW62	4822 130 30613
V 4712	BF324	4822 130 41448
V 4713	BAW62	4822 130 30613
V 4801	BZV46-C1V5	5322 130 34865
V 4806	BAX12	5322 130 34605
V 4807	BAX12	5322 130 34605
V 4808	BAX12	5322 130 34605
V 4809	BAX12	5322 130 34605
V 6001	BYV96E	5322 130 34979
V 6002	BYV96E	5322 130 34979
V 6003	BYV96E	5322 130 34979
V 6004	BYV96E	5322 130 34979
V 6007	BAX12	5322 130 34605
V 6008	BAX12	5322 130 34605
V 6009	BC337	4822 130 40855
V 6011	BAX12	5322 130 34605
V 6012	BZX79-C15	4822 130 34281
V 6013	BRY39	5322 130 40482
V 6014	BUZ80	5322 130 43926
V 6016	BYV27-150	4822 130 31628
V 6017	BYV27-150	4822 130 31628
V 6018	BUW12A	5322 130 42114
V 6019	BYV26C	4822 130 32343
V 6021	BZX79-C3V0	4822 130 31881
V 6031	BZX79-C3V6	5322 130 34834
V 6101	BYV43-45	5322 130 33656
V 6102	BYV28-150	5322 130 32043
V 6103	BYV27-150	4822 130 31628
V 6104	BYV28-150	5322 130 32043
V 6106	BYV27-150	4822 130 31628
V 6107	BYV95C	4822 130 41487
V 6108	BYV27-150	4822 130 31628
V 6109	BYV95C	4822 130 41487
V 6110	BYV27-150	4822 130 31628
V 6112	BT151-500R	5322 130 24081
V 6113	BYV95C	4822 130 41487
V 6115	BYV27-150	4822 130 31628
V 6116	BYV27-150	4822 130 31628
V 6131	BAX12	5322 130 34605
V 6132	BAW62	4822 130 30613
V 6133	BZX79-C6V2	4822 130 34167
V 6134	BC337	4822 130 40855
V 6136	BF423	4822 130 41646
V 6137	BF423	4822 130 41646
V 6138	BZX79-C5V6	4822 130 34173
V 6201	BC327	4822 130 40854
V 6202	BZX79-C15	4822 130 34281
V 6203	BAV21	4822 130 30842
V 6204	BAV21	4822 130 30842
V 6206	BAV21	4822 130 30842
V 6207	BYV27-150	4822 130 31628
V 6208	BUV26A	5322 130 42722
V 6209	BY509	4822 130 41485
V 6211	BC337	4822 130 40855
V 6301	BC548C	4822 130 44196
V 6302	BC558B	4822 130 44197
V 6303	BC337	4822 130 40855
V 6304	BC327	4822 130 40854
V 6311	BC337	4822 130 40855
V 6312	BDX78	5322 130 44278
V 6401	BZV11	5322 130 34294
V 6402	BAX12	5322 130 34605
V 6403	BC337	4822 130 40855
V 7001	BAW62	4822 130 30613
V 7002	BC548C	4822 130 44196
V 7101	BAW62	4822 130 30613

16.4.5 INTEGRATED CIRCUITS

POSNR	DESCRIPTION	ORDERING CODE
D 401	PC74HCT132P	4822 209 83044
D 1001	TEA1017/N8	5322 209 70023
D 1061	OQ 0203	5322 209 70393
D 1101	TEA1017/N8	5322 209 70023
D 1161	OQ 0203	5322 209 70393
D 2002	OQ 0205	5322 209 70392
D 2102	OQ 0205	5322 209 70392
D 2201	PLIFIER	5322 209 80991
D 2202	PLIFIER	5322 209 80991
D 2203	ARRAY OQ 0127	5322 209 80992
D 2301	OQ 0205	5322 209 70392
D 2302	PLIFIER	5322 209 80991
D 2303	PLIFIER	5322 209 80991
D 2304	OQ 0128	5322 209 82925
D 2501	PLIFIER	5322 209 80991
D 2502	PLIFIER	5322 209 80991
D 2601	HEF4053BP	5322 209 10576
D 2602	TEA1017/N8	5322 209 70023
D 2603	OQ 0200	5322 209 82924
D 4001	TEA1017/N8	5322 209 70023
D 4002	TEA1017/N8	5322 209 70023
D 4101	HEF4053BP	5322 209 10576
D 4102	HEF4051BP	4822 209 10262
D 4202	HEF4051BP	4822 209 10262
D 4401	TDA1540P	4822 209 81453
D 6201	HT MULTIPLIER	5322 321 21597
D 6501	HEF4066BP	5322 209 10357
D 7001	UP 8052 AH	5322 209 11349
D 7002	HEF4053BP	5322 209 10576
D 7003	PC74HCT259P	5322 209 11115
D 7006	SN74LS244N	5322 209 86017
D 8001	PCF8577T	5322 209 70024
D 8002	PCF8577T	5322 209 70024
D 8003	PCF8577T	5322 209 70024
N 201	CA3127E	5322 130 42627
N 1001	UA714TC	5322 209 70275
N 1101	UA714TC	5322 209 70275
N 1201	LF356N	5322 209 86422
N 4101	LM324N	4822 209 80587
N 4102	UA714TC	5322 209 70275
N 4103	TL080CP	5322 209 72464
N 4202	UA714TC	5322 209 70275
N 4203	TL080CP	5322 209 72464
N 4402	CA3086	5322 209 11225
N 4601	TCA240	4822 209 80629
N 6001	LM358N	4822 209 70672
N 6002	LM358N	4822 209 70672
N 7001	LM339AN	4822 209 80631

16.4.6 CATHODE RAY TUBE

V 0001	D14-372GH	5322 131 20169
V 0001	CRT D14-372GM/123	5322 131 20171

16.4.7 MISCELLANEOUS

E 0001	T13/4 28V 80MA	5322 134 40534
E 8001	60MA MGG9012	5322 134 40849
G 7001	KYO	5322 242 71444
H 6001	CNX35	5322 130 90137
K 1001	EED-RELAIS 12V	5322 280 20125
K 1002	EED-RELAIS 12V	5322 280 20125
K 1003	EED-RELAIS 12V	5322 280 20125
K 1004	EED-RELAIS 12V	5322 280 20125
K 1006	EED-RELAIS 12V	5322 280 20125
K 1007	EED-RELAIS 12V	5322 280 20125
K 1008	EED-RELAIS 12V	5322 280 20125
K 1101	EED-RELAIS 12V	5322 280 20125
K 1102	EED-RELAIS 12V	5322 280 20125
K 1103	EED-RELAIS 12V	5322 280 20125
K 1104	EED-RELAIS 12V	5322 280 20125
K 1106	EED-RELAIS 12V	5322 280 20125
K 1107	EED-RELAIS 12V	5322 280 20125
K 1108	EED-RELAIS 12V	5322 280 20125
K 1201	EED-RELAIS 12V	5322 280 20125
K 4101	EED-RELAIS 12V	5322 280 20125
K 4201	EED-RELAIS 12V	5322 280 20125
S 6001		5322 276 11859
S 7002	BR	5322 277 10878
S 7004	BR	5322 277 10878
S 7006	BR	5322 277 10878
S 7008	BE	5322 277 10879
S 7010	BE	5322 277 10879
S 7012		5322 276 11857
S 7013		5322 276 11856
S 7014		5322 276 11856
S 7015		5322 276 11856
S 7016		5322 276 11856
S 7017		5322 276 11856
S 7018		5322 276 11856
S 7019		5322 276 11856
S 7020		5322 276 11856
S 7021		5322 276 11856
S 7022		5322 276 11856
S 7023		5322 276 11856
S 7024		5322 276 11856
S 7025		5322 276 11856
S 7026		5322 276 11856
S 7027		5322 276 11858
S 7028		5322 276 11858
S 7029		5322 276 11856
S 7030		5322 276 11856
S 7031		5322 276 11856
S 7032		5322 276 11856
T 0001	T 5X20 1,6A	4822 253 30024
T 6001	EDT-39 TRANSFORMER	5322 146 30591
T 6201	PG1 TFE30 TRANSFORM.	5322 146 30592

17. OPTIONS

17.1 Y-OUT

17.1.1 Characteristics

CHARACTERISTICS	SPECIFICATION	ADDITIONAL INFORMATION
* Y-out	via channel A	
Defl. coeff.	100 mV/div. +/- 10% 50 mV/div. +/- 10%	at R_{load} > 10 kOhm at R_{load} = 50 Ohm
* Bandwidth	> 50 MHz	
* Pulse aberrations		
LF pulse drop or tilt	< 2% < 3%	at R_{load}= 50 Ohm at R_{load}> 10 kOhm 5 div. pulse; +or- 2,5 div. from screen centre.
* HF pulse aberrations	< 6%	5 div. pulse (ac coupled)
* Dyn. range	+or- 12 div. > 6 div	at 10 MHz at 50 MHz
* DC output level	0 V	
Output drift (10°C-40°C)	< 50 mV	

17.1.2 Circuit description

The Y-OUT circuit receives its input current from the signal splitter D2002, pin 6 and 11 on the pre-amplifier unit. The symmetrical input is buffered by two common-base amplifiers V203. These two transistors are matched for a common Vbe to compensate temperature drift.
The symmetrical current signals are then converted into the asymmetrical Y-OUT voltage via the short-feedback amplifier N201-6,7,8. The amplitude of this Y-OUT voltage is the summation of the voltage across resistor R219 and R226. The offset can be adjusted to 0 V by means of potentiometer R201. Transistor V206 serves as the current source of this final stage.

17.1.3 Adjusting and checking procedure

Refer to figure 17.1 for location of the adjusting points.

NOTE: Be sure that the oscilloscope is well adjusted before starting this adjusting procedure.

Gain adjustment:

- Apply a 100 mV/2 kHz calibrated square-wave signal to input A.
- Connect the Y OUT output to input B by means of a coax cable.
- Press AUTO SET key.
- Set UP-DOWN ch. A to 20 mV.
- Set UP-DOWN ch. B to 0,1 V.
- Press AC/DC key ch. A for DC input coupling.
- Press AC/DC key ch. B for DC input coupling.
- Press ALT/CHOP key for chopped display.
- Press ADD/INVERT key for B-INV display.
- Adjust R209 for an equal amplitude of ch. A and ch. B (tolerance: +or- 1,5 subdiv.)

Offset adjustment:

- Press AUTO SET key.
- Press 0 key ch. A.
- Connect a digital multimeter to the Y-OUT connection of the BNC socket and the BNC-ground.
- Adjust R201 so that the output voltage is 0 V (tolerance: +or- 10 mV

Checking the gain:

- Press AUTO SET key.
- Set UP-DOWN ch. A to 20 mV.
- Set UP-DOWN ch. B to 0,1 V.
- Press AC/DC key ch. A for DC input coupling.
- Press AC/DC key ch. B for DC input coupling.
- Press A/B key for only ch. B display.
- Ensure that the amplitude of the displayed signal is 5 div. (tolerance: +or- 1,5 subdiv.)

- Terminate ch. B with 50 Ohm.
- Set UP-DOWN ch. B to 50 mV.
- Ensure that the amplitude of the displayed signal is 5 div. (tolerance: +or- 1,5 subdiv.

HF square-wave response adjustment:

- Apply a 120 mV/1 MHz calibrated square-wave signal with rise time faster than 1 nsec to input A.
- Connect the Y OUT output to a PM3295 oscilloscope means of a coax cable. (Input: 50 Ohm, sensitivity: 50 mV/div)
- Press AUTO SET key
- Set UP-DOWN ch. A to 20 mV.
- Press AC/DC key ch. A for DC input coupling.
- Ensure that the PM3295 displays a square wave signal of 6 div p-p approx.
- Adjust R223 and C203 for an optimal square-wave response.

Y-OUT bandwidth check:

- Apply a 120 mV/1 MHz sine-wave to input A.
- Connect the Y-OUT output to a PM3295 oscilloscope by means of a coax cable. (input: 50 Ohm, sensitivity: 50 mV/div).
- Press AUTO SET key.
- Set UP-DOWN ch. A to 20 mV.
- Press AC/DC key ch. A for DC input coupling.
- Ensure that the amplitude of the displayed signal is 6 div.; if necessary, readjust the amplitude of the input signal.
- Now, increase the frequency of the input signal to 50 MHz.
- Ensure that the amplitude of the displayed signal on the PM3295 is at least 5 div. p-p.

Checking the dynamic range:

- Apply a 0,25 mV/50 MHz sine-wave to input A.
- Connect the Y-OUT output to PM3295 oscilloscope by means of a coax cable. (input: 50 Ohm, sensitivity: 200 mV/div).
- Press AUTO SET key.
- Set UP-DOWN ch. A to 20 mV.
- Press AC/DC key ch. A for DC input coupling.
- Ensure that the displayed signal is shown without distortion or clipping.

- Change the input signal to 0,52 V/10 MHz sine wave.
- Change UP/DOWN ch. A to 0,1 V.
- Ensure that the displayed signal is shown without distortion or clipping.

17.1.4 Parts list

POS.NR	DESCRIPTION	ORDERING CODE
C201	10nF -20+150% 100V	4822 122 31414
C202	100pF -2% 100V	4822 122 31316
C203	10pF TRIM CAP	5322 125 11013
C204	1nF -10% 100V	4822 122 30027
C251	68uF -10+50% 16V	4822 124 20689
C252	10nF -20+50% 100V	4822 122 31414
C253	10nF -20+50% 100V	4822 122 31414
C254	68uF -10+50% 16V	4822 124 20689
C256	10nF -20+50% 100V	4822 122 31414
C257	10nF -20+50% 100V	4822 122 31414
R201	2K2 25% 0,3W	5322 105 20033
R202	16K2 1% MRS25	5322 116 53589
R203	1K33 1% MRS25	5322 116 53512
R204	1K33 1% MRS25	5322 116 53512
R206	100E 1% MRS25	5322 116 53126
R207	100E 1% MRS25	5322 116 53126
R208	7K5 1% MRS25	5322 116 53028
R209	2K2 25% 0,3W	5322 105 20033
R211	348E 1% MRS25	5322 116 53591
R212	51E1 1% MRS25	5322 116 53213

POS.NR	DESCRIPTION	ORDERING CODE
R213	51E1 1% MRS25	5322 116 53213
R214	23K7 1% MRS25	5322 116 53537
R216	287E 1% MRS25	5322 116 53221
R217	287E 1% MRS25	5322 116 53221
R218	100E 1% MRS25	5322 116 53126
R219	825E 1% MRS25	5322 116 53541
R221	6K19 1% MRS25	5322 116 53263
R222	1K78 1% MRS25	5322 116 53208
R223	470E 25% 0,3W	5322 105 20028
R224	10E 1% MRS25	5322 116 52891
R226	825E 1% MRS25	5322 116 53541
R227	1K33 1% MRS25	5322 116 53512
R228	287E 1% MRS25	5322 116 53221
R229	51E1 1% MRS25	5322 116 53213
R231	1K21 1% MRS25	5322 116 52956
R232	1K 1% MRS25	5322 116 53108
R233	348E 1% MRS25	5322 116 53591
R251	5E11 1% MRS25	4822 116 52999
R252	5E11 1% MRS25	4822 116 52999
R253	5E11 1% MRS25	4822 116 52999
V201	BAW62	4822 130 30613
V202	BAW62	4822 130 30613
V203	BF324 select	5322 693 90465
V204	BAW62	4822 130 30613
V206	BF370	4822 130 42589
N201	CA3127E	5322 130 42627
X204	3-P SNG-90°	5322 265 30433
3x	50 Ohm bus conn.	5322 268 24116
3x	50 Ohm pen conn.	5322 268 14141

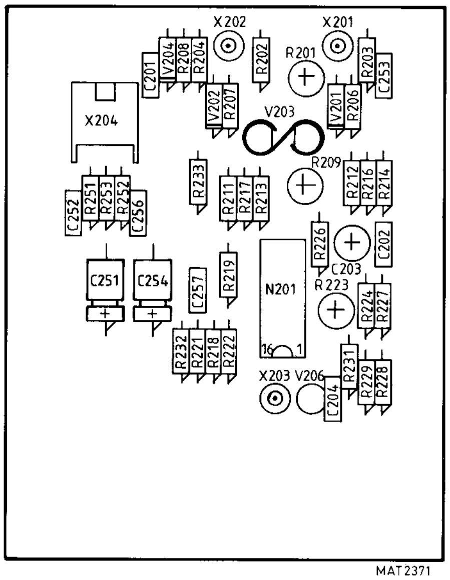
X202
X201
C201
V204
R208
R204
R202
R201
R203
C253
X204
V202
R207
V203
V201
R206
R209
R212
R216
R214
R233
R211
R217
R213
C252
R251
R253
R252
C256
R226
C202
C203
C251
C254
C257
R219
N201
R223
R224
R227
16
1
R232
R221
R218
R222
X203
V206
R231
C204
R229
R228
MAT2371

Figure 17.1 Y-OUT p.c.b.

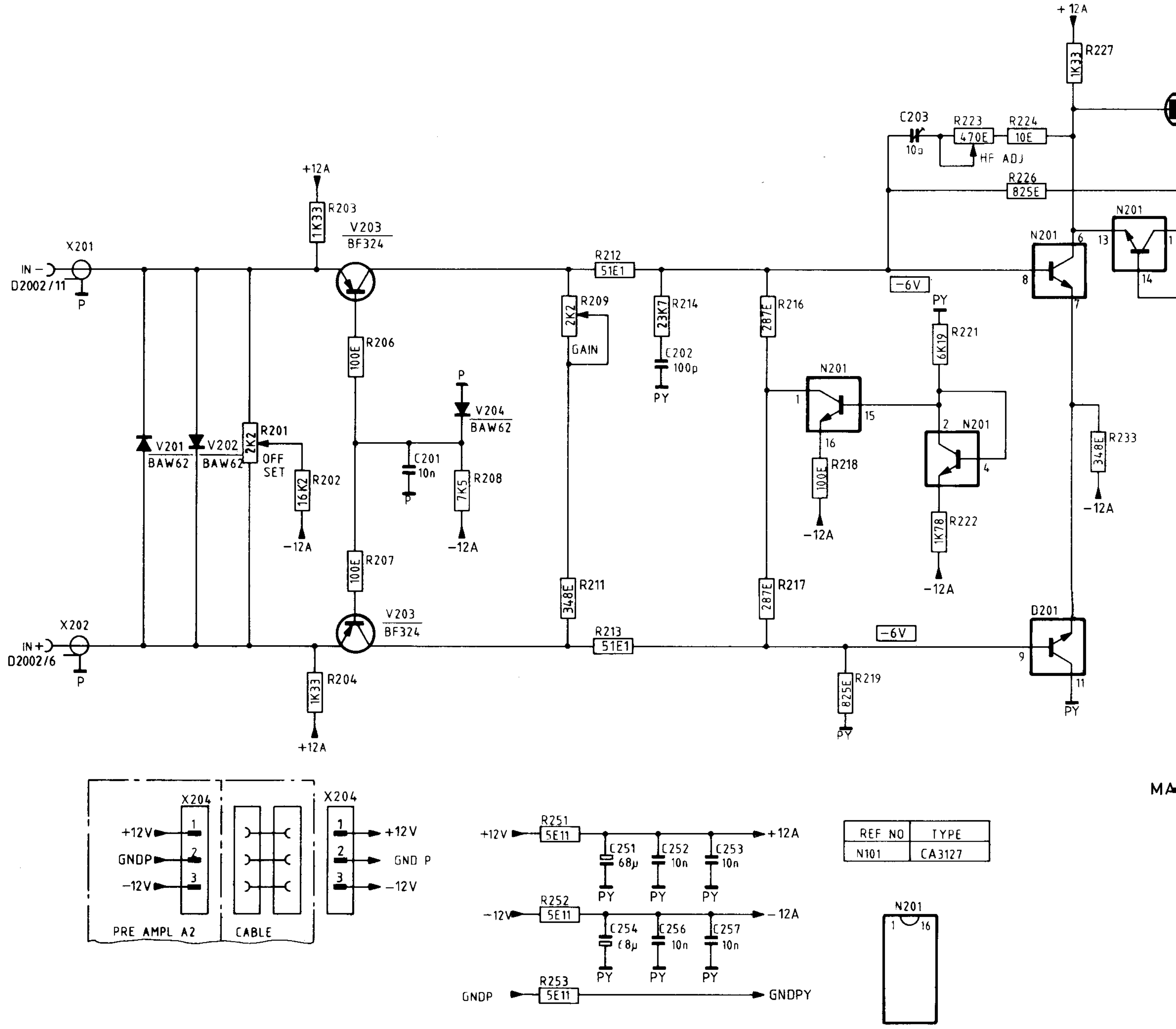
X201
IN –
D2002/11
P
X202
IN+
D2002/6
V201
BAW62
V202
BAW62
R201
2K2
OFF SET
R202
16K2
–12A
+12A
R203
1K33
V203
BF324
R206
100E
R207
100E
V203
BF324
R204
1K33
+12A
P
V204
BAW62
C201
10n
R208
7K5
–12A
R212
51E1
R209
2K2
GAIN
R214
23K7
C202
100p
PY
R211
348E
R213
51E1
R216
287E
R217
287E
N201
1
15
16
R218
100E
–12A
PY
R221
6K19
2
N201
4
R222
1K78
–12A
C203
10p
R223
470E
R224
10E
HF ADJ
R226
825E
–6V
–6V
R219
825E
PY
+12A
R227
1K33
N201
6
8
7
13
N201
14
R233
348E
–12A
D201
9
11
PY
MA
X204
+12V
GNDP
–12V
1
2
3
PRE AMPL A2
CABLE
X204
+12V
GND P
–12V
+12V
R251
5E11
+12A
C251
68µ
C252
10n
C253
10n
PY
–12V
R252
5E11
– 12A
C254
68µ
C256
10n
C257
10n
GNDP
R253
5E11
GNDPY
REF NO
TYPE
N101
CA3127
N201
1
16

Figure 17.2 Circuit diagram of Y-OUT option

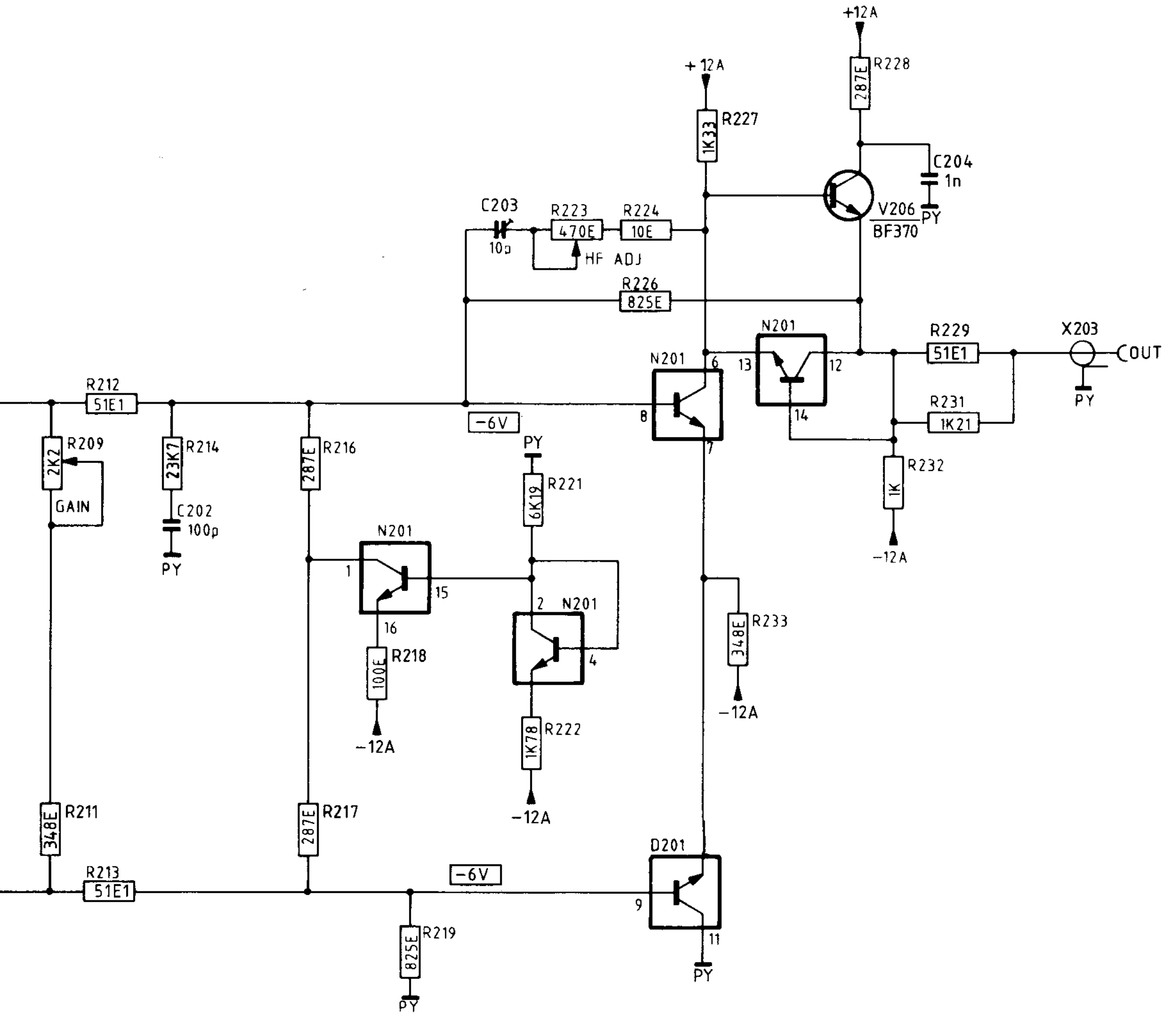
+12A
R228
287E
+12A
R227
1K33
C204
1n
PY
V206
BF370
C203
10p
R223
470E
R224
10E
HF ADJ
R226
825E
N201
6
13
12
R229
51E1
X203
OUT
PY
R231
1K21
R232
1K
-12A
14
N201
8
7
R212
51E1
R209
2K2
GAIN
R214
23K7
C202
100p
PY
R216
287E
-6V
PY
R221
6K19
N201
1
15
16
R218
100E
-12A
2
N201
4
R222
1K78
-12A
R233
348E
-12A
R211
348E
R217
287E
R213
51E1
-6V
D201
9
11
PY
R219
825E
PY

MAT 2370A

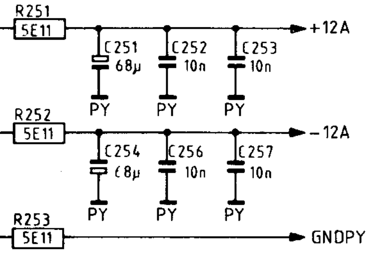
R251
5E11
C251
68µ
C252
10n
C253
10n
+12A
PY
PY
PY
R252
5E11
C254
68µ
C256
10n
C257
10n
-12A
PY
PY
PY
R253
5E11
GNDPY

REF NO	TYPE
N101	CA3127

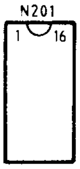

17.2 MTB GATE, DTB GATE AND MTB SWEEP

17.2.1 MTB gate

The BNC output socket gives a TTL-compatible signal, which is HIGH during the MTB sweep and LOW for other conditions.

Characteristics	Specification	Additional information
* Output voltage LOW	< 0,4 V	at +4 mA
* Output voltage HIGH	> 2,4 V	at -4 mA

17.2.2 DTB gate

The BNC output socket gives a TTL-compatible signal, which is HIGH during the DTB sweep and LOW for other conditions.

Characteristics	Specification	Additional information
* Output voltage LOW	< 0,4 V	at +4 mA
* Output voltage HIGH	> 2,4 V	at -4 mA

17.2.3 MTB sweep

The BNC output socket gives the MTB sawtooth signal.

Characteristics	Specification	Additional information
* Output voltage	0,5 V/div. +or-2,5%	at $R_{load} \geq$ 1 Meg-Ohm
* Linearity	< 3%	for definition, see MTB spec. in this manual.
* Output impedance	1 kOhm +or-2%	
* Offset voltage	< 250 mV	

17.2.4 Parts list

POS.NR	DESCRIPTION	ORDERING CODE
C421	10 nF -20+50% 100 V	4822 122 31414
C422	10 nF -20+50% 100 V	4822 122 31414
C423	10 nF -20+50% 100 V	4822 122 31414
R401	10 E 1% MRS25	4822 116 52891
R402	10 E 1% MRS25	4822 116 52891
R403	100 E 1% MRS25	5322 116 53126
R404	100 E 1% MRS25	5322 116 53126
R406	1 E 1% MRS25	4822 116 52976
R407	10 E 1% MRS25	4822 116 52891
R408	5k11 1% MRS25	5322 116 53494
R409	5k11 1% MRS25	5322 116 53494
R411	1 K 1% MRS25	4822 116 53108
R421	5E11 1% MRS25	4822 116 52999
R422	5E11 1% MRS25	4822 116 52999
R423	5E11 1% MRS25	4822 116 52999
V401	BC558B	4822 130 44197
V402	BC548C	4822 130 44196
D401	PC74HCT132P	4822 209 83044
3x 50 Ohm bus		5322 268 24116
3x 50 Ohm pin		5322 268 14141

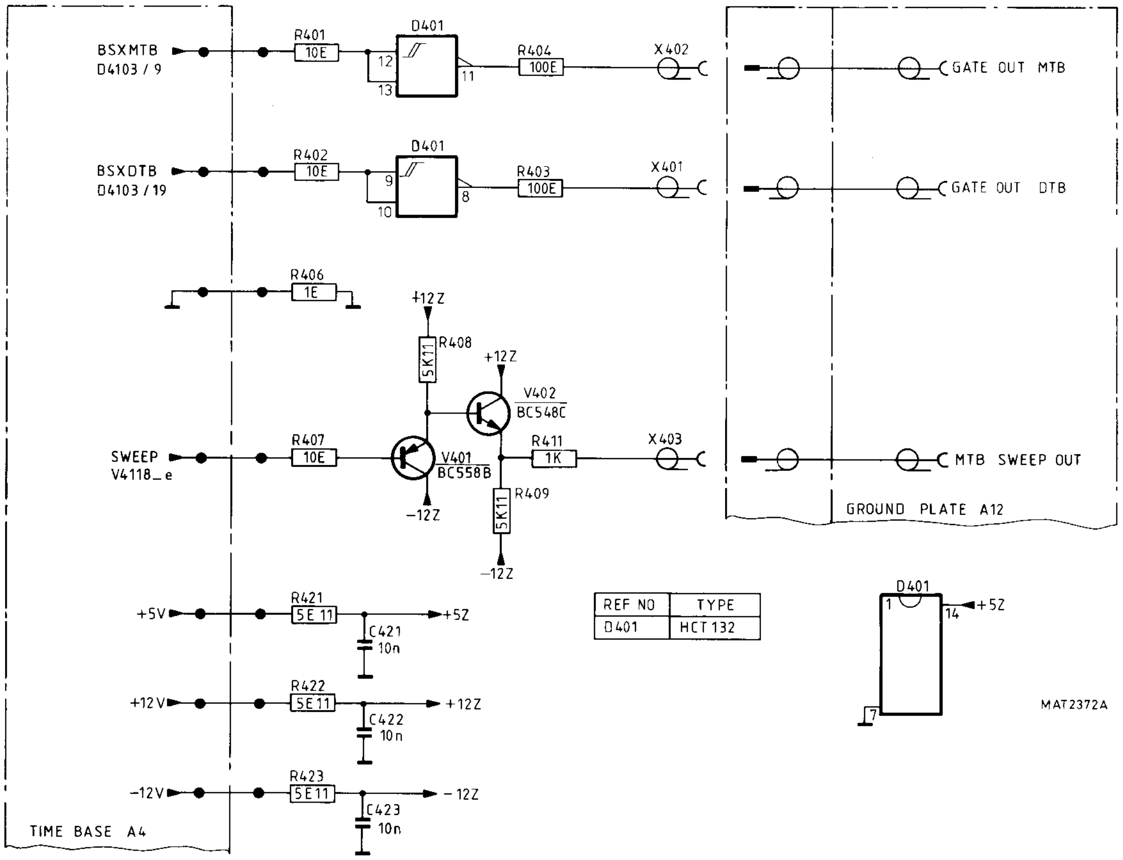
BSXMTB
D4103 / 9
R401
10E
D401
12
13
11
R404
100E
X402
GATE OUT MTB
BSXDTB
D4103 / 19
R402
10E
9
10
8
R403
100E
X401
GATE OUT DTB
R406
1E
+12Z
R408
5K11
V402
BC548C
SWEEP
V4118_e
R407
10E
V401
BC558B
R411
1K
X403
MTB SWEEP OUT
R409
5K11
-12Z
GROUND PLATE A12
REF NO
TYPE
D401
HCT132
1
14
+5Z
7
+5V
R421
5E11
C421
10n
+12V
R422
5E11
C422
10n
+12Z
-12V
R423
5E11
C423
10n
-12Z
TIME BASE A4
MAT2372A

Figure 17.3 Circuit diagram of MTB gate, DTB gate and MTB sweep options

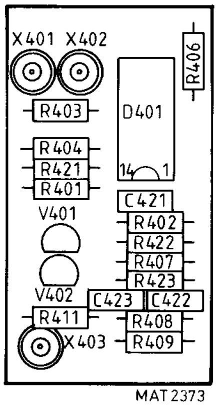
X401 X402
R403
D401
R406
R404
R421
R401
14
1
V401
C421
R402
R422
R407
R423
V402
C423
C422
R411
R408
X403
R409
MAT2373

Figure 17.4 P.c.b. for MTB gate, DTB gate and MTB sweep