ORDER NO. SD7708-1259

# Service Manual

QUARTZ Synthesizer

Direct Drive Automatic Turntable System

# SL-1300MK2A (X)
# SL-1300MK2 (E, XAL, XG, XGF)
# SL-1310MK2 (E, XG)
# SL-1300MK2A (E)
# SL-1310MK2A (XG, E)

- The model SL-1300MK2A (X) is available in Asia, Latin America, Middle East and Africa only.
- The model SL-1300MK2 (E) is available in Scandinavia and Switzerland only.
- The model SL-1300MK2 (XAL) is available in Australia only.
- The model SL-1300MK2 (XG) is available in European only.
- The model SL-1300MK2 (XGF) is available in France only.
- The model SL-1300MK2A (E) is available in Scandinavia and Switzerland only.
- The model SL-1310MK2 (E) is available in Scandinavia and Switzerland only.
- The model SL-1310MK2 (XG) is available in European only.
- The model SL-1310MK2A (XG) is available in European only.
- The model SL-1310MK2A (E) is available in Scandinavia and Switzerland only.
- SL-1300MK2 is of silver finish.
- SL-1300MK2 is of black finish.

## SPECIFICATIONS

Specifications are subject to change without notice for further improvement.

### General

| | |
|---|---|
| **Power supply** | ~110-120/220-240V, 50 or 60 Hz |
| **Power consumption** | 14W |
| **Dimensions (H x W x D)** | 14.5 x 45.3 x 38.4 cm (5-45/64 x 17-45/64 x 15-7/64 inches) |
| **Weight** | 11.8 kg (26.0 lb) |

### Turntable section

| | |
|---|---|
| **Type** | Quartz-phase-locked control direct drive automatic turntable with quartz synthesizer pitch control, Automatic start, Automatic return, Memo-repeat play and Manual play |
| **Drive method** | Direct Drive |
| **Motor** | Brushless DC motor |
| **Drive control method** | Quartz-phase-locked control |
| **Turntable platter** | Aluminum die-cast, diameter 33 cm (13"), weight 2.5 kg (5.5lb) |
| **Moment of inertia** | 340 kg·cm$^2$ (116 lb·in$^2$) |
| **Turntable speeds** | 33-1/3 and 45 r.p.m. |
| **Turntable speed fine Adjustment** | Adjustable up to ±9.9% in 0.1% increments by digital indication |
| **Starting torque** | 1.5 kg·cm (1.3 lb·in) |
| **Build-up characteristics** | 90° or 1/4 rotation to 33-1/3 rpm |
| **Braking system** | Electronic brake |
| **Speed fluctuation due to load torque** | 0% within 1.5 kg·cm (1.3 lb·in) |
| **Speed drift** | Within 0.002% |
| **Wow and flutter** | 0.025% WRMS (JIS C5521) ±0.035% weighted zero to peak (DIN 45507) |
| **Rumble** | −50 dB (DIN 45539A) −73 dB (DIN 45539B) |

### Tonearm section

| | |
|---|---|
| **Type** | Gimbal suspended universal "S" shaped tubular arm, staticbalanced type |
| **Effective length** | 230 mm (9-1/16") |
| **Overhang** | 15 mm (19/32") |
| **Tracking error angle** | +3° at the outer groove of 30 cm (12") record +1° at the inner groove of 30 cm (12") record |
| **Offset angle** | 21.5° |
| **Effective mass** | 22 g (with a cartridge weighting 6.5 g at 1.25 g stylus pressure |
| **Tonearm height adjustment** | 1 mm steps, a range of 6 mm |
| **Adjustable stylus pressure range** | 0 ~ 3g |
| **Cartridge weight range** | 5-11 g |
| **Cartridge mounting dimensions** | 12.7 mm (1/2") mounting space |
| **Headshell terminal lug** | 1.2 mm, for 4-pin terminal |

### Cartridge section

| | |
|---|---|
| **Model No.** | EPC-205CIIL |
| **Type** | Moving Magnet Stereo Cartridge |
| **Stylus arm** | Titamium (Ti) tapered-tube, specially hard-treated |
| **Frequency response** | 10 Hz to 25 kHz ±2 dB |
| **Output voltage** | 2 mV at 1 kHz, 5 cm/sec zero to peak lateral velocity (4 mV at 1 kHz, 10 cm/sec zero to peak lateral velocity DIN 45500) |
| **Channel separation** | 25 dB, at 1 kHz 20 dB, at 10 kHz |
| **Channel balance** | within 1 dB, at 1 kHz |
| **DC resistance** | 30 ohms |
| **Impedance** | 250 ohms, at 1 kHz |
| **Inductance** | 40 mH |
| **Compliance (dynamic)** | 12 x 10 $^{-6}$cm/dyne, at 100 Hz (CBS STR-100) |
| **FIM distortion** | 0.6% (DIN 45500) |
| **Stylus pressure** | 1.25±0.25 gram (12.5±2.5 mN) |
| **Recommanded load resistance** | 10 K ohms to 1 M ohms |
| **Recommended load capacitance** | less than 500 pF |
| **Stylus tip** | 0.2 x 0.7 mil (5 x 18μm) elliptical stylus, 0.15 mm square naked diamond |
| **Weight** | 6.5 grams (cartridge only) |
| **Mounting Dimension** | Standard 1/2 inch mounting spacing |
| **Terminals** | 1.2 mm diameter, 4 pin terminals |
| **Replacement stylus** | **EPS-205EX** |

Technics

**Matsushita Electric Trading Co., Ltd.**
P.O. Box 288, Central Osaka Japan

## TECHNISCHE DATEN

Spezifikationen können infolge von Verbesserungen ohne Ankündigung geändert werden.

### Allgemeine Daten

| | |
|---|---|
| **Stromversorgung** | ~ 110-120/220-240V, 50/60 Hz Wechselstrom |
| **Leistungsaufnahme** | 14W |
| **Abmessungen** | 14,5 x 45,3 x 38,4 cm (H x B x T) |
| **Gewicht** | 11,8 kg |

### Plattenspieler

| | |
|---|---|
| **Typ** | Quarzgesteuerter Direktantrieb-Automatik-Plattenspieler mit Quarz-Drehzahl-Feinregulierung, mit Start-automatik, Rückkehrautomatik, Abschaltautomatik, Memo-Repeat-Betrieb und manuellem Betrieb. |
| **Antrieb** | Direktantrieb |
| **Motor** | Kollektorloser Gleichstrommotor |
| **Antriebsregel-Methode** | Quarz-Steuerung QPL (Quartz-phase-locked) |
| **Plattenteller** | Aluminium-Spritzguß, 33 cmø |
| **Trägheitsmoment** | 340 kg/cm² |
| **Plattenteller-Drehzahlen** | 33-1/3 und 45 U/min |
| **Plattenteller-Drehzahl-Feinregulierung** | Regulierbar über einen Bereich von ±9,9% in Stufen von 0,1%, mit Digital-Anzeige |
| **Anlaufdrehmoment** | 1,5 kg/cm |
| **Drehzahl-Hochlaufdauer** | 90° oder 1/4 Umdrehung bei 33-1/3 U/min |
| **Bremssystem** | Elektronische Bremse |
| **Drehzahl-Schwankung Wegen Belastungs-Drehmoment** | 0% innerhalb 1,5 kg/cm |
| **Drehzahl-Abweichung** | Innerhalb 0,002% |
| **Gleichlaufschwankungen** | 0,025% WRMS (JIS C5521) ±0,035% bewertet Null-zu-Spitze (DIN 45507) |
| **Rumpel-Fremspannungsabstand** | −50 dB (DIN 45539A) |
| **Rumpel-Geräuschspannungsabstand** | −73 dB (DIN 45539B) |

### Tonarm

| | |
|---|---|
| **Typ** | S-förmiger Universal-Rohrtonarm, statisch ausbalanciert, mit Kardan-Aufhängung. |
| **Effektive Länge** | 230 mm |
| **Überhang** | 15 mm |
| **Spurfehlwinkel** | +3° bei der äußeren Rille einer 30 cm-Platte<br>+1° bei der inneren Rille einer 30 cm-Platte |
| **Kröpfungswinkel** | 21,5° |
| **Lagerreibung** | weniger als 7 mg (horizontal, vertikal) |
| **Effektive Masse** | 22 g (mit einem Tonabnehmer von 6 g Gewicht bei 1,75 g Auflagedruck |
| **Tonarmhöhe-Regelbereich** | in Stufen von 1 mm über einen Bereich von 6 mm |
| **Auflagedruck-Einstellbereich** | 9,5 g |
| **Tonabnehmer-Gewichtbereich** | 5 – 11 g |
| **Tonabnehmer-Einbaunorm** | 12,7 mm Einbauraum |
| **Tonarmkopf-Steckerstifte** | 1,2 mmø, für 4-Stift-Kontakt |

### Tonabnehmer

| | |
|---|---|
| **Modell-Nummer** | EPC-205CIIL |
| **Typ** | Magnet-Stereo-Tonabnehmer |
| **Nadelträger** | Konische Titan-(Ti) Röhre spezialgehärtet |
| **Frequenzgang** | 10 Hz-25 kHz ±2 dB |
| **Ausgangsspannung** | 2 mV bei 1 kHz, 5 cm/sec Null-zu-Spitze, lateral (4 mV bei 1 kHz, 10 cm/sec Null-zu-Spitze, lateral, DIN 45500) |
| **Kanaltrennung** | 25 dB bei 1 kHz<br>20 dB bei 10 kHz |
| **Kanalabweichung** | innerhalb 1 dB bei 1 kHz |
| **Gleichstromwiderstand** | 30Ω |
| **Impedanz** | 250Ω bei 1 kHz |
| **Induktanz** | 40 mH |
| **Nachgiebigkeit (dynamisch)** | 12 x $10^{-6}$cm/Dyn bei 100 Hz (CBS STR-100) |
| **FIM-Verzerrung** | 0.6% (DIN 45500) |
| **Auflagekraft** | 1.25±0.25 g (12.5±2.5 mN) |
| **Empfohlener Belastungswiderstand** | 10 k Ohm-1 M Ohm |
| **Empfohlende Belastungskapazität** | weniger als 500 pF |
| **Nadelspitze** | 0.2 x 0.7 Mil (5 x 18μm), elliptisch, über Quadrat von 0.15 mm Seitenlänge |
| **Gewicht** | 6.5 g (ohne Tonarmkopf) |
| **Montageabmessung** | Standard 1.25 cm Montageabstand |
| **Anschlüsse** | 1.2 mm ø, 4-Stift |
| **Ersatznadel** | EPS-205EX |

## CARACTERISTIQUES TECHNIQUES

Sujet à changement sans préavis.

### Généralités

| | |
|---|---|
| **Alimentation** | Alternatif 110-120/220-240V, 50 ou 60 Hz. |
| **Consommation** | 14W. |
| **Dimensions** | 14,5(H) x 45,3(L) x 38,4(P) cm. |
| **Poids** | 11,8 kg. |

### Platine de lecture

| | |
|---|---|
| **Type** | Platine automatique à entraînement direct à réglage d'accrochage de phase par quartz, avec réglage d'écart du synthétiseur à quartz; Démarrage automatique; Retour automatique; Arrêt automatique; Audition de mémoire répétée et Audition manuelle. |
| **Systéme d'entraînement** | Entraînement direct. |
| **Moteur** | Moteur C.C. sans balais. |
| **Groupe de réglage** | Réglage d'accrochage de phase par quartz. |
| **Plateau de lecture** | Aluminium matricié, diamétre 33 cm (13") poids 2,5 kg. |
| **Moment d'inertie** | 340 kg.cm². |
| **Vitesses de rotation** | 33-1/3 et 45 t/p.m. |
| **Réglage précis de Vitesse du plateau** | Réglable jusqu'à ±9,9% avec 1% d'inc 1% d'incréments par indication numérique. |
| **Couple de démarrage** | 1,5 kg.cm. |
| **Caractéristiques d'augmentation** | 90° ou 1/4 de rotation à 33-1/3 t/p.m. |
| **Systéme de freinage** | Frein électronique. |
| **Variation de vitesse dûe au couple de charge** | 0% en deçà de 1,5 kg.cm. |
| **Déviation du nombre de tours** | En deçà de 0,002%. |
| **Pleurage et vibrato** | 0,025% de valeur efficace (JIS C5521), ±0,035% pondéré de zéro à la crête. (DIN 45507). |
| **Ronflement** | −50 dB (DIN 45539A).<br>−73 dB (DIN 45539B). |

### Bras de lecture

| | |
|---|---|
| **Type** | Bras tubulaire universel en forme de "S" suspendu à la cardan, de type à équilibrage statique. |
| **Longueur effective** | 230 mm. |
| **Surplomb** | 15 mm. |
| **Angle d'erreur de synchronisme** | +3° au sillon extérieur d'un disque de 30 cm (12").<br>+1° au sillon intérieur d'un disque de 30 cm (12"). |
| **Angle de décalage** | 21,5°. |
| **Frottement** | Moins de 7 mg (latéral et vertical). |
| **Masse réelle** | 22 g (avec une cellule de lecture pesant 6 gr, à une pression d'appui vertical de 1,75 gr.). |
| **Réglage de la hauteur du bras de lecture** | Plage de 6 mm par étapes de 1 mm. |
| **Plage de pression réglable de la pointe de lecture** | 9,5 g. |
| **Gamme du poids de la cellule de lecture** | 5-11 g. |
| **Dimensions de l'assemblage de la cellule de lecture** | Ecart d'agencement de 12,7 mm. |
| **Pièce polaire de la coque porte-cellule** | 1,2 mm, pour une borne à broche tétrapolaire. |

### Cellule pick-up

| | |
|---|---|
| **Modèle No.** | EPC-205CIIL |
| **Type** | Cellule Magnétique mobile Stéréo |
| **Stylet** | Tube conique en titane, spécialement traité. |
| **Réponse en fréquence** | 10 Hz à 25 kHz ±2 dB |
| **Tension de sortie** | 2 mV à 1 kHz, 5 cm/sec zéro à crête latérale (4 mV à 1 kHz, 10 cm/sec zéro à crête latérale. DIN 45500) |
| **Séparation de canal** | 25 dB, à 1 kHz<br>20 dB à 10 kHz |
| **Balance de canal** | moins de 1 dB, à 1 kHz |
| **Résistance C.C.** | 30 ohms |
| **Impédance** | 250 ohms, à 1 kHz |
| **Inductance** | 40 mH |
| **Elasticité (dynamique)** | 12 x $10^{-6}$cm/dyne, à 100 Hz (CBS STR-100) |
| **Distorsion FIM** | 0.6% (DIN 45500) |
| **Pression de la pointe de lecture** | 1,25±0,25 gramme (12,5±2,5 mN) |
| **Résistance de charge recommandée** | 10 k ohms à 1 M ohms |
| **Capacité de charge recommandée** | inférieure à 500 pF |
| **Entrémité de la pointe de lecture** | Diamant nu, carré de 0,15 mm, forme ellipsoïdale de 0,2 x 0,7 mil.(5 x 18μm). |
| **Poids** | 6,5 grammes (cellule seule) |
| **Dimensions de montage** | Espacement de montage standard de 1,2 cm |
| **Bornes** | 4 bornes de 1,2 mm de diamètre |
| **Pointe de lecture de remplacement** | EPS-205EX |

# ■ FEATURES

Encounter two separate isolation stages. The first stage effectively damps out harmful external vibrations which may reach the unit through its resting surface. The all-important turntable, motor and tonearm assembly are then supported on a second isolation system. These isolators are specially designed with material and springs of calculated, finely-tuned elasticity to absorb external vibrations.
Isolation from feedback lets you enjoy clear, transparent sound even at high volume levels.

**Technics unique motor construction in which the rotor of the motor is integrally formed with the turntable.**

**High torque motor delivering 1.5kg·cm makes it possible to reach 33-1/3 r.p.m. from standstill within 0.7 sec. (1/4 rotation) and to effect instantaneous speed change. (Fig. 1).**

**Superior load characteristic of 0 rotational deviation even at a stylus pressure of 300 g. (Fig. 2).**

**High performance with wow and flutter of only 0.025% (JIS C5521) and rumble of −73 dB (DIN 45539B).**
Since the development of the DD turntable, Technics has continually strived for further improvement of player performance and has introduced numerous high performance models on the market.
The SL-1300MK2 series is brought into being by combination of experience and research.
The characteristic values of rumble −73 dB (DIN 45539B) and wow and flutter of 0.025% (W.R.M.S JIS C5521) by far exceed the standards to which record albums are made.

**Quartz Controlled Rotation Accuracy**
The SL-1300MK2 utilizes the oscillation of a quartz crystal as a reference signal or source. This oscillation is not affected by temperature change or power fluctuations. By synchronizing the rotation of the turntable platter accurately to the reference signal, speed drift of the SL-1300MK2 is held within ±0.002%. This means that for a record with a playing time of 30 min, total playing time variation can amount to no more than 0.036 sec. This stable and accurate rotation sets a new standard of precision.
The accuracy under controlled operating conditions as in a listening room is about ±0.00001% as shown in Fig. 3.

**Highly sensitive universal tonearm.**
For the finest tracking sensitivity, the tonearm rests in a gimbal suspension equipped with two pairs of low friction pivot bearings. Gimbal suspension and low tonearm mass means that accurate tracking is possible at tracking forces as low as 0.25 grams. With enhanced rotational sensitivity of 7 mg. the tonearm is allowed free, gyroscopic movement to ensure flawless balance during tracking. The longer-than-usual effective tonearm length (9-1/16" or 230 mm, stylus to pivot) contributes to the arm's low tracking error, and this in turn facilitates the design of the anti-skating control for precise and reliable tracking. With this design, a single precise anti-skating scale counteracts side thrust for all types of styli.

**Arm height is adjustable within a range of 6 mm to accomodate varying cartridge dimensions.**

**Resonance dampened headshell with unique overhang adjuster.**

**Low capacitance phonocables.**

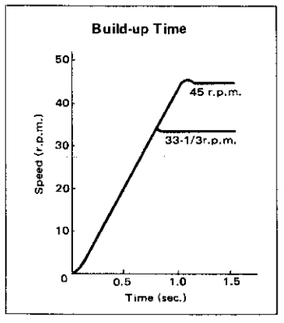

Fig. 1

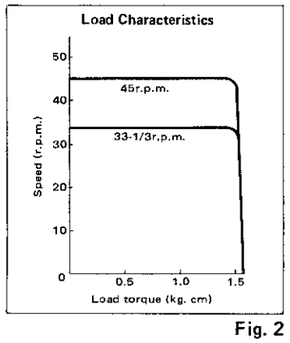

Fig. 2

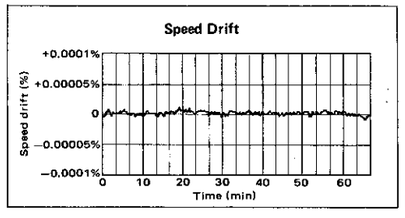

Fig. 3



# ■ CROSS SECTION OF MOTOR PORTION AND DOUBLE INSULATOR

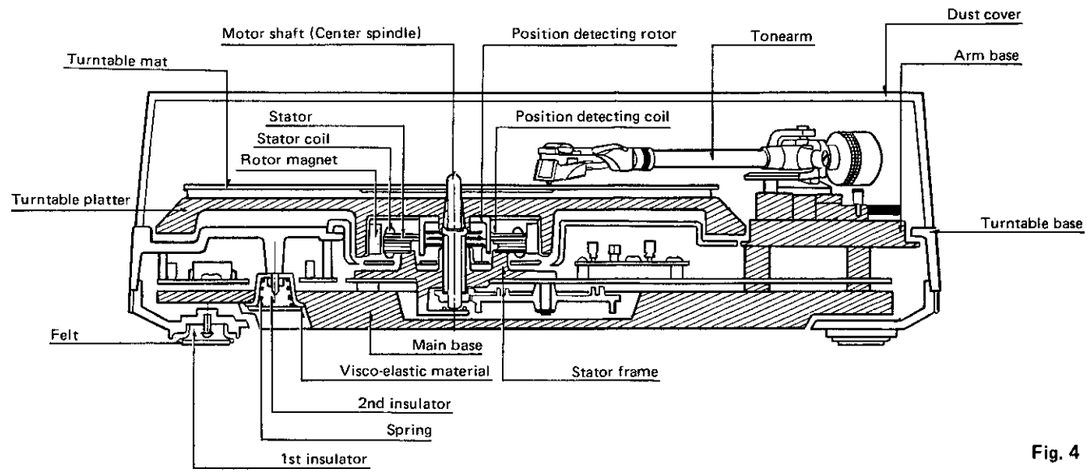

Fig. 4

# ■ PARTS IDENTIFICATION

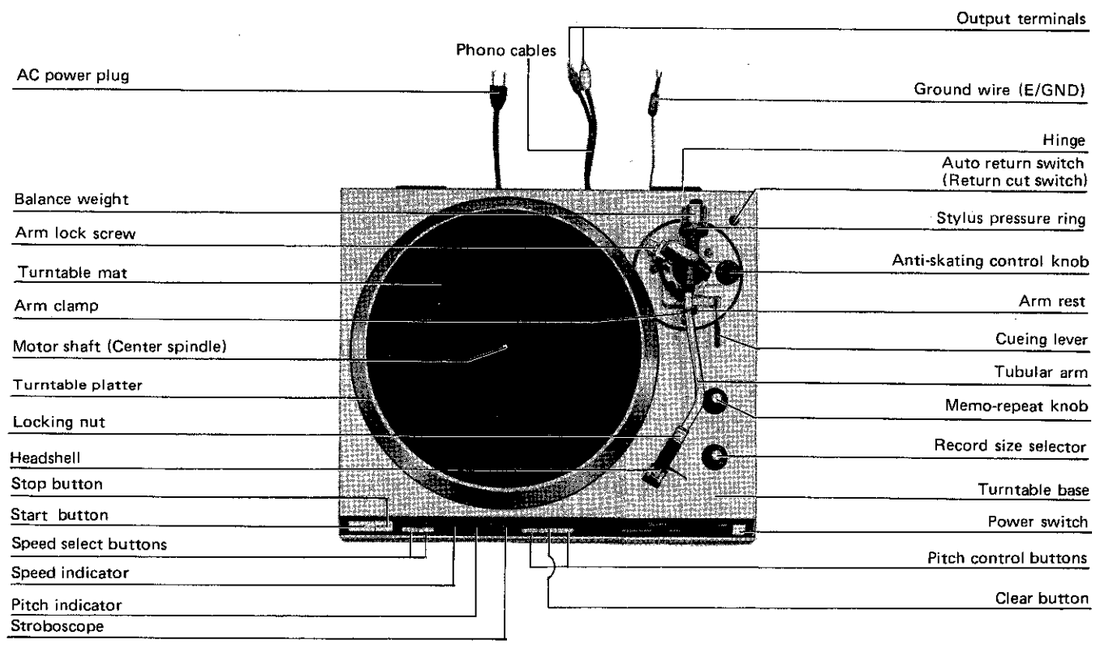

Fig. 5

# ■ TO REMOVE CABINET AND BOTTOM COVER

1. Remove headshell and balance weight.
2. Clamp tone arm to the arm rest.
3. Remove turntable platter.
4. Close dust cover.
5. Turn unit upside down taking special care not to damage or scratch the dust cover.
6. Remove the 7 screws from bottom cabinet (Fig. 6).
7. Remove the 4 screws from main base (Fig. 7).
8. Holding the player firmly with both hands, to prevent separation of upper section (turntable base) from lower section (main base), turn it carefully upwards.
9. Remove dust cover.
10. Remove the 6 screws from the panel cover (Fig. 8).
11. Unplug the 5 plug-in connectors and 1 cord clamp (Fig. 9).
12. To remove the turntable base from the main base bottom section, turn cueing lever upward (cueing position) and move tone arm towards center of spindle. Top section can be lifted up easily.
13. To reassemble, perform steps 1 through 12 in reverse.

**Note:**
The turntable horizontally to the panel face is already adjusted before shipment.
If deviated, correct it by means of the adjust screws using a 5 mm box spanner.

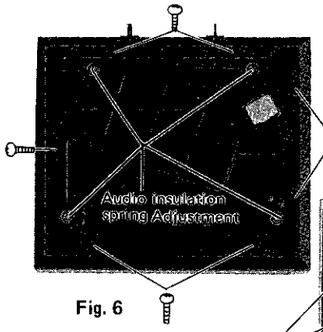

Fig. 6

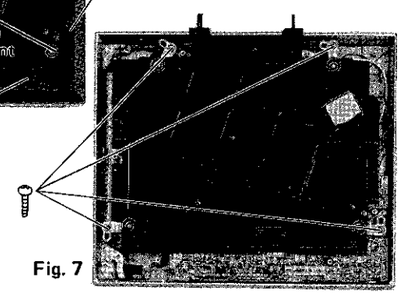
Fig. 7

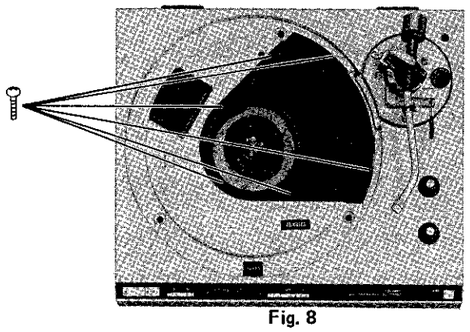
Fig. 8

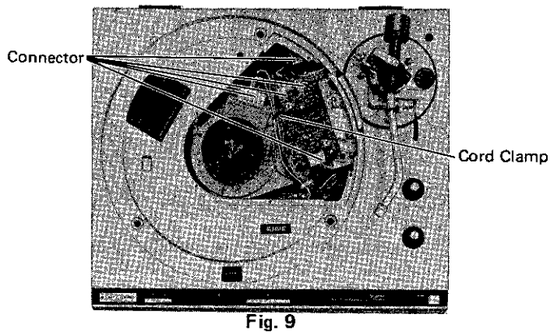

Fig. 9

# ■ CONNECTOR CONNECTION POINTS FOR INSPECTION

Connect the disassembled main unit and main base as shown in the Figure below.

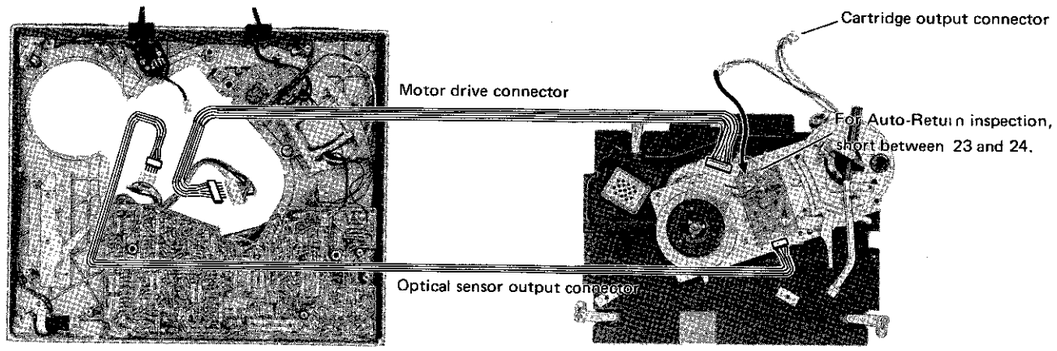

Fig. 10



# ■ HOW TO PLAY

## Manual play

**Place a record on the turntable platter.**
Push the 45 r.p.m. speed select button if you play a 45 r.p.m. record. (See Fig. 11).
**Note:**
Since the unit has been designed to select 33-1/3 r.p.m. automatically each time you push the power switch on, push the speed select button if you play a 45 r.p.m. record.

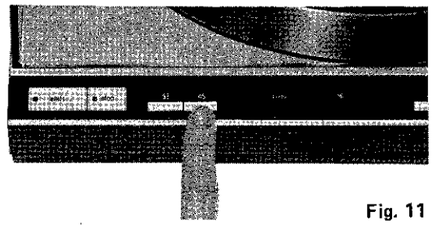
Fig. 11

**Move the tonearm manually over the record, the turntable will start to rotate. Lower the cueing lever.**
The tonearm will descend slowly onto the record and play will begin.

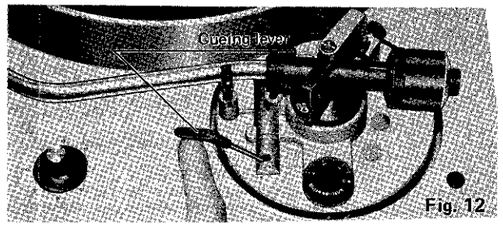

Fig. 12

**When finished, the tonearm will automatically return to the arm rest (auto return) and the turntable platter will stop rotation.**
**Note:**
- To shut the power off the power switch must be pushed again to the off (■).
- If the "memo-repeat" knob is in a position other than "0", play will be repeated by the number of time set, therefore, be sure to keep the "memo-repeat" knob in the "0" position.
- If you play a 45 r.p.m. record with a large center hole, use the furnished adaptor on the center spindle.

## Automatic play

**Push the power switch to the ON position (▬).**
The speed indicator for 33-1/3 r.p.m. the pitch indicator and stroboscope will all light up.

**Place a record on the turntable platter.**

**Release the arm clamp.**
Remove the stylus cover if your cartridge has one.

**Set the record size selector to the diameter of the record (7", 10" or 12") you wish to play.**

**Push the start button. (See Fig. 13).**
The tonearm will move and descend according to the size selected and start play (Automatic start).

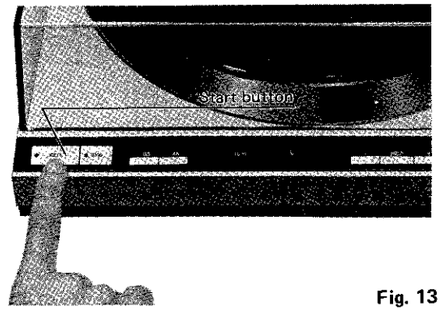

Fig. 13

**When finished play, the tonearm will automatically return to the arm rest and the turntable platter will stop rotation.**
**Note:**
- Records with dimensions other than 7" (17 cm), 10" (25 cm) and 12" (30 cm) diameter must be played "Manually".

## Repeat play

This unit employs a unique feature the "Memo-repeat". You can play a record repeatedly from one to six times or continuously by setting this knob to the desired position.

**Set the "memo-repeat" knob to the desired number you wish to play. (See Fig. 14).**
**"R" position enables you to repeat play continuously.**

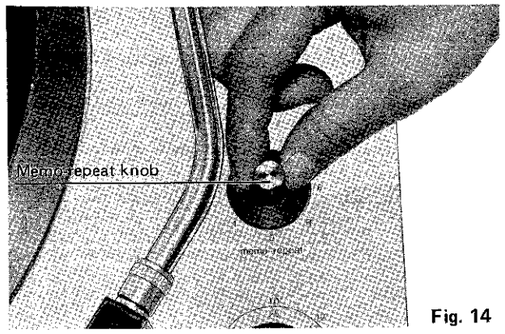

Fig. 14

**Note:**
For suspension of play, be sure to push the stop button after having set the "memo-repeat" knob to "0".

## ■ HOW TO USE AUTO RETURN SWITCH

This unit employs a unique "auto return switch" (return cut switch).

- Should any phono disc whose central hole is off center be played, the tonearm will automatically return during the course of performance. In such a case, set the auto return switch to the OFF (■) position (see Fig. 15), and then the phono disc can be played to the final groove.

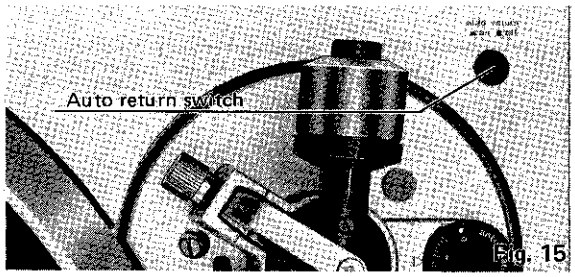

Fig. 15

**Note:**
For restoring the normal auto return function, set the switch back to the ON (▬) position.

## ■ HOW TO SUSPEND AND STOP PLAY

- For temporary suspension of play, raise the cueing lever, and the stylus tip of the cartridge, will lift from the record.
- For suspension of play, push the stop button.
  The tonearm automatically returns to the arm rest and the turntable stops rotating.

**Note:**
The stop button will light up after the tonearm returns to the arm rest.

## ■ ADJUSTMENTS-1

**Adjustment of the arm height. (See Fig. 16, 17)**

- This tonearm has been locked in the highest position before shipping from the factory, adjust the arm height according to your cartridge height.
- Loosen the arm lock screw. And push the arm pivot bearing support downward until the tonearm is paralled with the record surface.

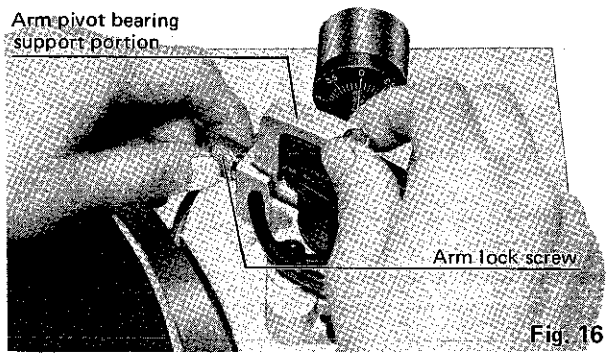

Fig. 16

- If the cartridge height is 18 mm as shown in the picture, lock the arm bearing support at the line indicated in the picture. (See Fig. 17) The arm height can be adjusted in 1 mm increments over a range of 6 mm.

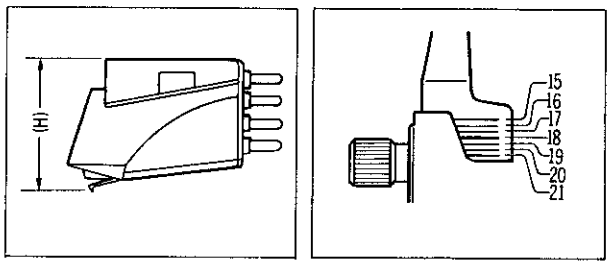

Fig. 17

## ■ ADJUSTMENTS-2

**Pitch control (turntable speed fine adjustment)**
By the employment of the Quartz Synthesizer pitch control for being employed for the first time in the world, a high degree of pitch control accuracy over a range as wide as ±9.9% in 0.1% increments can be obtained independently, with the quartz locked speed accuracy.

Additionally, the pitch variations which are clearly indicated by the LED digital indicator provide you with accurate and easy selection.

- The pitch control can be selected in increments of 0.1% which is below the threshold of human perception. This function can be very effective for minor extension or reduction of broadcasting time in professional applications.

- The pitch control also enables you to accurately and precisely tune with musical instruments, and by varying the pitch slightly to obtaining a different musical note from phono disce.
  For a half tone change:
  +5.9% (#)
  −5.6% (b)
- Another feature of the variable pitch control over a wide range of ±9.9% is that it makes singing along with a melody easy for a choral or playing a phono disc for accompaniment only.
  By pressing the clear button which is located between the "+" and "−" pitch buttons, you can quickly return the set to normal playing speed.

**Adjustment of the muting time and arm height.**
(See Fig. 18 and 19)
This unit employs "muting switch" combination with arm lift to cut off the irritating noise when the stylus is set down on or lifted up from the record. You can adjust the muting time by adjusting the arm lift height (distance between the stylus tip and record surface when cueing lever is raised).
If the clearance becomes too narrow or too wide because of the physical size of the different cartridge on the market, turn the adjustment screw clockwise or counterclockwise, while pushing the arm lift down.
**Clockwise rotation**
— distance between the record and stylus tip is reduced, and muting time becomes longer.
**Counterclockwise rotation**
—distance between the record and stylus tip increases, and muting time becomes shorter.

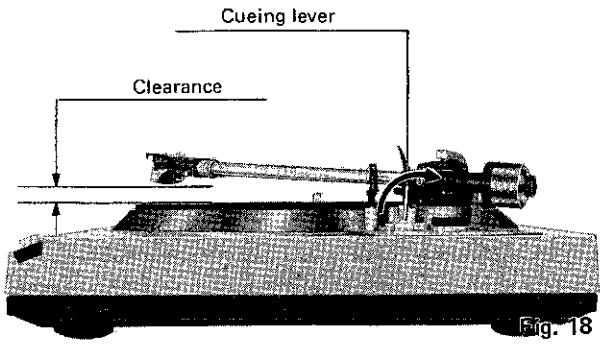

Fig. 18

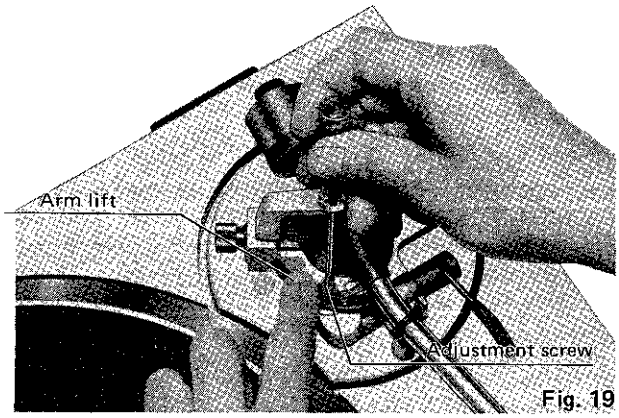

Fig. 19

**Note:**
As the adjusting screw has a hexagon head, be sure to make the adjustment while depressing the arm lift, and be sure that the hexagon head retract correctly into the arm lift when released.

**Adjustment for automatic start and automatic return positions.**
Should the tonearm not set down or lift off at the correct points, make adjustments according to the following procedures.

**Adjustment for automatic start position (See Fig. 20).**
1) Keep the power switch turned OFF (■) to prevent the turntable from rotation.
2) Remove the rubber cap.

In cases where the stylus tip sets down outside of the record.
— Move counterclockwise.
In cases where the stylus tip sets down on the recorded groove. -Move clockwise.

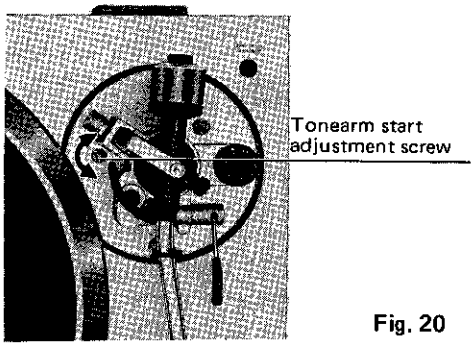

Fig. 20

**Adjustment for automatic return position (See Fig. 21).**
1) Keep the power switch turned OFF (■) to prevent the turntable from rotation.
2) Remove the rubber cap.
3) Move the tonearm toward the center spindle side, and make the adjustment by gradually turning the adjusting screw.

In cases where the tonearm tends to return before the playing has finished.
— Move counterclockwise.
In cases where the tonearm fails to return after the last groove of the record.
—Move clockwise.
**Note:**
Never turn the screw over a 180-degree angle.

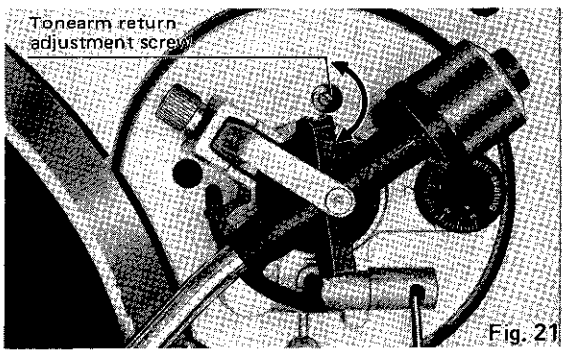

Fig. 21

# ■ JUSTIERUNGEN-1

**Justierung der Tonarmhöhe** (Fig. 16, 17)

- Dieser Tonarm ist vor der Auslieferung aus der Fabrik in seiner höchstmöglichen Position festgestellt worden. Justieren Sie die Tonarmhöhe entsprechend der Höhe des verwendeten Tonabnehmers.
- Lösen Sie die Tonarm-Verriegelungsschraube, und drücken Sie den Tonarm-Zapfenlagerträger soweit nach unten, bis der Tonarm waagrecht über der Schallplatte zu liegen kommt.
- Falls die Höhe des Tonabnehmers 18 mm beträgt, wie in der Abbildung gezeigt, verriegeln Sie den Zapfenlagerträger an der in der Abbildung gezeigten Linie (Fig. 17).
  Die Tonarmhöhe kann in Stufen von 1 mm über einen Bereich von 6 mm reguliert werden.

# ■ JUSTIERUNGEN-2

**Drehzahl-Feinregulierung**

Die Verwendung der Quarz-Synthesizer-Drehzahl-Feinregulierung-eine Weltneuheit im Plattenspielerbau—, erlaubt einen bisher unerreicht hohen Grad an Genauigkeit in der Drehzahl-Feinregulierung: unabhängige Regulierung in 0,1%-Stufen über einen Gesamtbereich von ±9,9%, dank der Quarz-gesteuerten Drehzahlpräzision. Und zur Vollendung der Bequemlichkeit in der Drehzahl-Feinabstimmung, kann die Abweichung jederzeit von der übersichtlichen LED-Digital-Anzeige abgelesen werden.

- Die Drehzahl-Feinregulierung kann in Stufen von 0,1% vorgenommen werden; einem Wert, der weit unter dem menschlichen Wahrnehmungsvermögen liegt. Diese Funktion ist äußerst wirkungsvoll für geringfügige Verlängerung oder Verkürzung der Sendezeit in Radio-Studios.
- Die Drehzahl-Feinregulierung gibt Ihnen außerdem die Möglichkeit, die Tonhöhe einer Schallplatte genau auf diejenige eines Musikinstrumentes abzustimmen oder die Tonhöhe leicht zu verändern, um von Schallplatten eine Musiknote zu erhalten.
  Für eine halbe Note: +5,9% (#)
  −5,6% (b)
- Ein weiterer Vorzug der über einen weiten Bereich von ±9,9% veränderlichen Tonregelung ist, daß sie das Mitsingen zu einer Melodie, oder das Abspielen einer Platte lediglich zur Begleitung so einfach macht.
  Durch Drücken der Lösch-Taste, die sich zwischen der "+" und der "−" Drehzahl-Feinregulierungs-Taste befindet, können Sie den Antrieb sofort auf die normale Drehzahl zurückstellen.

**Einstellung der Tonarmlift höhe** (Fig. 18 und 19).

Die Tonarmlifthöhe (der Abstand zwischen Nadelspitze und Schallplattenoberfläche, in Stellung "Hoch" des Lift-Hebels, ist vor der Auslieferung aus der Fabrik auf ungefähr 10 mm eingestellt worden.

Falls der Abstand zu klein oder zu groß wird, wenn ein Tonabnehmer von anderen Abmessungen verwendet wird, drehen Sie die Justierschraube im Uhrzeigersinn oder im Gegenuhrzeigersinn, währenddem Sie den Tonarmliftarm niederdrücken.

In diesem Plattenspieler ist die Funktion des "Dämpfungsschalters" mit dem Tonarmlift gekoppelt, damit störende Geräusche beim Absenken der Abtastnadel auf die Schallplatte oder beim Abheben eliminiert werden. Sie können die Dämpfungsdauer durch Regulieren der Tonarmlifthöhe verlängern oder verkürzen.

**Drehung im Uhrzeigersinn**

—Der Abstand zwischen der Schallplatte und der Abtastnadel wird verkleinert, und die Dämpfungszeit wird länger.

**Drehung im Gegenuhrzeigersinn**

—Der Abstand zwischen der Schallplatte und der Abtastnadel wird vergrößert, und die Dämpfungszeit wird kürzer.

**Bemerkung:**

Da die Justierschraube einen Sechskantkopf hat, muß der Tonarmliftarm während dem Justieren unbedingt gedrückt gehalten werden. Vergewissern Sie sich daß der Sechskantkopf in den Tonarmliftarm zurückkehrt wenn dieser losgelassen wird.

**Einstellung des Aufsetzpunktes und des Abschaltpunktes der Tonarm-Automatik**

Falls der Tonarm nicht an der korrekten Stelle abgesenkt oder abgehoben wird, so nehmen Sie die nötige Justierung auf folgende Weise vor:

**Einstellung des Tonarmaufsetzpunktes der Automatik** (Fig. 20)

1) Lassen Sie den Netzschalter in der OFF-Position (■), damit sich der Plattenteller nicht dreht.
2) Entfernen Sie die Gummikappe.

Falls der Aufsetzpunkt außerhalb der Platte liegt.

—Drehen Sie im Gegenuhrzeigersinn.

Falls der Aufsetzpunkt im Wiedergabteil der Schallplatte liegt.

—Drehen Sie im Uhrzeigersinn.

**Einstellung des Abschaltpunktes der Automatik** (Fig. 21)

1) Lassen Sie den Netzschalter in der OFF-Position (■), damit sich der Plattenteller nicht dreht.
2) Entfernen Sie die Gummikappe.
3) Führen Sie den Tonarm gegen die Plattentellerachse, und justieren Sie den Abschaltpunkt, indem Sie die Schraube stufenweise drehen.

Falls der Tonarm zu früh zurückkehrt.

—Drehen Sie im Gegenuhrzeigersinn.

Falls der Tonarm nach Erreichen der Auslaufrille nicht zurückkehrt.

—Drehen Sie im Uhrzeigersinn.

# ■ REGLAGES-1

**Réglage de la hauteur du brass** ( Voir Fig.s 16, 17)

- Ce bras de lecture a été bloqué à la position la plus élevée, avant d'être expédié de l'usine. Régler la hauteur du bras selon la hauteur de la cellule pick-up utiliseé.
- Desserrer la vis de blocage du bras et pousser le support à pivot du bras vers le bas, jusqu'à ce que le bras de lecture soit parallèle à la surface du disque.
- Si la hauteur de la cellule de lecture est de 18 mm, comme montré sur l'illustration, bloquer le support à pivot du bras à la ligne indiquée sur l'illustation. (Voir Fig. 17)
  La hauteur du bras peut être réglée par augmentation d'1 mm, sur une marge de 6 mm.

# ■ REGLAGES-2

**Commande d'écart (réglage précis de la vitesse du plateau).**

En utilisant la commande d'écart de synthétiseur à quartz employée pour la première fois au monde, un degré élevé de précision de la commande d'écart de vitesse pouvant aller au-delà d'une plege aussi étenduè que ±9,9% dans des incréments de 0,1%, peut être indépendamment obtenu, avec une précision élevée de la vitesse bloquée par le quartz. De plus, les variations d'écart qui sont clairement indiquées par l'indicateur numérique à diode électro-luminescente vous permettent d'obtenir une sélection facile et précise.

- La commande de vitesse peut être influencée dans des incréments de 0,1%, ce qui est bien au-dessous du seuil de la perception humaine. Cette fonction est très efficace pour une diminution ou une réduction mineure de la durée d'émission, telle que dans les stations de radiodiffusion.
- La commande de vitesse vous permet aussi d'accorder avec précision et exactitude les instruments musicaux et de varier légèrement l'écart pour l'obtention d'une tonalité musicale à partir de disques phono.
  Pour une demi-étape:
  +5,9% (#)
  −5,6% (b)
- Une autre caractéristique du régulateur de tonalité, réglable au-delà d'une plage étendue de ±9,9%, est qu'il permet de chanter pour accompagner la mélodie d'un choeur ou pour l'audition d'un disque en accompagnement seul.
  En appuyant sur le bouton de libération, qui est situé entre les boutons d'écarts "+" et "−", vous pouvez rapidement faire revenir l'appareil à une vitesse de lecture normale.

**Réglage de la hauteur de relevage du bras** (Voir Figs. 18 et 19).

La hauteur de relevage du bras (distance entre l'extrémité de la pointe de lecture et la surface du disque lorsque le levier de relevage du bras est soulevé) a été réglée en usine avant l'expédition, sur une valeur approximative de 10 mm (25/64").

Lorsque l'écart devient trop petit ou trop grand, à cause de la taille physique des diverses cellules que l'onpeut trouver sur le marché, tourner la vis de réglage dans le sens des aiguilles d'une montre ou en sens contraire, tout en poussant en même temps le souleveur du bras vers le bas.

Cet appareil utilise un "réglage d'amortissement" en combinaison avec le souleveur du bras, pour couper le bruit irritant provoqué lorsque la pointe de lecture est déposée ou soulevée du disque.

Vous pouvez régler la durée d'amortissement, en mettant au point la hauteur du souleveur du bras.

**Sens des aiguilles d'une montre**

—La distance entre la surface du disque et l'extrémité de la pointe de lecture diminue et la durée d'amortissement devient plus longue.

**Sens contraire des aiguilles d'une montre**

—La distance entre la surface du disque et l'extrémité de la pointe de lecture augmente et la durée d'amortissement devient plus courte.

**Nota:**

Comme la vis de réglage possède une tête hexagonale, s'assurer d'effectuer le réglage en appuyant sur le souleveur du bras et vérifier que la tête hexagonale se retire correctement dans le souleveur du bras quand il est libéré.

**Réglages pour les positions de démarrage automatique et de retour automatique.**

Dans le cas où le bras de lecture ne se déposerait pas ou ne se souléverait pas correctement, faire les mises au point nécessaires selon les procédures suivantes.

**Mise au point pour une position de marche automatique** (Voir Fig. 20)

1) Laisser l'interrupteur d'alimentation hors circuit (■), pour empêcher la rotation du plateau.
2) Retirer le capuchon en caoutchouc.

Dans le cas où la tête de la pointe de lecture s'abaisse en dehors du disque.

—Déplacer dans le sens contraire des aiguilles d'une montre.

Dans le cas où la tête de la pointe de lecture s'abaisse sur le sillon enregistré.

—Déplacer dans le sens des aiguilles d'une montre.

**Mise au point pour une position de retour automatique** (Voir Fig. 21).

1) Laisser l'interrupteur d'alimentation hors circuit (■), pour empêcher la rotation du plateau.
2) Retirer le capuchon en caiutchouc.
3) Déplacer le bras de lecture vers le côté du pivot central et faire la mise au point en tournant graduellement la vis de réglage.

Dans le cas où le bras de lecture tend à revenir avant que l'audition ne soit terminée.

—Déplacer dans le sens contraire des aiguilles d'une montre.

—Déplacer dans le sens des aiguilles d'une montre.

Dans le cas où le bras de lecture ne peut revenir en arrière, une fois achevé le dernier sillon du disque.

# ■ ADJUSTMENTS-3

### Adjustment Points of Electrical System

**NOTE:** Make the following adjustments after replacing parts such as IC's, transistors, diodes, etc.

| | Adjustment | Connection Points | Adjustment Point | Adjustment Method |
|---|---|---|---|---|
| A | Adjustment of standard voltage (VS) | DC voltmeter or Oscilloscope<br>⊕→TP15<br>⊖→GROUND | **VR201** | Turn start switch on to begin turntable rotation.<br>For 33 rpm . . . adjust VR201 for DC 2.10V ±0.05V.<br>For 45 rpm . . . confirm that there is DC 2.80 ~ 2.86V. |
| B | Adjustment of current source (IR) | DC voltmeter or Oscilloscope<br>⊕→TP19<br>⊖→TP21 | **VR202** | Turn start switch on to begin turntable rotation.<br>Adjust VR202 for 0V potential difference of TP19 and TP21. |
| C | Tracking adjustment | Oscilloscope<br>⊕→TP18<br>⊖→GROUND | **VR101** | **TP18 waveform**<br> 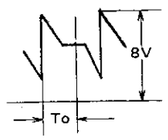 <br><br>For 33 rpm . . . adjust VR101 for $8 \leq To \leq 8.5$ ms.<br>For 45 rpm . . . confirm that $5.8 \leq To \leq 6.4$ ms. |
| D | Braking adjustment | —— | **VR203** | 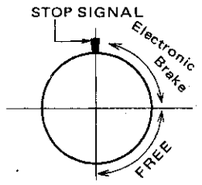 <br><br>Adjust VR203 for complete stop within 90° ~ 180° after stop signal initiated.<br>(Turntable becomes free a few seconds after stop.) |
| E | Optical sensor gain adjustment | Oscilloscope<br>⊕→TP32<br>⊖→GROUND | **VR501** | **TP32 waveform**<br> 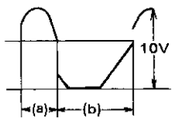 <br><br>With arm near center spindle, manually move with uniform motion, and adjust VR501 as that the (a) and (b) pitch of the waveform of TP32 is equal. |
| F | Auto-Return time adjustment | Oscilloscope<br>⊕→TP38<br>⊖→GROUND | **VR502** | **TP38 waveform**<br> 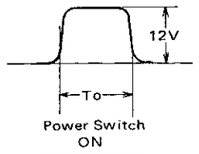 <br><br>Turn power switch on, and adjust VR502 so that the time (To) from power on until the voltage of TP38 inverts is 1.5 second at 33 rpm.<br>(1.1 second at 45 rpm)<br>TP37: for 33 rpm . . . 0V<br>for 45 rpm . . . 2V |



# ■ JUSTIERUNGEN-3

### Justierungspunkte des elektrischen Systems

Bemerkung: Nehmen Sie die folgenden Justierungen nach erfolgtem Austausch von Teilen, wie IC's, Transistoren, Dioden, usw. vor.

| | Justierung | Verbindungs-punkte | Justierungs-punkt | Justierungsmethode |
|---|---|---|---|---|
| A | Justierung der Nennspannung (VS) | Gleichstrom-Voltmeter oder Oszilloskop<br>⊕→TP15<br>⊖→GROUND | **VR201** | Start-Schalter drehen, um die Plattentellerdrehung zu starten.<br>Für 33 U/min . . . VR201 auf DC 2,10V ±0,05V abgleichen.<br>Für 45 U/min . . . Sicherstellen, da die Spannung 2,80 ~ 2,86V beträgt. |
| B | Justierung der Stromquelle (IR) | Gleichstrom-Voltmeter oder Oszilloskop<br>⊕→TP19<br>⊖→TP21 | **VR202** | Start-Schalter drehen, um die Plattentellerdrehung zu starten.<br>VR202 auf eine Spannungsdifferenz von 0V zwischen TP19 und TP21 justieren. |
| C | Abtast-Justierung | Oszilloskop<br>⊕→TP18<br>⊖→GROUND | **VR101** | **TP18 Wellenform**<br> 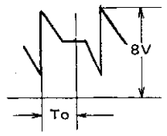 <br><br>Für 33 U/min . . . VR101 auf $8 \leq To \leq 8,5$ ms abgleichen.<br>Für 45 U/min . . . $5,8 \leq To \leq 6,4$ ms sicherstellen. |
| D | Brems-Justierung | —— | **VR203** | 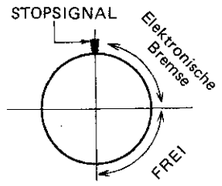 <br><br>VR203 für vollständigen Stop innerhalb 90° ~ 180° nach erfolgtem Stopsignal abgleichen.<br>(Plattenteller wird wenige Sekunden nach dem Stop freigestellt.) |
| E | Verstärkungs-Justierung des optischen Sensors | Oszilloskop<br>⊕→TP32<br>⊖→GROUND | **VR501** | **TP32 Wellenform**<br> 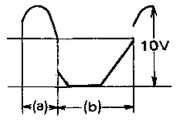 <br><br>Mit dem Tonarm nahe der Plattentellerachse, ihn von Hand gleichmäßig bewegen und VR501 so justieren, daß Kurven(a) und (b) der Wellenform TP32 gleich werden. |
| F | Justierung der Auto-Rückkehrzeit | Oszilloskop<br>⊕→TP38<br>⊖→GROUND | **VR502** | **TP38 Wellenform**<br> 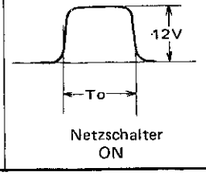 <br><br>Netzschalter einschalten, und VR502 so justieren, daß die Zeit (To) vom Einschalten des Stroms bis zur Umkehr der Spannung von TP38 bei 33 U/min 1,5 sec. beträgt. (1,1 sec bei 45 U/min)<br>TP37: für 33 U/min . . . 0V<br>für 45 U/min . . . 2V |

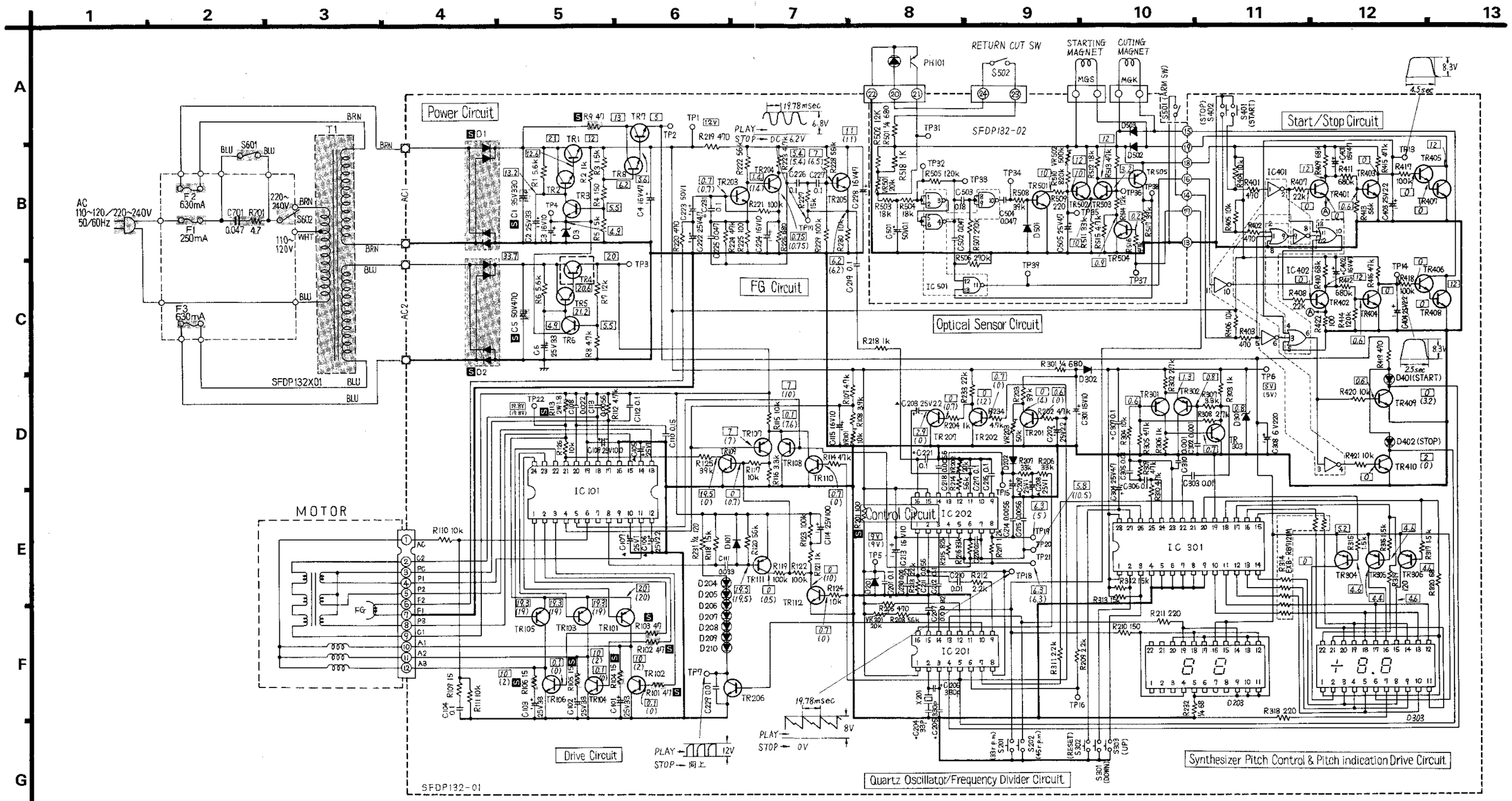


## ■ TERMINAL GUIDE

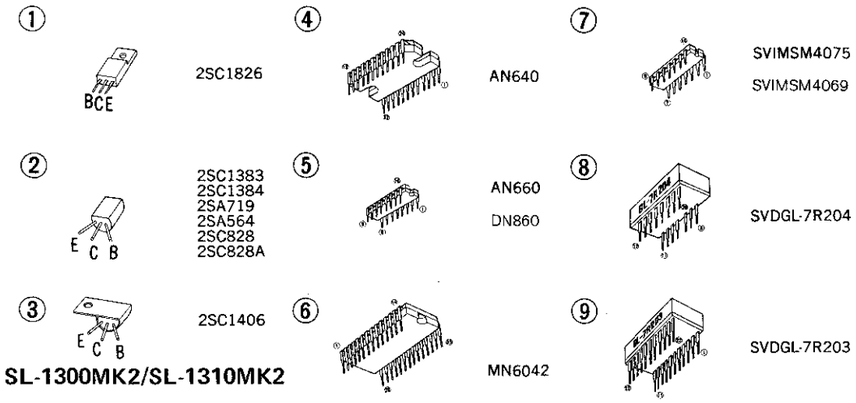




**IMPORTANT SAFETY NOTICE**

THE SHADED AREA ON THIS SCHEMATIC DIAGRAM INCORPORATES SPECIAL FEATURES IMPORTANT FOR SAFETY.
WHEN SERVICING IT IS ESSENTIAL THAT ONLY MANUFACTUR'S SPECIFIED PARTS BE USED FOR THE CRITICAL COMPONENTS IN THE SHADED AREAS OF THE SCHEMATIC.

**Notes:**

1. **S201:** Speed select switch (33 r.p.m.)
2. **S202:** Speed select switch (45 r.p.m.)
3. **S301:** Pitch Control switch (Down)
4. **S302:** Pitch Control switch (Reset)
5. **S303:** Pitch Control switch (Up)
6. **S401:** Start switch in "**off**" position.
7. **S402:** Stop switch in "**off**" position.
8. **S501:** Arm switch in "**off**" position.
9. **S502:** Return cut switch in "**off**" position.
10. **S601:** Power switch in "**off**" position.
11. The voltage values entered are the values measured from the chassis with a standard tester that has an internal resistance of 100KΩ/V.

| | | | |
|---|---|---|---|
| TR1, 4, 7 | 2SC1826 | IC101 | AN640 |
| TR2, 3, 6, 8, 405, 406 | 2SC1328-T | IC201 | DN860 |
| | | IC202 | AN660 |
| TR5 | 2SC1384 | IC301 | MN6042 |
| TR102, 104, 106 | 2SC1406 | IC401 | SVIMSM4069 |
| TR101, 103, 105 | 2SA752 | IC402 | SVIMSM4075 |
| TR107, 107, 111 | 2SA666AI-R | IC501 | SVIMSM4011 |
| 301, 302, 505 | | D1, 2 | SVDSIRBA20 |
| TR109, 110, 112, | 2SC1328-T | D3, 301 | SVDRD5.1EBS |
| 201 ~ 207, 303 | | D101, 202, 302, | MA150 |
| 401 ~ 404, 409, | | 501 ~ 503 | |
| 410, 501 ~ 504 | | D201 | SVDRD9.1EBS |
| TR304 ~ 306 | 2SA719 | D203 | SVDGL-7R204 |
| TR407, 408 | 2SC1384 | D204 ~ 210 | SVDSR105C |
| | | D303 | SVDGL-7R203 |
| | | D401, 402 | SVDSR105C |

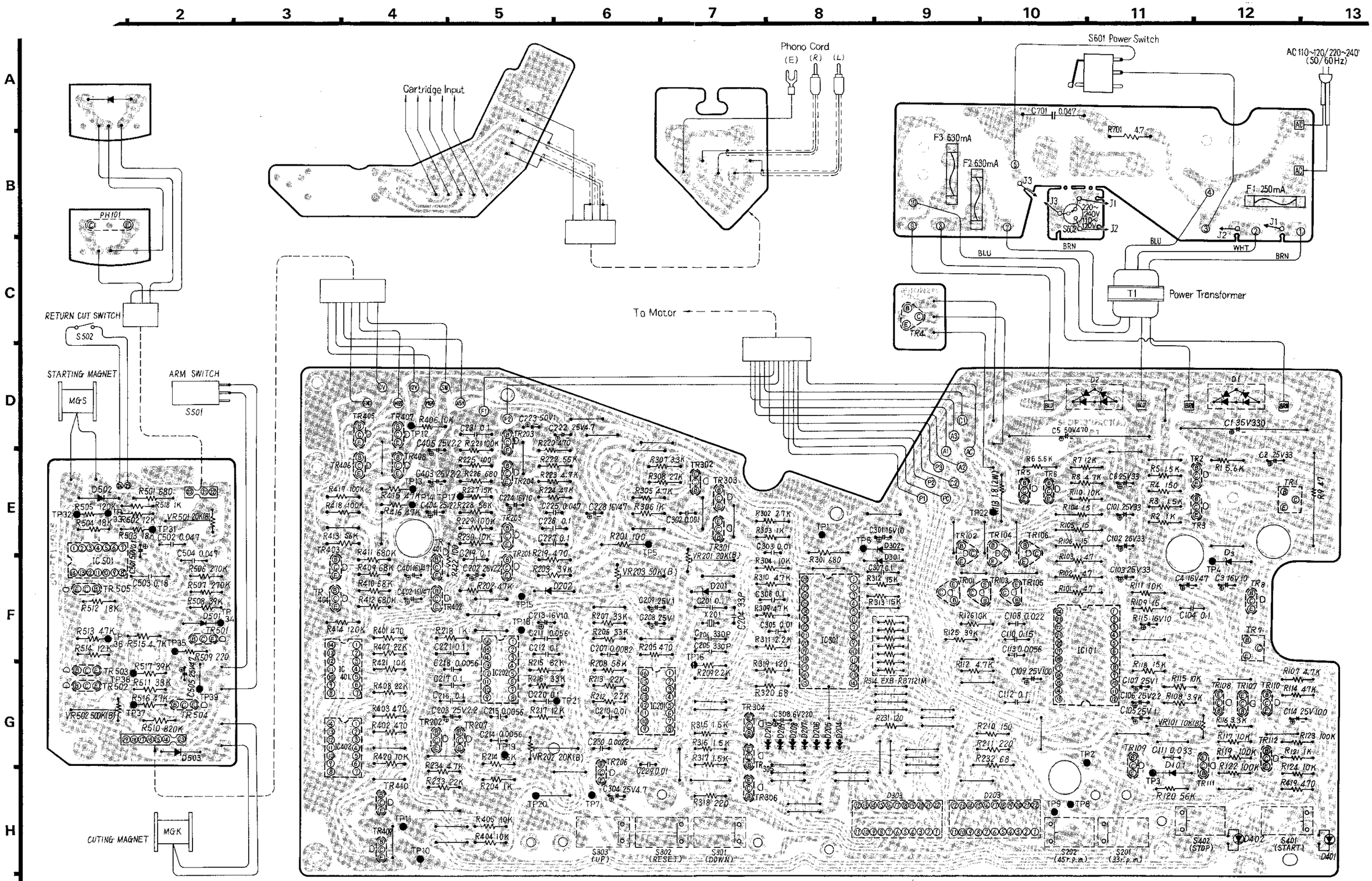


| | TR1 | TR2 | TR3 | TR4 | TR5 | TR6 | TR7 | TR8 | TR101 | TR102 | TR103 | TR104 | TR105 | TR106 | TR107 | TR108 | TR109 | TR110 | TR111 | TR112 | TR201 | TR202 | TR203 | TR204 |
|---|---|---|---|---|---|---|---|---|---|---|---|---|---|---|---|---|---|---|---|---|---|---|---|---|
| | 2SC1826 | 2SC828A | 2SC828A | 2SC1826 | 2SC1383 | 2SC828A | 2SC1826 | 2SC828A | 2SA751 | 2SC1406 | 2SA751 | 2SC1406 | 2SA751 | 2SC1406 | 2SA564 | 2SA564 | 2SC828 | 2SC828 | 2SA564 | 2SC828 | 2SC828 | 2SC828 | 2SC828 | 2SC828 |
| E | 12 V | 12.6 V | 4.9 V | 20 V | 20.6 V | 4.9 V | 5 V | 5.6 V | 20 V | 0 V | 20 V | 0 V | 20 V | 0 V | 0.1 V | 0.1 V | 0 V | 0 V | 20 V | 0 V | 0 V | 0 V | 0 V | 0.75 V |
| C | 21 V | 13.2 V | 13.2 V | 33.7 V | 33.7 V | 21.2 V | 13 V | 13 V | 10 V | 10 V | 10 V | 10 V | 10 V | 10 V | 0 V | 0 V | 19.5 V | 0 V | 19.5 V | 0 V | 0 V | 0 V | 1.4 V | 5.4 V |
| B | 12.6 V | 13.2 V | 5.5 V | 20.6 V | 21.2 V | 5.5 V | 5.6 V | 6.2 V | 19.3 V | 0.1 V | 19.3 V | 0.1 V | 19.3 V | 0.1 V | 7 V | 7 V | 0 V | 0.7 V | 19.5 V | 0.7 V | 0.6 V | 0.7 V | 0.7 V | 1.4 V |

| | TR205 | TR206 | TR207 | TR301 | TR302 | TR303 | TR304 | TR305 | TR306 | TR401 | TR402 | TR403 | TR404 | TR405 | TR406 | TR407 | TR408 | TR409 | TR410 | TR501 | TR502 | TR503 | TR504 | TR505 |
|---|---|---|---|---|---|---|---|---|---|---|---|---|---|---|---|---|---|---|---|---|---|---|---|---|
| | 2SC828 | 2SC828 | 2SC828 | 2SA564 | 2SA564 | 2SC828 | 2SA719 | 2SA719 | 2SA719 | 2SC828 | 2SC828 | 2SC828 | 2SC828 | 2SC828A | 2SC828A | 2SC1384 | 2SC1384 | 2SC828 | 2SC828 | 2SC828 | 2SC828 | 2SC828 | 2SC828 | 2SA564 |
| E | 6.2 V | | 0 V | 7.3 V | 7.3 V | 0 V | 5.2 V | 5.2 V | 5.2 V | 0 V | 0 V | 0 V | 0 V | 0 V | 6 V | 0 V | 0 V | 0 V | 0 V | 0 V | 10 V | 10 V | 0 V | 0 V |
| C | 11 V | | 2.9 V | 0 V | 0 V | 0.8 V | 0 V | 4.4 V | 4.4 V | 12 V | 12 V | 0.6 V | 0.6 V | 12 V | 12 V | 12 V | 12 V | 0.6 V | 0 V | 0 V | 12 V | 12 V | 0.9 V | 12 V |
| B | 7 V | | 0 V | 0.6 V | 0.8 V | 0.7 V | 4.6 V | 4.6 V | 4.6 V | 0 V | 0 V | | | 0 V | 0 V | 0 V | 0 V | 0.6 V | 0 V | 0 V | 10 V | 32 V | 0.2 V | 12 V |

## ■ BLOCK DIAGRAM

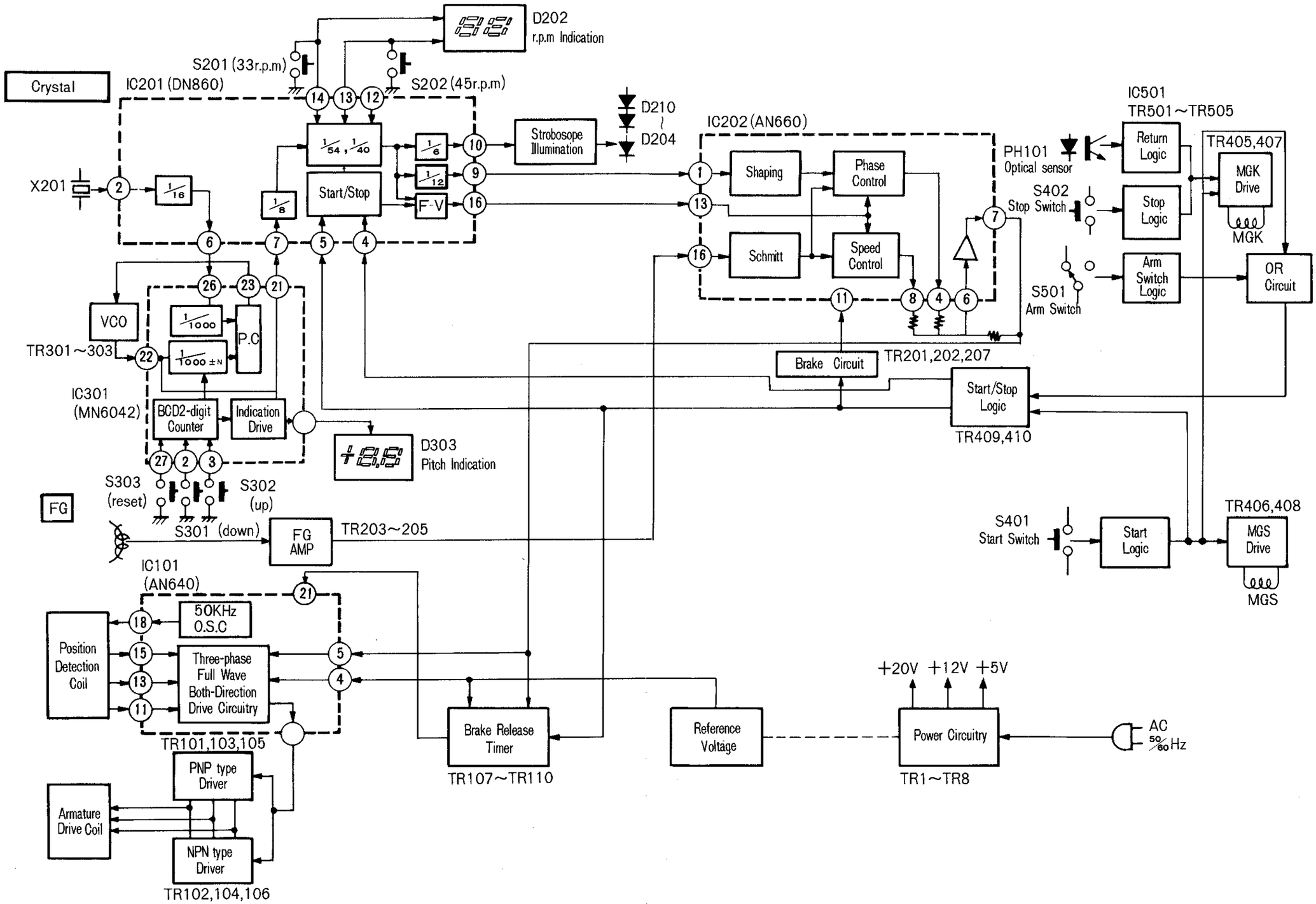

# ■ REGLAGES-3

**Points de réglage du système électrique.**

NOTA: Réaliser les mises au point suivantes après le remplacement de certains éléments tels que circuits intégrés, transistors, diodes, etc.

| | Réglage | Points de branchements | Point de réglage | Méthode de réglage |
|---|---|---|---|---|
| A | Réglage de la tension normalisée (VS) | Voltmètre à CC ou Oscilloscope.<br>⊕ → TP15<br>⊖ → GROUND | **VR201** | Ouvrir le commutateur de marche pour le démarrage rotationnel du plateau.<br>Pour 33 t/m . . . régler VR201 pour CC 2,10V ±0,05V.<br>Pour 45 t/m . . . s'assurer qu'il y a un CC 2,80 – 2,86V. |
| B | Réglage de la source de courant (IR) | Voltmètre à CC ou Oscilloscope.<br>⊕ → TP19<br>⊖ → TP21 | **VR202** | Ouvrir le commutateur de marche pour le démarrage rotationnel du plateau.<br>Régler VR202 pour une différence potentielle 0V de TP19 et TP21. |
| C | Réglage d'alignement | Oscilloscope<br>⊕ → TP18<br>⊖ →GROUND | **VR101** | **Forme d'onde TP18**<br>8V, To<br>Pour 33 t/m . . . régler VR101 pour $8 \leq To \leq 8,5$ ms.<br>Pour 45 t/m . . . s'assurer que $5,8 \leq To \leq 6,4$ ms. |
| D | Réglage du freinage | ——— | **VR203** | Signal d'arrêt<br>Frein électronique<br>Mouvement libre<br>Régler VR203 pour un arrêt total en deçà de 90° – 180° après que le signal d'arrêt ait débuté.<br>(Le plateau deviendra libre quelques secondes après l'arrêt). |
| E | Réglage du gain du capteur optique | Oscilloscope<br>⊕ → TP32<br>⊖ →GROUND | **VR501** | **Forme d'onde TP32**<br>10V, (a), (b)<br>Avec le bras près du pivot central, déplacer manuellement d'un mouvement uniforme et régler VR501 de façon à ce que l'ecart (a) et (b) de la forme d'onde de TP32 devienne égal. |
| F | Réglage de la durée de retour automatique | Oscilloscope<br>⊕ → TP38<br>⊖ →GROUND | **VR502** | **Forme d'onde TP38**<br>12V, To<br>Intempteur d'alimentation en marche.<br>Mettre en marche l'interrupteur d'alimentation et régler VR502 de facon à ce que la durée (To) de puissance en marche sous la tension de TP38 s'invertisse en 1,5 seconde à 33 t/m. (1,1 seconde à 45 t/m)<br>TP37: pour 33 t/m . . . 0V.<br>pour 45 t/m . . . 2V. |



# ■ TROUBLE SHOOTING

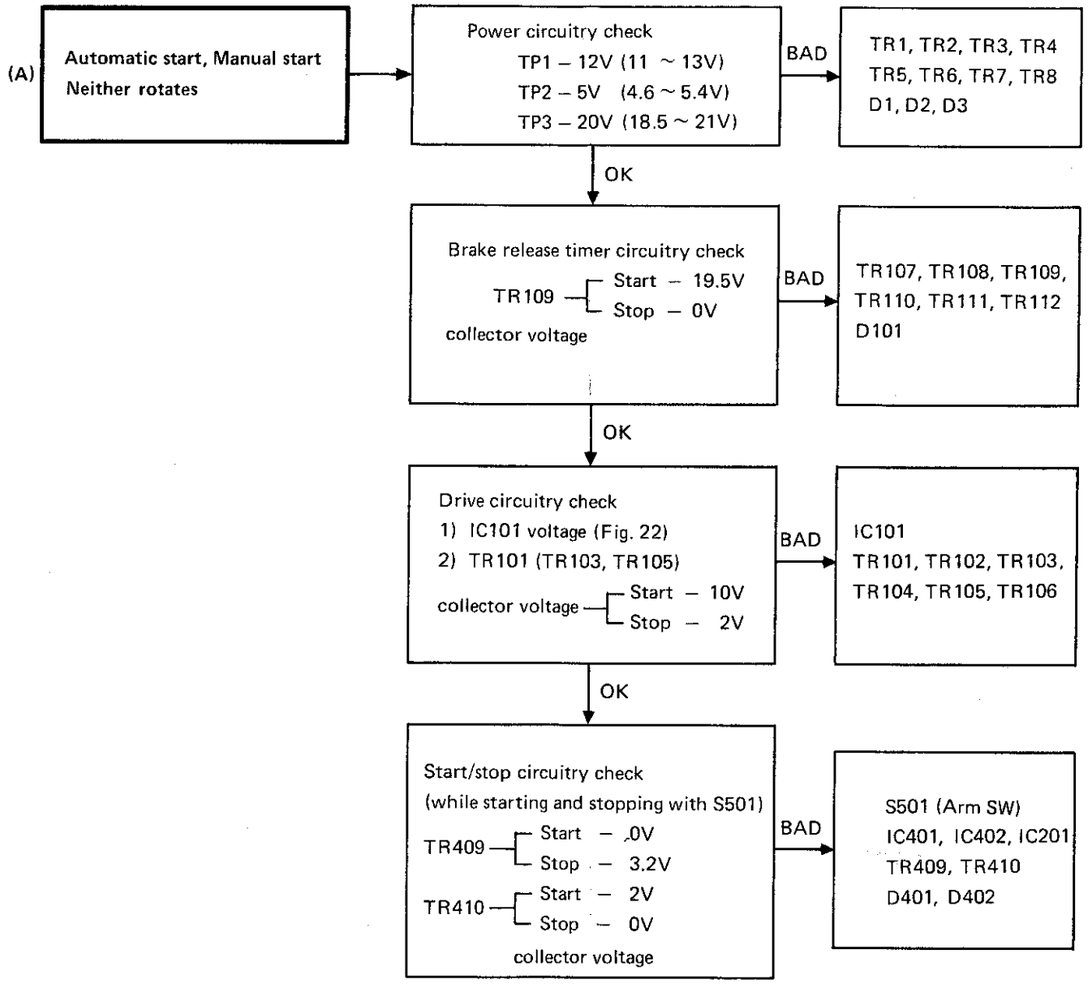


Reference voltage of each pin of IC101

(Fig. 22)

| | Start | Stop | | Start | Stop | | Start | Stop |
|---|---|---|---|---|---|---|---|---|
| ①②③ | 0.8V | 0.1V | ⑩ | 14.5V | 15.2V | ⑰ | 15.5V | 15.5V |
| ④ | 5.8V | 6.1V | ⑪⑬⑮ | 20ms, 15.6V | Same as at left | ⑱ | 20ms, 20V | Same as at left |
| ⑤ | 5.9V | 10.5V | | | | ⑲ | 20.6V | 20.6V |
| ⑥ | 4.7V | 2.2V | ⑫ | 14.9V | 15V | ⑳ | 15.3V | 1.4V |
| ⑦ | 4.9V | 4.9V | | | | ㉑ | 20.5V | 16.4V |
| ⑧ | 20.5V | 20.5V | ⑭ | 14.9V | 15V | ㉒㉓㉔ | 20V | 20V |
| ⑨ | 5V | 0.2V | ⑯ | 0V | 0V | | | |

**(B) No rotation when automatic start (manual start OK)**

→ MGS drive circuitry check. When S401 (start switch) is ON, does voltage of about 8V appear at TP13

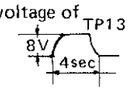


BAD → S401, TR401, TR403, TR405, TR407, IC401, D502, MGS

OK ↓

MGK drive circuitry check. When S401 (start switch) is ON, does voltage of about 8V appear at TP14.

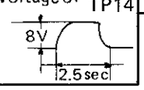


BAD → IC401, IC402, TR402, TR404, TR406, TR408, D503, MGK

OK ↓

Mechanism operation check at time of start when MGS functions, solenoid support plate (Ref. 55) held → Direction of arm movement determined
When MGK functions, Main gear support plate (Ref. 51) pushed → Main gear rotates

**(C) Neither Auto Return nor Auto Stop functions**

→ MGK drive circuitry check when S402 (stop switch) is ON, does voltage of about 8V appear at TP14

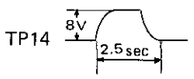


BAD → S402, IC401, IC402

**(D) No Auto Return...[Auto Return switch on] (Auto Stop OK)**

→ Optical sensor circuitry (while moving with arm at return position)

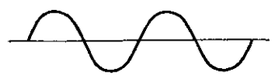


BAD → PH101

OK ↓

BAD → IC501, TR501, D501

OK ↓

TP37 — 33 rpm – 0.2V, 45 rpm – 3.5V

BAD → IC501, TR502, TR503, TR504, TR505



**(E) Runaway operation**

→ FG circuitry check

T — 33 rpm – 20 ms, 45 rpm – 15 ms

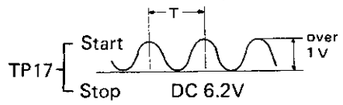


BAD → TR203, TR204, TR205

OK ↓

Control circuitry check
1) IC202 voltage (Fig. 23)
2) TR201, TR202, TR207 collector voltage

TR201 — Start – 0V, Stop – 4V
TR202 — Start – 0V, Stop – 1V
TR207 — Start – 2.5V, Stop – 0V

BAD → IC202, TR201, TR202, TR207, D202

Reference voltage of each pin of IC202
(Fig. 23)

| | Start | Stop | | Start | Stop | | Start | Stop |
|---|---|---|---|---|---|---|---|---|
| ① | 20ms, 4.6V | 0 V | ⑥ | 6.3V | 6.3V | ⑫ | 2.1V | 2.7V |
| ② | Same at TP18 | 0 V | ⑦ | 5.8V | 10.5V | ⑬ | 2.1V | 2.7V |
| ③ | 20ms, 4.8V | 6.1V | ⑧ | 6.3V | 5.0V | ⑭ | 20ms, 8V | 7.5V |
| ④ | 6.6V | 6.2V | ⑨ | 20ms, 6.2V | 7.1V | ⑮ | 11.7V | 11.7V |
| ⑤ | 11.7V | 11.7V | ⑩ | 0 V | 0 V | ⑯ | 20ms, 6.2V | 5.5V |
| | | | ⑪ | 20ms, 7V | 7.5V | | | |

**(F) 33-45 rpm Changeover malfunction**

→ Speed-set circuitry check IC201 ⑬ ⑭ pin voltage

⑬ — 33 rpm – 3.5V, 45 rpm – 0.2V
⑭ — 33 rpm – 0.2V, 45 rpm – 3.5V

BAD → IC201 D203, S201, S202

(G)

**Pitch control malfunction**
**Stroboscope synchronization malfunction**
→ Quartz-crystal oscillation power check TP5 – 9V (8.5 ~ 9.5V) — BAD → D201
↓ OK
VCO power check TP6 – 5V (4.6 ~ 5.4V) — BAD → D301, D302
↓ OK
Quartz-crystal oscillation circuitry check
1) TP16 38μS 4.2V
2) IC201 voltage (Fig. 24)
— BAD → X201, IC201
↓ OK
Pitch control circuitry check
1) IC201 ⑦ pin 38μS 4.5V
2) IC301 voltage (Fig. 25)
— BAD → IC301, TR301, TR302, TR303, TR304, TR305, TR306, D303

Reference voltage of each pin of IC201 **(Fig. 24)**

| | Start | Stop | | Start | Stop | | Start | Stop |
|---|---|---|---|---|---|---|---|---|
| ① | 9.4V | 9.4V | ⑦ | 3.8μs, 4.5V | Same as at left | ⑪ | 0 V | 0 V |
| ② | 0.24μs, 1.8V | Same as at left | | | | ⑫ | 6 V | 6 V |
| ③ | 0.24μs, 0.9V | Same as at left | ⑧ | 20ms, 8V | 0 V | ⑬ | 3.5V | Same as at left |
| ④ | 0 V | 3.2V | ⑨ | 20ms, 4.2V | 4.3V | ⑭ | 0.2V | 0.2V |
| ⑤ | 2.0V | 0 V | | | | ⑮ | 7V | Same as at left |
| ⑥ | 3.8μs, 4.2V | Same as at left | ⑩ | 10ms, 1V | Same as at left | ⑯ | 20ms, 7V | 0 V |

Reference voltage of each pin of IC301 **(Fig. 25)**

| | Start | Stop | | Start | Stop | | Start | Stop |
|---|---|---|---|---|---|---|---|---|
| ① ② ③ | 4.9V | 4.9V | ⑰ ⑱ | 4ms, 4.8V | Same as at left | ㉓ | 2.4V | Same as at left |
| | | | | | | ㉔ | 2.4V | Same as at left |
| ④⑧ ⑤⑨ ⑥⑩ ⑦ | 0 V | 0 V | ⑳ | 2ms, 4.6V | Same as at left | ㉕ | 4ms, 5V | Same as at left |
| ⑩⑬ ⑪⑭ ⑫⑮ | 3.5ms, 4V | Same as at left | ㉑ | 3.8μs, 5.9V | Same as at left | ㉖ | 3.8μs, 4.2V | Same as at left |
| ⑯ | 3.5ms, 4.2V | Same as at left | ㉒ | 3.8μs, 6V | Same as at left | ㉗ | 5 V | 5 V |
| | | | | | | ㉘ | 5 V | 5 V |



# ■ REPLACEMENT PARTS LIST

**Importand Safety No. ce**
Components identified by shaded area have special characteristics impor at for safety. When replacing any of these components use only manufacturer's specified parts.

NOTE: 1. Part numbers are indicated on most mechanical parts.
Please use this part number for parts orders.
2. SL-1300 MK2A(X) → [X]  SL-1300MK2(E) → [E]  SL-1300MK2(XAL) → [XAL]  SL-1300MK2(XG) → [XG]  SL-1300MK2(XGF) → [XGF]  SL-1310MK2(E) → [10E]  SL-1310MK2(XG) → [10XG]  SL-1300MK2A(E) → [AE]  SL-1310MK2A(XG) → [10AXG]  SL-1310MK2A(E) → [10AE]

| Ref. No. | Part No. | Part Name & Description | Per Set | Remarks |
|---|---|---|---|---|
| **INTEGRATED CIRCUITS** | | | | |
| IC101 | AN640 | Drive Circuit | 1 | |
| IC201 | DN860 | Frequency Divider Circuit | 1 | ○ |
| IC202 | AN660 | Control Circuit | 1 | ○ |
| IC301 | MN6042 | Pitch Control Circuit | 1 | ○ |
| IC401 | SVIMSM4069 | Start & Stop Logic Circuit (NOT) | 1 | ○ |
| IC402 | SVIMSM4075 | Start & Stop Logic Circuit (OR) | 1 | ○ |
| IC501 | SVIMSM4011 | Optical Censor Return Pulse Circuit (NAND) | 1 | ○ |
| **TRANSISTORS** | | | | |
| TR1, 4, 7 | **2SC1826-Y** | Transistors (Use in ranks O or Y or G) | 3 | ○ |
| TR2, 3, 6, 8, 405, 406 | **2SC1328-T** | Transistors | 6 | |
| TR5 | **2SC1384A-Q** | Transistor (Use in ranks Q or R or S) | 1 | |
| TR101 | **2SA752-Q** | Transistor **(Use in pair ranks Q or R or S)** | 1 | |
| TR102 | **2SC1406-Q** | Transistor | 1 | |
| TR103 | **2SA752-Q** | Transistor **(Use in pair ranks Q or R or S)** | 1 | |
| TR104 | **2SC1406-Q** | Transistor | 1 | |
| TR105 | **2SA752-Q** | Transistor **(Use in pair ranks Q or R or S)** | 1 | |
| TR106 | **2SC1406-Q** | Transistor | 1 | |
| TR107, 108, 111, 301, 302, 505 | **2SA666AI-R** | Transistor (Use in ranks Q or R or S) | 6 | |
| TR109, 110, 112, 201, 202, 203, 204, 205, 206, 207, 303, 401, 402, 403, 404, 409, 410, 501, 502, 503, 504 | **2SC1328-T** | Transistor | 21 | |
| TR304, 305, 306 | **2SA719-P** | Transistors (Use in ranks P or Q or R or S) | 3 | ○ |
| TR407, 408 | **2SC1384-Q** | Transistors (Use in ranks Q or R or S) | 2 | |
| **DIODES** | | | | |
| D1, 2 | SVDSIRBA20 | Rectifier | 2 | ○ |
| D3, 301 | SVDRD5.1EBS | 5.1V Zener, Voltage Stabilizer | 2 | ○ |
| D101, 202, 302, 501, 502, 503 | MA150 | Diodes | 6 | |
| D201 | SVDRD9.1EBS | 9.1V Zener, Voltage Stabilizer | 1 | |
| D203 | SVDGL-7R204 | Light Emitting Diode (r.p.m) | 1 | ○ |
| D204, 205, 206, 207, 208, 209, 210, 401, 402 | SVDSR105C | Light Emitting Diode | 9 | ○ |
| D303 | SVDGL-7R203 | Light Emitting Diode (pitch) | 1 | ○ |
| **CRYSTAL** | | | | |
| X204 | SVQU306115 | 4.19328MHz Oscillater | 1 | ○ |
| **TRANSFORMER** | | | | |
| T1 | SLTF5353 | Power Transformer | 1 | ○ |
| **FUSE** | | | | |
| F1 | XBA2C025TR0 | 250mA (Fuse) | 1 | |
| F2, 3 | XBA2C06TR0 | 630mA (Fuse) | 2 | ○ |

| Ref. No. | Part No. | Part Name & Description | Per Set | Remarks |
|---|---|---|---|---|
| **SWITCHES** | | | | |
| S201, 202 | EVQP4R04K | Speed Selector Switches | 2 | ○ |
| S301, 302, 303 | EVQP4R04K | Pitch Control Switches | 3 | ○ |
| S401, 402 | EVQP4R04K | Start or Stop Switches | 2 | ○ |
| S501 | SFDSAH73502 | Arm Switch | 1 | |
| S502 | ESB6015 | Return Cut Switch | 1 | |
| S601 | SFDSS5GL2S (?) | Power Switch | 1 | ○ |
| S602 | SFDSHXW13312 | Switch, Power Source | 1 | |
| | SFDSHSW0634 | Muting Switch, Tone Arm | 1 | ○ |
| **RESISTORS** | | | | |
| R1 | **ERD25TJ562** | Carbon, 5.6kΩ, 1/4W, ± 5% | 1 | |
| R2 | **ERD25TJ102** | Carbon, 1kΩ, 1/4W, ± 5% | 1 | |
| R3 | **ERD25TJ152** | Carbon, 1.5kΩ, 1/4W, ± 5% | 1 | |
| R4 | **ERD25TJ151** | Carbon, 150Ω, 1/4W, ± 5% | 1 | |
| R5 | **ERD25TJ152** | Carbon, 1.5kΩ, 1/4W, ± 5% | 1 | |
| R6 | **ERD25TJ562** | Carbon, 5.6kΩ, 1/4W, ± 5% | 1 | |
| R7 | **ERD25TJ123** | Carbon, 12kΩ, 1/4W, ± 5% | 1 | |
| R8 | **ERD25TJ472** | Carbon, 4.7kΩ, 1/4W, ± 5% | 1 | |
| R9 | **ERG3ANJ470** | Metal Film, 47Ω, 3W, ± 5% | 1 | |
| R101, 102, 103 | **ERX1ANJ470** | Metal Film, 47Ω, 1W, ± 5% | 3 | |
| R104, 105, 106 | **ERX1ANJ150** | Metal Film, 15Ω, 1W, ± 5% | 3 | |
| R107 | **ERD25TJ472** | Carbon, 4.7kΩ, 1/4W, ± 5% | 1 | |
| R108 | **ERD25TJ392** | Carbon, 3.9kΩ, 1/4W, ± 5% | 1 | |
| R109 | **ERD25TJ150** | Carbon, 15Ω, 1/4W, ± 5% | 1 | |
| R110, 111 | **ERD25TJ103** | Carbon, 10kΩ, 1/4W, ± 5% | 2 | |
| R112 | **ERD25TJ472** | Carbon, 4.7kΩ, 1/4W, ± 5% | 1 | |
| R113 | **ERX1ANJ1R8** | Metal Film, 1.8Ω, 1W, ± 5% | 1 | |
| R114 | **ERD25TJ473** | Carbon, 47kΩ, 1/4W, ± 5% | 1 | |
| R115 | **ERD25TJ103** | Carbon, 10kΩ, 1/4W, ± 5% | 1 | |
| R116 | **ERD25TJ332** | Carbon, 3.3kΩ, 1/4W, ± 5% | 1 | |
| R117 | **ERD25TJ103** | Carbon, 10kΩ, 1/4W, ± 5% | 1 | |
| R118 | **ERD25TJ153** | Carbon, 15kΩ, 1/4W, ± 5% | 1 | |
| R119 | **ERD25TJ104** | Carbon, 100kΩ, 1/4W, ± 5% | 1 | |
| R120 | **ERD25TJ563** | Carbon, 56kΩ, 1/4W, ± 5% | 1 | |
| R121 | **ERD25TJ102** | Carbon, 1kΩ, 1/4W, ± 5% | 1 | |
| R122, 123 | **ERD25TJ104** | Carbon, 100kΩ, 1/4W, ± 5% | 2 | |
| R124 | **ERD25TJ103** | Carbon, 10kΩ, 1/4W, ± 5% | 1 | |
| R125 | **ERD25TJ393** | Carbon, 39kΩ, 1/4W, ± 5% | 1 | |
| R126 | **ERD25TJ103** | Carbon, 10kΩ, 1/4W, ± 5% | 1 | |
| R201 | **ERX1ANJ101** | Metal Film, 100Ω, 1W, ± 5% | 1 | |
| R202 | **ERD25TJ473** | Carbon, 47kΩ, 1/4W, ± 5% | 1 | |
| R203 | **ERD25TJ393** | Carbon, 39kΩ, 1/4W, ± 5% | 1 | |
| R204 | **ERD25TJ102** | Carbon, 1kΩ, 1/4W, ± 5% | 1 | |
| R205 | **ERD25TJ471** | Carbon, 470Ω, 1/4W, ± 5% | 1 | |
| R206, 207 | **ERD25TJ333** | Carbon, 33kΩ, 1/4W, ± 5% | 2 | |
| R208 | **ERD25TJ563** | Carbon, 56kΩ, 1/4W, ± 5% | 1 | |
| R209 | **ERD25TJ222** | Carbon, 2.2kΩ, 1/4W, ± 5% | 1 | |
| R210 | **ERD25TJ151** | Carbon, 150Ω, 1/4W, ± 5% | 1 | |
| R211 | **ERD25TJ221** | Carbon, 220Ω, 1/4W, ± 5% | 1 | |
| R212 | **ERD25TJ222** | Carbon, 2.2kΩ, 1/4W, ± 5% | 1 | |
| R213 | **ERD25TJ223** | Carbon, 22kΩ, 1/4W, ± 5% | 1 | |
| R214 | **ERD25TJ563** | Carbon, 56kΩ, 1/4W, ± 5% | 1 | |
| R215 | **ERD25TJ823** | Carbon, 82kΩ, 1/4W, ± 5% | 1 | |
| R216 | **ERD25TJ333** | Carbon, 33kΩ, 1/4W, ± 5% | 1 | |
| R217 | **ERD25TJ123** | Carbon, 12kΩ, 1/4W, ± 5% | 1 | |
| R218 | **ERD25TJ102** | Carbon, 1kΩ, 1/4W, ± 5% | 1 | |
| R219, 220 | **ERD25TJ471** | Carbon, 470Ω, 1/4W, ± 5% | 2 | |
| R221 | **ERD25TJ104** | Carbon, 100kΩ, 1/4W, ± 5% | 1 | |
| R222 | **ERD25TJ563** | Carbon, 56kΩ, 1/4W, ± 5% | 1 | |
| R223 | **ERD25TJ472** | Carbon, 4.7kΩ, 1/4W, ± 5% | 1 | |



| Ref. No. | Part No. | Part Name & Description | Per Set | Remarks |
|---|---|---|---|---|

| Ref. No. | Part No. | Part Name & Description | Per Set | Remarks |
|---|---|---|---|---|
| **VARIABLE RESISTORS** | | | | |

| | | | |
|---|---|---|---|
| 5 V | Same as at left | Same as at left | Stop |
| 5 V | Same as at left | Same as at left | Same as at left |

| | | | |
|---|---|---|---|
| 0 V | Same as at left | 0.2V | Same as at left |
| 6 V | 0 V | Stop | |

01
01,TR302,TR303
04,TR305,TR306
3

X201
IC201

D301, D302

D201

# ■ REPLACEMENT PARTS LIST

**Important Safety Notice**

Components identified by shaded area have special characteristics important for safety. When replacing any of these components use only manufacturer's specified parts.

NOTE: 1. Part numbers are indicated on most mechanical parts. Please use this part number for parts orders.
2. SL-1300 MK2A(X) ⟶ [X] SL-1300MK2(XG) ⟶ [XG] SL-1310MK2(XG) ⟶ [10XG]
SL-1300MK2(E) ⟶ [E] SL-1300MK2(XGF) ⟶ [XGF] SL-1300MK2A(E) ⟶ [AE]
SL-1300MK2(XAL) ⟶ [XAL] SL-1310MK2(E) ⟶ [10E] SL-1310MK2A(XG) ⟶ [10AXG]
SL-1310MK2A(E) ⟶ [10AE]

| Ref. No. | Part No. | Part Name & Description | Per Set | Remarks |
|---|---|---|---|---|
| | | **INTEGRATED CIRCUITS** | | |
| IC101 | AN640 | Drive Circuit | 1 | |
| IC201 | DN860 | Frequency Divider Circuit | 1 | ○ |
| IC202 | AN660 | Control Circuit | 1 | ○ |
| IC301 | MN6042 | Pitch Control Circuit | 1 | ○ |
| IC401 | SVIMSM4069 | Start & Stop Logic Circuit (NOT) | 1 | ○ |
| IC402 | SVIMSM4075 | Start & Stop Logic Circuit (OR) | 1 | ○ |
| IC501 | SVIMSM4011 | Optical Censor Return Pulse Circuit (NAND) | 1 | ○ |
| | | **TRANSISTORS** | | |
| TR1, 4, 7 | **2SC1826-Y** | Transistors (Use in ranks O or Y or G) | 3 | ○ |
| TR2, 3, 6, 8, 405, 406 | **2SC1328-T** | Transistors | 6 | |
| TR5 | **2SC1384A-Q** | Transistor (Use in ranks Q or R or S) | 1 | |
| TR101 | **2SA752-Q** | Transistor (Use in pair ranks Q or R or S) | 1 | |
| TR102 | **2SC1406-Q** | Transistor | 1 | |
| TR103 | **2SA752-Q** | Transistor (Use in pair ranks Q or R or S) | 1 | |
| TR104 | **2SC1406-Q** | Transistor | 1 | |
| TR105 | **2SA752-Q** | Transistor (Use in pair ranks Q or R or S) | 1 | |
| TR106 | **2SC1406-Q** | Transistor | 1 | |
| TR107, 108, 111, 301, 302, 505 | **2SA666AI-R** | Transistor (Use in ranks Q or R or S) | 6 | |
| TR109, 110, 112, 201, 202, 203, 204, 205, 206, 207, 303, 401, 402, 403, 404, 409, 410, 501, 502, 503, 504 | **2SC1328-T** | Transistor | 21 | |
| TR304, 305, 306 | **2SA719-P** | Transistors (Use in ranks P or Q or R or S) | 3 | ○ |
| TR407, 408 | **2SC1384-Q** | Transistors (Use in ranks Q or R or S) | 2 | |
| | | **DIODES** | | |
| D1, 2 | SVDSIRBA20 | Rectifier | 2 | ○ |
| D3, 301 | SVDRD5.1EBS | 5.1V Zener, Voltage Stabilizer | 2 | ○ |
| D101, 202, 302, 501, 502, 503 | MA150 | Diodes | 6 | |
| D201 | SVDRD9.1EBS | 9.1V Zener, Voltage Stabilizer | 1 | |
| D203 | SVDGL-7R204 | Light Emitting Diode (r.p.m) | 1 | ○ |
| D204, 205, 206, 207, 208, 209, 210, 401, 402 | SVDSR105C | Light Emitting Diode | 9 | ○ |
| D303 | SVDGL-7R203 | Light Emitting Diode (pitch) | 1 | ○ |
| | | **CRYSTAL** | | |
| X204 | SVQU306115 | 4.19328MHz Oscillater | 1 | ○ |
| | | **TRANSFORMER** | | |
| T1 | SLT53353 | Power Transformer | 1 | ○ |
| | | **FUSE** | | |
| F1 | XBA2C025TR0 | 250mA (Fuse) | 1 | |
| F2, 3 | XBA2C06TR0 | 630mA (Fuse) | 2 | ○ |

| Ref. No. | Part No. | Part Name & Description | Per Set | Remarks |
|---|---|---|---|---|
| | | **SWITCHES** | | |
| S201, 202 | EVQP4R04K | Speed Selector Switches | 2 | ○ |
| S301, 302, 303 | EVQP4R04K | Pitch Control Switches | 3 | ○ |
| S401, 402 | EVQP4R04K | Start or Stop Switches | 2 | ○ |
| S501 | SFDSAH7350Z | Arm Switch | 1 | |
| S502 | ESB6015 | Return Cut Switch | 1 | |
| S601 | SFDSSS90L25 | Power Switch | 1 | ○ |
| S602 | SFDSHXW13312 | Switch, Power Source | 1 | |
| | SFDSHSW0634 | Muting Switch, Tone Arm | 1 | ○ |
| | | **RESISTORS** | | |
| R1 | **ERD25TJ562** | Carbon, 5.6kΩ, 1/4W, ± 5% | 1 | |
| R2 | **ERD25TJ102** | Carbon, 1kΩ, 1/4W, ± 5% | 1 | |
| R3 | **ERD25TJ152** | Carbon, 1.5kΩ, 1/4W, ± 5% | 1 | |
| R4 | **ERD25TJ151** | Carbon, 150Ω, 1/4W, ± 5% | 1 | |
| R5 | **ERD25TJ152** | Carbon, 1.5kΩ, 1/4W, ± 5% | 1 | |
| R6 | **ERD25TJ562** | Carbon, 5.6kΩ, 1/4W, ± 5% | 1 | |
| R7 | **ERD25TJ123** | Carbon, 12kΩ, 1/4W, ± 5% | 1 | |
| R8 | **ERD25TJ472** | Carbon, 4.7kΩ, 1/4W, ± 5% | 1 | |
| R9 | **ERG3ANJ470** | Metal Film, 47Ω, 3W, ± 5% | 1 | |
| R101, 102, 103 | **ERX1ANJ470** | Metal Film, 47Ω, 1W, ± 5% | 3 | |
| R104, 105, 106 | **ERX1ANJ150** | Metal Film, 15Ω, 1W, ± 5% | 3 | |
| R107 | **ERD25TJ472** | Carbon, 4.7kΩ, 1/4W, ± 5% | 1 | |
| R108 | **ERD25TJ392** | Carbon, 3.9kΩ, 1/4W, ± 5% | 1 | |
| R109 | **ERD25TJ150** | Carbon, 15Ω, 1/4W, ± 5% | 1 | |
| R110, 111 | **ERD25TJ103** | Carbon, 10kΩ, 1/4W, ± 5% | 2 | |
| R112 | **ERD25TJ472** | Carbon, 4.7kΩ, 1/4W, ± 5% | 1 | |
| R113 | **ERX1ANJ1R8** | Metal Film, 1.8Ω, 1W, ± 5% | 1 | |
| R114 | **ERD25TJ473** | Carbon, 47kΩ, 1/4W, ± 5% | 1 | |
| R115 | **ERD25TJ103** | Carbon, 10kΩ, 1/4W, ± 5% | 1 | |
| R116 | **ERD25TJ332** | Carbon, 3.3kΩ, 1/4W, ± 5% | 1 | |
| R117 | **ERD25TJ103** | Carbon, 10kΩ, 1/4W, ± 5% | 1 | |
| R118 | **ERD25TJ153** | Carbon, 15kΩ, 1/4W, ± 5% | 1 | |
| R119 | **ERD25TJ104** | Carbon, 100kΩ, 1/4W, ± 5% | 1 | |
| R120 | **ERD25TJ563** | Carbon, 56kΩ, 1/4W, ± 5% | 1 | |
| R121 | **ERD25TJ102** | Carbon, 1kΩ, 1/4W, ± 5% | 1 | |
| R122, 123 | **ERD25TJ104** | Carbon, 100kΩ, 1/4W, ± 5% | 2 | |
| R124 | **ERD25TJ103** | Carbon, 10kΩ, 1/4W, ± 5% | 1 | |
| R125 | **ERD25TJ393** | Carbon, 39kΩ, 1/4W, ± 5% | 1 | |
| R126 | **ERD25TJ103** | Carbon, 10kΩ, 1/4W, ± 5% | 1 | |
| R201 | **ERX1ANJ101** | Metal Film, 100Ω, 1W, ± 5% | 1 | |
| R202 | **ERD25TJ473** | Carbon, 47kΩ, 1/4W, ± 5% | 1 | |
| R203 | **ERD25TJ393** | Carbon, 39kΩ, 1/4W, ± 5% | 1 | |
| R204 | **ERD25TJ102** | Carbon, 1kΩ, 1/4W, ± 5% | 1 | |
| R205 | **ERD25TJ471** | Carbon, 470Ω, 1/4W, ± 5% | 1 | |
| R206, 207 | **ERD25TJ333** | Carbon, 33kΩ, 1/4W, ± 5% | 2 | |
| R208 | **ERD25TJ563** | Carbon, 56kΩ, 1/4W, ± 5% | 1 | |
| R209 | **ERD25TJ222** | Carbon, 2.2kΩ, 1/4W, ± 5% | 1 | |
| R210 | **ERD25TJ151** | Carbon, 150Ω, 1/4W, ± 5% | 1 | |
| R211 | **ERD25TJ221** | Carbon, 220Ω, 1/4W, ± 5% | 1 | |
| R212 | **ERD25TJ222** | Carbon, 2.2kΩ, 1/4W, ± 5% | 1 | |
| R213 | **ERD25TJ223** | Carbon, 22kΩ, 1/4W, ± 5% | 1 | |
| R214 | **ERD25TJ563** | Carbon, 56kΩ, 1/4W, ± 5% | 1 | |
| R215 | **ERD25TJ823** | Carbon, 82kΩ, 1/4W, ± 5% | 1 | |
| R216 | **ERD25TJ333** | Carbon, 33kΩ, 1/4W, ± 5% | 1 | |
| R217 | **ERD25TJ123** | Carbon, 12kΩ, 1/4W, ± 5% | 1 | |
| R218 | **ERD25TJ102** | Carbon, 1kΩ, 1/4W, ± 5% | 1 | |
| R219, 220 | **ERD25TJ471** | Carbon, 470Ω, 1/4W, ± 5% | 2 | |
| R221 | **ERD25TJ104** | Carbon, 100kΩ, 1/4W, ± 5% | 1 | |
| R222 | **ERD25TJ563** | Carbon, 56kΩ, 1/4W, ± 5% | 1 | |
| R223 | **ERD25TJ472** | Carbon, 4.7kΩ, 1/4W, ± 5% | 1 | |



| Ref. No. | Part No. | Part Name & Description | Per Set | Remarks |
|---|---|---|---|---|
| R224 | **ERD25TJ473** | Carbon, 47kΩ, 1/4W, ± 5% | 1 | |
| R225 | **ERD25TJ101** | Carbon, 100Ω, 1/4W, ± 5% | 1 | |
| R226 | **ERD25TJ681** | Carbon, 680Ω, 1/4W, ± 5% | 1 | |
| R227 | **ERD25TJ153** | Carbon, 15kΩ, 1/4W, ± 5% | 1 | |
| R228 | **ERD25TJ563** | Carbon, 56kΩ, 1/4W, ± 5% | 1 | |
| R229 | **ERD25TJ104** | Carbon, 100kΩ, 1/4W, ± 5% | 1 | |
| R230 | **ERD25TJ103** | Carbon, 10kΩ, 1/4W, ± 5% | 1 | |
| R231 | **ERD25TJ121** | Carbon, 120Ω, 1/4W, ± 5% | 1 | |
| R232 | **ERD25TJ680** | Carbon, 68Ω, 1/4W, ± 5% | 1 | |
| R233 | **ERD25TJ223** | Carbon, 22kΩ, 1/4W, ± 5% | 1 | |
| R234 | **ERD25TJ472** | Carbon, 4.7kΩ, 1/4W, ± 5% | 1 | |
| R301 | **ERD25TJ391** | Carbon, 390Ω, 1/4W, ± 5% | 1 | |
| R302 | **ERD25TJ272** | Carbon, 2.7kΩ, 1/4W, ± 5% | 1 | |
| R303 | **ERD25TJ102** | Carbon, 1kΩ, 1/4W, ± 5% | 1 | |
| R304 | **ERD25TJ103** | Carbon, 10kΩ, 1/4W, ± 5% | 1 | |
| R305 | **ERD25TJ472** | Carbon, 4.7kΩ, 1/4W, ± 5% | 1 | |
| R306 | **ERD25TJ102** | Carbon, 1kΩ, 1/4W, ± 5% | 1 | |
| R307 | **ERD25TJ332** | Carbon, 3.3kΩ, 1/4W, ± 5% | 1 | |
| R308 | **ERD25TJ273** | Carbon, 27kΩ, 1/4W, ± 5% | 1 | |
| R309, 310 | **ERD25TJ473** | Carbon, 47kΩ, 1/4W, ± 5% | 2 | |
| R311 | **ERD25TJ222** | Carbon, 2.2kΩ, 1/4W, ± 5% | 1 | |
| R312, 313 | **ERD25TJ153** | Carbon, 15kΩ, 1/4W, ± 5% | 2 | |
| R314 | EXBRB7121M | Composite Resistor, 120Ω, x 7, ±20% | 1 | ○ |
| R315, 316, 317 | **ERD25TJ152** | Carbon, 1.5kΩ, 1/4W, ± 5% | 3 | |
| R318 | **ERD25TJ221** | Carbon, 220Ω, 1/4W, ± 5% | 1 | |
| R319 | **ERD25TJ121** | Carbon, 120Ω, 1/4W, ± 5% | 1 | |
| R320 | **ERD25TJ680** | Carbon, 68Ω, 1/4W, ± 5% | 1 | |
| R401, 402, 403 | **ERD25TJ471** | Carbon, 470Ω, 1/4W, ± 5% | 3 | |
| R404, 405, 406 | **ERD25TJ103** | Carbon, 10kΩ, 1/4W, ± 5% | 3 | |
| R407, 408 | **ERD25TJ223** | Carbon, 22kΩ, 1/4W, ± 5% | 2 | |
| R409, 410 | **ERD25TJ683** | Carbon, 68kΩ, 1/4W, ± 5% | 2 | |
| R411, 412 | **ERD25TJ684** | Carbon, 680kΩ, 1/4W, ± 5% | 2 | |
| R413 | **ERD25TJ563** | Carbon, 56kΩ, 1/4W, ± 5% | 1 | |
| R414 | **ERD25TJ124** | Carbon, 120kΩ, 1/4W, ± 5% | 1 | |
| R415, 416 | **ERD25TJ473** | Carbon, 47kΩ, 1/4W, ± 5% | 2 | |
| R417, 418 | **ERD25TJ104** | Carbon, 100kΩ, 1/4W, ± 5% | 2 | |
| R419 | **ERD25TJ471** | Carbon, 470Ω, 1/4W, ± 5% | 1 | |
| R420, 421 | **ERD25TJ103** | Carbon, 10kΩ, 1/4W, ± 5% | 2 | |
| R422 | **ERD25TJ104** | Carbon, 100kΩ, 1/4W, ± 5% | 1 | |
| R501 | **ERD50TJ681** | Carbon, 680Ω, 1/2W, ± 5% | 1 | |
| R502 | **ERD25TJ123** | Carbon, 12kΩ, 1/4W, ± 5% | 1 | |
| R503 | **ERD25TJ473** | Carbon, 47kΩ, 1/4W, ± 5% | 1 | |
| R504 | **ERD25TJ333** | Carbon, 33kΩ, 1/4W, ± 5% | 1 | |
| R505 | **ERD25TJ274** | Carbon, 270kΩ, 1/4W, ± 5% | 1 | |
| R506, 507 | **ERD25TJ274** | Carbon, 270kΩ, 1/4W, ± 5% | 2 | |
| R508 | **ERD25TJ393** | Carbon, 39kΩ, 1/4W, ± 5% | 1 | |
| R509 | **ERD25TJ221** | Carbon, 220Ω, 1/4W, ± 5% | 1 | |
| R510 | **ERD25TJ824** | Carbon, 820kΩ, 1/4W, ± 5% | 1 | |
| R511 | **ERD25TJ333** | Carbon, 33kΩ, 1/4W, ± 5% | 1 | |
| R512 | **ERD25TJ183** | Carbon, 18kΩ, 1/4W, ± 5% | 1 | |
| R513 | **ERD25TJ473** | Carbon, 47kΩ, 1/4W, ± 5% | 1 | |
| R514 | **ERD25TJ123** | Carbon, 12kΩ, 1/4W, ± 5% | 1 | |
| R515 | **ERD25TJ472** | Carbon, 4.7kΩ, 1/4W, ± 5% | 1 | |
| R516 | **ERD25TJ473** | Carbon, 47kΩ, 1/4W, ± 5% | 1 | |
| R517 | **ERD25TJ393** | Carbon, 39kΩ, 1/4W, ± 5% | 1 | |
| R518 | **ERD25TJ102** | Carbon, 1kΩ, 1/4W, ± 5% | 1 | |
| R701 | **ERD50TJ4R7** | Carbon, 4.7Ω, 1/2W, ± 5% | 1 | |

| Ref. No. | Part No. | Part Name & Description | Per Set | Remarks |
|---|---|---|---|---|
| | | **VARIABLE RESISTORS** | | |
| VR101 | **EVLS3AA00B14** | Period Adjustment | 1 | ○ |
| VR201 | **EVLS3AA00B24** | VS Adjustment | 1 | |
| VR202 | **EVLS3AA00B24** | IR Adjustment | 1 | |
| VR203 | **EVLS3AA00B54** | Brake Adjustment | 1 | ○ |
| VR501 | **EVLS3AA00B24** | Gain Adjustment | 1 | ○ |
| VR502 | **EVLS3AA00B55** | Time Adjustment | 1 | ○ |
| | | **CAPACITORS** | | |
| C1 | **ECEB35V330** | Electrolytic, 330μF, 35V | 1 | |
| C2 | **ECEA25V33** | Electrolytic, 33μF, 25V | 1 | |
| C3 | **ECEA16V10** | Electrolytic, 10μF, 16V | 1 | |
| C4 | **ECEA16V47** | Electrolytic, 47μF, 16V | 1 | |
| C5 | **ECEB50V470** | Electrolytic, 470μF, 50V | 1 | |
| C6 | **ECEA25V33** | Electrolytic, 33μF, 25V | 1 | |
| C101, 102, 103 | **ECEA25V33** | Electrolytic, 33μF, 25V | 3 | |
| C104 | **ECQM1H104KZ** | Polyester, 0.1μF, 50V, ±10% | 1 | |
| C105 | ECSZ25EF1 | Electrolytic, 1μF, 25V | 1 | |
| C106 | ECSZ25EF2R2 | Electrolytic, 2.2μF, 25V | 1 | |
| C107 | ECSZ25EF1 | Electrolytic, 1μF, 25V | 1 | |
| C108 | **ECQM1H223KZ** | Polyester, 0.022μF, 50V, ±10% | 1 | |
| C109 | ECEA25Z100 | Electrolytic, 100μF, 25V | 1 | |
| C110 | **ECQM05154KZ** | Polyester, 0.15μF, 50V, ±10% | 1 | |
| C111 | **ECQM1H333KZ** | Polyester, 0.033μF, 50V, ±10% | 1 | |
| C112 | **ECQM1H104KZ** | Polyester, 0.1μF, 50V, ±10% | 1 | |
| C113 | **ECQM1H562KZ** | Polyester, 0.0056μF, 50V, ±10% | 1 | |
| C114 | **ECEA25V100** | Electrolytic, 100μF, 25V | 1 | |
| C115 | **ECEA16V10** | Electrolytic, 10μF, 16V | 1 | |
| C201 | ECKD1E104ZFZ | Ceramic, 0.1μF, 50V | 1 | |
| C202 | **ECEA25V2R2** | Electrolytic, 2.2μF, 25V | 1 | |
| C203 | ECSZ25EF2R2 | Electrolytic, 2.2μF, 25V | 1 | |
| C204 | ECCD1H330K | Ceramic, 33pF, 50V, ±10% | 1 | |
| C205, 206 | ECCD1H331K | Ceramic, 330pF, 50V, ±10% | 2 | |
| C207 | **ECQM1H822KZ** | Polyester, 0.0082μF, 50V, ±10% | 1 | |
| C208, 209 | ECSZ25EF1 | Electrolytic, 1μF, 25V | 2 | |
| C210 | **ECQM1H103KZ** | Polyester, 0.01μF, 50V, ±10% | 1 | |
| C211 | **ECQM1H563KZ** | Polyester, 0.056μF, 50V, ±10% | 1 | |
| C212 | **ECQM1H104KZ** | Polyester, 0.1μF, 50V, ±10% | 1 | |
| C213 | **ECEA16V10** | Electrolytic, 10μF, 16V | 1 | |
| C214 | **ECQM1H562KZ** | Polyester, 0.0056μF, 50V, ±10% | 1 | |
| C215 | **ECQM1H562KZ** | Polyester, 0.0056μF, 50V, ±10% | 1 | |
| C216, 217 | **ECQM1H104KZ** | Polyester, 0.1μF, 50V, ±10% | 2 | |
| C218 | **ECQM1H562KZ** | Polyester, 0.0056μF, 50V, ±10% | 1 | |
| C219, 220 | **ECQM1H104KZ** | Polyester, 0.1μF, 50V, ±10% | 2 | |
| C221 | ECKD1E104ZFZ | Ceramic, 0.1μF, 50V | 1 | |
| C222 | **ECEA50V4R7** | Electrolytic, 4.7μF, 50V | 1 | |
| C223 | **ECEA50V1** | Electrolytic, 1μF, 50V | 1 | |
| C224 | **ECEA16V10** | Electrolytic, 10μF, 16V | 1 | |
| C225 | **ECQM1H473KZ** | Polyester, 0.047μF, 50V, ±10% | 1 | |
| C226, 227 | **ECQM1H104KZ** | Polyester, 0.1μF, 50V, ±10% | 2 | |
| C228 | **ECEA16V47** | Electrolytic, 47μF, 16V | 1 | |
| C229 | **ECQM1H103KZ** | Polyester, 0.01μF, 50V, ±10% | 1 | |
| C230 | **ECQM1H102KZ** | Polyester, 0.001μF, 50V, ±10% | 1 | |
| C231 | ECKD1E104ZFZ | Ceramic, 0.1μF, 50V | 1 | |
| C301 | **ECEA16V10** | Electrolytic, 10μF, 16V | 1 | |
| C302 | **ECQM1H102KZ** | Polyester, 0.001μF, 50V, ±10% | 1 | |
| C303 | **ECQM1H103KZ** | Polyester, 0.01μF, 50V, ±10% | 1 | |

| Ref. No. | Part No. | Part Name & Description | Per Set | Remarks |
|---|---|---|---|---|
| 19 | SFUP132-03 | Bracket, Power Transformer | 1 | |
| 19-1 | SFGC132-01 | Spacer (Rubber), Power Transformer Bracket | 1 | ○ |
| 19-2 | **XTN4+10B** | Screw, Power Transformer | 2 | ○ |
| 19-3 | SFXW750-01 | Washer, Power Transformer Bracket | 3 | |
| 19-4 | **XTN3+10B** | Screw, Power Transformer Bracket | 1 | |
| 20 | SFKT132-07 | Knob, Manual Switch | 1 | |
| 21 | SFUP132-10 | Bracket, Manual Switch | 1 | ○ |
| 22 | SFDJ132-05E | Connector, 2P Ass'y | 1 | ○ |
| 22-1 | **XTN3+8B** | Screw, Manual Switch | 4 | ○ |
| 23 | SFUK132-01E | Operation Plate Ass'y | 1 | ○ |
| 24 | SFUM13214 | Lever, Select Cam | 1 | |
| 25 | SFUP132-05 | Plate, Operation Support | 1 | |
| 26 | SFUM132-11 | Cam, Repeat | 1 | ○ |
| 27 | SFUM132-12 | Gear, Operation Plate | 1 | ○ |
| 28 | SFUM132-13 | Cam, Select | 1 | ○ |
| 28-1 | SFYB5-32 | Steel Ball, Select Cam | 2 | ○ |
| 28-2 | SFQA829-2 | Spring Select Cam | 2 | ○ |
| 28-3 | **XTN3+8B** | Screw, Operation Plate | 3 | ○ |
| 28-4 | **XTN3+8B** | Screw, Operation Plate | 2 | ○ |
| 29 | SFUP132-02E | Bracket, Power Switch | 1 | |
| 29-1 | SFUZ132-02 | Felt, Power Switch Knob | 1 | ○ |
| 29-2 | SFXJ132-03 | Support, Power Switch Knob | 1 | |
| 29-3 | SFQA001-02 | Spring, Power Switch Knob | 1 | ○ |
| 29-4 | SFUP001-10 | Support, Power Switch Knob | 1 | ○ |
| 30 | SFUM01-11 | Cam, Power Switch | 1 | |
| 30-1 | SFUP001-12 | Support, Power Switch | 1 | |
| 30-2 | SFUM132-07 | Cam, Power Switch Cam | 1 | |
| 31 | SFUM132-05 | Holder, Power Switch | 1 | ○ |
| 32 | SFUM132-06 | Holder, Power Switch | 1 | ○ |
| 32-1 | **XTN3+8B** | Screw, Power Switch Bracket | 1 | ○ |
| 32-2 | **XTN3+16B** | Screw, Power Switch Holder | 2 | |
| 32-3 | **XSN3+10S** | Screw, Power Switch Cam | 1 | |
| 32-4 | **XWC3B** | Washer, Power Switch Cam | 1 | |
| 33 | SFUP132-08 | Mirror | 1 | |
| 34 | SFUP132-04 | Bracket, Panel | 1 | |
| 34-1 | **XTN3+10B** | Screw, Panel Bracket | 1 | ○ |
| 35 | SFKT132-05 | Knob, Power Switch | 1 | ○ |
| **36** [X, XAL, E XG,XGF,AE] | SFUM132X01 | Panel | 1 | ○ |
| **36** [10E, 10XG, 10AXG, 10AE] | SFUM133S01 | Panel | 1 | ○ |
| 37 | SFKT132-03 | Knob, Operation | 1 | |
| 38 | SFKT132-04 | Knob, Operation | 4 | ○ |
| 39 | SFKT132-01E | Knob, Operation | 1 | ○ |
| 40 | SFKT132-02E | Knob, Operation | 1 | ○ |
| 41 | SFUM132-09 | Felt | 1 | ○ |
| 41-1 | **XWA3B** | Washer, Panel | 1 | ○ |
| 41-2 | **XWG3BS** | Nut, Panel | 4 | ○ |
| 41-3 | **XTN3+8B** | Screw, P.C.B | 4 | ○ |
| 42 | SFXB132-02 | Spacer, Operation | 8 | ○ |
| 42-1 | SFXB132-01 | Spacer, Operation | 2 | ○ |
| 42-2 | SFXG132-01 | Screw, Operation | 5 | ○ |
| 42-3 | **XNS6JM** | Nut, Operation Spacer | 4 | ○ |
| 42-4 | **XNG4HS1** | Nut, Operation Spacer | 2 | ○ |
| 42-5 | SFQA132-01 | Spring, Operation Knob | 5 | ○ |
| 42-6 | SFQA132-02 | Spring, Operation Knob | 2 | ○ |

| Ref. No. | Part No. | Part Name & Description | Per Set | Remarks |
|---|---|---|---|---|
| C304 | **ECEA50V4R7** | Electrolytic, 4.7μF, 50V | 1 | |
| C305 | **ECQM1H103KZ** | Polyester, 0.01μF, 50V, ±10% | 1 | |
| C306 | **ECQM1H104KZ** | Polyester, 0.1μF, 50V, ±10% | 1 | |
| C307 | ECKD1E1042FZ | Ceramic, 0.1μF, 50V | 1 | |
| C308 | **ECEA6V220** | Electrolytic, 220μF 6V, | 1 | |
| C310 | **ECQM1H102KZ** | Polyester, 0.001μF, 50V, ±10% | 1 | |
| C401, 402 | ECEA16247 | Electrolytic, 47μF, 16V, | 2 | |
| C403, 404 | **ECEA50V2R2** | Electrolytic, 2.2μF, 50V | 2 | |
| C501 | **ECEA50ZR1** | Electrolytic, 1μF, 50V | 1 | |
| C502 | **ECQM1H473KZ** | Polyester, 0.047μF, 50V, ±10% | 1 | |
| C503 | **ECQM1H184KZ** | Polyester, 0.18μF, 50V, ±10% | 1 | |
| C504 | **ECQM1H473KZ** | Polyester, 0.047μF, 50V, ±10% | 1 | |
| C505 | **ECEA25Z4R7** | Electrolytic, 4.7μF, 25V | 1 | |
| C701 [X, 10XG, 10AXG] | ECQB2A472JZ | Polyester, 0.047μF, 200V, ±20% | 1 | |
| C701 [XAL, E, AE, 10E, 10AE] | ECQM2J473JZ | Polyester, 0.047μF, 450V, ±20% | 1 | |
| | | **CABINET and CHASSIS PARTS** | | |
| 1 | SFAD132-01A | Dust Cover | 1 | |
| 2 | SFAT165-01A | Hinge Ass'y | 2 | |
| 3 | SFTG170-01 | Turntable Mat | 1 | |
| 4 | SFTE132-01A | Turntable | 1 | |
| 5 | SFKT132-06A | Knob, Operation | 2 | |
| 6 | SFUM132-02 | Cover, Panel | 1 | |
| 6-1 | **XTN3+6BFZ** | Screw, Panel Cover | 6 | |
| **6-2** [X, XG, XGF AE] | SFNN132X01 | Name Plate | 1 | |
| **6-2** [XAL] | SFNN132G01 | Name Plate | 1 | |
| **6-2** [E] | SFNN132S01 | Name Plate | 1 | |
| **6-2** [10XG, 10AXG, 10AE] | SFNN133S01 | Name Plate | 1 | |
| 7 | SFUM132-04 | Cover, Power Transformer | 1 | |
| 7-1 | **XTN3+10BFZ** | Screw, Power Transformer Cover | 2 | |
| 7-2 | **XWG3** | Washer, Power Transformer Cover | 2 | |
| 8 [Except XAL] | **SFKP419G** | AC Cord | 1 | |
| 8 [XAL only] | SFCE1208M | AC Cord | 1 | |
| 9 | SFUM170-06 | Spacer, AC Power Cord | 1 | |
| **10** [Except XAL] | SFUM170-11 | Bracket, AC Power Cord | 1 | |
| **10** [XAL only] | SFUM170-05 | Bracket, AC Power Cord | 1 | |
| 10-1 | **XTN3+14BFZ** | Screw, AC Power Cord Bracket | 2 | |
| 10-2 | **XWG3** | Washer, AC Power Cord Bracket | 2 | |
| 11 | SFUM170-07 | Case, Hinge Ass'y | 4 | |
| 11-1 | **XTN3+8BFZ** | Screw, Hinge Ass'y Case | 1 | |
| 12 | SFDH028-01 | Phono Cord | 1 | |
| 13 | SFEL028-01E | Ground Wire | 1 | |
| 14 | SFUM170-06 | Spacer, Phono Cord | 1 | |
| 15 | SFUM170-11 | Bracket, Phono Cord | 2 | |
| 15-1 | **XTN3+14BFZ** | Screw, Phono Cord Bracket | 2 | |
| 15-2 | **XWG3** | Washer, Phono Cord Bracket | 1 | |
| 16 | **XTN3+8B** | Screw, Phono P.C.B | 1 | |
| **17** [X, XAL, E, XG, XGF, AE] | SFAC132-01 | Cabinet | 1 | |
| **17** [10E, 10XG 10AXG, 10AE] | SFAC133S01 | Cabinet | 1 | |
| 17-1 | SFUP132X01 | Plate, Insulation | 1 | |
| 18 | **XTN3+8B** | Screw, P.C.B | 2 | |



## ■ EXPLODED VIEWS

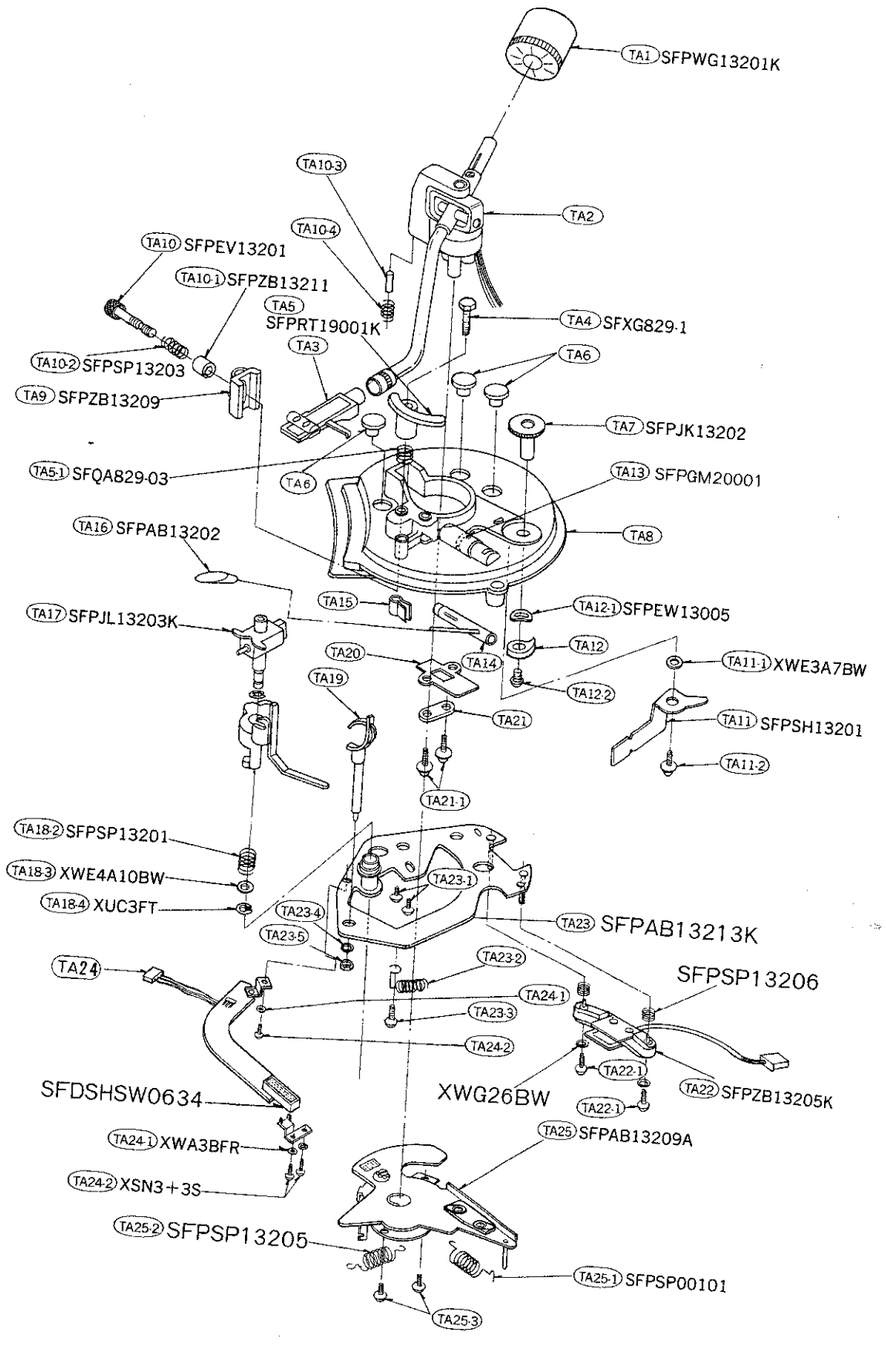




## ■ EXPLOD

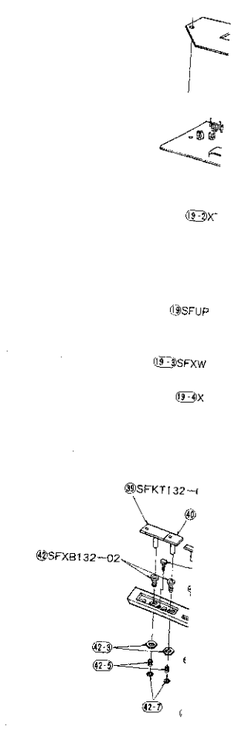

| | | |
|---|---|---|
| 7 | Nut, Operation Spacer | |
| 5 | Spring, Operation Knob | ○ |
| 2 | Spring, Operation Knob | ○ |
| 5 | | |
| 42-4 | XNG4HS1 | |
| 42-5 | SFQA132-01 | |
| 42-6 | SFQA132-02 | |
| | | |
| 1 | Plate, Insulation | |
| 2 | Screw, P.C.B | |
| 17-1 | SFUP132X01 | |
| 18 | XTN3+8B | |
| 10AXG,10AE | | |

## ■ EXPLODED VIEWS

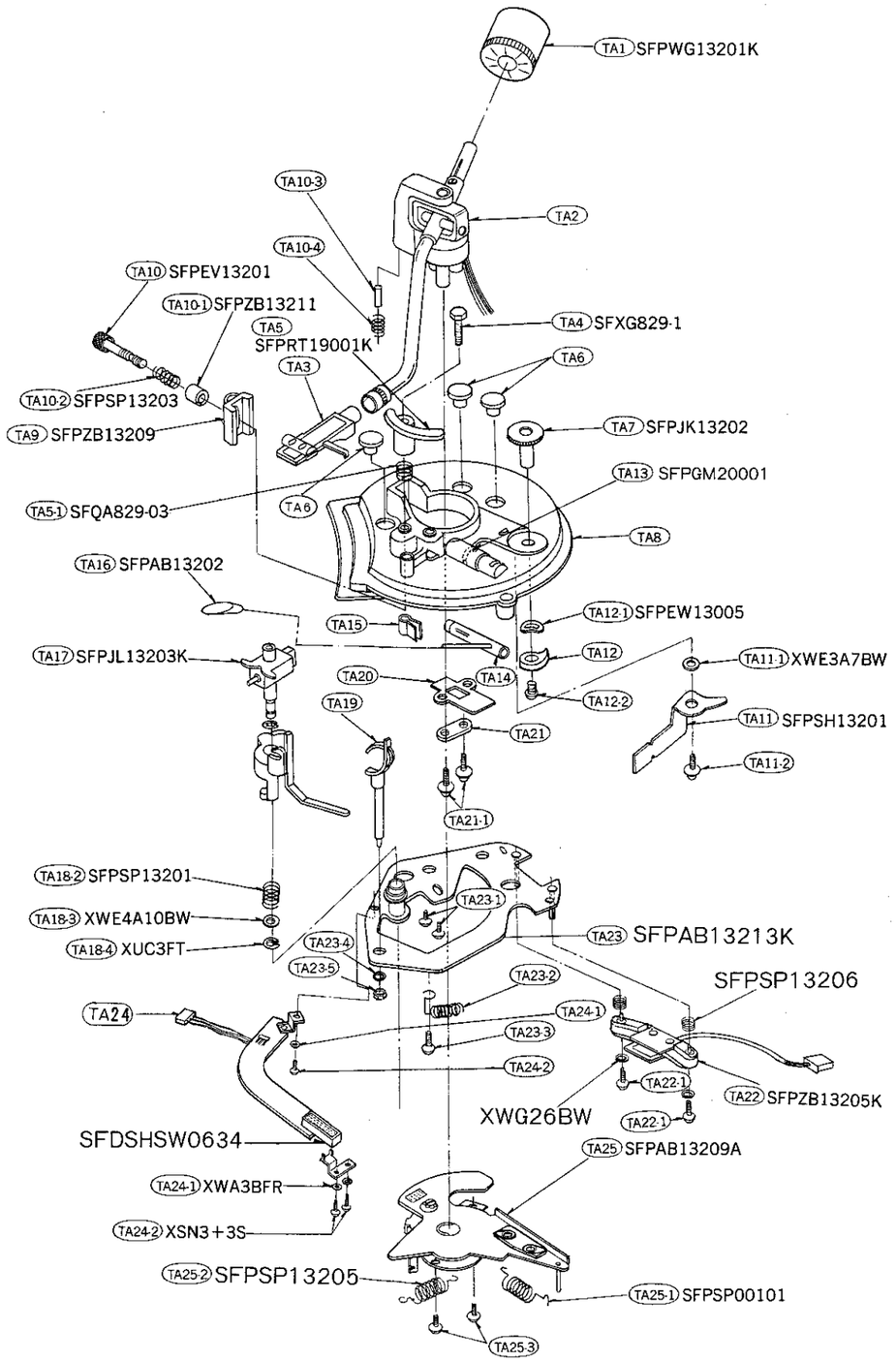




## ■ EXPLODED VIEWS

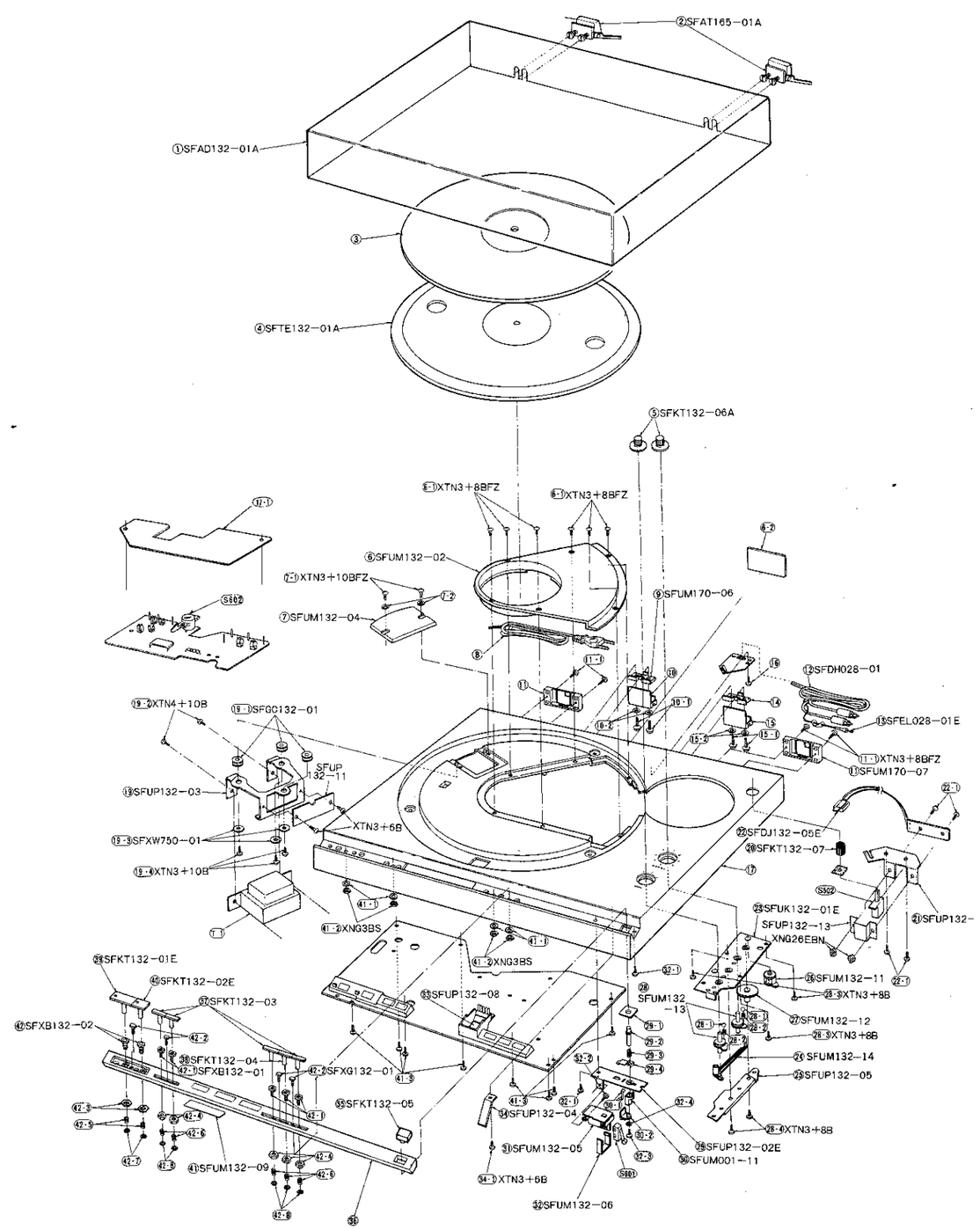

# ■ EXPLODED VIEWS

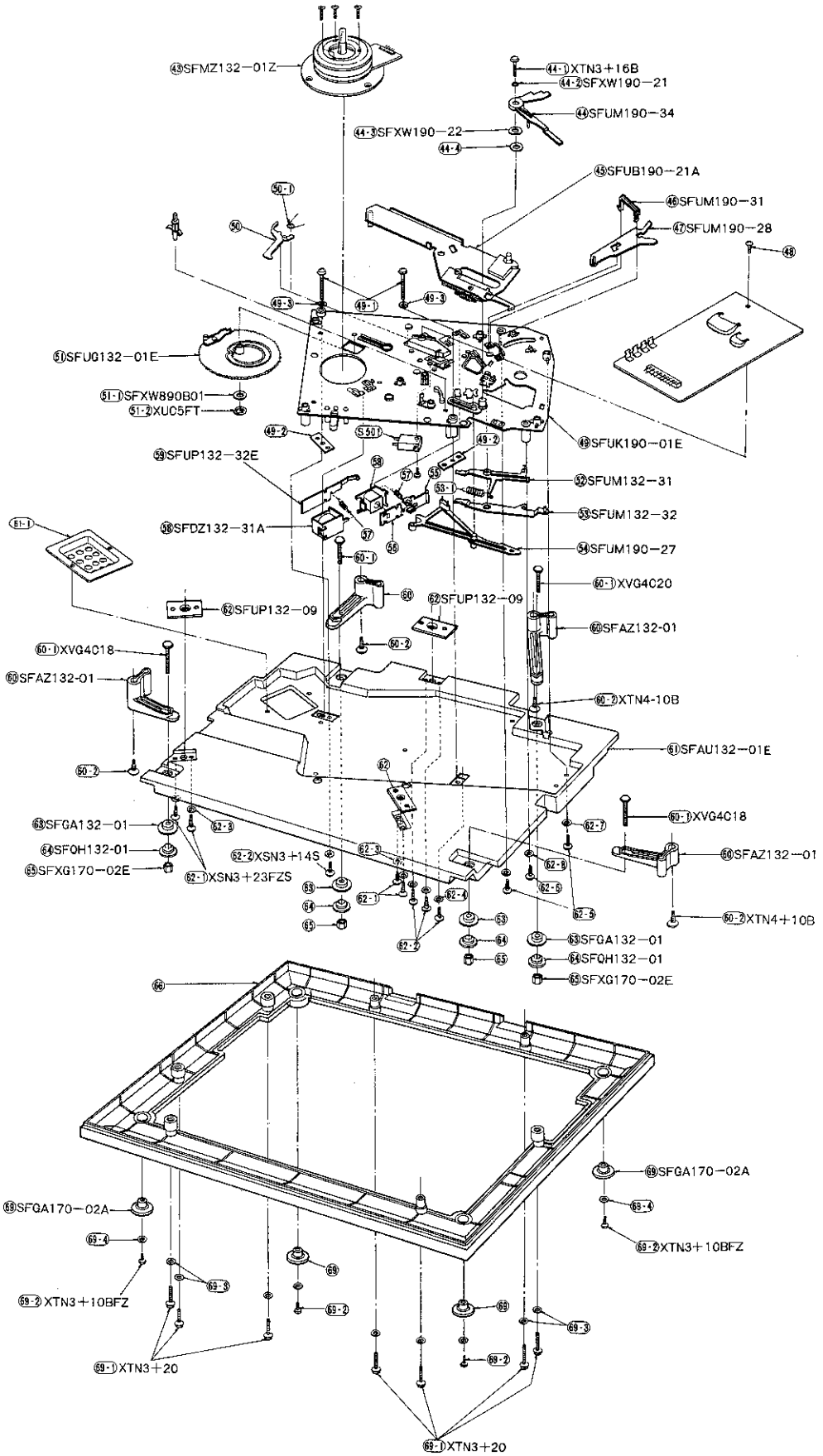

| Ref. No. | Part No. | Part Name & Description | Per Set | Remarks |
|---|---|---|---|---|
| 42-7 | **XUC3FT** | Circlip, Operation Knob | 2 | |
| 42-8 | **XUC25FT** | Circlip, Operation Knob | 5 | |
| 43 | SFMZ132-01Z | D.D. Motor Ass'y | 1 | O |
| 44 | SFUM190-34 | Index Plate | 1 | |
| 44-1 | **XTN3+16B** | Screw, Index plate | 1 | |
| 44-2 | SFXW190-21 | Washer, Index Plate | 1 | |
| 44-3 | SFXW190-22 | Washer, Index Plate | 1 | |
| 44-4 | SFXW190-23 | Washer, Index Plate | 1 | |
| 45 | SFUB190-21A | Operating Plate Ass'y | 1 | |
| 46 | SFUM190-31 | Support, Switch Plate | 1 | |
| 47 | SFUM190-28 | Plate, Switch | 1 | |
| 48 | **XTN3+8B** | Screw, P.C.B | 1 | |
| 49 | SFUK190-01E | Base, Automatic Mechanism | 1 | |
| 49-1 | **XTN4+35B** | Screw, Automatic Mechanism | 2 | |
| 49-2 | SFUP190-02 | Bracket, Automatic Mechanism Base | 2 | |
| 49-3 | **XWG4** | Washer, Automatic Mechanism | 2 | |
| 50 | SFUM190-26 | Support, Gear Setting | 1 | |
| 50-1 | SFQS190-21 | Spring, Gear Setting Support | 1 | |
| 51 | SFUG132-01E | Main Gear Ass'y | 1 | O |
| 51-1 | SFXW890B01 | Washer, Main Gear | 1 | |
| 51-2 | **XUC5FT** | Circlip, Main Gear | 1 | |
| 52 | SFUM132-31 | Lever, Start Set | 1 | O |
| 53 | SFUM132-32 | Support, Start Set Lever | 1 | O |
| 53-1 | SFQH130-14 | Spring, Start Set Lever Support | 1 | |
| 54 | SFUM190-27 | Lever, Switching | 1 | |
| 55 | SFUM132-33 | Support, Solenoid | 1 | O |
| 56 | SFUP132-31E | Support, Solenoid | 1 | O |
| 57 | SFQH910-05 | Spring, Solenoid | 2 | |
| 58 | SFDZ132-31A | Solenoid Ass'y | 2 | O |
| 59 | SFUP132-32E | Support, Solenoid | 1 | O |
| 60 | SFAZ132-01 | Insulator (A) | 4 | O |
| 60-1 | XVG4C18 | Screw, Insulator (A) | 4 | |
| 60-2 | **XTN4+10B** | Screw, Insulator (A) | 4 | |
| 61 | SFAU132-01E | Base, Main | 1 | O |
| 61-1 | SFUP132-01 | Cover, Power Transformer | 1 | O |
| 61-2 | XTN3+16 | Screw, Power Transformer Cover | 2 | |
| 61-3 | XWG3 | Washer, Power Transformer Cover | 2 | |
| 61-4 | XWG4 | Washer, Power Transformer Cover | 2 | |
| 62 | SFUP132-09 | Bracket, Main Base | 3 | O |
| 62-1 | **XSN3+23FZS** | Screw, Main Base Bracket | 4 | |
| 62-2 | **XSN3+14S** | Screw, Main Base Bracket | 4 | |
| 62-3 | **XWG3** | Washer, Main Base Bracket | 4 | |
| 62-4 | **XWG3** | Washer, Main Base Bracket | 4 | |
| 62-5 | **XTN4+35B** | Screw, Main Base | 2 | |
| 62-6 | **XTN3+35B** | Screw, Main Base | 6 | |
| 62-7 | **XWG4** | Washer, Main Base | 2 | |
| 62-8 | **XWG3** | Washer, Main Base | 6 | |
| 63 | SFGA132-01 | Rubber, Insulator (A) | 4 | O |
| 64 | SFQH132-01 | Spring, Insulator (A) | 4 | O |
| 65 | SFXG170-02E | Nut, Insulator (A) | 4 | |
| **66** [X, XAL, E, XG, XGF, AE] | SFAU132-02A | Bottom, Cover | 1 | O |
| **66** [10E, 10XG, 10AXG, 10AE] | SFAU133S02A | Bottom, Cover | 1 | O |
| 69 | SFGA170-02A | Insulator (B) | 4 | |
| 69-1 | **XTN3+20** | Screw, Bottom Cover | 7 | |
| 69-2 | **XTN3+10BFZ** | Screw, Insulator (B) | 4 | |
| 69-3 | **XWG3** | Washer, Bottom Cover | 7 | |
| 69-4 | **XWG4** | Washer, Insulator (B) | 4 | |

| Ref. No. | Part No. | Part Name & Description | Per Set | Remarks |
|---|---|---|---|---|
| | | **TONE ARM and ARM BASE** | | |
| TA1 | SFPWG13201K | Balance Weight Ass'y | 1 | O |
| **TA2** [X, XAL, E, XG, XGF, AE] | SFPAM13201K | Tone Arm Ass'y | 1 | O |
| **TA2** [10E, 10XG 10AXG, 10AE] | SFPAM13202K | Tone Arm Ass'y | 1 | O |
| TA3 | SFPCC10001K | Head Shell | 1 | O |
| **TA3-1** [X, XAL] | EPC205C2SK-X | Cartridge | 1 | O |
| **TA3-1** [AE, 10AXG, 10AE] | EPC205C2LK-X | Cartridge | 1 | |
| **TA3-2** [X, XAL, AE,10AXG,10AE] | SFPEV7803 | Screw, Cartridge | 2 | |
| **TA3-3** [X, XAL, AE,10AXG,10AE] | SFPEN3302 | Nut, Cartridge | 2 | |
| **TA3-4** [X, XAL, AE,10AXG,10AE] | SFPEW9601 | Washer, Cartridge | 2 | |
| TA4 | SFXG829-1 | Screw, Tone Arm Lift Adjustment | 1 | |
| TA5 | SFPRT19001K | Lift Ass'y | 1 | |
| TA5-1 | SFQA829-03 | Spring, Lift Ass'y | 1 | |
| **TA6** [X, XAL, E, XG, XGF, AE] | SFGK132-01 | Cap, Rubber | 3 | O |
| **TA6** [10E, 10XG 10AXG, 10AE] | SFGK133S01 | Cap, Rubber | 3 | O |
| **TA7** | SFPJK13202 | Knob, Anti-skate Force Control | 1 | O |
| **TA8** [X, XAL, E, XG, XGF, AE] | SFPKD13201 | Arm Base | 1 | O |
| **TA8** [10E, 10XG 10AXG, 10AE] | SFPKD13202 | Arm Base | 1 | O |
| TA9 | SFPZB13209 | Bracket, Tone Arm | 1 | O |
| TA10 | SFPEV13201 | Screw, Tone Arm Bracket | 1 | O |
| TA10-1 | SFPZB13211 | Cover, Spring | 1 | O |
| TA10-2 | SFPSP13203 | Spring, Tone Arm Bracket Screw | 1 | O |
| TA10-3 | SFPZB13212 | Pin, Tone Arm Bracket Screw | 1 | O |
| TA10-4 | SFPSP13204 | Spring, Tone Arm Bracket Screw | 1 | O |
| TA11 | SFPSH13201 | Support, Anti-skate-Force Control | 1 | O |
| TA11-1 | XWE3A7BW | Washer, Anti-skate Force Control Support | 1 | |
| TA11-2 | **XTN3+5B** | Screw, Anti-Skate Force Control Support | 1 | |
| TA12 | SFPJK17002 | Cam, Anti-Skate Force Control | 1 | |
| TA12-1 | SFPEW13005 | Washer, Anti-Skate Force Control Knob | 1 | |
| TA12-2 | **XTN26+5B** | Screw, Anti-Skate Force Control | 1 | |
| TA13 | SFPGM20001 | Rubber, Cueing Lever | 1 | |
| TA14 | SFPJL13201K | Cueing Lever Ass'y | 1 | O |
| TA15 | SFPZB13204 | Plate, Arm Rest | 1 | O |
| TA16 | SFPAB13202 | Knob, Arm Lift | 1 | O |
| TA17 | SFPJL13203K | Lift Bar Ass'y | 1 | O |
| TA18-2 | SFPSP13201 | Spring, Arm Lift Base | 1 | O |
| TA18-3 | XWE4A10BW | Washer, Arm Lift Base | 1 | |
| TA18-4 | **XUC3FT** | Circlip, Arm Lift Base | 1 | |
| TA19 | SFPRT13201K | Arm Rest | 1 | O |
| TA20 | SFPAB13203 | Plate, Lift | 1 | O |
| TA21 | SFPZB13208 | Support, Lift | 1 | O |
| TA21-1 | **XTN3+5B** | Screw, Lift Support | 2 | |
| TA22 | SFPZB13205K | Support, P.C.B | 1 | O |
| TA22-1 | XSN26+8S | Screw, Support | 2 | |
| TA23 | SFPAB13213K | Base, Arm Lift | 1 | O |
| TA23-1 | **XSN3+5S** | Screw, Arm Lift Base | 2 | |
| TA23-2 | SFPSP13202 | Spring | 1 | O |

| Ref. No | Part No. | Part Name & Description | Per Set | Remarks |
|---|---|---|---|---|
| TA23-3 | **XSN3+3S** | Screw, Spring | 1 | |
| TA23-4 | **XWA26B** | Washer, Arm Rest | 1 | |
| TA23-5 | **XNG26BFN** | Nut, Arm Rest | 1 | |
| TA24 | SFPAB13215K | PU Output Cord Ass'y | 1 | O |
| TA24-1 | **XWA3B** | Washer, P.C.B. Ass'y | 2 | |
| TA24-2 | **XSN3+3S** | Screw, P.C.B. Ass'y | 2 | |
| TA25 | SFPAB13209A | Tone Arm Fixing Plate Ass'y | 1 | O |
| TA25-1 | SFPSP00101 | Spring | 1 | |
| TA25-2 | SFPSP13205 | Spring, Tone Arm Fixing Plate Ass'y | 1 | |
| TA25-3 | **XSN3+6S** | Screw | 2 | |
| | | **ACCESSORIES** | | |
| A1 | SFNU132X01 | Instruction Book | 1 | O |
| 10AE] | | | | |
| A2 | **SFWE154A1** | Adaptor, 45 r.p.m | 1 | |
| A3 | SFCFB20502 | Driver, Screw | 1 | |
| A4 | SFWO010 | Oil | 1 | |
| **A5** [E, XG, XGF, 10E, 10XG] | SFPEV7803 | Screw, Cartridge | 2 | |
| **A5-1** [E, XG, XGF, 10E, 10XG] | SFPEV10005 | Screw, Cartridge | 2 | |
| **A5-2** [E, XG, XGF, 10E, 10XG] | SFPEV10009 | Screw, Cartridge | 2 | |
| **A5-3** [E, XG, XGF, 10E, 10XG] | SFPEN9200 | Nut, Cartridge | 2 | |
| A5-4 | SFYF05A06 | Polyethylene Bag | 1 | |
| A6 | SFDK100G | DIN-PIN Adaptor | 1 | |
| | | **PACKING PARTS** | | |
| **P1** [X, XAL, E, XG, AE] | SFHP132X01 | Carton | 1 | O |
| **P1** [XGF] | SFHP132J01 | Carton | 1 | O |
| **P1** [10E, 10XG] | SFHP133S01 | Carton | 1 | O |
| **P1** [10AXG, 10AE] | SFHP133A01 | Carton | 1 | O |
| P2 | SFHH132-01 | Pad, Front | 1 | O |
| P3 | SFHH132-02 | Pad, Rear | 1 | O |
| P4 | SFHD132-02 | Pad, Turntable | 1 | O |
| P5 | SFHD132-01 | Pad, Top | 1 | O |
| P6 | SFHH170-03 | Parts Box | 1 | |
| P7 | SFHD170-03 | Pad, Top, Parts Box | 1 | |
| P7-1 | SFYC22A30 | Polyethylene Cover | 1 | |
| P8 | XST6D30B | Screw, Clamp | 3 | O |
| P9 | SFYF60A60 | Polyethylene Bag, Player Unit | 1 | |
| P9-1 | SFYH40X45 | Polyethylene Bag, Turntable | 1 | |
| P9-2 | SFYH10X30 | Polyethylene Bag, AC Cord | 2 | O |

- The model SL-1300 MK2A(X) is available in Asia, Latin America, Middle East and Africa only.
- The model SL-1300MK2(E) is available in Scandinavia and Switzerland only.
- The model SL-1300MK2(XAL) is available in Australia only.
- The model SL-1300MK2(XG) is available in European only.
- The model SL-1300MK2(XGF) is available in France only.
- The model SL-1310MK2(E) is available in Scandinavia and Switzerland only.
- The model SL-1310MK2(XG) is available in European only.
- The model SL-1300MK2A(E) is available in Scandinavia and Switzerland only.
- The model SL-1310MK2A(XG) is available in European only.
- The model SL-1310MK2A(E) is available in Scandinavia and Switzerland only.

## ■ PACKINGS

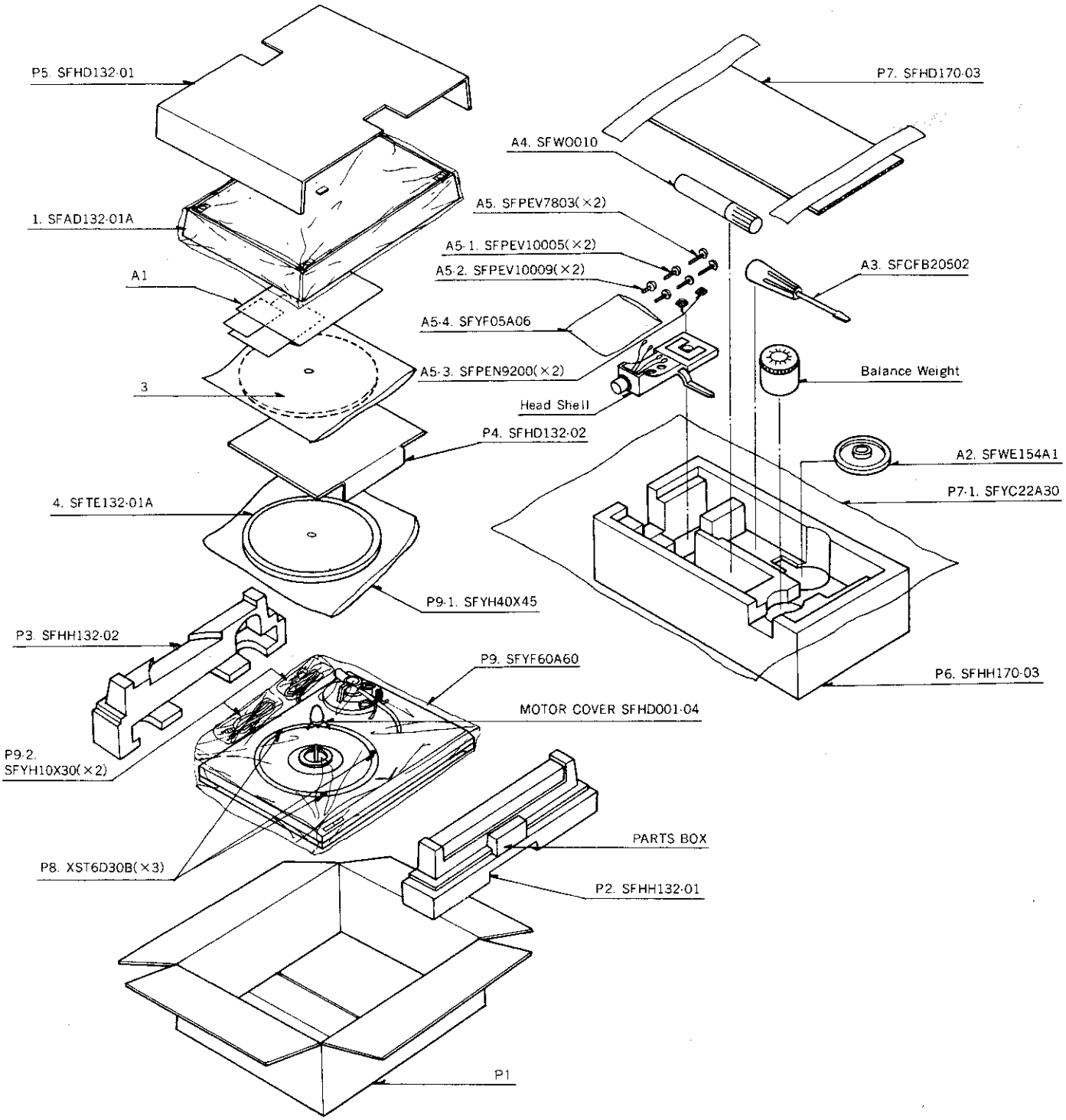




Printed in Japan
7708-7600 Ⓐ