동원 INKEL 암프 AD2

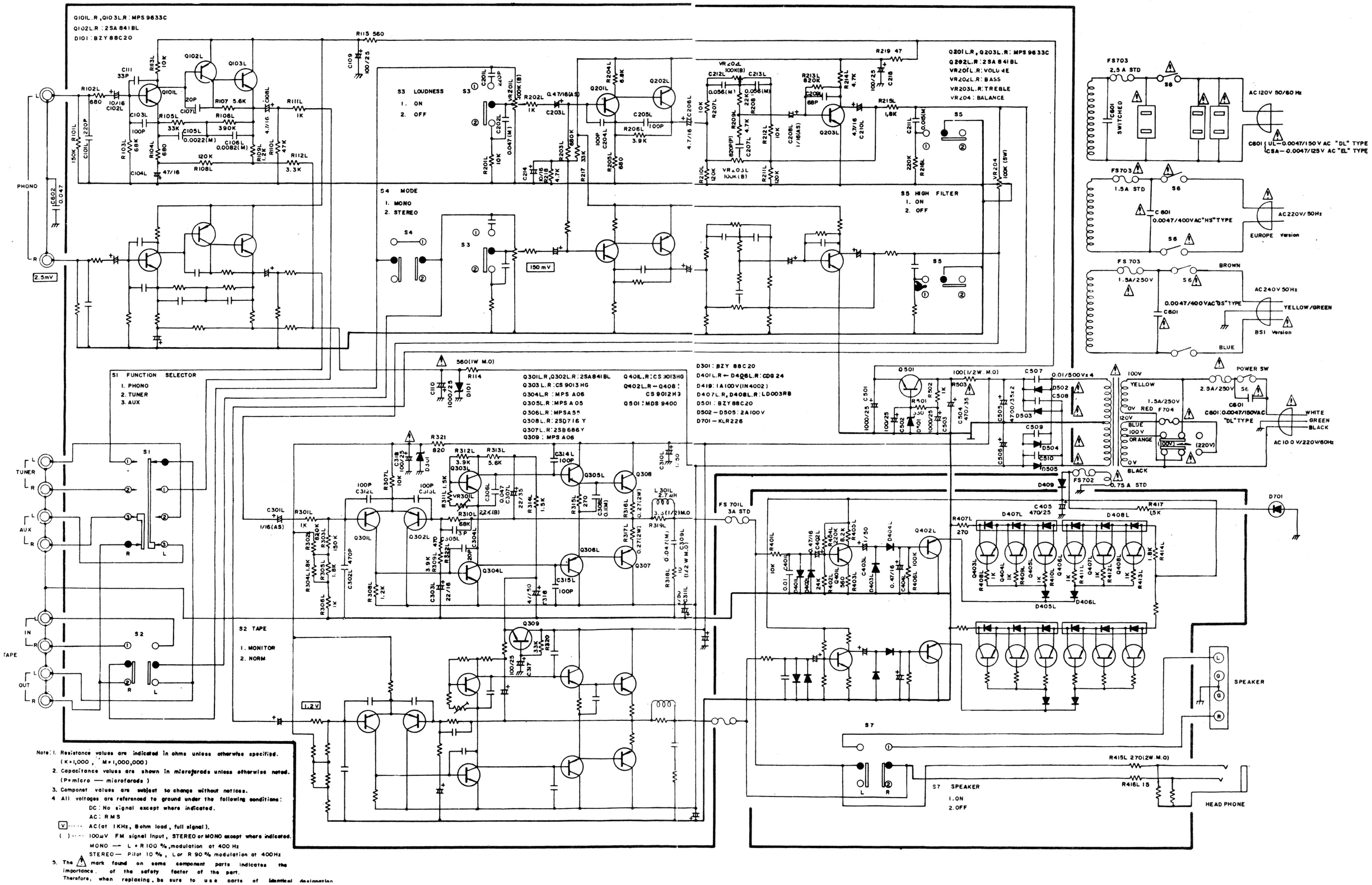

Note: 1. Resistance values are indicated in ohms unless otherwise specified. (K=1,000, M=1,000,000)
2. Capacitance values are shown in microfarads unless otherwise noted. (P=micro — microfarads)
3. Componet values are subject to change without notices.
4. All voltages are referenced to ground under the following conditions:
DC : No signal except where indicated.
AC : RMS
V ····· AC(at 1KHz, 8ohm load, full signal).
( ) ····· 100μV FM signal input, STEREO or MONO except where indicated.
MONO — L = R 100 %, modulation at 400 Hz
STEREO — Pilot 10 %, L or R 90 % modulation at 400Hz
5. The ⚠ mark found on some component parts indicates the importance of the safety factor of the part. Therefore, when replacing, be sure to use parts of identical designation.

www.hifiengine.com