LEADER TEST INSTRUMENTS

MODEL LCT-910A

CRT TESTER/REJUVENATOR

INSTRUCTION MANUAL

LEADER ELECTRONICS CORP.

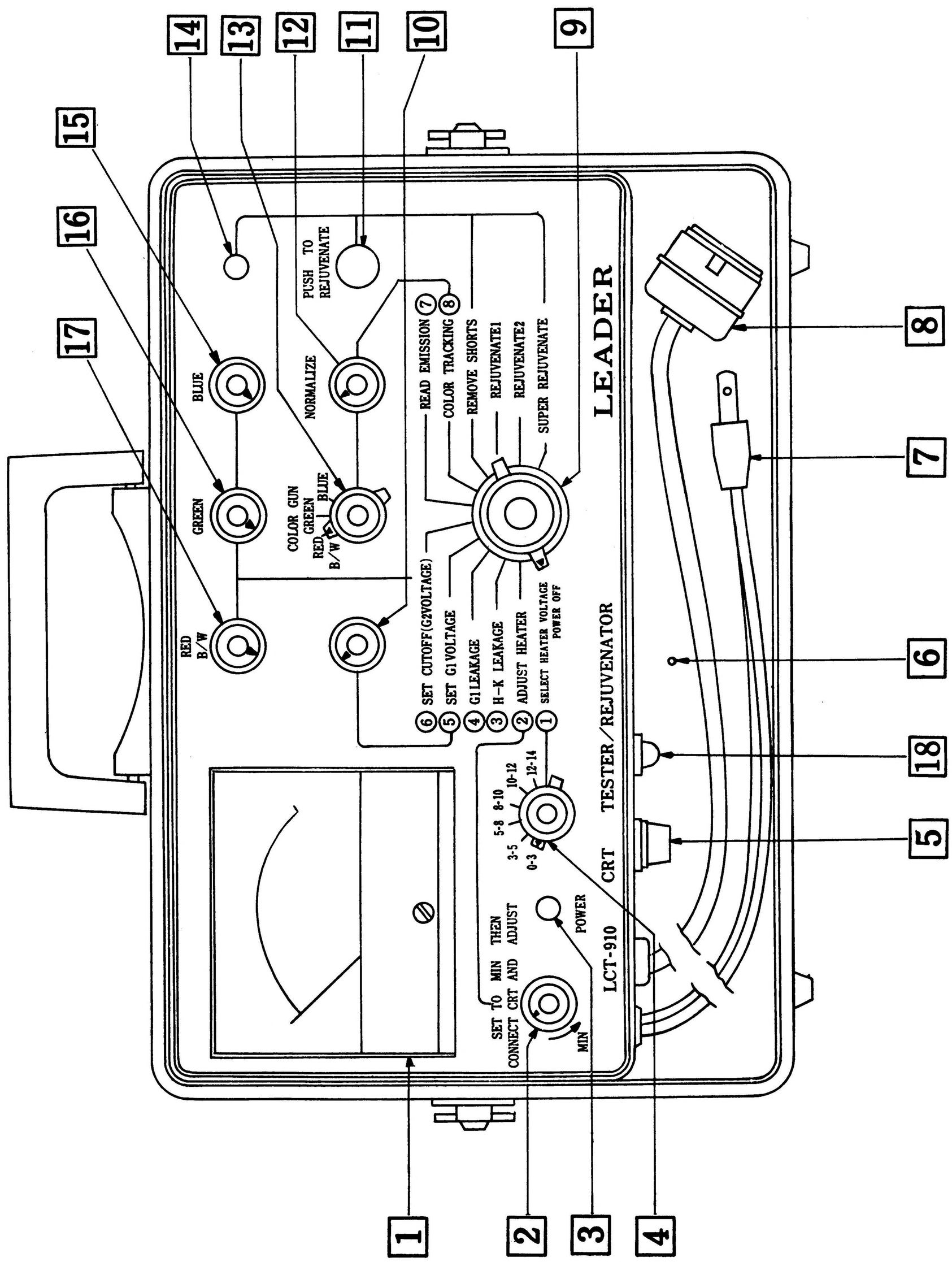
LEADER
TESTER/REJUVENATOR
LCT-910
CRT
PUSH TO REJUVENATE
BLUE
GREEN
RED B/W
NORMALIZE
COLOR GUN
GREEN
BLUE
RED
B/W
READ EMISSION
COLOR TRACKING
REMOVE SHORTS
REJUVENATE1
REJUVENATE2
SUPER REJUVENATE
SET CUTOFF(G2VOLTAGE)
SET G1VOLTAGE
G1LEAKAGE
H-K LEAKAGE
ADJUST HEATER
SELECT HEATER VOLTAGE
POWER OFF
0-3
3-5
5-8
8-10
10-12
12-14
SET TO MIN THEN
CONNECT CRT AND ADJUST
MIN
POWER
1
2
3
4
5
6
7
8
9
10
11
12
13
14
15
16
17
18

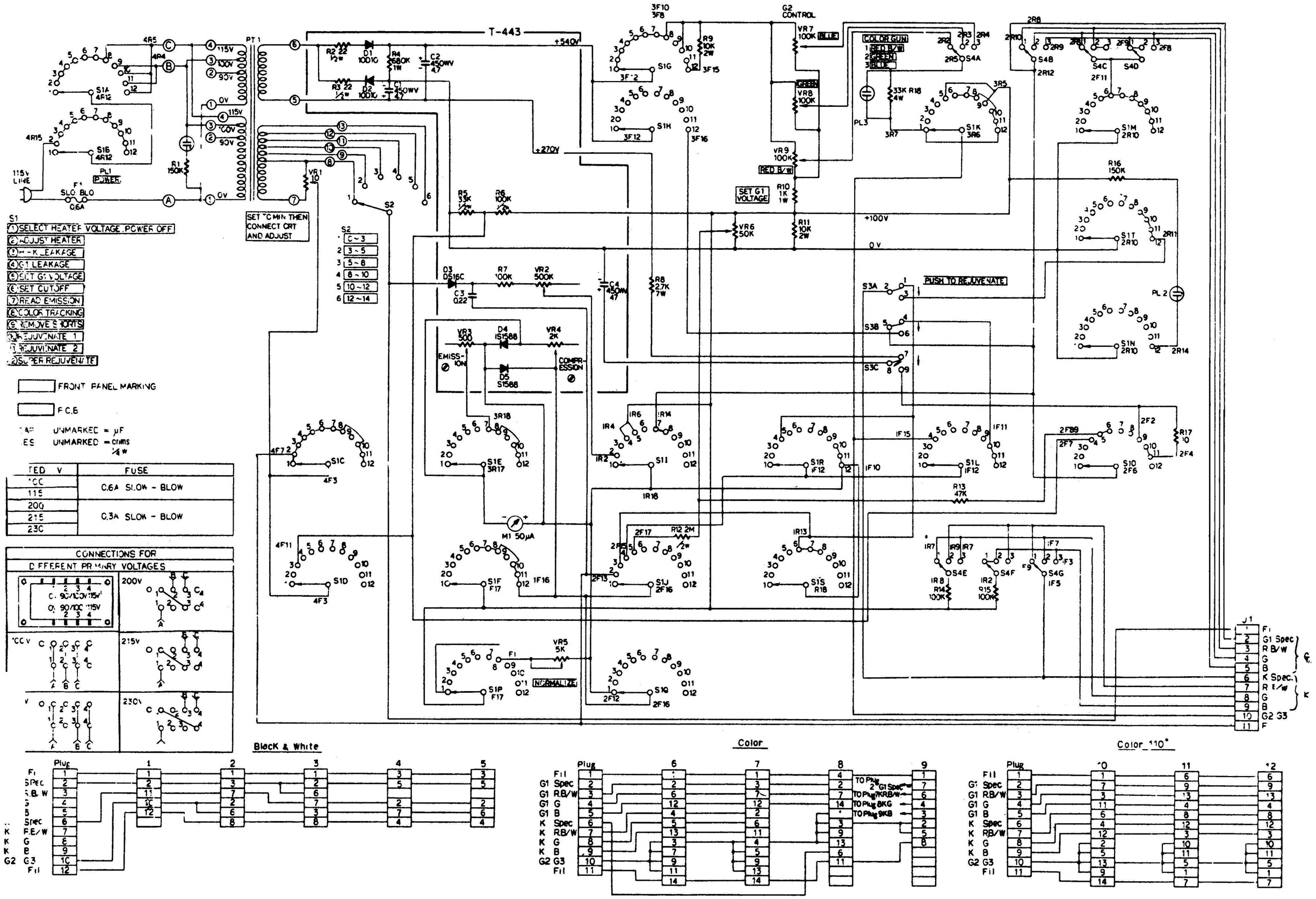

SCHEMATIC 1/1	model LCT-910	0-803A
	CRT TESTER / REJUVENATOR	LEADER ELECTRONICS CORP.

pdf made by DanielK 2015
elektrotanya.com

Scoket adapters NO 6 & NO 9 are not included as standard accessories.

LEADER TEST INSTRUMENTS

LEADER ELECTRONICS CORP.
2-6-33 TSUNASHIMA-HIGASHI, KOHOKU-KU,
YOKOHAMA, JAPAN.
PHONE: (045) 541-2121 TELEX: J47780 JPLEADER

LEADER INSTRUMENTS CORP.
380 OSER AVENUE, HAUPPAUGE, N.Y. 11788 U.S.A.
PHONE: (516) 231-6900
TELEX: 510-227-9669 LEADER HAUP

83071KM

Printed in Japan.