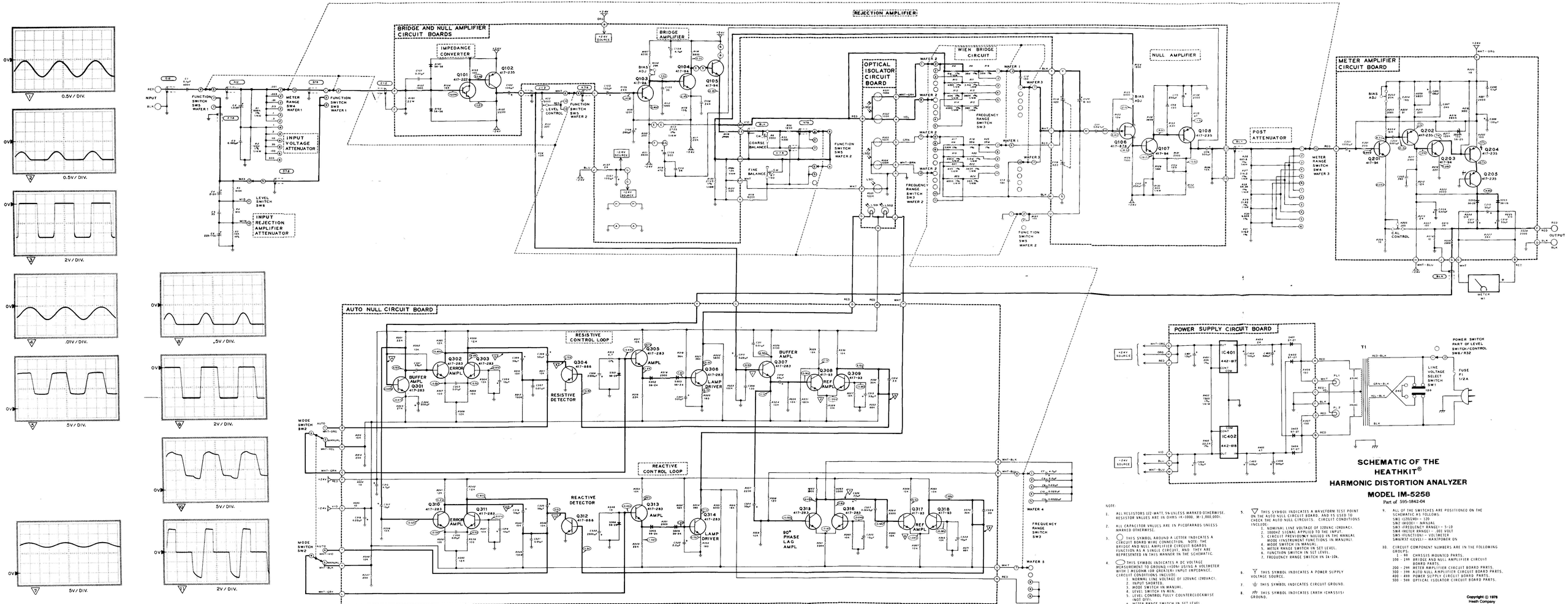


# SCHEMATIC OF THE HEATHKIT® HARMONIC DISTORTION ANALYZER

## MODEL IM-5258

Part of 595-1842-04

NOTE:

1. ALL RESISTORS 1/2-WATT, 5% UNLESS MARKED OTHERWISE. RESISTOR VALUES ARE IN OHMS: K=1000, M=1,000,000.
2. ALL CAPACITOR VALUES ARE IN PICOFARADS UNLESS MARKED OTHERWISE.
3. ◯ THIS SYMBOL AROUND A LETTER INDICATES A CIRCUIT BOARD WIRE CONNECTION. NOTE: THE BRIDGE AND NULL AMPLIFIER CIRCUIT BOARDS FUNCTION AS A SINGLE CIRCUIT, AND THEY ARE REPRESENTED IN THIS MANNER IN THE SCHEMATIC.
4. ◯ THIS SYMBOL INDICATES A DC VOLTAGE MEASUREMENT TO GROUND (±10%) USING A VOLTMETER WITH 2 MEGOHM (OR GREATER) INPUT IMPEDANCE. CIRCUIT CONDITIONS INCLUDE:
   1. NORMAL LINE VOLTAGE OF 120VAC (240VAC).
   2. 1000HZ SIGNAL APPLIED TO THE INPUT.
   3. MODE SWITCH IN MANUAL.
   4. LEVEL SWITCH IN MIN.
   5. LEVEL CONTROL FULLY COUNTERCLOCKWISE (NOT OFF).
   6. METER RANGE SWITCH IN SET LEVEL.
   7. FUNCTION SWITCH IN SET LEVEL.
5. ▽ THIS SYMBOL INDICATES A WAVEFORM TEST POINT ON THE AUTO NULL CIRCUIT BOARD, AND IS USED TO CHECK THE AUTO NULL CIRCUITS. CIRCUIT CONDITIONS INCLUDE:
   1. NORMAL LINE VOLTAGE OF 120VAC (240VAC).
   2. 1000HZ SIGNAL APPLIED TO THE INPUT.
   3. CIRCUIT PREVIOUSLY ADJUSTED IN THE MANUAL MODE, SWITCHING FUNCTIONS IN MANUAL; MODE SWITCH IN MANUAL.
   4. METER RANGE SWITCH IN SET LEVEL.
   5. FUNCTION SWITCH IN SET LEVEL.
   7. FREQUENCY RANGE SWITCH IN 1k-10k.
6. Y THIS SYMBOL INDICATES A POWER SUPPLY VOLTAGE SOURCE.
7. ⏚ THIS SYMBOL INDICATES CIRCUIT GROUND.
8. ⏚ THIS SYMBOL INDICATES EARTH (CHASSIS) GROUND.
9. ALL OF THE SWITCHES ARE POSITIONED ON THE SCHEMATIC AS FOLLOWS:
   SW1 (120/240) – 120
   SW2 (MODE) – MANUAL
   SW3 (FREQUENCY RANGE) – 1–10
   SW4 (METER RANGE) – .001 VOLT
   SW5 (FUNCTION) – VOLTMETER
   SW6/R32 (LEVEL) – MAX/POWER ON
10. CIRCUIT COMPONENT NUMBERS ARE IN THE FOLLOWING GROUPS:
   1 – 99 CHASSIS MOUNTED PARTS.
   100 – 199 BRIDGE AND NULL AMPLIFIER CIRCUIT BOARD PARTS.
   200 – 299 METER AMPLIFIER CIRCUIT BOARD PARTS.
   300 – 399 AUTO NULL AMPLIFIER CIRCUIT BOARD PARTS.
   400 – 499 POWER SUPPLY CIRCUIT BOARD PARTS.
   500 – 599 OPTICAL ISOLATOR CIRCUIT BOARD PARTS.

Copyright © 1978
Heath Company
All Rights Reserved
Printed in the United States of America

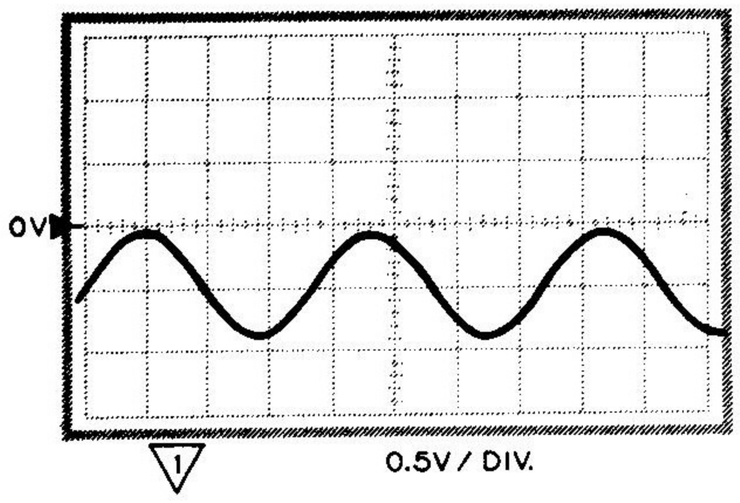
0V
1
0.5V / DIV.

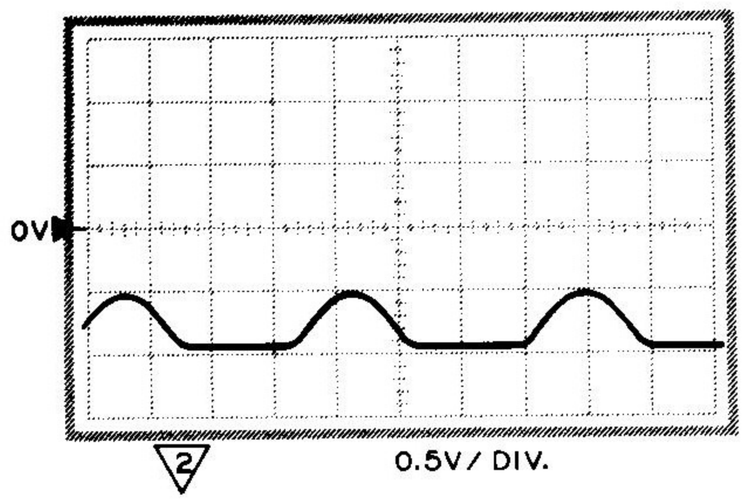
0V
2
0.5V / DIV.

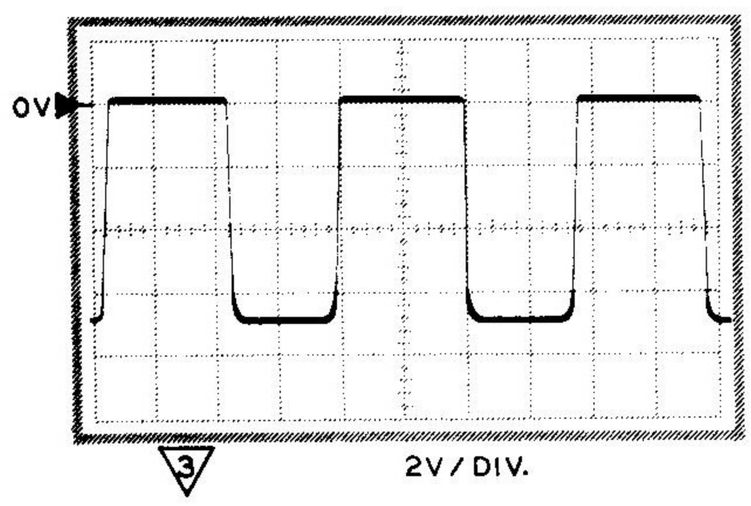
0V
3
2V / DIV.

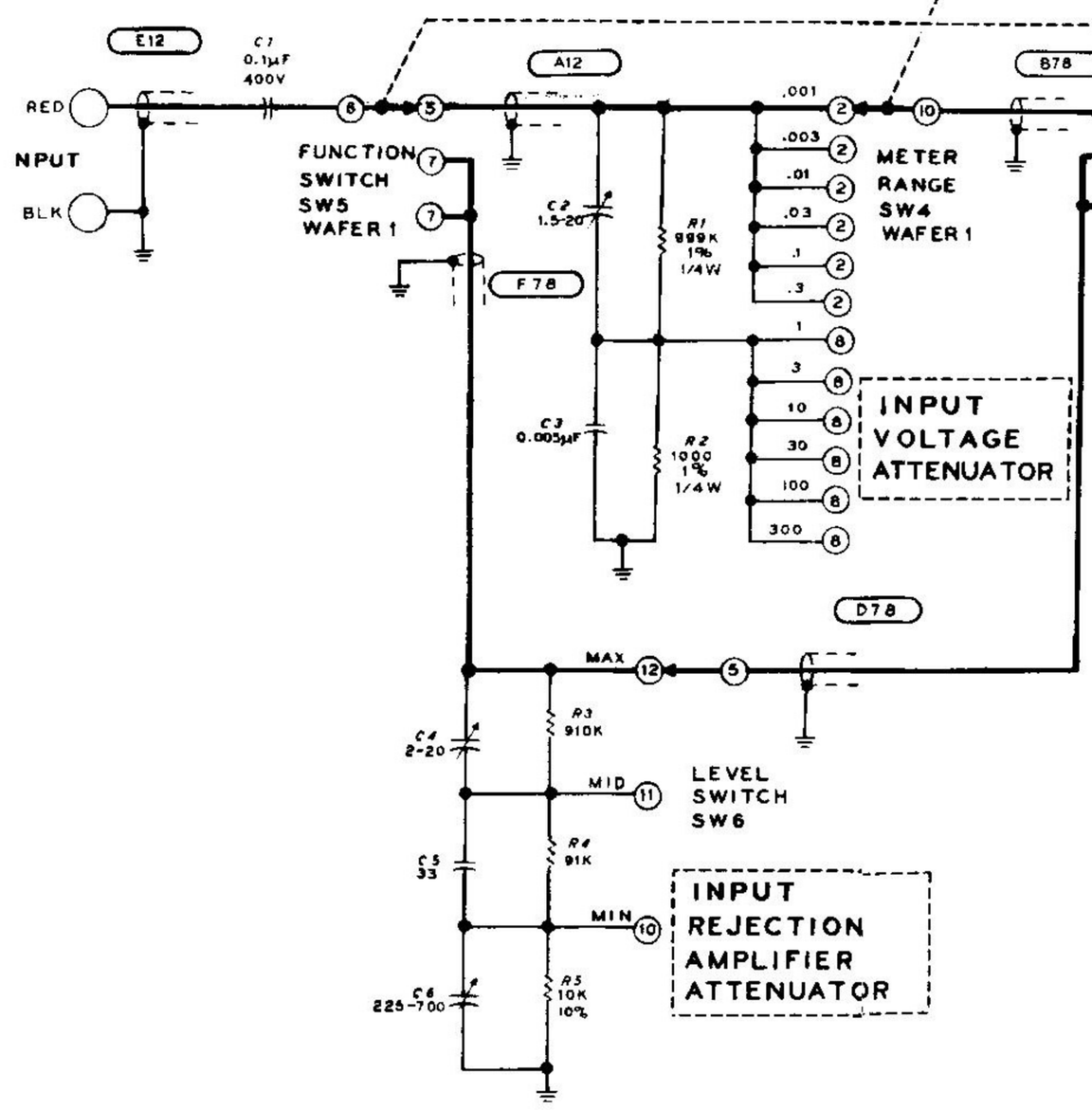
E12
C1
0.1µF
400V
RED
INPUT
BLK
FUNCTION
SWITCH
SW5
WAFER 1
A12
C2
1.5-20
F78
R1
999K
1%
1/4W
.001
.003
.01
.03
.1
.3
1
3
10
30
100
300
METER
RANGE
SW4
WAFER 1
B78
FUNCTION
SWITCH
SW5
WAFER 1
C12
C3
0.005µF
R2
1000
1%
1/4W
INPUT
VOLTAGE
ATTENUATOR
D78
MAX
MID
MIN
C4
2-20
R3
910K
LEVEL
SWITCH
SW6
C5
33
R4
91K
INPUT
REJECTION
AMPLIFIER
ATTENUATOR
C6
225-700
R5
10K
10%

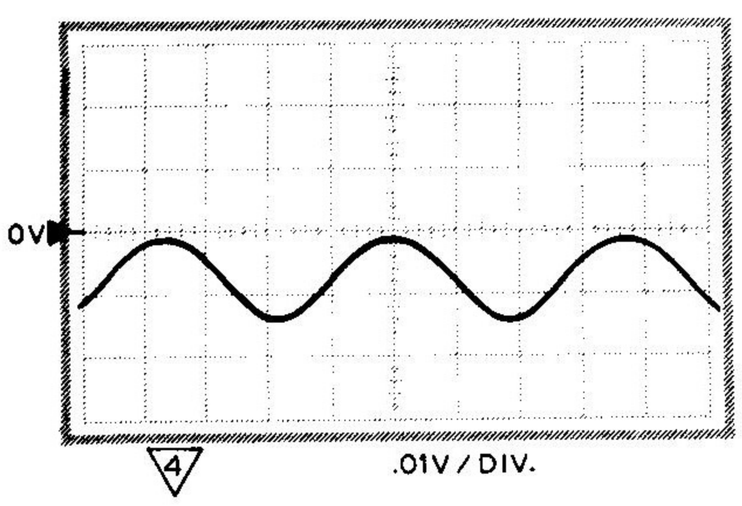
0V
4
.01V / DIV.

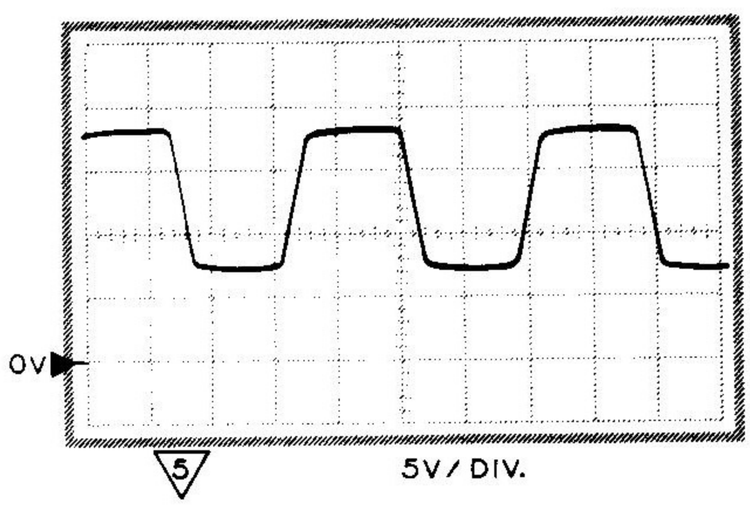
0V
5
5V / DIV.

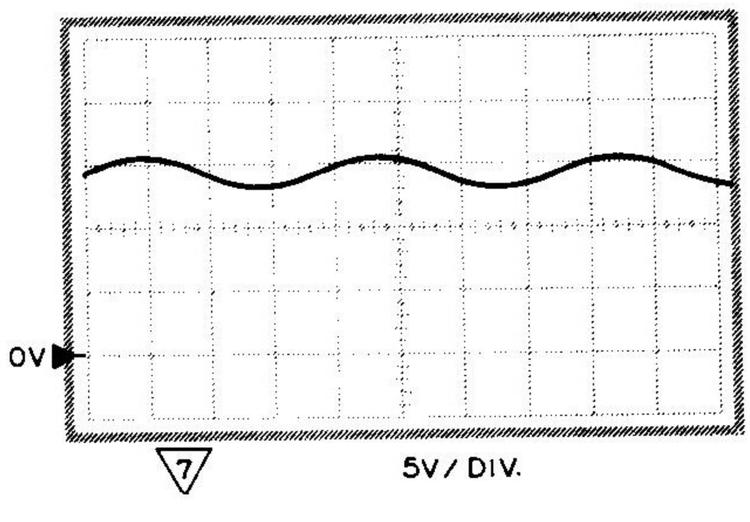
0V
7
5V / DIV.

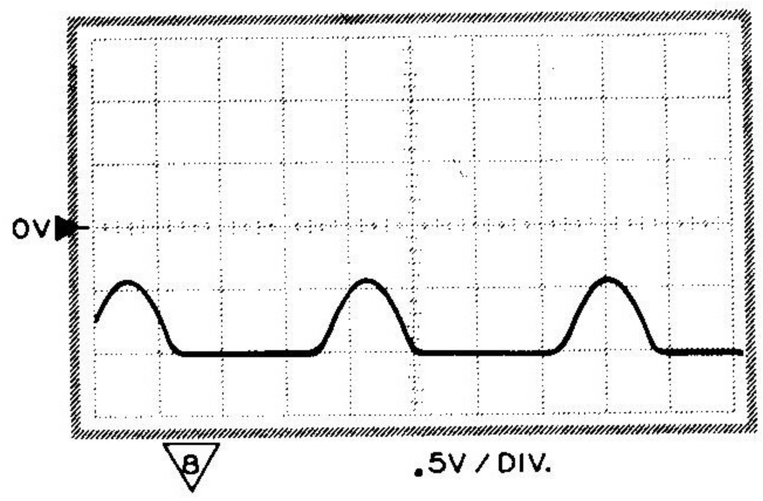
0V
8
.5V / DIV.

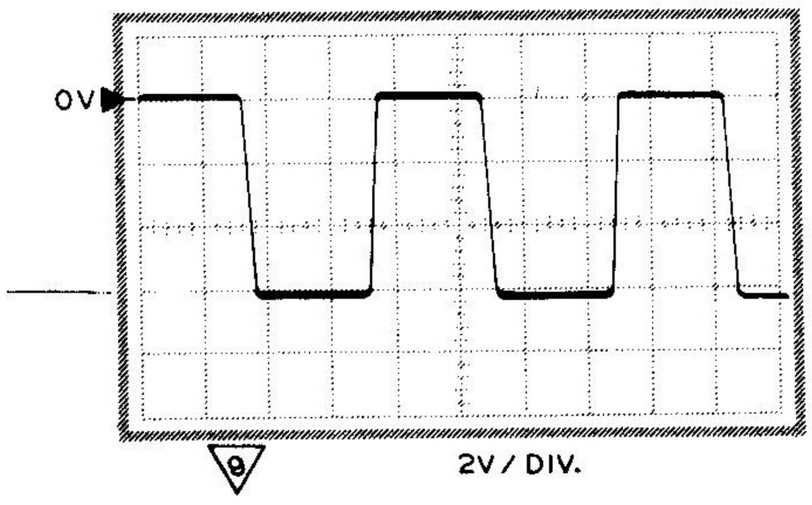
0V
9
2V / DIV.

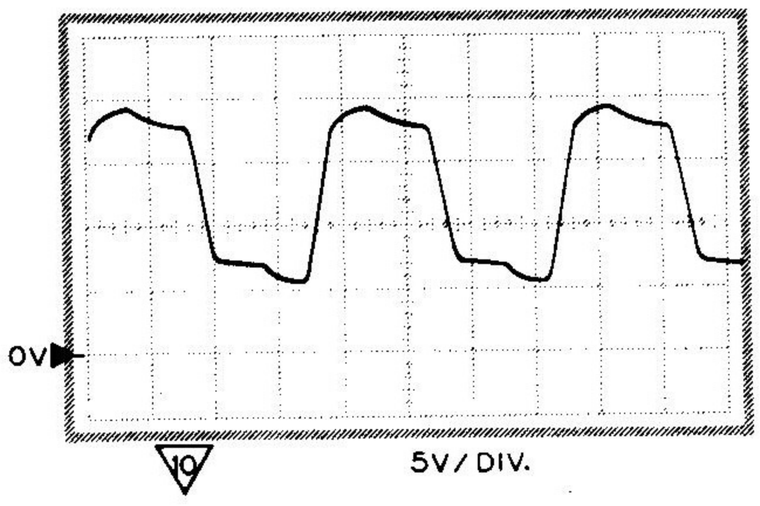
0V
10
5V / DIV.

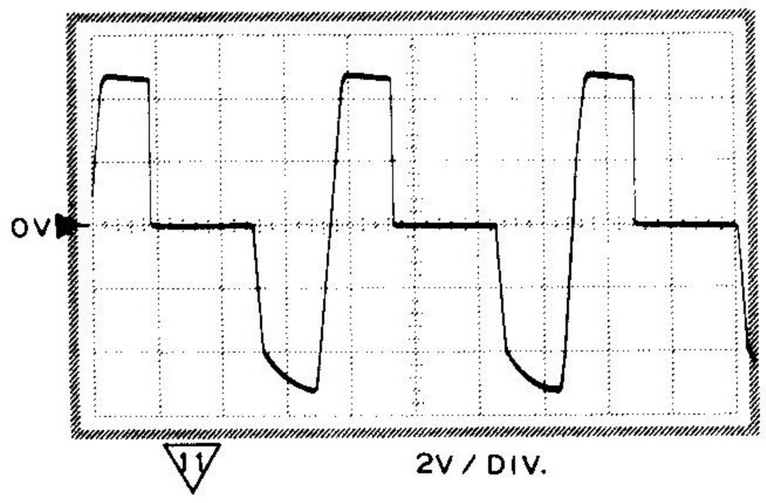
0V
11
2V / DIV.

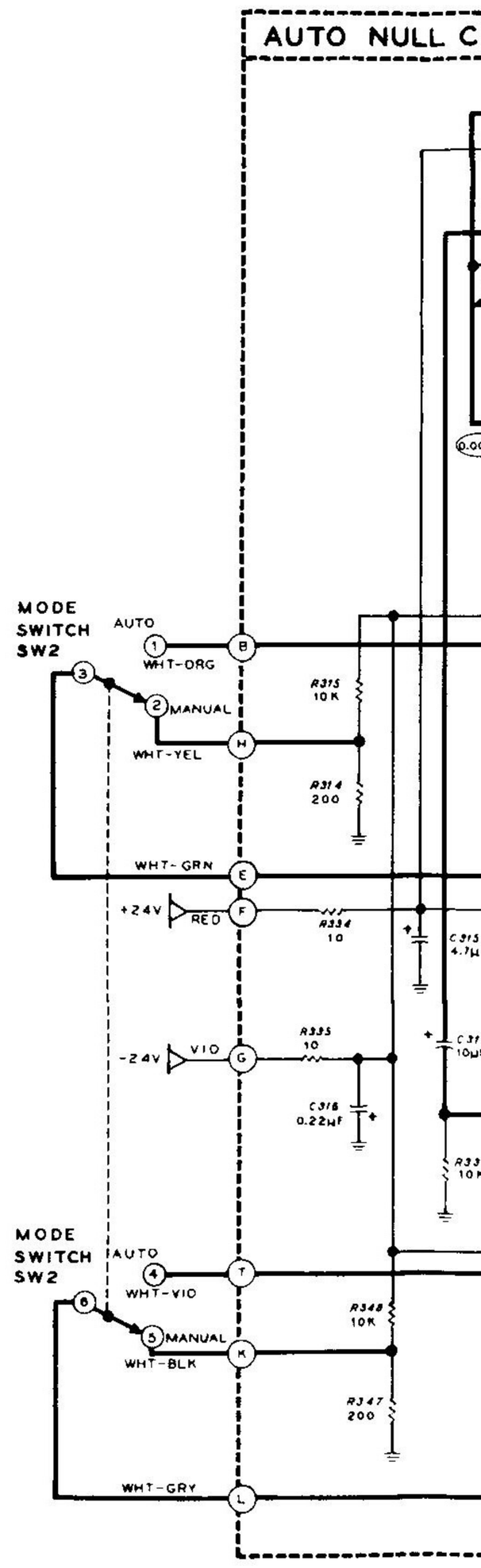
AUTO NULL C
MODE
SWITCH
SW2
AUTO
WHT-ORG
MANUAL
WHT-YEL
R315
10K
R314
200
WHT-GRN
+24V
RED
R334
10
-24V
VIO
R335
10
C316
0.22µF
MODE
SWITCH
SW2
AUTO
WHT-VIO
MANUAL
WHT-BLK
R348
10K
R347
200
WHT-GRY

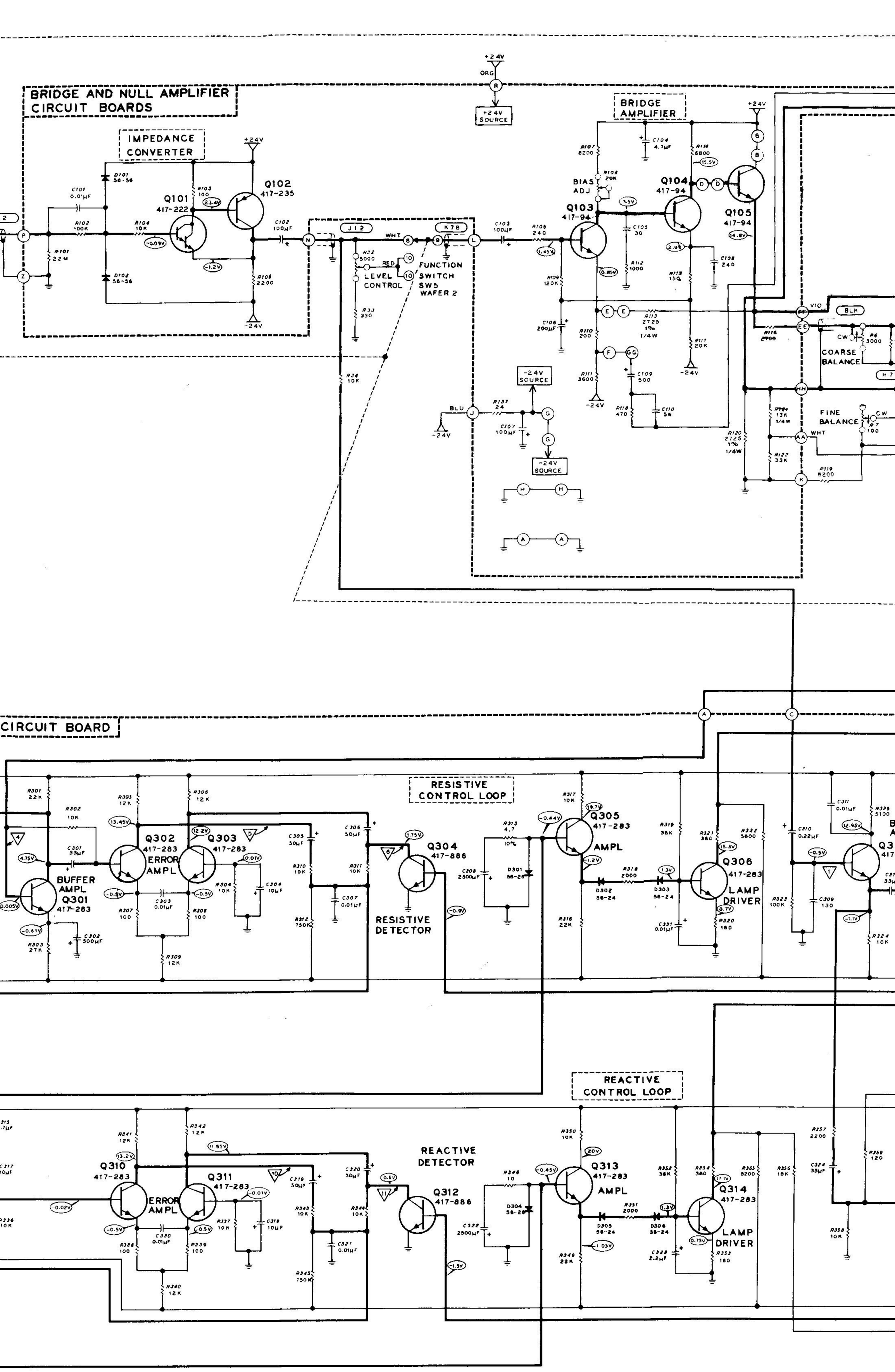
BRIDGE AND NULL AMPLIFIER CIRCUIT BOARDS
IMPEDANCE CONVERTER
Q101 417-222
Q102 417-235
BRIDGE AMPLIFIER
Q103 417-94
Q104 417-94
Q105 417-94
BIAS ADJ
+24V SOURCE
-24V SOURCE
LEVEL CONTROL
FUNCTION SWITCH SW5 WAFER 2
COARSE BALANCE
FINE BALANCE
CIRCUIT BOARD
RESISTIVE CONTROL LOOP
BUFFER AMPL Q301 417-283
Q302 417-283 ERROR AMPL
Q303 417-283
Q304 417-886
RESISTIVE DETECTOR
Q305 417-283 AMPL
Q306 417-283 LAMP DRIVER
REACTIVE CONTROL LOOP
Q310 417-283
Q311 417-283 ERROR AMPL
REACTIVE DETECTOR
Q312 417-886
Q313 417-283 AMPL
Q314 417-283 LAMP DRIVER

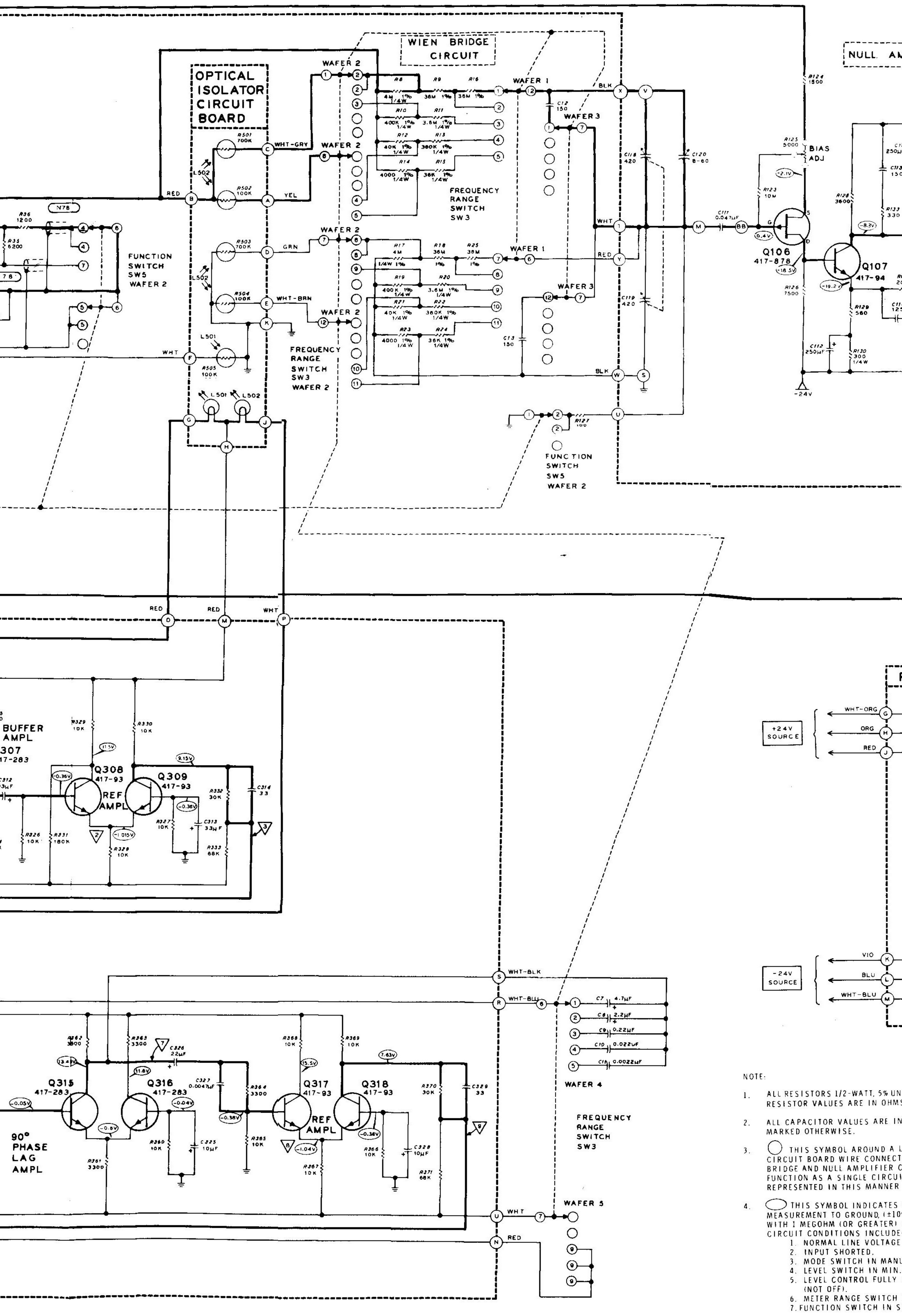


NOTE:

1. ALL RESISTORS 1/2-WATT, 5% UN
RESISTOR VALUES ARE IN OHMS

2. ALL CAPACITOR VALUES ARE IN
MARKED OTHERWISE.

3. ◯ THIS SYMBOL AROUND A L
CIRCUIT BOARD WIRE CONNECT
BRIDGE AND NULL AMPLIFIER C
FUNCTION AS A SINGLE CIRCUI
REPRESENTED IN THIS MANNER

4. ⬭ THIS SYMBOL INDICATES
MEASUREMENT TO GROUND, (±10
WITH 1 MEGOHM (OR GREATER)
CIRCUIT CONDITIONS INCLUDE
1. NORMAL LINE VOLTAGE
2. INPUT SHORTED.
3. MODE SWITCH IN MANU
4. LEVEL SWITCH IN MIN.
5. LEVEL CONTROL FULLY
(NOT OFF).
6. METER RANGE SWITCH
7. FUNCTION SWITCH IN S

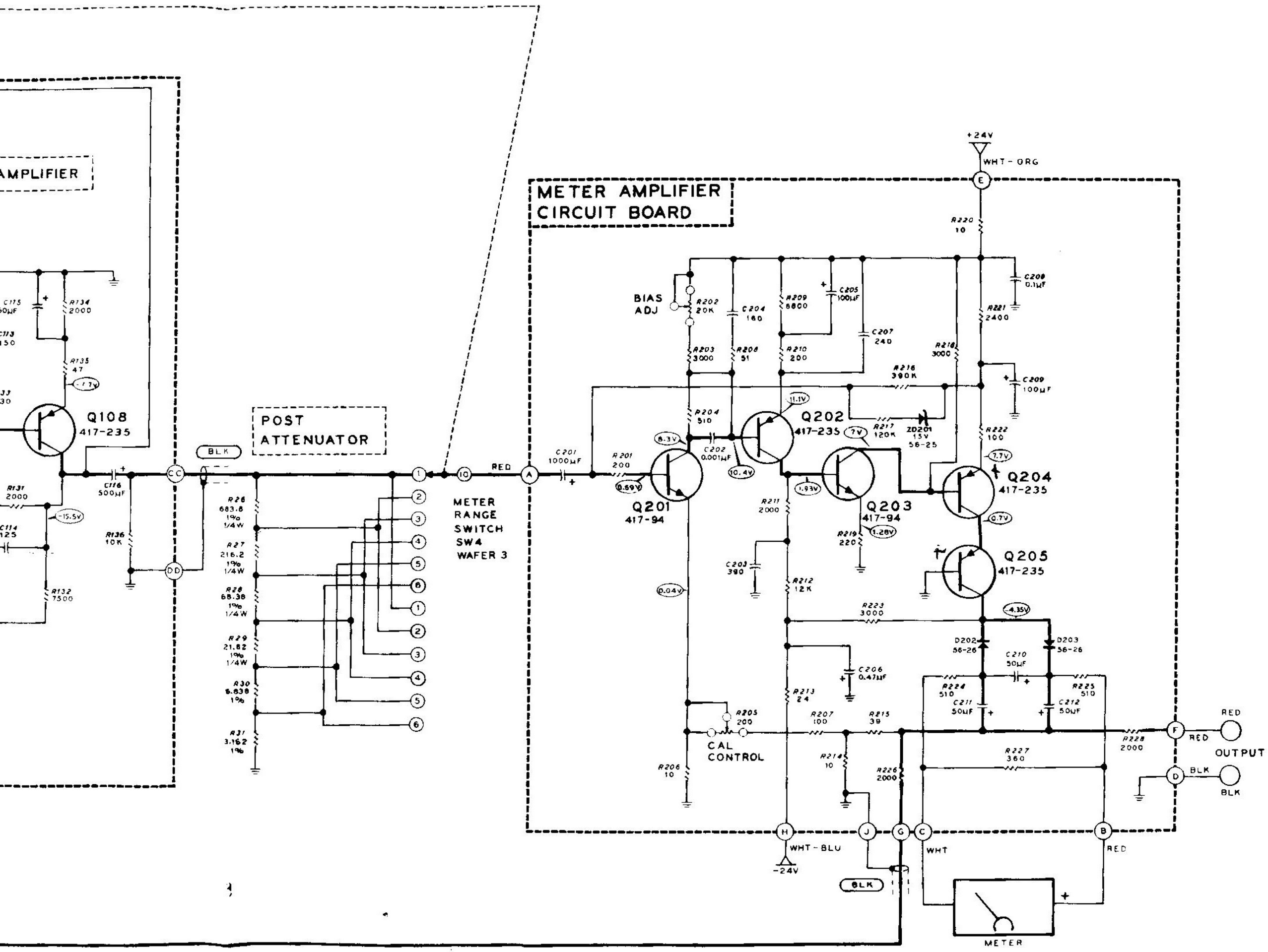


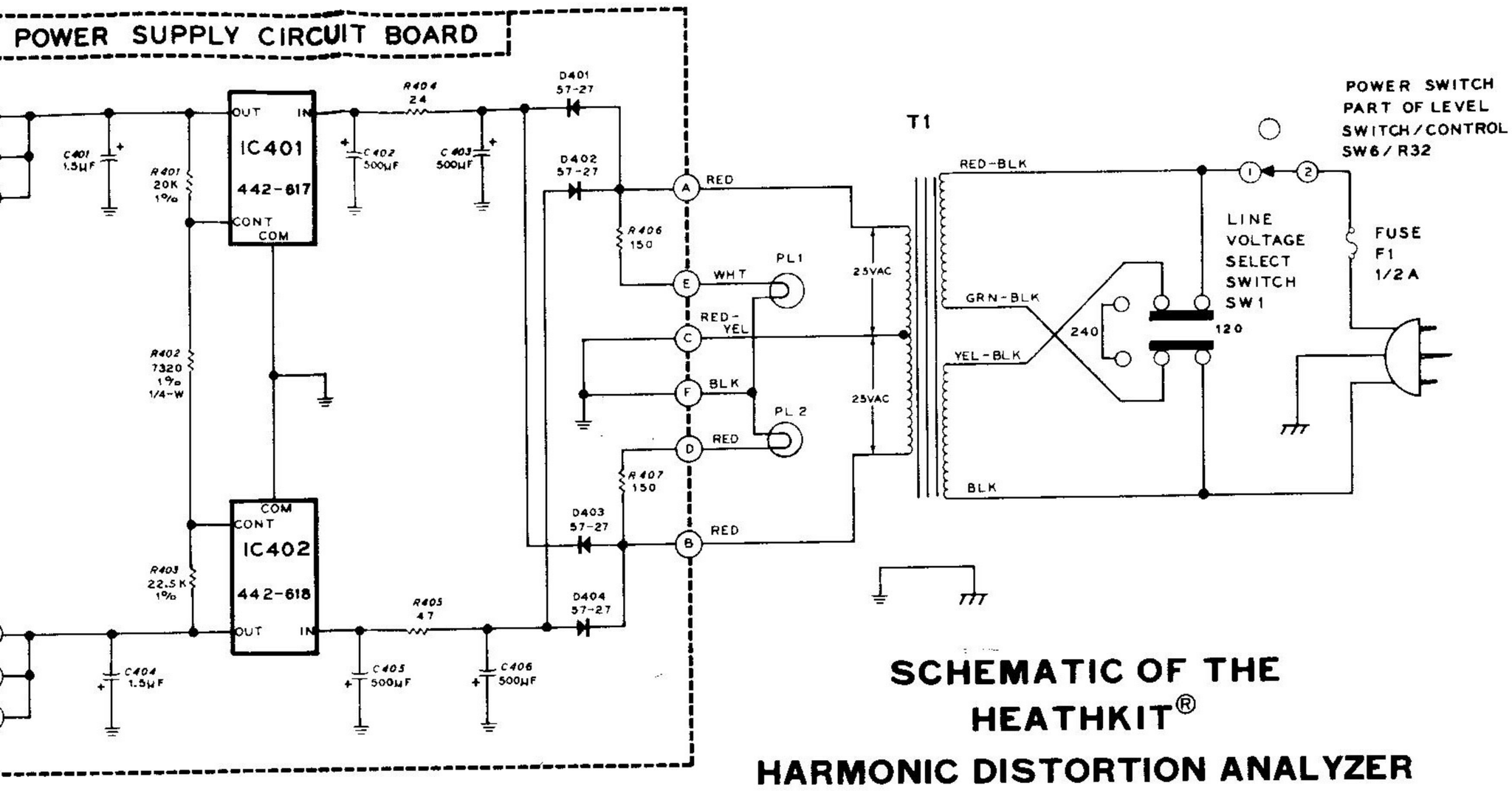


# SCHEMATIC OF THE HEATHKIT® HARMONIC DISTORTION ANALYZER MODEL IM-5258

Part of 595-1842-04

UNLESS MARKED OTHERWISE.
MS (K=1000, M=1,000,000).

IN PICOFARADS UNLESS

A LETTER INDICATES A
CTION. NOTE: THE
CIRCUIT BOARDS
UIT, AND THEY ARE
R IN THE SCHEMATIC.

S A DC VOLTAGE
10%) USING A VOLTMETER
) INPUT IMPEDANCE.
DE:
GE OF 120VAC (240VAC).

NUAL.
N.
Y COUNTERCLOCKWISE

H IN SET LEVEL.
SET LEVEL.

5. ▽ THIS SYMBOL INDICATES A WAVEFORM TEST POINT ON THE AUTO NULL CIRCUIT BOARD, AND IS USED TO CHECK THE AUTO NULL CIRCUITS. CIRCUIT CONDITIONS INCLUDE:
   1. NOMINAL LINE VOLTAGE OF 120VAC (240VAC).
   2. 1000HZ SIGNAL APPLIED TO THE INPUT.
   3. CIRCUIT PREVIOUSLY NULLED IN THE MANUAL MODE (INSTRUMENT FUNCTIONS IN MANUAL).
   4. MODE SWITCH IN MANUAL.
   5. METER RANGE SWITCH IN SET LEVEL.
   6. FUNCTION SWITCH IN SET LEVEL.
   7. FREQUENCY RANGE SWITCH IN 1k-10k.

6. Y THIS SYMBOL INDICATES A POWER SUPPLY VOLTAGE SOURCE.

7. ⏚ THIS SYMBOL INDICATES CIRCUIT GROUND.

8. ⏚ THIS SYMBOL INDICATES EARTH (CHASSIS) GROUND.

9. ALL OF THE SWITCHES ARE POSITIONED ON THE SCHEMATIC AS FOLLOWS:
   SW1 (120/240) - 120
   SW2 (MODE) - MANUAL
   SW3 (FREQUENCY RANGE) - 5-10
   SW4 (METER RANGE) - .001 VOLT
   SW5 (FUNCTION) - VOLTMETER
   SW6/R32 (LEVEL) - MAX/POWER ON

10. CIRCUIT COMPONENT NUMBERS ARE IN THE FOLLOWING GROUPS:
   1 - 99 CHASSIS MOUNTED PARTS.
   100 - 199 BRIDGE AND NULL AMPLIFIER CIRCUIT BOARD PARTS.
   200 - 299 METER AMPLIFIER CIRCUIT BOARD PARTS.
   300 - 399 AUTO NULL AMPLIFIER CIRCUIT BOARD PARTS.
   400 - 499 POWER SUPPLY CIRCUIT BOARD PARTS.
   500 - 599 OPTICAL ISOLATOR CIRCUIT BOARD PARTS.

Copyright © 1976
Heath Company
*All Rights Reserved*
Printed in the United States of America