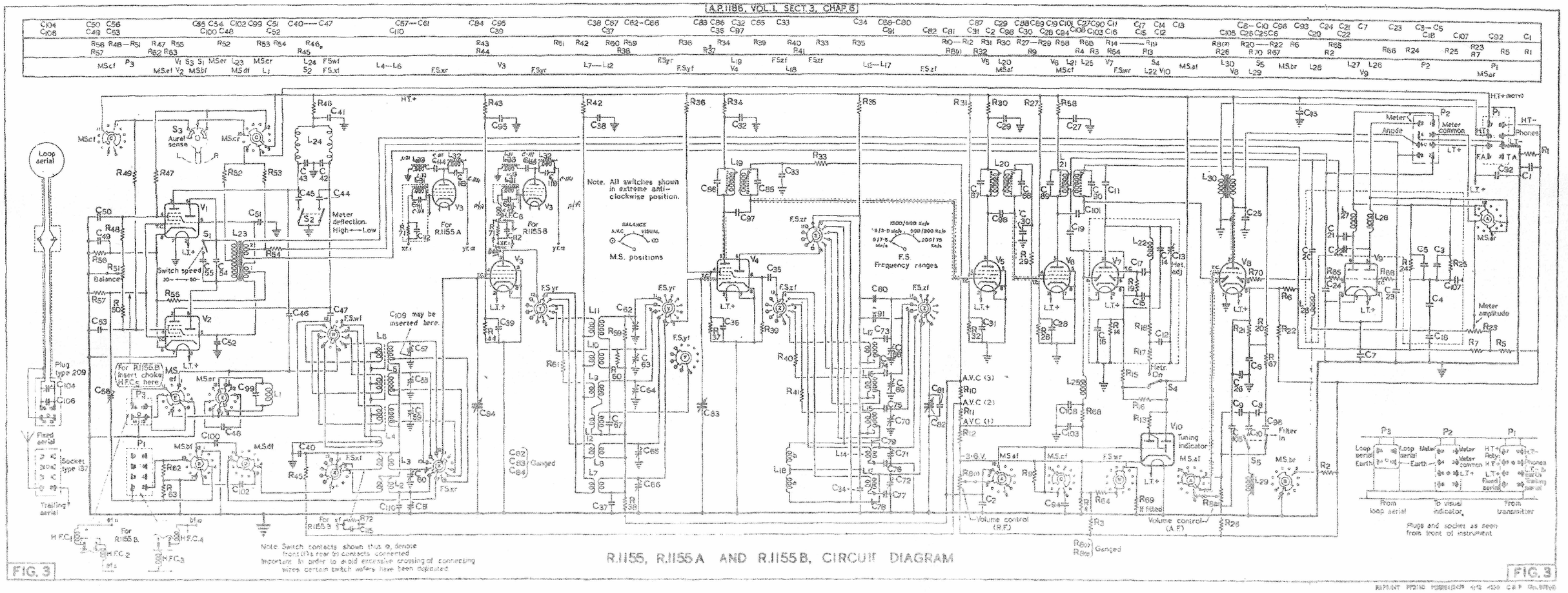

R.1155, R.1155 A AND R.1155 B, CIRCUIT DIAGRAM

FIG. 3

FIG. 3

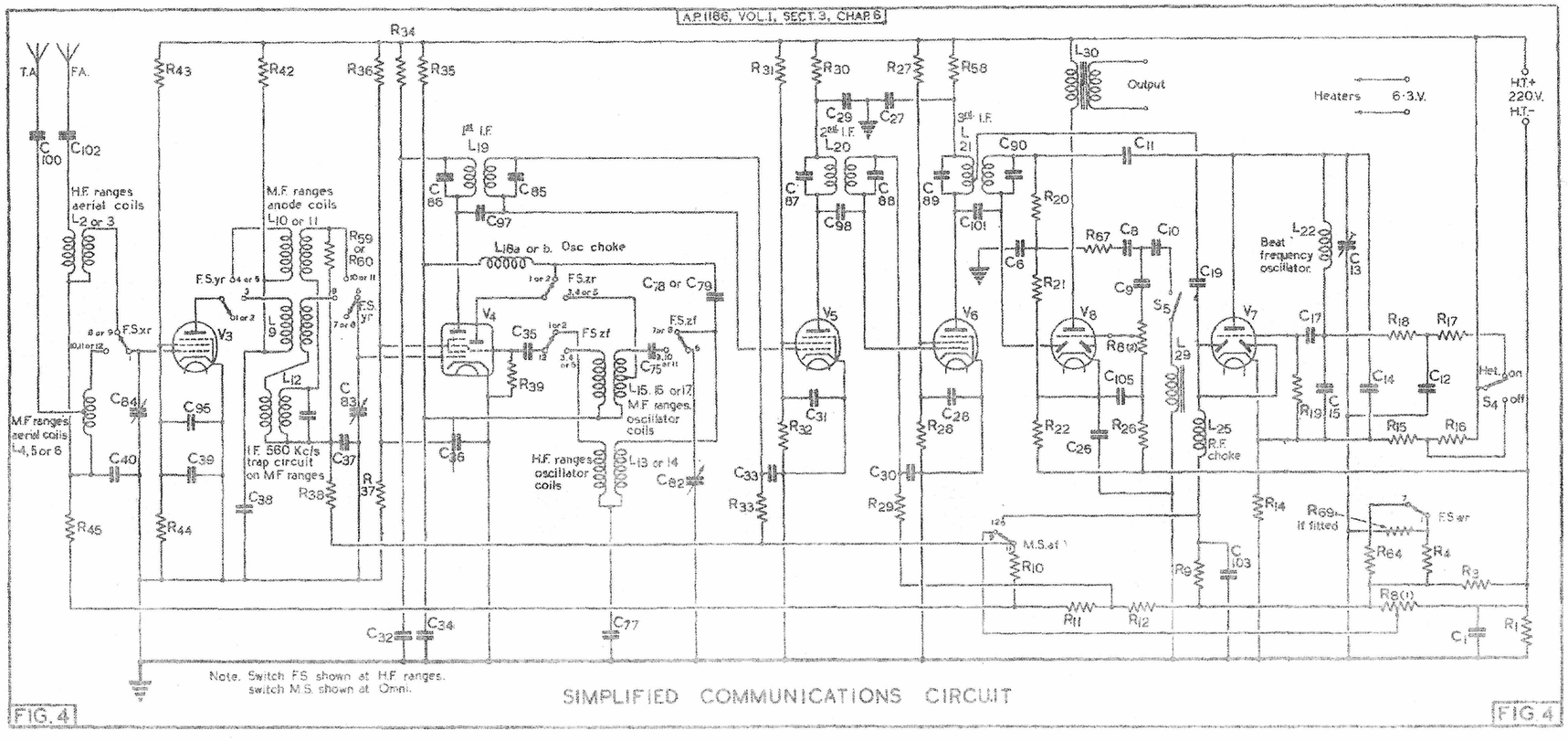

FIG. 4

SIMPLIFIED COMMUNICATIONS CIRCUIT

FIG. 4

This table should be read in conjunction with fig. 3

COMPONENT LIST FOR R.1155, R.1155A AND R.1155B

CONDENSERS

Annotation	Value	Stores Ref	Type
C_1*	2·5μF	10C/960	892
C_2	2 × 0·1μF	10C/961 or 10C/3399	893 1662
C_3†	2·5μF	10C/962	894
C_4†.	10μF		
C_5†	20μF		
C_6	0·0001μF	10C/963 or 10C/2155	895 995
C_7	0·005μF	10C/964 10C/4256	896 2201
C_8	0·001μF	10C/965	897
C_9	0·001μF	10C/965	897
C_{10}	0·004μF	10C/966	898
C_{11}	0·0001μF	10C/963 or 10C/2155	895 995
C_{12}	0·1μF	10C/967	899
C_{13}	75μμF	10C/968 (1st 1,000)	900
	60μμF	10C/3129 (after)	1525
C_{14}	1,600μμF	10C/969 (2 off)	901
C_{15}	4,550μμF	10C/2005	917
C_{16}	0·5μF	10C/970 or 10C/3401	902 1664
C_{17}	0·0001μF	10C/2006	918
C_{18}	0·005μF	10C/964 or 10C/4256	896 2201
C_{19}	0·001μF	10C/651	782
C_{20}	0·005μF	10C/964 or 10C/4256	896 2201
C_{21}	0·005μF	10C/964 or 10C/4256	896 2201
C_{22}	0·005μF	10C/964 or 10C/4256	896 2201
C_{23}	0·005μF	10C/964 or 10C/4256	896 2201
C_{24}	0·005μF	10C/964 or 10C/4256	896 2201
C_{25}	0·001μF	10C/651	782
C_{26}	0·1μF	10C/961 or 10C/3399 with C_{28}	893 1662
C_{27}	0·1μF		
C_{28}	0·1μF		
C_{29}	0·1μF	10C/961 or 10C/3399	893 1662
C_{30}	0·1μF		
C_{31}	0·1μF		
C_{32}	0·1μF	10C/961 or 10C/3399 with C_{28}	893 1662
C_{33}	0·1μF		
C_{34}	0·1μF	10C/967	899
C_{35}	0·0002μF	10C/972 or 10C/2719	904 1322
C_{36}	0·1μF	with C_{32}, C_{38}	
C_{37}	0·1μF	10C/967	899
C_{38}	0·1μF	10C/967	899
C_{39}	0·1μF	10C/3399	893
C_{40}	0·1μF	10C/967	899
C_{41}	0·1μF	with C_{48}, C_{50}	
C_{42}	25μμF	10C/2007	919
C_{43}	25μμF	10C/2007	919
C_{44}	240μμF	10C/2008	920
C_{45}	240μμF	10C/2008	920
C_{46}	80μμF	10C/2009	921
C_{47}	80μμF	10C/2009	921
C_{48}	200μμF	10C/2010	922
C_{49}	0·1μF	10C/961 or 10C/3399 with C_{41}	893 1662
C_{50}	0·1μF		

Annotation	Value	Stores Ref.	Type
C_{51}	0·1μF	10C/961 or 10C/3399	893 1662
C_{52}	0·1μF		
C_{53}	0·1μF		
C_{54}	0·04μF	10C/973 or 10C/4257	905 2202
C_{55}	0·5μF	10C/970 or 10C/3401	902 1664
C_{56}	max. 8–115μμF or 8–105μμF	10C/974 or 10C/3402	906 1665
C_{57}	4–40μμF	10C/3173	Unit type 34
C_{58}	4–40μμF		
C_{59}	4–40μμF		
C_{60}	4–40μμF		
C_{61}	4–40μμF		
C_{62}	4–40μμF		
C_{63}	4–40μμF		
C_{64}	4–40μμF	10C/3173	Unit type 34
C_{65}	4–40μμF		
C_{66}	4–40μμF		
C_{67}	2,000μμF	10C/2011	923
C_{68}	4–40μμF	10C/3174	Unit type 35
C_{69}			
C_{70}			
C_{71}	5–40μμF	10C/976	908
C_{72}	5–40μμF	10C/976	908
C_{73}	93μμF	10C/2012	924
C_{74}	255μμF	10C/2013	925
C_{75}	537μμF	10C/2014	926
C_{76}	1,670μμF	10C/2015	927
C_{77}	6,170μμF	10C/2016	928
C_{78}	20μμF	10C/10948	429
C_{79}	15μμF	10C/978	910
C_{80}	10μμF	10C/977 (1st 1,000)	909
	25μμF	10C/3027 (after)	1439
C_{81}	15-cms.	10C/978	910
C_{82}	Ganged tuner	10C 584 (1st 1,000)	770
C_{83}			
C_{84}		10C/3028 (after)	1440
C_{85}	300μμF	10C/2017	929
C_{86}	300μμF	10C/2017	929
C_{87}	300μμF	10C/2017	929
C_{88}	300μμF	10C/2017	929
C_{89}	600μμF	10C/971	903
C_{90}	300μμF	10C/2017	929
C_{91}	40μμF	10C/853	858
C_{92}*	2·5μF	10C/960	892
C_{93}	4·0μF	10C/979	911
C_{94}*	1·0μF	10C/960	892
C_{95}	0·5μF	10C/970 or 10C/3401	902 1664
C_{96}	0·02μF	10C/2000 or 10C/4258	912 2203
C_{97}	2μμF	10C/2001	913
C_{98}	2μμF	10C/2001	913
C_{99}	100μμF	10C/2006	918
C_{100}	200μμF	10C/2010	922
C_{101}	4μμF	10C/2002	914
C_{102}	0·001μF	10C/651	782
C_{103}	0·005μF	10C/964 or 10C/4256	896 2201
C_{104}	75μμF. var.	10C/968	900
C_{105}	0·1μF.	10C/2003	915
C_{106}	65μμF	10C/2649	1265
C_{107}	0·1μF	10C/2003	915

Annotation	Value	Stores Ref.	Type	Annotation	Value	Stores Ref.	Type
C_{108}	0·0002μF	10C/972 or 10C/2719	904 1322	C_{111}‖	160$\mu\mu$F	10C/4923	2613
C_{109}‡	10 cms.			C_{112}‖	30$\mu\mu$F	10C/4922	2612
C_{110}	40$\mu\mu$F	10C/853	858	C_{113}‖	160$\mu\mu$F	10C/4923	2613
				C_{114}‖	8$\mu\mu$F	10C/3860	1949

NOTES

* $C_1 + C_{92} + C_{94}$ Block † $C_3 + C_4 + C_5$ Block ‡ In early receivers ‖ In R.1155A and R.1155B

RESISTANCES

Annotation	Value in ohms	Stores Ref. No.	Type	Annotation	Value in ohms	Stores Ref. No.	Type
R_1	2,000 or 4,700	10C/1001	1,001	R_{37}	22,000	10C/1010	1,010
				R_{38}	100,000	10C/993	993
R_2	1,200	10C/1002	1,002	R_{39}	56,000	10C/1008	1,008
R_3	1,200	10C/1002	1,002	R_{40}	1,500	10C/1082	1,082
R_4	120	10C/1003	1,003	R_{41}	1,500	10C/1082	1,082
R_5	1,000	10C/11667	500	R_{42}	2,200	10C/691	875
R_6	1,500	10C/124	592	R_{43}	27,000	10C/1006	1,006
R_7	270	10C/1505	1,505	R_{44}	22,000	10C/1010	1,010
$R_8(1)$	50,000	10C/1000 dual pot.	1,000	R_{45}	100,000	10C/993	993
$R_8(2)$	500,000			R_{46}	1,500	10C/1082	1,082
R_9	2 M	10C/1004	1,004	R_{47}	27,000	10C/1006	1,006
R_{10}	150,000	10C/11382	478	R_{48}	6,800 or 3,300	10C/991 10C/1464	991 1,464
R_{11}	150,000	10C/11382	478				
R_{12}	27,000	10C/1005	1,005	R_{49}	27,000	10C/1006	1,006
R_{13}	1 M	10C/11384	480	R_{50}	6,800 or 3,300	10C/991 10C/1464	991 1,464
R_{14}	1,000	10C/11667	500				
R_{15}	30,000	10C/1007	1,007	R_{51}	20,000 pot	10C/999	999
R_{16}	27,000	10C/1006	1,006	R_{52}	6,800	10C/991	991
R_{17}	1,500	10C/1082	1,082	R_{53}	560,000	10C/992	992
R_{18}	10,000	10C/777	906	R_{54}	56,000	10C/1008	1,008
R_{19}	56,000	10C/1008	1,008	R_{55}	56,000	10C/1008	1,008
R_{20}	56,000	10C/1008	1,008	R_{56}	240	10C/995	995
R_{21}	470,000	10C/989	989	R_{57}	560,000	10C/992	992
R_{22}	1,000	10C/11667	500	R_{58}	2,200	10C/691	875
R_{23}	20,000 (min. 6,000)	10C/998	998	R_{59}	220,000	10C/648	855
				R_{60}	220,000	10C/648	855
R_{24}	22,000	10C/1010	1,010	R_{61}	1,200	10C/1081	1,081
R_{25}	22,000	10C/1010	1,010	R_{62}	2·2 M	10C/996	996
R_{26}	100,000	10C/993	993	R_{63}	2·2 M	10C/996	996
R_{27}	27,000	10C/1006	1,006	R_{64}	200 or 100	10C/1634 10C/2006	1,634 918
R_{28}	22,000	10C/1010	1,010				
R_{29}	100,000	10C/993	993	R_{65}	10,000	10C/11671	505
R_{30}	2,200	10C/691	875	R_{66}	10,000	10C/11671	505
R_{31}	27,000	10C/1006	1,006	R_{67}	22,000	10C/1278 or 10C/1010	1,278 1,010
R_{32}	22,000	10C/1010	1,010				
R_{33}	100,000	10C/993	993	R_{68}	56,000	10C/1008	1,008
R_{34}	2,200	10C/691	875	R_{69}	100	10C/2006	918
R_{35}	22,000	10C/1010	1,010	R_{70}	1,000	10C/11667	500
R_{36}	27,000	10C/1006	1,006	R_{71}*	150,000		

NOTES

R_1 normally 2,000 ohms but in certain receivers 4,700 ohms.

R_{66} is 100 ohms : R_{69} (100 ohms) fitted.

R_{48}, R_{50} are 6,800 ohms but in certain receivers 3,300 ohms.

* In R.1155A and R.1155B.

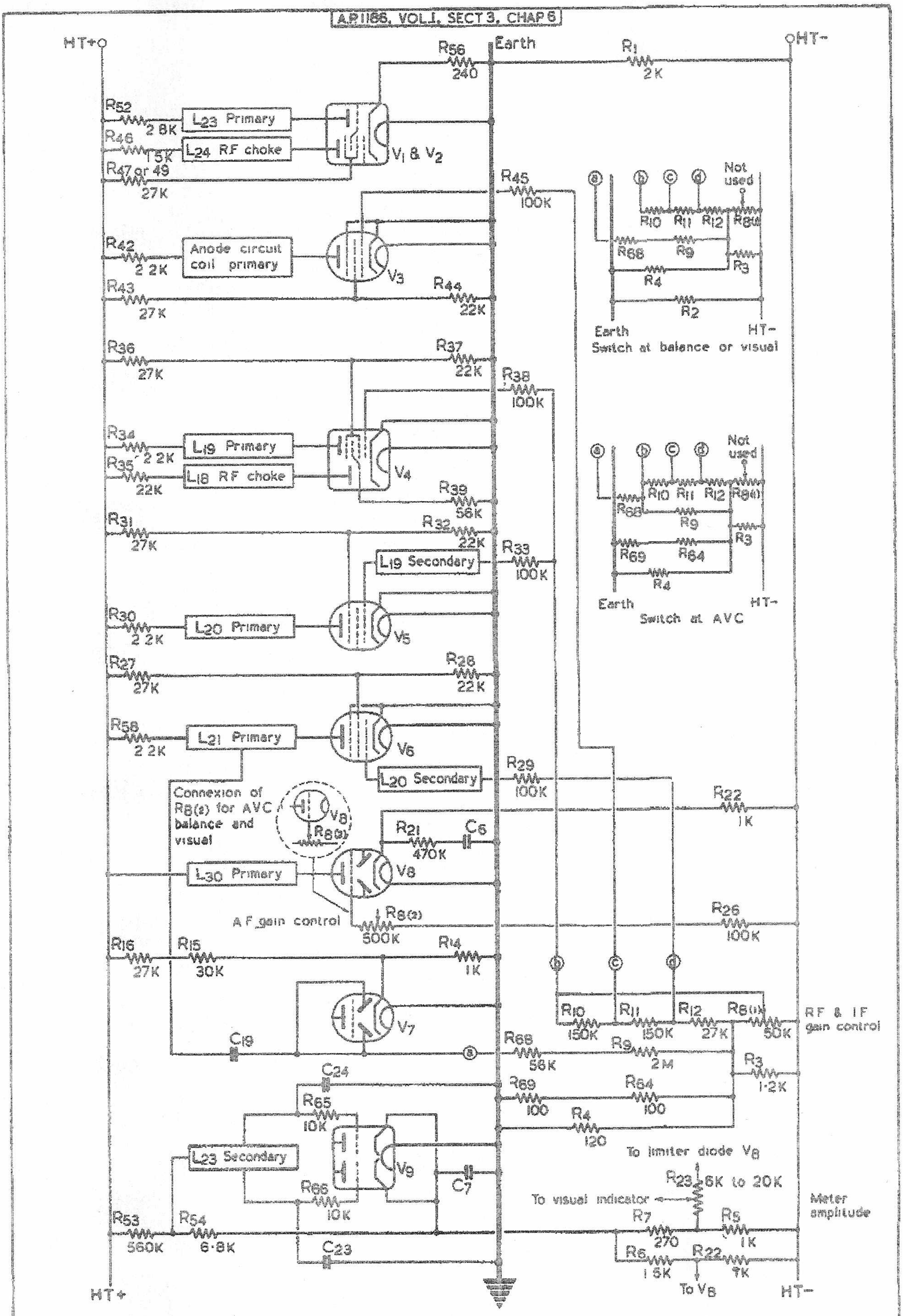

FIG. 7 BIASING AND FEED ARRANGEMENTS FIG. 7

REPRINT FP2150 M28881/2459 4/43 4250 C & P Gp. 939(4)

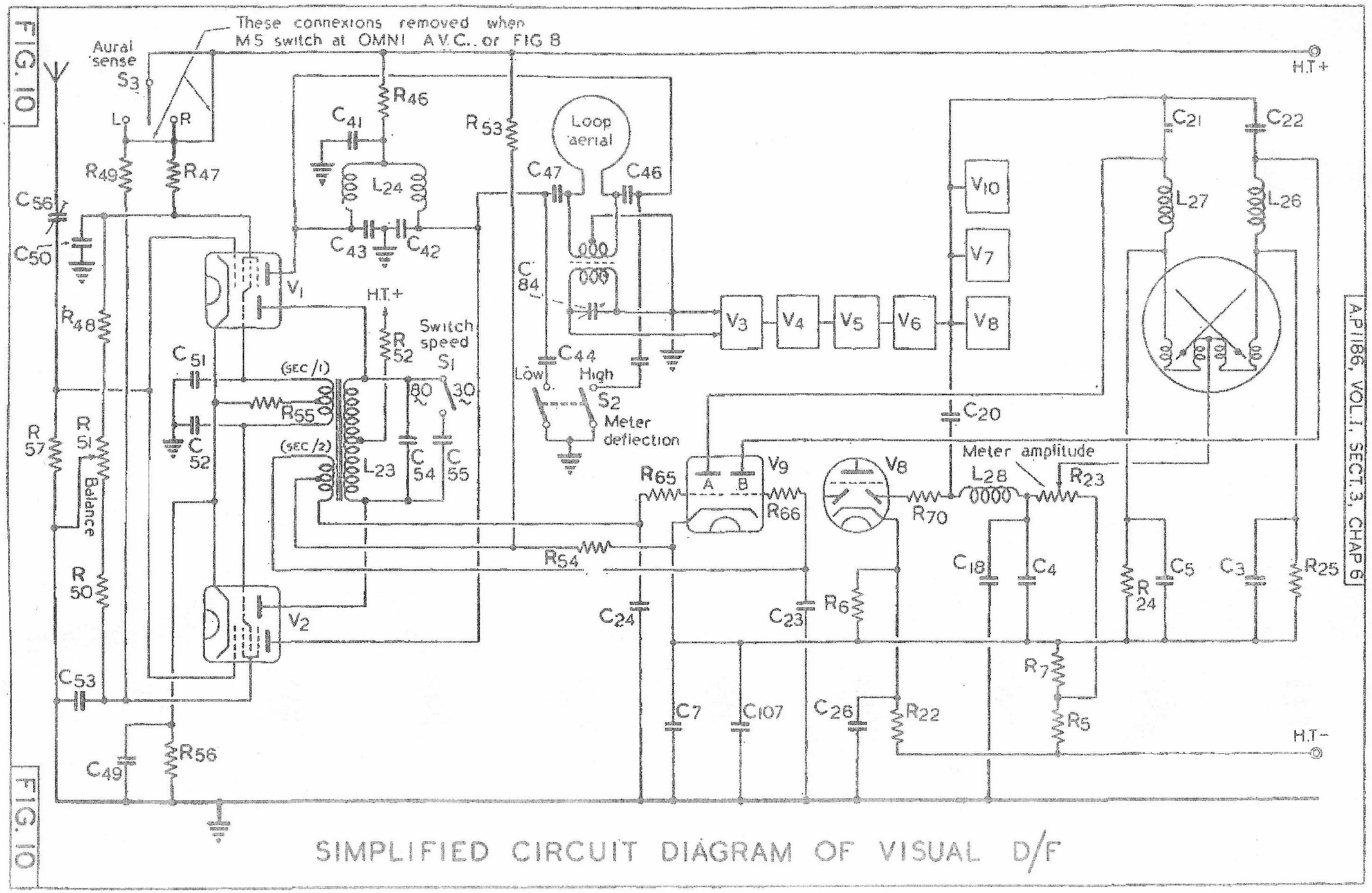

SIMPLIFIED CIRCUIT DIAGRAM OF VISUAL D/F

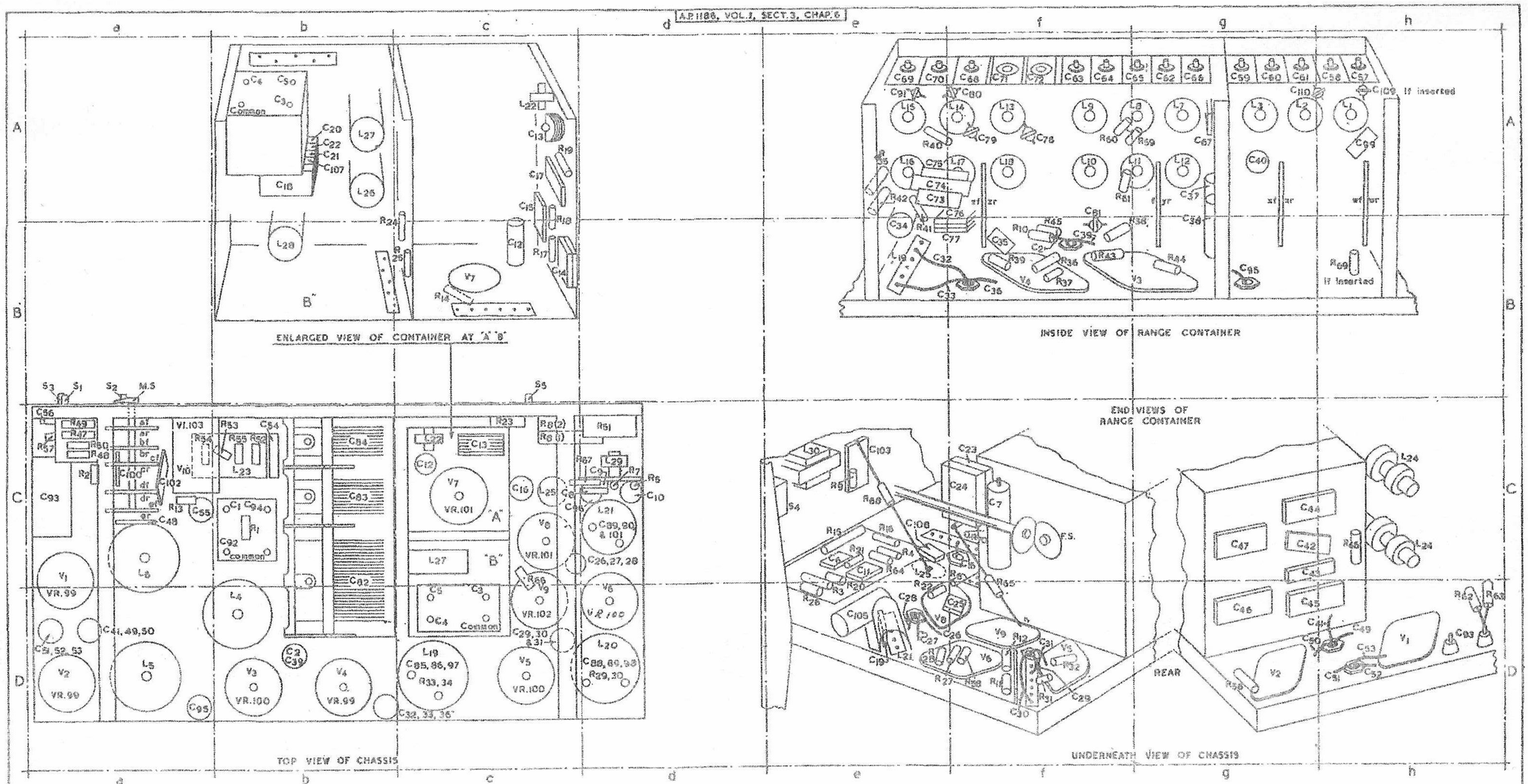

COMPONENTS LOCATION DIAGRAM

FIG.17

REPRINT PP2150 M20881/2459 4/43 4250 C & P Gp. 539(4)

This table should be read in conjunction with fig. 17

COMPONENTS LOCATION (GRID REFERENCES)

Component	G. R.	Component	G. R.	Component	G. R.	Component	G. R.
C_1	Cb	C_{29}	Dc	C_{57}	Ah	C_{85}	Dc
C_2	Db	C_{30}	Dc	C_{58}	Ah	C_{86}	Dc
C_3	Ab, Dc	C_{31}	Dc	C_{59}	Ag	C_{87}	Dd
C_4	Ab, Dc	C_{32}	Db	C_{60}	Ag	C_{88}	Dd
C_5	Ab, Dc	C_{33}	Db	C_{61}	Ag, Ah	C_{89}	Cd
C_6	Ce	C_{34}	Be	C_{62}	Ag	C_{90}	Cd
C_7	Cf	C_{35}	Bf	C_{63}	Af	C_{91}	Ac
C_8	Cd	C_{36}	Db	C_{64}	Af	C_{92}	Cb
C_9	Cd	C_{37}	Ag, Bg	C_{65}	Af, Ag	C_{93}	Ca, Dh
C_{10}	Cd	C_{38}	Ag, Bg	C_{66}	Ag	C_{94}	Ch
C_{11}	Ce	C_{39}	Bf, Db	C_{67}	Ag	C_{95}	Da
C_{12}	Bc	C_{40}	Ag	C_{68}	Af	C_{96}	Cd
C_{13}	Ac, Cc	C_{41}	Da	C_{69}	Ae	C_{97}	Dc
C_{14}	Bc	C_{42}	Cg, Ch	C_{70}	Ac, Af	C_{98}	Dd
C_{15}	Ac	C_{43}	Cg, Ch	C_{71}	Af	C_{99}	Ah
C_{16}	Cc	C_{44}	Cg, Ch	C_{72}	Af	C_{100}	Ca
C_{17}	Ac	C_{45}	Dg, Dh	C_{73}	Ae, Af	C_{101}	Cd
C_{18}	Ab	C_{46}	Dg	C_{74}	Ae, Af	C_{102}	Ca
C_{19}	De	C_{47}	Cg	C_{75}	Ae, Af	C_{103}	Ce
C_{20}	Ab	C_{48}	Ca	C_{76}	Bc, Bf, Af	C_{104}	Plug type 209
C_{21}	Ab	C_{49}	Da	C_{77}	Be, Bf		
C_{22}	Ab	C_{50}	Da	C_{78}	Af	C_{105}	De
C_{23}	Ce, Cf	C_{51}	Da	C_{79}	Af	C_{106}	Plug type 209
C_{24}	Ce, Cf	C_{52}	Da	C_{80}	Af		
C_{25}	De, Df	C_{53}	Da	C_{81}	Bf	C_{107}	Ab
C_{26}	Cd, Cc	C_{54}	Cb	C_{82}	Db, Cb	C_{108}	Ce
C_{27}	Cd, Cc	C_{55}	Ca	C_{83}	Cb	C_{109}	Ah
C_{28}	Cd, Cc	C_{56}	Ca	C_{84}	Cb	C_{110}	Ag

RESISTANCES

R_1	Cb	R_{19}	Ac	R_{37}	Bf	R_{55}	Cb
R_2	Ca	R_{20}	Ce, Dc	R_{38}	Bf	R_{56}	Dg
R_3	Ce, Dc	R_{21}	Ce	R_{39}	Bf	R_{57}	Ca
R_4	Ce	R_{22}	De	R_{40}	Ae	R_{58}	Df
R_5	Cd	R_{23}	Cc	R_{41}	Ae	R_{59}	Af, Ag
R_6	Cf, Df	R_{24}	Ac, Bc	R_{42}	Ae	R_{60}	Af
R_7	Cd	R_{25}	Bc	R_{43}	Bf	R_{61}	Af
R_8	Cc	R_{26}	De	R_{44}	Bg	R_{62}	Dh
R_9	Ce	R_{27}	Df	R_{45}	Bf	R_{63}	Dh
R_{10}	Bf	R_{28}	De	R_{46}	Bf	R_{64}	Ce
R_{11}	Df	R_{29}	Dd	R_{47}	Ca	R_{65}	Cf, Df
R_{12}	Df	R_{30}	Dd	R_{48}	Ca	R_{66}	Cc
R_{13}	Ca	R_{31}	Df	R_{49}	Ca	R_{67}	Cd
R_{14}	Bc	R_{32}	Df	R_{50}	Ca	R_{68}	Ce
R_{15}	Ce	R_{33}	Dc	R_{51}	Cd	R_{69}	Bh (if used)
R_{16}	Ce	R_{34}	Dc	R_{52}	Cb	R_{70}	Cf
R_{17}	Bc	R_{35}	Ae	R_{53}	Cb		
R_{18}	Ac, Bc	R_{36}	Bf	R_{54}	Ca		

COILS AND CHOKES

L_1	Ah	L_9	Af	L_{17}	Ae, Af	L_{25}	Ce, Cd
L_2	Ag, Ah	L_{10}	Af	L_{18}	Af	L_{26}	Ab
L_3	Ag	L_{11}	Af, Ag	L_{19}	Dc, Be	L_{27}	Ab, Ce
L_4	Db	L_{12}	Ag	L_{20}	Dc, Dd	L_{28}	Bb
L_5	Da	L_{13}	Af	L_{21}	Ce, De	L_{29}	Cd, Cc
L_6	Ca	L_{14}	Af, Ae	L_{22}	Ac	L_{30}	Ce
L_7	Ag	L_{15}	Ae	L_{23}	Cb		
L_8	Af, Ag	L_{16}	Ae	L_{24}	Ch		

VALVES

V_1	Ca, Da, Dh	V_4	Db; Bf	V_6	Dd, Cd, Dc, Df	V_8	Cc
V_2	Da, Dg	V_5	Dc; Df			V_9	Cc, Dc, Df
V_3	Dd, Bf, Bg			V_7	Bc, Cc	V_{10}	Ca

SWITCHES

S_1	Ca	S_3	Ba	S_5	Bc	F.S.	Af to Ah
S_2	Ba	S_4	Ce	M.S.	Ca		

127. The power supplies for both L.T. and H.T. of this receiver are derived from a power unit incorporating a three-commutator compound wound rotary transformer driven off the aircraft general electrical system. The power unit, which may be either the type 34 (Stores Ref. 10K/19) of the type 35 (Stores Ref. 10K/20), is described in detail in Sect. 1, Chap. 7 of this publication. The power units, types 34A and 35A which are improved versions of these units are also described therein.

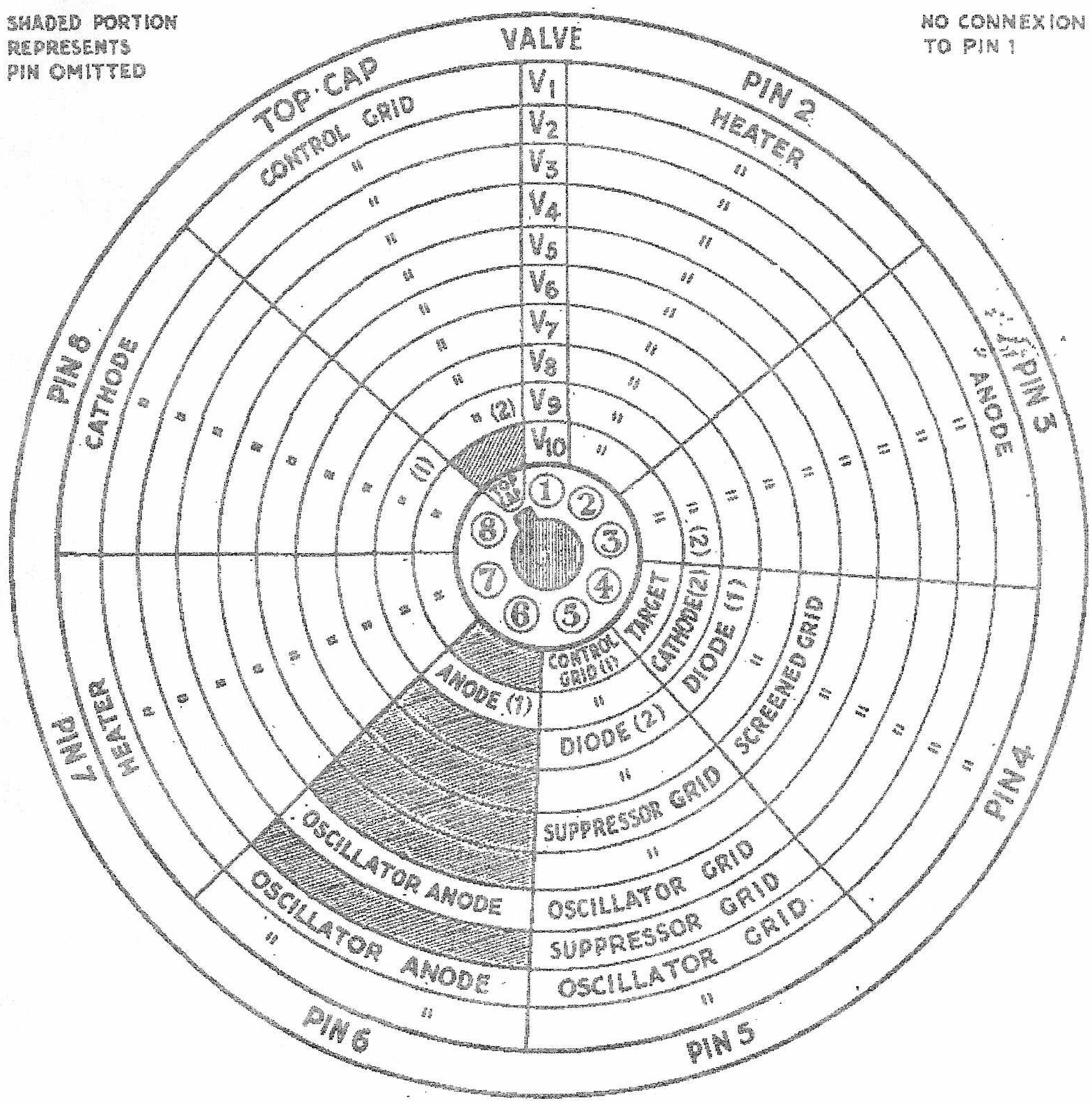

FIG. 20.—VALVE CONNEXIONS

128. The power unit is used in common with the transmitter and supplies the L.T. for that instrument. The accompanying TABLE C gives the power unit types and details.

TABLE C

R.1155 ASSOCIATED POWER UNITS

Type	Stores Ref. No.	Input D.C.		L.T. — Outputs — H.T.				Rated Watts
		Volts	Amps.	Volts	Amps.	Volts	mA.	
34	10K/19	10·3	24	7	13	217	110	115
35	10K/20	18·5	12	7	13	217	110	115
34A	10K/13065	10·3	24	7	13	217	110	115
35A	10K/13066	18·5	12	7	13	217	110	115

The receiver D.C. feed varies according to the master switch position ranging from 48 mA at OMNI with volume control at a minimum to 69 mA or more at BALANCE or VISUAL with maximum setting of volume control.

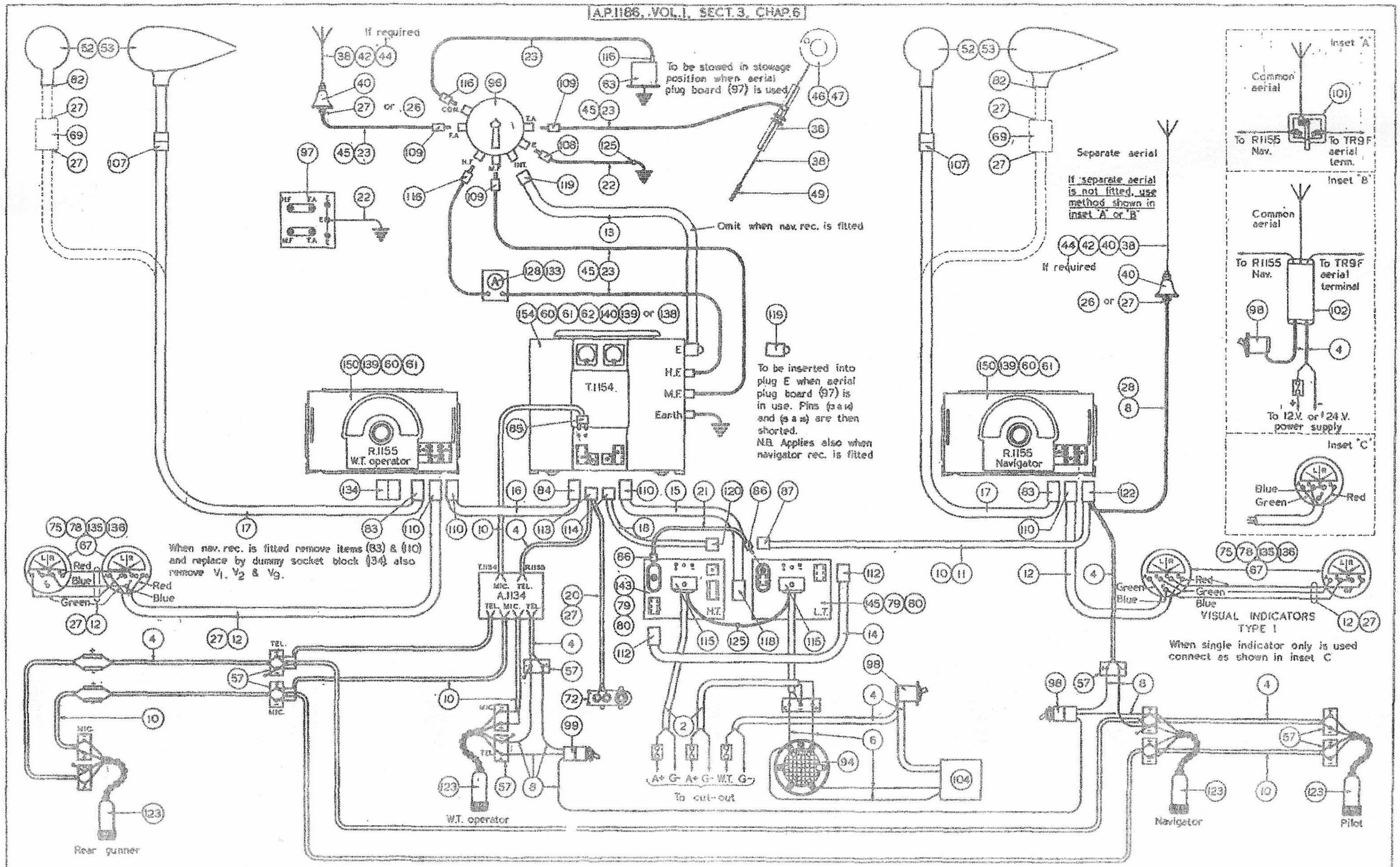

FIG. 21

TYPICAL INSTALLATION DIAGRAM

FIG. 21

REPRINT PP2150 PD2881/2455 4/43 4250 C & P Gp. 559(4)