PIONEER

Service Manual

CIRCUIT DESCRIPTIONS
REPAIR & ADJUSTMENTS

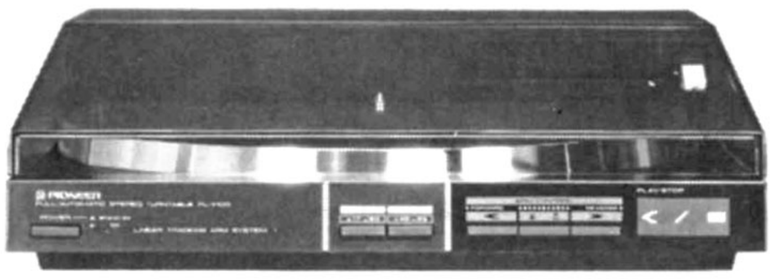

ORDER NO.
ARP-666-0

STEREO TURNTABLE

PL-X100

MODEL PL-X100 COMES IN FOUR VERSIONS DISTINGUISHED AS FOLLOWS:

Type	Voltage	Remarks
KUT	AC120V only	U.S.A. model without cartridge
WEM	AC220-240V	European continent model
WB	AC220-240V	United Kingdom model
R	AC110-120V, 220-240V (switchable)	General export model

- **This service manual is applicable to the R, WEM, WB and KUT types.**
- **As to the WEM, WB and KUT types, please refer to page 42.**
- **Ce manuel d'instruction se refère au mode de réglage, en français.**
- **Este manual de servicio trata del método de ajuste escrito en español.**

CONTENTS

1. SAFETY INFORMATIONS 2
2. SPECIFICATIONS 3
3. FRONT PANEL FACILITIES 4
4. BLOCK DIAGRAM 5
5. CIRCUIT DESCRIPTIONS 6
6. DISASSEMBLY 13
7. PARTS LOCATION 16
8. EXPLODED VIEW AND PARTS LIST 18
9. P.C. BOARDS CONNECTION DIAGRAM 21
10. SCHEMATIC DIAGRAM 25
11. ELECTRICAL PARTS LIST 27
12. TROUBLESHOOTING 29
13. ADJUSTMENTS 35
    RÉGRALGE 37
    AJUSTE 39
14. PACKING 41
15. SUPPLEMENT FOR WEM, WB AND KUT TYPES 42

PIONEER ELECTRONIC CORPORATION 4-1, Meguro 1-Chome, Meguro-ku, Tokyo 153, Japan
PIONEER ELECTRONICS [USA] INC. P.O. Box 1760, Long Beach, California 90801 U.S.A.
TEL: [800] 421-1404, [800] 237-0424
PIONEER ELECTRONIC [EUROPE] N.V. Keetberglaan 1, 2740 Beveren, Belgium TEL: 03/775·28·08
PIONEER ELECTRONICS AUSTRALIA PTY. LTD. 178-184 Boundary Road, Braeside, Victoria 3195, Australia
TEL: [03] 580-9911

DEC. 1984 Printed in Japan

www.hifiengine.com

1. SAFETY INFORMATIONS

1. SAFETY PRECAUTIONS

The following check should be performed for the continued protection of the customer and service technical.

LEAKAGE CURRENT CHECK

Measure leakage current to a known earth ground (water pipe, conduit, etc.) by connecting a leakage current tester such as Simpson Model 229-2 or equivalent between the earth ground and all exposed metal parts of the appliance (input/output terminals, screwheads, metal overlays, control shaft, etc.). Plug the AC line cord of the appliance directly into a 120V AC 60Hz outlet and turn the AC power switch on. Any current measured must not exceed 0.5mA.

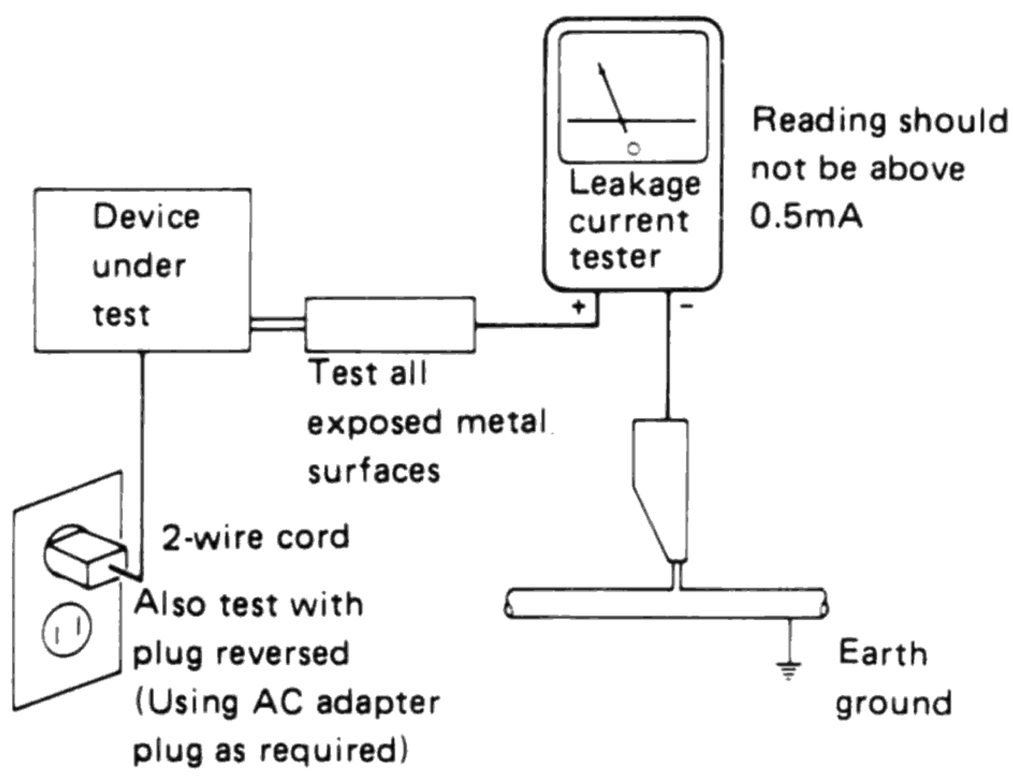

ANY MEASUREMENTS NOT WITHIN THE LIMITS OUTLINED ABOVE ARE INDICATIVE OF A POTENTIAL SHOCK HAZARD AND MUST BE CORRECTED BEFORE RETURNING THE APPLIANCE TO THE CUSTOMER.

2. PRODUCT SAFETY NOTICE

Many electrical and mechanical parts in the appliance have special safety related characteristics. These are often not evident from visual inspection nor the protection afforded by them necessarily can be obtained by using replacement components rated for voltage, wattage, etc. Replacement parts which have these special safety characteristics are identified in this Service Manual.

Electrical components having such features are identified by marking with a ⚠ on the schematics and on the parts list in this Service Manual.

The use of a substitute replacement component which dose not have the same safety characteristics as the PIONEER recommended replacement one, shown in the parts list in this Service Manual, may create shock, fire, or other hazards.

Product Safety is continuously under review and new instructions are issued from time to time. For the latest information, always consult the current PIONEER Service Manual. A subscription to, or additional copies of, PIONEER Service Manual may be obtained at a nominal charge from PIONEER.

www.hifiengine.com

2. SPECIFICATIONS

Motor and Turntable

Drive System ..... Belt-drive
Motor ..... DC servo motor
Turntable Platter ..... 303 mm diam. aluminum alloy die-cast
Speeds ..... 33-1/3 and 45 rpm
Wow and Flutter ..... Less than 0.05% (WRMS)
± 0.065% WTD Peak (DIN)
Signal-to-Noise-Ratio ..... More than 70 dB (DIN-B)
(with Pioneer cartridge model PC-290T)

Tonearm

Type ..... Integrated straight tonearm

PC-290T Specifications

Type ..... IM type
Stylus ..... 0.5 mil diamond (PN-290T)
Output Voltage ..... 2.5 mV
(1 kHz, 5 cm/s LAT. Peak)
Tracking Force ..... 1.0 g to 1.5 g (proper 1.25 g)
Frequency Response ..... 10 to 30,000 Hz
Recommended Load ..... 50 kΩ
Weight ..... 6 g

Subfunctions

Auto lead-in, auto return, auto cut, arm elevation, manual play

Miscellaneous

Power Requirements
WEM, WB, WP models ..... AC 220 V–240 V ~
50, 60 Hz
KUT, KC models ..... AC 120 V, 60 Hz
R, R/G models ..... AC 110 V–120 V/220 V–240V ~
(switchable) 50, 60 Hz

Power Consumption
WEM, WB, WP models ..... 9 W
KUT, KC models ..... 9 W
R, R/G models ..... 7 W
Dimensions ..... 320 (W) x 98 (H) x 340 (D) mm
12-5/8 (W) x 3-7/8 (H) x 13-3/8 (D) in.
Weight ..... 3.6 kg/8 lb

Accessories

EP Adapter 1
Operating Instructions 1

NOTE:
Specifications and design subject to possible modification without notice, due to improvements.

www.hifiengine.com

3. FRONT PANEL FACILITIES

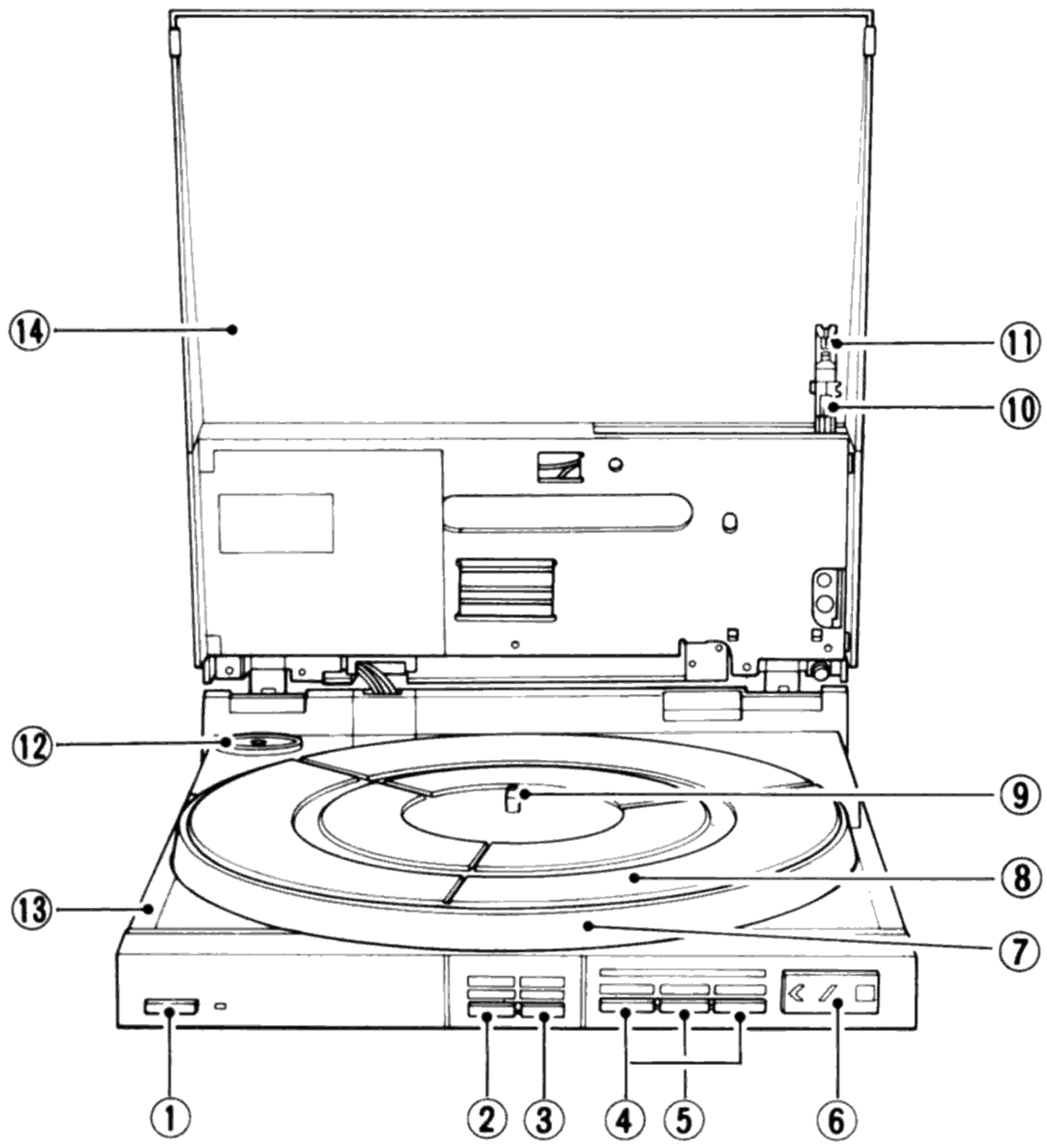

① POWER switch/Indicator

Press this switch to turn the power on and off.
(depressed position) [ON] : Power is switched ON.
(released position) [STAND-BY] : Power is switched OFF.

② SIZE switch

Set this switch in accordance with the size of the record which is to be played.
[30] (depressed position): For 30 cm LPs
[17] (released position): For 17 cm EPs

③ SPEED switch

Set this switch in accordance with the speed of the record which is to be played.
[45] (released position): For 45 rpm records.
[33] (depressed position): For 33-1/3 rpm records.

④ LOCATE switches (FORWARD/REVERSE)

Use these switches to start manual playback, or during playback to change the track being played. When the switches are pressed, the tonearm will move to the right or left.
[FORWARD]: Tonearm moves to left.
[REVERSE]: Tonearm moves to right.

⑤ ARM ELEVATION switch

- Use the switch for manual play.
- Use the switch to suspend record play temporarily.
- Use the switch when changing the tracks during actual play.
  The tonearm moves up or down when this switch is depressed.
  [▼̲] : The tonearm rises (the stylus moves away from the record).
  [▼] : The tonearm descends (the stylus is lowered onto the record).

⑥ PLAY/STOP switch

Depress this switch when starting auto play or when stopping play.

⑦ Platter

⑧ Platter mat

⑨ Platter shaft

⑩ Tonearm

⑪ Cartridge (PC-290T)

NOTE:
A cartridge is not provided with the U.S.A. model and so your own cartridge should be mounted, following the instructions laid down in CARTRIDGE MOUNTING.

⑫ EP adapter

This is used when playing records with a "large center hole".

⑬ Cabinet

⑭ Dust cover

www.hifiengine.com

4. BLOCK DIAGRAM

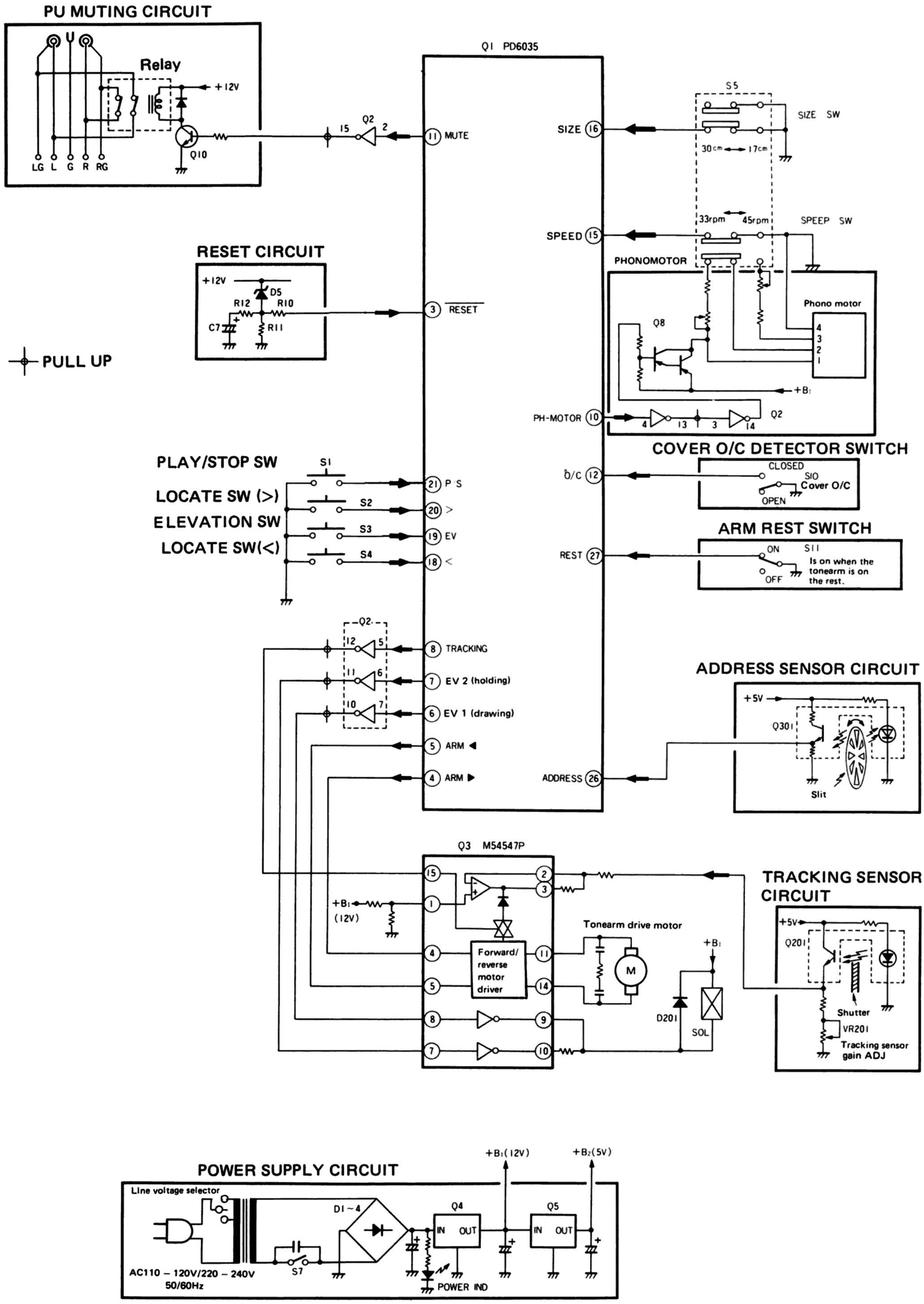

5. CIRCUIT DESCRIPTIONS

5.1 CIRCUIT DESCRIPTIONS

5.1.1 Addres Sensor Circuit

The address sensor is located on the mechanism base unit. It detects the position of the tonearm and sends address pulses to the control IC as the tonearm moves. The address sensor is made up of an internal schmitt trigger circuit photo interrupter and a slit wheel which is synchronized with the carriage. The slit wheel spins when the carriage moves and intermittently cuts off light to the photo interrupter (Q301) in pulses which correspond to the carriage movement. These pulses are counted by the control IC, which detects the distance the carriage moves, the tonearm lowering position and the end of the record. It also registers band addresses.

The address pulses from the photo interrupter work as follows: When the light is cut off, the output is "L," and when the light is not cut off the output is "H." One address signal pulse is approximately equivalent to 0.114mm of tonearm movement.

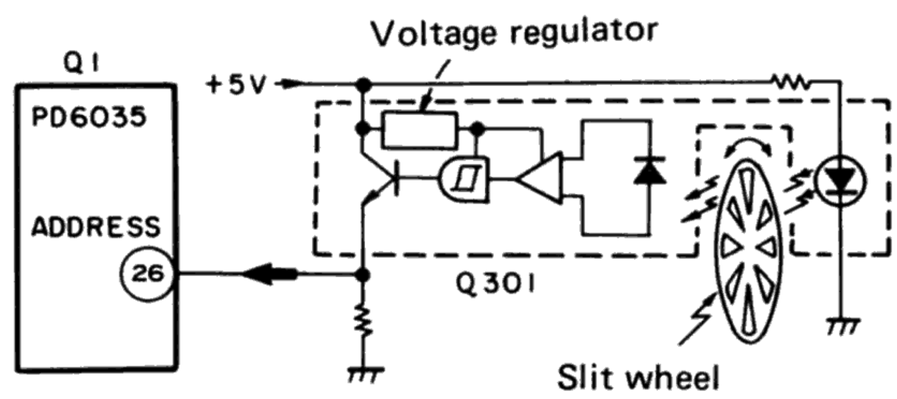

Fig. 5-1 Address sensonsor circuit

5.1.2 Tracking Sensor Circuit

This circuit detects tracking errors by means of a shutter which is synchronized with the tonearm and a photo interrupter.

The tracking sensor is made up of a shutter synchronized with the tonearm and a photo interrupter which is mounted onto the carriage base board. When the tonearm lowers and begins tracking the record surface the tonearm tracking errors increase as the number of rpms increases. When tracking errors increase, the shutter, which is synchronized with the tonearm, also moves and the light cutout rate of the photo interrupter changes. Subsequently, the output of the photo interrupter changes and is sent to the tonearm drive unit in the form of tracking error signals.

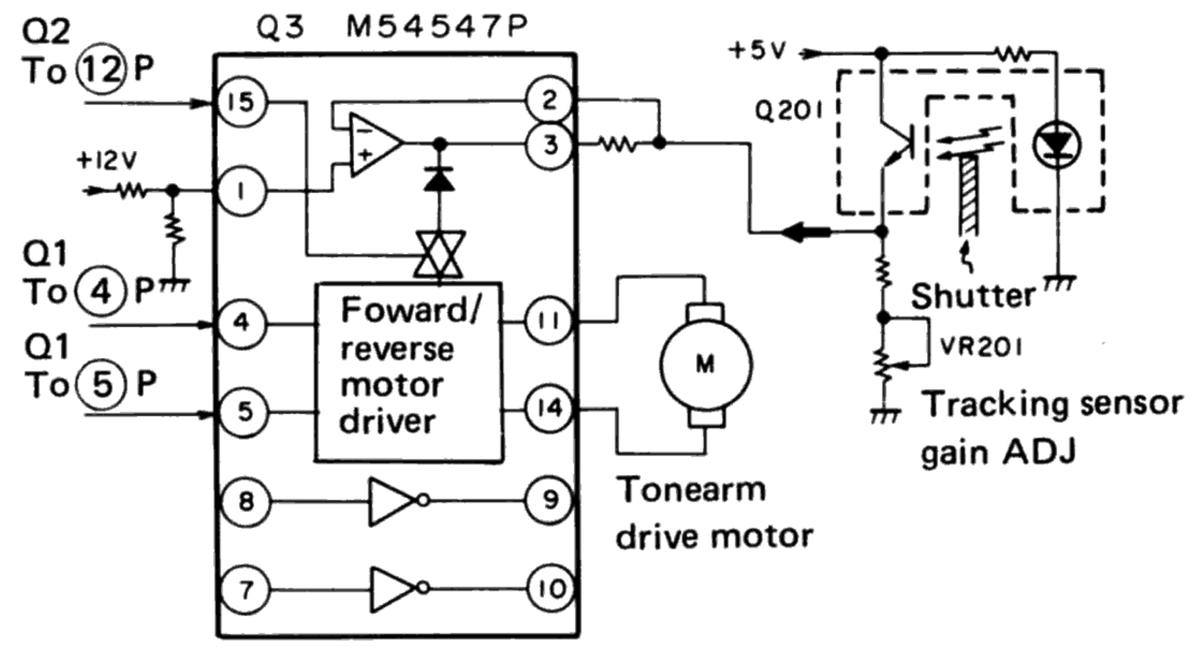

Fig. 5.2 Tracking sensor circuit

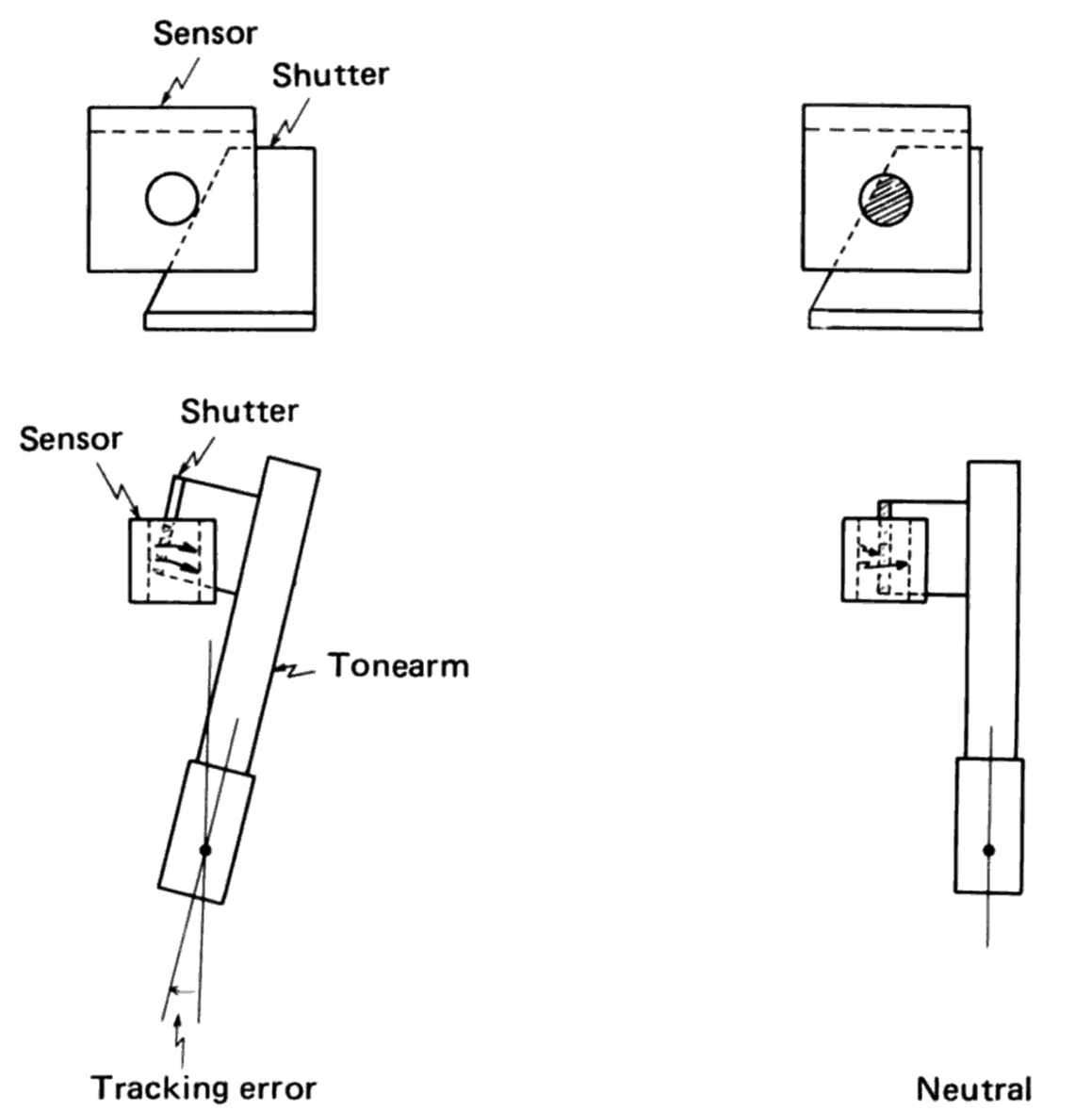

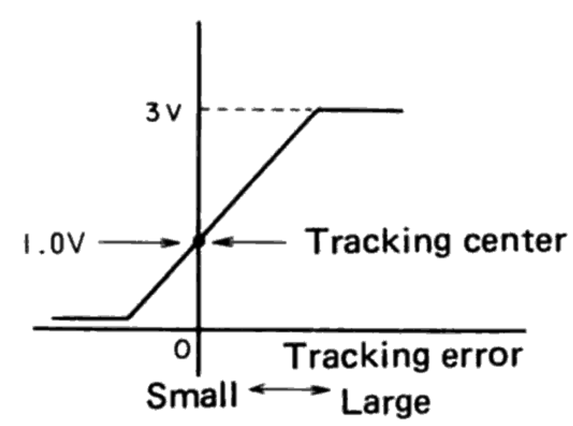

Fig. 5.3 Detection of tracking errors.

www.hifiengine.com

5.1.3 Elevation and Tonearm Circuits

The tonearm drive motor and EV solenoid are controlled by commands from the control IC (Q1), which also controls the horizontal and vertical movements of the tonearm. In addition to this, the IC controls tonearm tracking with the tracking sensor and tracking error signals.

- **EV solenoid drive**

The EV solenoid drive uses a large current at first to draw the plunger inside, and thereafter uses a lower current for holding the plunger in.

The signal to draw the plunger inside comes from the control IC, passes through the Q2 transistor array, and enters Q3 pin 8. This signal turns on the Q3 Darlington transistor, and approximately 170mA of current runs into the collector, turning on the EV solenoid which draws the plunger inside. Because of this, the tonearm will drop slightly. This "draw" signal from the control IC lasts about 1 second. Next, the hold signal, which was output at the same time as the draw signal, passes through the Q2 transistor array, enters Q3 pin 7 and turns on the Darlington transistor. When the draw signal ends, a current of approximately 70mA drawn from pin 10 holds the plunger inside, which keepts the tonearm elevation down until the hold signal ends.

- **Tonearm drive**

The tonearm drive is controlled by input signal to Q3 pin 4, pin 5, and pin 15. Their truth values are shown in Fig. 5-6.

- **Lead-in (locate-in)**

Q3 receives locate-in signals from the control IC (Q1), and with an output of approximately 0V from Q3 pin 14 (O1) and approximately 11V from pin 11(O2), the tonearm motor begins turning in the lead-in direction.

- **Lead-out (locate-out)**

Q3 receives locate-out signals from the control IC (Q1), and with an output of approximately 11V from pin 14 and approximately 0V from pin 11, the tonearm motor begins turning in the lead-out direction.

- **Stop**

Q3 receives stop signals from the control IC (Q1) and with an output of approximately 0V from both pin 14 and pin 11, stops the tonearm motor.

- **Tracking**

Q3 receives tracking signals from the control IC (Q1), and between pin 14 and pin 11, outputs an amplified tracking error signal (amplified by an internal OP amplifier) and begins turning the tonearm drive motor in such a way as to correct the error.

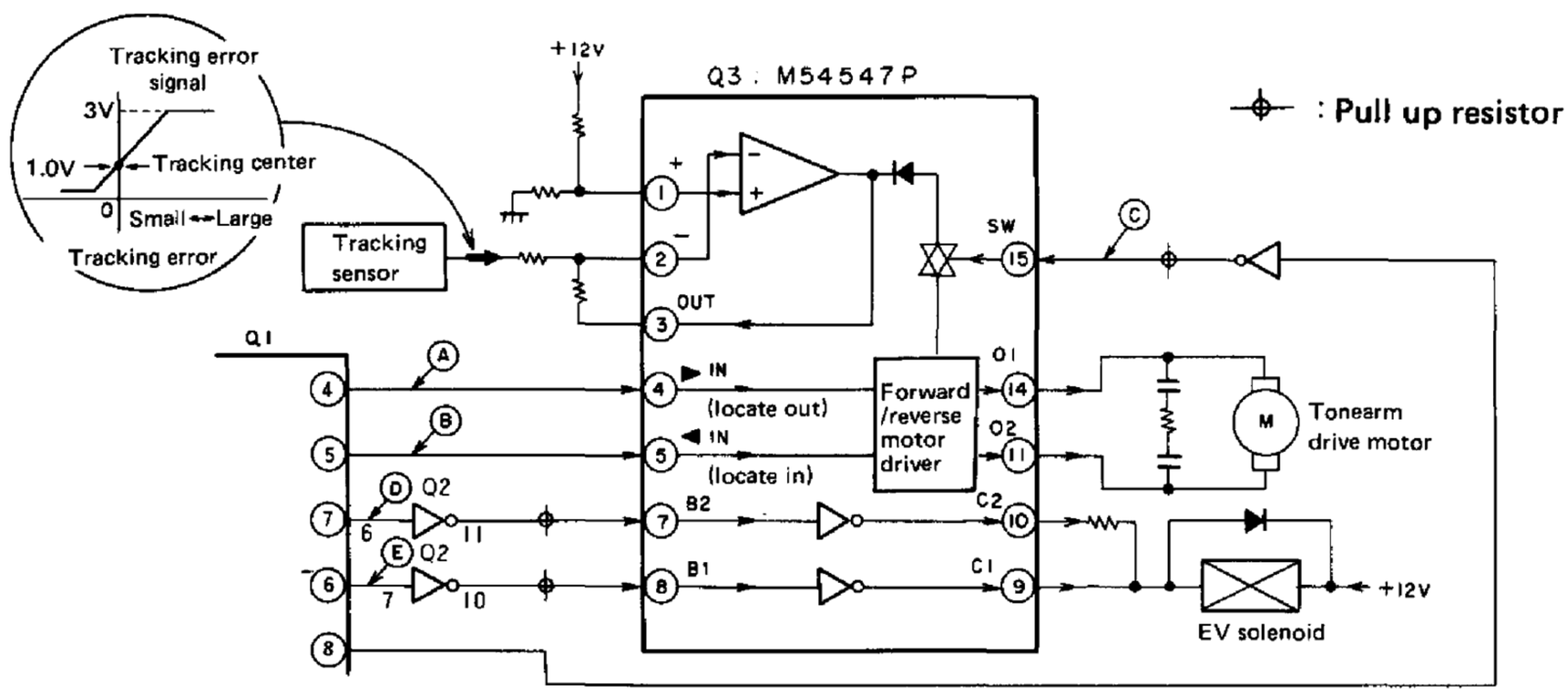

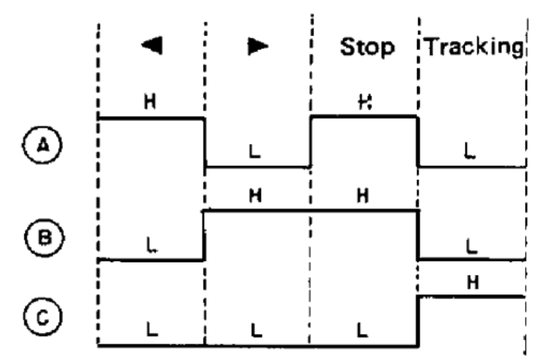

Input			Output		Tonearm operation
▶ IN ④	◀ IN ⑤	SW ⑮	O1 ⑭	O2 ⑪	
H	L	L	L	H	Lead-in ◀◀
L	H	L	H	L	Lead-out ▶▶
H	H	L	L	L	Stop
L	L	H	L	H	Tonearm tracking

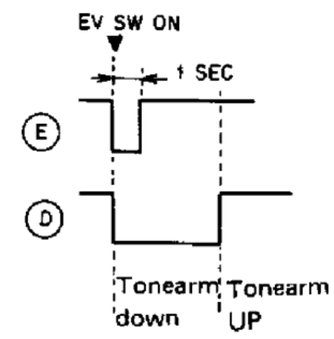

Fig. 5.6 Elevation and Tonearm Drive Circuit and I/O Truth Value Chart.

www.hifiengine.com

5.1.4 IC(PD6035) Pin Descriptions

Pin arrangement

TOP VIEW

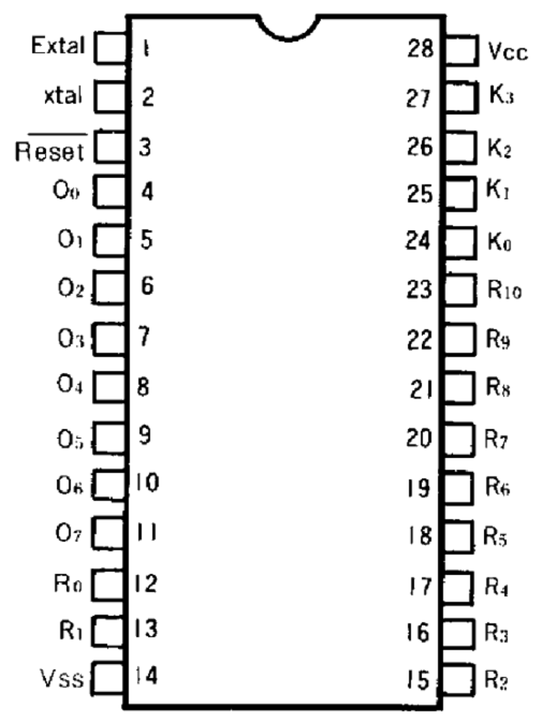

Pin No.	Symbol	INPUT/ OUTPUT	Pin name	Description		Remarks
1	EXtal	—	—	Built-in clock oscillator:terminal for outside circuits		Ceramic resorator of 3MHz
2	Xtal					
3	$\overline{\text{Reset}}$	INPUT		CPU initial reset input	Reset	Normally "H"
4	O0	OUTPUT	ARM >	Tonearm motor drive output (movement toward outside edge of record)	> OFF	
5	O1		ARM <	Tonearm motor drive output (movement toward center edge of record)	< OFF	
6	O2		EV1	Tonearm elevation drive output (drawing plunger in)	ON OFF	Drawing time:1 second
7	O3		EV2	Tonearm elevation drive output (holding plunger in)	ON OFF	
8	O4		TRACKING	Tonearm tracking output, during tracking	ON OFF	
9	O5		(33/45	Phono motor 33/45 switch output)	45 33	Not in use
10	O6		PH-MOTOR	Phono motor start/stop output	Start Stop	
11	O7		MUTE	Muting on/off output	OFF ON	
12	R0	INPUT	O/C	Cover open/closed detection input	Open Close	
13	R1	INPUT	Tonearm landing	Landing detection switch input	Timer Sensor	
14	Vss	—	—	GND		
15	R2	INPUT	SPEED	33/45 speed switch input	33 45	
16	R3		SIZE	Record size switch input	30 17	
17	R4		(REP	Repeat switch input)	ON OFF	Not in use
18	R5		<	Locate switch input (movement toward center of record)	ON OFF	
19	R6		EV	Tonearm elevation switch input	ON OFF	
20	R7		>	Locate switch input (movement toward outside edge of record)	ON OFF	
21	R8		P/S	Tonearm play/stop switch input	ON OFF	
22	R9	OUTPUT	(UP LED	Tonearm up LED output)	UP DOWN	Not in use
23	R10	OUTPUT	(REP LED	Repeat LED output)	ON OFF	Not in use
24	K0	INPUT	(AF IN	Auto function stop input)	STOP	Not in use
25	K1		LAND	Tonearm landing sensor input	UP LANDING	
26	K2		ADDRESS	Address sensor input		
27	K3		REST	Rest switch input	Rest Out of rest	
29	Vcc	—	—	+5V		

www.hifiengine.com

Timing chart

17cm EP fully automatic operation 1 cycle

☆Speed switch set to 45 rpm
☆Size switch set to 17cm

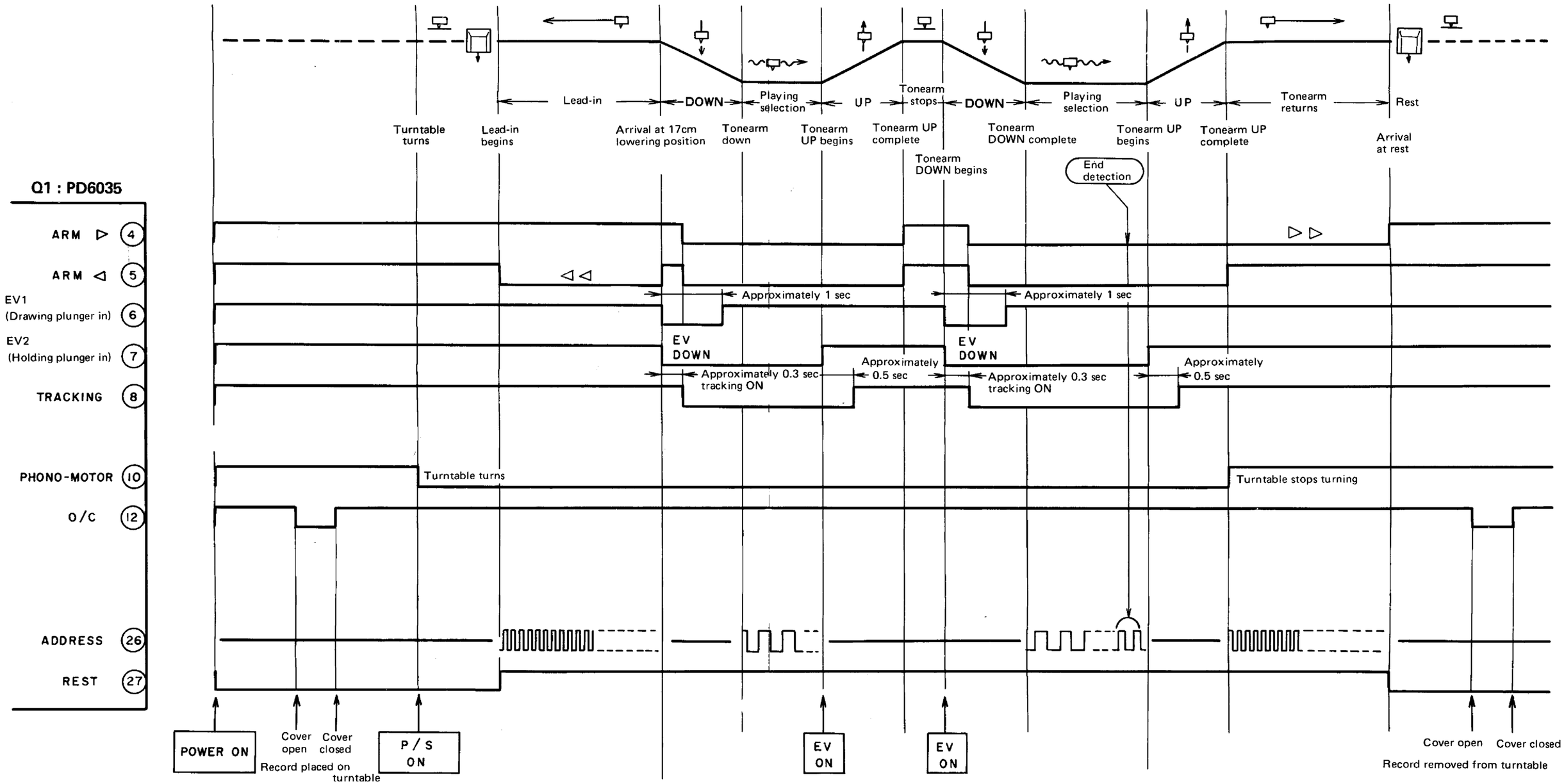

17cm EP Fully automatic playing

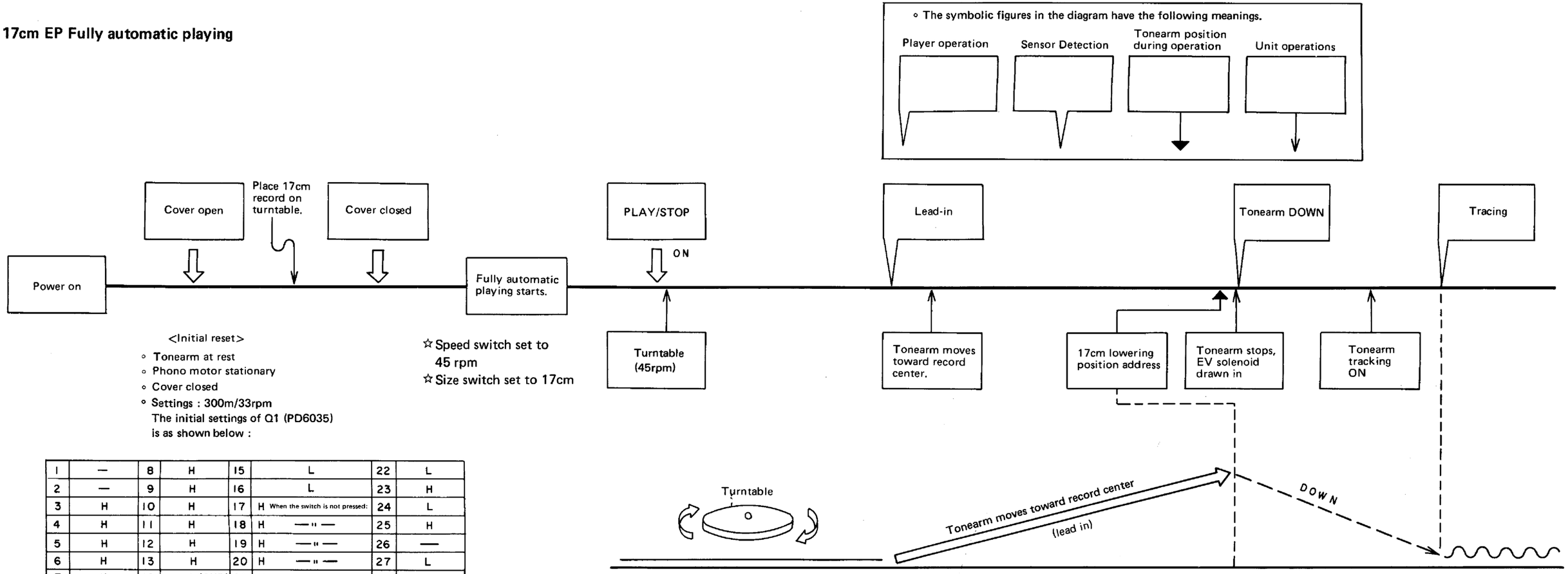

1	—	8	H	15	L	22	L
2	—	9	H	16	L	23	H
3	H	10	H	17	H When the switch is not pressed:	24	L
4	H	11	H	18	H —"—	25	H
5	H	12	H	19	H —"—	26	—
6	H	13	H	20	H —"—	27	L
7	H	14	L (GND)	21	H —"—	28	5V

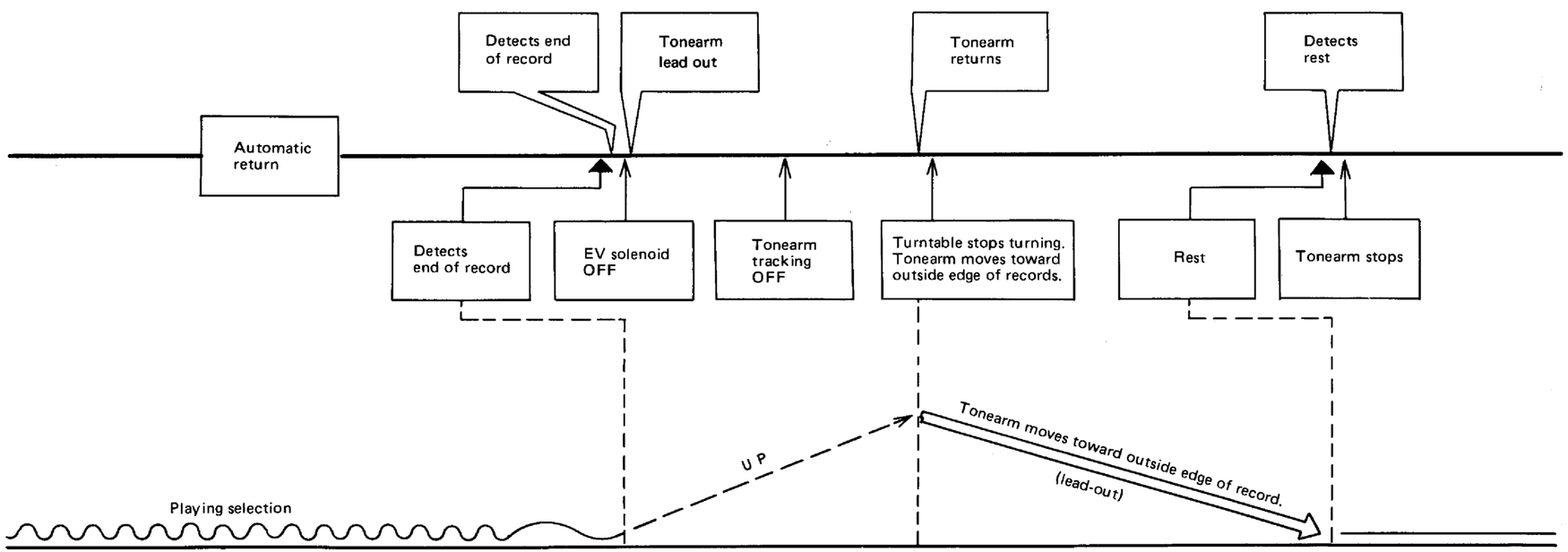

www.hifiengine.com

6. DISASSEMBLY

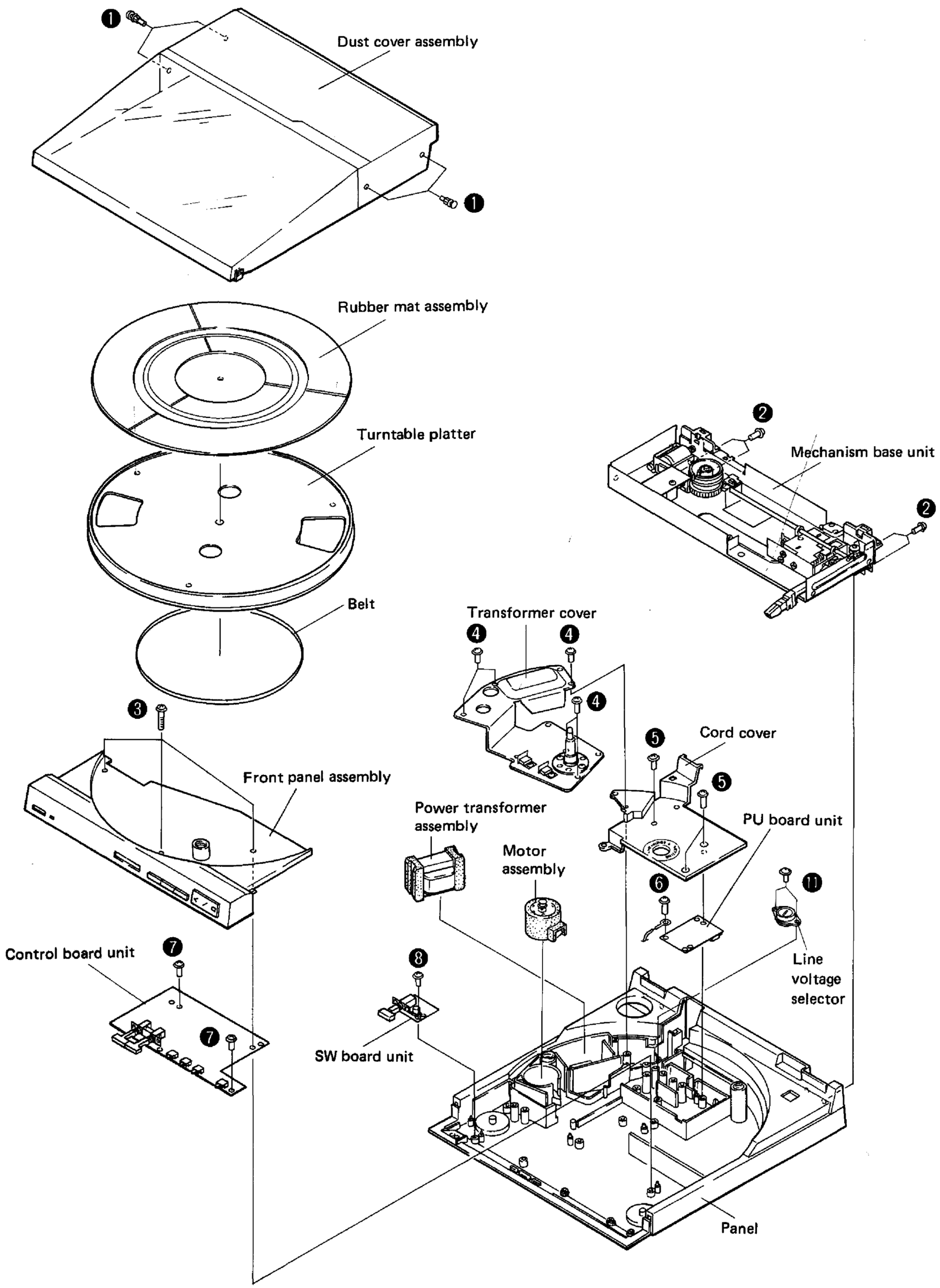

6.1 UNIT DISASSEMBLY

1. Open the dust cover and remove the rubber mat, belt and turntable.
2. To remove the dust cover, open it up and remove the plastic rivets labeled ❶ . (The plastic rivets can be removed easily by pushing the pins from the inside of the dust cover.)
3. Removing screw ❷ release the mechanism base unit.
4. Removing screw ❸ releases the front panel assembly.
5. Removing screw ❹ releases the transformer cover.
6. Removing screw ❺ releases the cord cover.
7. Removing screw ❻ releases the PU board unit.
8. Removing screw ❼ releases the control board unit.
9. Removing screw ❽ releases the SW board unit.
10. Removing screw ❶❶ releases the line voltage selector.

6.2 CARRIAGE REMOVAL

1. Remove the fixer from the carriage and the wire from the pulley. (See Fig. 6.2)
2. Remove screw ❾ and pull the guide bar away from the carriage in the direction indicated by the arrow. The carriage and tonearm assembly can now be removed.
3. Removing the spring will release the carriage board assembly, and removing screw ❶❶ will release the mechanism base board assembly.

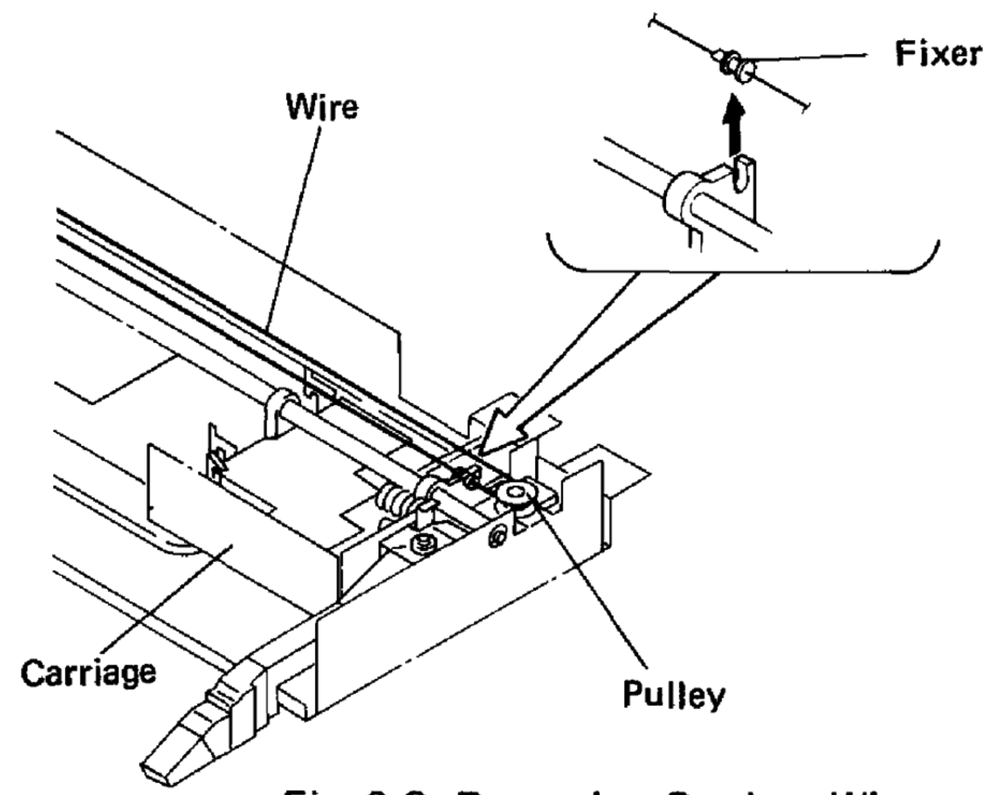

Fig. 6.2 Removing Carriage Wire

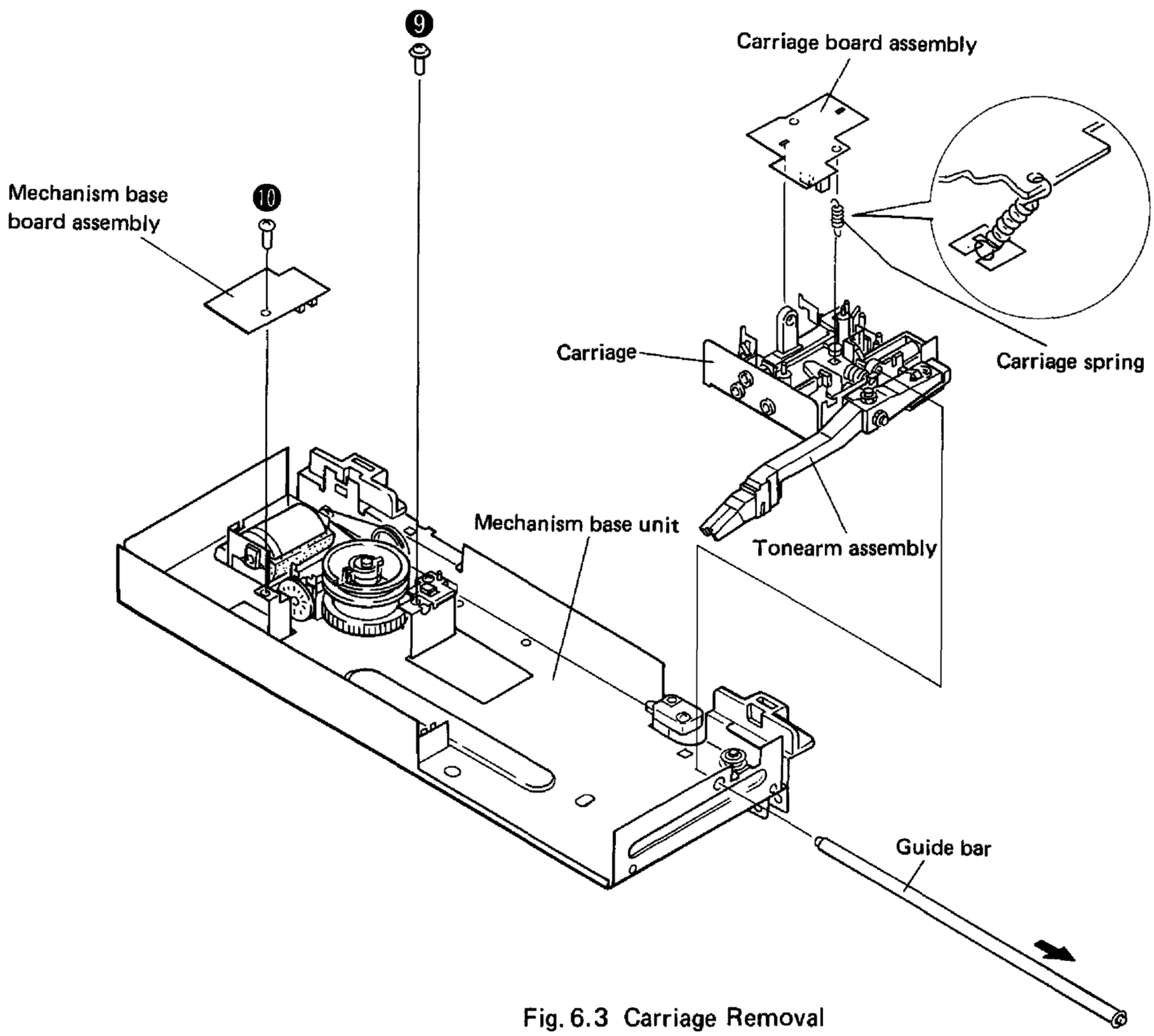

Fig. 6.3 Carriage Removal

www.hifiengine.com

6.3 REPLACING THE CARRIAGE WIRE

- After assembling the carriage and tonearm assemblies in the opposite order of the previous section, replace the carriage wire according to the following steps.

1. Adjust the length of the wire unit as shown in Fig. 6.4 ⓐ .
2. Attach the wire unit grommet to the spring of the worm wheel as shown in Fig. 6.4 ⓑ . Then wind the wire onto the worm wheel taking care not to let it get caught in the worm wheel groove. Also be careful not to let the wire overlap.
3. Holding both the wire and the worm wheel, connect the wire to the wire guard and attach the worm wheel to the mechanism base.
4. As shown in Fig. 6.4 ⓒ , put the wire around the pulley, and push the fixer into the carriage until it locks with a click.

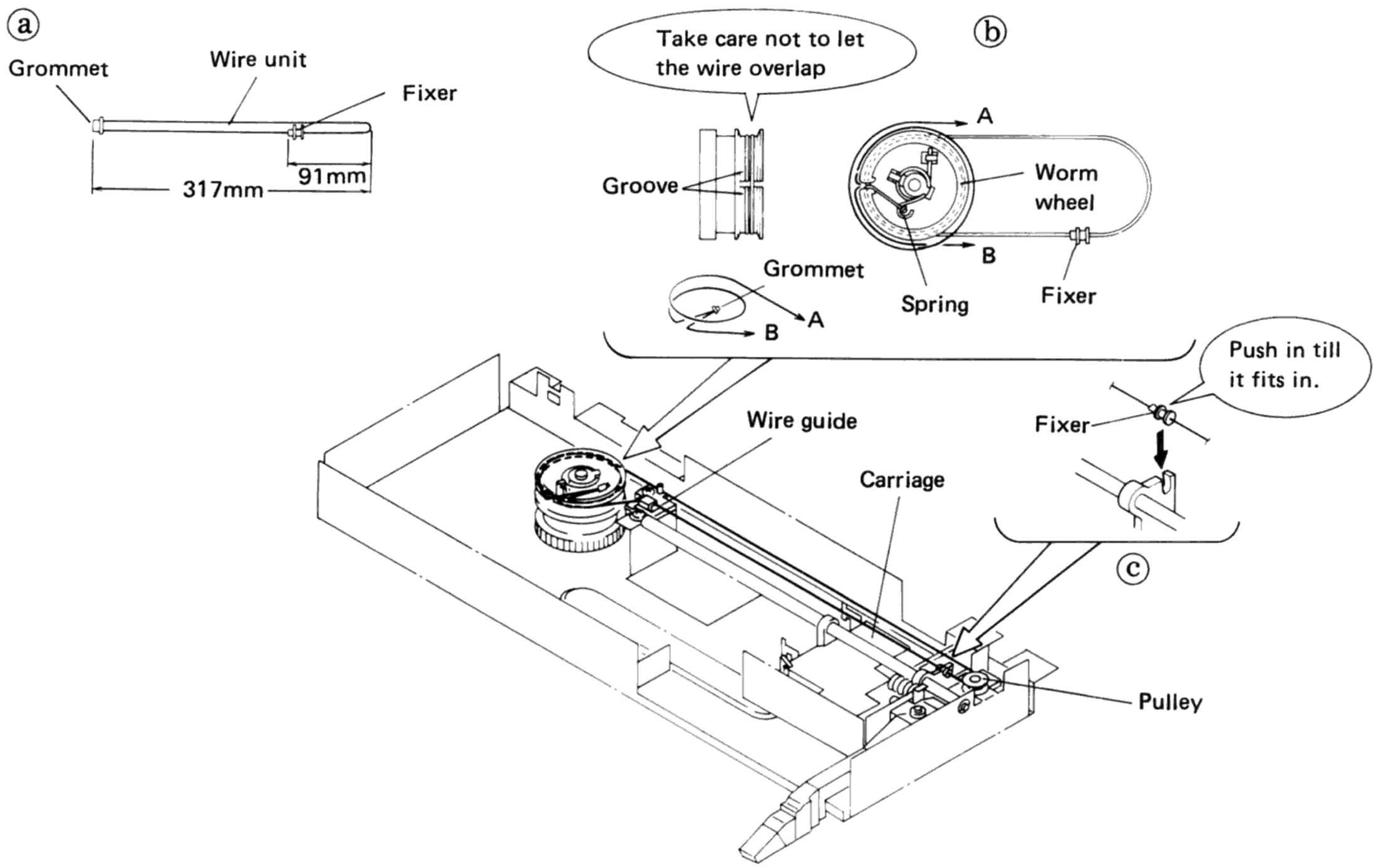

Fig. 6.4 Wire Replacement

6.4 LEAD LINE DISPOSAL

1. Slide carriage to the left as far as it will go.
2. Insert enough lead line to reach from the clamp to the motor holder. (Indicated by arrows) Insert the tickest line last.
3. Move the carriage to the left and right, and check to make sure that the lead lines don't hit the carriage.

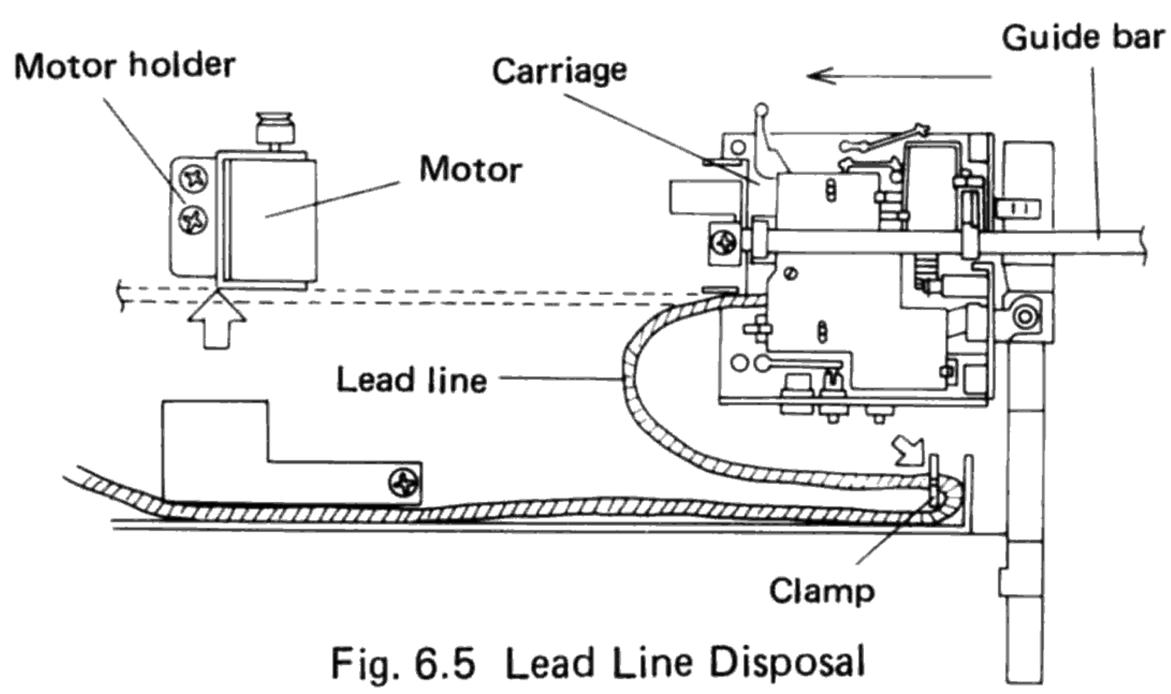

Fig. 6.5 Lead Line Disposal

www.hifiengine.com

7. PARTS LOCATION

NOTES:

- *The ⚠ mark found on some component parts indicates the importance of the safety factor of the part. Therefore, when replacing, be sure to use parts of identical designation.*
- *For your Parts Stock Control, the fast moving items are indicated with the marks ★★ and ★ .*
  ★★ GENERALLY MOVES FASTER THAN ★
  This classification shall be adjusted by each distributor because it depends on model number, temperature, humidity, etc.

Front Panel

Rear Panel

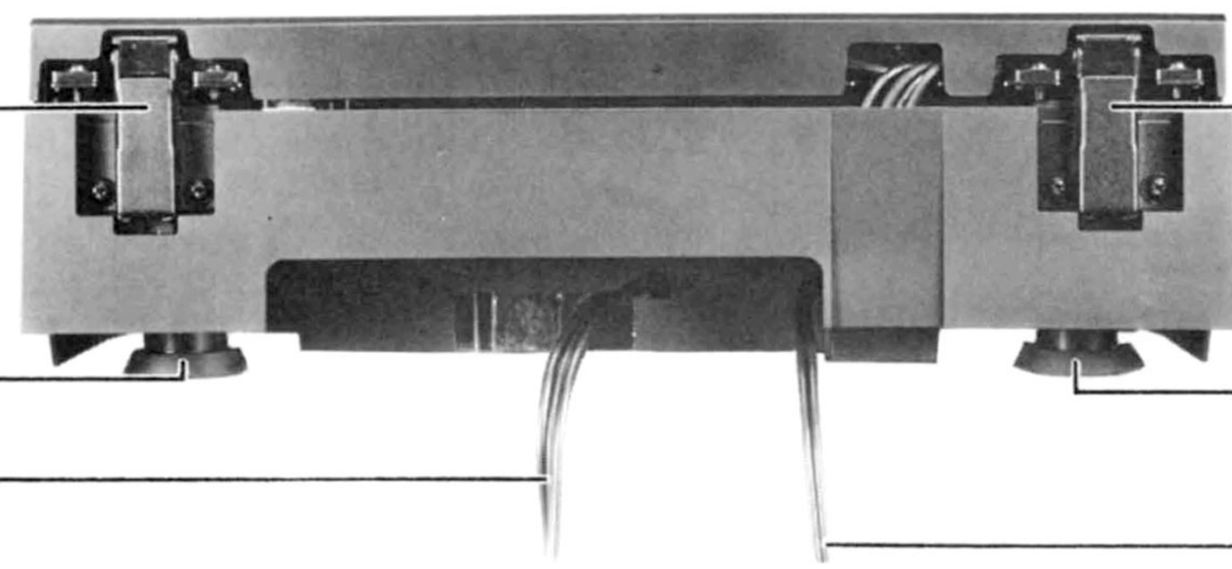

www.hifiengine.com

Top View 1

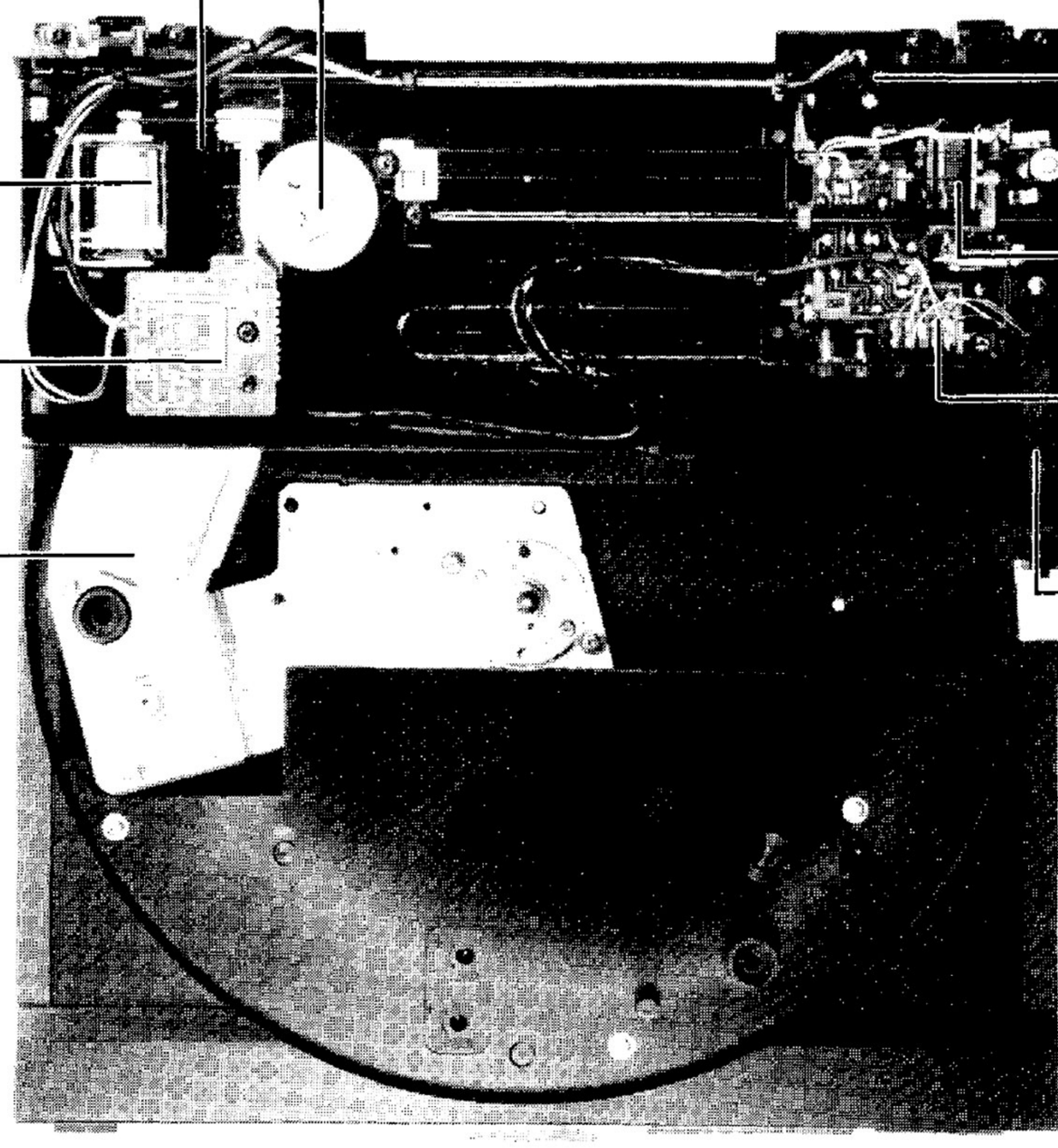

Top View 2

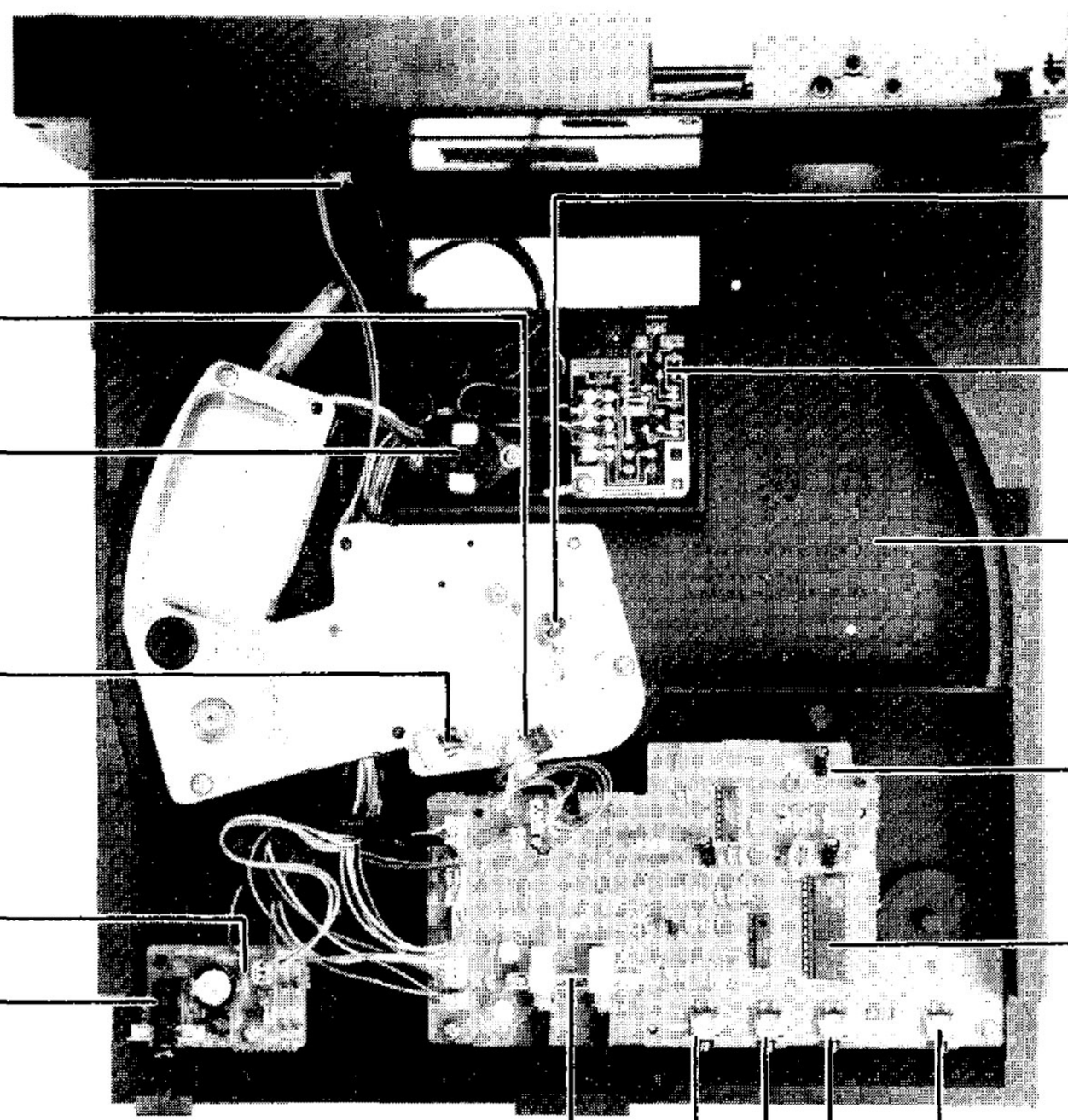

8. EXPLODED VIEW AND PARTS LIST

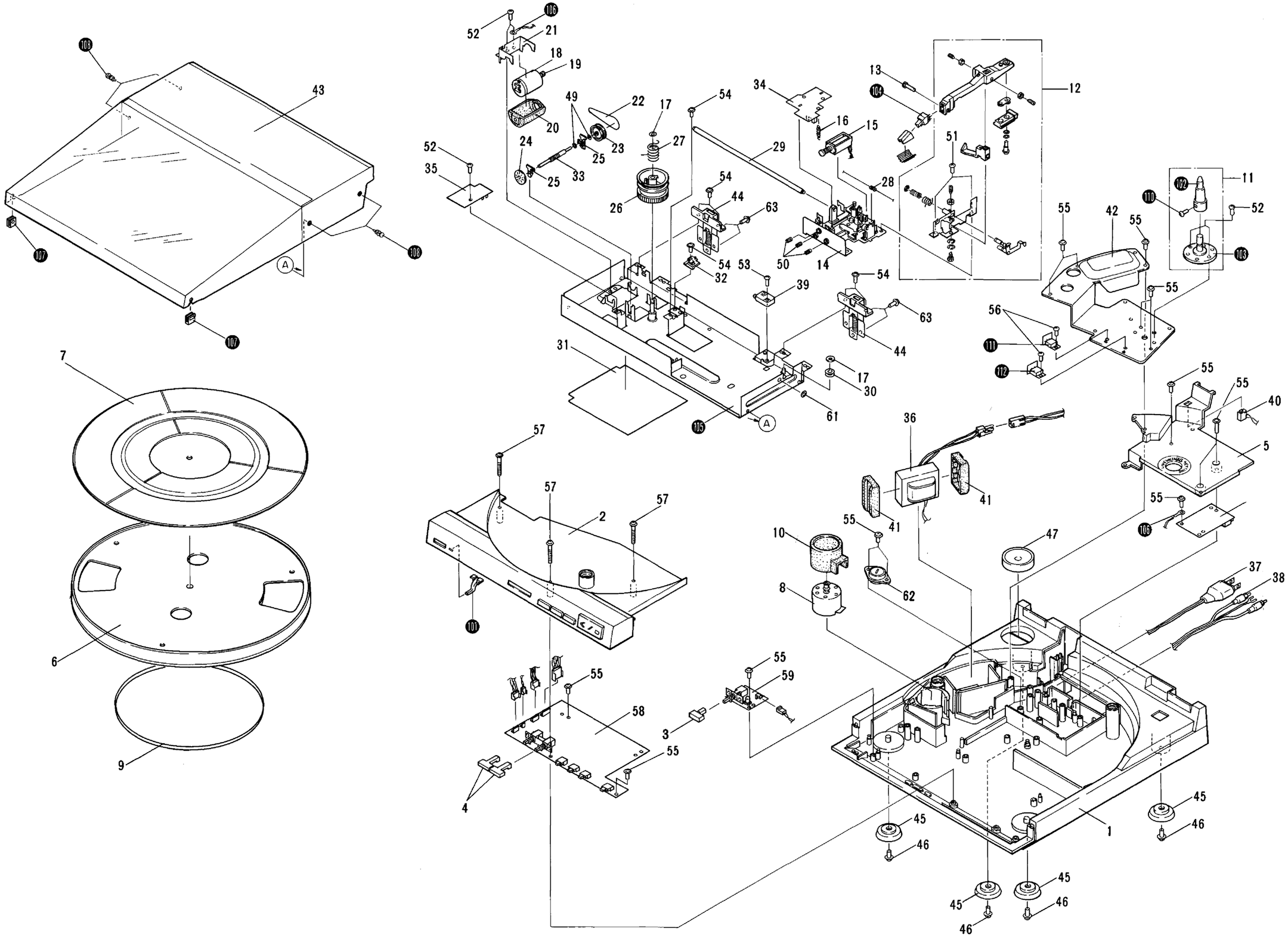

NOTES:

- *Parts without part number cannot be supplied.*
- *The ⚠ mark found on some component parts indicates the importance of the safety factor of the part. Therefore, when replacing, be sure to use parts of identical designation.*
- *For your Parts Stock Control, the fast moving items are indicated with the marks ★★ and ★ .*
  ★★ GENERALLY MOVES FASTER THAN ★
  This classification shall be adjusted by each distributor because it depends on model number, temperature, humidity, etc.

Mark	No.	Part No.	Description
	1.	PNY-301	Panel
	2.	PXB-437	Front panel assembly
	3.	PAC-206	Power knob
	4.	PAC-207	Knob (A)
	5.	PNY-311	Cord cover
	6.	PNR-207	Turntable platter
	7.	PEA-073	Rubber mat assembly
	8.	PYY-174	Motor assembly
★★	9.	PEB-224	Belt
	10.	PEB-278	Damper rubber
	11.	PXB-421	Shaft bearing assembly
	12.	PPD-678	Tone arm assembly
	13.	PBA-170	Screw
	14.	PNY-273	Carriage
★	15.	PXB-392	Solenoid assembly
	16.	PBH-406	Carriage spring
	17.	WT31D054D025	
★★	18.	PXM-137	Driver motor
★★	19.	PNX-498	Motor holder
	20.	PEB-268	Damper rubber
	21.	PNC-325	Motor holder
★★	22.	PEB-097	Belt
★★	23.	PNY-190	Pulley
	24.	PNY-191	Slit plate
	25.	PNW-391	Collar
	26.	PNY-192	Worm wheel
	27.	PBH-391	Tension spring
	28.	PLB-237	Fixer
	29.	PLB-254	Guide bar
★★	30.	PNY-263	Pulley
	31.	PAM-143	Base sheet
	32.	PNY-258	Wire guide
	33.	PNW-485	Worm unit
	34.	PWX-090	Carriage board assembly
	35.	PWX-088	Mechanism base board assembly
⚠ ★	36.	PTX-062	Power transformer assembly
⚠	37.	PDF-220	Power cord assembly
	38.	PDX-016	PU cord assembly
★★	39.	PSH-007	Slide switch (Arm rest SW.)
★★	40.	PSH-007	Slide switch (Cover O/C SW.)
	41.	PEB-279	Damper rubber
	42.	PNC-346	Transformer cover

Mark	No.	Part No.	Description
	43.	PXB-422	Dust cover assembly
	44.	PXB-423	Hinge assembly
	45.	PEB-277	Insulator
	46.	PBA-159	Screw
	47.	N93-603	45 adaptor
	48.	.....	
	49.	WA21D040D025	
	50.	.....	
	51.	PSZ30P050FMC	
	52.	PSZ30P060FZK	
	53.	PBA-138	Screw
	54.	ISZ30P080FZK	
	55.	IPC30P100FMC	
	56.	PSZ30P060FMC	
	57.	IPC30P290FMC	
⚠	58.	XWM-188	Control board Unit
	59.	XWS-038	Switch board unit
	60.	XWX-187	PU board unit
	61.	WT42D070D25	
	62.	PSB-017	Line voltage selector
	63.	IPC30P100FZK	
	101.		Lens
	102.		Shaft bearing metal unit
	103.		Spindle base unit
	104.		Cartridge assembly (PC-290T)
	105.		Mechanism base unit
	106.		Earth lead wire unit
	107.		Rubber foot
	108.		Plastic rivet
	109.		.....
	110.		Screw
	111.		Transistor board (A) unit
	112.		Transistor board (B) unit

www.hifiengine.com

9. P.C. BOARDS CONNECTION DIAGRAM

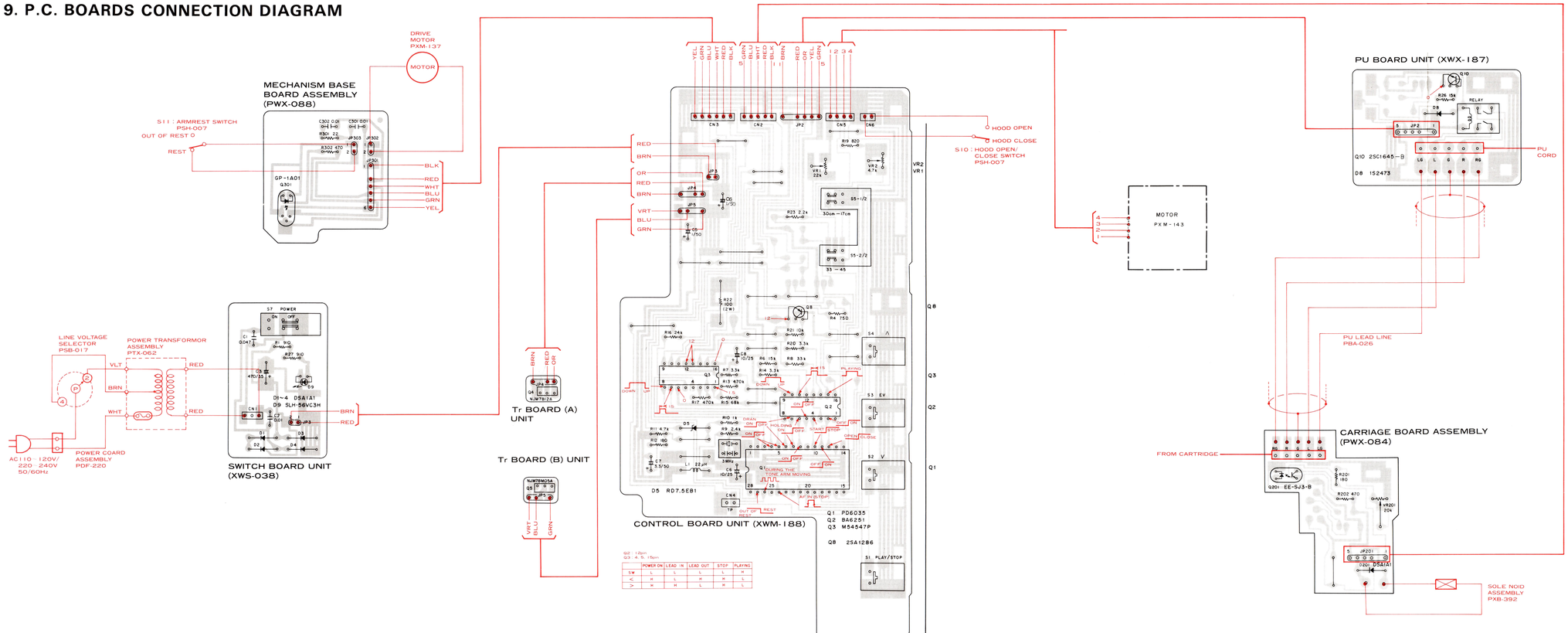

External Appearance of Transistors and ICs

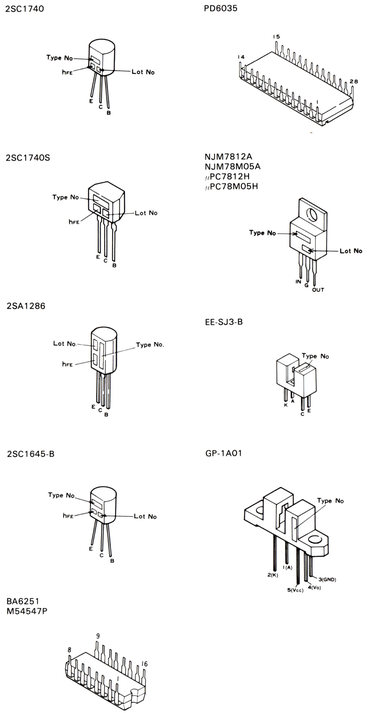

10. SCHEMATIC DIAGRAM

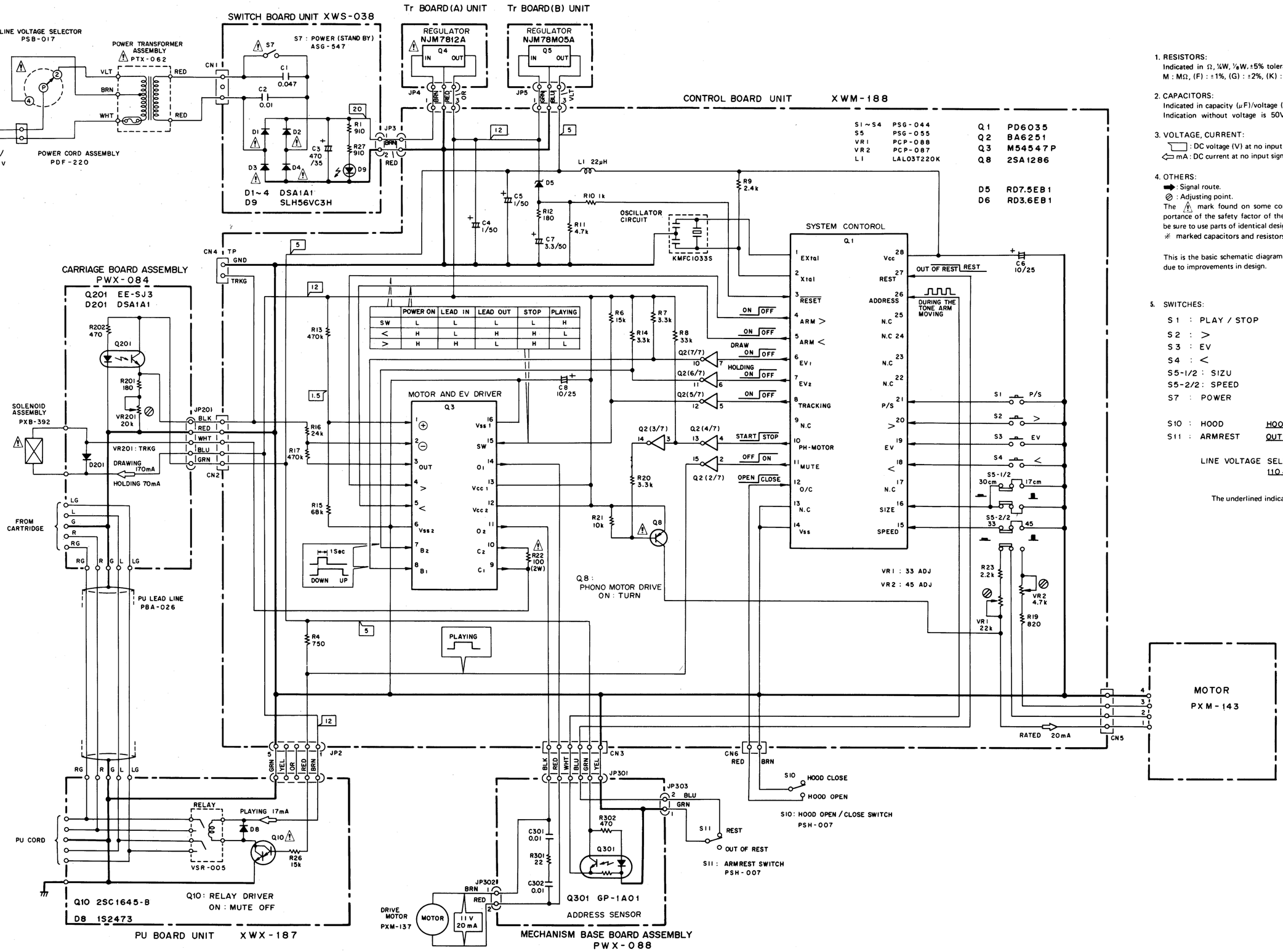

	POWER ON	LEAD IN	LEAD OUT	STOP	PLAYING
SW	L	L	L	L	H
<	H	L	H	H	L
>	H	H	L	H	L

1. RESISTORS:
Indicated in Ω, ¼W, ⅛W. ±5% tolerance unless otherwise noted k : kΩ, M : MΩ, (F) : ±1%, (G) : ±2%, (K) : ±10% (M); ±20% tolerance

2. CAPACITORS:
Indicated in capacity (μF)/voltage (V) unless otherwise noted p : pF
Indication without voltage is 50V except electrolytic capacitor.

3. VOLTAGE, CURRENT:
: DC voltage (V) at no input signal
mA : DC current at no input signal

4. OTHERS:
: Signal route.
: Adjusting point.
The ⚠ mark found on some component parts indicates the importance of the safety factor of the part. Therefore, when replacing, be sure to use parts of identical designation.
※ marked capacitors and resistors have parts numbers.

This is the basic schematic diagram, but the actual circuit may vary due to improvements in design.

5. SWITCHES:

S1	PLAY / STOP	ON —	OFF
S2	>	ON —	OFF
S3	EV	ON —	OFF
S4	<	ON —	OFF
S5-1/2	SIZU	17cm —	30cm
S5-2/2	SPEED	45rpm —	33rpm
S7	POWER	ON —	OFF
S10	HOOD	HOOD OPEN —	HOOD CLOSE
S11	ARMREST	OUT OF REST —	REST

LINE VOLTAGE SELECTOR
110~120V — 220~240V

The underlined indicates the switch position.

www.hifiengine.com

11. ELECTRICAL PARTS LIST

NOTES:

- *When ordering resistors, first convert resistance values into code form as shown in the following examples.*

  Ex. 1 When there are 2 effective digits (any digit apart from 0), such as 560 ohm and 47k ohm (tolerance is shown by J=5%, and K=10%).

560Ω	*56 × 10¹*	*561 ..... RD¼PS* 5 6 1	*J*
47kΩ	*47 × 10³*	*473 ..... RD¼PS* 4 7 3	*J*
0.5Ω	*0R5*	*..... RN2H* 0 R 5	*K*
1Ω	*010*	*..... RS1P* 0 1 0	*K*

  Ex. 2 When there are 3 effective digits (such as in high precision metal film resistors).

5.62kΩ	*562 × 10¹*	*5621 .... RN¼SR* 5 6 2 1	*F*

- *The ⚠ mark found on some component parts indicates the importance of the safety factor of the part. Therefore, when replacing, be sure to use parts of identical designation.*
- *For your Parts Stock Control, the fast moving items are indicated with the marks ★★ and ★ .*

  ★★ GENERALLY MOVES FASTER THAN ★

  This classification shall be adjusted by each distributor because it depends on model number, temperature, humidity, etc.

Miscellaneous

P.C. BOARD ASSEMBLIES

Mark	Symbol & Description	Part No.
⚠	Control board unit	XWM-188
	Switch board unit	XWS -038
	PU board unit	XWX-187
	Transistor board (A) unit	Non supply
	Transistor board (B) unit	Non supply
	Carriage board assembly	PWX-090
	Mechanism base board assembly	PWX-088

OTHERS

Mark	Symbol & Description	Part No.
★★	Motor	PXM-143
★★	Drive motor	PXM-137
⚠ ★	Power transformer assembly	PTX-062
⚠	Power cord assembly	PDF-220
	PU cord assembly	PDX-016
★★	Slide switch (Arm rest (SW, Hood D/C SW.)	PSH-007
★	Solenoid assembly	PXB-392
★★	Line voltage selector	PSB-017

Control Board Unit (XWM-188)

SEMICONDUCTORS

Mark	Symbol & Description	Part No.
★★	Q1	PD6035
★★	Q2	BA6251
★★	Q3	M54547P
⚠ ★★	Q8	2SA1286
★	D5	RD7.5EB1 (RD7.5EB2)

SWITCHES

Mark	Symbol & Description	Part No.
★★	S1–S4 (<, EV, >, P/S)	PSG-044
★★	S5 (SIZE, SPEED)	PSG-055

COIL

Mark	Symbol & Description	Part No.
	L1 22μH	LAL03T220K

CAPACITORS

Mark	Symbol & Description	Part No.
	C6,C8	CEA100M25
	C4,C5	CEA1R0M50
	C7	CEA3R3M50

RESISTORS

NOTE: When ordering resistors, convert the resistance value into code form, and then rewrite the part no. as before.

Mark	Symbol & Description	Part No.
★	VR1 Semi-fixed 22kΩ-B	PCP-088
★	VR2 Semi-fixed 4.7kΩ-B	PCP-087
⚠	R22	RS2LMF101J
	Other resistors	RD1/6PM□□□J

OTHERS

Mark	Symbol & Description	Part No.
★	X1 Ceramic resonator	KMFC1033S

www.hifiengine.com

Switch Board Unit (XWS-038)

SEMICONDUCTORS

Mark	Symbol & Description	Part No.
⚠ ★	D1–D4	DSA1A1 (DSA1A2)
★	D9	SLH-56VC3H

SWITCH

Mark	Symbol & Description		Part No.
⚠ ★★	S7	Switch (Power)	ASG-547

CAPACITORS

Mark	Symbol & Description		Part No.
	C1		CKDYF473Z50
	C2		CKDYF103Z50
	C3	Electrolytic (470/35)	PCL-051

RESISTORS

Mark	Symbol & Description	Part No.
	R1,R27	RD1/6PM911J

PU Board Unit (XWX-187)

SEMICONDUCTORS

Mark	Symbol & Description	Part No.
⚠ ★★	Q10	2SC1645-B
★	D8	1S2473

RELAY

Mark	Symbol & Description		Part No.
★★		Relay	VSR-005

RESISTOR

Mark	Symbol & Description	Part No.
	R26	RD1/6PM153J

Transistor Board (A) Unit

SEMICONDUCTOR

Mark	Symbol & Description	Part No.
⚠ ★★	Q4	NJM7812A (μPC7812H)

Transistor Board (B) Unit

SEMICONDUCTOR

Mark	Symbol & Description	Part No.
★★	Q5	NJM78M05A (μPC78M05H)

Carriage Board Assembly (PWX-090)

SEMICONDUCTORS

Mark	Symbol & Description	Part No.
★	Q201	EE-SJ3-B (Rank B)
★	D201	DSA1A1 (1SR35-100A)

RESISTORS

NOTE: When ordering resistors, convert the resistance value into code form, and then rewrite the part no. as before.

Mark	Symbol & Description	Part No.
★	VR201 Semi-fixed 20kΩ-B	PCP-083
	R201,R202	RD1/6PM□□□J

Mechanism Base Board Assembly (PWX-088)

SEMICONDUCTOR

Mark	Symbol & Description	Part No.
★	Q301	GP-1A01

CAPACITORS

Mark	Symbol & Description	Part No.
	C301,C302	CKDYF103Z50

RESISTORS

NOTE: When ordering resistors, convert the resistance value into code form, and then rewrite the part no. as before.

Mark	Symbol & Description	Part No.
	R301,R302	RD1/6PM□□□J

www.hifiengine.com

12. TROUBLESHOOTING

12.1 MAIN CHART

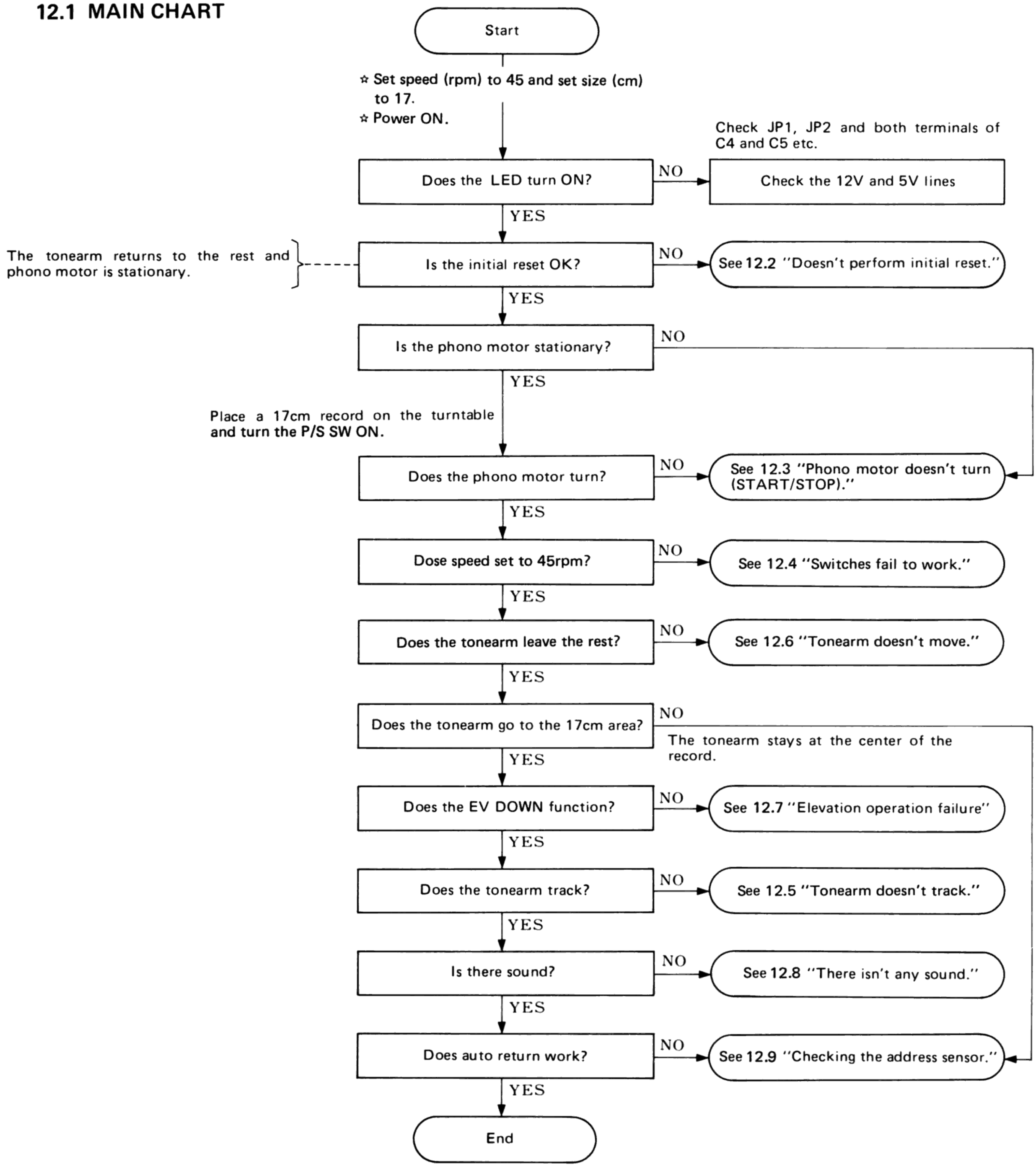

www.hifiengine.com

12.2 DOESN'T PERFORM INITIAL RESET

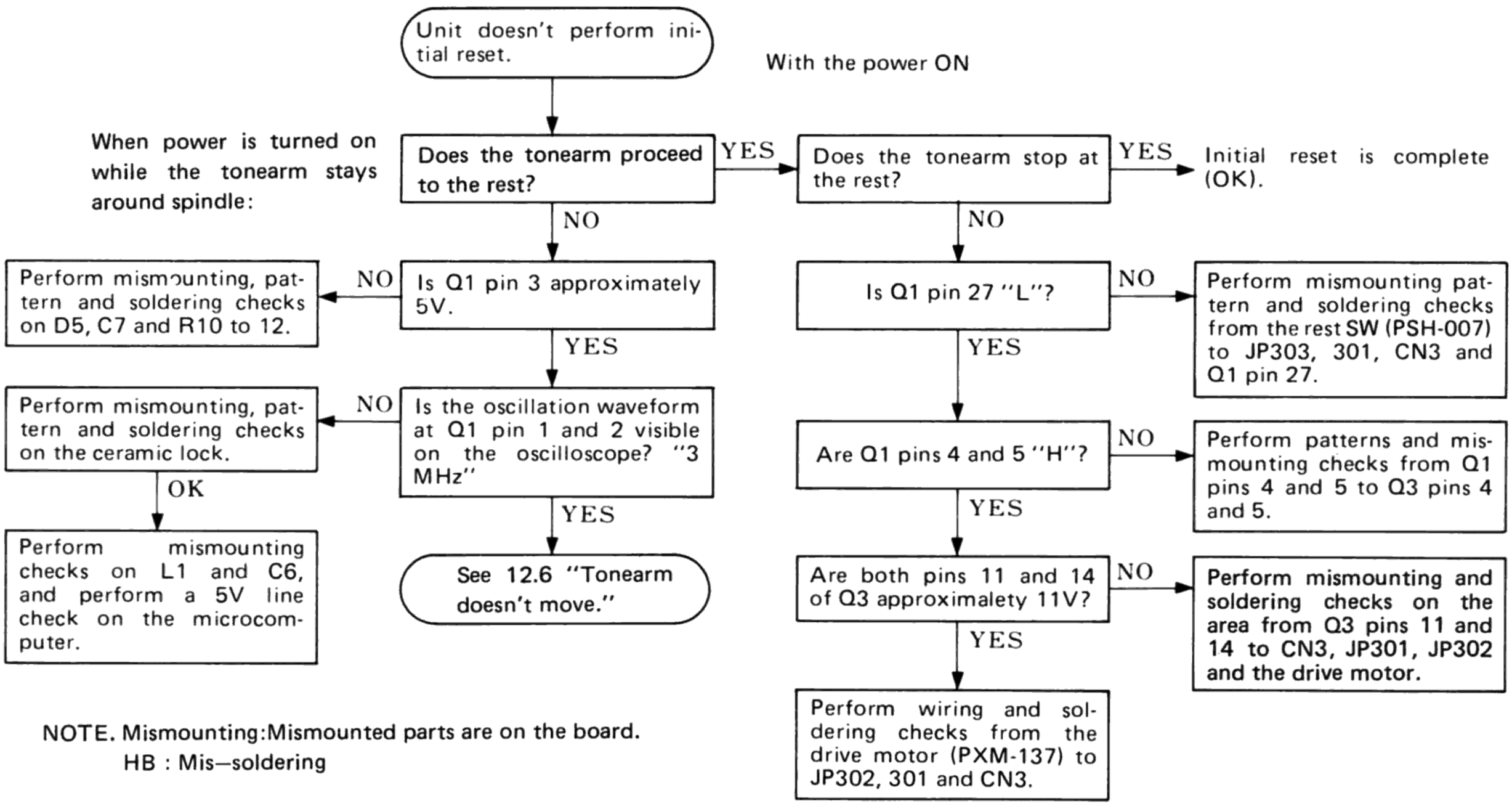

NOTE. Mismounting:Mismounted parts are on the board.
HB : Mis—soldering

12.3 PHONO MOTOR DOESN'T TURN (START/STOP)

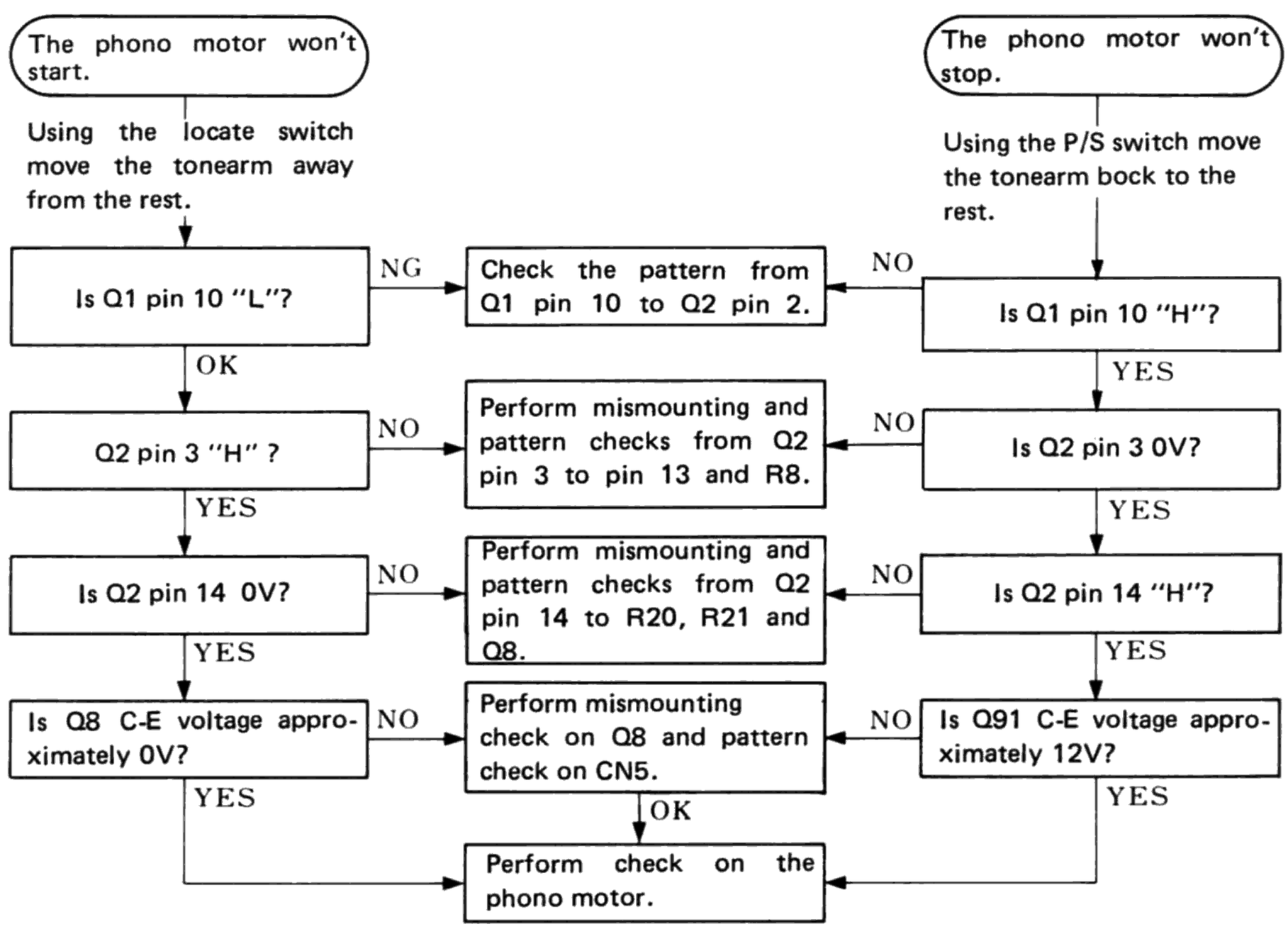

www.hifiengine.com

12.4 SWITCHES FAIL TO WORK

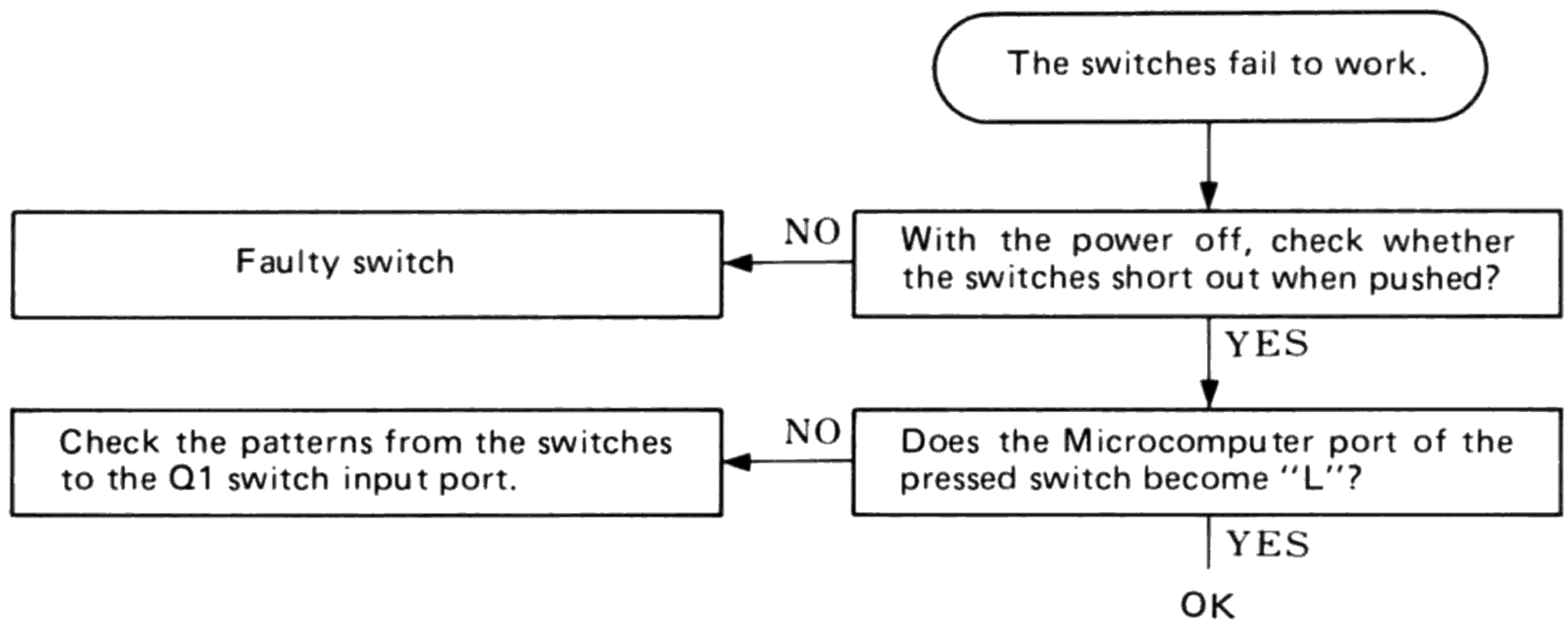

12.5 TONEARM DOESN'T TRACK

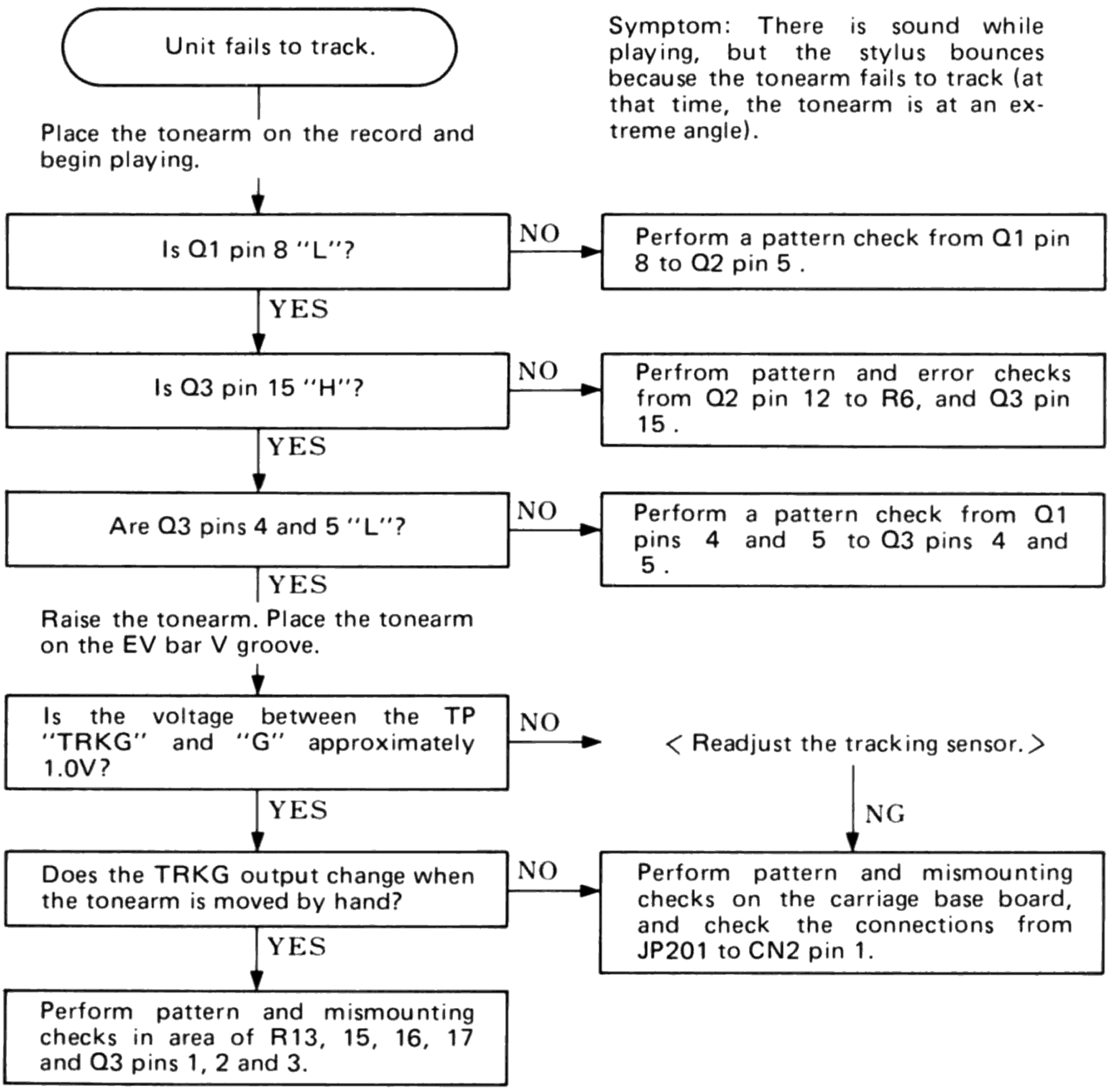

www.hifiengine.com

12.6 TONEARM DOESN'T MOVE

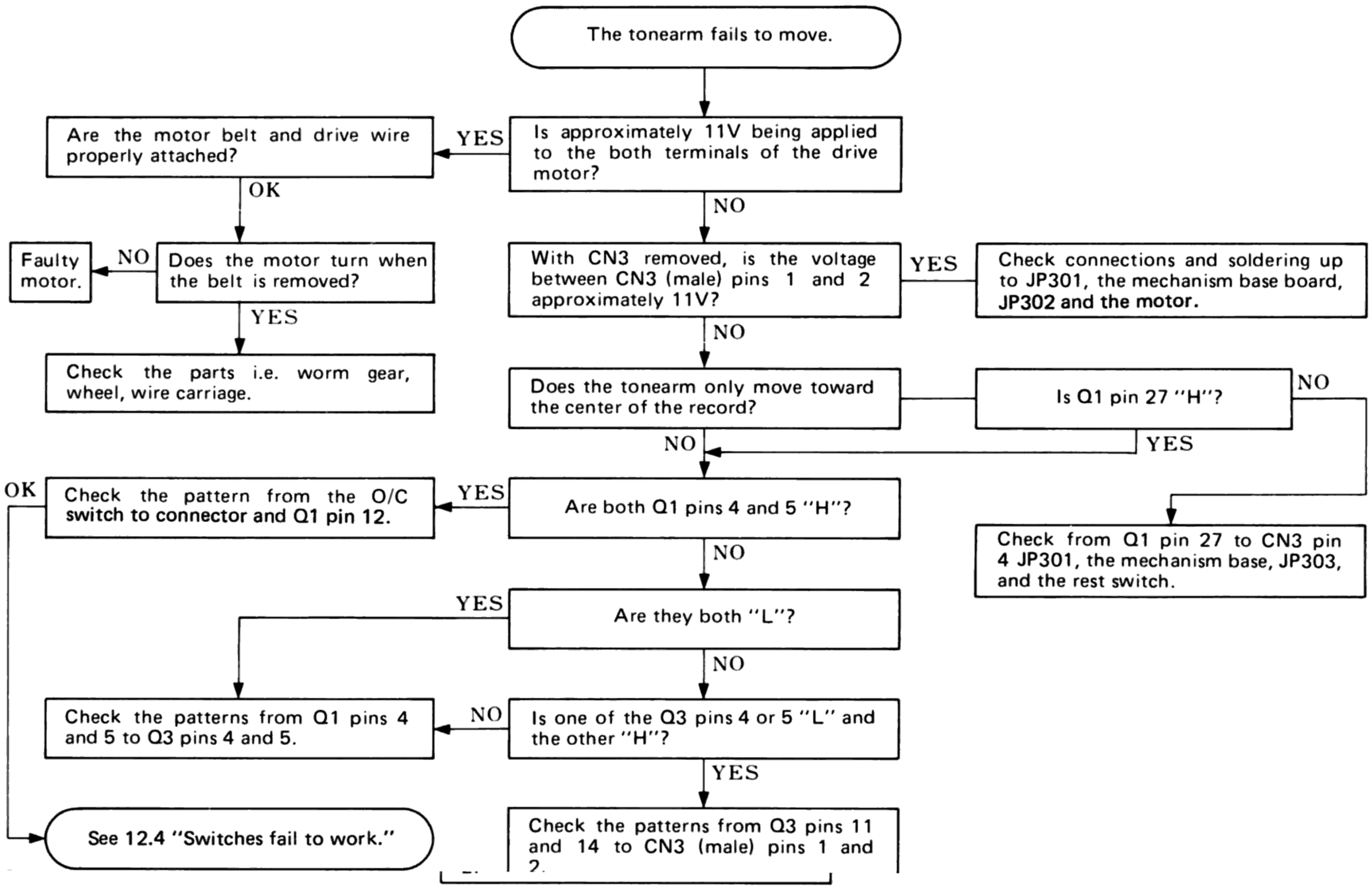

www.hifiengine.com

12.7 ELEVATION OPERATION FAILURE

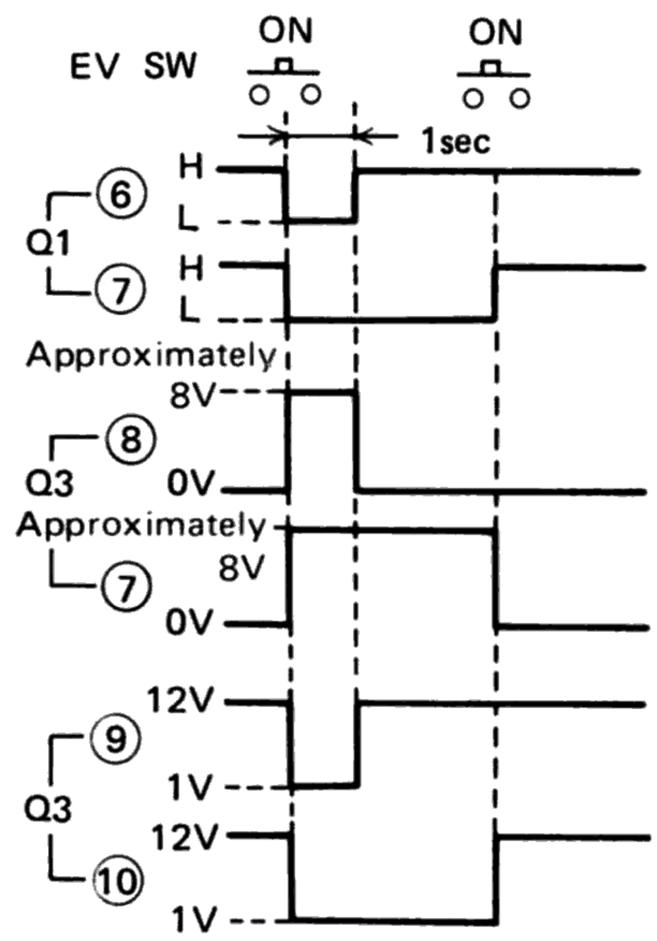

Note: The EV UP/DN doesn't work when the tonearm is on the rest.

Elevation operation failure

Place a record on the turntable and move the tonearm to the play position.

EV SW ON

At that time do Q1 pins 6 and 7 alternate "H" and "L"?
- NO → Check the patterns and soldering from Q1 pins 6 and 7 to Q2 pins 7 and 6.
- YES ↓

At that time does the voltage of Q3 pins 7 and 8 change from about 0V to about 8V?
- NO → Check the patterns and soldering from Q2 pins 10 and 11 to Q3 pins 7 and 8.
- YES ↓

At that time does the voltage of Q3 pins 9 and 10 change from about 12V to about 1V?
- NO → Is CN2 properly connected?
  - OK → Perform error and pattern checks from Q3 pins 9 and 10 to R22 and CN2 pin3.
    - OK ↓
  - NO → Perform error, connection, patterns and soldering checks from CN2 (female) to JP201, D201 and the solenoid.
- YES ↓

At that time do both terminals of the EV solenoid draw the following voltages?

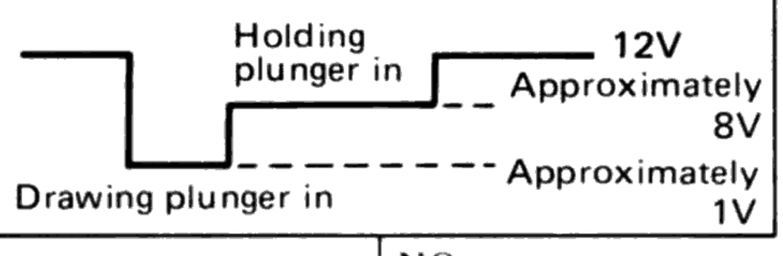

- Check for a faulty mechanism and whether the plunger is catching on something.
- NO ↓

With the solenoid leads unsoldered, is the winding resistance of the solenoid about 70Ω?
- NO → Faulty solenoid.
- YES ↓

(Being careful of which way D201 is facing) With CN2 (female) removed, do pins 2 and 3 measure approximately 70Ω?
- NO → Perform mismounting and pattern checks from CN2 (female) to JP201 and D201.
- YES ↓

Perform error and pattern checks from Q3 pin 9 and 10 to R40 and CN2 pin 3.

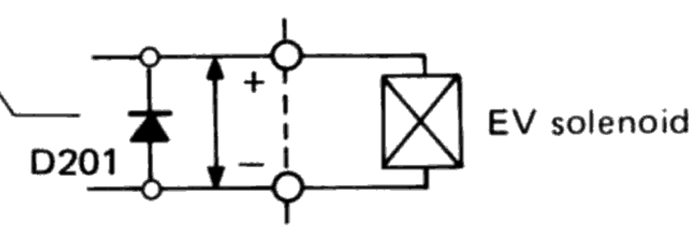

www.hifiengine.com

12.8 THERE ISN'T ANY SOUND

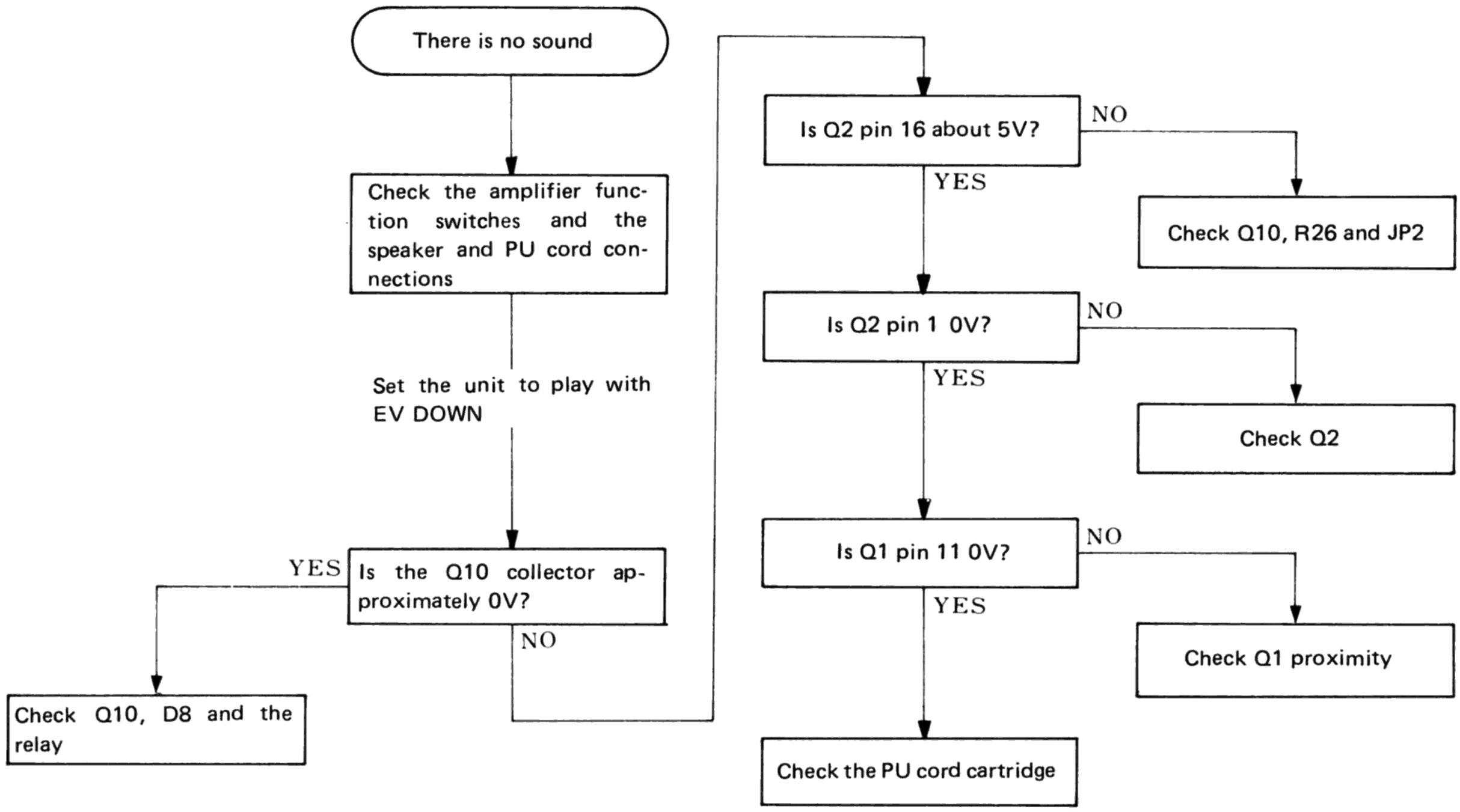

12.9 ADDRESS SENSOR CHECK

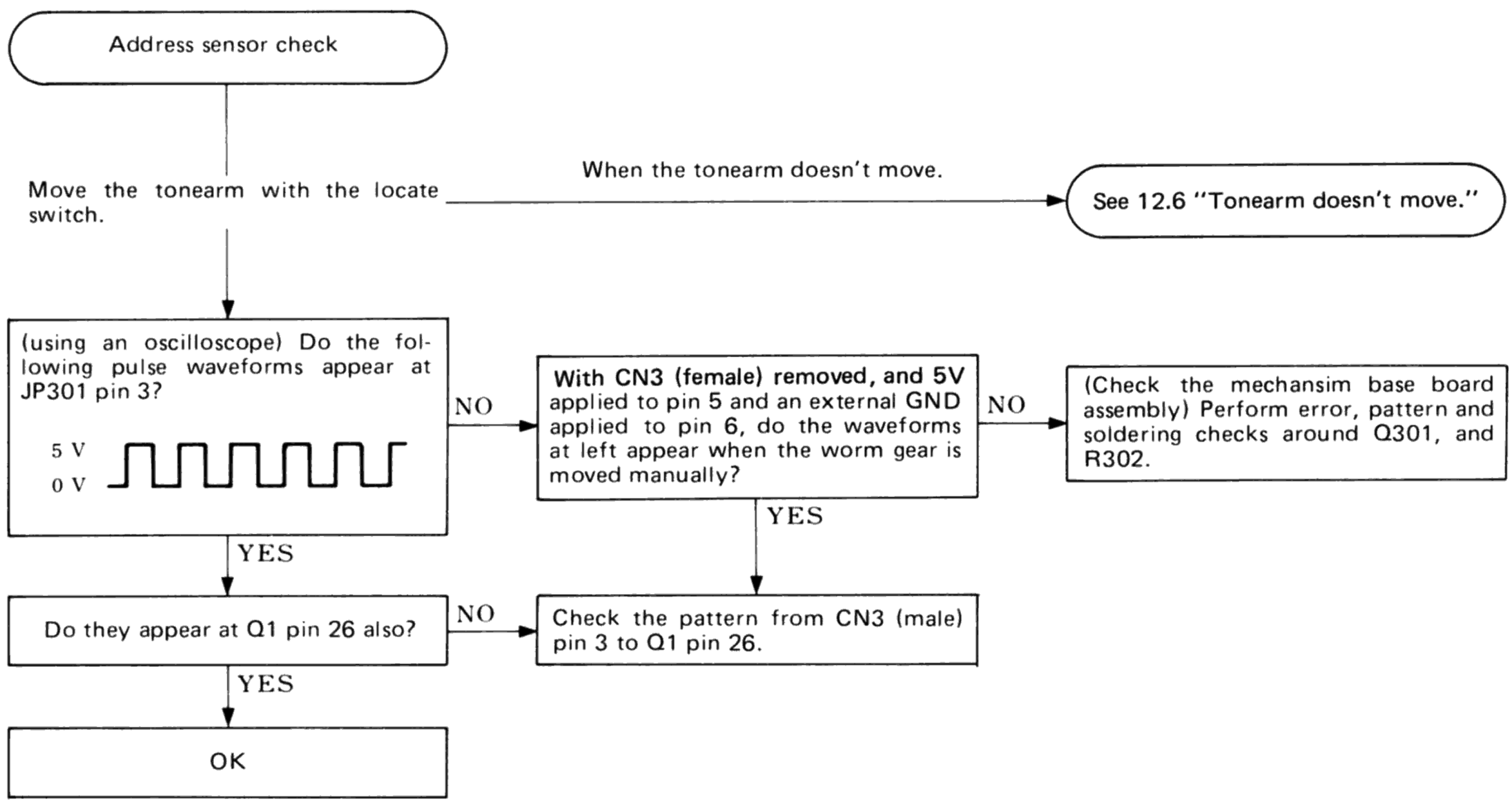

www.hifiengine.com

13. ADJUSTMENTS

13.1 TONE ARM ADJUSTMENT

1. With the power ON place a test record (PLS-2001 or PLS-4001 side A up) on the turntable. Set the SIZE switch to 30cm and SPEED switch to 33 rpm.
2. Press the PLAY/STOP button and check the position of the tone arm as it comes to rest on the record.
   If the stylus is displaced, turn screw 1 and until it comes within the count shown below.
   Note:
   After the landing, move the tonearm toward inside of record by more than 10mm from the rest (30cm landing position) using the LOCATE switch. Depress the P/S switch ON, and replace the tonearm on the rest.
3. Lift the dust cover and turn the adjustment screw until the tone arm comes into line with the record.

- When the tone arm comes to rest to the right of the lead-in groove, (when the count is lower than the standard count tolerance) turn the adjustment screw counterclockwise.
- When the tone arm comes to rest to the left of the lead-in groove, (when the count is higher than the standard count tolerance) turn the adjustment screw counterclockwise.
- When using the test record the position will be set for 30cm records.

Test record	Adjustment position
PLS2001	310 ± 3 counts
PLS4001	13 ± 6 counts

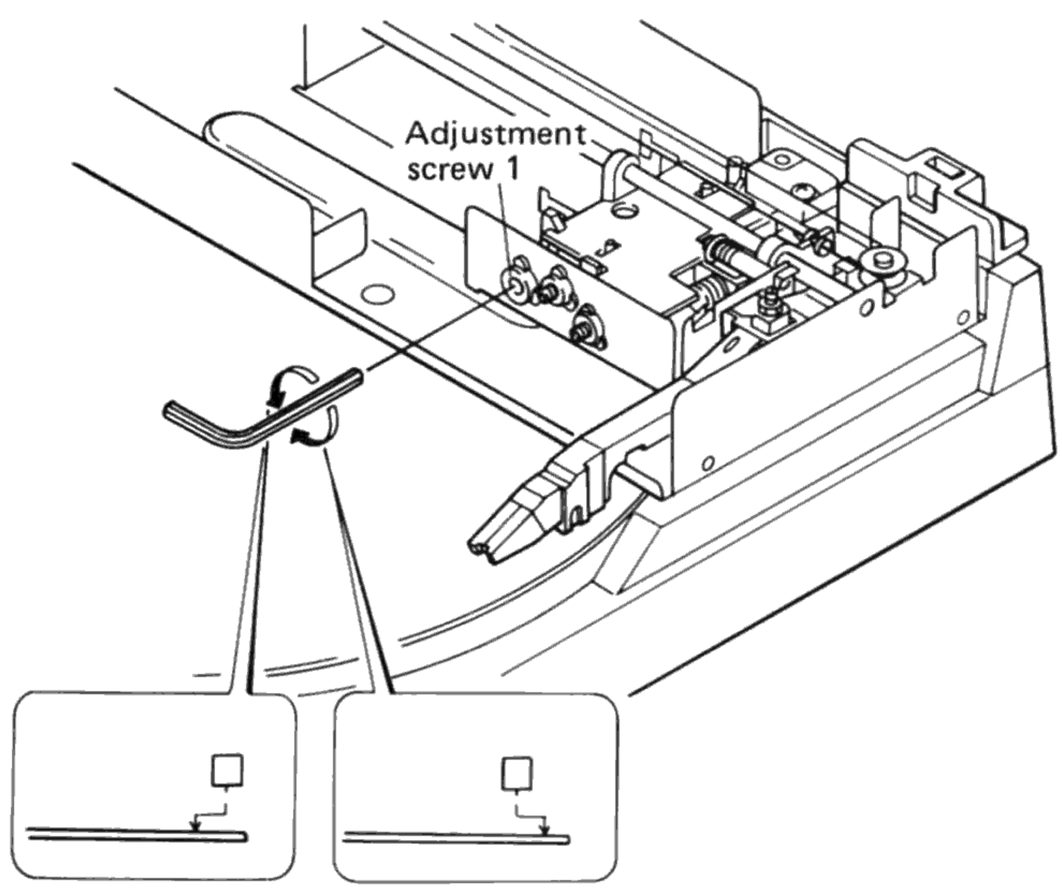

Fig. 13.1 Tone Arm Adjustment

13.2 TRACKING SENSOR GAIN AND OFFSET ADJUSTMENT

- Gain adjustment

1. Remove the dust cover and tunetable. And power switch on.
2. Connect a DC voltmeter to CN4 pin ①(GND) and pin ② (TRKG).
3. Turn screw 2 counterclockwise and pull the carriage unit forward.
4. While pushing the tone arm toward the center (as shown in the illustration) adjust VR201 (TRKG) until the DC voltmeter registers 3V ±0.1V.

- **Offset Adjustment**

5. Return the tone arm to the rest position. (It will return by itself when you release it.)
6. To adjust it, turn screw 2 clockwise until the DC voltmeter registers 1V ±0.1V.

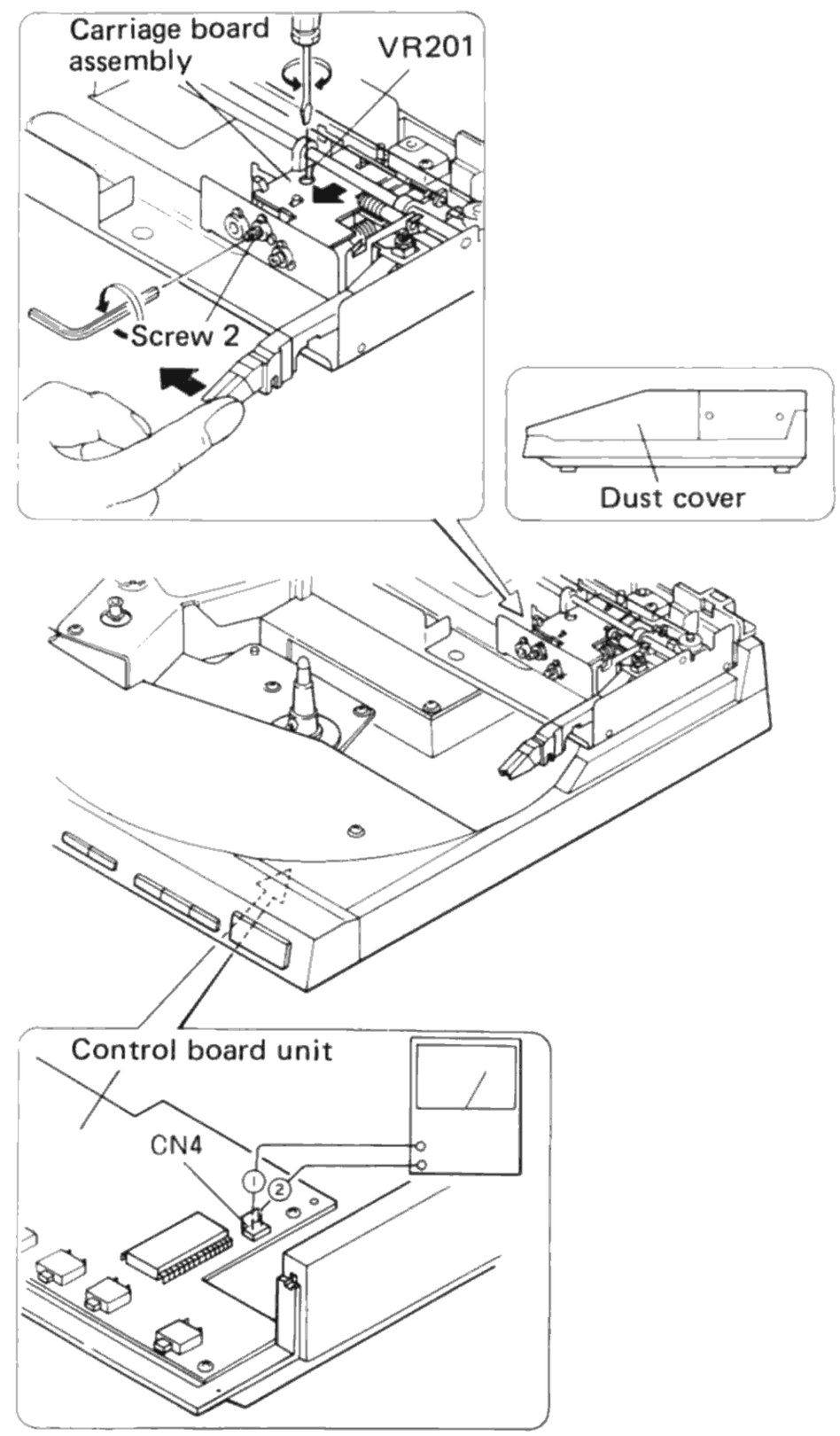

Fig. 13.2 Tracking Sensor Gain and Offset Adjustment

www.hifiengine.com

13.3 TONE ARM HEIGHT ADJUSTMENT

1. With the dust cover off, insert two 11mm spacers (one each on the right and left) to make it the same as when the dust cover and mechanism base are connected.
2. Place a 30cm record on the turntable, turn on the power, and using the locate switch (◀◀) move the tone arm to within approximately 100mm of the center of the turntable.
3. Turn screw 3 until the tip of the needle is 5 to 7mm above the surface of the record.

- Turning the screw clockwise lowers the needle.
- Turning the screw counterclockwise raises the needle.

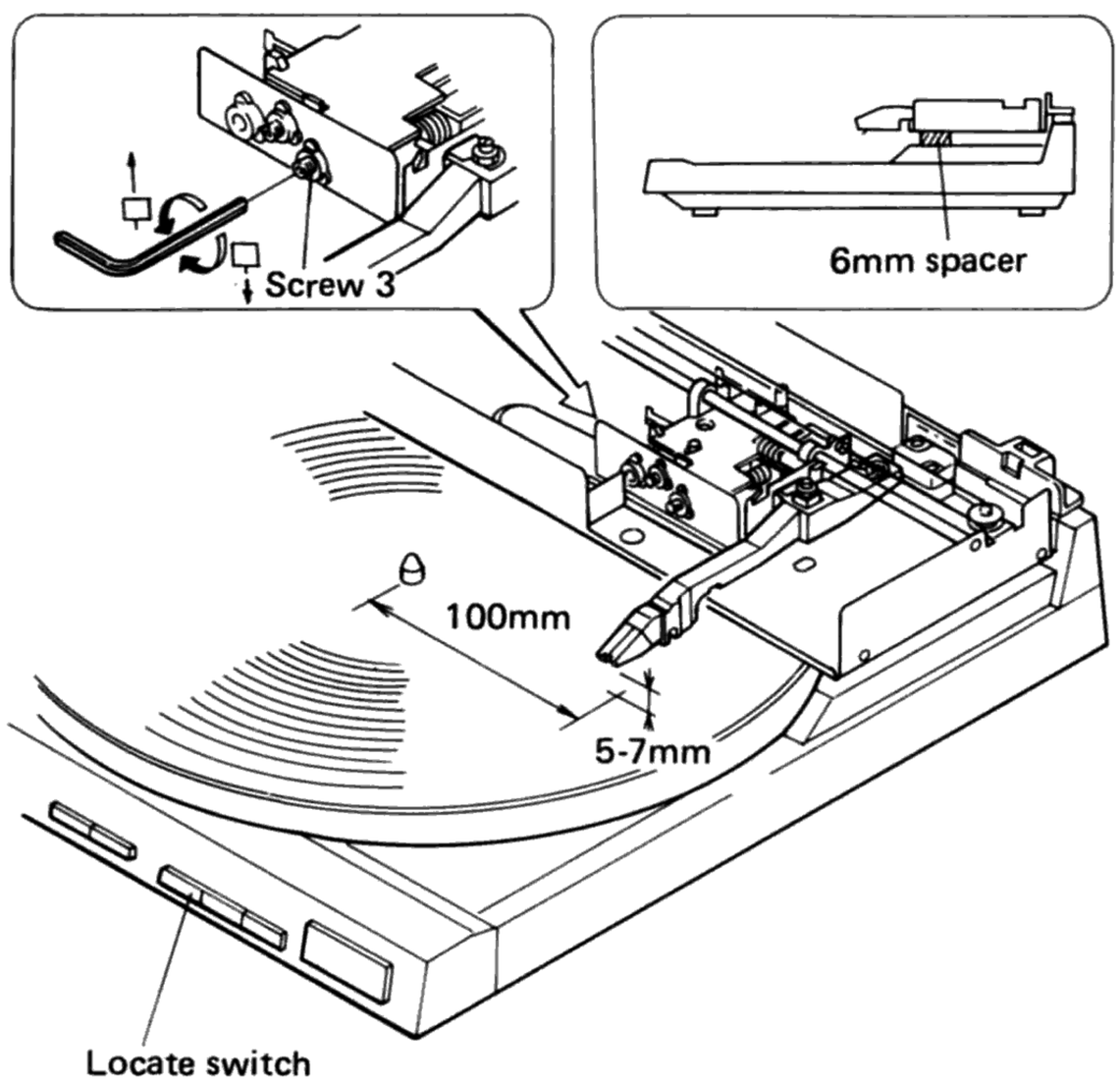

Fig. 13.3 Tone arm height adjustment

13.4 Phono-Motor Speed Adjustment

1. Place the strobe sheet on the platter. Turn on the power switch and the locate-switch (◀◀) to turn the phonomotor.
2. Insert a small screwdriver into the speed adjusting hole on the panel and adjust VR1 and VR2 respectively.

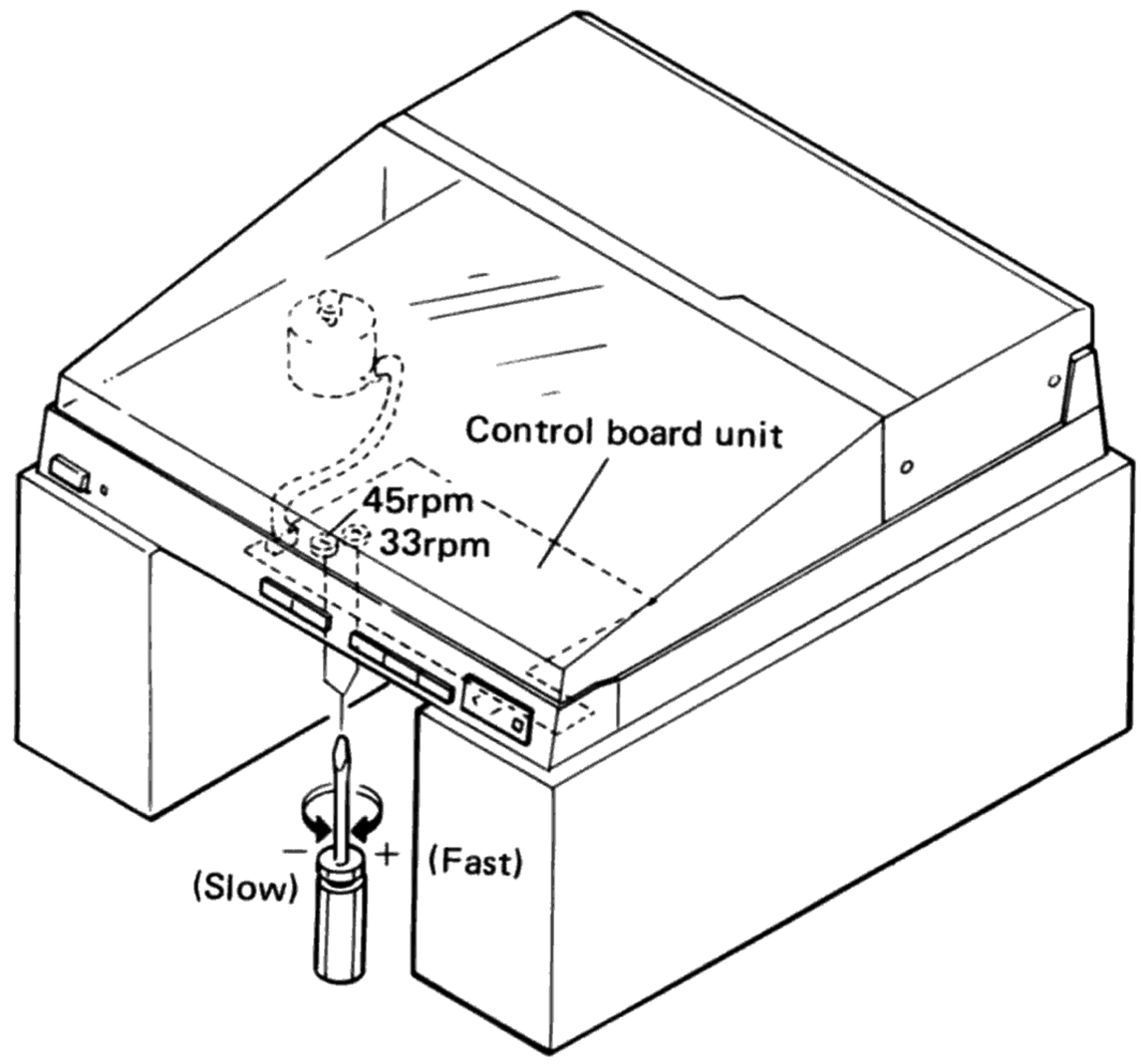

Fig. 13.4 Phono motor speed adjustment

www.hifiengine.com

13. RÉGLAGE

13.1 RÉGLAGE DU BRAS DE PICK-UP

1. En mettant l´appareil sous tension, placer un disque d´essai (PLS-2001 ou PLS-4001, avec le côté A vers le haut) sur la platine de lecture de disques.
2. Presser le bouton de reproduction/arrêt (PLAY/STOP) et vérifier la position du bras de pick-up au moment où il se pose sur le disque.
   Si l'aiguille est déplacée, tourner la vis ❶ pour la porter dans les limites des comptes mentionnés ci-après.
   Note:
   Après la descente du bras de pick-up, le déplacer vers l'intérieur du disque d'une distance supérieure à 10 mm à partir de la position de repos (position de descente 30 cm) en utilisant le commutateur LOCATE. Presser le commutateur PLAY/STOP pour le régler sur la position ON (marche) et mettre le bras de pick-up sur sa position de repos.
3. Soulever le couvercle anti-poussière et tourner la vis ❶ de réglage jusqu´à ce que le bras de pick-up soit aligné avec le disque.

- Lorsque le bras de pick-up se pose sur la droite du sillon initial, (au cas où le compte est inférieur à la tolérance normale de compte) tourner la vis ❶ ole réglage dans le sens contraire des aiguilles d´une montre.
- Lorsque le bras de pick-up se pose sur la gauche du sillon initial, (au cas où le compte est supérieur à la tolérance normale de compte (tourner la vis ❶ de réglage dans le sens des aiguilles d´une montre.
- Lorsque l´on utilise le disque d´essai, la position sera réglée pour les disques de 30 cm.

Disque d'essai	Position de réglage
PLS2001 PLS4001	310 ± 3 comptes 13 ± 6 comptes

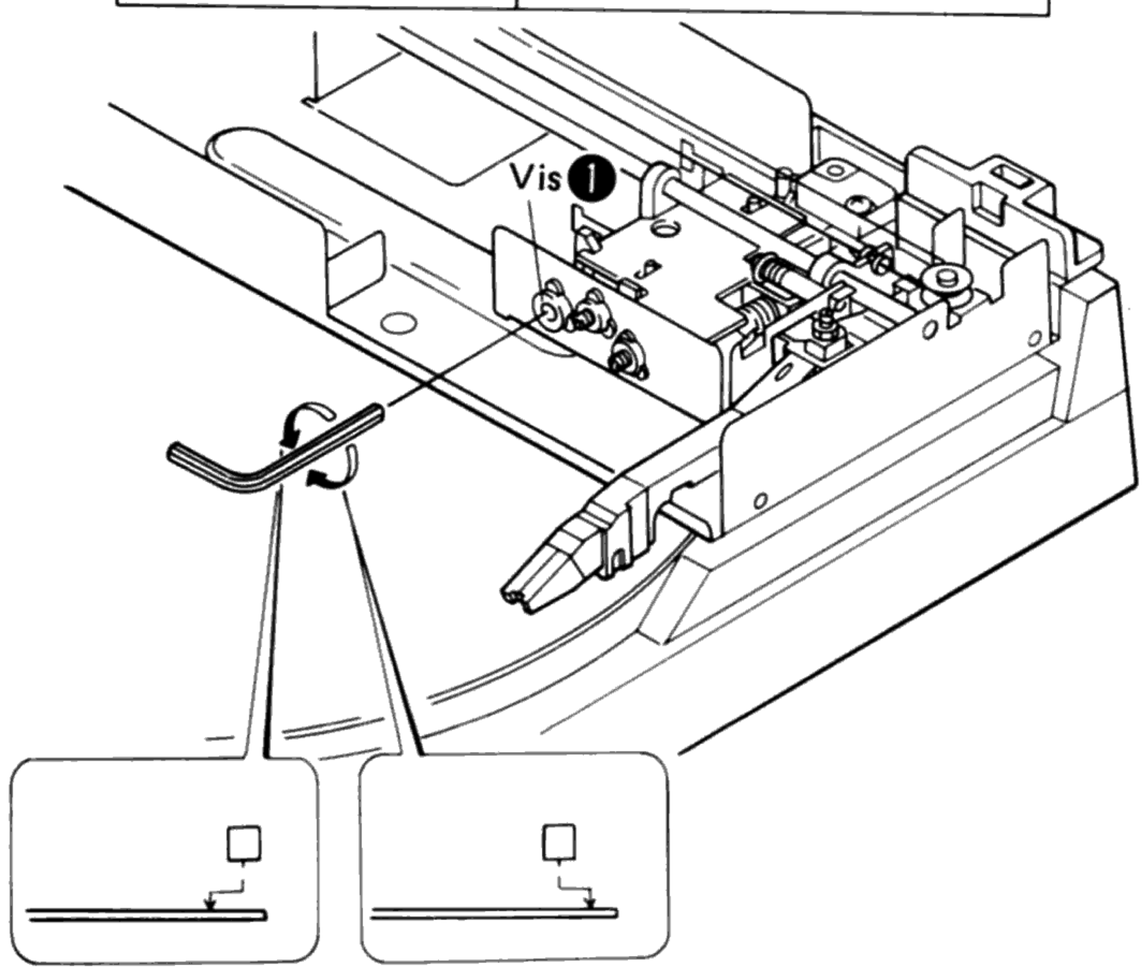

Fig. 13-1 Réglage du bras de pick-up

13.2 RÉGLAGE DU GAIN DU SENSEUR D´ALIGNEMENT ET DU DECENTRAGE

- **Réglage du Gain**

1. Déposer le couvercle anti-poussière et le couvercle du panneau.
2. Connecter un voltmètre CC à la broche No. 1 (GND) et à la broche No. 2 (TRKG) de CN4.
3. Tourner la vis ❷ dans le sens contraire des aiguilles d´une montre et tirer le bloc du chariot en avant.
4. Mettre l´appareil sous tension et tout en poussant le bras de pick-up vers le centre (comme indiqué sur la figure), régler VR201 (TRKG) jusqu´à ce que le voltmètre CC enregistre 3V ± 0,1V.

- **Réglage de Décentrage**

5. Remettre le bras de pick-up sur la position de repos. (Il retournera automatiquement lorsqu´on le relâche).
6. Pour le régler, tourner la vis ❷ dans le sens des aiguilles d´une montre jusqu´à ce que le voltmètre CC enregistre 1V ± 0,1V.

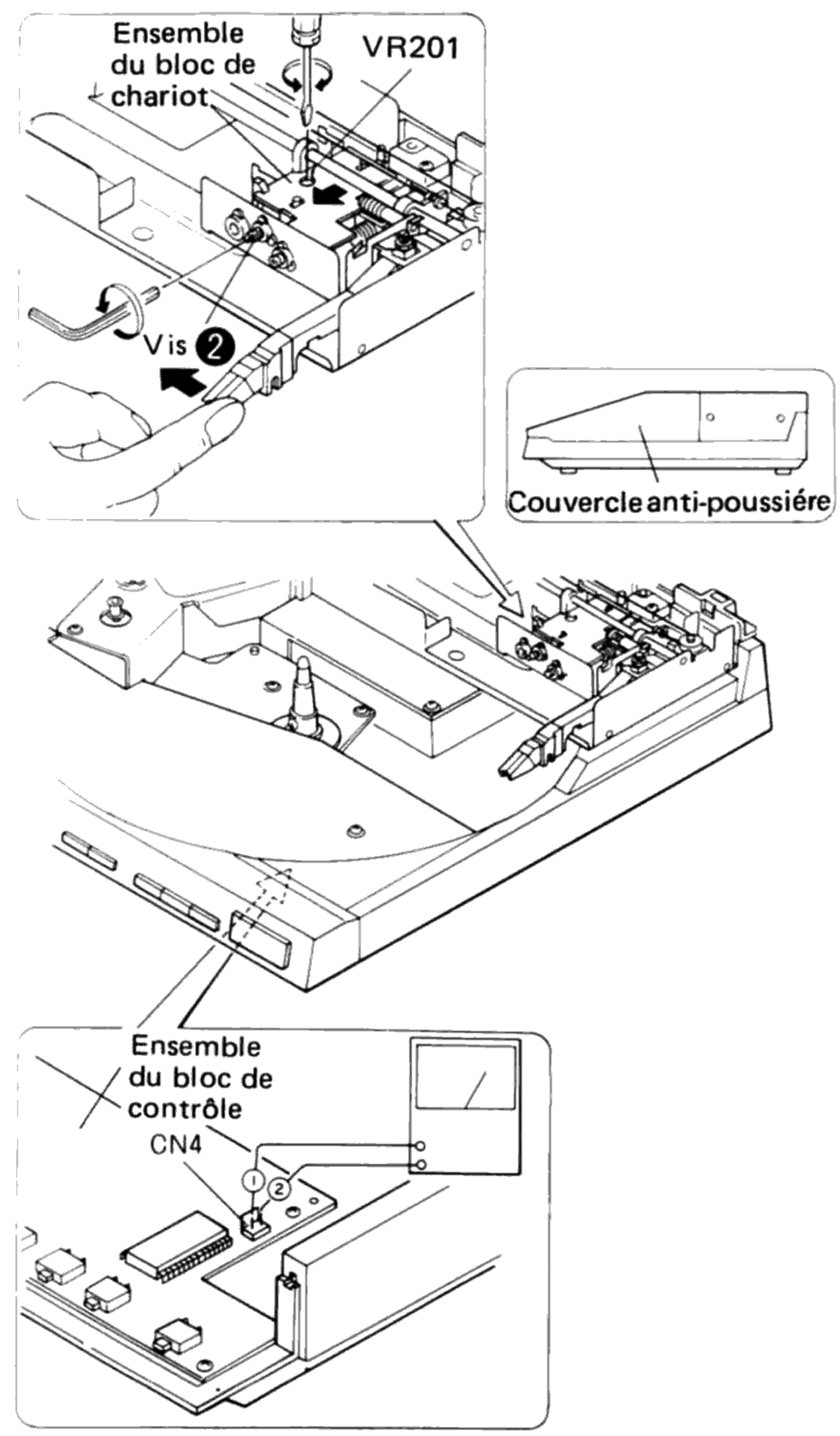

Fig. 13-2 Réglage du gain du senseur d´alignement et du décentrage

www.hifiengine.com

13.3 RÉGLAGE DE LA HAUTEUR DU BRAS DE PICK-UP

1. Avec le couvercle anti-poussière déposé, insérer deux pièces d´écartement de 6 mm (une sur la droite et l´autre sur la gauche) pour retourner à la situation à laquelle le couvercle anti-poussière et la base du mécanisme étaient connectés.
2. Placer un disque de 30 cm sur le plateau, mettre l´ appareil sous tension, et en utilisant le commutateur de location (◀◀), déplacer le bras de pick-up à environ 100 mm du centre du plateau.
3. Tourner la vis ❸ jusqu´à ce que le bout de l´aiguille soit à 5 à 7 mm au-dessus de la surface du disque.

- En tournant la vis dans le sens des aiguilles d´une montre, abaisser l´aiguille.
- En tournant la vis dans le sens contraire des aiguilles d´une montre, soulever l´aiguille.

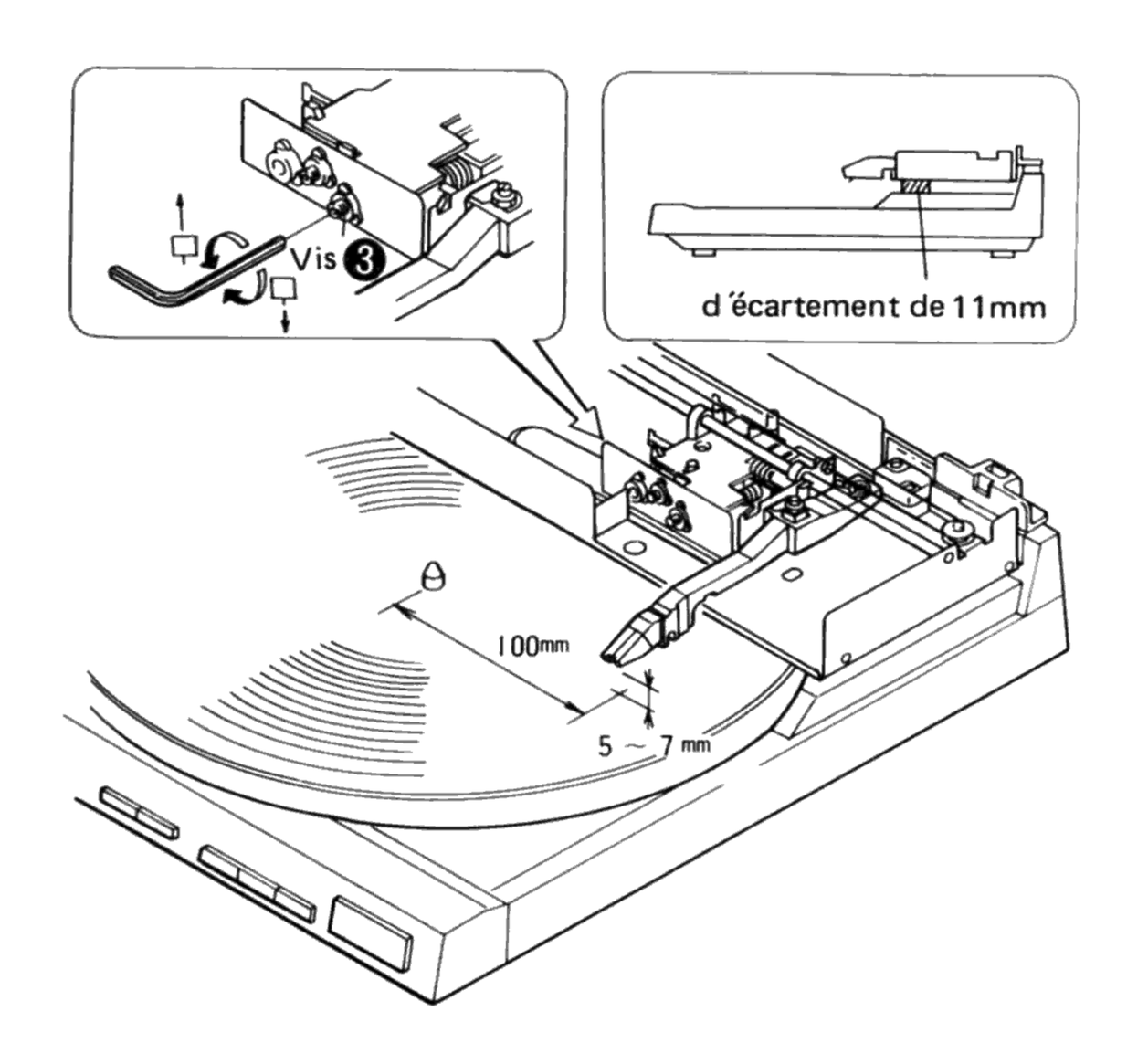

Fig. 13-3 Réglage de la hauteur du bras de pick-up

13.4 RÉGLAGE DE LA VITESSE DU MOTEUR DU LECTEUR DE DISQUE

1. Placer la feuille stroboscopique sur le plateau. Mettre en service le commutateur d´alimentation et le commutateur de positionnement (◀◀) pour mettre le moteur du lecteur de disque en fonctionnement.
2. Introduire un petit tournevis dans le trou de réglage de vistesse placé sur le panneau inférieur et régler respectivement VR1 et VR2.

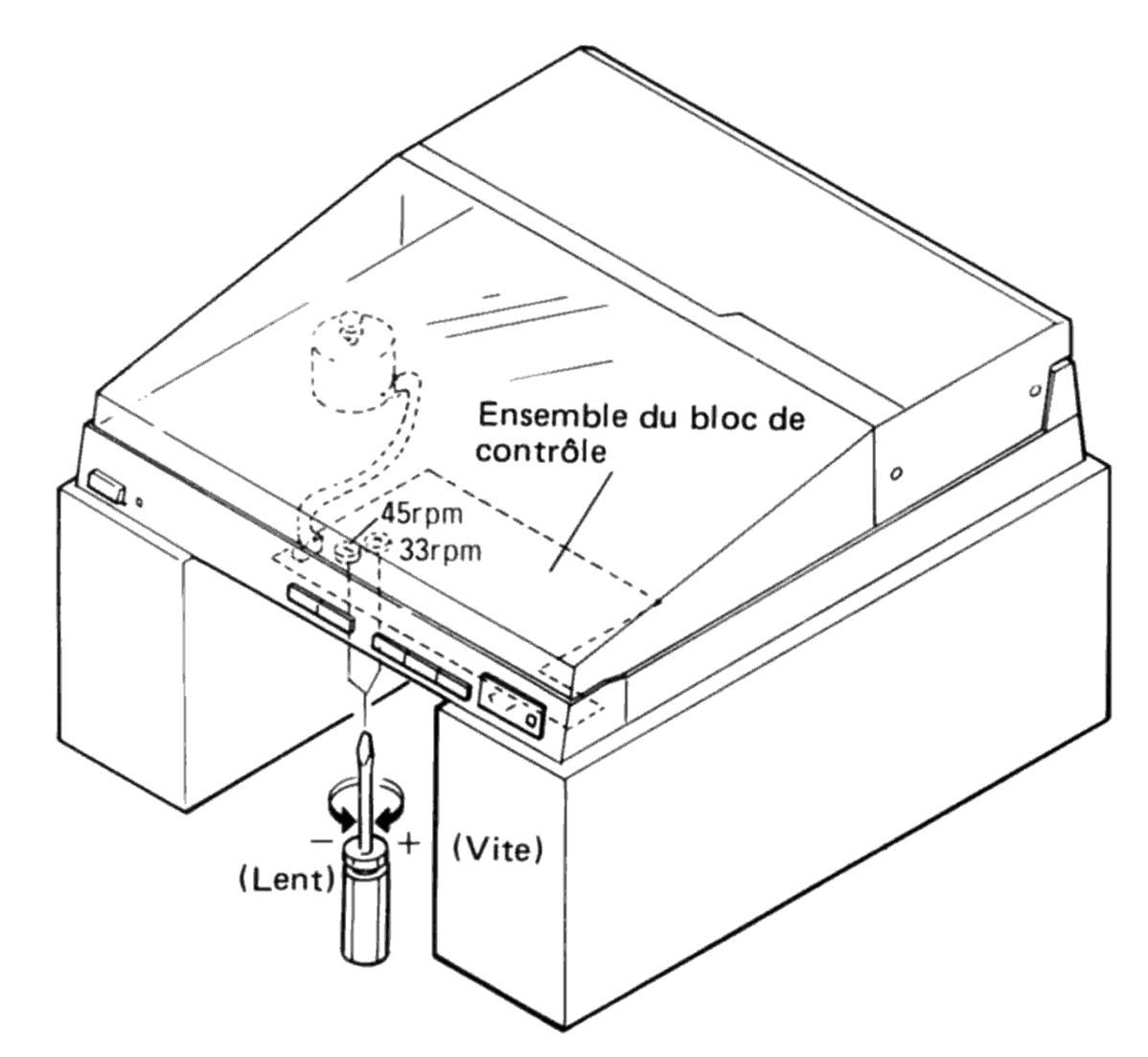

Fig. 13-4 Réglage de la vistesse du moteur du lecteur de disque

www.hifiengine.com

13. AJUSTE

13.1 AJUSTE DEL BRAZO DE FONOCAPTOR

1. Con el aparato encendido, ponga un disco de prueba (PLS-2001 o PLS-4001, lado A hacia arriba), sobre el plato giratorio.
2. Presionar el botón PLAY/STOP (reproducción/parada) y verificar la posición del brazo de fonocaptor cuando se posa sobre el disco.
   Si la aguja está desplazada, girar el tornillo ❶ para moverla en los límites de cuentas como se indica a continuación.
   Observación:
   Después del descanso de la aguja, moverla hacia el interior del disco a una distancia de 10 mm a partir de la posición de descanso (posición de descanso 30 cm) usando el conmutador LOCATE. Presionar el conmutador PLAY/STOP para ajustarlo en la posición ON (encendido) y poner el brazo de fonocaptor en su posición de descanso.
3. Levantar la cubierta para el polvo y girar el tornillo ❶ de ajuste hasta que el brazo de fonocaptor quede alineado con el disco.

- Cuando el brazo de fonocaptor descanse a la derecha de la ranura inicial, (cuando la cuenta es menor que la tolerancia de cuenta estándar), girar el tornillo ❶ de ajuste en el sentido contrario a los punteros del reloj.
- Cuando el brazo de fonocaptor descanse a la izquierda de la ranura de descanso, (cuando la cuenta es mayor que la tolerancia de cuenta estándar), girar el tornillo ❶ de ajuste en el sentido a los punteros del reloj.
- Cuando se esté usando el disco de prueba, la posición quedará fijada para discos de 30 cm.

Disco de prueba	Posición de ajuste
PLS2001 PLS4001	310 ± 3 cuentas 13 ± 6 cuentas

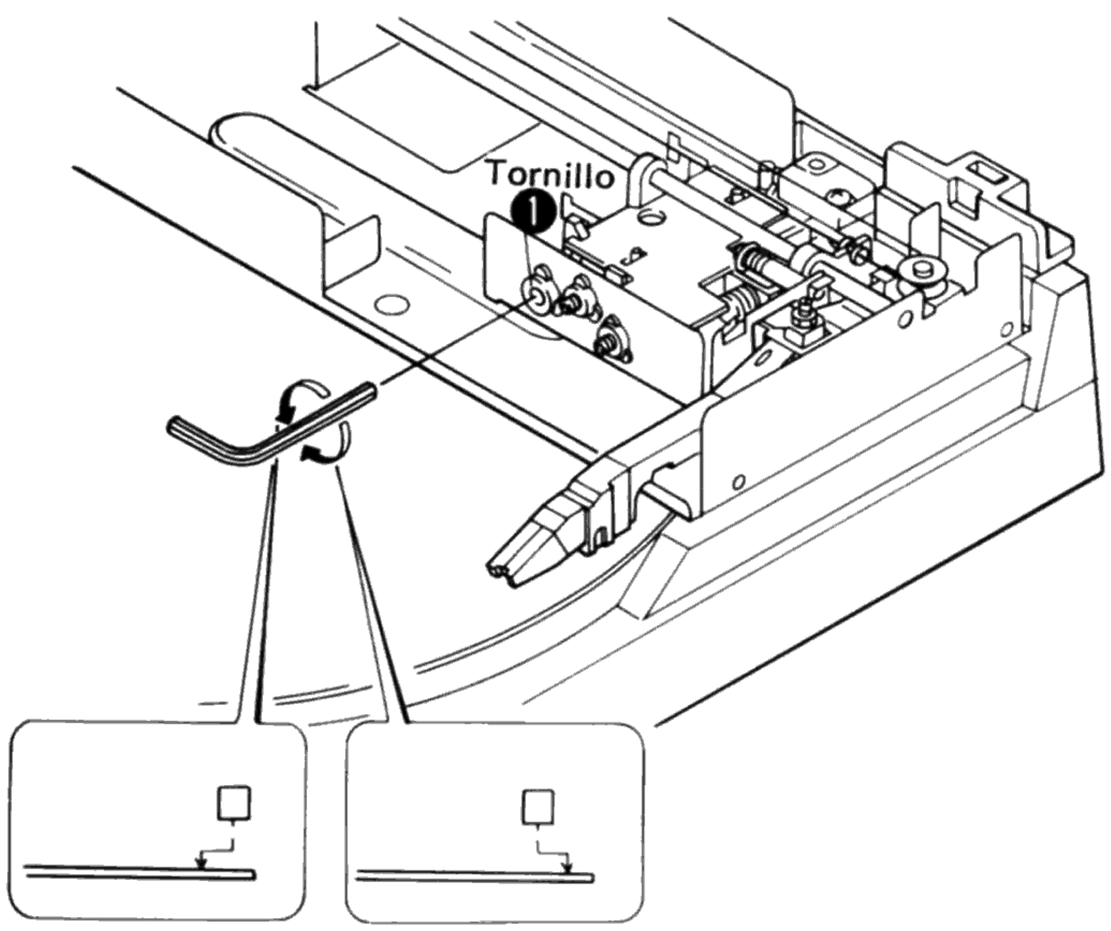

Fig. 13-1 Ajuste del brazo fonocaptor

13.2 AJUSTE DE GANANCIA DEL SENSOR DE SEGUIMIENTO Y DE DESCENTRADO

- **Ajuste de Ganancia**

1. Sacar la cubierta para el polvo y la cubierta del panel.
2. Conectar un voltímetro de C.C. al pasador No. 1 (GND) y al pasador No. 2 (TRKG) del CN4.
3. Girar el tornillo ❷ en el sentido contrario a los punteros del reloj y tirar la unidad de carro hacia adelante.
4. Encender el aparato y mientras se empuja el brazo de fonocaptor hacia el centro (como se muestra en la ilustración) ajustar el VR201 (TRKG) hasta que el voltímetro de C.C. registre 3V ± 0,1V.

- **Ajuste de Descentrado**

5. Haga volver el brazo de fonocaptor a la posición de descanso. (Volverá por sí mismo cuando usted lo libere.)
6. Para ajustarlo, girar el tornillo ❷ en el sentido de los punteros del reloj hasta que el voltímetro de C.C. registre 1V ± 0,1V.

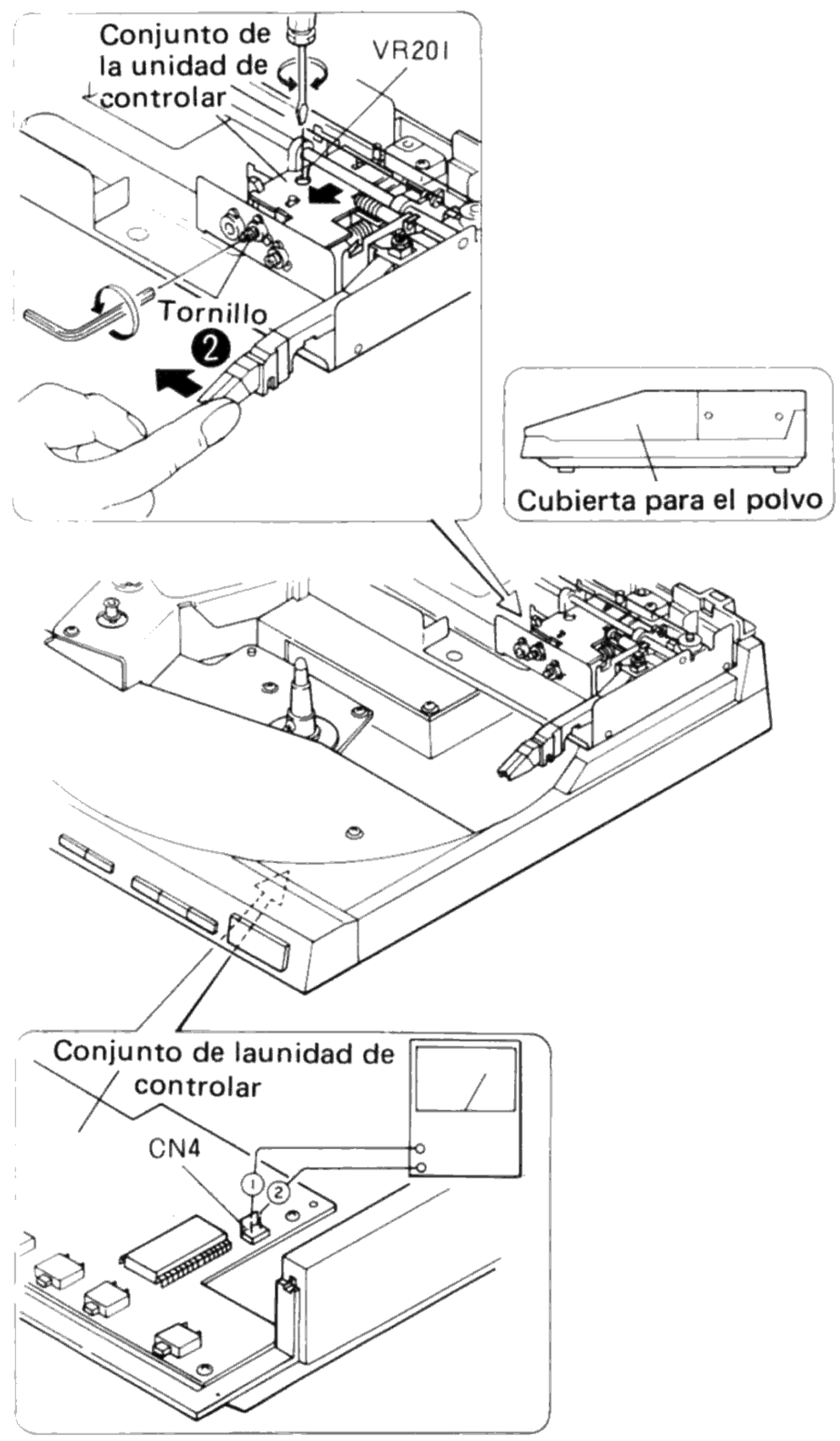

Fig. 13-2 Ganacia del sensor de seguimiento y ajuste de descentrado

www.hifiengine.com

13.3 AJUSTE DE LA ALTURA DEL BRAZO DE FONOCAPTOR

1. Con la cubierta para el polvo desmontada, insertar dos chavetas de 6mm (una derecha y una a la izquierda) para emular la situación en que la cubierta para el polvo y la base del mecanismo están conectadas.
2. Poner un disco de 30 cm sobre el plato giratorio, encender el aparato, y usando el conmutador de localización (◄◄) mover el brazo de fonocaptor a una distancia de aproximadamente 100 mm del centro del plato giratorio.
3. Girar el tornillo ❸ hasta que la punta de la aguja esté de 5 a 7 mm sobre la superficie del disco.
   - Girando el tornillo en el sentido de los punteros del reloj, se baja la aguja.
   - Girando el tornillo en el sentido contrario a los punteros del reloj, se sube la aguja.

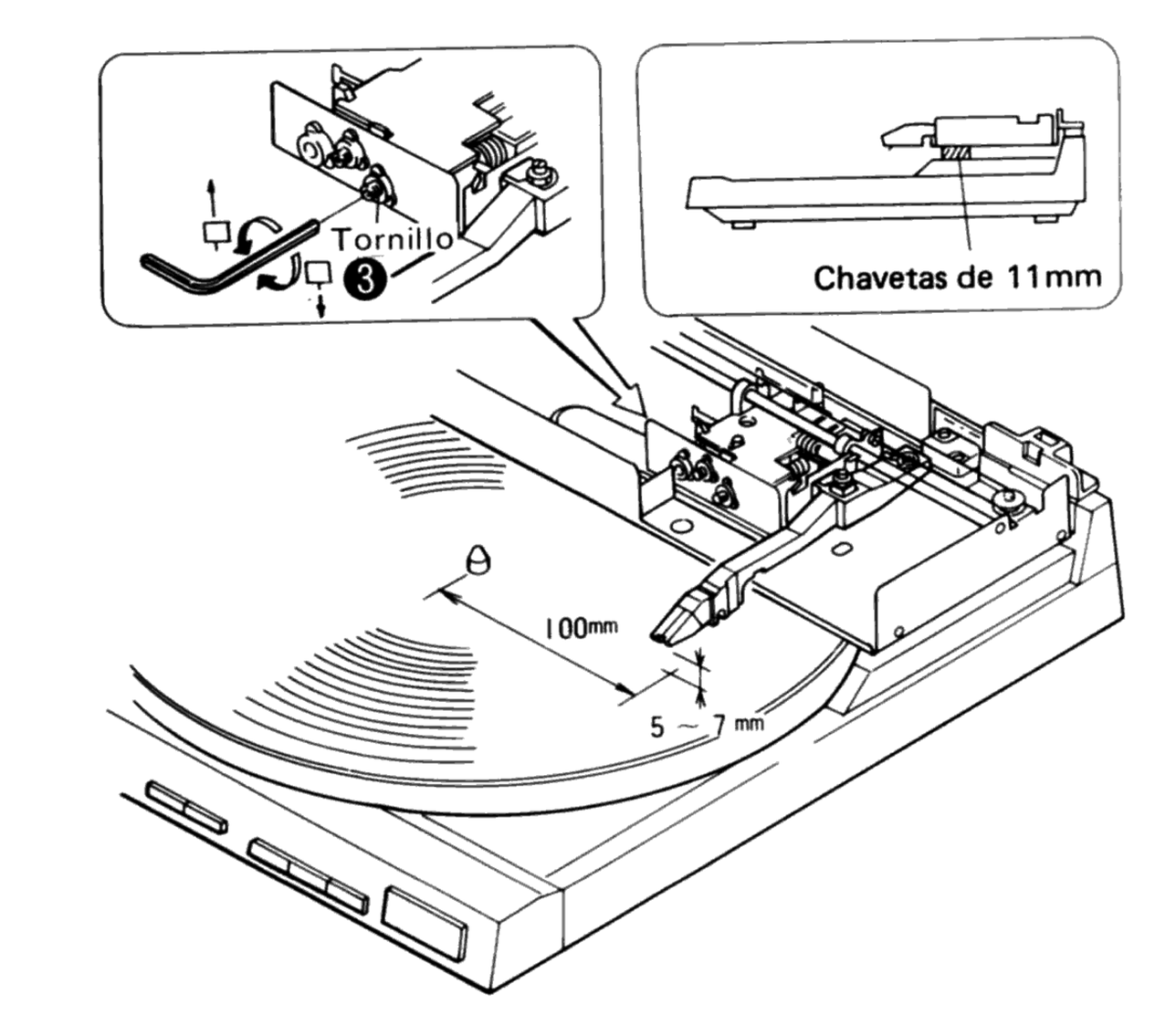

Fig. 13-3 Ajuste de la altura del brazo de fonocaptor

13.4 AJUSTE DELA VELOCIDAD DEL MOTOR DEL TOCADISCOS

1. Colocar la hoja de estroboscopia sobre el platillo. Encender el conmutador de alimentación y el conmutador de colocación (◄◄) para girar el motor del tocadiscos.
2. Insertar un destornillador pequeño en el orificio de ajuste de velocidad situado el en panel inferior, y ajustar respectivamente VR1 y VR2.

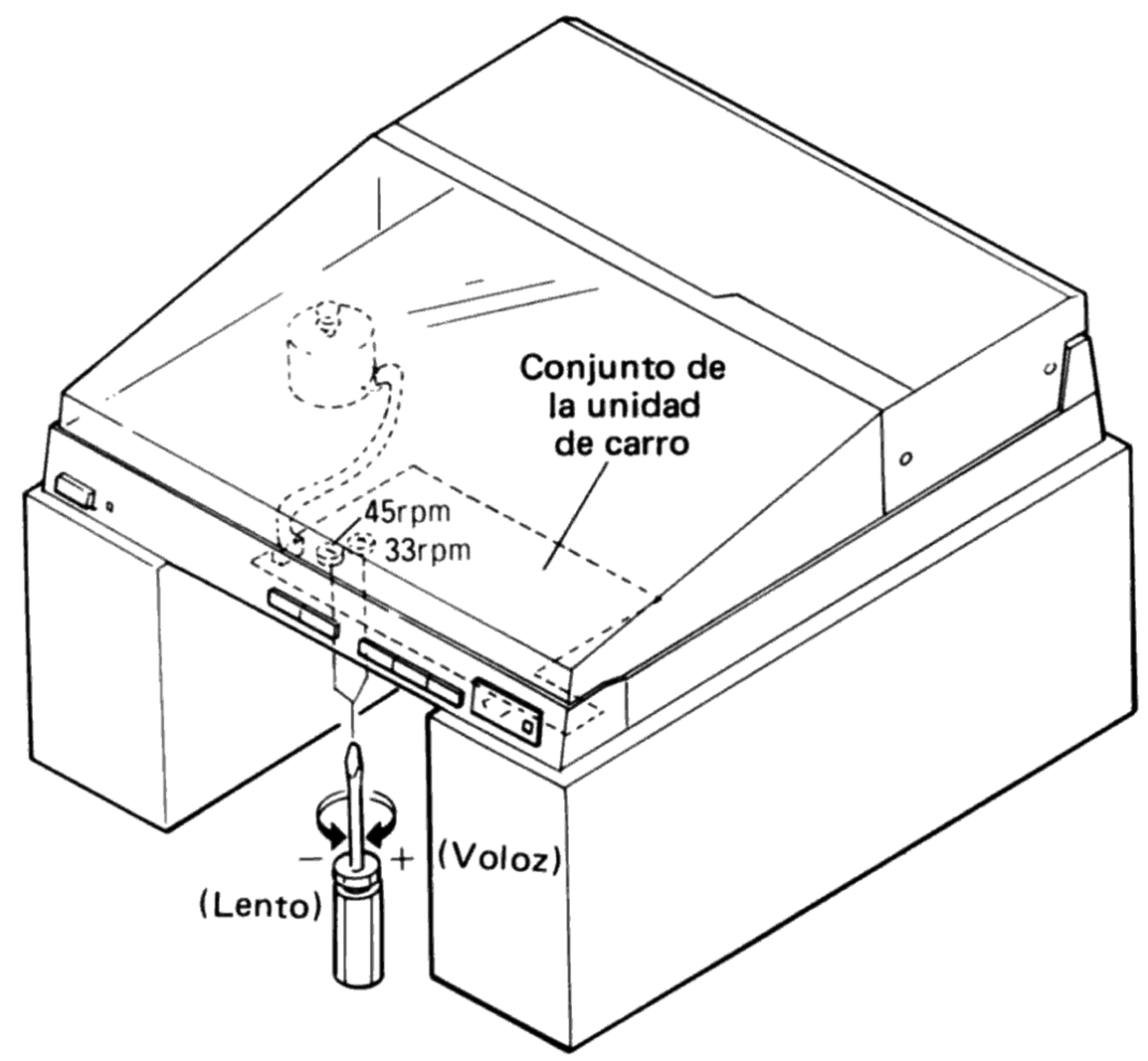

Fig. 13-4 Ajuste de la velocidad del motor del tocadiscos

www.hifiengine.com

14. PACKING

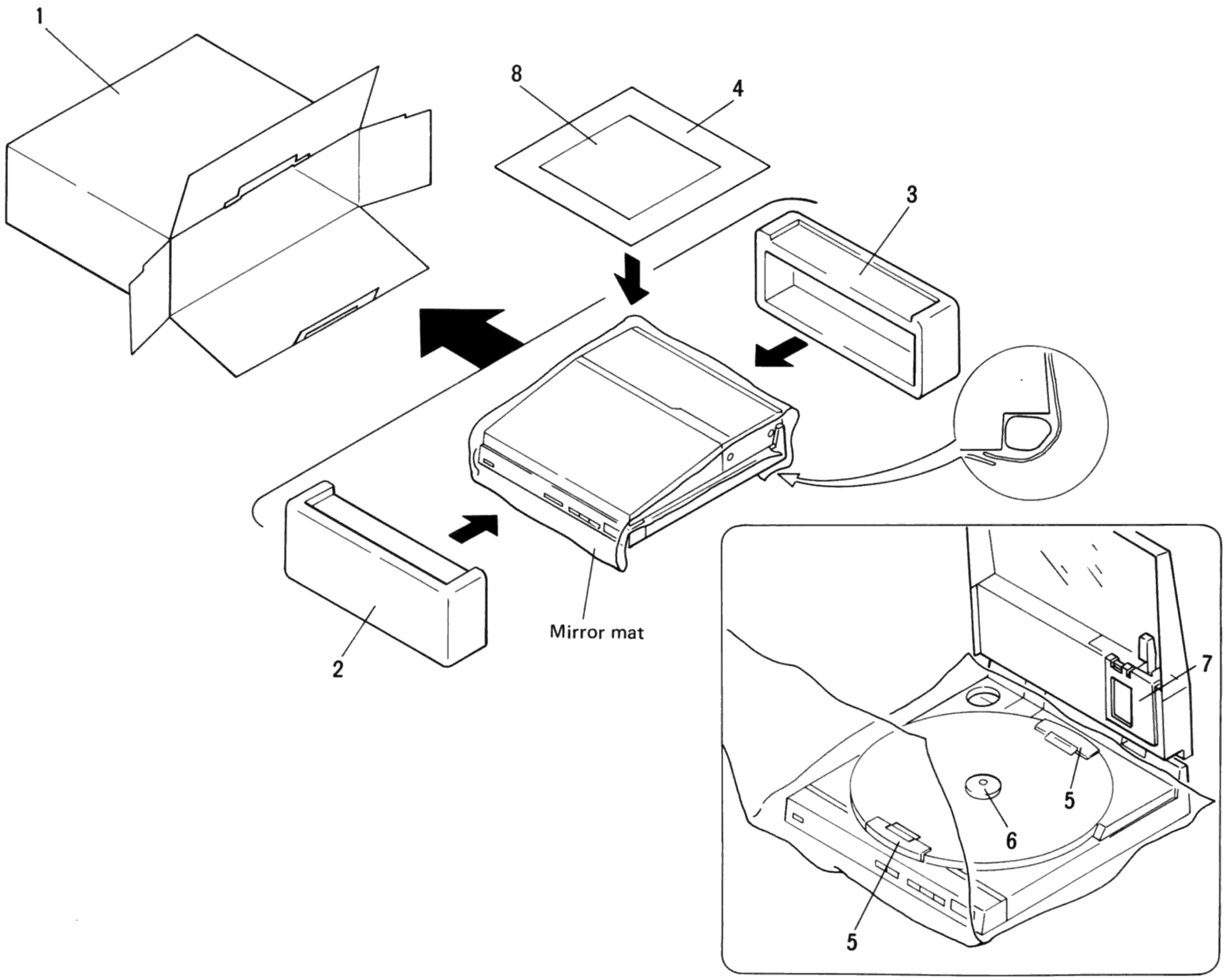

Parts List of Packing

Mark	No.	Part No.	Description
	1.	PHH-200	Packing case
	2.	PHA-188	Protector (F)
	3.	PHA-189	Protector (R)
	4.	PEA-073	Rubber mat assembly
	5.	PHC-101	Pad
	6.	N93-603	45 adaptor
	7.	PNY-194	Carriage clamper
	8.	PRC-018	Operating instructions (Spanish)
		PRB-277	Operating instructions (English)

www.hifiengine.com

15. SUPPLEMENT FOR WEM,WB AND KUT TYPES

The PL-X100/WEM, PL-X100/WB and PL-X100/KUT are the same as the PL-X100/R with the exception of the following sections.

CONTRAST OF MISCELL ANEOUS PARTS

Mark	Symbol & Description	Part No.				Remark
		PL-X100/R	PL-X100/WEM	PL-X100/WB	PL-X100/KUT	
	Cord cover	PNY-311	PNY-257	PNY-257	PNY-257	
⚠ ★	Power transformer assembly	PTX-062	PTX-061	PTX-061	PTX-060	
⚠	Power cord assembly	PDF-220	PDF-224	PDF-237	PDF-221	
★★	Line voltage selector	PSB-017	.....	.....	.....	
	Operating instructions (English/French/German/Italian)	.....	PRE-035	.....	.....	
	Operating instructions (English)	PRB-277	.....	PRB-277	PRB-277	
	Operating instructions (Spanish)	PRC-018	.....	.....	.....	
	Packing case	PHH-200	PHH-200	PHH-200	PHH-199	
	Cartridge assembly	Non supply	Non supply	Non supply	.....	

SCHEMATIC DIAGRAM (POWER SUPPLY CIRCUIT)

WEM, WB TYPES

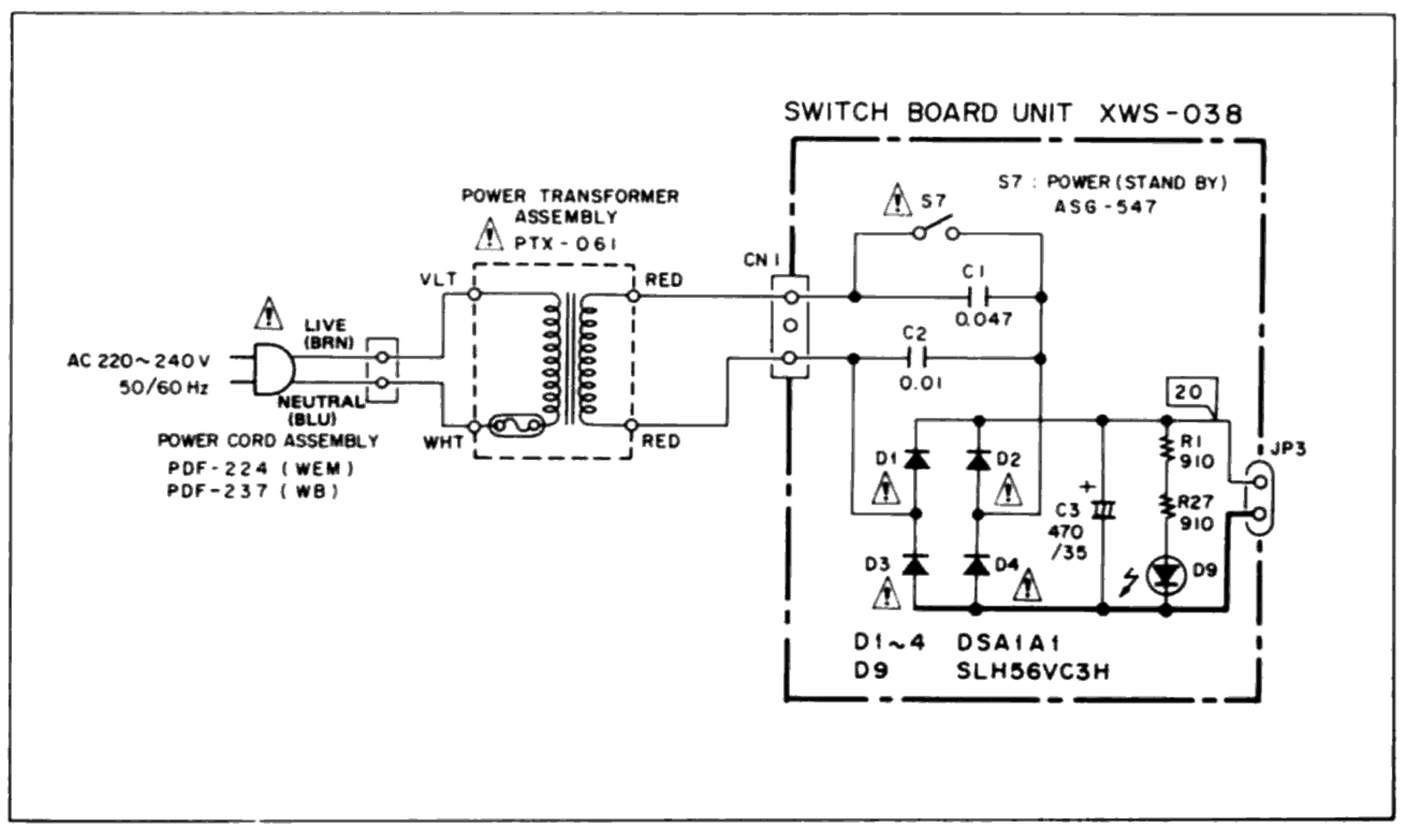

KUT TYPE

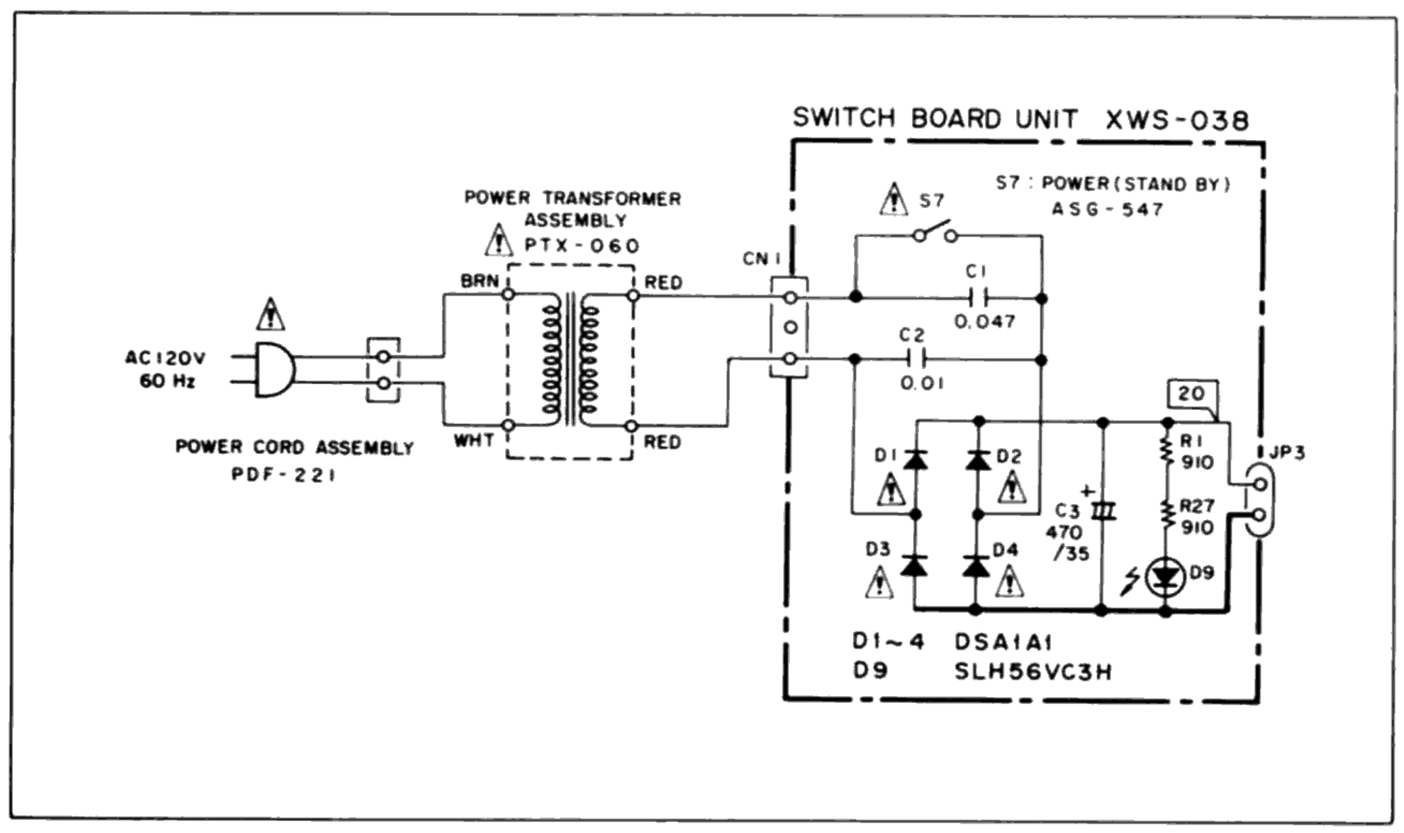

www.hifiengine.com