# ZEPHYR RADIO CO.

MODELS 20X7, 21X7, 22X7
MODEL 25Y11

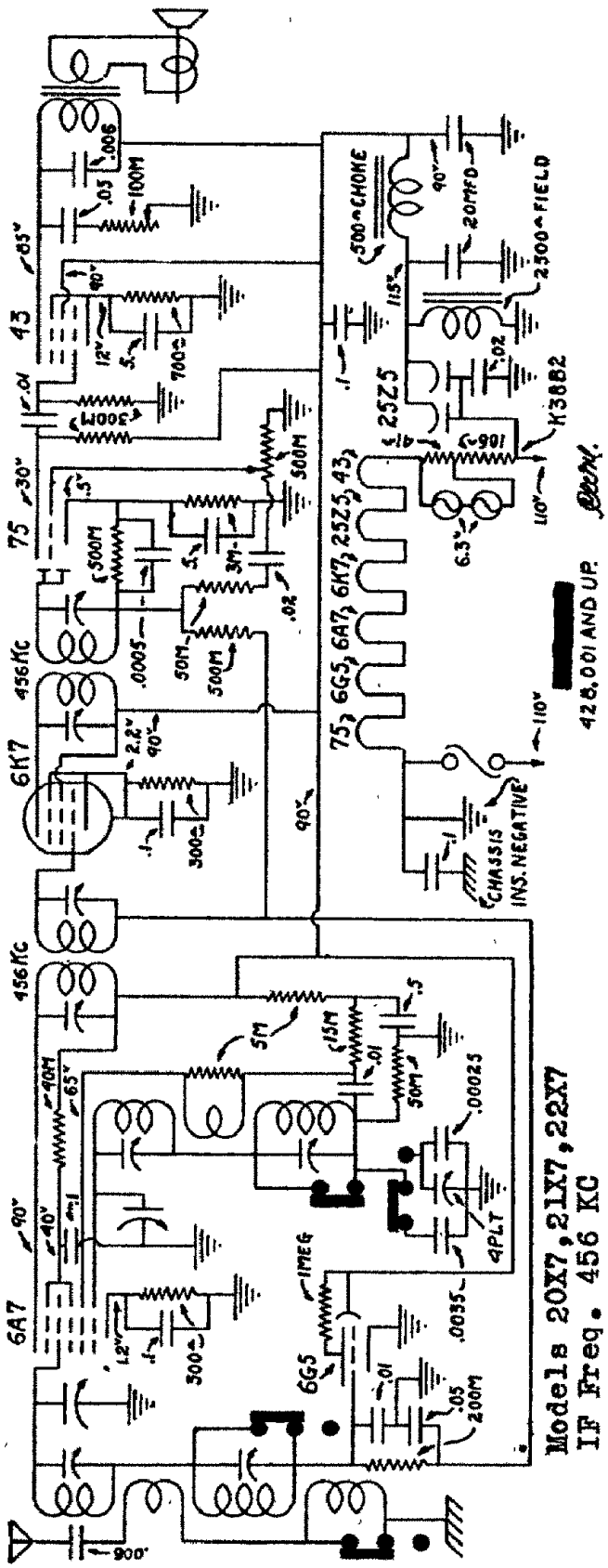


Models 20X7, 21X7, 22X7
IF Freq. 456 KC

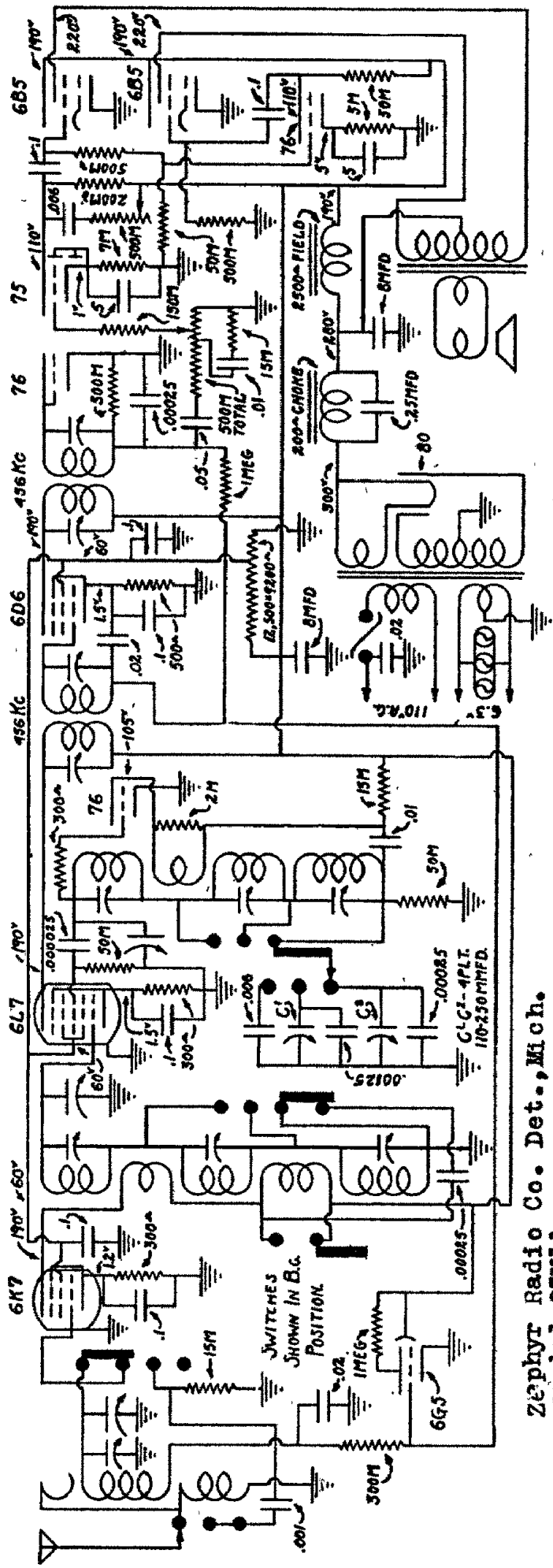


Zephyr Radio Co. Det., Mich.
Model 25Y11
IF Frequency 456 KC