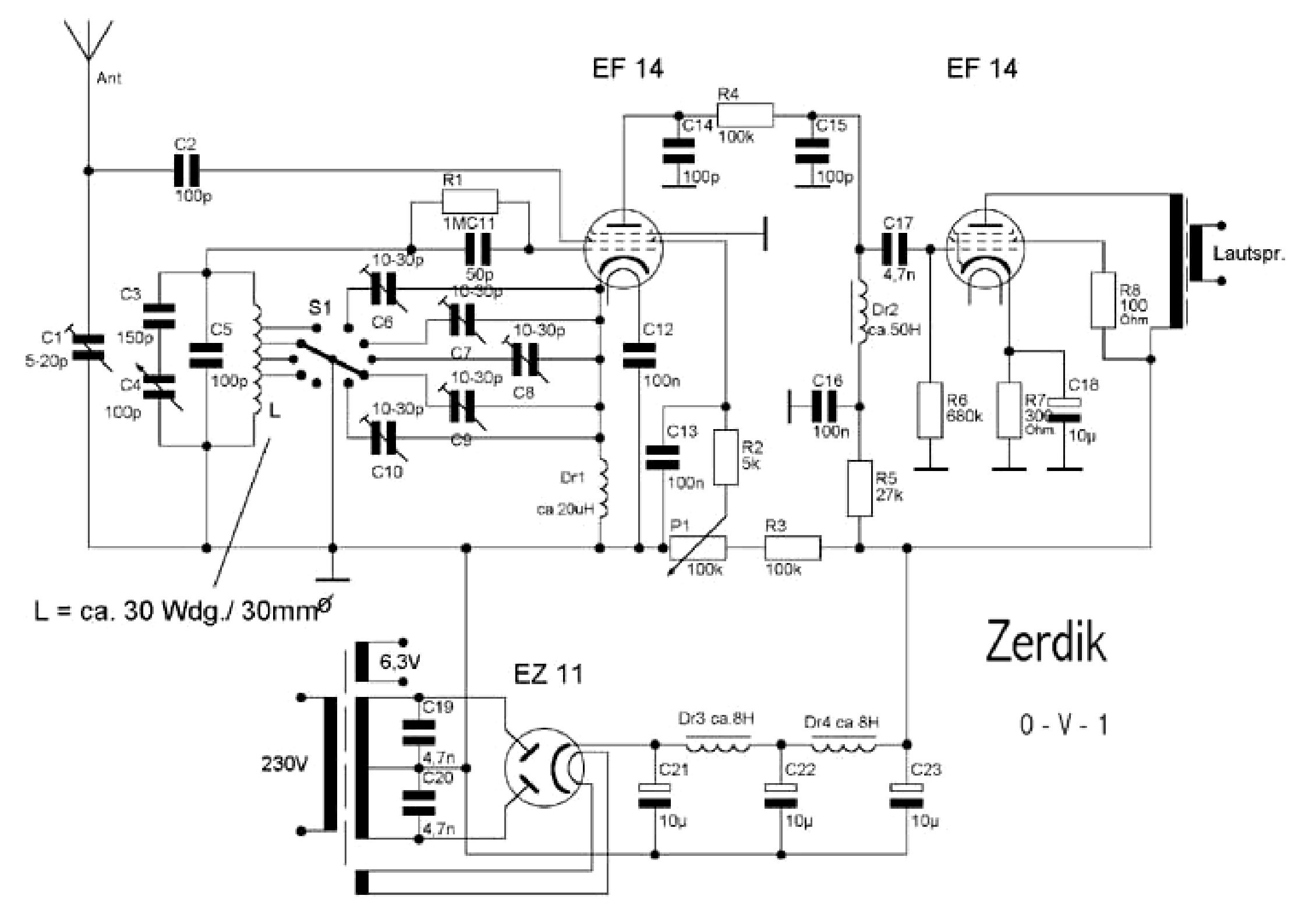
Ant
EF 14
EF 14
R4
100k
C14
100p
C15
100p
C2
100p
R1
1MC11
50p
C17
4,7n
Lautspr.
10-30p
10-30p
C3
150p
S1
C6
C7
10-30p
C12
100n
Dr2
ca.50H
R8
100
Ohm
C1
5-20p
C5
100p
C8
10-30p
C4
100p
L
10-30p
C9
C16
100n
R6
680k
R7
300
Ohm
C18
10µ
10-30p
C10
C13
100n
R2
5k
Dr1
ca 20uH
R5
27k
P1
100k
R3
100k
L = ca. 30 Wdg./ 30mmØ
Zerdik
6,3V
EZ 11
C19
4,7n
C20
4,7n
230V
Dr3 ca.8H
Dr4 ca 8H
C21
10µ
C22
10µ
C23
10µ
0 - V - 1