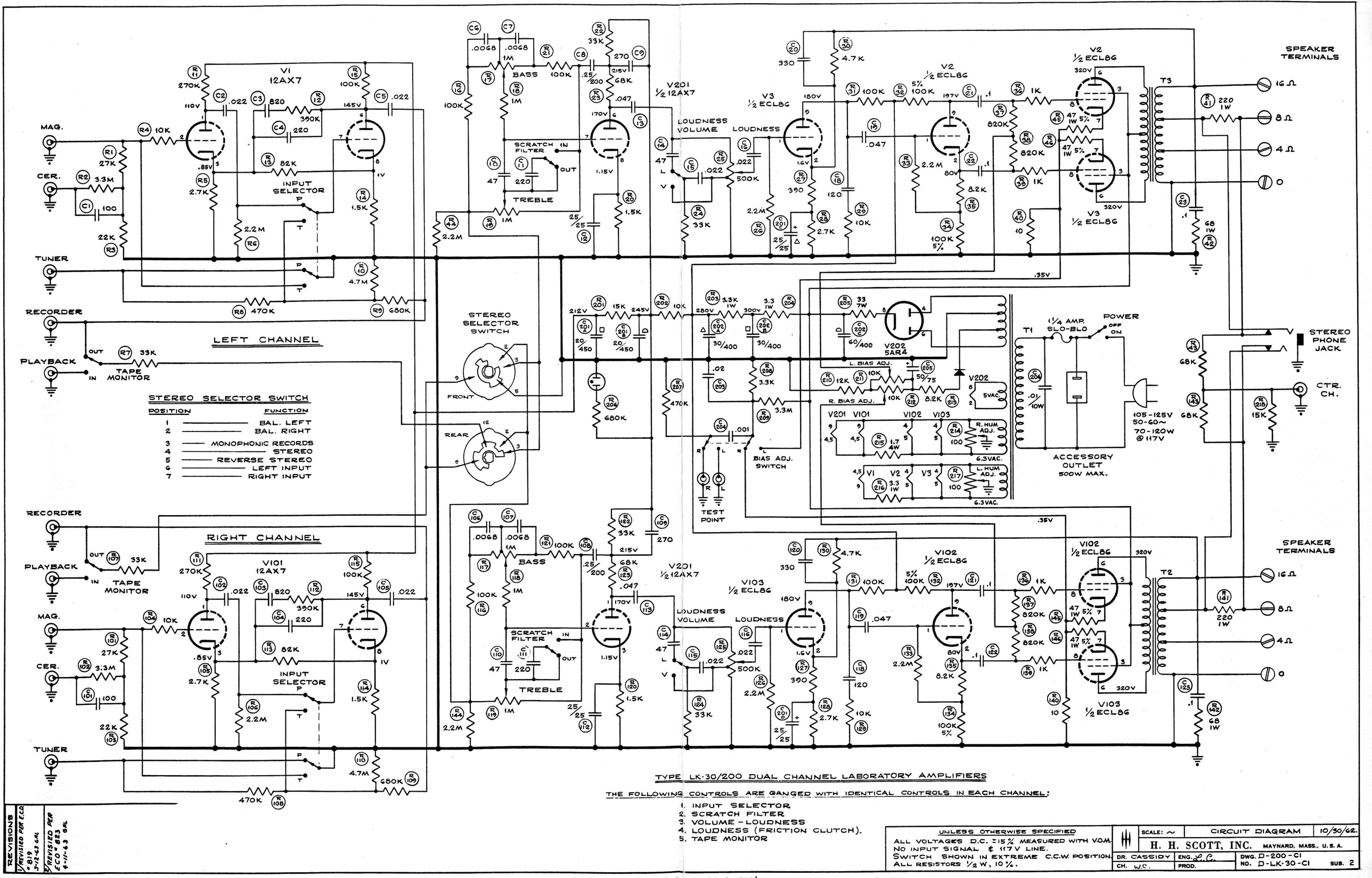

STEREO SELECTOR SWITCH

POSITION	FUNCTION
1	BAL. LEFT
2	BAL. RIGHT
3	MONOPHONIC RECORDS
4	STEREO
5	REVERSE STEREO
6	LEFT INPUT
7	RIGHT INPUT

TYPE LK-30/200 DUAL CHANNEL LABORATORY AMPLIFIERS

THE FOLLOWING CONTROLS ARE GANGED WITH IDENTICAL CONTROLS IN EACH CHANNEL:

1. INPUT SELECTOR
2. SCRATCH FILTER
3. VOLUME - LOUDNESS
4. LOUDNESS (FRICTION CLUTCH).
5. TAPE MONITOR

UNLESS OTHERWISE SPECIFIED
ALL VOLTAGES D.C. ±15% MEASURED WITH V.O.M.
NO INPUT SIGNAL & 117V LINE.
SWITCH SHOWN IN EXTREME C.C.W. POSITION.
ALL RESISTORS ½ W, 10%.

SCALE: ~ | CIRCUIT DIAGRAM | 10/30/62.

H. H. SCOTT, INC. MAYNARD, MASS., U.S.A.

DR. CASSIDY | ENG. J.C. | DWG. D-200-C1
CH. W.C. | PROD. | NO. D-LK-30-C1 | SUB. 2

REVISIONS
1/ REVISED PER E.C.O. #819 3-12-62 G.N.
2/ REVISED PER E.C.O. #823 4-11-63 G.N.

HIGHEST R & C NUMBERS (R46, R146, C23, C123, R218, & C206). OUT C17, C117