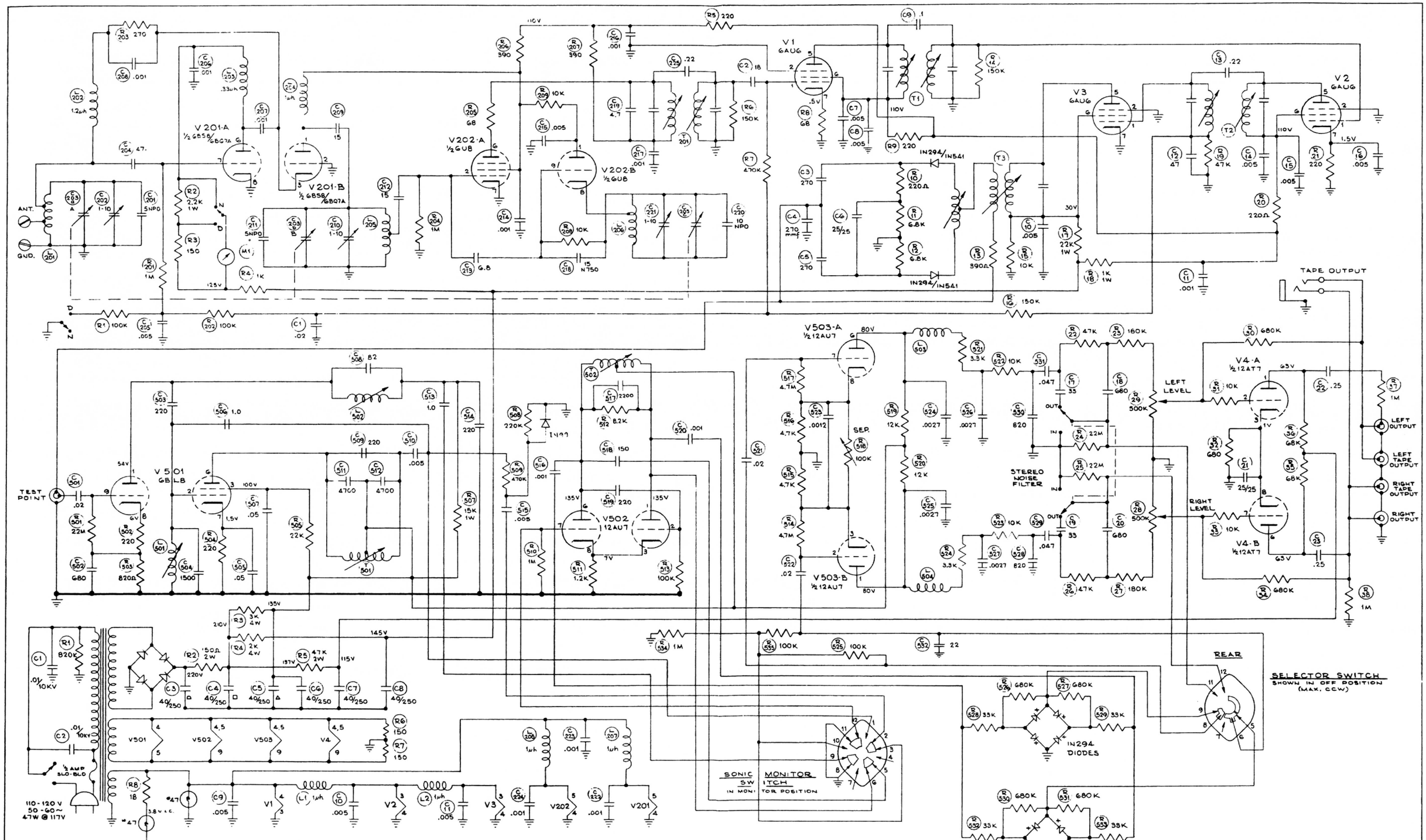

R8, C11 ; R209, C225 ; R535, C532 ; R38, C23 R506 OUT

VOLTAGES MEASURED WITH 117V LINE, SELECTOR SWITCH IN STEREO POSITION USING VOM. (OFF STATION) 300Ω LOAD ON ANT. TERMINALS

REVISIONS
ECO 695 5/7/62 DR. 17

SCALE: ~	350B CIRCUIT DIAGRAM		4/2/62
H. H. SCOTT, INC. MAYNARD, MASS., U.S.A.			
DR. D.R.	ENG.	DWG. NO. D-350B-C1	SUB. 1
CH.	PROD.		