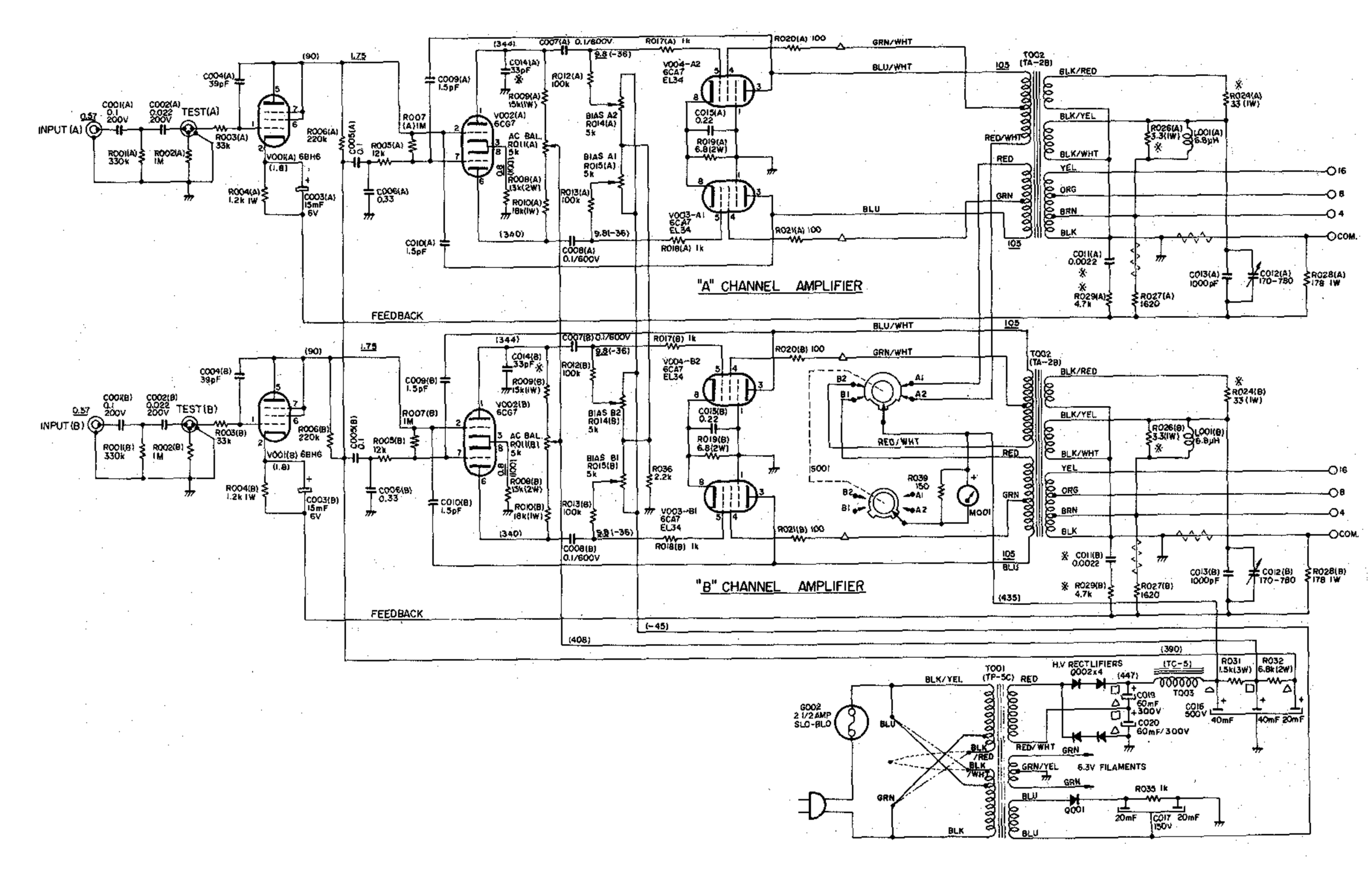
INPUT (A)
INPUT (B)
TEST (A)
TEST (B)
"A" CHANNEL AMPLIFIER
"B" CHANNEL AMPLIFIER
FEEDBACK
V001(A) 6BH6
V001(B) 6BH6
V002(A) 6CG7
V002(B) 6CG7
V004-A2 6CA7 EL34
V003-A1 6CA7 EL34
V004-B2 6CA7 EL34
V003-B1 6CA7 EL34
AC BAL. R011(A) 5k
AC BAL. R011(B) 5k
BIAS A2 R014(A) 5k
BIAS A1 R015(A) 5k
BIAS B2 R014(B) 5k
BIAS B1 R015(B) 5k
T002 (TA-2B)
T001 (TP-5C)
T003 (TC-5)
G002 2 1/2 AMP SLO-BLO
H.V RECTIFIERS Q002x4
Q001
M001
6.3V FILAMENTS
16
8
4
COM.