LIAISON Z1◄——►Z3
Base de Temps

J6

1	Cde Synchro B1 =
2	Masse
3	"VOLT" S1 B2 non libre
4	X10
5	Signal synchro Ext
6	Masse
7	Signal Synchro B1
8	Cde Mode B1
9	Cde B1+B2
10	Cde B2 Libre

J7

1	Cde Synchro B1
2	Cde Synchro B1
3	Cde Mixé
4	Signal Synchro B2
5	Cde Mode B2
6	Cde Mode XY
7	Clignotement Mono
8	Cde Mono et Réarm
9	Cde Auto - DECL
10	

J8

1	Cde Allumage
2	créneau B1
3	Signal Alt.
4	Cde Alt.
5	inhib. balayage
6	+ 15 V
7	Masse
8	Signal XY
9	Bascule Auto
10	-200 V

J9

1	+5 V
2	-5 V
3	+120 V
4	-5 V
5	Cde Réticule

LIAISON Z1◄——►Z6
Clavier panneau avant

M	S6 M1	MEMOIRE
O	S8 M2	
N	S7 RAPPEL	
F	S11	MODE X
K	S12	
16	CR21 X10	
L	S13	
29	CR22 XY	
31	CR24 B1+B2	
32	CR25 B2	
33	CR26 MIXE	
30	CR23 B1	
I	S14	SYNCHRO B2
13	CR32 LIBRE	
J	S15	
14	CR33 SYN	
24	CR27 COMP	
26	CR29 B	
27	CR30 C	
28	CR31 EXT	
25	CR28 A	
C	S9	SYNCHRO B1
P	S10 REARM	
6	AUTO	
D	S5	
7	CR18 DECL	
10	CR14 ∿	
11	CR15 ⎍	
12	CR16 ⩚	
9	CR13 =	
8	CR19 MONO	
G	S3	
H	S4	
17	CR6 COMP	
18	CR7 A	
19	CR8 B	
21	CR12 EXT	
23		
22	CR11 SECT	
20	CR9 C	
B	S2	MODE Y
A	S17 BP20MHz	
15	CR20 BP20MHz	
1	CR1 ALT	
2	CR2 COM	
5	CR5 A,A+B,B,C	
4	CR4 A+B,C	
3	CR3 A,B,C	

LIAISON Z1◄——►Z9
Mémoire

J12

1	PV
2	Sign. Autostock
3	Mode R+L
4	Mode Rapide
5	Mode Visu
6	Mode Conv.
7	Mode Enreg.
8	Impulsion transfert
9	Créneaux pers. var.
10	
11	
12	
13	
14	Mode Autostock
15	Retour impulsion S3
16	Cde Eff. manuel

J13

1	Entrée Cde G'7 (+)
2	Entrée Cde G'7 (-)
3	Entrée Cde G'6 (+)
4	Entrée Cde G'6 (-)
5	Cde K'2 (régl. rapide)
6	Créneau balayage
7	Réarm. mono
8	Entrée Cde G'3
9	
10	Retour impulsions S1-S2
11	Verrouillage
12	Entrée Cde G'2
13	Masse
14	Masse
15	+ 15 V
16	- 5 V

J15

1	
2	
3	
4	
5	Mode Conv.
6	Verrouillage S1-S2
7	Cde vit. enreg.
8	Verrouillage S3
9	Impulsions S1-S2
10	Impulsions S3

LIAISON Z1◄——►Z10
Panneau avant Mémoire

J14

1	Voyant Lent
2	Voyant Autostock
3	S1
4	Voyant Rapide
5	Voyant VISU
6	
7	Voyant Enreg.
8	Voyant R+L
9	S2
10	S4
11	S3
12	
13	Voyant Conv.

LIAISON Z1◄——►Z2

J10

1	+15 V
2	-5 V
3	Cde BP20MHz
4	Masse
5	+65 V

J11

1	Somme A+B	
2	A	Inter. Y
3	B	
4	C	
5	A	Commut. Y
6	B	
7	C	

LIAISON Z1◄——►Z2

J20

1	+120 V
2	+15 V
3	-5 V
4	-200 V

LIAISON Z9◄——►Z12

J21

1	Entrée Cde G'5
2	
3	
4	

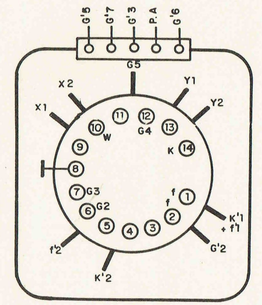

TUBE CATHODIQUE

CANON D'INSCRIPTION

f	: Filament
K	: Cathode
W	: Wehnelt
G2	: Accélération
G3	: Concentration
G4	: Astigmatisme
G5	: Géométrie
P.A.	: Post-accélération
X1-X2	: Déviation horizontale
Y1-Y2	: Déviation verticale

CANON D'ARROSAGE

f'1 - f'2	: Filaments
K'1 - K'2	: Cathodes
G'2	: Accélération
G'3	: Collimation
G'5	: Collecteur
G'6	: Cible rapide
G'7	: Cible lente

ENERTEC
Schlumberger

5277

15.1.84

INTERCONNEXION

Fig 1

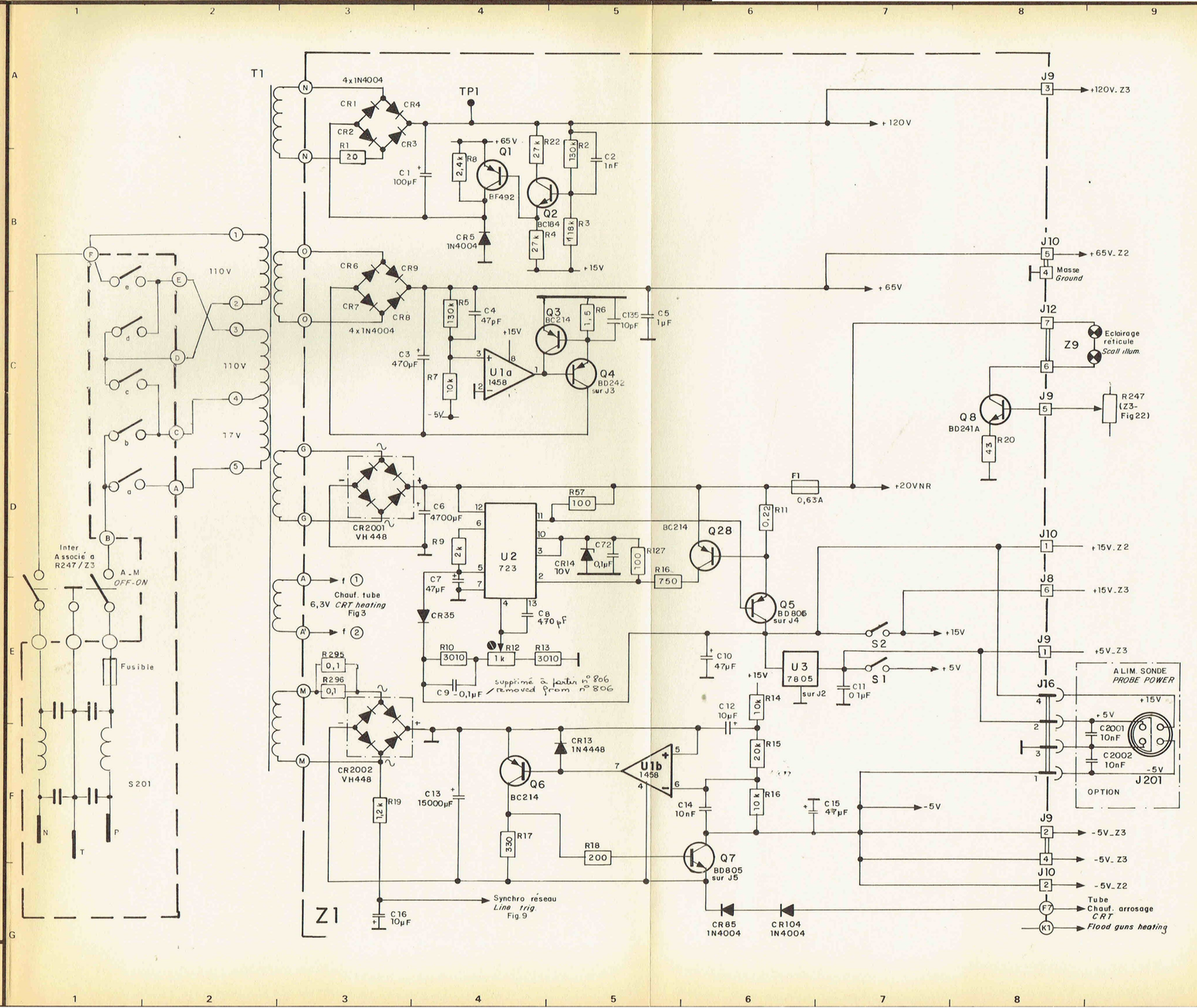

ENERTEC
Schlumberger

5277

Müller
27-3-85

LOW VOLTAGE POWER SUPPLY

ALIMENTATION BASSE TENSION -

Fig 2

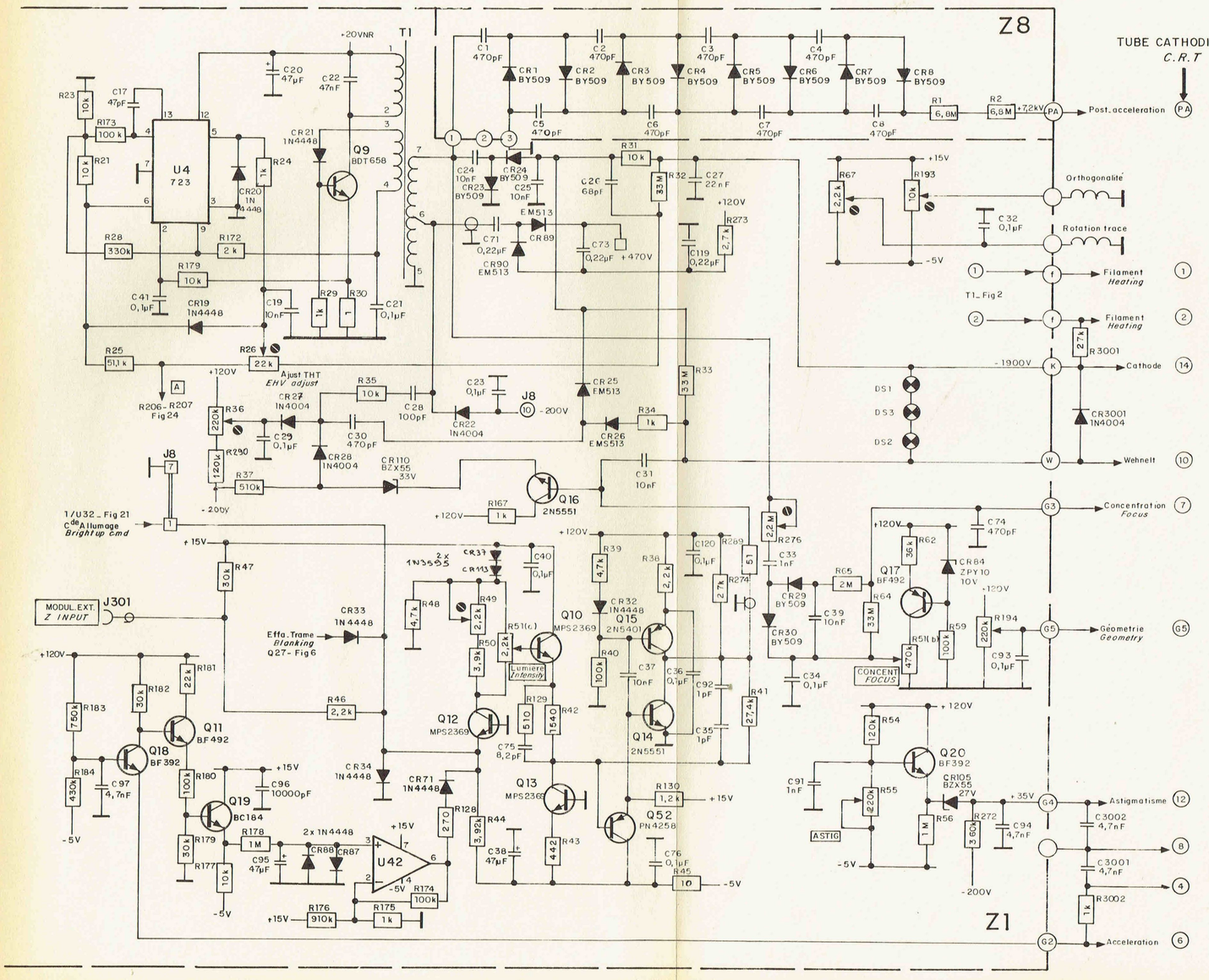

ENERTEC
Schlumberger

5277

Muller
3-12-85

EHV BRIGHT UP

HAUTE TENSION-ALLUMAGE

Fig 3

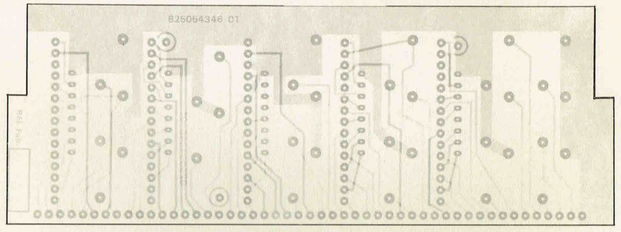

CIRCUIT Z6

MODE Y _ *Y MODE*

ALT | COM *CHOP*

ABC | A+B C | A A+B B C

SYNCHRO B1 *B1 TRIGGER*

COMP | A | B | C

SECT *LINE* | EXT

MEMOIRE *STORAGE*

M1 | RAPPEL *RCL* | M2

B.P. 20MHz *BW 20MHz*

AUTO | DECL *NORM* | MONO *SINGL.* | REARM *RESET*

MODE X _ *X MODE*

X10 | XY | B1 | B1+B2 | B2 | MIXE

SYNCHRO B2 *B2 TRIGGER*

COMP. | A | B | C | EXT

LIBRE *STARTS* | SYNC *TRIG*

Z 6

(PANNEAU AVANT)

(FRONT PANEL)

KEY BOARD

CLAVIER DE COMMANDE

Fig 4

ENERTEC Schlumberger

5277

Muller 18-1-84

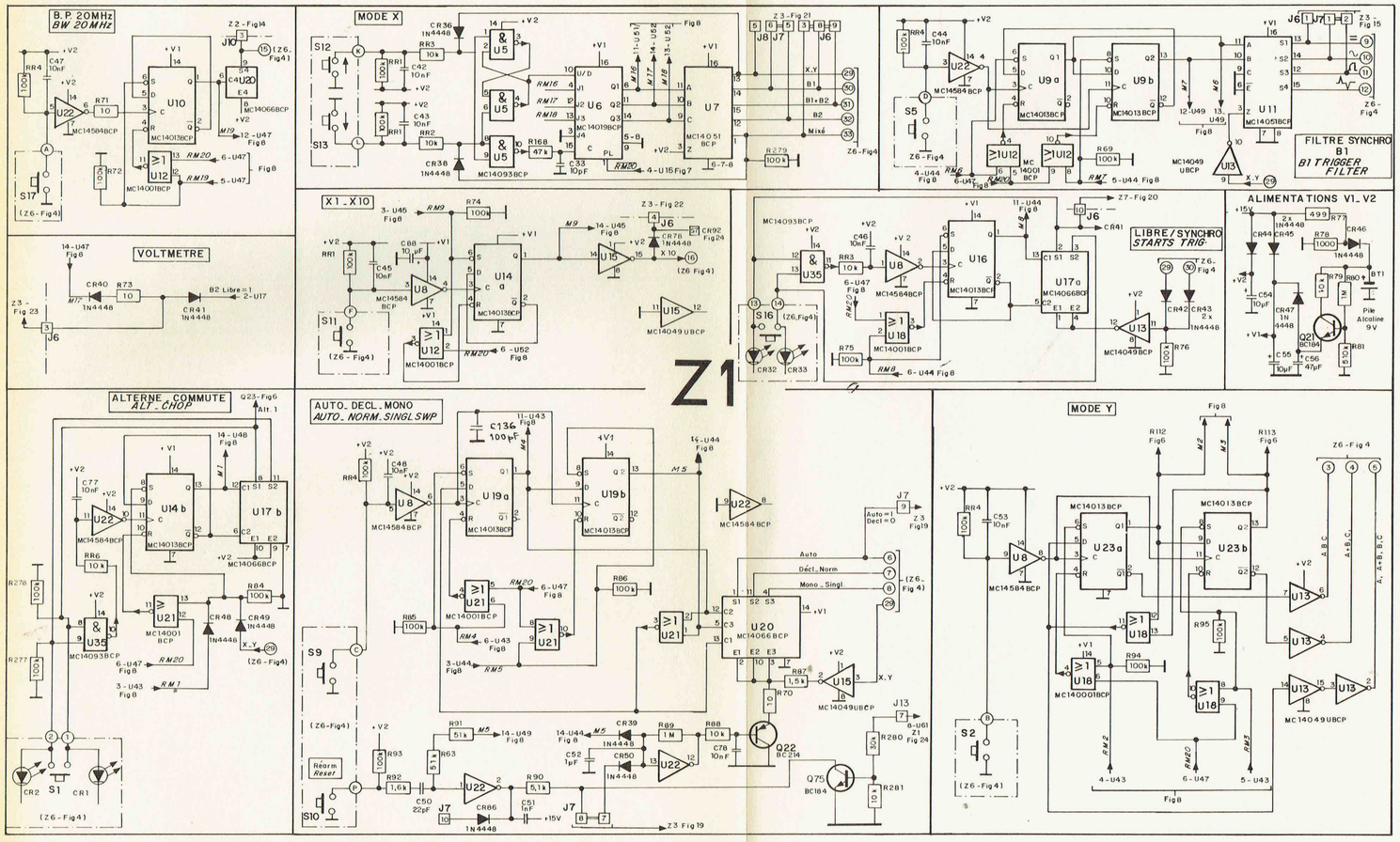

ENERTEC
Schlumberger

5277

3-12-85

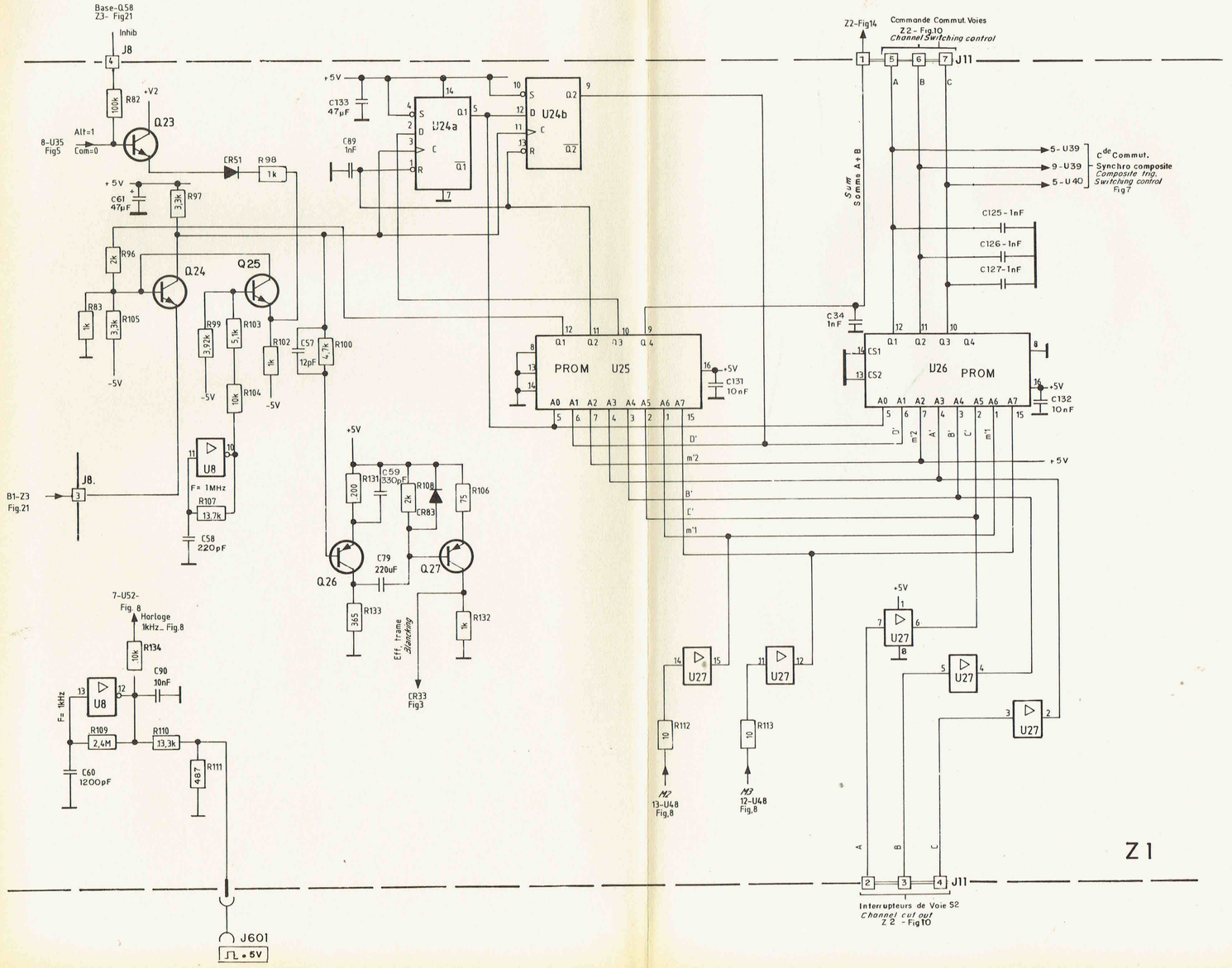

Y LOGIC

LOGIQUE Y

Fig.6

ENERTEC
Schlumberger

5277

Muller
22-12-83

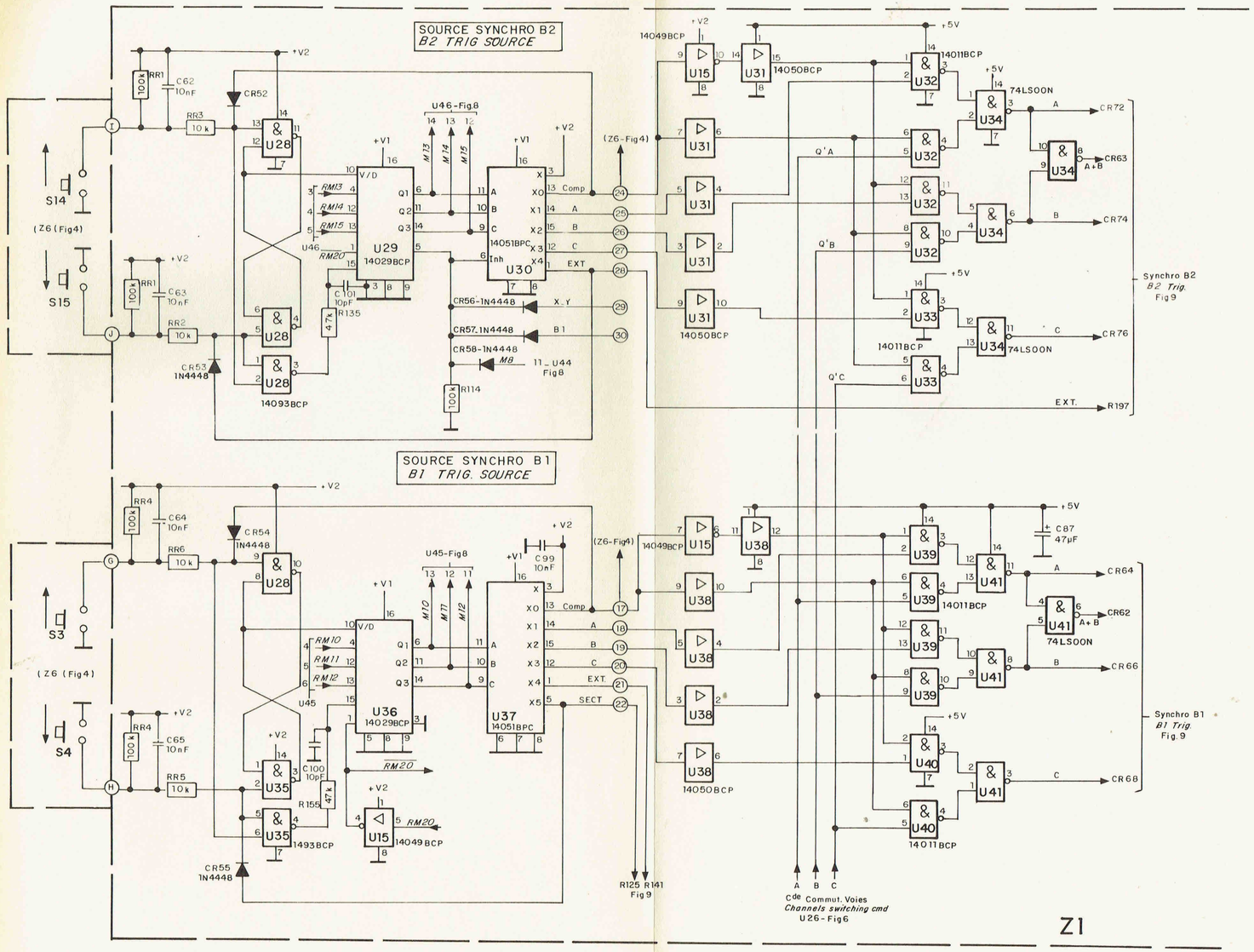

TRIG. LOGIC

LOGIQUE SYNCHRO

Fig 7

ENERTEC
Schlumberger

5277

Muller
22-12-83

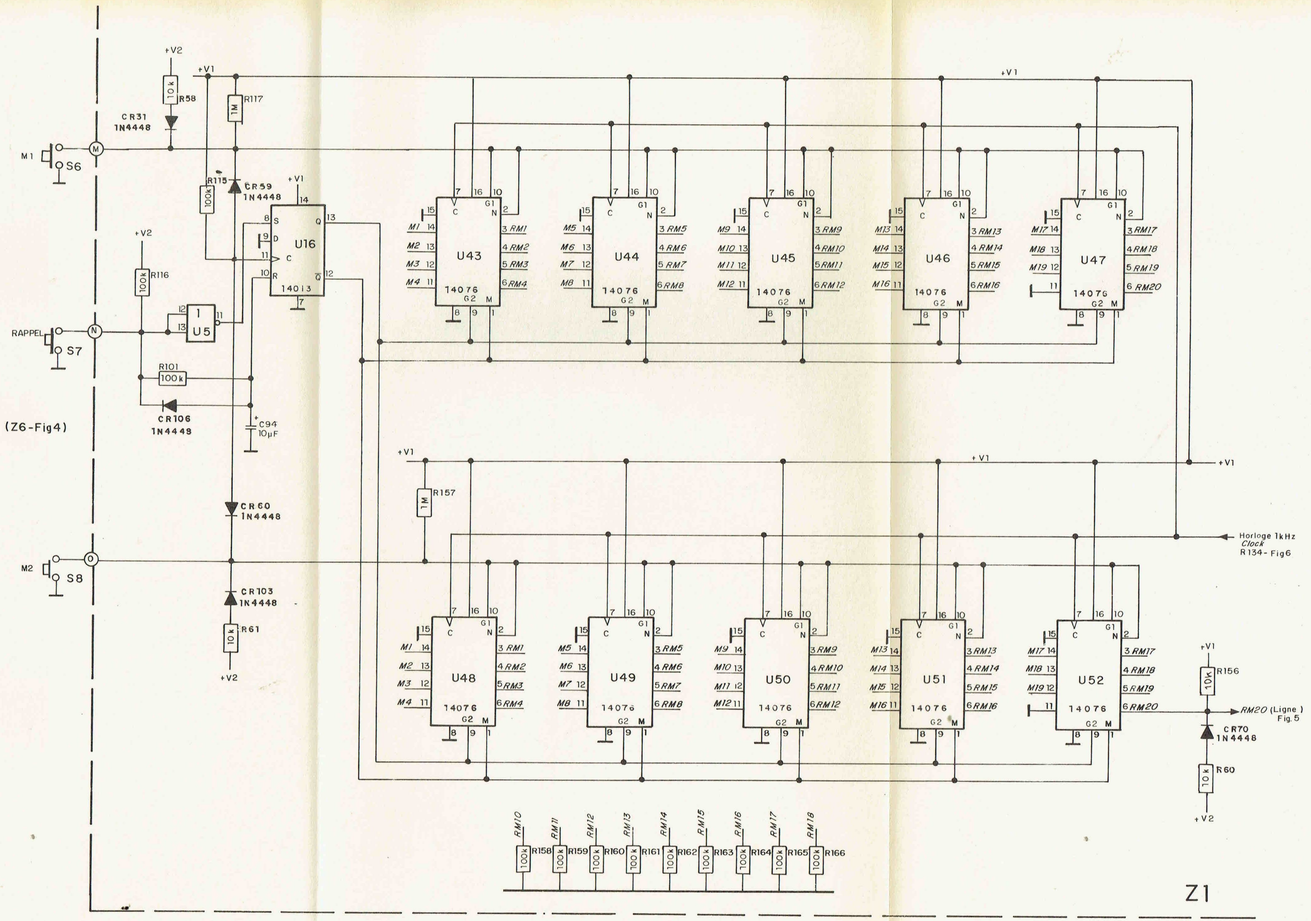

KEY BOARD
MEMORY

MEMORISATION DES COMMANDES

Fig 8

ENERTEC
Schlumberger

5277

Muller
27-9-85

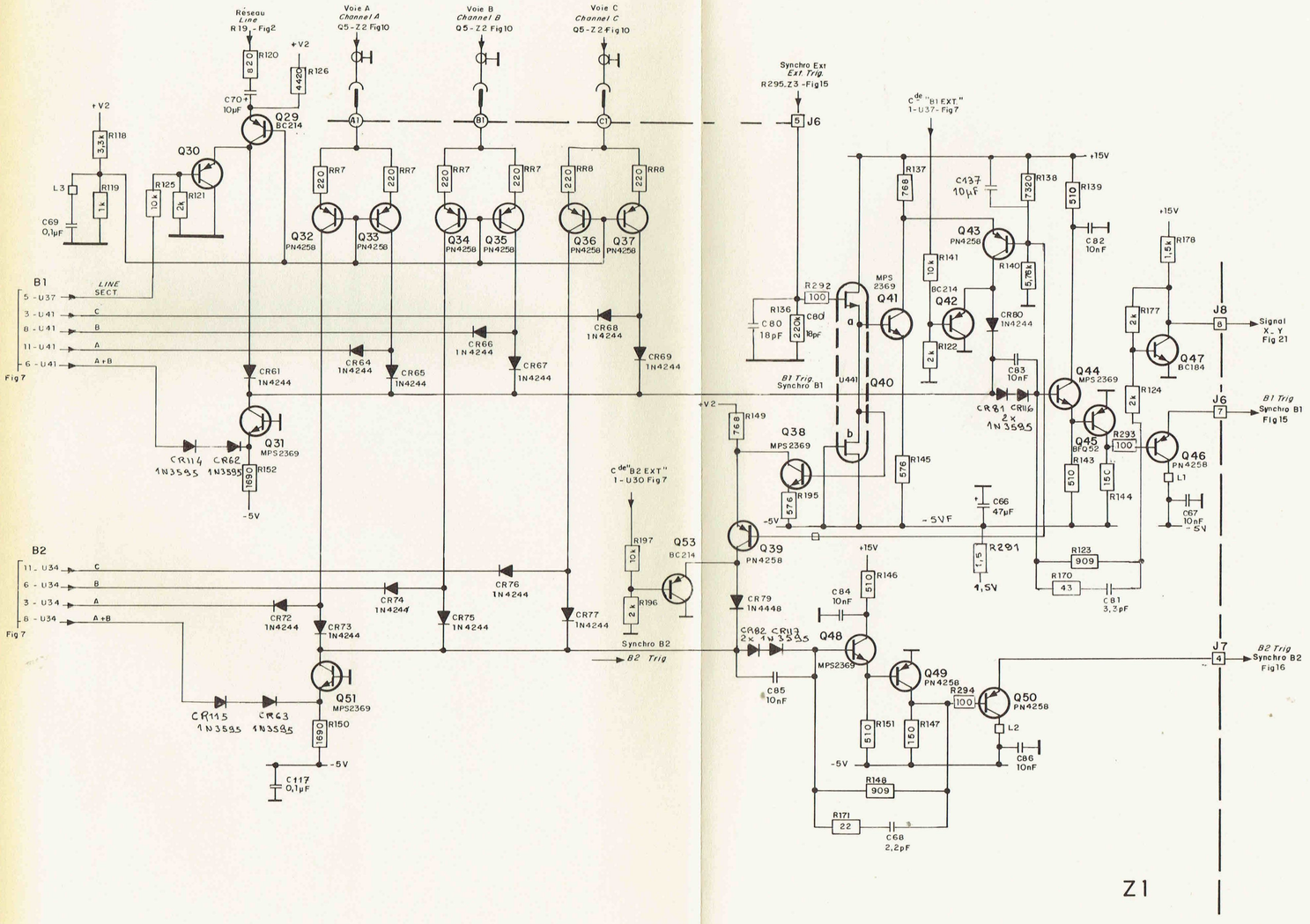

B1.B2 TRIG. AMP

Fig 9 AMPLI DE SYNCHRO B1-B2

ENERTEC Schlumberger

5277

Muller 27-9-84

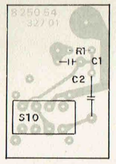

CIRCUIT Z7

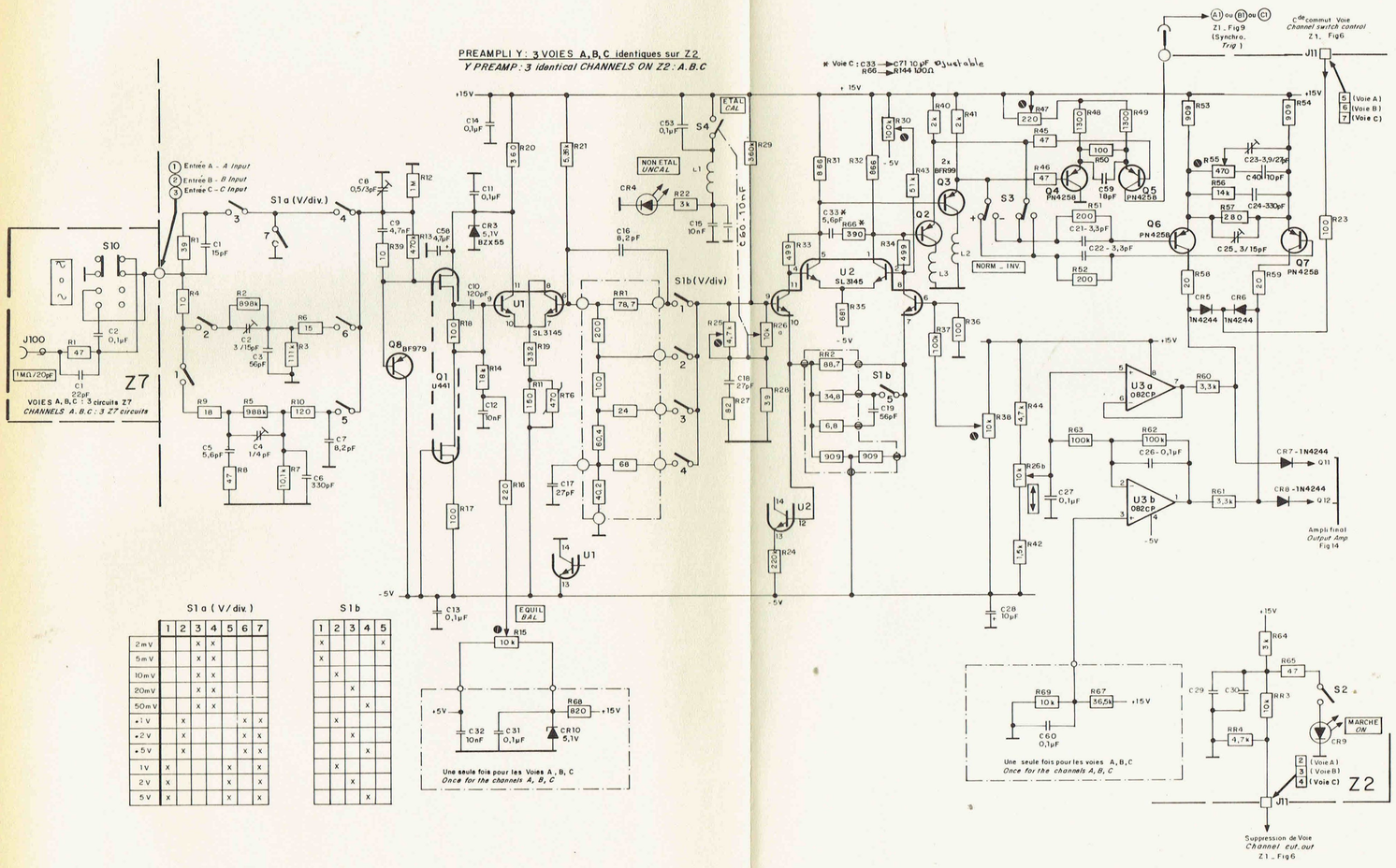

S1a (V/div.)

	1	2	3	4	5	6	7
2mV			x	x			
5mV			x	x			
10mV			x	x			
20mV			x	x			
50mV			x	x			
+1V		x				x	x
+2V		x				x	x
+5V		x				x	x
1V	x				x		x
2V	x				x		x
5V	x				x		x

S1b

1	2	3	4	5
x				x
x				
	x			
		x		
			x	
	x			
		x		
			x	
	x			
		x		
			x	

ENERTEC
Schlumberger

5277

Muller
12. 9-85

Y PREAMP CHANNELS A.B.C

PREAMPLI Y VOIES A,B,C

Fig10

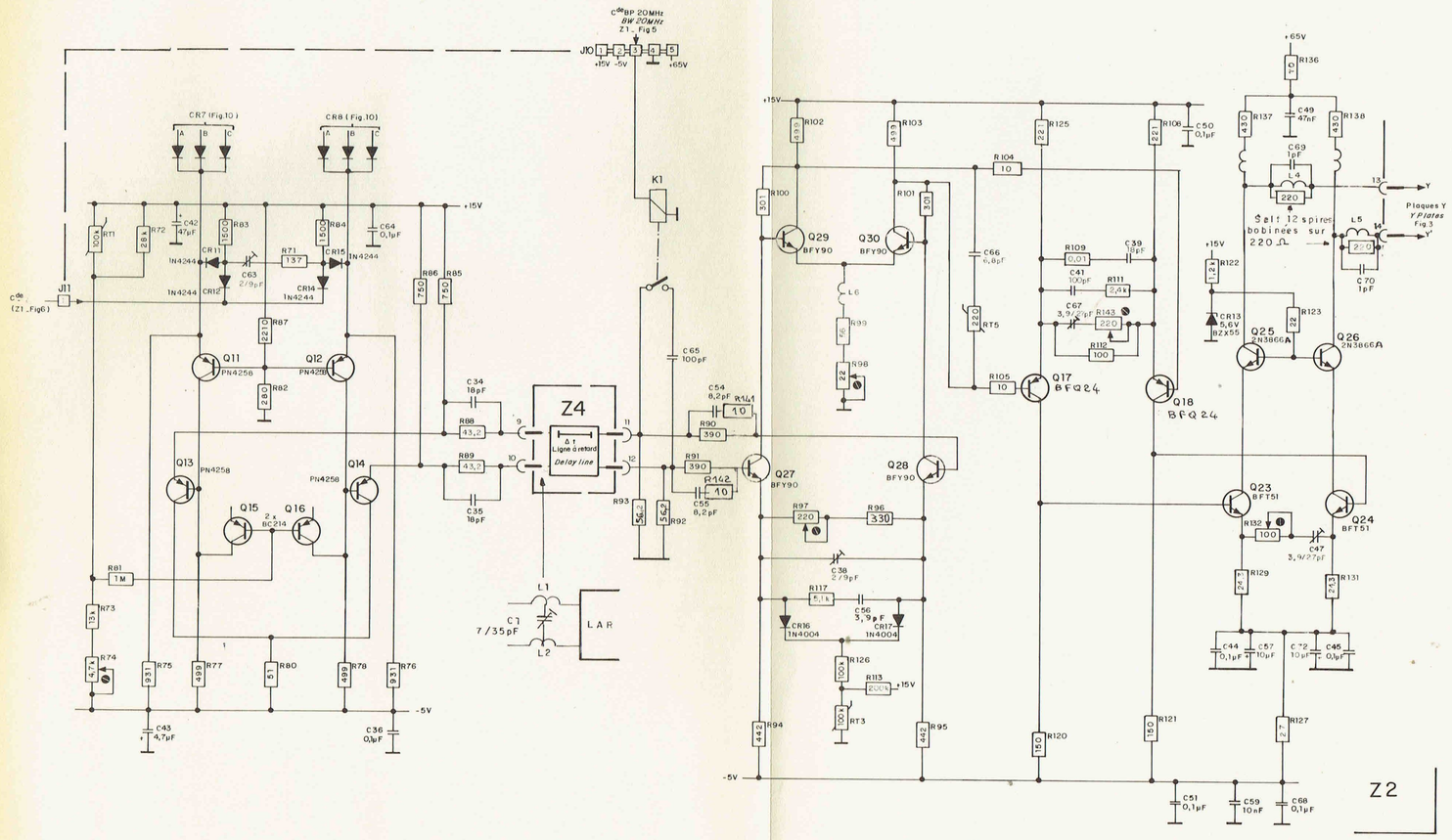

ENERTEC
Schlumberger

5277

13-1-86

Y OUTPUT AMPLIFIER

AMPLI FINAL Y

Fig 14

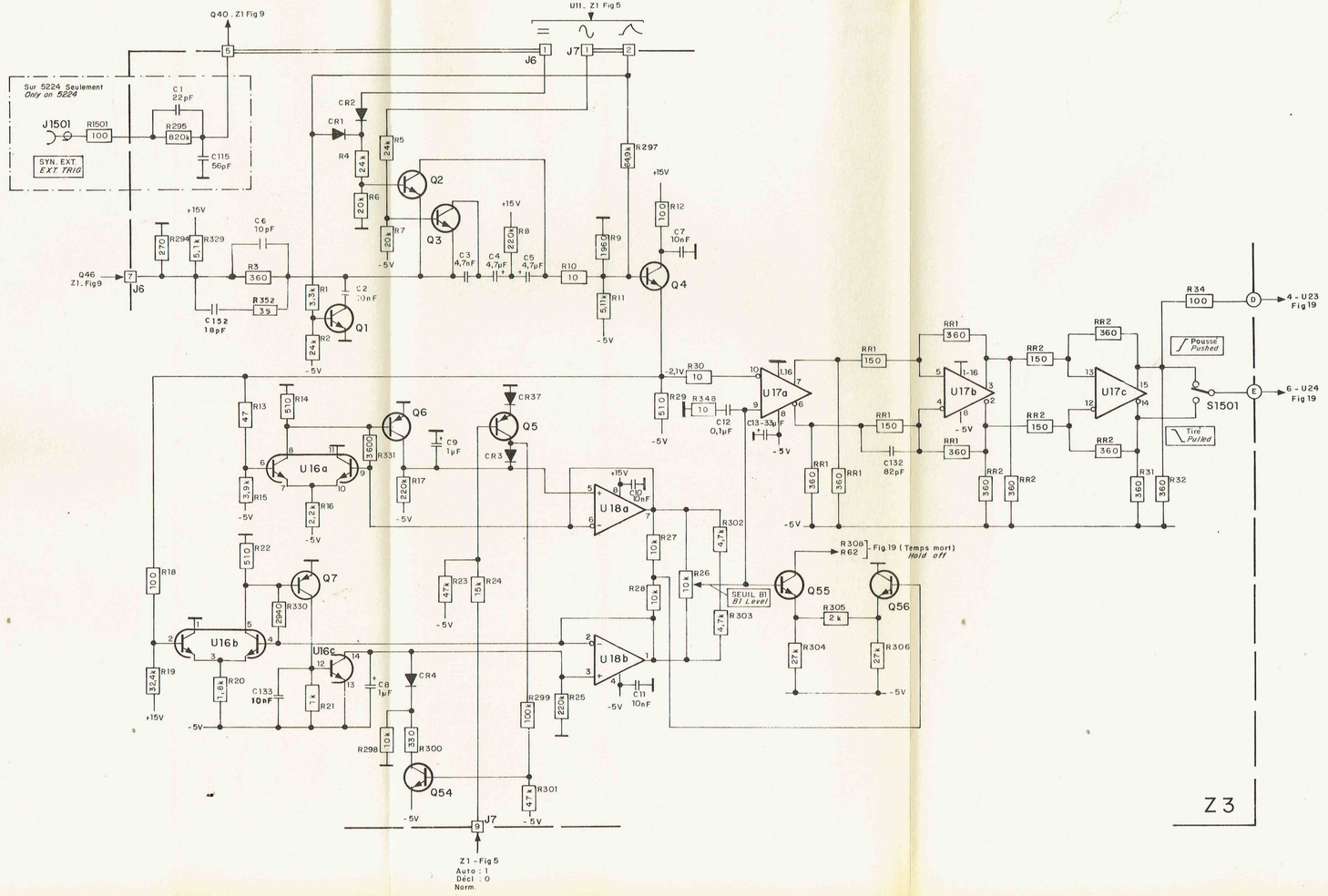

ENERTEC
Schlumberger

5227 - 5277

faller
22-1283

Fig 15 | SYNCHRONISATION B1

B1 TRIGGER

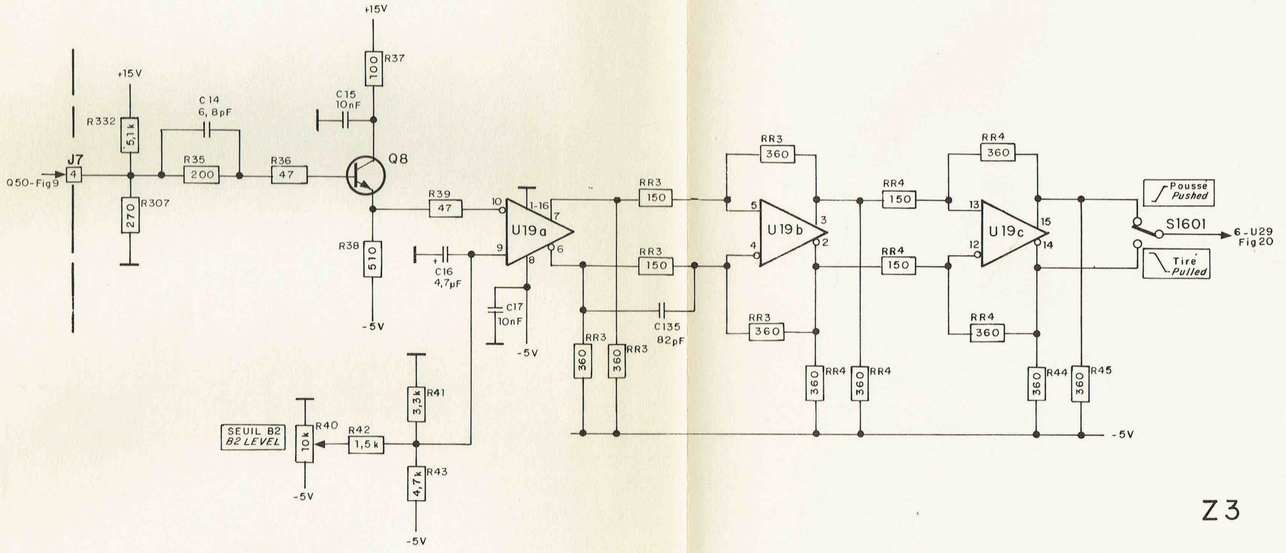

ENERTEC
Schlumberger

5227 - 5277

Muller
22-12-83

B2 TRIG

Fig 16 | SYNCHRONISATION B2

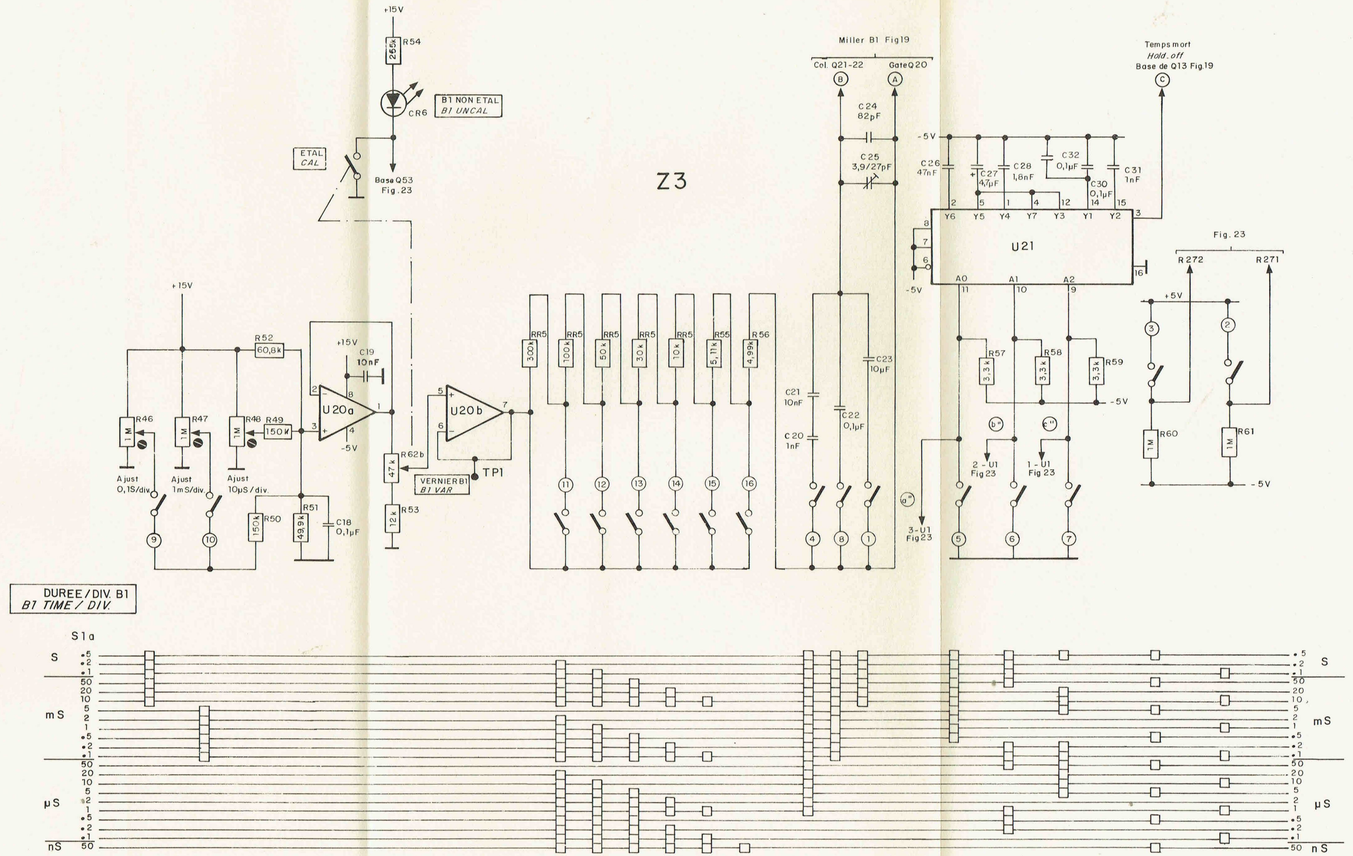

ENERTEC
Schlumberger

5227-5277

28.12.83

B1 TIME/DIV. SWITCH

Fig 17 | COMMUTATEUR DUREE/DIV. B1

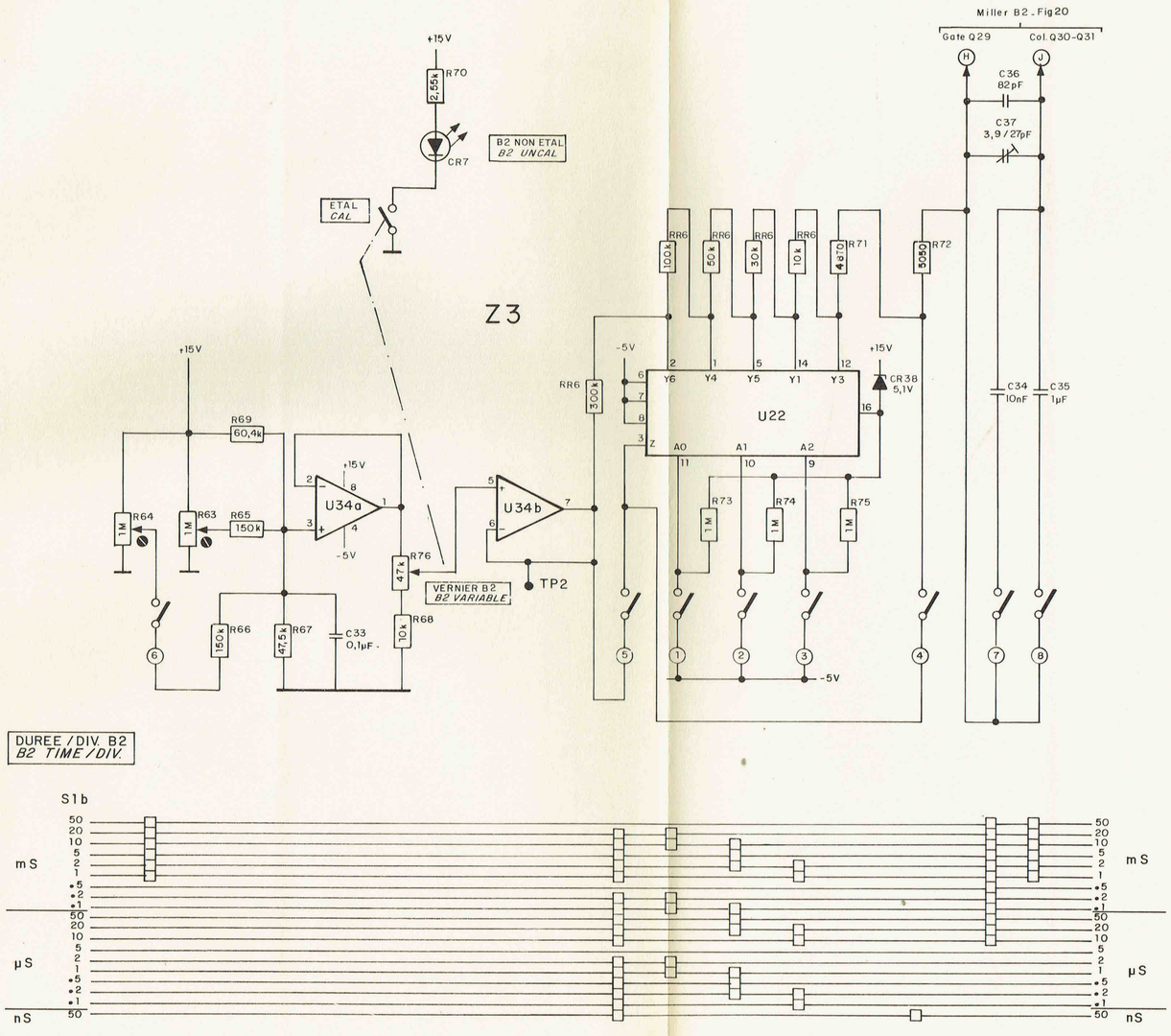

ENERTEC
Schlumberger

5227-5277

Miller
27-8-85

Fig18 COMMUTATEUR DUREE/DIV. B2 — B2 TIME DIV. SWITCH

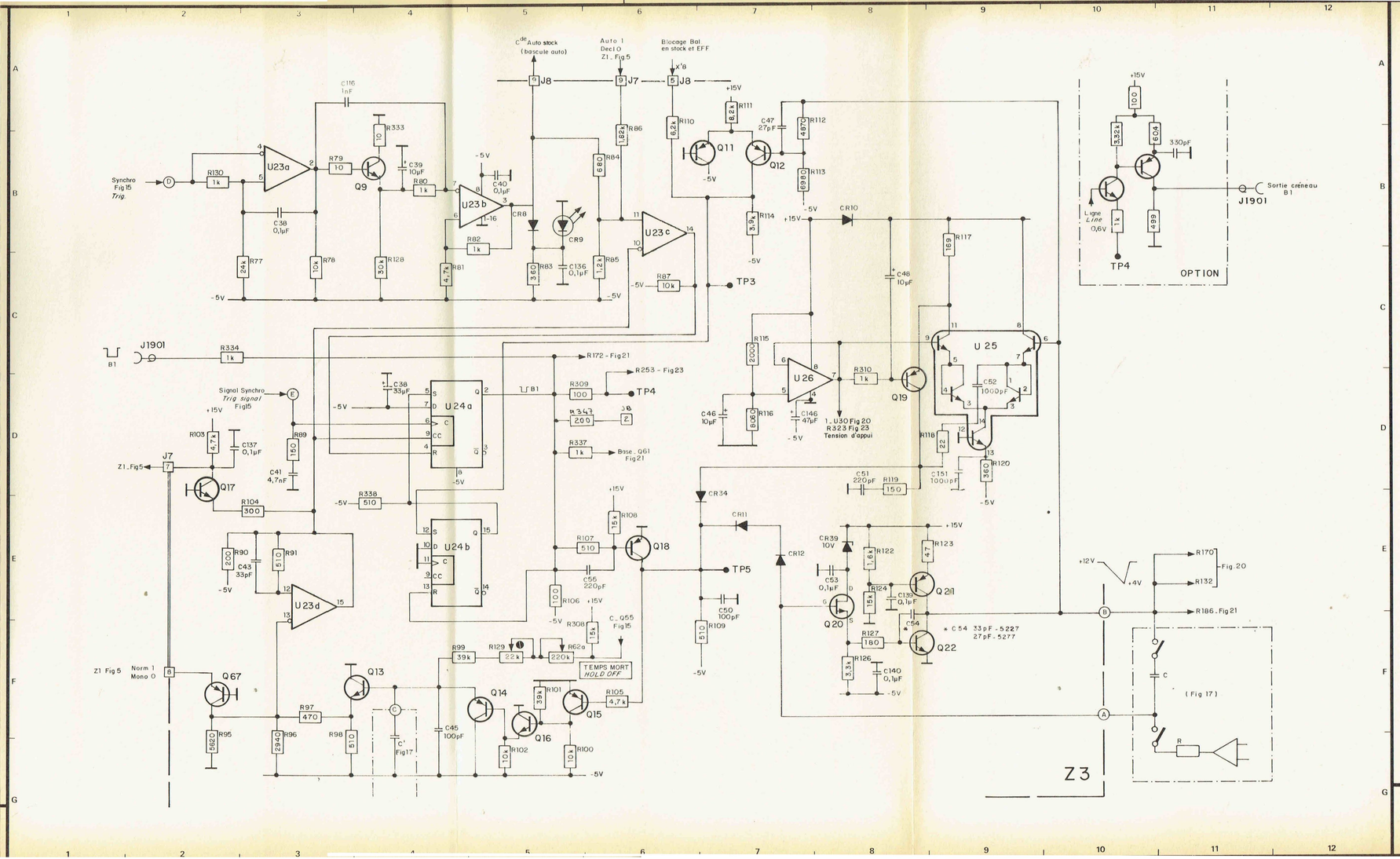

ENERTEC
Schlumberger

5227 - 5277

Muller
27-3.85

B1 TIME BASE

BASE DE TEMPS B1

Fig.19

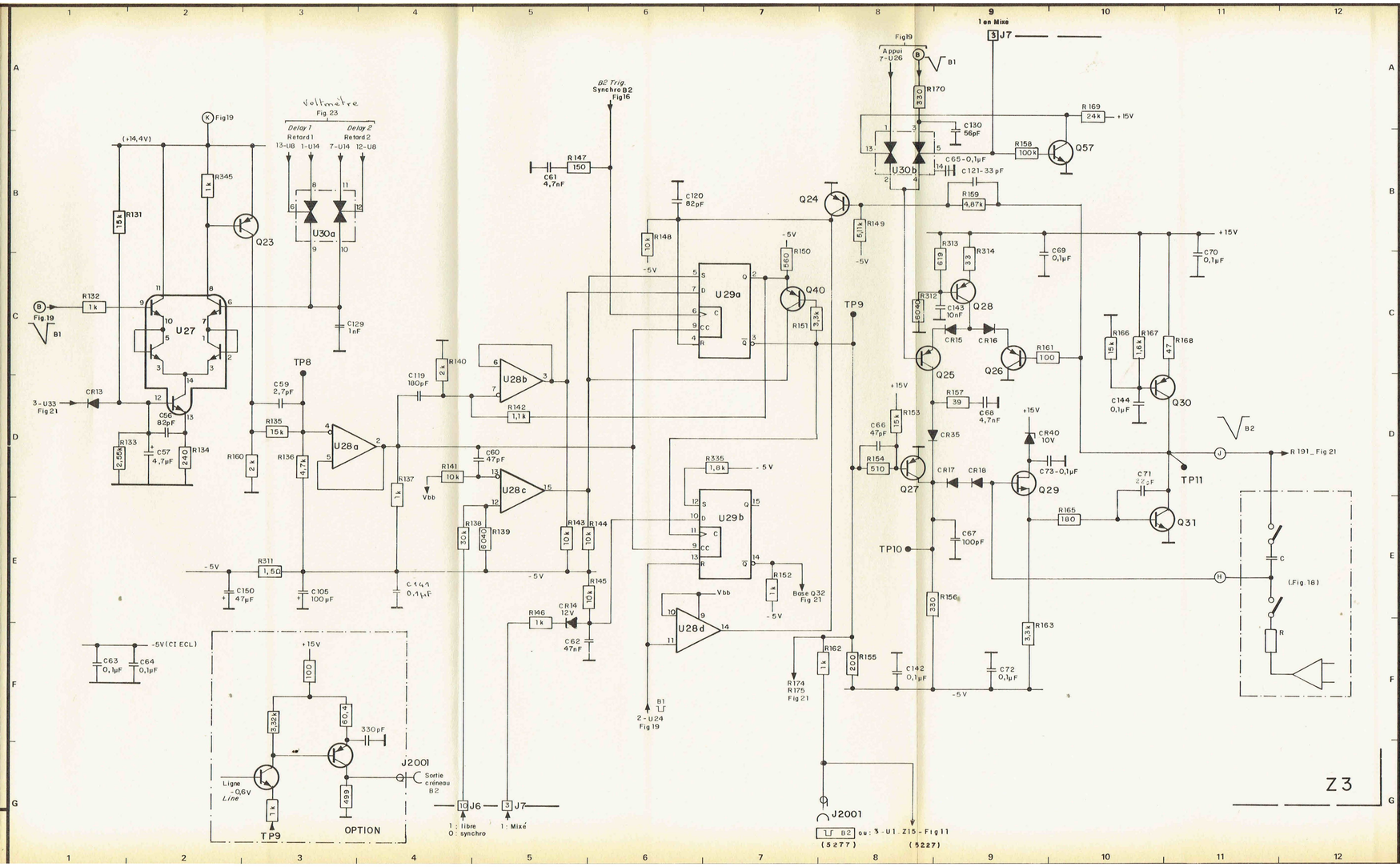
B2 TIME BASE
BASE DE TEMPS B2
Fig20
ENERTEC
Schlumberger
5227 - 5277
Voltmètre
Fig. 23
Delay 1
Retard 1
Delay 2
Retard 2
Synchro B2
Fig16
Fig19
Appui
7-U26
1 en Mixe
3 J7
R170
330
R169
24k
+15V
C130
56pF
R158
100k
Q57
U30b
C65-0,1µF
C121-33 pF
R159
4,87k
Q24
C120
82pF
R147
150
C61
4,7nF
R148
10k
R149
5,11k
R150
560
Q40
R151
3,3k
U29a
U29b
U28a
U28b
U28c
U28d
U30a
U27
R131
18k
R345
1k
Q23
R132
1k
C129
1nF
TP8
TP9
TP10
TP11
C59
2,7pF
R135
15k
R136
4,7k
R160
2k
C119
180pF
R140
2k
R142
1,1k
C60
47pF
R141
10k
R137
1k
Vbb
R138
30k
R139
6040
R143
10k
R144
10k
R145
10k
R146
1k
CR14
12V
C62
47nF
R311
1,5Ω
C150
47µF
C105
100µF
C144
0,1µF
R335
1,8k
R152
1k
Base Q32
Fig 21
R174
R175
Fig 21
R162
1k
R155
200
C142
0,1µF
C72
0,1µF
B1
2 - U24
Fig 19
J2001
1 : libre
0 : synchro
1 - Mixé
1J J6
3 J7
J2001
1J B2 ou: 3 - U1 - Z15 - Fig 11
(5277)
(5227)
R313
619
R314
33
C69
0,1µF
C70
0,1µF
R312
6040
C143
10nF
Q28
CR15
CR16
R161
100
Q26
Q25
R166
15k
R167
1,6k
R168
47
Q30
C144
0,1µF
R157
39
C68
4,7nF
CR35
R153
15k
C66
47pF
R154
510
Q27
CR17
CR18
CR40
10V
C73-0,1µF
Q29
C71
22pF
Q31
R165
180
C67
100pF
R156
330
R163
3,3k
R191_Fig 21
(Fig 18)
C
R
-5V(CI ECL)
C63
0,1µF
C64
0,1µF
100
3,32k
60,4
330pF
Ligne
-0,6V
Line
1k
499
Sortie
créneau
B2
OPTION
TP9
-5V
+15V
(+14,4V)
CR13
3 - U33
Fig 21
R133
2,55k
C57
4,7µF
R134
240
C56
82pF
Z3

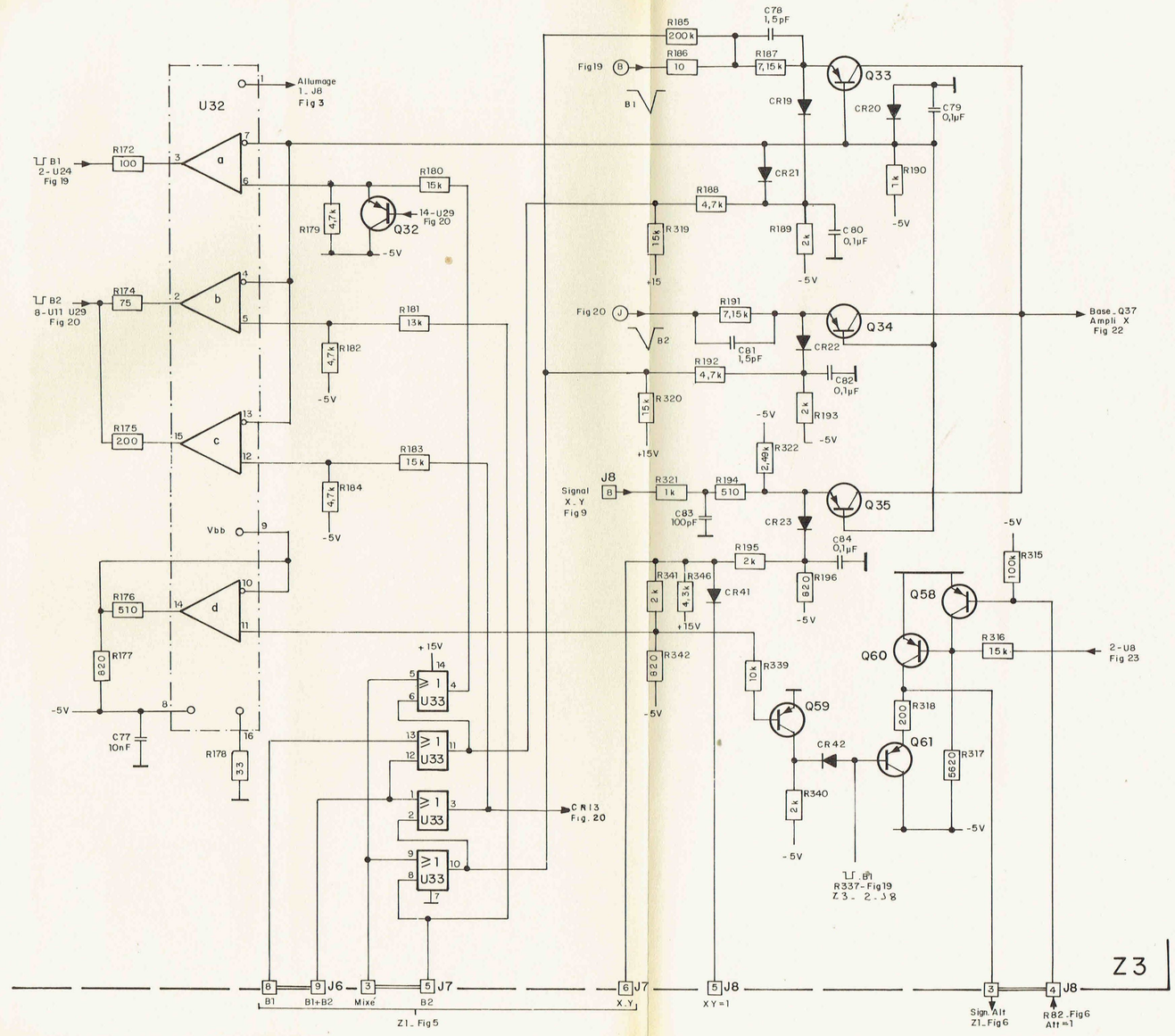

ENERTEC
Schlumberger

5227 - 5277

Muller
27.9.85

X SWITCHING

COMMUTATION X

Fig21

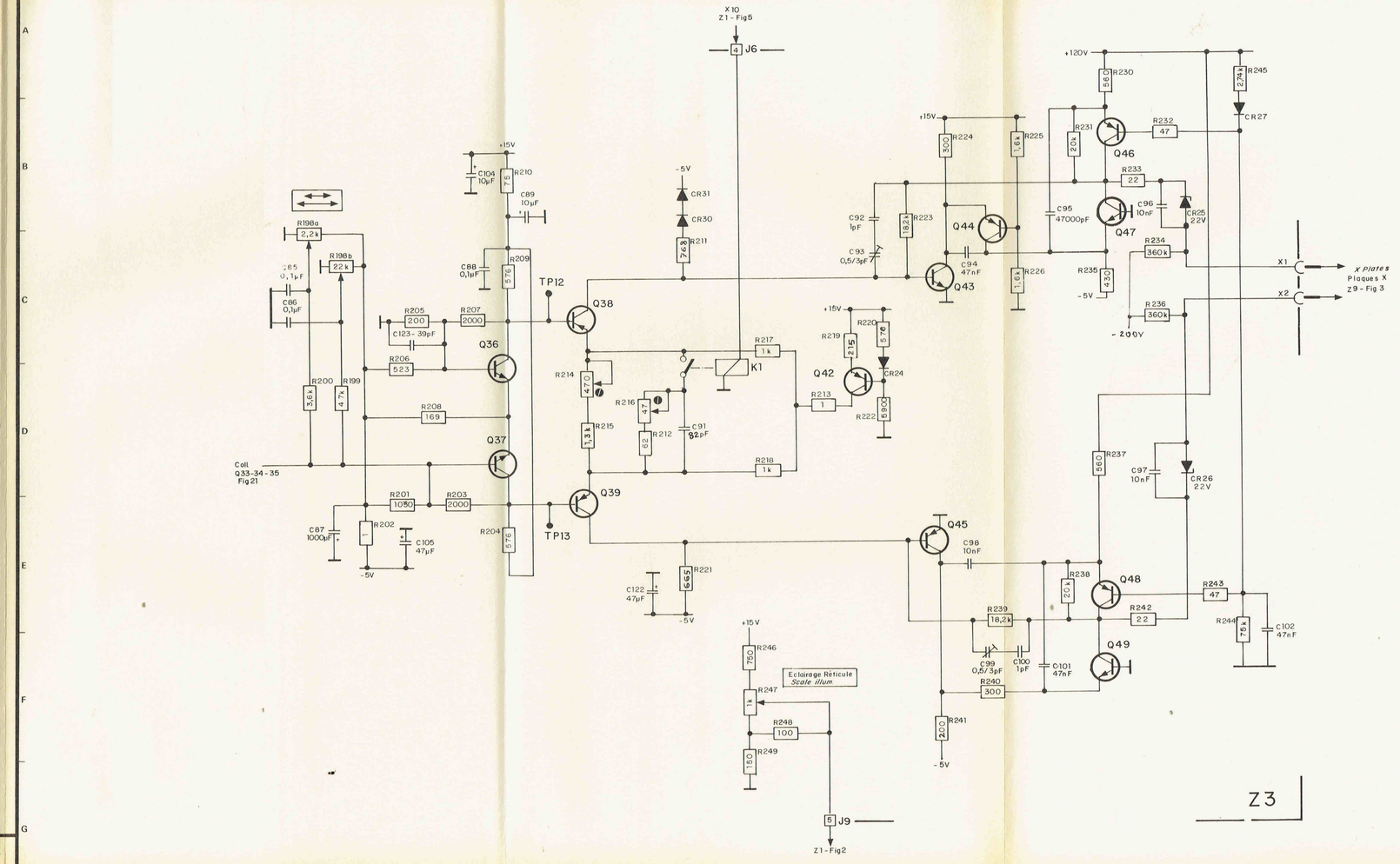

ENERTEC
Schlumberger

5227 - 5277

22-12-83

HORIZONTAL AMPLIFIER

Fig22 AMPLIFICATEUR HORIZONTAL

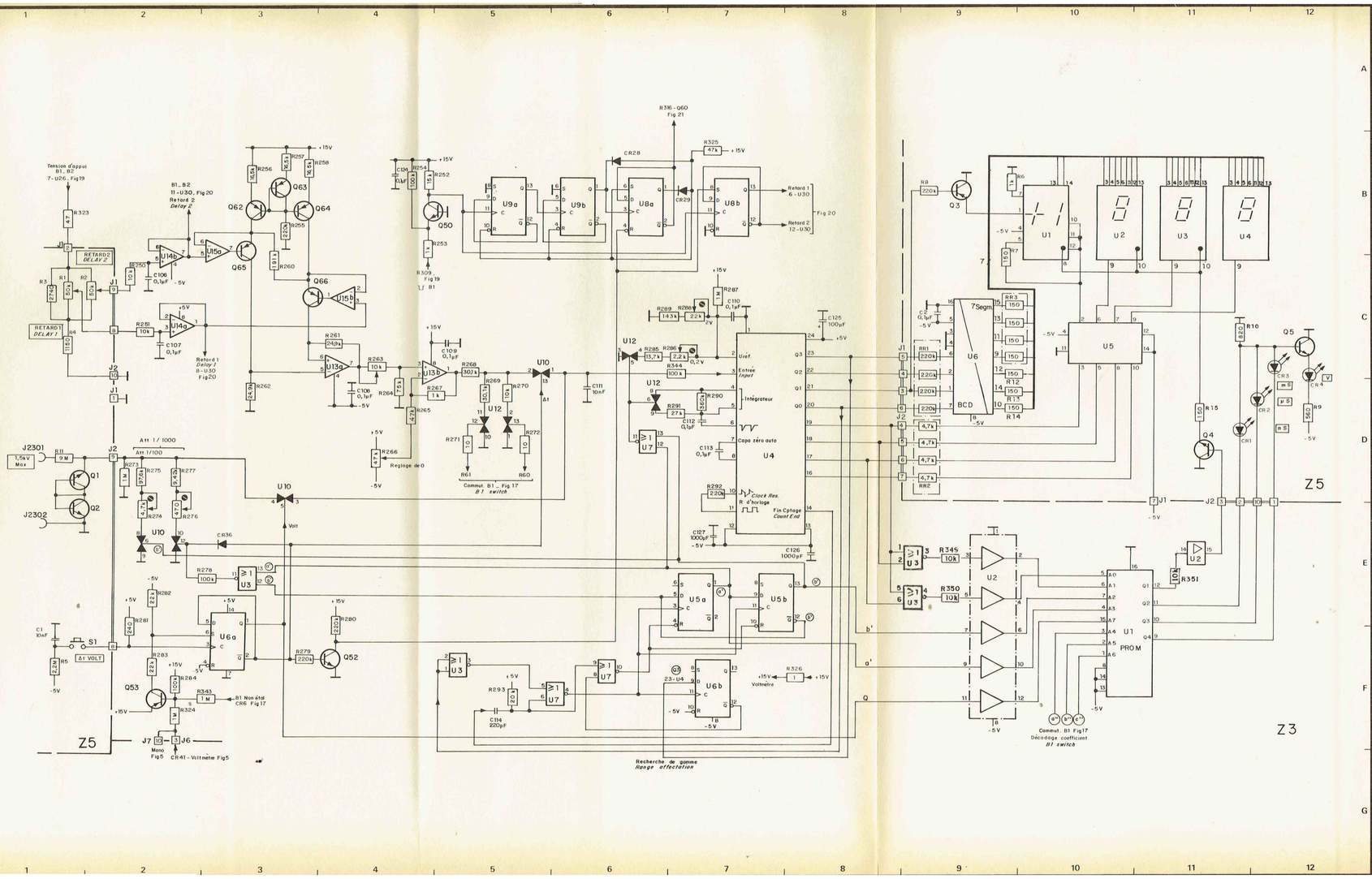

ENERTEC
Schlumberger

5227-5277

Mission
27-9-85

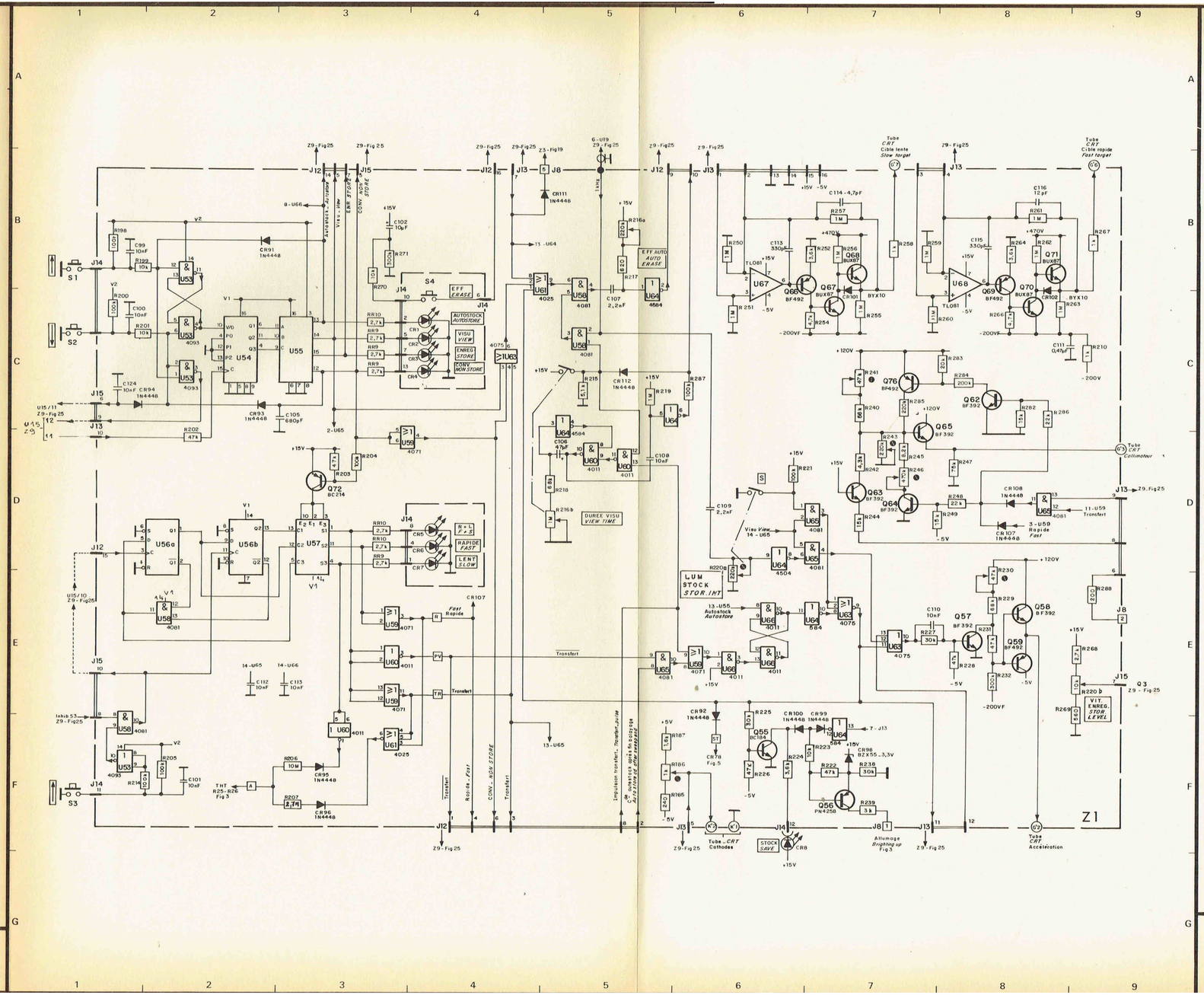

ENERTEC
Schlumberger

5277

Mulley
27-9-85

STORAGE I

MEMOIRE I

Fig 24

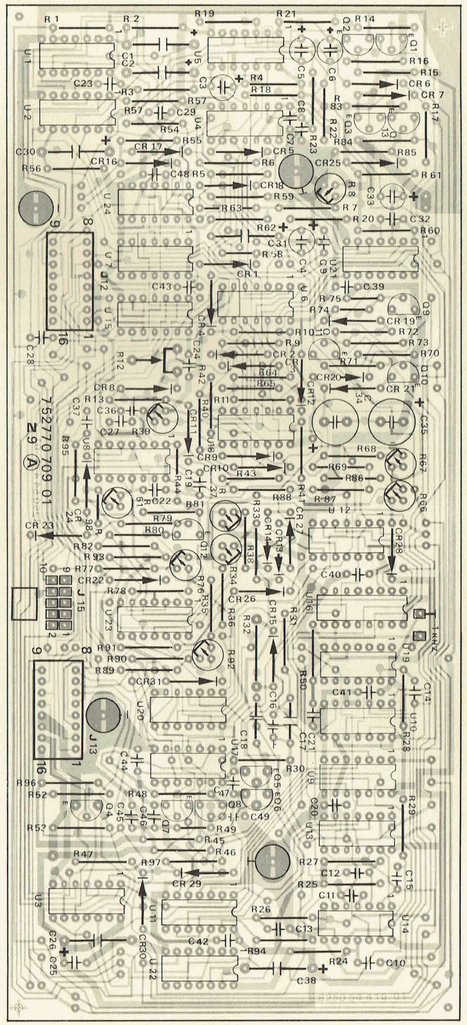

CIRCUIT Z9

ENERTEC
Schlumberger

5277

Muller
3-12-85

STORAGE II

MEMOIRE II

Fig25

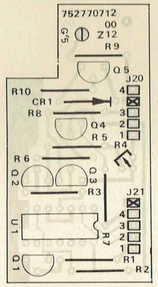

CIRCUIT Z12

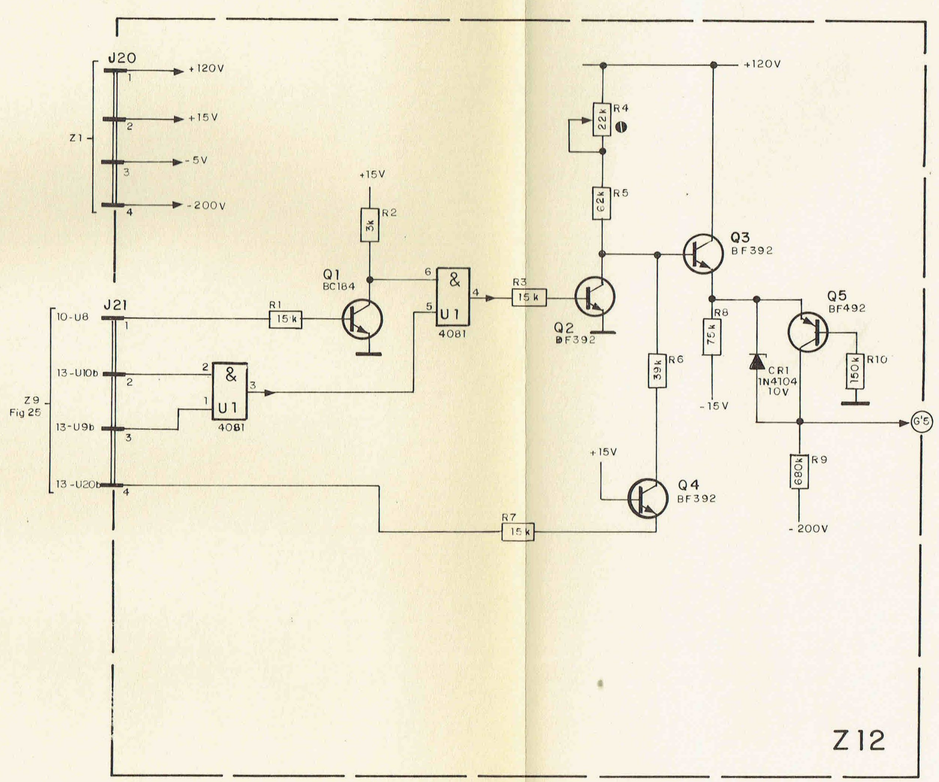

STORAGE III

MEMOIRE III

Fig 26

ENERTEC
Schlumberger

5277

Müller
18.1.84

6.- NOMENCLATURE

RECAPITULATIF

PAGES		
1		Code des boutons
2-3		Référence fabricant des éléments repérés NO dans la nomenclature
4-5		Abréviations fournisseurs
6	7 5277 0020	Accessoires
	7 5227 0021	Option : prise d'alimentation sonde active
7	7 5277 0050	Habillage
	7 5277 0051	Equipement avant
8	7 5277 0053	Equipement de platine
		Platines sérigraphiées
9	7 5277 0300	Sous-ensemble bloc alimentation
10	7 5277 0400	Tube cathodique
	7 0218 0010	Eclairage de tube
11	7 5277 0500	Raccordement électrique et mécanique
12	7 5277 8021	Circuit Z1 - Carte alimentation
27	7 5277 4101	Circuit Z2 - Carte Y
28	7 5277 1011	Z2 (suite) - Préampli voies A, B ou C
31	7 5277 1101	Z2 (suite) - Préampli voie A seulement
32	7 5277 1141	Z2 (suite) - Final Y
35	7 5224 9151	Circuit Z3 - Carte X
48	7 5277 1143	Circuit Z4 - Ligne à retard
49	7 5224 1232	Circuit Z5 - Carte voltmètre
50	7 5224 1041	Circuit Z6 - Clavier
52	7 5224 1103	Circuit Z7 - Entrée Y (voies A, B ou C)
	7 5277 1032	Circuit Z8 - Post-accélération
53	7 5277 1251	Circuit Z9 - Mémoire
58	7 5277 1242	Circuit Z10- Mémoire
	7 5277 2412	Circuit Z12- Mémoire
59	7 5277 0450	Interconnexion châssis

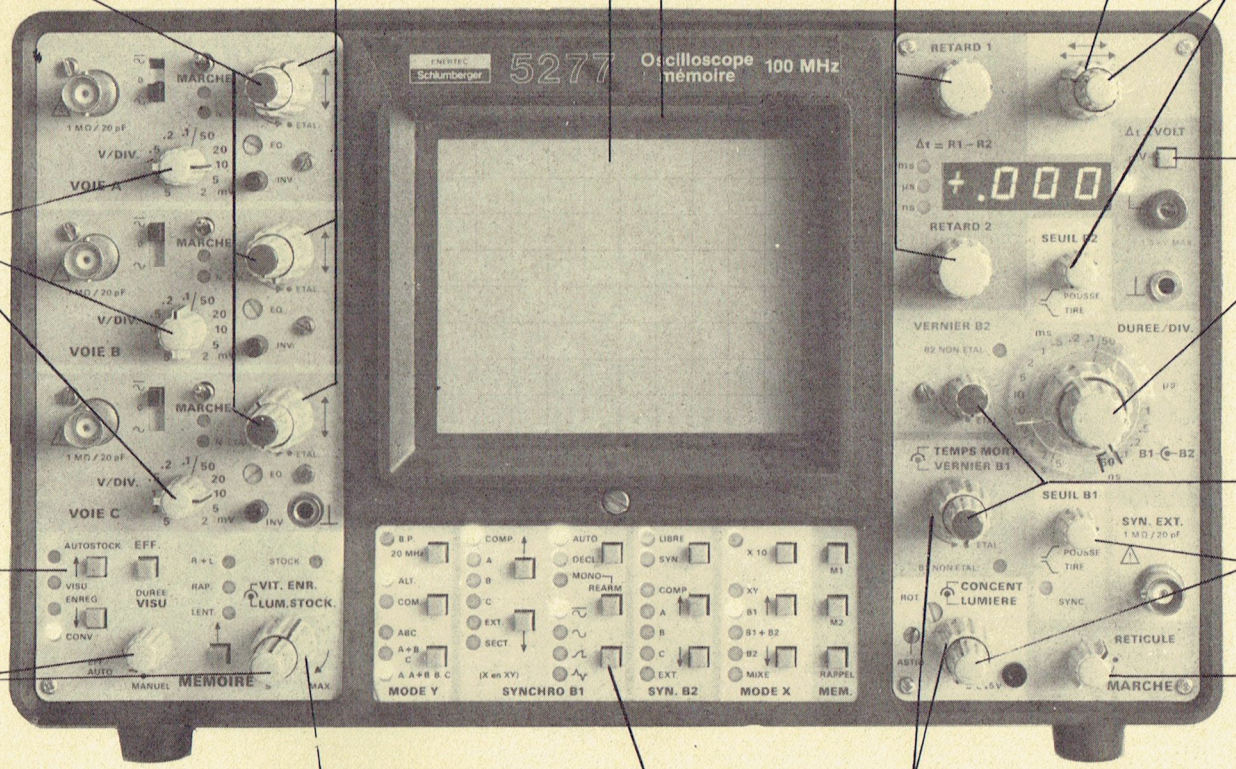

Neutral 859541005

Cache avant du tube 877541007

3 Boutons gris 219621344

3 Boutons gris 219621231 + capuchon rouge 219614592

2 Boutons gris 219621351 + capuchon gris 219614516

1 Bouton gris 219621344

2 Boutons gris 219621231 + capuchon gris 219614590

Bouton commutateur 874041026

3 Boutons gris 219623231 + capuchon gris 219614590

Bouton Base de temps complet 752120500

Bouton gris 219621231 + capuchon rouge 219614592

3 Boutons commutateurs 874041026

2 Boutons gris 219621231 + capuchon gris 219614590

2 Boutons gris 219621231 + capuchon gris 219614590

Bouton gris 219623231 + capuchon gris 219614590

Bouton gris 219621344

17 Boutons commutateurs 874041026

2 Boutons gris 219621344

Capot supérieur 887222108
Capot inférieur 887222109
4 Pieds PVC 314602015
Couvercle protecteur avant 752200015

CODE DES BOUTONS PANNEAU AVANT ET DE QUELQUES PIECES COURANTES

5277

REFERENCE FABRICANT DES ELEMENTS

REPERES N0 DANS LA NOMENCLATURE

RESISTANCES

NO101	2,7 Ω - 4,7 Ω - 6,2 Ω	BB 1/8	ALLEN BRADLEY
	10 Ω à 150 kΩ	NK3	SOVCOR
	160 Ω à 100 MΩ	BB 1/8	ALLEN BRADLEY
NO102	1 Ω à 1 MΩ	CR25	COGECO
	0,22 à 2,2 MΩ	LCA 0207	DRALORIC
	0,5 à 5,1 MΩ	R25 J	ROHM
NO103	1 Ω à 1 MΩ	CR25	COGECO
	0,22 à 2,2 MΩ	LCA 0207	DRALORIC
NO106	2,2 Ω à 4,7 MΩ 5%	LCA 0411	DRALORIC
	4,7 Ω à 1 MΩ 5%	CR37	COGECO
	1,2 à 10 MΩ 10%	CR37	COGECO
	2,2 à 4,7 MΩ 5%	LCA 0411	DRALORIC
NO112	1 Ω à 1 MΩ	SMA 0207	DRALORIC
NO121	4,7 à 22 kΩ	ROP 2	SFERNICE
NO131	20 Ω à 39 kΩ	ROP 4	SFERNICE
NO141	20 Ω à 56 kΩ	ROP 6	SFERNICE
NO190	Réseau 7 x 68 Ω à 470 kΩ	784-1 R - xxx	BECKMANN

CONDENSATEURS

NO203	0,1 µF à 100 µF	TAG (1 à 11) F	I T T
NO205	1 µF à 330 µF	S1 - CTS 13	FIRADEC
NO220	4,7 µF à 2200 µF	SLVB F5	CHEMI-CON.
NO221	4,7 µF	2222-015-90003	COGECO
	10 µF	2222-015-16109	COGECO
	22 µF	2222-015-16229	COGECO
	4,7 µF 10 V	2222-015-14479	COGECO
	47 µF 63 V	2222-016-18479	COGECO
	100 µF 25 V	2222-016-16101	COGECO
	100 µF 63 V	2222-017-18101	COGECO
	470 µF	2222-017-16471	COGECO
	1000 µF	2222-017-16471	COGECO
NO227	680 à 47000 µF	Felsic 038	SIC SAFCO
	470 µF	Felsic 039	SIC SAFCO
NO242	470 pF	2222-630-03471	COGECO
	820 pF	2222-630-03821	COGECO
	1000 pF	2222-630-03102	COGECO
	1500 pF	2222-630-03152	COGECO
	2200 pF	2222-630-03222	COGECO
	3300 pF	2222-630-03332	COGECO
	4700 pF	GOX 742	LCC
	10000 pF	GOY 753	LCC
	47000 pF	GSY 612	LCC

NO243	68 pF à 470 pF	GIZ 606	LCC
	560 pF à 820 pF	GIZ 608	LCC
	1000 pF à 1800 pF	GIZ 611	LCC
	2200 pF à 3900 pF	GIZ 615	LCC
	4700 pF	GIX 611	LCC
	10000 pF	GIX 615	LCC
NO245	1 pF à 3,9 pF	GOA 604	LCC
	4,7 pF à 6,8 pF	GOC 604	LCC
	8,2 pF à 22 pF	GOC 731	LCC
	27 pF	GOC 742	LCC
	33 pF - 39 pF	GOC 742	LCC
	47 pF - 56 pF	GOU 731	LCC
	68 pF - 82 pF - 100 pF	GOU 742	LCC
	120 pF - 150 pF	GOU 753	LCC
	180 pF - 220 pF - 270 pF	GOU 764	LCC
	330 pF	GOU 765	LCC
NO246	1 pF à 3,3 pF	GUA 606	LCC
	3,9 pF à 6,8 pF	GUP 606	LCC
	8,2 pF à 12 pF	GUP 608	LCC
	15 pF à 22 pF	GUP 611	LCC
	27 pF et 33 pF	GUU 608	LCC
	39 pF à 56 pF	GUU 611	LCC
NO247	100 pF à 3300 pF	PLZ 912 E	LCC
	4700 pF et 5600 pF	PLZ 912 D	LCC
	10 000 pF	PLZ 912 C	LCC
	22 000 pF	PLZ 913 E	LCC
	47 000 pF	PLZ 913 D	LCC
NO248	1 pF à 150 pF	PLA 912 E	LCC
	180 pF - 220 pF	PLA 912 D	LCC
	330 pF - 470 pF	PLC 912 C	LCC
NO249	47 pF	BDBK - 400 V 20% N1500 1B	DRALORIC
	1000 pF	BDBK-400 V-20 + 80% R4000	DRALORIC
NO251	0,001 µF	KEI 210	LCC
	0,01 µF	KEG 213	LCC
	0,1 µF	KEF 218	LCC
	1 µF	KEF 231	LCC
NO263	0,01 µF - 0,022 µF	IFI 013	LCC
	0,047 µF - 0,1 µF	IFG 013	LCC
	0,22 µF	IFG 018	LCC
	0,47 µF	IFG 023	LCC
	1 µF	IFG 031	LCC
	0,1 µF - 400 V	IFI 018	LCC

POTENTIOMETRES

NO314	palier Ø 6 mm	P14 TRA	SFERNICE
	palier Ø 8 mm	P14 XRA	SFERNICE
NO332	montage horizontal	VA05 H	OHMIC
	montage vertical	VA05 V	OHMIC

ABREVIATIONS FOURNISSEURS

AC-PH	Acier Phénix
ACCEL	ACCEL.
ACME	ACME
ADIP	ADIP
ADR	Application du roulement
ADRET	Adret
AEG	AEG Téléfunken
AEMGP	AEMGP
AERTE	Aertech
AGDE	Agde
AGFA	Agfa Gevaert
AGUIL	Aguilar
AIEV	A.I.E.V
AKA	Aka
ALCAT	Alcatel
ALLEN	Allen Bradley
ALTOF	Altoflex
ALTUL	Altulor
AMB-P	AMB Production
A.M.D	A.M.D
AMP	A.M.P
AMPHE	Amphénol
ANDEV	Analog. Dévices
ANSLE	Ansley
ANZAC	Anzac
AP	Angst et Pfister
AP-IN	AP Incorp.
APLIX	Aplix S.A.
APR	APR
APTEX	Aptex
AQ-OR	Aquitaine Organico
ARCAP	Arcap
ARE	A.R.E
ARELC	ARELEC
ARENA	Arena
ARMST	Armstrong
ARNOU	Arnould Electro Industrie
ASO	Aso
ASTRL	Astral
ATC	American Technical Céramics
ATI	A.T.I.
ATO	Ato Plastichimie
ATOMS	Atoms
AUGAT	Augat
AUSTE	Austerlitz Electric
AUXIL	Auxilec
AVDEL	AVDEL
BAEHN	Sté William Baeni
BAGJA	Bagajavion
BAHCO	Bahco
BAL	Brossette Alu.
BALL	Ball Brothers Research Corp.
BARNI	Barnier
BASF	BASF
BAUDO	Baudoint Nogent
BB	Burr-Brown
BEAL	Béal
BECKM	Beckman
BECMA	Beckman
BEDEL	Bedel
BEE	Bureau d'Etudes et d'Electronique
BELZE	Belzer
BELZR	Belzer
BENZI	Benzing
BEPRO	Best Products
BERG	Berg Electronics
BLOCH	Bloch
BOHIN	Tréfileries Bohin
BOSTI	Bostik
BOULA	Boulay Marc
BOUR	Précicable-Bour
BOURB	Bourbon et Fils
BOURN	Bourns
BR-LE	Brion-Leroux
BR-RE	Brand Rex
BTR	BTR
BUHLR	Buhler
BURND	Burndy
CML	C.M.L
CA	Cuivres et Alliages
CADDO	Caddock
CAMBI	Cambion
CAMBN	Cambion
CAMLO	Camloc France
CANET	Canetti
CANON	Cannon Electric
CAPI	C.A.P.I
CASBA	Casbar
CASTO	Castolin
CAUBR	Caubère
CEBE	Block Manufacture Cebe
CEF	Cef
CEFIL	Çefilac
CEHES	Cehess
CELDU	Celduc
CELLO	La Cellofibre
CEM	CEM
CEPE	Cie Electronique et Piézoélectrique
CFD	Cie F^{ee} Diagramme
CFE	Cie F^{ee} de l'étain
CFI	Cie F^{ee} des Isolants
CG	Contrôle graphique
CGCT	CGCT
CGS	C.G.S
CHARP	Charpe Frères
CHAUM	Chaume
CHEMC	Chemical Electronique
CHERY	Cherry
CHICA	Chicago Miniatures lamps
CHILL	Chillet
CHROM	Chromex
CIDEC	Cidecou
CK	C et K (Switches)
CLARE	Clare Electronique
CLIMA	Climax France
CLO	Clo Electronique
CMIC	CMIC
COAXC	Coaxco
CODIM	Codima
COFEL	Cofelec
COFRA	Coframap
COGEC	Cogeco
COMAT	Comatel
COMEP	Comepa
COMET	Comet
CONNE	Connectral
CONTE	Contelec
CONTR	Contravès
COPER	Coper
CORCO	Corcom
COREL	Corel
CRC	Enertec St-Etienne
CRELO	Creusot-Loire
CRL	CRL (voir Draloric)
CROUZ	Crouzet
CS-SE	Schlumberger St-Etienne
CSEE	Cie des Signaux d'Entreprises Electriques
CSF	Thomson CSF
CUPRO	Cuprofil
CURTI	Curtis-Instruments
DALE	Dale
DALIC	Dalic
DATEL	Datel
DAU	Dau
DAUT	Daut + Rietz
DAVUM	Davum
DE-CA	Descours et Cabaud
DECEL	Decelect
DELEV	Delevan
DESPL	Desplanques
DEUTC	Deutsch
DEXIO	Dexion Feralco
DIA-N	Dia Nielsen
DICKS	Dickson
DIELA	Diela
DORVI	Dorvit
DPI	Diffusion Prospection Industrie
DR-DI	Drouet-Diamond
DRALD	Draloric
DRALO	Draloric
DRALR	Draloric
DRALW	Draloric
DUPON	Dupont de Nemours
DYNA	Dyna
DZUS	Dzus France
ECC	E.C.C
E-E-E	Europe Electronic Equi.
E-E-V	English Electric Valve
E-S-F	Equipt Scientif. Forézien
EECO	E.E.C.O
EFCIS	Thomson-Efcis
EFCO	EFCO-JM Frankel
EGEE	EGEE
EIMAC	EIMAC
ELCO	Elco
ELECO	Eleco
ELECT	Electrofil
ELF	Elf
ELFIT	Elfit
ELMA	Elma
ENERT	Enertec
EREL	Erel
ERFI	E.R.F.I
ERIBE	Eribe
ERIDI	Eridian
ERIE	Erie Electronics
ERO	Eromet-Ero Tantale
ES-SE	Enertec Schlumberger St-Etienne
ESTC	E.S.T.C
ETRI	Etri
EUROF	Eurofarad
EUROP	Europavia France
FACA	Faca
FACOM	Facom
FAG	FAG Roulements
FAIRC	Fairchild
FAISA	Faisant
FAVA	Favacoutiq
FAYAR	Fayard
FCRAN	Forges de Crans
FGET	F.G.E.T
FI-DI	Fifth Dimension Inc.
FIABL	Fiable
FILEC	Fileca
FILOT	Filotex
FIRAD	Firadec
FISCH	Fischer
FL-BE	Flonic-Besançon
FM	FM
FOMOP	Fomop
FONDE	Fondex
FOP	Fop outillage
FRAPI	Frapinox
FRAPP	Frappaz
FRB	FRB Connectron
FRISC	Frischer
GE	Général Electric
GAGGI	Gaggione
GAM	Générale Application des Métaux
GANTO	Gantois
GARIN	Garin
GARRY	Garry
GAUTH	Gauthier J.
GEKA	Geka
GENEL	Général Electric
GENRA	Général Radio France
GI	Général Instrument France
GILFO	Gilby-Fodor
GIOUX	Gioux A.
GOBIN	Gobin Daudé
GORE	Gore
GRAYH	Gray Hill
GRW	G.R.W
GUITE	Guitel Etienne Mobilor
HABIA	Habia S.A
HARRI	Harris
HARTI	Harting
HAUCK	Hauck
HEIMA	Heimann
HEITO	Heito
HELLR	Hellermann France
HENKE	Henkel et Cie
HEYMA	Heyman
HIRSC	Hirschmann
HOFFM	Hoffmann
HONEY	Honeywell Bull
HP	Hewlett Packard
HUFA	Hufa France
HUGON	Hugoniot
HYBRI	Hybrid Systems
IBM	IBM France
ICI	ICI France
IEC	IEC Electronique
IER	I.E.R.
IERC	I.E.R.C
IMPER	Impervia
IMPEX	Impex
IN-SP	Instrument spécialties
INT-C	Inter Composants
INTEL	Intel
INTIL	Intersil
IR	International Rectifiers
IRC	I.R.C (TRW)
ISC	I.S.C.
ISOLA	Isolantite
ISOST	Isostat
ITT	ITT Instruments et Composants
JAC-F	JAC France
JAEGE	Jaeger
JAHNI	Jahnichen
JALU	Jalu
JARDI	Jardiller
JEANR	Jeanrenaud
JEHER	Jeher
JERMY	Jermyn
JFD	JFD Electronics Europe
JOINT	Le Joint Français
JUPIT	Jupiter
KABEL	Kabelmétal
KAUTT	Kautt et Bux
KB	Klar et Bellachmidt
KEMET	Kemet
KEMME	Kemmer (CCI)
KEYST	Keystone (Texmo)
KF	Siceron KF
KMC	K.M.C Semiconductors
KNITT	Knitter Switch
KNOTT	Knott Electronik

KODAK	Kodak-Pathe
KONTR	Kontron
KORUN	Korundal
KVG	K.V.G.
LAFAB	Lafab
LAMBD	Lambda Electronique
LAMRI	Lambert Rivière
LCC	LCC-CICE
LEGRA	Legrand
LEJEU	Lejeune
LERC	Lerc
LETU	Letu
LGC	L.G.C
LIPA	Lipa
LIRE	Lire
LITRO	Litronix
LITTO	Litton
LOG-E	Log-Elec.
LOUPO	Loupot
LPE	Laboratoire Piézoélectricité
LTT	Lignes Télégraphiques Téléphoniques
M/THE	Microtherm
MA-PR	Marlin Prunier
MALLO	Mallory Durancell
MARCO	Marcoussis (Labo de)
MARET	Maret
MAREU	Manuf. réunies St-Chamond
MARGU	Marguet
MARQA	Marquardt
MARQU	Marquardt
MATEL	Matel
MATER	Matéra
MATSU	Matsuo
MAZDA	Mazda
MCB	MCB Alter
MECAG	Mecagis
MECAL	Mecalectro
MECAN	Mecanindus
MEKTR	Mektron
MENTO	Mentor
METAD	Le Métal Déployé
METAF	Métafram
METAL	Métallo
METEX	Metex Electronic
METIN	Metinox
METOX	Metox
MFOEM	MFOEM
MFOM	MFOM
MI-AS	Microwave Associate Inc.
MI-PW	Microcomputer Power
MICRO	Micro
MIM	Manufacture d'Injection Moderne
MINES	Minesota France
MKL	M.K.L
MMT	Manufacture Métallurgique de Tournus
MOB	MOB Outillage
MOLEX	Molex
MONIN	Monin
MONSA	Monsanto
MOSSA	Mossalgue
MOSTK	Mostek
MOTOR	Motorola
MR	Manufactures Réunies St-Chamond
MSI	MSI Electronic
MYRRA	MYRRA
3M	3M (Minesota)
N-CHE	Nippon Chemical Condenser
NA-CH	National Chemsearch
NADEL	Nadella
NATIO	National (AEMGP)
NBPLA	NB Plastique
NEC	Nippon Electric Co Ltd
NEOSI	Néosid
NIC	N.I.C
NOMEL	Nomel
NORWE	Norwe
NOVAC	Novacel
NOVEA	Novea
NS	National Semiconductor
OAK	OAK
ODENW	Odenwalder Kunststoffwerk
OEC	Ouest Electronique Connect.
OHMIC	Ohmic
OLIBO	Olibol
OMRON	Omron
OPELC	Opelec
ORBIT	Orbitec
OREGA	Oréga
OREOR	Oreor
OSRAM	Osram
OTALU	Otalu
PAGNO	Pagnon et Cie
PANDU	Pandu
PASI	Pasi Relais
PAUL	Paul (Maison du caoutchouc)
PAULS	Paulstra
PEREN	Perena
PERMA	Permali
PERRI	Perrière
PHILI	Philips
PI	P.I Condensateurs
PICCE	Piccette
PIHER	Piher
PINET	Pinet Léon
PLAST	Plastic
PLESS	Plessey-France
PMI	Précision Monolithics Inc.
POBRU	Potter et Brumfield
POLAR	Polaroid
POLYC	Polycinétique
PORTE	Portescap France
PRECI	Précis
PREH	PREH
PROCH	Prochal
PROLA	Prolabo
PRONR	Proner
PROTO	Sté Proteaux
PRUOM	Prud'homme et Fils
PYRAL	Pyral
Q-E	Quartz et Electronique
RADIA	Radiall
RADIO	Radiohm
RAFI	Rafi
RAPID	Rapid S.A.
RAUFI	Raufilam
RAYCH	Raychem
RAYMO	Raymond
RCA	R.C.A.
RECOR	Record
RES	Radio-Electro Sélection
RESIS	Resista
REXOR	Rexor
RHODA	Rhodanienne
RHPOU	Rhone Poulenc
RHPRO	Rhone Progil
RICHC	Richco
RIFA	Rifa
RITZ	Ritz
RMB	RMB
RN	Robinson Nugent Europe
ROE	Roederstein
ROJAC	Rojac
ROSEN	Rosenthal
ROSS	Milton Ross
ROTRO	Rotron
RTC	Radiotechnique Compelec
RUBAN	Le Ruban adhésif
RUBYC	Rubycon
RUSSN	Russenberger
RUWID	Ruwido
S.M.I	S.M.I
SABIR	Sabir
SADAR	Sadar
SAE	Stauford Applied Engineering
SAFT	Saft
SAGOT	Sagot Nicollier
SAM	Forges Stéphanoises
SANDV	Sandvik France
SANEL	Sanel
SAPE	S.A.P.E
SAREL	SAREL
SCH-M	Schlumberger Montrouge
SCHAD	Schadow-Rudolph
SCHAF	Schaffner
SCHUR	Schurter
SDS	SDS
SEALE	Sealectro
SECME	Secme
SECRE	Secre
SEEM	Seem
SEFRA	Sefram
SEG	Solartron
SEGOR	Segor
SERFL	Serflex
SERME	SERM
SES	Ses. Sterling
SESCO	Seasonem
SEUFF	Seuffer
SFERN	Sfernice
SFMI	SFMI Crouzet
SGS	S.G.S
SHIPL	Shipley
SHUGA	Shugart
SI-GE	Silicon Général
SIAM	Siam
SIC	Sic-Safco
SID	Sider
SIDCO	Sidco
SIEME	Siemens
SIEML	Siemelec
SIEMS	Siemens
SIGMA	Sigma instruments inc.
SIGNE	Signetics
SILEC	Silec
SILIC	Siliconix
SIMMO	Simmonds
SINAP	Sinaplast
SINCO	Sincora-Chimie
SINTR	Sintra
SIS	Schlumberger
SIT	SIT
SITEC	SITEC
SKEGA	Skega
SNFA	SNFA
SOCAP	Socapex
SODIL	Sadilec
SODIM	Sodim
SODIS	Sodistrel
SOGIE	Sogie
SOPRA	Sopralor
SOUDU	Soudupin
SOULA	Soulat-Frères
SOURI	Sourlau et Cie
SOVCO	Sovcor
SPCE	S.P.C.E
SPECT	Spectrol
SPRAG	Sprague
SRATI	Srati
STAIN	Stainless
STANW	Stanwick
STATE	State of the art inc.
STAUB	Staubli
STETT	Stettner
STGUM	Standard Gum
STOCK	Stockli
SUHNE	Suhner
SWAGE	Swage
SWITC	Switchcraft
SYGMA	Sygma
SYLVA	Sylvania
TA	Tekelec-Airtronic
TCEI	TCEI
TCK	Transrack
TECO	TECO
TEL-L	Tel-Labo
TELED	Télédyne
TELEM	Télémécanique
TELON	Télonic
TEROS	Teroson
TERRO	Terrop
TESA	Tesa
TEXAS	Texas Instruments
TEXMO	Texmo
TEXTO	Textool
TH-PA	Thorn-Panelgrapic
THERM	Thermalloy
THOMA	Thomas
TO-PE	Tole perforée de Maubeuge
TOLKI	Tolkit
TOSHI	Toshiba
TOURA	Toural
TRANM	Transmondial
TREFI	Tréfimétaux Berylco
TRELC	Trélec
TRW	TRW
UDD	UDD-FIM
UGINE	Ugine Kuhlmann
UMBRA	Umbrako
UMD	Usine Métallurgique Doloise
UNIRO	Uniroyal
VAC	VAC
VARO	Varo semi-conductor
VEITH	Veith
VERNE	Verneret
VIBRA	Vibrachoc
VIENO	Viennot
VIGNO	Vignon Choquit
VIRAX	Virax
VISHA	Vishay Micromesures
VITRA	Vitramon
VOGT	Vogt Bauteile
VOLTR	Voltronics
VRN	VRN (= TRW)
WAKEF	Wakefield Engineering
WALBE	Walbern Devices
WARNR	Warner France
WATER	Waterman
WEBER	Weber
WECO	Weco
WELLR	Weller
WICKM	Wickmann
WIMA	Wima
WIRT	Continental Wirt
WONDR	Wonder
WYSS	Wyss René
ZIEHL	Ziehl
ZILOG	Zilog

7 5277 0020 Accessoires

COMPOSANT NO ARTICLE	COMPOSANT DESIGNATION
253007001	CABLE ACCES CAVALIER DE REPERAGE SES-- 623-003-A
253007002	CABLE ACCES CAVALIER DE REPERAGE SES-- 623-003-B
253007003	CABLE ACCES CAVALIER DE REPERAGE SES-- 623-003-C
309103016	VIS C M 3 X16 ACIER INOX N6003 NF-E27-115
752200015	NOMEN COUVERCLE DE PROTECTION
752270021	NOMEN OPTION PRISE ALIM SONDE 5227
752270025	NOMEN OPTION COMPTEUR HORAIRE
863541002	PARE SOLEIL VISIERE 8X10
879900043	VALISE OSCILLOSCOPE
950065010	SONDE 150 MHZ, 1/10, 2M. 50065S COLIN 2P150 " S "
953203000	NOMEN SACOCHE 53203
752280054	CORDON SECTEUR VERSION EUROPE
752280055	CORDON SECTEUR VERSION ANGLAISE

7 5277 0021 Option : prise d'alimentation sonde active

REPERE TOPO.	COMPOSANT NO ARTICLE	COMPOSANT DESIGNATION
	214447439	CONNEC CARRE FIC FEM 1C SERT MINI PV BERG- 47649
	233500200	CABLE ORDIN 1C S 0,34 1,3 BLAN FILOT EPDF00
	300120032	CABLA COSSE SOUDER 1 DIR LAITN ETAME MFOM- 2003C
	300500010	CABLA LIEN BANDE 2,4 92 NYLON BLAN THOMA TYB23M
	889504051	CONNEC BOIT 5 ALVEOLES PRIS DANS 2144 50391
	899200284	PLAN DE CABLAGE PRISE LEMO 5220-24-27-77
C 2001	149321002	CAP10000 PF-20+100 63V CERAM 2 NO242
C 2002	149321002	CAP10000 PF-20+100 63V CERAM 2 NO242
J 201	213600016	CONNEC ROND EMBAS HER 4C SOUD JUPIT RA 0 M 4

ENERTEC
Schlumberger

NOMENCLATURE 5277

7 5277 0050 Habillage

COMPOSANT NO ARTICLE	COMPOSANT DESIGNATION
301100055	RIVET CREUX ROULE 7,3 5,5X 4 LAITN MEOM- C55X4
301240070	RIVET AVEUG CP 4 X 7,6 ACIER ZING N6631 1821 0511 BRIV
301248101	RIVET AVEUG 4,8X10,5 ALU AVDEL 5141-0627 DRIVE
304004080	RONDEL PLAT 4,2X 8 X 0,5 LAITN NICK MEOM- 5
304004121	RONDEL PLAT 4,2X12 X 1 ACIER NICK MEOM- 10F
304005110	RONDEL PLAT 5,2X10 X 1 ACIER NICK MEOM- 8 C
304008150	RONDEL PLAT 8,5X15 X 0,5 ACIER NICK MEOM- 23
304353083	RONDEL ONDUF 8,1X13,8X 0,2 ACIER CARB NOMEL 530803 00
310504010	VIS F / 90HC M 4 X10 ACIER N6063 NF-E27-160
310504012	VIS F / 90HC M 4 X12 ACIER N6063 NF-E27-160
314602015	PIED ROND 20 15 PVC NOIR VIS FAISA 20-15
835041023	COUVERCLE DE POIGNEE SERIE OSCILLOS PORTABLE
835041024	COUVERCLE 5032
840014001	ECROU SERTI TRAITEMENT M3 16/10 H=3
845014001	ENTRETOISE DE POIGNEE 5221
862534039	AXE DE POIGNEE SERIE OSCILLOS PORTABLE
867522098	PLAQUETTE RENFORT 5032
867522460	PLAQUETTE RENFORT 5220-24
869022022MG	POIGNEE 5224
869041020	POIGNEE 5032
869514011	BAGUE DE POIGNEE 5221
887222108	CAPOT SUPERIEUR 5224
887222109	CAPOT INFERIEUR 5224

7 5277 0051 Equipement avant

REPERE TOPO.	COMPOSANT NO ARTICLE	COMPOSANT DESIGNATION
	215506001	CONNEC ROND EMBAS FEM 1C SOUD BANAN 4 ROUG HIRSC 930176-101 BIL 20
	215506400	CONNEC ROND EMBAS FEM 1C SOUD TEST 4 JEANR 640
	304002050	RONDEL PLAT 2,6X 5 X 0,5 LAITN NICK MEOM- 1C
	304306010	RONDEL DENTS DE 6 X11,3X 0,7 ACIER INOX N6333 NF-E27-618
	309102506	VIS C M 2,5X 6 ACIER INOX N6003 NF-E27-115
	313922106	VIS CBL POZ 2,2X 6 AUTO*ACMXC ZN6 PB GOBIN PLAS TCBL POZ N2X6*
	834524005MG	COLONNETTE SUPPORT DE CI AFFICHAGE 5224
	863044002	PASSE FIL ISOLANT POUR AXE DE 6
	869544022	CANON POUR AXE DIAMETRE 4M/M
J 0601	215541031	CONNEC ROND EMBAS FEM 1C SOUD TEST 2 ARNOU PBR0401031
J 1501	213206250	CONNEC COAX EMBAS FEM 1C SOUD BNC RADIA R 141554- UG 625B/U

7 5277 0053 Equipement de platine

COMPOSANT NO ARTICLE	COMPOSANT DESIGNATION
219614516	BOUTON ACCESS CAPUCH 14,5 GRIS CLAIR
	AKA-- W1-301
219614590	BOUTON ACCESS CAPUCH 10 GRIS
	AKA-- W1-201
219614592	BOUTON ACCESS CAPUCH 10 ROUG
	AKA-- W1-203
219621231	BOUTON REPERE 4 10 PINCE GRIS CLAIR
	AKA-- R2-231
219621344	BOUTON REPERE 6 15 PINCE GRIS TR 4,2
	AKA-- R2-341-02
219621351	BOUTON REPERE 6,35 14,5 PINCE GRIS CLAIR
	AKA-- R2-351-01
219623231	BOUTON ORE+RE 4 10 PINCE GRIS
	AKA-- R4-231
309104010	VIS C M 4 X10 ACIER INOX
	N6003 NF-E27-115
345074020	COLONE ROND 8 X 2 4,3 LAITN NICK
	ACME- ELL4380-02
752120500	(1) NOMEN BOUTON B DE T 5212
752770051	NOMEN EQUIPEMENT AVANT 5277
859541005	NEUTRAL POUR TUBE 8X10 STANDARD
877541007	CACHE AV DE TUBE 8X10 NOIR SATINE

Platines sérigraphiées

866700144	PLATINE Y PERSONNALISATION	5277
866700167	PLATINE X VERS.FRANCAISE PERSONNAL.	5277
866700168	PLATINE SYNCHRO VERS.FRAN.PERSONNALISEE	5277
866700171	PLATINE Y VERS.ANGLAISE PERSONNAL.	5277
866700184	PLATINE X VERS.ANGLAISE PERSONNALISAT.	5277
866700185	(1) PLATINE SYNCH. ANGLAISE PERSONNALISAT.	5277
867509213	PLAQUETTE LOGO MARQUAGE FRANCAIS	5277
867509214	PLAQUETTE LOGO MARQUAGE ANGLAIS	5277
867522463	PLAQUETTE SUPPORT POUR PLAQUE SIGNALET.	5277

7 5277 0300

Sous-ensemble bloc alimentation

COMPOSANT NO ARTICLE	INDICE MODIF	COMPOSANT DESIGNATION
220000631	00	FUSIBLE RETARD 0,63A 5 X 20 CEHES DITD/0,63
220001003	00	FUSIBLE RETARD 1 A 6,3X 31,7 CEHES D8TD/1
300100051		CABLA COSSE SOUDER 1 DIR LAITN ETAMé MFOM- 5C
300100061		CABLA COSSE SOUDER 2 DIR LAITN ETAMé MFOM- 6B
301224480	00	RIVET AVEUG CP 2,4X 4,8 ALU AU3G N6611 1131-0306 CHOBERT
304003050		RONDEL PLAT 3,2X 5 X 0,5 LAITN NICK MFOM- 1D
304003071		RONDEL PLAT 3,2X 7 X 1 ACIER NICK MFOM- 2D
304004121	01	RONDEL PLAT 4,2X12 X 1 ACIER NICK MFOM- 10F
304302510	00	RONDEL DENTS DE 2,5X 5,5X 0,3 ACIER INOX N6333 NF-E27-618
304302516	00	RONDEL DENTS DE 2,5X 5,5X 0,3 ACIER INOX N6333 NF-E27-618
304303010		RONDEL DENTS DE 3 X 6 X 0,4 ACIER INOX N6333 NF-E27-618
304303040	00	RONDEL DENT EDI 3,2X 8,7X 0,5 CUPRO BERYL NOMEL 21030170
304304010	04	RONDEL DENTS DE 4 X 8,2X 0,5 ACIER INOX N6333 NF-E27-618
309102510		VIS C M 2,5X10 ACIER INOX N6003 NF-E27-115
309102510		VIS C M 2,5X10 ACIER INOX N6003 NF-E27-115
309103004		VIS C M 3 X 4 ACIER INOX N6003 NF-E27-115
309103006		VIS C M 3 X 6 ACIER INOX N6003 NF-E27-115
309103008		VIS C M 3 X 8 ACIER INOX N6003 NF-E27-115
309103012		VIS C M 3 X12 ACIER INOX N6003 NF-E27-115
309103016		VIS C M 3 X16 ACIER INOX N6003 NF-E27-115
309104025		VIS C M 4 X25 ACIER INOX N6003 NF-E27-115
309203004		VIS F / 90 M 3 X 4 ACIER INOX N6023 NF-E27-113
309203006		VIS F / 90 M 3 X 6 ACIER INOX N6023 NF-E27-113
309303004	00	VIS F /120 M 3 X 4 ACIER INOX N6024
310000250		ECROU H M 2,5 ACIER INOX N6203 NF-E27-411

REPERE TOPO.	COMPOSANT NO ARTICLE	INDICE MODIF	COMPOSANT DESIGNATION
	310000250		ECROU H M 2,5 ACIER INOX N6203 NF-E27-411
	310000300		ECROU H M 3 ACIER INOX N6203 NF-E27-411
	310000400		ECROU H M 4 ACIER INOX N6203 NF-E27-411
	313922106	00	VIS CBL POZ 2,2X 6 AUTO*ACMXC ZN6 PB GOBIN PLAS TCBL POZ N2X6*
	330032628	02	CABLA BOUCHE TROU 9,25 POLYETH NOIR RAYMO 52198-750921
	752241041	00	NOMEN CI Z6 5224
	752771242	00	NOMEN CI Z10 COMMANDE MEMOIRE
	752771251	00	NOMEN CI Z9 MEMOIRE
	752778021	00	NOMEN CI Z1 ALIM.
	864241002	00	PIEDS STANDARD OSCILLOS PORTABLES
	867022058	00	PLAQUETTE SIGNALETIQUE VERSION ENERTEC
	867022196		ETIQUETTE (25X38) LISTE TELEPHONE AGENCE SAV
	867522484	00	PLAQUETTE OBTURATRICE COMPTEUR HORAIRE 5216
	868708040	00	SERIGRAPHIE PLATINE ARRIERE 5277
	875022007	00	PROTECTEUR SECTEUR 5228
	875044028	00	PROTECTEUR DE PEIGNES 5277
	876024042	00	RADIATEUR ARRIERE 5277
	876500002	00	BUTEE CAOUTCHOUC TRAITEMENT 5276
	898000005	00	REPARTITEUR SECTEUR SHAFFNER FN370-4/21 4 T.
CR2001	200534001	00	DIOD PONT *KBPC 604 * 400V 6 A GI---
CR2002	200534001	00	DIOD PONT *KBPC 604 * 400V 6 A GI---
J 0301	213206250	00	CONNEC COAX EMBAS FEM 1C SOUD BNC RADIA R 141554- UG 625B/U
J 1901	213206250	00	CONNEC COAX EMBAS FEM 1C SOUD BNC RADIA R 141554- UG 625B/U
J 2001	213206250	00	CONNEC COAX EMBAS FEM 1C SOUD BNC RADIA R 141554- UG 625B/U

7 5277 0400 — Tube cathodique

COMPOSANT NO ARTICLE	COMPOSANT DESIGNATION
890304001	TUB MEM IC RECT 115MM P31 GRAT SANS CULOT CSF-- TH8911 - CAHIER DES CHARGES -
214429001	CONNEC LIMAND ACCES CONTACT A SERTIR 18 A 24 MOLEX 08-50-0189-6838-901L
214429008	CONNEC LIMAND ACCES CONTACT A SERTIR 22 A 26 MOLEX 08-50-0185 7258-901L
214429062	CONNEC LIMAND ACCES BOITIER 6C SS POL MOLEX 09-91-0600 3069-6
214429101	CONNEC LIMAND ACCES BOITIER 10C SS POL MOLEX 09-91-1000 3069-10
214429901	CONNEC LIMAND ACCES CLE DE POLARISATION MOLEX 15-04-0219 2560-1
253507450	PASFIL ANNEAU 6,1 1,6 POLYE MFOM- 745
300500010	CABLA LIEN BANDE 2,4 92 NYLON BLAN THOMA TYB23M
304303040	RONDEL DENT LOI 3,2X 8,7X 0,5 CUPRO BERYL NOMEL 21030170
304304010	RONDEL DENTS DE 4 X 8,2X 0,5 ACIER INOX N6333 NF-E27-618
309203006	VIS F / 90 M 3 X 6 ACIER INOX N6023 NF-E27-113
309603006	VIS HC M 3 X 6 CUV ACIER N6073 NF-E27-162
309704016	VIS CHC M 4 X16 ACIER N6053 NF-E27-161
310000300	ECROU H M 3 ACIER INOX N6203 NF-E27-411
310000400	ECROU H M 4 ACIER INOX N6203 NF-E27-411
373000015	PASFIL BANDE PLIOBORD 1,5 PE-BD NATU SES-- DX 1,5 C
565504015	ADHESIF RUBAN 1FACE 12,5X6,35 POLYU NOIR 3M--- 4304
652770071	SPECIF COMMENTAIRE TUBE CATHODIQUE 5277
702180010	NOMEN ECLAIRAGE TUBE 8X10 5277 AMP.50/60 MA
871512014	BLINDAGE TUBE PARTIE AR
871512042	BLINDAGE DE TUBE 5277
873077001	PROFILE CAOUT PAUL-
899009321	MONTAGE COLLAGE MANCHON CAOUTCHOUC 5272

7 0218 0010 — Eclairage de tube

COMPOSANT NO ARTICLE	COMPOSANT DESIGNATION
201500502	VOYANT AMPOUL FILA 5V FIL 60 MA TUBE SIEML 583
302015250	OEILLET 3 1,5X 2,5 LAITN NICKL MFOM- 1525L
302031450	OEILLET 5,8 3 X 5 LAITN NICKL MFOM- 3050
700200701	RECAPITULATIF CI ECLAIRAGE DE TUBE STANDARD
839512001	SUPPORT ECLAIRAGE TUBE
839541002	ECLAIRAGE DE TUBE CEFIL
899000044	PLAN DE MONTAGE ECLAIRAGE DE TUBE 5277

7 5277 0500 Raccordement électrique et mécanique

COMPOSANT NO ARTICLE	COMPOSANT DESIGNATION
214422061	CONNEC CI IMP EMB MAL 6C PICO 396 MOLEX 09-57-1065 A2220-6A
214422101	CONNEC CI IMP EMB MAL 10C PICO 396 MOLEX 09-57-1105 A2220-10A
253500201	PASFIL OBLONG 33 X19 PVC GRIS SES-- 135-001
301100040	RIVET CREUX ROUL 5,8 4 X 4 LAITN MFOM- C40X4
301282106	RIVET AVEUG CP 3,2X 5,2 ACIER ZING N6631 1821 0406 BRIV
304003060	RONDEL PLAT 3,2X 6 X 0,5 LAITN NICK MFOM- 1
304004080	RONDEL PLAT 4,2X 8 X 0,5 LAITN NICK MFOM- 5
304004100	RONDEL PLAT 4,2X10 X 0,5 LAITN NICK MFOM- 8
304303010	RONDEL DENTS DE 3 X 6 X 0,4 ACIER INOX N6333 NF-E27-618
304303040	RONDEL DENT LDI 3,2X 8,7X 0,5 CUPRO BERYL NOMEL 21030170
304304010	RONDEL DENTS DE 4 X 8,2X 0,5 ACIER INOX N6333 NF-E27-618
304304040	RONDEL DENT LDI 4 X11,2X 0,6 ACIER CDPB NOMEL 21040112
304322032	RONDEL ONDUL 3,2X 6 X 0,4 CUPRO BERRYL NOMEL B-52030170
308003006	VIS C M 3 X 6 PLAST
309103006	VIS C M 3 X 6 ACIER INOX N6003 NF-E27-115
309103008	VIS C M 3 X 8 ACIER INOX N6003 NF-E27-115
309104008	VIS C M 4 X 8 ACIER INOX N6003 NF-E27-115
309104010	VIS C M 4 X10 ACIER INOX N6003 NF-E27-115
309203008	VIS F / 90 M 3 X 8 ACIER INOX N6023 NF-E27-113
309303006	VIS F /120 M 3 X 6 ACIER INOX N6024
309404010	VIS H M 4 X10 ACIER INOX N6043 NF-E27-311
310000300	ECROU H M 3 ACIER INOX N6203 NF-E27-411
313406250	ECROU SERTI M 2,5 1,5 ET + ACIER CADM OTALU RC 3330- 0250002
313408400	ECROU INSERT M 4 LAITN ETAME ERFI- 01003S
345083120	ENTRET HEXA 5,5X12 M 3 LAITN NICK N6718

COMPOSANT NO ARTICLE	COMPOSANT DESIGNATION
345083300	ENTRET HEXA 5,5X30 M 3 LAITN NICK N6718
345093300	PILIER HEXA 5 X30 M 3 LAITN NICK N6708
373000015	PASFIL BANDE PLIOBORD 1,5 PE-BD NATU SES-- DX 1,5 C
752771032	NOMEN CI Z8 -5277
831134001	CENTRAGE PAR VERRIN PIONS
832222041	CHASSIS PRINCIPAL 5277
832222042	CHASSIS SUPPORT DE BLINDAGE 5277
840014001	ECROU SERTI TRAITEMENT M3 16/10 H=3
840014001	ECROU SERTI TRAITEMENT M3 16/10 H=3
840014002	ECROU SERTI TRAITEMENT M3 20/10 H=3
840014004	ECROU SERTI M3 TRAITEMENT 10/10 H=3
840014006	ECROU SERTI TRAITEMENT M4 16/10 H=3MM
841022146MG	EQUERRE DE MISE A LA MASSE PLAT.X 5224
841022147MG	EQUERRE BLINDAGE COTE X 5224
841022159	EQUERRE BLINDAGE CI Y 5277
841022164	EQUERRE SUPPORT DE CONNECT MOLEX
841112074	EQUERRE SUPPORT DE CIRCUIT ALIM 5277
845044015MG	ENTRETOISE DE FIXATION CI PA 5224
845104017MG	ENTRETOISE 5277
867022050	PLAQUETTE AUTO COLLANTE THT 5212B
867522434	PLAQUETTE DE PROTECTION CI PA
867552027	PLAQUETTE DE PROTECTION PA 5277
868209005	CADRE AVANT MODIF 5277
877112020	RESSORT DE MISE A LA MASSE 5277
877132001	RESSORT LAME
887309016	CAPOT PROTECTEUR CULOT DE TUBE 5277

7 5277 8021 Circuit Z1 - Carte alimentation

COMPOSANT NO ARTICLE	COMPOSANT DESIGNATION
200240300	SUPP 8C DIL 8 SOUD CU-AL ETAME N2500
200241400	SUPP 14C DIL 14 SOUD CU-AL ETAME N2500
200241600	SUPP 16C DIL 16 SOUD CU-AL ETAME N2500
200241605	SUPP 16C DIL 16 SOUD CU AL OR UMD-A 4C 590 03
200250101	RADIAT ACCES MICA RECT B 23 TO 126 TO 220 SODIS SA 2030
202290102	ACCU ACCES SUPPORT 9V KEYST 1291
214429001	CONNEC LIMAND ACCES CONTACT A SERTIR 18 A 24 MOLEX 08-50-0189-6838-901L
214429008	CONNEC LIMAND ACCES CONTACT A SERTIR 22 A 26 MOLEX 08-50-0185 7258-901L
214433101	CABLA EMBOUT CABLE CI IMP HOR 508 RAYCH B 046-66- 5,08
214447330	CONNEC CI IMP EMB MAL 1C POST BERG- 47310
214447331	CONNEC CI IMP EMB MAL 1C POST BERG- 47311
214447439	CONNEC CARRE FIC FEM 1C SERT MINI PV BERG- 47649
220000631	FUSIBLE RETARD 0,63A 5 X 20 CEHES D LTD
227022013	BUS-BAR CI IMP V 1C 15,24 8BR PICO MEKTR M824-07-6
227026008	BUS-BAR CI IMP H 2C 22,86 5CI 17,78 PICO MEKTR M822-4-9-7
227026009	BUS-BAR CI IMP H 2C 20,32 3CI 15,24 PICO MEKTR M822-2-8-6
233500200	CABLE ORDIN 1C S 0,34 1,3 BLAN FILOT EPDF00
238502000	CABLE ORDIN 1C S 0,60 2,5 BLAN MAREU ELECTROAIR N1 19X0,2
240200003	CABLE COAX 1C 50OHM 2,5 100 PF/M FILOT KX3 B
240200022	CABLE COAX 1C 50OHM 2,5 95 PF/M FILOT KX22A
243892501	CABLA JUMPER 25C PAS 2,54 L 50,8 NOMEX ANSLE FSN-22A-25
263442870	CI INT LOG LSI*N 82S129 *PROM DIL 16 RTC--
300101290	CABLA COSSE CI IMP PICO 2,8 LAITN ETAME LOUPO E 129/5
300171320	CABLA COSSE CLIPS SERTI 2,8 LAITN ETAME AMP-- 140 719 2
300500130	CABLA LIEN BANDE 4,8 196 NYLON BLAN THOMA TY25M

COMPOSANT NO ARTICLE	COMPOSANT DESIGNATION
301100304	RIVET CREUX ROUL 4,6 3 X 4 LAITN MFOM- C30X4
304303011	RONDEL ONDUF 3,2X 6,2X 0,4 ACIER BRUN H NOMEL B520301-00
310000300	ECROU H M 3 ACIER INOX N6203 NF-E27-411
313406250	ECROU SERTI M 2,5 1,5 ET * ACIER CADM OTALU RC 3330- 0250002
313406250	ECROU SERTI M 2,5 1,5 ET * ACIER CADM OTALU RC 3330- 0250002
345083150	ENTRET HEXA 5 X15 M 3 LAITN NICK N6718 ETL3055-15
565504015	ADHESIF RUBAN 1FACE 12,5X6,35 POLYU NOIR 3M--- 4304
652770070	SPECIF COMMENTAIRE CI Z1 5277
652770802	SCHEMA ELEC CI Z1 ALIM BASE TENSION 5277
652770803	SCHEMA ELEC THT AMPLI ALLUMAGE 5277
652770804	SCHEMA ELEC COMMANDES 5277
652770805	SCHEMA ELEC LOGIQUE 5277
652770806	SCHEMA ELEC LOGIQUE Y 5277
652770807	SCHEMA ELEC LOGIQUE SYNCHRO 5277
652770808	SCHEMA ELEC MEMOIRE 1 5277
652770809	SCHEMA ELEC AMPLI SYNCHRO B1 B2 5277
652770824	SCHEMA ELEC MEMOIRE 2 5277
690152200	LISTING PROGRAMMATION DISQUETTE 5220
752770711	RECAP CI Z 1 ALIM 5277
840014001	ECROU SERTI TRAITEMENT M3 16/10 H=3
841032045	EQUERRE RADIATEUR DE TRANSISTORS 5277
841132041	EQUERRE BLINDAGE CI ALIM 5277
857034001	PILIER PLOT DE CABLAGE
867524458	PLAQUETTE SUPPORT DE TRANSISTORS 5277
879144011	RONDELLE ISOLANTE POUR TRANSISTOR STANDARD

7 5277 8021 Circuit Z1 - Carte alimentation

REPERE TOPO.	COMPOSANT NO ARTICLE	COMPOSANT DESIGNATION
	889504049	CONNEC BOIT 3 ALVEOLES PRIS DANS 2144 50391
BT0001	202200901	PILE 9 V 0,52AH 6F22 ALCALINE/MANGANESE MALLO MN 1604
C 0001	158221049	CAP 100 MF-10+50 100V CHIMIC SIC-- CMF-FP
C 0002	149211001	CAP 1000 PF 10 % 500V CERAM 2 N0243
C 0003	158224749	CAP 470 MF-10+50 100V CHIMIC SIC-- CMF-FP
C 0004	149104701	CAP 47 PF 5 % 500V CERAM 1 N0246
C 0005	170541001	CAP 1 MF 10 % 250V POLYEST N0263
C 0006	158234719	CAP 4700 MF-10+50 25V CHIMIC SIC-- CMF-FP
C 0007	156809047	CAP 47 MF-10+50 10V CHIMIC RAD 508 N0220
C 0008	149510475	CAP 470 PF 10 % 63V CERAM 2 N0242
C 0009	145501410	CAP 0,1 MF-20+80 25V CERAM 3 RAD 508 LCC-- GFO 611 UB
C 0010	156825047	CAP 47 MF-10+50 35V CHIMIC RAD 508 N0220
C 0011	145501410	CAP 0,1 MF-20+80 25V CERAM 3 RAD 508 LCC-- GFO 611 UB
C 0012	156826010	CAP 10 MF-10+50 35V CHIMIC RAD 508 N0220
C 0013	157841507	CAP15000 MF-10/50 10V CHIMIC SIC-- CO 33
C 0014	149321002	CAP10000 PF-20+100 63V CERAM 2 N0242
C 0015	156809047	CAP 47 MF-10+50 10V CHIMIC RAD 508 N0220
C 0016	156826010	CAP 10 MF-10+50 35V CHIMIC RAD 508 N0220
C 0017	149104701	CAP 47 PF 5 % 500V CERAM 1 N0246
C 0018	145501410	CAP 0,1 MF-20+80 25V CERAM 3 RAD 508 LCC-- GFO 611 UB
C 0019	170521001	CAP10000 PF 20 % 250V POLYEST N0263
C 0020	156837048	CAP 47 MF 20 % 63V CHIMIC RAD-55+110 N-CHE KX35VB47M
C 0021	145501410	CAP 0,1 MF-20+80 25V CERAM 3 RAD 508 LCC-- GFO 611 UB
C 0022	149324701	CAP47000 PF-20+80 63V CERAM 2 N0242 02
C 0023	170531002	CAP 0,1 MF 10 % 250V POLYEST N0263

REPERE TOPO.	COMPOSANT NO ARTICLE	INDICE MODIF	COMPOSANT DESIGNATION
C 0024	188304310		CAP10000 PF 20 % 2200V POLYEST RAD EUROF BI73R
C 0025	188304310		CAP10000 PF 20 % 2200V POLYEST RAD EUROF BI73R
C 0026	147734068		CAP 68 PF 10 % 3000V CERAM 1 LCC-- QCU 615
C 0027	188304322		CAP22000 PF 20 % 2200V POLYEST RAD EUROF BI73R
C 0028	149210101		CAP 100 PF 10 % 500V CERAM 2 N0243
C 0029	170531002		CAP 0,1 MF 10 % 250V POLYEST N0263
C 0030	147735147		CAP 470 PF-20+50 3000V CERAM 2 LCC-- QCX 608
C 0031	188304310		CAP10000 PF 20 % 2200V POLYEST RAD EUROF BI73R
C 0032	145501410		CAP 0,1 MF-20+80 25V CERAM 3 RAD 508 LCC-- GFO 611 UB
C 0033	147411006		CAP 1000 PF 20 % 3000V CERAM 2 RAD 1016 LCC-- QCW 611
C 0034	176505410		CAP 0,1 MF 10 % 250V POLYEST RAD 100 SIEMS B32511-D3104-K
C 0035	149000105		CAP 1 PF+-0,25P 63V CERAM 1 508 N0245
C 0036	176505410		CAP 0,1 MF 10 % 250V POLYEST RAD 100 SIEMS B32511-D3104-K
C 0037	170521001		CAP10000 PF 20 % 250V POLYEST N0263
C 0038	156808047		CAP 47 MF-10+50 10V CHIMIC RAD 508 N0220
C 0039	188304310		CAP10000 PF 20 % 2200V POLYEST RAD EUROF BI73R
C 0040	145501410		CAP 0,1 MF-20+80 25V CERAM 3 RAD 508 LCC-- GFO 611 UB
C 0041	145501410		CAP 0,1 MF-20+80 25V CERAM 3 RAD 508 LCC-- GFO 611 UB
C 0042	149321002		CAP10000 PF-20+100 63V CERAM 2 N0242
C 0043	149321002		CAP10000 PF-20+100 63V CERAM 2 N0242
C 0044	149321002		CAP10000 PF-20+100 63V CERAM 2 N0242
C 0045	149321002		CAP10000 PF-20+100 63V CERAM 2 N0242
C 0046	149321002		CAP10000 PF-20+100 63V CERAM 2 N0242
C 0047	149321002		CAP10000 PF-20+100 63V CERAM 2 N0242
C 0048	149321002		CAP10000 PF-20+100 63V CERAM 2 N0242

7 5277 8021 Circuit Z1 - Carte alimentation

REPERE TOPO.	COMPOSANT NO ARTICLE	COMPOSANT DESIGNATION
C 0049	156826010	CAP 10 MF-10+50 35V CHIMIC RAD 508 NO220
C 0050	149002205	CAP 22 PF 5 % 63V CERAM 1 508 NO245
C 0051	149511005	CAP 1000 PF 10 % 63V CERAM 2 NO242
C 0052	156838910	CAP 1 MF-10+50 63V CHIMIC RAD 254 ITT-- EN 12-35-X
C 0053	149321002	CAP10000 PF-20+100 63V CERAM 2 NO242
C 0054	156826010	CAP 10 MF-10+50 35V CHIMIC RAD 508 NO220
C 0055	156826010	CAP 10 MF-10+50 35V CHIMIC RAD 508 NO220
C 0056	156808047	CAP 47 MF-10+50 10V CHIMIC RAD 508 NO220
C 0057	149001205	CAP 12 PF 5 % 63V CERAM 1 508 NO245
C 0058	149010221	CAP 220 PF 5 % 63V CERAM 1 508 NO245
C 0059	149010331	CAP 330 PF 5 % 63V CERAM 1 508 NO245
C 0060	149211201	CAP 1200 PF 10 % 500V CERAM 2 NO243
C 0061	156808047	CAP 47 MF-10+50 10V CHIMIC RAD 508 NO220
C 0062	149321002	CAP10000 PF-20+100 63V CERAM 2 NO242
C 0063	149321002	CAP10000 PF-20+100 63V CERAM 2 NO242
C 0064	149321002	CAP10000 PF-20+100 63V CERAM 2 NO242
C 0065	149321002	CAP10000 PF-20+100 63V CERAM 2 NO242
C 0066	156808047	CAP 47 MF-10+50 10V CHIMIC RAD 508 NO220
C 0067	149321002	CAP10000 PF-20+100 63V CERAM 2 NO242
C 0068	149000225	CAP 2,2 PF+-0,25P 63V CERAM 1 508 NO245
C 0069	145501410	CAP 0,1 MF-20+80 25V CERAM 3 RAD 508 LCC-- GFO 611 UB
C 0070	156826010	CAP 10 MF-10+50 35V CHIMIC RAD 508 NO220
C 0071	188270422	CAP 0,22 MF 20% 630V POLYEST RAD 2250 EUROF BR7
C 0072	145501410	CAP 0,1 MF-20+80 25V CERAM 3 RAD 508 LCC-- GFO 611 UB
C 0073	188270422	CAP 0,22 MF 20% 630V POLYEST RAD 2250 EUROF BR7

REPERE TOPO.	COMPOSANT NO ARTICLE	COMPOSANT DESIGNATION
C 0074	147736147	CAP 470 PF-20+50 3000V CERAM 2 LCC-- QCX 608
C 0075	149000825	CAP 8,2 PF+-0,25P 63V CERAM 1 508 NO245
C 0076	145501410	CAP 0,1 MF-20+80 25V CERAM 3 RAD 508 LCC-- GFO 611 UB
C 0077	149321002	CAP10000 PF-20+100 63V CERAM 2 NO242
C 0078	149321002	CAP10000 PF-20+100 63V CERAM 2 NO242
C 0079	149010221	CAP 220 PF 5 % 63V CERAM 1 508 NO245
C 0080	149001805	CAP 18 PF 5 % 63V CERAM 1 508 NO245
C 0081	149000335	CAP 3,3 PF+-0,25P 63V CERAM 1 508 NO245
C 0082	149321002	CAP10000 PF-20+100 63V CERAM 2 NO242
C 0083	149321002	CAP10000 PF-20+100 63V CERAM 2 NO242
C 0084	149321002	CAP10000 PF-20+100 63V CERAM 2 NO242
C 0085	149321002	CAP10000 PF-20+100 63V CERAM 2 NO242
C 0086	149321002	CAP10000 PF-20+100 63V CERAM 2 NO242
C 0087	156808047	CAP 47 MF-10+50 10V CHIMIC RAD 508 NO220
C 0088	156826010	CAP 10 MF-10+50 35V CHIMIC RAD 508 NO220
C 0089	149511005	CAP 1000 PF 10 % 63V CERAM 2 NO242
C 0090	149321002	CAP10000 PF-20+100 63V CERAM 2 NO242
C 0091	149211001	CAP 1000 PF 10 % 500V CERAM 2 NO243
C 0092	149000105	CAP 1 PF+-0,25P 63V CERAM 1 508 NO245
C 0093	170531002	CAP 0,1 MF 10 % 250V POLYEST NO263
C 0094	149414701	CAP 4700 PF-20+50 500V CERAM 2 NO243
C 0095	156808047	CAP 47 MF-10+50 10V CHIMIC RAD 508 NO220
C 0096	149321002	CAP10000 PF-20+100 63V CERAM 2 NO242
C 0097	149414701	CAP 4700 PF-20+50 500V CERAM 2 NO243
C 0098	149414701	CAP 4700 PF-20+50 500V CERAM 2 NO243

7 5277 8021 Circuit Z1 - Carte alimentation

REPERE TOPO.	COMPOSANT NO ARTICLE	COMPOSANT DESIGNATION
C 0099	149321002	CAP10000 PF-20+100 63V CERAM 2 NO242
C 0100	149321002	CAP10000 PF-20+100 63V CERAM 2 NO242
C 0101	149321002	CAP10000 PF-20+100 63V CERAM 2 NO242
C 0102	156826010	CAP 10 MF-10+50 35V CHIMIC RAD 508 NO220
C 0103	149321002	CAP10000 PF-20+100 63V CERAM 2 NO242
C 0104	149511005	CAP 1000 PF 10 % 63V CERAM 2 NO242
C 0105	149210681	CAP 680 PF 10 % 500V CERAM 2 NO243
C 0106	156825047	CAP 47 MF-10+50 35V CHIMIC RAD 508 NO220
C 0107	149512205	CAP 2200 PF 20 % 63V CERAM 2 NO242
C 0108	149321002	CAP10000 PF-20+100 63V CERAM 2 NO242
C 0109	149512205	CAP 2200 PF 20 % 63V CERAM 2 NO242
C 0110	149321002	CAP10000 PF-20+100 63V CERAM 2 NO242
C 0111	176854448	CAP 0,47 MF 10 % 250V POLYEST NO263
C 0112	149321002	CAP10000 PF-20+100 63V CERAM 2 NO242
C 0113	149010331	CAP 330 PF 5 % 63V CERAM 1 508 NO245
C 0114	149100471	CAP 4,7 PF+-0,25P 500V CERAM 1 NO246
C 0115	149010331	CAP 330 PF 5 % 63V CERAM 1 508 NO245
C 0116	149101201	CAP 12 PF 5 % 500V CERAM 1 NO246
C 0117	145501410	CAP 0,1 MF-20+80 25V CERAM 3 RAD 508 LCC-- GFO 611 UB
C 0119	170532201	CAP 0,22 MF 10 % 250V POLYEST NO263
C 0120	176505410	CAP 0,1 MF 10 % 250V POLYEST RAD 100 SIEMS B32511-D3104-K
C 0121	149001005	CAP 10 PF 5 % 63V CERAM 1 508 NO245
C 0122	156826010	CAP 10 MF-10+50 35V CHIMIC RAD 508 NO220
C 0123	149321002	CAP10000 PF-20+100 63V CERAM 2 NO242
C 0124	149321002	CAP10000 PF-20+100 63V CERAM 2 NO242

REPERE TOPO.	COMPOSANT NO ARTICLE	COMPOSANT DESIGNATION
C 0125	149511005	CAP 1000 PF 10 % 63V CERAM 2 NO242
C 0126	149511005	CAP 1000 PF 10 % 63V CERAM 2 NO242
C 0127	149511005	CAP 1000 PF 10 % 63V CERAM 2 NO242
C 0128	149001005	CAP 10 PF 5 % 63V CERAM 1 508 NO245
C 0129	149001005	CAP 10 PF 5 % 63V CERAM 1 508 NO245
C 0130	149321002	CAP10000 PF-20+100 63V CERAM 2 NO242
C 0131	149321002	CAP10000 PF-20+100 63V CERAM 2 NO242
C 0132	149321002	CAP10000 PF-20+100 63V CERAM 2 NO242
C 0133	156808047	CAP 47 MF-10+50 10V CHIMIC RAD 508 NO220
C 0134	149511005	CAP 1000 PF 10 % 63V CERAM 2 NO242
C 0135	149001005	CAP 10 PF 5 % 63V CERAM 1 508 NO245
C 0136	149010101	CAP 100 PF 5 % 63V CERAM 1 508 NO245
C 0137	163020010	CAP 10 MF 20 % 25V CHIMIC RAD 508 RTC-- 2222-122- 56109
CR0001	200340040	DIOD REDRES* 1N4004 *400 V 1,0 A MOTOR INDIC
CR0002	200340040	DIOD REDRES* 1N4004 *400 V 1,0 A MOTOR INDIC
CR0003	200340040	DIOD REDRES* 1N4004 *400 V 1,0 A MOTOR INDIC
CR0004	200340040	DIOD REDRES* 1N4004 *400 V 1,0 A MOTOR INDIC
CR0005	200340040	DIOD REDRES* 1N4004 *400 V 1,0 A MOTOR INDIC
CR0006	200340040	DIOD REDRES* 1N4004 *400 V 1,0 A MOTOR INDIC
CR0007	200340040	DIOD REDRES* 1N4004 *400 V 1,0 A MOTOR INDIC
CR0008	200340040	DIOD REDRES* 1N4004 *400 V 1,0 A MOTOR INDIC
CR0009	200340040	DIOD REDRES* 1N4004 *400 V 1,0 A MOTOR INDIC
CR0013	200344480	DIOD SPCIAL* 1N4448 * 75 V SWITC TEXAS INDIC
CR0014	200400103	DIOD ZENER *ZPY 10 * 10 V 50 MA ITT-- INDIC
CR0019	200344480	DIOD SPCIAL* 1N4448 * 75 V SWITC TEXAS INDIC

7 5277 8021 Circuit Z1 - Carte alimentation

REPERE TOPO.	COMPOSANT NO ARTICLE	COMPOSANT DESIGNATION
CR0020	200344480	DIOD SPCIAL* 1N4448 * 75 V SWITC TEXAS INDIC
CR0021	200344480	DIOD SPCIAL* 1N4448 * 75 V SWITC TEXAS INDIC
CR0022	200340040	DIOD REDRES* 1N4004 *400 V 1,0 A MOTOR INDIC
CR0023	200304090	DIOD REDRES*BY 509 * 12,5K 4 MA RTC--
CR0024	200304090	DIOD REDRES*BY 509 * 12,5K 4 MA RTC--
CR0025	200305130	DIOD REDRES*EM 513 * 1,6K 1 A ITT--
CR0026	200305130	DIOD REDRES*EM 513 * 1,6K 1 A ITT--
CR0027	200340040	DIOD REDRES* 1N4004 *400 V 1,0 A MOTOR INDIC
CR0028	200340040	DIOD REDRES* 1N4004 *400 V 1,0 A MOTOR INDIC
CR0029	200304090	DIOD REDRES*BY 509 * 12,5K 4 MA RTC--
CR0030	200304090	DIOD REDRES*BY 509 * 12,5K 4 MA RTC--
CR0031	200344480	DIOD SPCIAL* 1N4448 * 75 V SWITC TEXAS INDIC
CR0032	200344480	DIOD SPCIAL* 1N4448 * 75 V SWITC TEXAS INDIC
CR0033	200344480	DIOD SPCIAL* 1N4448 * 75 V SWITC TEXAS INDIC
CR0034	200344480	DIOD SPCIAL* 1N4448 * 75 V SWITC TEXAS INDIC
CR0035	200340040	DIOD REDRES* 1N4004 *400 V 1,0 A MOTOR INDIC
CR0036	200344480	DIOD SPCIAL* 1N4448 * 75 V SWITC TEXAS INDIC
CR0037	200335950	DIOD GENERL 1N3595E 3DHD 150V 200MA THOS
CR0038	200344480	DIOD SPCIAL* 1N4448 * 75 V SWITC TEXAS INDIC
CR0039	200344480	DIOD SPCIAL* 1N4448 * 75 V SWITC TEXAS INDIC
CR0040	200344480	DIOD SPCIAL* 1N4448 * 75 V SWITC TEXAS INDIC
CR0041	200344480	DIOD SPCIAL* 1N4448 * 75 V SWITC TEXAS INDIC
CR0042	200344480	DIOD SPCIAL* 1N4448 * 75 V SWITC TEXAS INDIC
CR0043	200344480	DIOD SPCIAL* 1N4448 * 75 V SWITC TEXAS INDIC
CR0044	200340040	DIOD REDRES* 1N4004 *400 V 1,0 A MOTOR INDIC
CR0045	200344480	DIOD SPCIAL* 1N4448 * 75 V SWITC TEXAS INDIC
CR0046	200344480	DIOD SPCIAL* 1N4448 * 75 V SWITC TEXAS INDIC
CR0047	200344480	DIOD SPCIAL* 1N4448 * 75 V SWITC TEXAS INDIC
CR0048	200344480	DIOD SPCIAL* 1N4448 * 75 V SWITC TEXAS INDIC
CR0049	200344480	DIOD SPCIAL* 1N4448 * 75 V SWITC TEXAS INDIC
CR0050	200344480	DIOD SPCIAL* 1N4448 * 75 V SWITC TEXAS INDIC
CR0051	200344480	DIOD SPCIAL* 1N4448 * 75 V SWITC TEXAS INDIC
CR0052	200344480	DIOD SPCIAL* 1N4448 * 75 V SWITC TEXAS INDIC
CR0053	200344480	DIOD SPCIAL* 1N4448 * 75 V SWITC TEXAS INDIC
CR0054	200344480	DIOD SPCIAL* 1N4448 * 75 V SWITC TEXAS INDIC
CR0055	200344480	DIOD SPCIAL* 1N4448 * 75 V SWITC TEXAS INDIC
CR0056	200344480	DIOD SPCIAL* 1N4448 * 75 V SWITC TEXAS INDIC
CR0057	200344480	DIOD SPCIAL* 1N4448 * 75 V SWITC TEXAS INDIC
CR0058	200344480	DIOD SPCIAL* 1N4448 * 75 V SWITC TEXAS INDIC
CR0059	200344480	DIOD SPCIAL* 1N4448 * 75 V SWITC TEXAS INDIC
CR0060	200344480	DIOD SPCIAL* 1N4448 * 75 V SWITC TEXAS INDIC
CR0061	200342440	DIOD SPCIAL* 1N4244 * 20 V SWITC SESCO INDIC
CR0062	200335950	DIOD GENERL 1N3595E 3DHD 150V 200MA THOS
CR0063	200335950	DIOD GENERL 1N3595E 3DHD 150V 200MA THOS
CR0064	200342440	DIOD SPCIAL* 1N4244 * 20 V SWITC SESCO INDIC
CR0065	200342440	DIOD SPCIAL* 1N4244 * 20 V SWITC SESCO INDIC
CR0066	200342440	DIOD SPCIAL* 1N4244 * 20 V SWITC SESCO INDIC
CR0067	200342440	DIOD SPCIAL* 1N4244 * 20 V SWITC SESCO INDIC
CR0068	200342440	DIOD SPCIAL* 1N4244 * 20 V SWITC SESCO INDIC
CR0069	200342440	DIOD SPCIAL* 1N4244 * 20 V SWITC SESCO INDIC

7 5277 8021 Circuit Z1 - Carte alimentation

REPERE TOPO.	COMPOSANT NO ARTICLE	COMPOSANT DESIGNATION
CR0070	200344480	DIOD SPCIAL* 1N4448 * 75 V SWITC TEXAS INDIC
CR0071	200344480	DIOD SPCIAL* 1N4448 * 75 V SWITC TEXAS INDIC
CR0072	200342440	DIOD SPCIAL* 1N4244 * 20 V SWITC SESCO INDIC
CR0073	200342440	DIOD SPCIAL* 1N4244 * 20 V SWITC SESCO INDIC
CR0074	200342440	DIOD SPCIAL* 1N4244 * 20 V SWITC SESCO INDIC
CR0075	200342440	DIOD SPCIAL* 1N4244 * 20 V SWITC SESCO INDIC
CR0076	200342440	DIOD SPCIAL* 1N4244 * 20 V SWITC SESCO INDIC
CR0077	200342440	DIOD SPCIAL* 1N4244 * 20 V SWITC SESCO INDIC
CR0078	200344480	DIOD SPCIAL* 1N4448 * 75 V SWITC TEXAS INDIC
CR0079	200344480	DIOD SPCIAL* 1N4448 * 75 V SWITC TEXAS INDIC
CR0080	200342440	DIOD SPCIAL* 1N4244 * 20 V SWITC SESCO INDIC
CR0081	200335950	DIOD GENERL 1N3595E 3DHD 150V 200MA THOS
CR0082	200335950	DIOD GENERL 1N3595E 3DHD 150V 200MA THOS
CR0083	200344480	DIOD SPCIAL* 1N4448 * 75 V SWITC TEXAS INDIC
CR0084	200400103	DIOD ZENER *ZPY 10 * 10 V 50 MA ITT-- INDIC
CR0085	200340040	DIOD REDRES* 1N4004 *400 V 1,0 A MOTOR INDIC
CR0086	200344480	DIOD SPCIAL* 1N4448 * 75 V SWITC TEXAS INDIC
CR0087	200344480	DIOD SPCIAL* 1N4448 * 75 V SWITC TEXAS INDIC
CR0088	200344480	DIOD SPCIAL* 1N4448 * 75 V SWITC TEXAS INDIC
CR0089	200305130	DIOD REDRES*EM 513 * 1,6K 1 A ITT--
CR0090	200305130	DIOD REDRES*EM 513 * 1,6K 1 A ITT--
CR0091	200344480	DIOD SPCIAL* 1N4448 * 75 V SWITC TEXAS INDIC
CR0092	200344480	DIOD SPCIAL* 1N4448 * 75 V SWITC TEXAS INDIC
CR0093	200344480	DIOD SPCIAL* 1N4448 * 75 V SWITC TEXAS INDIC
CR0094	200344480	DIOD SPCIAL* 1N4448 * 75 V SWITC TEXAS INDIC

REPERE TOPO.	COMPOSANT NO ARTICLE	COMPOSANT DESIGNATION
CR0095	200344480	DIOD SPCIAL* 1N4448 * 75 V SWITC TEXAS INDIC
CR0096	200344480	DIOD SPECIAL 1N4448 75V SWITC TEXAS INDIC
CR0113 à CR0117	200335950	DIOD GENERL 1N3595E 3DHD 150V 200MA THOS
CR0098	200455033	DIOD ZENER *BZX 55 * 3,3V 5,0MA SESCO INDIC
CR0099	200344480	DIOD SPCIAL* 1N4448 * 75 V SWITC TEXAS INDIC
CR0100	200344480	DIOD SPCIAL* 1N4448 * 75 V SWITC TEXAS INDIC
CR0101	200304480	DIOD REDRES*BY 448 * 1,5K 1,5 A 1,5US RTC--
CR0102	200304480	DIOD REDRES*BY 448 * 1,5K 1,5 A 1,5US RTC--
CR0103	200344480	DIOD SPCIAL* 1N4448 * 75 V SWITC TEXAS INDIC
CR0104	200340040	DIOD REDRES* 1N4004 *400 V 1,0 A MOTOR INDIC
CR0105	200455270	DIOD ZENER *BZX 55 * 27 V 5,0MA SESCO INDIC
CR0106	200344480	DIOD SPCIAL* 1N4448 * 75 V SWITC TEXAS INDIC
CR0107	200344480	DIOD SPCIAL* 1N4448 * 75 V SWITC TEXAS INDIC
CR0108	200344480	DIOD SPCIAL* 1N4448 * 75 V SWITC TEXAS INDIC
CR0110	200455330	DIOD ZENER *BZX 55 * 33 V 5,0MA SESCO INDIC
CR0111	200344480	DIOD SPCIAL* 1N4448 * 75 V SWITC TEXAS INDIC
CR0112	200344480	DIOD SPCIAL* 1N4448 * 75 V SWITC TEXAS INDIC
DS0001	201506501	VOYANT AMPOUL NEON 65V FIL ORBIT N76530
DS0002	201506501	VOYANT AMPOUL NEON 65V FIL ORBIT N76530
DS0003	201506501	VOYANT AMPOUL NEON 65V FIL ORBIT N76530
F 0001	220404002	FUSIBLE SUPPRT SOCLE 5 X 20 PICO CASBA CSPF 2
J 0001	214421035	CONNEC CI IMP EMB FEM 3C PICO 396 MOLEX 26-11-6035 3215-3BH
J 0002	214421033	CONNEC CI IMP EMB FEM 3C SOUD PAS 254 MOLEX 38-00-1333 4455C/AAA
J 0003	214421033	CONNEC CI IMP EMB FEM 3C SOUD PAS 254 MOLEX 38-00-1333 4455C/AAA
J 0004	214421033	CONNEC CI IMP EMB FEM 3C SOUD PAS 254 MOLEX 38-00-1333 4455C/AAA

7 5277 8021 Circuit Z1 - Carte alimentation

REPERE TOPO.	COMPOSANT NO ARTICLE	COMPOSANT DESIGNATION
J 0005	214421033	CONNEC CI IMP EMB FEM 3C SOUD PAS 254 MOLEX 38-00-1333 4455C/AAA
J 0006	214421106	CONNEC CI IMP EMB FEM 10C PICO 396 MOLEX 26-11-6104 3215-10AH
J 0007	214421106	CONNEC CI IMP EMB FEM 10C PICO 396 MOLEX 26-11-6104 3215-10AH
J 0008	214421106	CONNEC CI IMP EMB FEM 10C PICO 396 MOLEX 26-11-6104 3215-10AH
J 0009	214421058	CONNEC CI IMP EMB FEM 5C PICO C/DORE 396 MOLEX 26-11-6051 3215-5AHG
J 0010	214421057	CONNEC CI IMP EMB MAL 5C PICO 396 MOLEX 09-67-1051 2461-5A
J 0014	214126150	CONNEC CI IMP MAL 15C PICO COUDE 127 TRELC TP15MCI SANS GUIDE
L 0001	212600100	ACCES MAGN PERLE 3,7X1,2X3,5-4A1 FEROX RTC-- 4322-020- 34410
L 0002	212600100	ACCES MAGN PERLE 3,7X1,2X3,5-4A1 FEROX RTC-- 4322-020- 34410
L 0003	212600100	ACCES MAGN PERLE 3,7X1,2X3,5-4A1 FEROX RTC-- 4322-020- 34410
L 0004	212600100	ACCES MAGN PERLE 3,7X1,2X3,5-4A1 FEROX RTC-- 4322-020- 34410
Q 0001	200104920	TRANST LP SI P*BF 492 * TO 92 MOTOR
Q 0002	200101840	TRANST LP SI N*BC 184 * X 55 N2081 INDIC
Q 0003	200102142	TRANST LP SI P*BC 214 * X 55 N2081 INDIC
Q 0004	200102423	TRANST HP SI P*BD 242C * TO 220 SESCO INDIC
Q 0005	200108060	TRANST HP SI P*BD 806 * TO 220 MOTOR
Q 0006	200102142	TRANST LP SI P*BC 214 * X 55 N2081 INDIC
Q 0007	200108050	TRANST HP SI N*BD 805 * TO 220 MOTOR
Q 0008	200102411	TRANST HP SI N*BD 241A * TO 220 N2085 INDIC
Q 0009	200100651	TRANST SP SI N*BDT 65B *DARLI TO 220 RTC--
Q 0010	200123693	TRANST LP SI N*MPS 2369 * TO 92 MOTOR
Q 0011	200104920	TRANST LP SI P*BF 492 * TO 92 MOTOR
Q 0012	200123693	TRANST LP SI N*MPS 2369 * TO 92 MOTOR
Q 0013	200123693	TRANST LP SI N*MPS 2369 * TO 92 MOTOR
Q 0014	200155510	TRANST LP SI N*2N 5551 * TO 92 MOTOR

REPERE TOPO.	COMPOSANT NO ARTICLE	COMPOSANT DESIGNATION
Q 0015	200154010	TRANST LP SI P*2N 5401 * TO 92 MOTOR
Q 0016	200155510	TRANST LP SI N*2N 5551 * TO 92 MOTOR
Q 0017	200104920	TRANST LP SI P*BF 492 * TO 92 MOTOR
Q 0018	200103920	TRANST HP SI N*BF 392 * TO 92 MOTOR
Q 0019	200101840	TRANST LP SI N*BC 184 * X 55 N2081 INDIC
Q 0020	200103920	TRANST HP SI N*BF 392 * TO 92 MOTOR
Q 0021	200101840	TRANST LP SI N*BC 184 * X 55 N2081 INDIC
Q 0022	200102142	TRANST LP SI P*BC 214 * X 55 N2081 INDIC
Q 0023	200101840	TRANST LP SI N*BC 184 * X 55 N2081 INDIC
Q 0024	200101840	TRANST LP SI N*BC 184 * X 55 N2081 INDIC
Q 0025	200123693	TRANST LP SI N*MPS 2369 * TO 92 MOTOR
Q 0026	200142581	TRANST LP SI P*PN 4258 * TO 92 NS--- INDIC
Q 0027	200102142	TRANST LP SI P*BC 214 * X 55 N2081 INDIC
Q 0028	200102142	TRANST LP SI P*BC 214 * X 55 N2081 INDIC
Q 0029	200102142	TRANST LP SI P*BC 214 * X 55 N2081 INDIC
Q 0030	200102142	TRANST LP SI P*BC 214 * X 55 N2081 INDIC
Q 0031	200123693	TRANST LP SI N*MPS 2369 * TO 92 MOTOR
Q 0032	200142581	TRANST LP SI P*PN 4258 * TO 92 NS--- INDIC
Q 0033	200142581	TRANST LP SI P*PN 4258 * TO 92 NS--- INDIC
Q 0034	200142581	TRANST LP SI P*PN 4258 * TO 92 NS--- INDIC
Q 0035	200142581	TRANST LP SI P*PN 4258 * TO 92 NS--- INDIC
Q 0036	200142581	TRANST LP SI P*PN 4258 * TO 92 NS--- INDIC
Q 0037	200142581	TRANST LP SI P*PN 4258 * TO 92 NS--- INDIC
Q 0038	200123693	TRANST LP SI N*MPS 2369 * TO 92 MOTOR
Q 0039	200142581	TRANST LP SI P*PN 4258 * TO 92 NS--- INDIC

7 5277 8021 Circuit Z1 - Carte alimentation

REPERE TOPO.	COMPOSANT NO ARTICLE	COMPOSANT DESIGNATION
Q 0040	200104410	TRANST EC SI N*U 441 * TO 71 SILIC
Q 0041	200123693	TRANST LP SI N*MPS 2369 * TO 92 MOTOR
Q 0042	200102142	TRANST LP SI P*BC 214 * X 55 N2081 INDIC
Q 0043	200142581	TRANST LP SI P*PN 4258 * TO 92 NS--- INDIC
Q 0044	200123693	TRANST LP SI N*MPS 2369 * TO 92 MOTOR
Q 0045	200104490	TRANST LP SI P*BFQ 52 * TO 72 N2082
Q 0046	200142581	TRANST LP SI P*PN 4258 * TO 92 NS--- INDIC
Q 0047	200101840	TRANST LP SI N*BC 184 * X 55 N2081 INDIC
Q 0048	200123693	TRANST LP SI N*MPS 2369 * TO 92 MOTOR
Q 0049	200142581	TRANST LP SI P*PN 4258 * TO 92 NS--- INDIC
Q 0050	200142581	TRANST LP SI P*PN 4258 * TO 92 NS--- INDIC
Q 0051	200123693	TRANST LP SI N*MPS 2369 * TO 92 MOTOR
Q 0052	200142581	TRANST LP SI P*PN 4258 * TO 92 NS--- INDIC
Q 0053	200102142	TRANST LP SI P*BC 214 * X 55 N2081 INDIC
		*
Q 0055	200101840	TRANST LP SI N*BC 184 * X 55 N2081 INDIC
Q 0056	200142581	TRANST LP SI P*PN 4258 * TO 92 NS--- INDIC
Q 0057	200103920	TRANST HP SI N*BF 392 * TO 92 MOTOR
Q 0058	200103920	TRANST HP SI N*BF 392 * TO 92 MOTOR
Q 0059	200104920	TRANST LP SI P*BF 492 * TO 92 MOTOR
Q 0062	200103920	TRANST HP SI N*BF 392 * TO 92 MOTOR
Q 0063	200103920	TRANST HP SI N*BF 392 * TO 92 MOTOR
Q 0064	200103920	TRANST HP SI N*BF 392 * TO 92 MOTOR

REPERE TOPO.	COMPOSANT NO ARTICLE	COMPOSANT DESIGNATION
Q 0065	200103920	TRANST HP SI N*BF 392 * TO 92 MOTOR
Q 0066	200104920	TRANST LP SI P*BF 492 * TO 92 MOTOR
Q 0067	200100870	TRANST HP SI N*BUX 87 * TO 126 RTC--
Q 0068	200100870	TRANST HP SI N*BUX 87 * TO 126 RTC--
Q 0069	200104920	TRANST LP SI P*BF 492 * TO 92 MOTOR
Q 0070	200100870	TRANST HP SI N*BUX 87 * TO 126 RTC--
Q 0071	200100870	TRANST HP SI N*BUX 87 * TO 126 RTC--
Q 0072	200102142	TRANST LP SI P*BC 214 * X 55 N2081 INDIC
Q 0075	200101840	TRANST LP SI N*BC 184 * X 55 N2081 INDIC
Q 0076	200104920	TRANST LP SI P*BF 492 * TO 92 MOTOR
R 0001	0177 00102	RES 20 OHM 5 % 0,25W CARBON N0102
R 0002	041321300	RES 130 K 1 % 0,25W METAL 50 PPM N0112
R 0003	041321180	RES 118 K 1 % 0,25W METAL 50 PPM N0112
R 0004	016420270	RES 27 K 5 % 0,25W CARBON N0102
R 0005	041321300	RES 130 K 1 % 0,25W METAL 50 PPM N0112
R 0006	016700015	RES 1,5 OHM 5 % 0,5 W CARBON N0106
R 0007	041320100	RES 10 K 1 % 0,25W METAL 50 PPM N0112
R 0008	016710240	RES 2,4 K 5 % 0,5 W CARBON N0106
R 0009	016410200	RES 2,0 K 5 % 0,25W CARBON N0102
R 0010	041310301	RES 3,01 K 1 % 0,25W METAL 50 PPM N0112
R 0011	083703822	RES 0,22 OHM 5 % 1 W BOBINE GEKA- 63B
R 0012	10591100	POT 1 K 20%A CER TRIM PLAQ HOR CI OHMIC VA05 H
R 0013	041310301	RES 3,01 K 1 % 0,25W METAL 50 PPM N0112
R 0014	041320100	RES 10 K 1 % 0,25W METAL 50 PPM N0112
R 0015	041320200	RES 20 K 1 % 0,25W METAL 50 PPM N0112

7 5277 8021 Circuit Z1 - Carte alimentation

REPERE TOPO.	COMPOSANT NO ARTICLE	COMPOSANT DESIGNATION
R 0016	041320100	RES 10 K 1 % 0,25W METAL 50 PPM N0112
R 0017	016403300	RES 330 OHM 5 % 0,25W CARBON N0102
R 0018	016402000	RES 200 OHM 5 % 0,25W CARBON N0102
R 0019	016410120	RES 1,2 K 5 % 0,25W CARBON N0102
R 0020	016400430	RES 43 OHM 5 % 0,25W CARBON N0102
R 0021	041320100	RES 10 K 1 % 0,25W METAL 50 PPM N0112
R 0022	016420270	RES 27 K 5 % 0,25W CARBON N0102
R 0023	041320100	RES 10 K 1 % 0,25W METAL 50 PPM N0112
R 0024	016410100	RES 1,0 K 5 % 0,25W CARBON N0102
R 0025	041320511	RES 51,1 K 1 % 0,25W METAL 50 PPM N0112
R 0026	105400322	POT 22 K 20%A CAR TRIM PLAQ HOR CI PIHER PT10 LV
R 0028	016423300	RES 330 K 5 % 0,25W CARBON N0102
R 0029	016410100	RES 1,0 K 5 % 0,25W CARBON N0102
R 0030	016400010	RES 1,0 OHM 5 % 0,25W CARBON N0102
R 0031	016420100	RES 10 K 5 % 0,25W CARBON N0102
R 0032	068100633	RES 33 M 5 % 0,5 W METAL RTC-- VR 37
R 0033	068100633	RES 33 M 5 % 0,5 W METAL RTC-- VR 37
R 0034	016710100	RES 1,0 K 5 % 0,5 W CARBON N0106
R 0035	016420100	RES 10 K 5 % 0,25W CARBON N0102
R 0036	105400422	POT 220 K 20%A CAR TRIM PLAQ HOR CI PIHER PT10 LV
R 0037	016425100	RES 510 K 5 % 0,25W CARBON N0102
R 0038	016410220	RES 2,2 K 5 % 0,25W CARBON N0102
R 0039	016410470	RES 4,7 K 5 % 0,25W CARBON N0102
R 0040	016421000	RES 100 K 5 % 0,25W CARBON N0102
R 0041	041320274	RES 27,4 K 1 % 0,25W METAL 50 PPM N0112

REPERE TOPO.	COMPOSANT NO ARTICLE	INDICE MODIF	COMPOSANT DESIGNATION
R 0042	041310154		RES 1,54 K 1 % 0,25W METAL 50 PPM N0112
R 0043	041304420		RES 442 OHM 1 % 0,25W METAL 50 PPM N0112
R 0044	041310392		RES 3,92 K 1 % 0,25W METAL 50 PPM N0112
R 0045	016400100		RES 10 OHM 5 % 0,25W CARBON N0102
R 0046	016710220		RES 2,2 K 5 % 0,5 W CARBON N0106
R 0047	016420300		RES 30 K 5 % 0,25W CARBON N0102
R 0048	016410470		RES 4,7 K 5 % 0,25W CARBON N0102
R 0049	108600222		POT 2,2K 20%A CER TRIM ROND HOR 0,75W CI SFERN T7YB
R 0050	016410390		RES 3,9 K 5 % 0,25W CARBON N0102
R 0051	897500313		POTC DBCS 470KAV+2,2KAR 20%A CI RUWID 0810-300
R 0052	035203310		RES 10 K 5 % 0,12W METAL 100 PPM N0101
R 0054	016421200		RES 120 K 5 % 0,25W CARBON N0102
R 0055	897500311		POTC 220K 20%A CI RUWID 0502-301
R 0056	016431000		RES 1,0 M 5 % 0,25W CARBON N0102
R 0057	016401000		RES 100 OHM 5 % 0,25W CARBON N0102
R 0058	016420100		RES 10 K 5 % 0,25W CARBON N0102
R 0059	016421000		RES 100 K 5 % 0,25W CARBON N0102
R 0060	016420100		RES 10 K 5 % 0,25W CARBON N0102
R 0061	016420100		RES 10 K 5 % 0,25W CARBON N0102
R 0062	016420360		RES 36 K 5 % 0,25W CARBON N0102
R 0063	016420510		RES 51 K 5 % 0,25W CARBON N0102
R 0064	068100633		RES 33 M 5 % 0,5 W METAL RTC-- VR 37
R 0065	016732000		RES 2,0 M 5 % 0,50W CARBON N0106
R 0067	105410222		POT 2,2K 20%A CAR TRIM PLAQ VER CI PIHER PT10MWH(5) AXE 5012
R 0068	016421000		RES 100 K 5 % 0,25W CARBON N0102

7 5277 8021 Circuit Z1 - Carte alimentation

REPERE TOPO.	COMPOSANT NO ARTICLE	COMPOSANT DESIGNATION
R 0069	016421000	RES 100 K 5 % 0,25W CARBON NO102
R 0070	016400100	RES 10 OHM 5 % 0,25W CARBON NO102
R 0071	016400100	RES 10 OHM 5 % 0,25W CARBON NO102
R 0072	016421000	RES 100 K 5 % 0,25W CARBON NO102
R 0073	016400100	RES 10 OHM 5 % 0,25W CARBON NO102
R 0074	016421000	RES 100 K 5 % 0,25W CARBON NO102
R 0075	016421000	RES 100 K 5 % 0,25W CARBON NO102
R 0076	016421000	RES 100 K 5 % 0,25W CARBON NO102
R 0077	041304990	RES 499 OHM 1 % 0,25W METAL 50 PPM NO112
R 0078	041310100	RES 1 K 1 % 0,25W METAL 50 PPM NO112
R 0079	016420100	RES 10 K 5 % 0,25W CARBON NO102
R 0080	016431000	RES 1,0 M 5 % 0,25W CARBON NO102
R 0081	016425100	RES 510 K 5 % 0,25W CARBON NO102
R 0082	016421000	RES 100 K 5 % 0,25W CARBON NO102
R 0083	016410100	RES 1,0 K 5 % 0,25W CARBON NO102
R 0084	016421000	RES 100 K 5 % 0,25W CARBON NO102
R 0085	016421000	RES 100 K 5 % 0,25W CARBON NO102
R 0086	016421000	RES 100 K 5 % 0,25W CARBON NO102
R 0087	041310150	RES 1,5 K 1 % 0,25W METAL 50 PPM NO112
R 0088	016420100	RES 10 K 5 % 0,25W CARBON NO102
R 0089	016431000	RES 1,0 M 5 % 0,25W CARBON NO102
R 0090	016410510	RES 5,1 K 5 % 0,25W CARBON NO102
R 0091	016420510	RES 51 K 5 % 0,25W CARBON NO102
R 0092	016410160	RES 1,6 K 5 % 0,25W CARBON NO102
R 0093	016421000	RES 100 K 5 % 0,25W CARBON NO102

REPERE TOPO.	COMPOSANT NO ARTICLE	COMPOSANT DESIGNATION
R 0094	016421000	RES 100 K 5 % 0,25W CARBON NO102
R 0095	016421000	RES 100 K 5 % 0,25W CARBON NO102
R 0096	041310200	RES 2 K 1 % 0,25W METAL 50 PPM NO112
R 0097	016410330	RES 3,3 K 5 % 0,25W CARBON NO102
R 0098	016410100	RES 1,0 K 5 % 0,25W CARBON NO102
R 0099	041310392	RES 3,92 K 1 % 0,25W METAL 50 PPM NO112
R 0100	016410470	RES 4,7 K 5 % 0,25W CARBON NO102
R 0101	016421000	RES 100 K 5 % 0,25W CARBON NO102
R 0102	016410100	RES 1,0 K 5 % 0,25W CARBON NO102
R 0103	016410510	RES 5,1 K 5 % 0,25W CARBON NO102
R 0104	016420100	RES 10 K 5 % 0,25W CARBON NO102
R 0105	016410330	RES 3,3 K 5 % 0,25W CARBON NO102
R 0106	016400750	RES 75 OHM 5 % 0,25W CARBON NO102
R 0107	041320137	RES 13,7 K 1 % 0,25W METAL 50 PPM NO112
R 0108	016410200	RES 2,0 K 5 % 0,25W CARBON NO102
R 0109	016732400	RES 2,4 M 5 % 0,5 W CARBON NO106
R 0110	041320133	RES 13,3 K 1 % 0,25W METAL 50 PPM NO112
R 0111	041304870	RES 487 OHM 1 % 0,25W METAL 50 PPM NO112
R 0112	016400100	RES 10 OHM 5 % 0,25W CARBON NO102
R 0113	016400100	RES 10 OHM 5 % 0,25W CARBON NO102
R 0114	016421000	RES 100 K 5 % 0,25W CARBON NO102
R 0115	016421000	RES 100 K 5 % 0,25W CARBON NO102
R 0116	016421000	RES 100 K 5 % 0,25W CARBON NO102
R 0117	016431000	RES 1,0 M 5 % 0,25W CARBON NO102
R 0118	016410330	RES 3,3 K 5 % 0,25W CARBON NO102

7 5277 8021 Circuit Z1 - Carte alimentation

REPERE TOPO.	COMPOSANT NO ARTICLE	COMPOSANT DESIGNATION
R 0119	016410100	RES 1,0 K 5 % 0,25W CARBON N0102
R 0120	016408200	RES 820 OHM 5 % 0,25W CARBON N0102
R 0121	016410200	RES 2,0 K 5 % 0,25W CARBON N0102
R 0122	016410200	RES 2,0 K 5 % 0,25W CARBON N0102
R 0123	041309090	RES 909 OHM 1 % 0,25W METAL 50 PPM N0112
R 0124	016410200	RES 2,0 K 5 % 0,25W CARBON N0102
R 0125	016420100	RES 10 K 5 % 0,25W CARBON N0102
R 0126	041310442	RES 4,42 K 1 % 0,25W METAL 50 PPM N0112
R 0127	016401000	RES 100 OHM 5 % 0,25W CARBON N0102
R 0128	016402700	RES 270 OHM 5 % 0,25W CARBON N0102
R 0129	016405100	RES 510 OHM 5 % 0,25W CARBON N0102
R 0130	016410120	RES 1,2 K 5 % 0,25W CARBON N0102
R 0131	016402000	RES 200 OHM 5 % 0,25W CARBON N0102
R 0132	016410100	RES 1,0 K 5 % 0,25W CARBON N0102
R 0133	041303650	RES 365 OHM 1 % 0,25W METAL 50 PPM N0112
R 0134	016420100	RES 10 K 5 % 0,25W CARBON N0102
R 0135	016420470	RES 47 K 5 % 0,25W CARBON N0102
R 0136	016422200	RES 220 K 5 % 0,25W CARBON N0102
R 0137	041307680	RES 768 OHM 1 % 0,25W METAL 50 PPM N0112
R 0138	041310732	RES 7,32 K 1 % 0,25W METAL 50 PPM N0112
R 0139	016405100	RES 510 OHM 5 % 0,25W CARBON N0102
R 0140	041310576	RES 5,76 K 1 % 0,25W METAL 50 PPM N0112
R 0141	016420100	RES 10 K 5 % 0,25W CARBON N0102
R 0143	016405100	RES 510 OHM 5 % 0,25W CARBON N0102
R 0144	016401500	RES 150 OHM 5 % 0,25W CARBON N0102

REPERE TOPO.	COMPOSANT NO ARTICLE	COMPOSANT DESIGNATION
R 0145	041305760	RES 576 OHM 1 % 0,25W METAL 50 PPM N0112
R 0146	016405100	RES 510 OHM 5 % 0,25W CARBON N0102
R 0147	016401500	RES 150 OHM 5 % 0,25W CARBON N0102
R 0148	041309090	RES 909 OHM 1 % 0,25W METAL 50 PPM N0112
R 0149	041307680	RES 768 OHM 1 % 0,25W METAL 50 PPM N0112
R 0150	041310169	RES 1,69 K 1 % 0,25W METAL 50 PPM N0112
R 0151	016405100	RES 510 OHM 5 % 0,25W CARBON N0102
R 0152	041310169	RES 1,69 K 1 % 0,25W METAL 50 PPM N0112
R 0153	016410200	RES 2,0 K 5 % 0,25W CARBON N0102
R 0154	016410150	RES 1,5 K 5 % 0,25W CARBON N0102
R 0155	016420470	RES 47 K 5 % 0,25W CARBON N0102
R 0156	016420100	RES 10 K 5 % 0,25W CARBON N0102
R 0157	016431000	RES 1,0 M 5 % 0,25W CARBON N0102
R 0158	016421000	RES 100 K 5 % 0,25W CARBON N0102
R 0159	016421000	RES 100 K 5 % 0,25W CARBON N0102
R 0160	016421000	RES 100 K 5 % 0,25W CARBON N0102
R 0161	016421000	RES 100 K 5 % 0,25W CARBON N0102
R 0162	016421000	RES 100 K 5 % 0,25W CARBON N0102
R 0163	016421000	RES 100 K 5 % 0,25W CARBON N0102
R 0164	016421000	RES 100 K 5 % 0,25W CARBON N0102
R 0165	016421000	RES 100 K 5 % 0,25W CARBON N0102
R 0166	016421000	RES 100 K 5 % 0,25W CARBON N0102
R 0167	016410100	RES 1,0 K 5 % 0,25W CARBON N0102
R 0168	016420470	RES 47 K 5 % 0,25W CARBON N0102
R 0169	016407500	RES 750 OHM 5 % 0,25W CARBON N0102

7 5277 8021 Circuit Z1 - Carte alimentation

REPERE TOPO.	COMPOSANT NO ARTICLE	COMPOSANT DESIGNATION
R 0170	016400430	RES 43 OHM 5 % 0,25W CARBON N0102
R 0171	016400220	RES 22 OHM 5 % 0,25W CARBON N0102
R 0172	016410200	RES 2,0 K 5 % 0,25W CARBON N0102
R 0173	016421000	RES 100 K 5 % 0,25W CARBON N0102
R 0174	016421000	RES 100 K 5 % 0,25W CARBON N0102
R 0175	016410100	RES 1,0 K 5 % 0,25W CARBON N0102
R 0176	016429100	RES 910 K 5 % 0,25W CARBON N0102
R 0177	016420100	RES 10 K 5 % 0,25W CARBON N0102
R 0178	016431000	RES 1,0 M 5 % 0,25W CARBON N0102
R 0179	016420300	RES 30 K 5 % 0,25W CARBON N0102
R 0180	016421000	RES 100 K 5 % 0,25W CARBON N0102
R 0181	016420220	RES 22 K 5 % 0,25W CARBON N0102
R 0182	016420300	RES 30 K 5 % 0,25W CARBON N0102
R 0183	016427500	RES 750 K 5 % 0,25W CARBON N0102
R 0184	016424300	RES 430 K 5 % 0,25W CARBON N0102
R 0185	016402400	RES 240 OHM 5 % 0,25W CARBON N0102
R 0186	105400210	POT 1 K 20%A CAR TRIM PLAQ HOR CI PIHER PT10 LV
R 0187	016410160	RES 1,6 K 5 % 0,25W CARBON N0102
R 0193	105400310	POT 10 K 20%A CAR TRIM PLAQ HOR CI PIHER PT10 LV
R 0194	105400422	POT 220 K 20%A CAR TRIM PLAQ HOR CI PIHER PT10 LV
R 0195	041305760	RES 576 OHM 1 % 0,25W METAL 50 PPM N0112
R 0196	016410200	RES 2,0 K 5 % 0,25W CARBON N0102
R 0197	016420100	RES 10 K 5 % 0,25W CARBON N0102
R 0198	016421000	RES 100 K 5 % 0,25W CARBON N0102
R 0199	016420100	RES 10 K 5 % 0,25W CARBON N0102

REPERE TOPO.	COMPOSANT NO ARTICLE	COMPOSANT DESIGNATION
R 0200	016421000	RES 100 K 5 % 0,25W CARBON N0102
R 0201	016420100	RES 10 K 5 % 0,25W CARBON N0102
R 0202	016420470	RES 47 K 5 % 0,25W CARBON N0102
R 0203	016420470	RES 47 K 5 % 0,25W CARBON N0102
R 0204	016421000	RES 100 K 5 % 0,25W CARBON N0102
R 0205	016421000	RES 100 K 5 % 0,25W CARBON N0102
R 0206	016741000	RES 10 M 5 % 0,5 W CARBON N0106
R 0207	016732700	RES 2,7 M 5 % 0,5 W CARBON N0106
R 0210	016410100	RES 1,0 K 5 % 0,25W CARBON N0102
R 0214	016421000	RES 100 K 5 % 0,25W CARBON N0102
R 0215	016410510	RES 5,1 K 5 % 0,25W CARBON N0102
R 0216	897500315	POTC DBCU+INT 220KAV+1M AR 20%A CI RUWID 0808-316
R 0217	016406200	RES 620 OHM 5 % 0,25W CARBON N0102
R 0218	016420680	RES 68 K 5 % 0,25W CARBON N0102
R 0219	016431000	RES 1,0 M 5 % 0,25W CARBON N0102
R 0220	897500316	POTC DBCS+INT 10KAV+220KAR 20%A CI RUWID 0811-301E
R 0221	016421000	RES 100 K 5 % 0,25W CARBON N0102
R 0222	016420470	RES 47 K 5 % 0,25W CARBON N0102
R 0223	016420100	RES 10 K 5 % 0,25W CARBON N0102
R 0224	016410360	RES 3,6 K 5 % 0,25W CARBON N0102

7 5277 8021 Circuit Z1 - Carte alimentation

REPERE TOPO.	COMPOSANT NO ARTICLE	COMPOSANT DESIGNATION
R 0225	016420300	RES 30' K 5 % 0,25W CARBON NO102
R 0226	016420470	RES 47 K 5 % 0,25W CARBON NO102
R 0227	016420300	RES 30 K 5 % 0,25W CARBON NO102
R 0228	016420470	RES 47 K 5 % 0,25W CARBON NO102
R 0229	016420680	RES 68 K 5 % 0,25W CARBON NO102
R 0230	106024700	POT 47 K 20%A CER TRIM PLAQ VER CI NO332
R 0231	016420470	RES 47 K 5 % 0,25W CARBON NO102
R 0232	016423000	RES 300 K 5 % 0,25W CARBON NO102
R0295	017700111	RES 0,1 OHM
R0296	017700111	RES 0,1 OHM
		CI
R 0238	016420300	RES 30 K 5 % 0,25W CARBON NO102
R 0239	016410300	RES 3,0 K 5 % 0,25W CARBON NO102
R 0240	016420560	RES 56 K 5 % 0,25W CARBON NO102
R 0241	106024700	POT 47 K 20%A CER TRIM PLAQ VER CI NO332
R 0242	016410430	RES 4,3 K 5 % 0,25W CARBON NO102
R 0243	106032200	POT 220 K 20%A CER TRIM PLAQ VER CI NO332
R 0244	016420150	RES 15 K 5 % 0,25W CARBON NO102
R 0245	016410820	RES 8,2 K 5 % 0,25W CARBON NO102
R 0246	106034700	POT 470 K 20%A CER TRIM PLAQ VER CI NO332
R 0247	016420750	RES 75 K 5 % 0,25W CARBON NO102
R 0248	016420220	RES 22 K 5 % 0,25W CARBON NO102
R 0249	016420150	RES 15 K 5 % 0,25W CARBON NO102

REPERE TOPO.	COMPOSANT NO ARTICLE	COMPOSANT DESIGNATION
R 0250	041331000	RES 1 M 1 % 0,25W METAL 100 PPM NO112
R 0251	041331000	RES 1 M 1 % 0,25W METAL 100 PPM NO112
R 0252	016410360	RES 3,6 K 5 % 0,25W CARBON NO102
R 0254	016410470	RES 4,7 K 5 % 0,25W CARBON NO102
R 0255	068100510	RES 1 M 5 % 0,5 W METAL RTC-- VR 37
R 0256	068100510	RES 1 M 5 % 0,5 W METAL RTC-- VR 37
R 0257	068100510	RES 1 M 5 % 0,5 W METAL RTC-- VR 37
R 0258	016410100	RES 1,0 K 5 % 0,25W CARBON NO102
R 0259	041331000	RES 1 M 1 % 0,25W METAL 100 PPM NO112
R 0260	041331000	RES 1 M 1 % 0,25W METAL 100 PPM NO112
R 0261	068100510	RES 1 M 5 % 0,5 W METAL RTC-- VR 37
R 0262	068100510	RES 1 M 5 % 0,5 W METAL RTC-- VR 37
R 0263	068100510	RES 1 M 5 % 0,5 W METAL RTC-- VR 37
R 0264	016410360	RES 3,6 K 5 % 0,25W CARBON NO102
R 0266	016410470	RES 4,7 K 5 % 0,25W CARBON NO102
R 0267	016410100	RES 1,0 K 5 % 0,25W CARBON NO102
R 0268	016410270	RES 2,7 K 5 % 0,25W CARBON NO102
R 0269	016405600	RES 560 OHM 5 % 0,25W CARBON NO102
R 0270	016420100	RES 10 K 5 % 0,25W CARBON NO102
R 0271	016423000	RES 300 K 5 % 0,25W CARBON NO102
R 0273	016410270	RES 2,7 K 5 % 0,25W CARBON NO102
R 0274	016720270	RES 27 K 5 % 0,5 W CARBON NO106
R 0275	016423600	RES 360 K 5 % 0,25W CARBON NO102
R 0276	105402522	POT 2,2M 20%A CAR TRIM PLAQ VER CI PIHER PTIO H5
R 0277	016421000	RES 100 K 5 % 0,25W CARBON NO102

7 5277 8021 Circuit Z1 - Carte alimentation

REPERE TOPO.	COMPOSANT NO ARTICLE	COMPOSANT DESIGNATION
R 0278	016421000	RES 100 K 5 % 0,25W CARBON N0102
R 0279	016421000	RES 100 K 5 % 0,25W CARBON N0102
R 0280	016420300	RES 30 K 5 % 0,25W CARBON N0102
R 0281	016420100	RES 10 K 5 % 0,25W CARBON N0102
R 0282	016420150	RES 15 K 5 % 0,25W CARBON N0102
R 0283	016420200	RES 20 K 5 % 0,25W CARBON N0102
R 0284	016422000	RES 200 K 5 % 0,25W CARBON N0102
R 0285	016422200	RES 220 K 5 % 0,25W CARBON N0102
R 0286	016420220	RES 22 K 5 % 0,25W CARBON N0102
R 0287	016421000	RES 100 K 5 % 0,25W CARBON N0102
R 0288	016402000	RES 200 OHM 5 % 0,25W CARBON N0102
R 0289	016400510	RES 51 OHM 5 % 0,25W CARBON N0102
R 0290	016421200	RES 120 K 5 % 0,25W CARBON N0102
R 0291	016400015	RES 1,5 OHM 5 % 0,25W CARBON N0102
RR0001	087810470	RESEAU RES 100 K 7 2 % IDEN SIL 8 N0190
RR0002	087813340	RESEAU RES 10 K 4 2 % IDEN SIL 8 SFERN SIL8-4
RR0003	087813340	RESEAU RES 10 K 4 2 % IDEN SIL 8 SFERN SIL8-4
RR0004	087810470	RESEAU RES 100 K 7 2 % IDEN SIL 8 N0190
RR0005	087813340	RESEAU RES 10 K 4 2 % IDEN SIL 8 SFERN SIL8-4
RR0006	087813340	RESEAU RES 10 K 4 2 % IDEN SIL 8 SFERN SIL8-4
RR0007	087813188	RESEAU RES 220 OHM 4 2 % IDEN SIL 8 SFERN SIL8-4
RR0008	087813188	RESEAU RES 220 OHM 4 2 % IDEN SIL 8 SFERN SIL8-4
RR0009	087813311	RESEAU RES 2,7 K 4 2 % IDEN SIL 8 SFERN SIL8-4
RR0010	087813311	RESEAU RES 2,7 K 4 2 % IDEN SIL 8 SFERN SIL8-4
S 0001	892800021	COMMUTATEUR SIEMENS POUR CI 1 ELEMENT

REPERE TOPO.	COMPOSANT NO ARTICLE	COMPOSANT DESIGNATION
S 0002	892800021	COMMUTATEUR SIEMENS POUR CI 1 ELEMENT
T 0001	889600161	TRANSFO THT TC69294 5277
U 0001	265014580	CI INT LIN BIP*MC 1458CP1 *AMP OP DIL 8 MOTOR
U 0002	266007230	CI INT LIN BIP*UA 723CN *REGUL DIL 14 TEXAS
U 0003	266078050	CI INT LIN BIP MC 7805CT REGUL P TO 220 N2104
U 0004	266007230	CI INT LIN BIP*UA 723CN *REGUL DIL 14 TEXAS
U 0005	260040930	CI INT LOG CMC*MC 14093BCP *PORTE DIL 14 MOTOR IMPER
U 0006	264040290	CI INT LOG CMS*MC 14029BCP *COMPT DIL 16 N2205
U 0007	264040510	CI INT LOG CMS*MC 14051BPC *MU-PLEX DIL 16 N2205
U 0008	264045841	CI INT LOG CMS*MC 14584BCP *DIVER DIL 14 MOTOR IMPER
U 0009	264040130	CI INT LOG CMS MC 14013BCP BISTA TO 116 N2205
U 0010	264040130	CI INT LOG CMS MC 14013BCP BISTA TO 116 N2205
U 0011	264040510	CI INT LOG CMS*MC 14051BPC *MU-PLEX DIL 16 N2205
U 0012	264040010	CI INT LOG CMS MC 14001BCP PORTE TO 116 N2205
U 0013	264040490	CI INT LOG CMS MC 14049UBCP DIVER DIL 16 N2205
U 0014	264040130	CI INT LOG CMS MC 14013BCP BISTA TO 116 N2205
U 0015	264040490	CI INT LOG CMS MC 14049UBCP DIVER DIL 16 N2205
U 0016	264040130	CI INT LOG CMS MC 14013BCP BISTA TO 116 N2205
U 0017	264040660	CI INT LOG CMS*MC 14066BCP *DIVER DIL 14 MOTOR
U 0018	264040010	CI INT LOG CMS MC 14001BCP PORTE TO 116 N2205
U 0019	264040130	CI INT LOG CMS MC 14013BCP BISTA TO 116 N2205
U 0020	264040660	CI INT LOG CMS*MC 14066BCP *DIVER DIL 14 MOTOR
U 0021	264040010	CI INT LOG CMS MC 14001BCP PORTE TO 116 N2205
U 0022	264045841	CI INT LOG CMS*MC 14584BCP *DIVER DIL 14 MOTOR IMPER
U 0023	264040130	CI INT LOG CMS MC 14013BCP BISTA TO 116 N2205

7 5277 8021 Circuit Z1 - Carte alimentation

REPERE TOPO.	COMPOSANT NO ARTICLE	COMPOSANT DESIGNATION
U 0024	261004740	CI INT LOG TTL*SN 74LS74N *BISTA DIL 14 N2206
U 0025	890100202	CI INTEGRE MEMOIRE U25 Z1 5220
U 0026	890100203	CI INTEGRE MEMOIRE U26 Z1 5220
U 0027	264040500	CI INT LOG CMS MC 14050BCP DIVER DIL 16 N2205
U 0028	260040930	CI INT LOG CMC*MC 14093BCP *PORTE DIL 14 MOTOR IMPER
U 0029	264040290	CI INT LOG CMS*MC 14029BCP *COMPT DIL 16 N2205
U 0030	264040510	CI INT LOG CMS*MC 14051BPC *MU-PLEX DIL 16 N2205
U 0031	264040500	CI INT LOG CMS MC 14050BCP DIVER DIL 16 N2205
U 0032	264040110	CI INT LOG CMS MC 14011BCP PORTE TO 116 N2205
U 0033	264040110	CI INT LOG CMS MC 14011BCP PORTE TO 116 N2205
U 0034	261004000	CI INT LOG TTL*SN 74LS00N *PORTE DIL 14 N2206
U 0035	260040930	CI INT LOG CMC*MC 14093BCP *PORTE DIL 14 MOTOR IMPER
U 0036	264040290	CI INT LOG CMS*MC 14029BCP *COMPT DIL 16 N2205
U 0037	264040510	CI INT LOG CMS*MC 14051BPC *MU-PLEX DIL 16 N2205
U 0038	264040500	CI INT LOG CMS MC 14050BCP DIVER DIL 16 N2205
U 0039	264040110	CI INT LOG CMS MC 14011BCP PORTE TO 116 N2205
U 0040	264040110	CI INT LOG CMS MC 14011BCP PORTE TO 116 N2205
U 0041	261004000	CI INT LOG TTL*SN 74LS00N *PORTE DIL 14 N2206
U 0042	265000812	CI INT LIN BIP*TL 081CP *AMP OP DIL 8 TEXAS
U 0043	264040760	CI INT LOG CMS MC 14076BCP BISTA DIL 16 N2205
U 0044	264040760	CI INT LOG CMS MC 14076BCP BISTA DIL 16 N2205
U 0045	264040760	CI INT LOG CMS MC 14076BCP BISTA DIL 16 N2205
U 0046	264040760	CI INT LOG CMS MC 14076BCP BISTA DIL 16 N2205
U 0047	264040760	CI INT LOG CMS MC 14076BCP BISTA DIL 16 N2205
U 0048	264040760	CI INT LOG CMS MC 14076BCP BISTA DIL 16 N2205

REPERE TOPO.	COMPOSANT NO ARTICLE	COMPOSANT DESIGNATION
U 0049	264040760	CI INT LOG CMS MC 14076BCP BISTA DIL 16 N2205
U 0050	264040760	CI INT LOG CMS MC 14076BCP BISTA DIL 16 N2205
U 0051	264040760	CI INT LOG CMS MC 14076BCP BISTA DIL 16 N2205
U 0052	264040760	CI INT LOG CMS MC 14076BCP BISTA DIL 16 N2205
U 0053	260040930	CI INT LOG CMC*MC 14093BCP *PORTE DIL 14 MOTOR IMPER
U 0054	264040290	CI INT LOG CMS*MC 14029BCP *COMPT DIL 16 N2205
U 0055	264040510	CI INT LOG CMS*MC 14051BPC *MU-PLEX DIL 16 N2205
U 0056	264040130	CI INT LOG CMS MC 14013BCP BISTA TO 116 N2205
U 0057	264040660	CI INT LOG CMS*MC 14066BCP *DIVER DIL 14 MOTOR
U 0058	264040810	CI INT LOG CMS MC 14081BCP PORTE DIL 14 N2205
U 0059	264040710	CI INT LOG CMS MC 14071BCP PORTE DIL 14 N2205
U 0060	264040110	CI INT LOG CMS MC 14011BCP PORTE TO 116 N2205
U 0061	264040250	CI INT LOG CMS MC 14025BCP PORTE DIL 14 N2205
U 0063	264040750	CI INT LOG CMS MC 14075BCP PORTE DIL 14 N2205
U 0064	264045841	CI INT LOG CMS*MC 14584BCP *DIVER DIL 14 MOTOR IMPER
U 0065	264040810	CI INT LOG CMS MC 14081BCP PORTE DIL 14 N2205
U 0066	264040110	CI INT LOG CMS MC 14011BCP PORTE TO 116 N2205
U 0067	265000812	CI INT LIN BIP*TL 081CP *AMP OP DIL 8 TEXAS
U 0068	265000812	CI INT LIN BIP*TL 081CP *AMP OP DIL 8 TEXAS

7 5277 4101 Circuit Z2 - Carte Y

COMPOSANT NO ARTICLE	COMPOSANT DESIGNATION
214429008	CONNEC LIMAND ACCES CONTACT A SERTIR 22 A 26 MOLEX 08-50-0185 7258-9011
214447439	CONNEC CARRE FIC FEM 1C SERT MINI PV BERG- 47649
214513115	CONNEC CI IMP EMB FEM 1C SOUD TEST 1 COMAT 312-1168-0-00400
227022015	BUS-BAR CI IMP V 1C 27,94 2BR PICO MEKTR M824-1-11
243800088	CABLE RUBAN 2C 3000HM 0,7X10,8 17 PF/M FILOT RUBAN3000HM
270304410	TRANST TRI DE 3 U441 /200104410
270600990	TRANST TRI DE 6 BFR99 /200100991
270642580	TRANST TRI DE 6 PN4258 /200142581
270642581	TRANST TRI DE 6 PN4258 /200142581
275314503	CI INT TRI DE 1 SL3145 CLASSE 1 /266431450
275314504	CI INT TRI DE 1 SL3145 CLASSE 2 /266431450
304302510	RONDEL DENTS DE 2,5X 5,5X 0,3 ACIER INOX N6333 NF-E27-618
304322032	RONDEL ONDUL 3,2X 6 X 0,4 CUPRO BERRYL NOMEL B-52030170
309102506	VIS C M 2,5X 6 ACIER INOX N6003 NF-E27-115
309103006	VIS C M 3 X 6 ACIER INOX N6003 NF-E27-115
313406251	ECROU SERTI M 2,5 0,8 A 1 ACIER CADM OTALU 3330-025- 0001
313406251	ECROU SERTI M 2,5 0,8 A 1 ACIER CADM OTALU 3330-025- 0001
652770810	SCHEMA PREAMPLI Y 5277
652770814	SCHEMA FINAL Y 5277
752241102	NOMEN S/E ENTREE Y VOIE B.C.D. 5224
752241103	NOMEN BLOC ENTREE Y VOIE A 5224
75277070201	RECAP CI Z2 AMPLI Y 5277
752771101	NOMEN VOIE A CI Z2 5277
752771111	NOMEN VOIE B CI Z2 5277
752771121	NOMEM VOIE C CI Z2 5277

REPERE TOPO.	COMPOSANT NO ARTICLE	COMPOSANT DESIGNATION
	752771141	NOMEN S/E FINAL Y 5277
	841012158MG	EQUERRE BLINDAGE INTERMEDIAIRE ENTREE Y 5224
	867512213	PLAQUETTE BLINDAGE AR.DE DECADE 5277
	867512214	PLAQUETTE BLINDAGE SUR CI Y 5277
	867542141	PLAQUETTE CACHE INTER 5072
	867542272	PLAQUETTE CACHE INTER COURTE 5220- 5224
	867542347	PLAQUETTE EPAISSEUR
W 0010	831500244	CORDON DE LIAISON 5277
W 0011	831500245	CORDON DE LIAISON 5277

7 5277 1011 Z2 (suite) Préampli voies A, B ou C

REPERE TOPO.	COMPOSANT NO ARTICLE	COMPOSANT DESIGNATION
	200240800	SUPP 8C DIL 8 SOUD CU-AL ETAME N2500
	200241400	SUPP 14C DIL 14 SOUD CU-AL ETAME N2500
	214421022	CONNEC CI IMP EMB FEM 2C SOUD PAS 254 MOLEX 38-00-1332 4455C/AAA
	214447330	CONNEC CI IMP EMB MAL 1C POST BERG- 47310
	214447331	CONNEC CI IMP EMB MAL 1C POST BERG- 47311
	227022015	BUS-BAR CI IMP V 1C 27,94 2BR PICO MEKTR M824-1-11
	252015051	GAINE RETRAC 4,7MM NOIR E.C.C MW 3/16
	302000011	CONNEC CI IMP EMB FEM 1C SOUD TEST BERG- 75315-012
	859044033	MANCHON RACCORD DE TJ 5224
	862554087MG	AXE RALLONGE TJ 5224
	899009752	PLAN DE MONTAGE MANCHON DE TJ 5224
C 0001	149101501	CAP 15 PF 5 % 500V CERAM 1 NO246
C 0002	154902151	CAP 3 PF 15 250V AJUST CERAM TUB STETT R-TRIKO- 310805500
C 0003	142870056	CAP 56 PF 2 % 100V CERAM 1 RAD 508 VITRA VP41BA 560-GB
C 0004	154901041	CAP 1 PF 4 250V AJUST CERAM TUB STETT R-TRIKO- 310906 120
C 0005	149100561	CAP 5,6 PF+-0,25P 500V CERAM 1 NO246
C 0006	142870133	CAP 330 PF 2 % 100V CERAM 1 RAD 508 VITRA VP41BA 331-GB
C 0007	149000825	CAP 8,2 PF+-0,25P 63V CERAM 1 508 NO245
C 0008	154907031	CAP 0,5 PF 3 250V AJUST CERAM TUB STETT R-TRIKO 313512020
C 0009	149414701	CAP 4700 PF-20+50 500V CERAM 2 NO243
C 0010	149010121	CAP 120 PF 5 % 63V CERAM 1 508 NO245
C 0011	145501410	CAP 0,1 MF-20+80 25V CERAM 3 RAD 508 LCC-- GFO 611 UB
C 0012	149321002	CAP10000 PF-20+100 63V CERAM 2 NO242
C 0013	145501410	CAP 0,1 MF-20+80 25V CERAM 3 RAD 508 LCC-- GFO 611 UB
C 0014	145501410	CAP 0,1 MF-20+80 25V CERAM 3 RAD 508 LCC-- GFO 611 UB

REPERE TOPO.	COMPOSANT NO ARTICLE	COMPOSANT DESIGNATION
C 0015	149321002	CAP10000 PF-20+100 63V CERAM 2 NO242
C 0016	149000825	CAP 8,2 PF+-0,25P 63V CERAM 1 508 NO245
C 0017	149003305	CAP 33 PF 5 % 63V CERAM 1 508 NO245
C 0018	149002705	CAP 27 PF 5 % 63V CERAM 1 508 NO245
C 0019	149005605	CAP 56 PF 5 % 63V CERAM 1 508 NO245
C 0021	149000335	CAP 3,3 PF+-0,25P 63V CERAM 1 508 NO245
C 0022	149000335	CAP 3,3 PF+-0,25P 63V CERAM 1 508 NO245
C 0023	151000188	CAP 3,9 PF 27 100V AJUST PTFE DAU-- 107-3901- 027
C 0024	149010331	CAP 330 PF 5 % 63V CERAM 1 508 NO245
C 0025	154902151	CAP 3 PF 15 250V AJUST CERAM TUB STETT R-TRIKO- 310805500
C 0026	145501410	CAP 0,1 MF-20+80 25V CERAM 3 RAD 508 LCC-- GFO 611 UB
C 0027	145501410	CAP 0,1 MF-20+80 25V CERAM 3 RAD 508 LCC-- GFO 611 UB
C 0028	156826010	CAP 10 MF-10+50 35V CHIMIC RAD 508 NO220
C 0029	145501410	CAP 0,1 MF-20+80 25V CERAM 3 RAD 508 LCC-- GFO 611 UB
C 0030	149321002	CAP10000 PF-20+100 63V CERAM 2 NO242
C 0040	149001005	CAP 10 PF 5 % 63V CERAM 1 508 NO245
C 0053	145501410	CAP 0,1 MF-20+80 25V CERAM 3 RAD 508 LCC-- GFO 611 UB
C 0058	164501447	CAP 4,7 MF-20+50 35V TANTAL GOUT NO203
C 0059	149001805	CAP 18 PF 5 % 63V CERAM 1 508 NO245
CR0003	200455051	DIOD ZENER *BZX 55 * 5,1V 5,0MA SESCO INDIC
CR0004	200744840	DIOD LUMIN 3 MM ROUGE HP--- HLMP-1000 5082-4480
CR0005	200342440	DIOD SPCIAL* 1N4244 * 20 V SWITC SESCO INDIC
CR0006	200342440	DIOD SPCIAL* 1N4244 * 20 V SWITC SESCO INDIC
CR0007	200342440	DIOD SPCIAL* 1N4244 * 20 V SWITC SESCO INDIC
CR0008	200342440	DIOD SPCIAL* 1N4244 * 20 V SWITC SESCO INDIC

7 5277 1011 Z2 (suite) Préampli voies A, B ou C

REPERE TOPO.	COMPOSANT NO ARTICLE	COMPOSANT DESIGNATION
CR0009	200707001	DIOD LUMIN 3 MM VERTE 2,30 SIEMS CQV35E
L 0001	212600100	ACCES MAGN PERLE 3,7X1,2X3,5-4A1 FEROX RTC-- 4322-020- 34410
L 0002	212600100	ACCES MAGN PERLE 3,7X1,2X3,5-4A1 FEROX RTC-- 4322-020- 34410
L 0003	212600100	ACCES MAGN PERLE 3,7X1,2X3,5-4A1 FEROX RTC-- 4322-020- 34410
Q 0001	652770061	TRANST DISTRIB Q1 Z2 /270304410
Q 0002	652200068	TRANST DISTRIB Q2 Q3 Z2 VOIE ABC/270600990
Q 0003	652200068	TRANST DISTRIB Q2 Q3 Z2 VOIE ABC/270600990
Q 0004	652770062	TRANST DISTRIB Q4 Q5 CI Z2 /270642581
Q 0005	652770062	TRANST DISTRIB Q4 Q5 CI Z2 /270642581
Q 0006	652200069	TRANST DISTRIB Q6 Q7 CI Z2 /270642580
Q 0007	652200069	TRANST DISTRIB Q6 Q7 CI Z2 /270642580
Q 0008	200109790	TRANST LP SI P*BF 979 * SOT 37 RTC--
R 0001	016400390	RES 39 OHM 5 % 0,25W CARBON N0102
R 0002	075363898	RES 898 K 0,5 % 0,5 W METAL 25 PPM DRALR SMA 0411
R 0003	041321110	RES 111 K 1 % 0,25W METAL 50 PPM N0112 VALEUR SPE
R 0004	016400100	RES 10 OHM 5 % 0,25W CARBON N0102
R 0005	075363988	RES 988 K 0,5 % 0,5 W METAL 25 PPM DRALR SMA 0411
R 0006	016400150	RES 15 OHM 5 % 0,25W CARBON N0102
R 0007	041320101	RES 10,1 K 1 % 0,25W METAL 50 PPM N0112 VALEUR SPE
R 0008	016400470	RES 47 OHM 5 % 0,25W CARBON N0102
R 0009	016400180	RES 18 OHM 5 % 0,25W CARBON N0102
R 0010	016401200	RES 120 OHM 5 % 0,25W CARBON N0102
R 0011	016401500	RES 150 OHM 5 % 0,25W CARBON N0102
R 0012	075344100	RES 1 M 1 % 0,5 W METAL 50 PPM DRALR SMA 0411
R 0013	033633447	RES 470 K 5 % 0,5 W CARBON ALLEN EB

REPERE TOPO.	COMPOSANT NO ARTICLE	COMPOSANT DESIGNATION
R 0014	016420180	RES 18 K 5 % 0,25W CARBON N0102
R 0015	105415310	POT 10 K 20%A CAR TRIM PLAQ VER CI PIHER PT10MXH(S) AXE 5012
R 0016	016402200	RES 220 OHM 5 % 0,25W CARBON N0102
R 0017	016401000	RES 100 OHM 5 % 0,25W CARBON N0102
R 0018	016401000	RES 100 OHM 5 % 0,25W CARBON N0102
R 0019	041303320	RES 332 OHM 1 % 0,25W METAL 50 PPM N0112
R 0020	016703600	RES 360 OHM 5 % 0,5 W METAL RTC-- SFR 30
R 0021	041310536	RES 5,36 K 1 % 0,25W METAL 50 PPM N0112
R 0022	016410300	RES 3,0 K 5 % 0,25W CARBON N0102
R 0023	016401000	RES 100 OHM 5 % 0,25W CARBON N0102
R 0024	016422200	RES 220 K 5 % 0,25W CARBON N0102
R 0025	108600247	POT 4,7K 20%A CER TRIM ROND HOR 0,75W CI SFERN T7YB
R 0026	897500308	POTC DBCS+INT 10KAV 20/%A +10KAR 20%C CI RUWID 0811-301E
R 0027	016400820	RES 82 OHM 5 % 0,25W CARBON N0102
R 0028	016400390	RES 39 OHM 5 % 0,25W CARBON N0102
R 0029	016423600	RES 360 K 5 % 0,25W CARBON N0102
R 0030	108600410	POT 100 K 20%A CER TRIM ROND HOR 0,75W CI SFERN T7YB
R 0031	041308660	RES 866 OHM 1 % 0,25W METAL 50 PPM N0112
R 0032	041308660	RES 866 OHM 1 % 0,25W METAL 50 PPM N0112
R 0033	041304990	RES 499 OHM 1 % 0,25W METAL 50 PPM N0112
R 0034	041304990	RES 499 OHM 1 % 0,25W METAL 50 PPM N0112
R 0035	041306810	RES 681 OHM 1 % 0,25W METAL 50 PPM N0112
R 0036	016401000	RES 100 OHM 5 % 0,25W CARBON N0102
R 0037	016421000	RES 100 K 5 % 0,25W CARBON N0102
R 0038	108600310	POT 10 K 20%A CER TRIM ROND HOR 0,75W CI SFERN T7YB

7 5277 1011 Z2 (suite) Préampli voies A, B ou C

REPERE TOPO.	COMPOSANT NO ARTICLE	COMPOSANT DESIGNATION
R 0039	016400100	RES 10 OHM 5 % 0,25W CARBON NO102
R 0040	016410200	RES 2,0 K 5 % 0,25W CARBON NO102
R 0041	016410200	RES 2,0 K 5 % 0,25W CARBON NO102
R 0042	016410150	RES 1,5 K 5 % 0,25W CARBON NO102
R 0043	016420510	RES 51 K 5 % 0,25W CARBON NO102
R 0044	016410470	RES 4,7 K 5 % 0,25W CARBON NO102
R 0045	016400470	RES 47 OHM 5 % 0,25W CARBON NO102
R 0046	016400470	RES 47 OHM 5 % 0,25W CARBON NO102
R 0047	108600122	POT 220 U 20%A CER TRIM ROND HOR 0,75W CI SFERN T7YB
R 0048	041310130	RES 1,3 K 1 % 0,25W METAL 50 PPM NO112
R 0049	041310130	RES 1,3 K 1 % 0,25W METAL 50 PPM NO112
R 0050	041301000	RES 100 OHM 1 % 0,25W METAL 50 PPM NO112
R 0051	016402000	RES 200 OHM 5 % 0,25W CARBON NO102
R 0052	016402000	RES 200 OHM 5 % 0,25W CARBON NO102
R 0053	041309090	RES 909 OHM 1 % 0,25W METAL 50 PPM NO112
R 0054	041309090	RES 909 OHM 1 % 0,25W METAL 50 PPM NO112
R 0055	108600147	POT 470 U 20%A CER TRIM ROND HOR 0,75W CI SFERN T7YB
R 0056	041320140	RES 14 K 1 % 0,25W METAL 50 PPM NO112
R 0057	041302800	RES 280 OHM 1 % 0,25W METAL 50 PPM NO112
R 0058	016400200	RES 20 OHM 5 % 0,25W CARBON NO102
R 0059	016400200	RES 20 OHM 5 % 0,25W CARBON NO102
R 0060	016410330	RES 3,3 K 5 % 0,25W CARBON NO102
R 0061	016410330	RES 3,3 K 5 % 0,25W CARBON NO102
R 0062	016421000	RES 100 K 5 % 0,25W CARBON NO102
R 0063	016421000	RES 100 K 5 % 0,25W CARBON NO102
R 0064	016410300	RES 3,0 K 5 % 0,25W CARBON NO102
R 0065	016400470	RES 47 OHM 5 % 0,25W CARBON NO102
RR0001	889200015	RESIST.RESEAU POUR AMPLI Y 5220-5224
RR0002	889200021	RESEAU DE 5 RESISTANCES CARTE Y 5220-24-77
RT0006	088900147	RES N/LIN CIN 470 U 10% 0,5 W DISC RTC-- 2322 642 62471
S 0001	892500128	COMMUTATEUR ATTENUATEUR 5224
S 0002	218112205	COMMUT LEVIE 2P UNI INV CI APR-- TW 36CD
S 0003	210401275	COMMUT POUSS 1TOU 2P 2C 0,1 A INDEP PROF JEANR TJMY INDEP NCC
U 0001	266431450	CI INT LIN BIP*SL 3145C-DG*DIVER DIL 14 PLESS
U 0002	652770068	DISTRIB U2 CI Z2 /275314502 5277
U 0003	265000820	CI INT LIN BIP TL 082CP AMP OP DIL 8 TEXAS

7 5277 1101 Z2 (suite) Préampli voies A seulement

REPERE TOPO.	COMPOSANT NO ARTICLE	COMPOSANT DESIGNATION
	652770810	SCHEMA PREAMPLI Y 5277
	752771011	NOMEN PREAMPLI Y -5277-
C 0031	145501410	CAP 0,1 MF-20+80 25V CERAM 3 RAD 508 LCC-- GFO 611 UB
C 0032	149321002	CAP10000 PF-20+100 63V CERAM 2 NO242
C 0033	149000565	CAP 5,6 PF+-0,25P 63V CERAM 1 508 NO245
C 0060	145501410	CAP 0,1 MF-20+80 25V CERAM 3 RAD 508 LCC-- GFO 611 UB
CR0010	200455051	DIOD ZENER *BZX 55 * 5,1V 5,0MA SESCO INDIC
R 0066	041301000	RES 100 OHM 5 % 0,25W CARBON NO102
R 0067	041320365	RES 36,5 K 1 % 0,25W METAL 50 PPM NO112
R 0068	016408200	RES 820 OHM 5 % 0,25W CARBON NO102
R 0069	041320100	RES 10 K 1 % 0,25W METAL 50 PPM NO112

7 5277 1111 Voie B

C0033	141321002	10pF ajustable
R0066	041301000	100 OHM

7 5277 1121 Voie C

C0071	141321002	10pF ajustable
R0144	041301000	100 OHM

7 5277 1141 Z2 (suite) Final Y

REPERE TOPO.	COMPOSANT NO ARTICLE	COMPOSANT DESIGNATION
	200270932	RADIAT ACCES RONDELLE 8,5X 3,3X1,6 AL 203 JERMY A26-2003
	214447796	CONNEC CI IMP FIC FEM IC POST PV VER BERG- 75302-001
	270200510	TRANST TRI DE 2 BFT51 /200100512 RTC-- INDIC
	270200905	TRANST TRI DE 2 BFY90 /200100907
	270204491	TRANST TRI DE 2 BFQ 24 /200104491 RTC-- INDIC
	270238661	TRANST TRI DE 2 2N3866 /200138660
	270242589	TRANST TRI DE 2 PN4258 /200142581
	304002050	RONDEL PLAT 2,6X 5 X 0,5 LAITN NICK MFOM- 1C
	309102525	VIS C M 2,5X25 ACIER INOX N6003 NF-E27-115
	313406250	ECROU SERTI M 2,5 1,5 ET + ACIER CADM OTALU RC 3330- 0250002
	345000150	COLUNE ROND 5 X15 3,2 LAITN JEANR EN 15
	376000343	RADIAT TO 18 ALUMI H=19 SEEM- CO 343/2
	376003430	RADIAT TO 5 ALUMI H=12,9 SEEM- CO 343/1
	376003432	RADIAT TO 5 ALUMI H=19 SEEM- CO 343
	652770814	SCHEMA FINAL Y 5277
	876024037MG	RADIATEUR CI Y 5224
	882041004	SUPPORT TRANS GM
	882041005	SUPPORT TRANS PM
C 0034	149001805	CAP 18 PF 5 % 63V CERAM 1 508 NO245
C 0035	149001805	CAP 18 PF 5 % 63V CERAM 1 508 NO245
C 0036	145501410	CAP 0,1 MF-20+80 25V CERAM 3 RAD 508 LCC-- GFO 611 UB
C 0038	151000180	CAP 2 PF 9 100V AJUST PTFE DAU-- 107-1901- 009
C 0039	149001805	CAP 18 PF 5 % 63V CERAM 1 508 NO245
C 0041	149010101	CAP 100 PF 5 % 63V CERAM 1 508 NO245
C 0042	156825047	CAP 47 MF-10+50 35V CHIMIC RAD 508 NO220

REPERE TOPO.	COMPOSANT NO ARTICLE	COMPOSANT DESIGNATION
C 0043	156838947	CAP 4,7 MF-10+50 63V CHIMIC RAD 508 NO220
C 0044	170531002	CAP 0,1 MF 10 % 250V POLYEST NO263
C 0045	170531002	CAP 0,1 MF 10 % 250V POLYEST NO263
C 0047	151000188	CAP 3,9 PF 27 100V AJUST PTFE DAU-- 107-3901- 027
C 0049	170524701	CAP47000 PF 20 % 250V POLYEST NO263
C 0050	145501410	CAP 0,1 MF-20+80 25V CERAM 3 RAD 508 LCC-- GFO 611 UB
C 0051	145501410	CAP 0,1 MF-20+80 25V CERAM 3 RAD 508 LCC-- GFO 611 UB
C 0054	149000825	CAP 8,2 PF+-0,25P 63V CERAM 1 508 NO245
C 0055	149000825	CAP 8,2 PF+-0,25P 63V CERAM 1 508 NO245
C 0056	149000395	CAP 3,9 PF+-0,25P 63V CERAM 1 508 NO245
C 0057	156826010	CAP 10 MF-10+50 35V CHIMIC RAD 508 NO220
C 0059	149321002	CAP10000 PF-20+100 63V CERAM 2 NO242
C 0063	151000180	CAP 2 PF 9 100V AJUST PTFE DAU-- 107-1901- 009
C 0064	145501410	CAP 0,1 MF-20+80 25V CERAM 3 RAD 508 LCC-- GFO 611 UB
C 0065	149010101	CAP 100 PF 5 % 63V CERAM 1 508 NO245
C 0066	149000685	CAP 6,8 PF+-0,25P 63V CERAM 1 508 NO245
C 0067	151000188	CAP 3,9 PF 27 100V AJUST PTFE DAU-- 107-3901- 027
C 0068	145501410	CAP 0,1 MF-20+80 25V CERAM 3 RAD 508 LCC-- GFO 611 UB
C 0069	149000105	CAP 1 PF+-0,25P 63V CERAM 1 508 NO245
C 0070	149000105	CAP 1 PF+-0,25P 63V CERAM 1 508 NO245
C 0072	156826010	CAP 10 MF-10+50 35V CHIMIC RAD 508 NO220
CR0011	200342440	DIOD SPCIAL* 1N4244 * 20 V SWITC SESCO INDIC
CR0012	200342440	DIOD SPCIAL* 1N4244 * 20 V SWITC SESCO INDIC
CR0013	200455056	DIOD ZENER *BZX 55 * 5,6V 5,0MA SESCO INDIC
CR0014	200342440	DIOD SPCIAL* 1N4244 * 20 V SWITC SESCO INDIC

7 5277 1141 Z2 (suite) Final Y

REPERE TOPO.	COMPOSANT N° ARTICLE	COMPOSANT DESIGNATION
CR0015	200342440	DIOD SPCIAL* 1N4244 * 20 V SWITC SESCO INDIC
CR0016	200340048	DIOD REDRES* 1N4004 *400 V 1*0 A EXCLU
CR0017	200340048	DIOD REDRES* 1N4004 *400 V 1*0 A EXCLU
K 0001	210901203	RELAIS REED 12V 10W 1000 OHM 1C T DIP CELDU D31A51 10
L 0004	872530485	SELF AMPLI Y -5277-
L 0005	872530485	SELF AMPLI Y -5277-
L 0006	212600100	ACCES MAGN PERLE 3,7X1,2X3,5-4A1 FEROX RTC-- 4322-020- 34410
Q 0011	652240064	TRANST DISTRIB Q11 Q12 CI Z2 /270242589
Q 0012	652240064	TRANST DISTRIB Q11 Q12 CI Z2 /270242589
Q 0013	652240065	TRANST DISTRIB Q13 Q14 CI Z2 /270242589
Q 0014	652240065	TRANST DISTRIB Q13 Q14 CI Z2 /270242589
Q 0015	200102142	TRANST LP SI P*BC 214 * X 55 N2081 INDIC
Q 0016	200102142	TRANST LP SI P*BC 214 * X 55 N2081 INDIC
Q 0017	652770060	TRANST DISTRIB Q17 Q18 CI Z2 /270204491
Q 0018	652770060	TRANST DISTRIB Q17 Q18 CI Z2 /270204491
Q 0023	652240067	TRANST DISTRIB Q23 Q24 CI Z2 /270200510
Q 0024	652240067	TRANST DISTRIB Q23 Q24 CI Z2 /270200510
Q 0025	652240068	TRANST DISTRIB Q25 Q26 CI Z2 /270238661
Q 0026	652240068	TRANST DISTRIB Q25 Q26 CI Z2 /270238661
Q 0027	652770066	TRANST DISTRIB Q27 Q28 CI Z2 /270200905
Q 0028	652770065	TRANST DISTRIB Q29 Q30 CI Z2 /270200905
Q 0029	652770066	TRANST DISTRIB Q27 Q28 CI Z2 /270200905
Q 0030	652770065	TRANST DISTRIB Q29 Q30 CI Z2 /270200905
R 0071	041301370	RES 137 OHM 1 % 0,25W METAL 50 PPM N0112
R 0072	041320280	RES 28 K 1 % 0,25W METAL 50 PPM N0112

REPERE TOPO.	COMPOSANT N° ARTICLE	COMPOSANT DESIGNATION
R 0073	016420130	RES 13 K 5 % 0,25W CARBON N0102
R 0074	105914700	POT 4,7K 20%A CER TRIM PLAQ HOR CI N0332
R 0075	041309310	RES 931 OHM 1 % 0,25W METAL 50 PPM N0112
R 0076	041309310	RES 931 OHM 1 % 0,25W METAL 50 PPM N0112
R 0077	041304990	RES 499 OHM 1 % 0,25W METAL 50 PPM N0112
R 0078	041304990	RES 499 OHM 1 % 0,25W METAL 50 PPM N0112
R 0080	016400510	RES 51 OHM 5 % 0,25W CARBON N0102
R 0081	016431000	RES 1,0 M 5 % 0,25W CARBON N0102
R 0082	041302800	RES 280 OHM 1 % 0,25W METAL 50 PPM N0112
R 0083	041310150	RES 1,5 K 1 % 0,25W METAL 50 PPM N0112
R 0084	041310150	RES 1,5 K 1 % 0,25W METAL 50 PPM N0112
R 0085	016707500	RES 750 OHM 5 % 0,5 W CARBON N0106
R 0086	016707500	RES 750 OHM 5 % 0,5 W CARBON N0106
R 0087	041310221	RES 2,21 K 1 % 0,25W METAL 50 PPM N0112
R 0088	041300432	RES 43,2 OHM 1 % 0,25W METAL 50 PPM N0112
R 0089	041300432	RES 43,2 OHM 1 % 0,25W METAL 50 PPM N0112
R 0090	016403900	RES 390 OHM 5 % 0,25W CARBON N0102
R 0091	016403900	RES 390 OHM 5 % 0,25W CARBON N0102
R 0092	041300562	RES 56,2 OHM 1 % 0,25W METAL 50 PPM N0112
R 0093	041300562	RES 56,2 OHM 1 % 0,25W METAL 50 PPM N0112
R 0094	041304420	RES 442 OHM 1 % 0,25W METAL 50 PPM N0112
R 0095	041304420	RES 442 OHM 1 % 0,25W METAL 50 PPM N0112
R 0096	016403300	RES 330 OHM 5 % 0,25W CARBON N0102
R 0097	106002200	POT 220 U 20%A CER TRIM PLAQ VER CI N0332
R 0098	105900220	POT 22 U 20%A CER TRIM PLAQ HOR CI N0332

7 5277 1141 Z2 (suite) Final Y

REPERE TOPO.	COMPOSANT N° ARTICLE	COMPOSANT DESIGNATION
R 0099	016400560	RES 56 OHM 5 % 0,25W CARBON NO102
R 0100	041303010	RES 301 OHM 1 % 0,25W METAL 50 PPM NO112
R 0101	041303010	RES 301 OHM 1 % 0,25W METAL 50 PPM NO112
R 0102	041304990	RES 499 OHM 1 % 0,25W METAL 50 PPM NO112
R 0103	041304990	RES 499 OHM 1 % 0,25W METAL 50 PPM NO112
R 0104	016400100	RES 10 OHM 5 % 0,25W CARBON NO102
R 0105	016400100	RES 10 OHM 5 % 0,25W CARBON NO102
R 0108	041302210	RES 221 OHM 1 % 0,25W METAL 50 PPM NO112
R 0109	016409001	RES 0,01 OHM POUR STRAPPAGE TRW-- ZEROHM
R 0111	016410240	RES 2,4 K 5 % 0,25W CARBON NO102
R 0112	041301000	RES 100 OHM 1 % 0,25W METAL 50 PPM NO112
R 0113	016422000	RES 200 K 5 % 0,25W CARBON NO102
R 0117	016410510	RES 5,1 K 5 % 0,25W CARBON NO102
R 0120	041301500	RES 150 OHM 1 % 0,25W METAL 50 PPM NO112
R 0121	041301500	RES 150 OHM 1 % 0,25W METAL 50 PPM NO112
R 0122	016410120	RES 1,2 K 5 % 0,25W CARBON NO102
R 0123	016400220	RES 22 OHM 5 % 0,25W CARBON NO102
R 0125	041302210	RES 221 OHM 1 % 0,25W METAL 50 PPM NO112
R 0126	016421000	RES 100 K 5 % 0,25W CARBON NO102
R 0127	066009270	RES 27 OHM 5 % 1,5 W METAL NO121
R 0129	075349243	RES 24,3 OHM 1 % 0,7 W METAL 50 PPM ROEDE MK 4
R 0131	075349243	RES 24,3 OHM 1 % 0,7 W METAL 50 PPM ROEDE MK 4
R 0132	108600110	POT 100 U 20%A CER TRIM ROND HOR 0,75W CI SFERN T7YB
R 0136	016700100	RES 10 OHM 5 % 0,5 W CARBON NO106
R 0137	035473143	RES 430 OHM 5 % 7 W METAL SOVCO FP7

REPERE TOPO.	COMPOSANT N° ARTICLE	COMPOSANT DESIGNATION
R 0138	035473143	RES 430 OHM 5 % 7 W METAL SOVCO FP7
R 0141	016400100	RES 10 OHM 5 % 0,25W CARBON NO102
R 0142	016400100	RES 10 OHM 5 % 0,25W CARBON NO102
R 0143	108600122	POT 220 U 20%A CER TRIM ROND HOR 0,75W CI SFERN T7YB
RR0003	087813340	RESEAU RES 10 K 4 2 % IDEN SIL 8 SFERN SIL8-4
RR0004	087813319	RESEAU RES 4,7 K 4 2 % IDEN SIL 8 SFERN SIL8-4
RT0001	089705410	RES N/LIN CTN 100 K 10% 0,5 W DISC RTC-- 2322 642 62104
RT0003	089705410	RES N/LIN CTN 100 K 10% 0,5 W DISC RTC-- 2322 642 62104
RT0005	089705122	RES N/LIN CTN 220 U 10% 0,5 W DISC RTC-- 2322 642 62221

7 5224 9151

Circuit Z3 - Carte X

COMPOSANT NO ARTICLE	COMPOSANT DESIGNATION
200240800	SUPP 8C DIL 8 SOUD CU-AL ETAME N2500
200241400	SUPP 14C DIL 14 SOUD CU-AL ETAME N2500
200241600	SUPP 16C DIL 16 SOUD CU-AL ETAME N2500
200242400	SUPP 24C DIL 24 SOUD CU-AL ETAME N2500
214429002	CONNEC LIMAND ACCES CONTACT MAL A SERTIR MOLEX 02-09-2103-1190-TL
214429042	CONNEC LIMAND ACCES BOITIER MAL 4C SS OREIL MOLEX 03-09-2042-1490-P1
214447330	CONNEC CI IMP EMB MAL 1C POST BERG- 47310
214447331	CONNEC CI IMP EMB MAL 1C POST BERG- 47311
214447337	CONNEC CI IMP EMB MAL 1C POST BERG- 47317
214447796	CONNEC CI IMP FIC FEM 1C POST PV VER BERG- 75302-001
220401004	FUSIBLE SUPPRT PINCE 5 LAITN ETAME PICO MFOM- 0270090- 919A
238502000	CABLE ORDIN 1C S 0,60 2,5 BLAN MAREU ELECTROAIR NI 19X0,2
250500400	GAINE PVC 4 MM NOIR CFI-- PVC 40/10
252000301	GAINE RETRAC 4,8MM NOIR RAYCH RNF1003/16 NOIR
300101290	CABLA COSSE CI IMP PICO 2,8 LAITN ETAME LOUPO E 129/5
309603004	VIS HC M 3 X 4 CUV ACIER N6073 NF-E27-162
652240815	SCHEMA ELECTRIQUE SYNCHRO B1 5224
652240816	SCHEMA ELECTRIQUE VOLTMETRE 5224
652240817	SCHEMA ELECTRIQUE COMMUTATEUR B1 5224
652240818	SCHEMA ELECTRIQUE COMMUTATEUR B2 5224
652240819	SCHEMA ELECTRIQUE BASE DE TEMPS B1 5224
652240820	SCHEMA ELECTRIQUE BASE DE TEMPS B2 5224
652240821	SCHEMA ELECTRIQUE COMMUTATION B1 B2 5224
652240822	SCHEMA ELECTRIQUE AMPLI X 5224
652240823	SCHEMA ELECTRIQUE VOLTMETRE 5224

REPERE TOPOL.	COMPOSANT NO ARTICLE	COMPOSANT DESIGNATION
	690152240	LISTING PROGRAMMATION DISQUETTE 5224
	859024001	MANCHON RACCORD AXE
	859024005	MANCHON RACCORD POT 5221
	862524022MG	AXE PROLONGATEUR POT - 5220-5224
	862554088MG	AXE RALLONGE POT 5224
C 0001	149102201	CAP 22 PF 5 % 500V CERAM 1 NO246
C 0002	149321002	CAP10000 PF-20+100 63V CERAM 2 NO242
C 0003	149314702	CAP 4700 PF-20+80 63V CERAM 2 NO242
C 0004	156604737	CAP 4,7 MF-20+100 63V CHIMIC NO221
C 0005	156604737	CAP 4,7 MF-20+100 63V CHIMIC NO 221
C 0006	149001005	CAP 10 PF 5% CERAMI NO 246
C 0007	149321002	CAP10000 PF-20+100 63V CERAM 2 NO242
C 0008	164501410	CAP 1 MF-20+50 35V TANTAL GOUT NO203
C 0009	164501410	CAP 1 MF-20+50 35V TANTAL GOUT NO203
C 0010	149321002	CAP10000 PF-20+100 63V CERAM 2 NO242
C 0011	149321002	CAP10000 PF-20+100 63V CERAM 2 NO242
C 0012	142636410	CAP 0,1 MF 20 % 50V CERAM 2 RAD LCC-- UDZ 905FA
C 0013	164501533	CAP 33 MF-20+50 10V TANTAL GOUT NO203
C 0014	149003685	CAP 6,8 PF+-0,25P 63V CERAM 1 508 NO245
C 0015	149321002	CAP10000 PF-20+100 63V CERAM 2 NO242
C 0016	156838947	CAP 4,7 MF-10+50 63V CHIMIC RAD 508 NO220
C 0017	149321002	CAP10000 PF-20+100 63V CERAM 2 NO242
C 0018	145501410	CAP 0,1 MF-20+80 25V CERAM 3 RAD 508 LCC-- GFO 611 UB
C 0019	149321002	CAP10000 PF-20+100 63V CERAM 2 NO242
C 0020	190002210	CAP 1000 PF 2,5% 160V POLYPRO AX ROEDE KP1838-210-16-3
C 0021	176743310	CAP10000 PF 5 % 160V POLYEST RAD 1016 RIFA- PHE 244 HA 510J

7 5224 9151

Circuit Z3 - Carte X

REPERE TOPO.	COMPOSANT NO ARTICLE	COMPOSANT DESIGNATION
C 0022	176834410	CAP 0,1 MF 10 % 100V POLYEST RAD 1016 RIFA- PHE 353 DA 610K
C 0023	177338610	CAP 10 MF 5 % 63V POLYEST RAD 2750 WIMA- MKS4
C 0024	182733082	CAP 82 PF 2,5% 160V POLYSTY AX SIEMS B31063-B1820-H
C 0025	151000188	CAP 3,9 PF 27 100V AJUST PTFE DAU-- 107-3901- 027
C 0026	177330347	CAP47000 PF 10 % 63V POLYEST RAD 508 WIMA- MKS2
C 0027	156838947	CAP 4,7 MF-10+50 63V CHIMIC RAD 508 NO220
C 0028	149211801	CAP 1800 PF 10 % 500V CERAM 2 NO243
C 0030	145501410	CAP 0,1 MF-20+80 25V CERAM 3 RAD 508 LCC-- GFO 611 UB
C 0031	149511005	CAP 1000 PF 10 % 63V CERAM 2 NO242
C 0032	145501410	CAP 0,1 MF-20+80 25V CERAM 3 RAD 508 LCC-- GFO 611 UB
C 0033	145501410	CAP 0,1 MF-20+80 25V CERAM 3 RAD 508 LCC-- GFO 611 UB
C 0034	176743310	CAP10000 PF 5 % 160V POLYEST RAD 1016 RIFA- PHE 244 HA 510J
C 0035	176743510	CAP 1 MF 5 % 160V POLYEST RAD 2794 RIFA- PHE 244 HG 710J
C 0036	182733082	CAP 82 PF 2,5% 160V POLYSTY AX SIEMS B31063-B1820-H
C 0037	151000188	CAP 3,9 PF 27 100V AJUST PTFE DAU-- 107-3901- 027
C 0038	145501410	CAP 0,1 MF-20+80 25V CERAM 3 RAD 508 LCC-- GFO 611 UB
C 0039	156826010	CAP 10 MF-10+50 35V CHIMIC RAD 508 NO220
C 0040	145501410	CAP 0,1 MF-20+80 25V CERAM 3 RAD 508 LCC-- GFO 611 UB
C 0041	149314702	CAP 4700 PF-20+80 63V CERAM 2 NO242
C 0043	149003305	CAP 33 PF 5 % 63V CERAM 1 508 NO245
C 0045	149010101	CAP 100 PF 5 % 63V CERAM 1 508 NO245
C 0046	156826010	CAP 10 MF-10+50 35V CHIMIC RAD 508 NO220
C 0047	149002705	CAP 27 PF 5 % 63V CERAM 1 508 NO245
C 0048	156826010	CAP 10 MF-10+50 35V CHIMIC RAD 508 NO220
C 0049	145501410	CAP 0,1 MF-20+80 25V CERAM 3 RAD 508 LCC-- GFO 611 UB

REPERE TOPO.	COMPOSANT NO ARTICLE	COMPOSANT DESIGNATION
C 0050	149010101	CAP 100 PF 5 % 63V CERAM 1 508 NO245
C 0051	149010221	CAP 220 PF 5 % 63V CERAM 1 508 NO245
C 0052	190010210	CAP 1000 PF 5 % 630V POLYPRO RAD 508 ROEDE KP1837-210-63-4
C 0053	145501410	CAP 0,1 MF-20+80 25V CERAM 3 RAD 508 LCC-- GFO 611 UB
C 0054	149002705	CAP 27 PF 5 % 63V CERAM 1 508 NO245
C 0055	149010221	CAP 220 PF 5 % 63V CERAM 1 508 NO245
C 0056	149003205	CAP 82 PF 5 % 63V CERAM 1 508 NO245
C 0057	156838947	CAP 4,7 MF-10+50 63V CHIMIC RAD 508 NO220
C 0058	145501410	CAP 0,1 MF-20+80 25V CERAM 3 RAD 508 LCC-- GFO 611 UB
C 0059	149000275	CAP 2,7 PF+-0,25P 63V CERAM 1 508 NO245
C 0060	149004705	CAP 47 PF 5 % 63V CERAM 1 508 NO245
C 0061	149314702	CAP 4700 PF-20+80 63V CERAM 2 NO242
C 0062	149324701	CAP47000 PF-20+80 63V CERAM 2 NO242 02
C 0063	145501410	CAP 0,1 MF-20+80 25V CERAM 3 RAD 508 LCC-- GFO 611 UB
C 0064	145501410	CAP 0,1 MF-20+80 25V CERAM 3 RAD 508 LCC-- GFO 611 UB
C 0065	145501410	CAP 0,1 MF-20+80 25V CERAM 3 RAD 508 LCC-- GFO 611 UB
C 0066	149004705	CAP 47 PF 5 % 63V CERAM 1 508 NO245
C 0067	149010101	CAP 100 PF 5 % 63V CERAM 1 508 NO245
C 0068	149314702	CAP 4700 PF-20+80 63V CERAM 2 NO242
C 0069	145501410	CAP 0,1 MF-20+80 25V CERAM 3 RAD 508 LCC-- GFO 611 UB
C 0070	145501410	CAP 0,1 MF-20+80 25V CERAM 3 RAD 508 LCC-- GFO 611 UB
C 0071	149002205	CAP 22 PF 5 % 63V CERAM 1 508 NO245
C 0072	145501410	CAP 0,1 MF-20+80 25V CERAM 3 RAD 508 LCC-- GFO 611 UB
C 0073	145501410	CAP 0,1 MF-20+80 25V CERAM 3 RAD 508 LCC-- GFO 611 UB
C 0077	149321002	CAP10000 PF-20+100 63V CERAM 2 NO242

7 5224 9151 Circuit Z3 - Carte X

REPERE TOPO.	COMPOSANT N° ARTICLE	COMPOSANT DESIGNATION
C 0078	149000155	CAP 1,5 PF+-0,25P 63V CERAM 1 508 N0245
C 0079	145501410	CAP 0,1 MF-20+80 25V CERAM 3 RAD 508 LCC-- GFO 611 UB
C 0080	145501410	CAP 0,1 MF-20+80 25V CERAM 3 RAD 508 LCC-- GFO 611 UB
C 0081	149000155	CAP 1,5 PF+-0,25P 63V CERAM 1 508 N0245
C 0082	145501410	CAP 0,1 MF-20+80 25V CERAM 3 RAD 508 LCC-- GFO 611 UB
C 0083	149010101	CAP 100 PF 5 % 63V CERAM 1 508 N0245
C 0084	145501410	CAP 0,1 MF-20+80 25V CERAM 3 RAD 508 LCC-- GFO 611 UB
C 0085	145501410	CAP 0,1 MF-20+80 25V CERAM 3 RAD 508 LCC-- GFO 611 UB
C 0086	145501410	CAP 0,1 MF-20+80 25V CERAM 3 RAD 508 LCC-- GFO 611 UB
C 0087	156807210	CAP 1000 MF-10+50 10V CHIMIC RAD 508 ITT-- EN 12-35-X
C 0088	145501410	CAP 0,1 MF-20+80 25V CERAM 3 RAD 508 LCC-- GFO 611 UB
C 0089	156826010	CAP 10 MF-10+50 35V CHIMIC RAD 508 N0220
C 0091	149008205	CAP 82 PF 5 % 63V CERAM 1 508 N0245
C 0092	149000105	CAP 1 PF+-0,25P 63V CERAM 1 508 N0245
C 0093	154907031	CAP 0,5 PF 3 250V AJUST CERAM TUB STETT R-TRIKO 313512020
C 0094	149324701	CAP47000 PF-20+80 63V CERAM 2 N0242 02
C 0095	170524701	CAP47000 PF 20 % 250V POLYEST N0263
C 0096	149321002	CAP10000 PF-20+100 63V CERAM 2 N0242
C 0097	149321002	CAP10000 PF-20+100 63V CERAM 2 N0242
C 0098	170521001	CAP10000 PF 20 % 250V POLYEST N0263
C 0099	154907031	CAP 0,5 PF 3 250V AJUST CERAM TUB STETT R-TRIKO 313512020
C 0100	149000105	CAP 1 PF+-0,25P 63V CERAM 1 508 N0245
C 0101	170524701	CAP47000 PF 20 % 250V POLYEST N0263
C 0102	170524701	CAP47000 PF 20 % 250V POLYEST N0263
C 0103	156808047	CAP 47 MF-10+50 10V CHIMIC RAD 508 N0220

REPERE TOPO.	COMPOSANT N° ARTICLE	COMPOSANT DESIGNATION
C 0104	156826010	CAP 10 MF-10+50 35V CHIMIC RAD 508 N0220
C 0105	156819110	CAP 100 MF-10+50 25V CHIMIC RAD 508 N0220
C 0106	145501410	CAP 0,1 MF-20+80 25V CERAM 3 RAD 508 LCC-- GFO 611 UB
C 0107	145501410	CAP 0,1 MF-20+80 25V CERAM 3 RAD 508 LCC-- GFO 611 UB
C 0108	177330410	CAP 0,1 MF-20+80 63V CERAM 3 RAD 508 LCC-- GFO 611 UB
C 0109	177330410	CAP 0,1 MF-20+80 63V CERAM 3 RAD 508 LCC-- GFO 611 UB
C 0110	145501410	CAP 0,1 MF-20+80 25V CERAM 3 RAD 508 LCC-- GFO 611 UB
C 0111	149321002	CAP10000 PF-20+100 63V CERAM 2 N0242
C 0112	170531002	CAP 0,1 MF 10 % 250V POLYEST N0263
C 0113	170531002	CAP 0,1 MF 10 % 250V POLYEST N0263
C 0114	149010221	CAP 220 PF 5 % 63V CERAM 1 508 N0245
C 0115	149005605	CAP 56 PF 5 % 63V CERAM 1 508 N0245
C 0116	149511005	CAP 1000 PF 10 % 63V CERAM 2 N0242
C 0117	156826022	CAP 22 MF-10+50 35V CHIMIC RAD 508 N0220
C 0118	156826022	CAP 22 MF-10+50 35V CHIMIC RAD 508 N0220
C 0119	149010181	CAP 180 PF 5 % 63V CERAM 1 508 N0245
C 0120	149008205	CAP 82 PF 5 % 63V CERAM 1 508 N0245
C 0121	149003305	CAP 33 PF 5 % 63V CERAM 1 508 N0245
C 0122	156803047	CAP 47 MF-10+50 10V CHIMIC RAD 508 N0220
C 0123	149003905	CAP 39 PF 5 % 63V CERAM 1 508 N0245
C 0124	145501410	CAP 0,1 MF-20+80 25V CERAM 3 RAD 508 LCC-- GFO 611 UB
C 0125	156808110	CAP 100 MF-10+50 10V CHIMIC RAD 508 N0220
C 0126	156807210	CAP 1000 MF-10+50 10V CHIMIC RAD 508 ITT-- EN 12-35-X
C 0127	156807210	CAP 1000 MF-10+50 10V CHIMIC RAD 508 ITT-- EN 12-35-X
C 0129	149511005	CAP 1000 PF 10 % 63V CERAM 2 N0242

7 5224 9151

Circuit Z3 - Carte X

REPERE TOPO.	COMPOSANT NO ARTICLE	COMPOSANT DESIGNATION
C 0130	149005605	CAP 56 PF 5 % 63V CERAM 1 508 NO245
C 0132	149008205	CAP 82 PF 5 % 63V CERAM 1 508 NO245
C 0133	149321002	CAP10000 PF-20+100 63V CERAM 2 NO242
C 0135	149008205	CAP 82 PF 5 % 63V CERAM 1 508 NO245
C 0136	145501410	CAP 0,1 MF-20+80 25V CERAM 3 RAD 508 LCC-- GFO 611 UB
C 0137	145501410	CAP 0,1 MF-20+80 25V CERAM 3 RAD 508 LCC-- GFO 611 UB
C 0138	164501533	CAP 33 MF-20+50 10V TANTAL GOUT NO203
C 0139	145501410	CAP 0,1 MF-20+80 25V CERAM 3 RAD 508 LCC-- GFO 611 UB
C 0140	145501410	CAP 0,1 MF-20+80 25V CERAM 3 RAD 508 LCC-- GFO 611 UB
C 0141	145501410	CAP 0,1 MF-20+80 25V CERAM 3 RAD 508 LCC-- GFO 611 UB
C 0142	145501410	CAP 0,1 MF-20+80 25V CERAM 3 RAD 508 LCC-- GFO 611 UB
C 0143	149321002	CAP10000 PF-20+100 63V CERAM 2 NO242
C 0144	145501410	CAP 0,1 MF-20+80 25V CERAM 3 RAD 508 LCC-- GFO 611 UB
C 0146	156808047	CAP 47 MF-10+50 10V CHIMIC RAD 508 NO220
C 0150	156808047	CAP 47 MF-10+50 10V CHIMIC RAD 508 NO220
C 0151	149511005	CAP 1000 PF 10 % 63V CERAM 2 NO242
C 0152	149001805	CAP 18 PF 5 % 63V CERAM 1 508 NO245
CR0001	200344480	DIOD SPCIAL* 1N4448 * 75 V SWITC TEXAS INDIC
CR0002	200344480	DIOD SPCIAL* 1N4448 * 75 V SWITC TEXAS INDIC
CR0003	200344480	DIOD SPCIAL* 1N4448 * 75 V SWITC TEXAS INDIC
CR0004	200344480	DIOD SPCIAL* 1N4448 * 75 V SWITC TEXAS INDIC
CR0006	200744840	DIOD LUMIN 3 MM ROUGE HP--- HLMP-1000 5082-4480
CR0007	200744840	DIOD LUMIN 3 MM ROUGE HP--- HLMP-1000 5082-4480
CR0008	200344480	DIOD SPCIAL* 1N4448 * 75 V SWITC TEXAS INDIC
CR0009	200707001	DIOD LUMIN 3 MM VERTE 2,30 SIEMS CQV35E

REPERE TOPO.	COMPOSANT NO ARTICLE	COMPOSANT DESIGNATION
CR0010	200344480	DIOD SPCIAL* 1N4448 * 75 V . SWITC TEXAS INDIC
CR0011	200303000	DIOD GENERL* 1N3595 *150 V 200 MA SESCO INDIC
CR0012	200342440	DIOD SPCIAL* 1N4244 * 20 V SWITC SESCO INDIC
CR0013	200344480	DIOD SPCIAL* 1N4448 * 75 V SWITC TEXAS INDIC
CR0014	200455120	DIOD ZENER *BZX 55 * 12 V 5,0MA SESCO INDIC
CR0015	200344480	DIOD SPCIAL* 1N4448 * 75 V SWITC TEXAS INDIC
CR0016	200344480	DIOD SPCIAL* 1N4448 * 75 V SWITC TEXAS INDIC
CR0017	200303000	DIOD GENERL* 1N3595 *150 V 200 MA SESCO INDIC
CR0018	200342440	DIOD SPCIAL* 1N4244 * 20 V SWITC SESCO INDIC
CR0019	200344480	DIOD SPCIAL* 1N4448 * 75 V SWITC TEXAS INDIC
CR0020	200344480	DIOD SPCIAL* 1N4448 * 75 V SWITC TEXAS INDIC
CR0021	200344480	DIOD SPCIAL* 1N4448 * 75 V SWITC TEXAS INDIC
CR0022	200344480	DIOD SPCIAL* 1N4448 * 75 V SWITC TEXAS INDIC
CR0023	200344480	DIOD SPCIAL* 1N4448 * 75 V SWITC TEXAS INDIC
CR0024	200344480	DIOD SPCIAL* 1N4448 * 75 V SWITC TEXAS INDIC
CR0025	200455220	DIOD ZENER *BZX 55 * 22 V 5,0MA SESCO INDIC
CR0026	200455220	DIOD ZENER *BZX 55 * 22 V 5,0MA SESCO INDIC
CR0027	200344480	DIOD SPCIAL* 1N4448 * 75 V SWITC TEXAS INDIC
CR0028	200344480	DIOD SPCIAL* 1N4448 * 75 V SWITC TEXAS INDIC
CR0029	200344480	DIOD SPCIAL* 1N4448 * 75 V SWITC TEXAS INDIC
CR0030	200344480	DIOD SPCIAL* 1N4448 * 75 V SWITC TEXAS INDIC
CR0031	200344480	DIOD SPCIAL* 1N4448 * 75 V SWITC TEXAS INDIC
CR0034	200344480	DIOD SPCIAL* 1N4448 * 75 V SWITC TEXAS INDIC
CR0035	200344480	DIOD SPCIAL* 1N4448 * 75 V SWITC TEXAS INDIC
CR0036	200344480	DIOD SPCIAL* 1N4448 * 75 V. SWITC TEXAS INDIC

7 5224 9151 Circuit Z3 - Carte X

REPERE TOPO.	COMPOSANT NO ARTICLE	COMPOSANT DESIGNATION
CR0037	200344480	DIOD SPCIAL* 1N4448 * 75 V SWITC TEXAS INDIC
CR0038	200455051	DIOD ZENER *BZX 55 * 5,1V 5,0MA SESCO INDIC
CR0039	200455100	DIOD ZENER *BZX 55 * 10 V 5,0MA SESCO INDIC
CR0040	200455100	DIOD ZENER *BZX 55 * 10 V 5,0MA SESCO INDIC
CR0041	200344480	DIOD SPCIAL* 1N4448 * 75 V SWITC TEXAS INDIC
CR0042	200344480	DIOD SPCIAL* 1N4448 * 75 V SWITC TEXAS INDIC
J 0001	889504371	CONNEC BERG MALE COUDE 10C
J 0002	889504371	CONNEC BERG MALE COUDE 10C
J 0006	214421105	CONNEC CI IMP EMB FEM 10C PICO 396 MOLEX 26-11-2103 3215-10CH
J 0007	214421105	CONNEC CI IMP EMB FEM 10C PICO 396 MOLEX 26-11-2103 3215-10CH
J 0008	214421105	CONNEC CI IMP EMB FEM 10C PICO 396 MOLEX 26-11-2103 3215-10CH
J 0009	214421059	CONNEC CI IMP EMB FEM 5C PICO DORE 396 MOLEX 26-30-1053-3215-5CHG
K 0001	210901209	RELAIS REED 12V 855 OHM 1T CLARE CUP S 001 A112
Q 0001	200101840	TRANST LP SI N*BC 184 * X 55 N2081 INDIC
Q 0002	200101840	TRANST LP SI N*BC 184 * X 55 N2081 INDIC
Q 0003	200101840	TRANST LP SI N*BC 184 * X 55 N2081 INDIC
Q 0004	200123693	TRANST LP SI N*MPS 2369 * TO 92 MOTOR
Q 0005	200102142	TRANST LP SI P*BC 214 * X 55 N2081 INDIC
Q 0006	200142581	TRANST LP SI P*PN 4258 * TO 92 NS--- INDIC
Q 0007	200142581	TRANST LP SI P*PN 4258 * TO 92 NS--- INDIC
Q 0008	200123693	TRANST LP SI N*MPS 2369 * TO 92 MOTOR
Q 0009	200101840	TRANST LP SI N*BC 184 * X 55 N2081 INDIC
Q 0011	200142581	TRANST LP SI P*PN 4258 * TO 92 NS--- INDIC
Q 0012	200142581	TRANST LP SI P*PN 4258 * TO 92 NS--- INDIC
Q 0013	200101840	TRANST LP SI N*BC 184 * X 55 N2081 INDIC

REPERE TOPO.	COMPOSANT NO ARTICLE	COMPOSANT DESIGNATION
Q 0014	200102142	TRANST LP SI P*BC 214 * X 55 N2081 INDIC
Q 0015	200142581	TRANST LP SI P*PN 4258 * TO 92 NS--- INDIC
Q 0016	200101840	TRANST LP SI N*BC 184 * X 55 N2081 INDIC
Q 0017	200101840	TRANST LP SI N*BC 184 * X 55 N2081 INDIC
Q 0018	200142581	TRANST LP SI P*PN 4258 * TO 92 NS--- INDIC
Q 0019	200102142	TRANST LP SI P*BC 214 * X 55 N2081 INDIC
Q 0020	270144161	TRANST TRI DE 1 2N4416 /200144160
Q 0021	200102142	TRANST LP SI P*BC 214 * X 55 N2081 INDIC
Q 0022	200101840	TRANST LP SI N*BC 184 * X 55 N2081 INDIC
Q 0023	200142581	TRANST LP SI P*PN 4258 * TO 92 NS--- INDIC
Q 0024	200142581	TRANST LP SI P*PN 4258 * TO 92 NS--- INDIC
Q 0025	200102142	TRANST LP SI P*BC 214 * X 55 N2081 INDIC
Q 0026	200142581	TRANST LP SI P*PN 4258 * TO 92 NS--- INDIC
Q 0027	200142581	TRANST LP SI P*PN 4258 * TO 92 NS--- INDIC
Q 0028	200102142	TRANST LP SI P*BC 214 * X 55 N2081 INDIC
Q 0029	270144161	TRANST TRI DE 1 2N4416 /200144160
Q 0030	200102142	TRANST LP SI P*BC 214 * X 55 N2081 INDIC
Q 0031	200101840	TRANST LP SI N*BC 184 * X 55 N2081 INDIC
Q 0032	200142581	TRANST LP SI P*PN 4258 * TO 92 NS--- INDIC
Q 0033	200102142	TRANST LP SI P*BC 214 * X 55 N2081 INDIC
Q 0034	200102142	TRANST LP SI P*BC 214 * X 55 N2081 INDIC
Q 0035	200102142	TRANST LP SI P*BC 214 * X 55 N2081 INDIC
Q 0036	200123693	TRANST LP SI N*MPS 2369 * TO 92 MOTOR
Q 0037	200123693	TRANST LP SI N*MPS 2369 * TO 92 MOTOR
Q 0038	200142581	TRANST LP SI P*PN 4258 * TO 92 NS--- INDIC

7 5224 9151

Circuit Z3 - Carte X

REPERE TOPO.	COMPOSANT NO ARTICLE	COMPOSANT DESIGNATION
Q 0039	200142581	TRANST LP SI P*PN 4258 * TO 92 NS--- INDIC
Q 0040	200142581	TRANST LP SI P*PN 4258 * TO 92 NS--- INDIC
Q 0042	200102142	TRANST LP SI P*BC 214 * X 55 N2081 INDIC
Q 0043	200123691	TRANST LP SI N*MPS 2369 * TO 92 MOTOR
Q 0044	200142581	TRANST LP SI P*PN 4258 * TO 92 NS--- INDIC
Q 0045	200142584	TRANST LP SI P*PN 4258 * TO 92 NS--- INDIC
Q 0046	200104920	TRANST LP BF 492 * TO 92 MOTO
Q 0047	200155510	TRANST LP SI N*2N 5551 * TO 92 MOTOR
Q 0048	200104920	TRANST LP BF 492 * TO 92 MOTOR
Q 0049	200155510	TRANST LP SI N*2N 5551 * TO 92 MOTOR
Q 0050	200123693	TRANST LP SI N*MPS 2369 * TO 92 MOTOR
Q 0052	200101840	TRANST LP SI N*BC 184 * X 55 N2081 INDIC
Q 0053	200102142	TRANST LP SI P*BC 214 * X 55 N2081 INDIC
Q 0054	200101840	TRANST LP SI N*BC 184 * X 55 N2081 INDIC
Q 0055	200101840	TRANST LP SI N*BC 184 * X 55 N2081 INDIC
Q 0056	200101840	TRANST LP SI N*BC 184 * X 55 N2081 INDIC
Q 0057	200101840	TRANST LP SI N*BC 184 * X 55 N2081 INDIC
Q 0058	200102142	TRANST LP SI P*BC 214 * X 55 N2081 INDIC
Q 0059	200142581	TRANST LP SI P*PN 4258 * TO 92 NS--- INDIC
Q 0060	200142591	TRANST LP SI P*PN 4258 * TO 92 NS--- INDIC
Q 0061	200142581	TRANST LP SI P*PN 4258 * TO 92 NS--- INDIC
Q 0062	200102143	TRANST LP SI P*BC 214C * TEXAS
Q 0063	200102142	TRANST LP SI P*BC 214 * X 55 N2081 INDIC
Q 0064	200102143	TRANST LP SI P*BC 214C * TEXAS
Q 0065	200102143	TRANST LP SI P*BC 214C * TEXAS
Q 0066	200102143	TRANST LP SI P*BC 214C * TEXAS
Q 0067	200102142	TRANST LP SI P*BC 214 * X 55 N2081 INDIC
R 0001	016410330	RES 3,3 K 5 % 0,25W CARBON N0102
R 0002	016420240	RES 24 K 5 % 0,25W CARBON N0102
R 0003	016403600	RES 360 OHM 5 % 0,25W CARBON N0102
R 0004	016420240	RES 24 K 5 % 0,25W CARBON N0102
R 0005	016420240	RES 24 K 5 % 0,25W CARBON N0102
R 0006	016420200	RES 20 K 5 % 0,25W CARBON N0102
R 0007	016420200	RES 20 K 5 % 0,25W CARBON N0102
R 0008	016422200	RES 220 K 5 % 0,25W CARBON N0102
R 0009	041310196	RES 1,96 K 1 % 0,25W METAL 50 PPM N0112
R 0010	016400100	RES 10 OHM 5 % 0,25W CARBON N0102
R 0011	041310511	RES 5,11 K 1 % 0,25W METAL 50 PPM N0112
R 0012	016401000	RES 100 OHM 5 % 0,25W CARBON N0102
R 0013	016400470	RES 47 OHM 5 % 0,25W CARBON N0102
R 0014	016405100	RES 510 OHM 5 % 0,25W CARBON N0102
R 0015	016410390	RES 3,9 K 5 % 0,25W CARBON N0102
R 0016	016410220	RES 2,2 K 5 % 0,25W CARBON N0102
R 0017	016422200	RES 220 K 5 % 0,25W CARBON N0102
R 0018	016401000	RES 100 OHM 5 % 0,25W CARBON N0102
R 0019	041320324	RES 32,4 K 1 % 0,25W METAL 50 PPM N0112
R 0020	016410180	RES 1,8 K 5 % 0,25W CARBON N0102
R 0021	016410100	RES 1,0 K 5 % 0,25W CARBON N0102
R 0022	016405100	RES 510 OHM 5 % 0,25W CARBON N0102
R 0023	016420470	RES 47 K 5 % 0,25W CARBON N0102

7 5224 9151 Circuit Z3 - Carte X

REPERE TOPO.	COMPOSANT NO ARTICLE	COMPOSANT DESIGNATION
R 0024	016420150	RES 15 K 5 % 0,25W CARBON NO102
R 0025	016422200	RES 220 K 5 % 0,25W CARBON NO102
R 0026	897500213	POTC•INV 1P 10K 20%A VOIR PLAN 5224 RUWID 0514 300
R 0027	016420100	RES 10 K 5 % 0,25W CARBON NO102
R 0028	016420100	RES 10 K 5 % 0,25W CARBON NO102
R 0029	016405100	RES 510 OHM 5 % 0,25W CARBON NO102
R 0030	016400100	RES 10 OHM 5 % 0,25W CARBON NO102
R 0031	016403600	RES 360 OHM 5 % 0,25W CARBON NO102
R 0032	016403600	RES 360 OHM 5 % 0,25W CARBON NO102
R 0034	016401000	RES 100 OHM 5 % 0,25W CARBON NO102
R 0035	016402000	RES 200 OHM 5 % 0,25W CARBON NO102
R 0036	016400470	RES 47 OHM 5 % 0,25W CARBON NO102
R 0037	016401000	RES 100 OHM 5 % 0,25W CARBON NO102
R 0038	016405100	RES 510 OHM 5 % 0,25W CARBON NO102
R 0039	016400470	RES 47 OHM 5 % 0,25W CARBON NO102
R 0040	897500213	POTC•INV 1P 10K 20%A VOIR PLAN 5224 RUWID 0514 300
R 0041	016410330	RES 3,3 K 5 % 0,25W CARBON NO102
R 0042	016410150	RES 1,5 K 5 % 0,25W CARBON NO102
R 0043	016410470	RES 4,7 K 5 % 0,25W CARBON NO102
R 0044	016403600	RES 360 OHM 5 % 0,25W CARBON NO102
R 0045	016403600	RES 360 OHM 5 % 0,25W CARBON NO102
R 0046	105400510	POT 1 M 20%A CAR TRIM PLAQ HOR CI PIHER PT10 LV
R 0047	105400510	POT 1 M 20%A CAR TRIM PLAQ HOR CI PIHER PT10 LV
R 0048	105400510	POT 1 M 20%A CAR TRIM PLAQ HOR CI PIHER PT10 LV
R 0049	016421500	RES 150 K 5 % 0,25W CARBON NO102

REPERE TOPO.	COMPOSANT NO ARTICLE	COMPOSANT DESIGNATION
R 0050	016421500	RES 150 K 5 % 0,25W CARBON NO102
R 0051	041320499	RES 49,9 K 1 % 0,25W METAL 50 PPM NO112
R 0052	041320604	RES 60,4 K 1 % 0,25W METAL 50 PPM NO112
R 0053	016420120	RES 12 K 5 % 0,25W CARBON NO102
R 0054	041310255	RES 2,55 K 1 % 0,25W METAL 50 PPM NO112
R 0055	041310511	RES 5,11 K 1 % 0,25W METAL 50 PPM NO112
R 0056	041310499	RES 4,99 K 1 % 0,25W METAL 50 PPM NO112
R 0057	016410330	RES 3,3 K 5 % 0,25W CARBON NO102
R 0058	016410330	RES 3,3 K 5 % 0,25W CARBON NO102
R 0059	016410330	RES 3,3 K 5 % 0,25W CARBON NO102
R 0060	016431000	RES 1,0 M 5 % 0,25W CARBON NO102
R 0061	016431000	RES 1,0 M 5 % 0,25W CARBON NO102
R 0062	897500309	POTC DBCS•INT 220KAV•47KAR 20%A CI RUWID 0811-301E
R 0063	105400510	POT 1 M 20%A CAR TRIM PLAQ HOR CI PIHER PT10 LV
R 0064	105400510	POT 1 M 20%A CAR TRIM PLAQ HOR CI PIHER PT10 LV
R 0065	016421500	RES 150 K 5 % 0,25W CARBON NO102
R 0066	016421500	RES 150 K 5 % 0,25W CARBON NO102
R 0067	041320475	RES 47,5 K 1 % 0,25W METAL 50 PPM NO112
R 0068	016420100	RES 10 K 5 % 0,25W CARBON NO102
R 0069	041320604	RES 60,4 K 1 % 0,25W METAL 50 PPM NO112
R 0070	041310255	RES 2,55 K 1 % 0,25W METAL 50 PPM NO112
R 0071	041310487	RES 4,87 K 1 % 0,25W METAL 50 PPM NO112
R 0072	075231505	RES 5,05 K 0,5 % 0,3 W METAL 50 PPM DRALR SMA 0207
R 0073	016431000	RES 1,0 M 5 % 0,25W CARBON NO102
R 0074	016431000	RES 1,0 M 5 % 0,25W CARBON NO102

ENERTEC
Schlumberger

NOMENCLATURE 5277

7 5224 9151

Circuit Z3 - Carte X

REPERE TOPO.	COMPOSANT NO ARTICLE	COMPOSANT DESIGNATION
R 0075	016431000	RES 1,0 M 5 % 0,25W CARBON N0102
R 0076	897504323	POTENTIO RECOUPE DE 118424347 RUWID 0503-306
R 0077	016420240	RES 24 K 5 % 0,25W CARBON N0102
R 0078	016420100	RES 10 K 5 % 0,25W CARBON N0102
R 0079	016400100	RES 10 OHM 5 % 0,25W CARBON N0102
R 0080	016410100	RES 1,0 K 5 % 0,25W CARBON N0102
R 0081	016410470	RES 4,7 K 5 % 0,25W CARBON N0102
R 0082	016410100	RES 1,0 K 5 % 0,25W CARBON N0102
R 0083	016403600	RES 360 OHM 5 % 0,25W CARBON N0102
R 0084	016406800	RES 680 OHM 5 % 0,25W CARBON N0102
R 0085	016410120	RES 1,2 K 5 % 0,25W CARBON N0102
R 0086	041310182	RES 1,82 K 1 % 0,25W METAL 50 PPM N0112
R 0087	016420100	RES 10 K 5 % 0,25W CARBON N0102
R 0089	016401500	RES 150 OHM 5 % 0,25W CARBON N0102
R 0090	016402000	RES 200 OHM 5 % 0,25W CARBON N0102
R 0091	016405100	RES 510 OHM 5 % 0,25W CARBON N0102
R 0095	041310562	RES 5,62 K 1 % 0,25W METAL 50 PPM N0112
R 0096	041310294	RES 2,94 K 1 % 0,25W METAL 50 PPM N0112
R 0097	016404700	RES 470 OHM 5 % 0,25W CARBON N0102
R 0098	016405100	RES 510 OHM 5 % 0,25W CARBON N0102
R 0099	016420390	RES 39 K 5 % 0,25W CARBON N0102
R 0100	016420100	RES 10 K 5 % 0,25W CARBON N0102
R 0101	016420390	RES 39 K 5 % 0,25W CARBON N0102
R 0102	016420100	RES 10 K 5 % 0,25W CARBON N0102

REPERE TOPO.	COMPOSANT NO ARTICLE	COMPOSANT DESIGNATION
R 0103	016410470	RES 4,7 K 5 % 0,25W CARBON N0102
R 0104	016403000	RES 300 OHM 5 % 0,25W CARBON N0102
R 0105	016410470	RES 4,7 K 5 % 0,25W CARBON N0102
R 0106	016401000	RES 100 OHM 5 % 0,25W CARBON N0102
R 0107	016405100	RES 510 OHM 5 % 0,25W CARBON N0102
R 0108	016420150	RES 15 K 5 % 0,25W CARBON N0102
R 0109	016405100	RES 510 OHM 5 % 0,25W CARBON N0102
R 0110	016410620	RES 6,2 K 5 % 0,25W CARBON N0102
R 0111	016410820	RES 8,2 K 5 % 0,25W CARBON N0102
R 0112	041310487	RES 4,87 K 1 % 0,25W METAL 50 PPM N0112
R 0113	041310698	RES 6,98 K 1 % 0,25W METAL 50 PPM N0112
R 0114	016410390	RES 3,9 K 5 % 0,25W CARBON N0102
R 0115	041310200	RES 2 K 1 % 0,25W METAL 50 PPM N0112
R 0116	041310806	RES 8,06 K 1 % 0,25W METAL 50 PPM N0112
R 0117	041301580	RES 158 OHM 1 % 0,25W METAL 50 PPM N0112
R 0118	016400220	RES 22 OHM 5 % 0,25W CARBON N0102
R 0119	016401500	RES 150 OHM 5 % 0,25W CARBON N0102
R 0120	016403600	RES 360 OHM 5 % 0,25W CARBON N0102
R 0122	016410160	RES 1,6 K 5 % 0,25W CARBON N0102
R 0123	016400470	RES 47 OHM 5 % 0,25W CARBON N0102
R 0124	016420150	RES 15 K 5 % 0,25W CARBON N0102
R 0126	016410330	RES 3,3 K 5 % 0,25W CARBON N0102
R 0127	016401800	RES 180 OHM 5 % 0,25W CARBON N0102
R 0128	016420300	RES 30 K 5 % 0,25W CARBON N0102
R 0129	105400322	POT 22 K 20%A CAR TRIM PLAQ HOR CI PINEK PT10 LV

7 5224 9151 Circuit Z3 - Carte X

REPERE TUPO.	COMPOSANT NO ARTICLE	COMPOSANT DESIGNATION
R 0130	016419100	RES 1,0 K 5 % 0,25W CARBON N0102
R 0131	016420150	RES 15 K 5 % 0,25W CARBON N0102
R 0132	016410100	RES 1,0 K 5 % 0,25W CARBON N0102
R 0133	041310255	RES 2,55 K 1 % 0,25W METAL 50 PPM N0112
R 0134	016402400	RES 240 OHM 5 % 0,25W CARBON N0102
R 0135	016420150	RES 15 K 5 % 0,25W CARBON N0102
R 0136	016410470	RES 4,7 K 5 % 0,25W CARBON N0102
R 0137	016410100	RES 1,0 K 5 % 0,25W CARBON N0102
R 0138	016420300	RES 30 K 5 % 0,25W CARBON N0102
R 0139	041310604	RES 6,04 K 1 % 0,25W METAL 50 PPM N0112
R 0140	016419200	RES 2,0 K 5 % 0,25W CARBON N0102
R 0141	016420100	RES 10 K 5 % 0,25W CARBON N0102
R 0142	016410110	RES 1,1 K 5 % 0,25W CARBON N0102
R 0143	016420100	RES 10 K 5 % 0,25W CARBON N0102
R 0144	016420100	RES 10 K 5 % 0,25W CARBON N0102
R 0145	016420100	RES 10 K 5 % 0,25W CARBON N0102
R 0146	016410100	RES 1,0 K 5 % 0,25W CARBON N0102
R 0147	016401500	RES 150 OHM 5 % 0,25W CARBON N0102
R 0148	016420100	RES 10 K 5 % 0,25W CARBON N0102
R 0149	041310511	RES 5,11 K 1 % 0,25W METAL 50 PPM N0112
R 0150	016405600	RES 560 OHM 5 % 0,25W CARBON N0102
R 0151	016410330	RES 3,3 K 5 % 0,25W CARBON N0102
R 0152	016410100	RES 1,0 K 5 % 0,25W CARBON N0102
R 0153	016420150	RES 15 K 5 % 0,25W CARBON N0102
R 0154	016405100	RES 510 OHM 5 % 0,25W CARBON N0102

REPERE TUPO.	COMPOSANT NO ARTICLE	COMPOSANT DESIGNATION
R 0155	016402000	RES 200 OHM 5 % 0,25W CARBON N0102
R 0156	016403300	RES 330 OHM 5 % 0,25W CARBON N0102
R 0157	016400390	RES 39 OHM 5 % 0,25W CARBON N0102
R 0158	016421000	RES 100 K 5 % 0,25W CARBON N0102
R 0159	041310487	RES 4,87 K 1 % 0,25W METAL 50 PPM N0112
R 0160	016410200	RES 2,0 K 5 % 0,25W CARBON N0102
R 0161	016401000	RES 100 OHM 5 % 0,25W CARBON N0102
R 0162	016410100	RES 1,0 K 5 % 0,25W CARBON N0102
R 0163	016410330	RES 3,3 K 5 % 0,25W CARBON N0102
R 0165	016401800	RES 180 OHM 5 % 0,25W CARBON N0102
R 0166	016420150	RES 15 K 5 % 0,25W CARBON N0102
R 0167	016410160	RES 1,6 K 5 % 0,25W CARBON N0102
R 0168	016400470	RES 47 OHM 5 % 0,25W CARBON N0102
R 0169	016420240	RES 24 K 5 % 0,25W CARBON N0102
R 0170	016403300	RES 330 OHM 5 % 0,25W CARBON N0102
R 0172	016401000	RES 100 OHM 5 % 0,25W CARBON N0102
R 0174	016400750	RES 75 OHM 5 % 0,25W CARBON N0102
R 0175	016402000	RES 200 OHM 5 % 0,25W CARBON N0102
R 0176	016405100	RES 510 OHM 5 % 0,25W CARBON N0102
R 0177	016408200	RES 820 OHM 5 % 0,25W CARBON N0102
R 0178	016400330	RES 33 OHM 5 % 0,25W CARBON N0102
R 0179	016410470	RES 4,7 K 5 % 0,25W CARBON N0102
R 0180	016420150	RES 15 K 5 % 0,25W CARBON N0102
R 0181	016420130	RES 13 K 5 % 0,25W CARBON N0102
R 0182	016410470	RES 4,7 K 5 % 0,25W CARBON N0102

7 5224 9151 Circuit Z3 - Carte X

REPERE TOPO.	COMPOSANT NO ARTICLE	COMPOSANT DESIGNATION
R 0183	016420150	RES 15 K 5 % 0,25W CARBON N0102
R 0184	016410470	RES 4,7 K 5 % 0,25W CARBON N0102
R 0185	016422000	RES 200 K 5 % 0,25W CARBON N0102
R 0186	016400100	RES 10 OHM 5 % 0,25W CARBON N0102
R 0187	041310715	RES 7,15 K 1 % 0,25W METAL 50 PPM N0112
R 0188	016410470	RES 4,7 K 5 % 0,25W CARBON N0102
R 0189	016410200	RES 2,0 K 5 % 0,25W CARBON N0102
R 0190	016410100	RES 1,0 K 5 % 0,25W CARBON N0102
R 0191	041310715	RES 7,15 K 1 % 0,25W METAL 50 PPM N0112
R 0192	016410470	RES 4,7 K 5 % 0,25W CARBON N0102
R 0193	016410200	RES 2,0 K 5 % 0,25W CARBON N0102
R 0194	016405100	RES 510 OHM 5 % 0,25W CARBON N0102
R 0195	016410200	RES 2,0 K 5 % 0,25W CARBON N0102
R 0196	016408200	RES 820 OHM 5 % 0,25W CARBON N0102
R 0198	897500310	POTC DRCS 2,2KAV+22KAR 20%A CI RUWID 0810-300
R 0199	016420470	RES 47 K 5 % 0,25W CARBON N0102
R 0200	016410360	RES 3,6 K 5 % 0,25W CARBON N0102
R 0201	041310105	RES 1,05 K 1 % 0,25W METAL 50 PPM N0112
R 0202	016400010	RES 1,0 OHM 5 % 0,25W CARBON N0102
R 0203	041310200	RES 2 K 1 % 0,25W METAL 50 PPM N0112
R 0204	041305760	RES 576 OHM 1 % 0,25W METAL 50 PPM N0112
R 0205	016402000	RES 200 OHM 5 % 0,25W CARBON N0102
R 0206	041305230	RES 523 OHM 1 % 0,25W METAL 50 PPM N0112
R 0207	041310200	RES 2 K 1 % 0,25W METAL 50 PPM N0112
R 0208	041301690	RES 169 OHM 1 % 0,25W METAL 50 PPM N0112

REPERE TOPO.	COMPOSANT NO ARTICLE	COMPOSANT DESIGNATION
R 0209	041305760	RES 576 OHM 1 % 0,25W METAL 50 PPM N0112
R 0210	016400750	RES 75 OHM 5 % 0,25W CARBON N0102
R 0211	041307680	RES 768 OHM 1 % 0,25W METAL 50 PPM N0112
R 0212	016400620	RES 62 OHM 5 % 0,25W CARBON N0102
R 0213	016400010	RES 1,0 OHM 5 % 0,25W CARBON N0102
R 0214	105904700	POT 470 U 20%A CER TRIM PLAQ HOR CI N0332
R 0215	016410130	RES 1,3 K 5 % 0,25W CARBON N0102
R 0216	105900470	POT 47 U 20%A CER TRIM PLAQ HOR CI N0332
R 0217	016410100	RES 1,0 K 5 % 0,25W CARBON N0102
R 0218	016410100	RES 1,0 K 5 % 0,25W CARBON N0102
R 0219	041302150	RES 215 OHM 1 % 0,25W METAL NO 112
R 0220	041305760	RES 576 OHM 1 % 0,25W METAL 50 PPM N0112
R 0221	041306650	RES 650 OHM 1 % 0,25W METAL 50 PPM N0112
R 0222	041310590	RES 5,9 K 1 % 0,25W METAL 50 PPM N0112
R 0223	075342182	RES 18,2 K 1 % 0,5 W METAL 50 PPM DRALR SMA 0411
R 0224	016403000	RES 300 OHM 5 % 0,25W CARBON N0102
R 0225	016410160	RES 1,6 K 5 % 0,25W CARBON N0102
R 0226	016410160	RES 1,6 K 5 % 0,25W CARBON N0102
R 0230	016405600	RES 560 OHM 5 % 0,25W CARBON N0102
R 0231	075342200	RES 20 K 1 % 0,5 W METAL 50 PPM DRALR SMA 0411
R 0232	016400470	RES 47 OHM 5 % 0,25W CARBON N0102
R 0233	016400220	RES 22 OHM 5 % 0,25W CARBON N0102
R 0234	016423600	RES 360 K 5 % 0,25W CARBON N0102
R 0235	016404300	RES 430 OHM 5 % 0,25W CARBON N0102
R 0236	016423600	RES 360 K 5 % 0,25W CARBON N0102

7 5224 9151

Circuit Z3 - Carte X

REPERE TOPO.	COMPOSANT NO ARTICLE	COMPOSANT DESIGNATION
R 0237	016405600	RES 560 OHM 5 % 0,25W CARBON N0102
R 0238	075342200	RES 20 K 1 % 0,5 W METAL 50 PPM DRALR SMA 0411
R 0239	075342182	RES 18,2 K 1 % 0,5 W METAL 50 PPM DRALR SMA 0411
R 0240	016403000	RES 300 OHM 5 % 0,25W CARBON N0102
R 0241	016401000	RES 100 OHM 5 % 0,25W CARBON N0102
R 0242	016400220	RES 22 OHM 5 % 0,25W CARBON N0102
R 0243	016400470	RES 47 OHM 5 % 0,25W CARBON N0102
R 0244	016420750	RES 75 K 5 % 0,25W CARBON N0102
R 0245	041310274	RES 2,74 K 1 % 0,25W METAL 50 PPM N0112
R 0246	016407500	RES 750 OHM 5 % 0,25W CARBON N0102
R 0247	897500312	POTC + INT 2P 1K 20%A CI RUWID 0803.324
R 0248	016401000	RES 100 OHM 5 % 0,25W CARBON N0102
R 0249	016401500	RES 150 OHM 5 % 0,25W CARBON N0102
R 0250	016420100	RES 10 K 5 % 0,25W CARBON N0102
R 0251	016420100	RES 10 K 5 % 0,25W CARBON N0102
R 0252	016420150	RES 15 K 5 % 0,25W CARBON N0102
R 0253	016410100	RES 1,0 K 5 % 0,25W CARBON N0102
R 0254	016421000	RES 100 K 5 % 0,25W CARBON N0102
R 0255	016422200	RES 220 K 5 % 0,25W CARBON N0102
R 0256	041320165	RES 16,5 K 1 % 0,25W METAL 50 PPM N0112
R 0257	041320165	RES 16,5 K 1 % 0,25W METAL 50 PPM N0112
R 0258	041320155	RES 16,5 K 1 % 0,25W METAL 50 PPM N0112
R 0260	041321910	RES 191 K 1 % 0,25W METAL 50 PPM N0112
R 0261	041320249	RES 24,9 K 1 % 0,25W METAL 50 PPM N0112
R 0262	041320249	RES 24,9 K 1 % 0,25W METAL 50 PPM N0112

REPERE TOPO.	COMPOSANT NO ARTICLE	COMPOSANT DESIGNATION
R 0263	105921000	POT 10 K 20%A CER TRIM PLAQ HOR CI N0332
R 0264	016420750	RES 75 K 5 % 0,25W CARBON N0102
R 0265	016420470	RES 47 K 5 % 0,25W CARBON N0102
R 0266	105924700	POT 47 K 20%A CER TRIM PLAQ HOR CI N0332
R 0267	016410100	RES 1,0 K 5 % 0,25W CARBON N0102
R 0268	041320301	RES 30,1 K 1 % 0,25W METAL 50 PPM N0112
R 0269	041320301	RES 30,1 K 1 % 0,25W METAL 50 PPM N0112
R 0270	041320100	RES 10 K 1 % 0,25W METAL 50 PPM N0112
R 0271	016400100	RES 10 OHM 5 % 0,25W CARBON N0102
R 0272	016400100	RES 10 OHM 5 % 0,25W CARBON N0102
R 0273	075344100	RES 1 M 1 % 0,5 W METAL 50 PPM DRALR SMA 0411
R 0274	105914700	POT 4,7K 20%A CER TRIM PLAQ HOR CI N0332
R 0275	075232976	RES 97,6 K 0,5 % 0,35W METAL 50 PPM DRALR SMA 0207
R 0276	105904700	POT 470 U 20%A CER TRIM PLAQ HOR CI N0332
R 0277	075231942	RES 9,42 K 0,5 % 0,3 W METAL 50 PPM DRALR SMA 0207
R 0278	016421000	RES 100 K 5 % 0,25W CARBON N0102
R 0279	016422200	RES 220 K 5 % 0,25W CARBON N0102
R 0280	016422200	RES 220 K 5 % 0,25W CARBON N0102
R 0281	016402400	RES 240 OHM 5 % 0,25W CARBON N0102
R 0282	016420220	RES 22 K 5 % 0,25W CARBON N0102
R 0283	016420220	RES 22 K 5 % 0,25W CARBON N0102
R 0284	016421000	RES 100 K 5 % 0,25W CARBON N0102
R 0285	041320137	RES 13,7 K 1 % 0,25W METAL 50 PPM N0112
R 0286	105912200	POT 2,2K 20%A CER TRIM PLAQ HOR CI N0332
R 0287	041331000	RES 1 M 1 % 0,25W METAL 100 PPM N0112

7 5224 9151 Circuit Z3 - Carte X

REPERE TOPO.	COMPOSANT NO ARTICLE	COMPOSANT DESIGNATION
R 0288	105922200	POT 22 K 20%A CER TRIM PLAQ HOR CI N0332
R 0289	041321430	RES 143 K 1 % 0,25W METAL 50 PPM N0112
R 0290	016423600	RES 360 K 5 % 0,25W CARBON N0102
R 0291	016420270	RES 27 K 5 % 0,25W CARBON N0102
R 0292	016422200	RES 220 K 5 % 0,25W CARBON N0102
R 0293	016420200	RES 20 K 5 % 0,25W CARBON N0102
R 0294	016402700	RES 270 OHM 5 % 0,25W CARBON N0102
R 0295	016428200	RES 820 K 5 % 0,25W CARBON N0102
R 0297	041320649	RES 64,9 K 1 % 0,25W METAL 50 PPM N0112
R 0298	016420100	RES 10 K 5 % 0,25W CARBON N0102
R 0299	016421000	RES 100 K 5 % 0,25W CARBON N0102
R 0300	016403300	RES 330 OHM 5 % 0,25W CARBON N0102
R 0301	016420470	RES 47 K 5 % 0,25W CARBON N0102
R 0302	016410470	RES 4,7 K 5 % 0,25W CARBON N0102
R 0303	016410470	RES 4,7 K 5 % 0,25W CARBON N0102
R 0304	016420270	RES 27 K 5 % 0,25W CARBON N0102
R 0305	016410200	RES 2,0 K 5 % 0,25W CARBON N0102
R 0306	016420270	RES 27 K 5 % 0,25W CARBON N0102
R 0307	016402700	RES 270 OHM 5 % 0,25W CARBON N0102
R 0308	016420150	RES 15 K 5 % 0,25W CARBON N0102
R 0309	016401000	RES 100 OHM 5 % 0,25W CARBON N0102
R 0310	016410100	RES 1,0 K 5 % 0,25W CARBON N0102
R 0311	016700015	RES 1,5 OHM 5 % 0,5 W CARBON N0106
R 0312	041310604	RES 6,04 K 1 % 0,25W METAL 50 PPM N0112
R 0313	041306190	RES 619 OHM 1 % 0,25W METAL 50 PPM N0112

REPERE TOPO.	COMPOSANT NO ARTICLE	COMPOSANT DESIGNATION
R 0314	016400330	RES 33 OHM 5 % 0,25W CARBON N0102
R 0315	016421000	RES 100 K 5 % 0,25W CARBON N0102
R 0316	016420150	RES 15 K 5 % 0,25W CARBON N0102
P 0317	041310562	RES 5,62 K 1 % 0,25W METAL 50 PPM N0112
R 0318	016402000	RES 200 OHM 5 % 0,25W CARBON N0102
R 0319	016420150	RES 15 K 5 % 0,25W CARBON N0102
R 0320	016420150	RES 15 K 5 % 0,25W CARBON N0102
R 0321	108600210	POT 1 K 20%A CER TRIM ROND HOR 0,75W CI SFERN T7YB
R 0322	041310249	RES 2,49 K 1 % 0,25W METAL 50 PPM N0112
R 0323	016400470	RES 47 OHM 5 % 0,25W CARBON N0102
R 0324	016431000	RES 1,0 M 5 % 0,25W CARBON N0102
R 0325	016420470	RES 47 K 5 % 0,25W CARBON N0102
R 0326	016400010	RES 1,0 OHM 5 % 0,25W CARBON N0102
R 0329	016410510	RES 5,1 K 5 % 0,25W CARBON N0102
R 0330	041310294	RES 2,94 K 1 % 0,25W METAL 50 PPM N0112
R 0331	041310340	RES 3,4 K 1 % 0,25W METAL 50 PPM N0112
R 0332	016410510	RES 5,1 K 5 % 0,25W CARBON N0102
R 0333	016400100	RES 10 OHM 5 % 0,25W CARBON N0102
R 0334	016410100	RES 1,0 K 5 % 0,25W CARBON N0102
R 0335	016410180	RES 1,8 K 5 % 0,25W CARBON N0102
R 0337	016410100	RES 1,0 K 5 % 0,25W CARBON N0102
R 0338	016405100	RES 510 OHM 5 % 0,25W CARBON N0102
R 0339	016420100	RES 10 K 5 % 0,25W CARBON N0102
R 0340	016410200	RES 2,0 K 5 % 0,25W CARBON N0102
R 0341	016410200	RES 2,0 K 5 % 0,25W CARBON N0102

7 5224 9151 Circuit Z3 - Carte X

REPERE TOPO.	COMPOSANT NO ARTICLE	COMPOSANT DESIGNATION
R 0342	016408200	RES 820 OHM 5 % 0,25W CARBON N0102
R 0343	016431000	RES 1,0 M 5 % 0,25W CARBON N0102
R 0344	016421000	RES 100 K 5 % 0,25W CARBON N0102
R 0345	016410100	RES 1,0 K 5 % 0,25W CARBON N0102
R 0346	016413470	RES 4,7 K 5 % 0,25W CARBON N0102
R 0347	016402000	RES 200 OHM 5 % 0,25W CARBON N0102
R 0348	035203010	RES 10 OHM 5 % 0,12W METAL 100 PPM N0101
R 0352	016400390	RES 39 OHM 5 % 0,25W CARBON N0102
RR0001	889200009	RESISTANCE RESEAU 5276
RR0002	889200009	RESISTANCE RESEAU 5276
RR0003	889200009	RESISTANCE RESEAU 5276
RR0004	889200009	RESISTANCE RESEAU 5276
RR0005	889200008	RESISTANCE RESEAU 5276
RR0006	889200008	RESISTANCE RESEAU 5276
S 0001	792510047	NOMEN COMMUTATEUR 8 DE TEMPS 5224
U 0001	890100174	CI INTEGRE MEMOIRE UI CI Z3 5224
U 0002	264040500	CI INT LOG CMS MC 14050BCP DIVER DIL 16 N2205
U 0003	264040010	CI INT LOG CMS MC 14001BCP PORTE TO 116 N2205
U 0004	264044330	CI INT LOG CMS*MC 14433P *CON A/D DIL 24 MOTOR
U 0005	264040130	CI INT LOG CMS MC 14013BCP BISTA TO 116 N2205
U 0006	264040130	CI INT LOG CMS MC 14013BCP BISTA TO 116 N2205
U 0007	264040010	CI INT LOG CMS MC 14001BCP PORTE TO 116 N2205
U 0008	264040130	CI INT LOG CMS MC 14013BCP BISTA TO 116 N2205
U 0009	264040130	CI INT LOG CMS MC 14013BCP BISTA TO 116 N2205
U 0010	264040660	CI INT LOG CMS*MC 14066BCP *DIVER DIL 14 MOTOR
U 0012	264040660	CI INT LOG CMS*MC 14066BCP *DIVER DIL 14 MOTOR
U 0013	265000820	CI INT LIN BIP TL 082CP AMP OP DIL 8 TEXAS
U 0014	265000820	CI INT LIN BIP TL 082CP AMP OP DIL 8 TEXAS
U 0015	265000820	CI INT LIN BIP TL 082CP AMP OP DIL 8 TEXAS
U 0016	266403046	CI INT LIN BIP CA 3046 DIVER TO 116 N2105
U 0017	261510216	CI INT LOG ECL MC 10216P DIVER DIL 16 N2204
U 0018	265003580	CI INT LIN BIP*LM 358N *AMP OP DIL 8 NS---
U 0019	261510216	CI INT LOG ECL MC 10216P DIVER DIL 16 N2204
U 0020	265000820	CI INT LIN BIP TL 082CP AMP OP DIL 8 TEXAS
U 0021	264040510	CI INT LOG CMS*MC 14051BPC *MU-PLEX DIL 16 N2205
U 0022	264040511	CI INT LOG CMS*MC 14051BAL *MU-PLEX DIL 16 MOTOR
U 0023	261510115	CI INT LOG ECL MC 10115P DIVER DIL 16 N2204
U 0024	261510131	CI INT LOG ECL MC 10131P BISTA DIL 16 N2204
U 0025	266403046	CI INT LIN BIP CA 3046 DIVER TO 116 N2105
U 0026	265000820	CI INT LIN BIP TL 082CP AMP OP DIL 8 TEXAS
U 0027	266403046	CI INT LIN BIP CA 3046 DIVER TO 116 N2105
U 0028	261510115	CI INT LOG ECL MC 10115P DIVER DIL 16 N2204
U 0029	261510131	CI INT LOG ECL MC 10131P BISTA DIL 16 N2204
U 0030	264040660	CI INT LOG CMS*MC 14066BCP *DIVER DIL 14 MOTOR
U 0032	261510115	CI INT LOG ECL MC 10115P DIVER DIL 16 N2204
U 0033	264040710	CI INT LOG CMS MC 14071BCP PORTE DIL 14 N2205
U 0034	265000820	CI INT LIN BIP TL 082CP AMP OP DIL 8 TEXAS
Z 0003	752240713	RECAP CI Z3 5224

7 5277 1143 Circuit Z4 - Ligne à retard

REPERE TOPO.	COMPOSANT NO ARTICLE	INDICE MODIF	COMPOSANT DESIGNATION	
	214447334	00	CONNEC CI IMP EMB MAL IC POST ETAME BERG- 47314	
	304322032	00	RONDEL ONDUL 3,2X 6 X 0,4 CUPRO BERRYL NOMEL B-52030170	
	310000300		ECROU H M 3 ACIER INOX N6203 NF-E27-411	
	345083080	00	ENTRET HEXA 5,5X 8 M 3 LAITN NICK N6718	
	345093080	00	PILIER HEXA 5 X 8 M 3 LAITN NICK N6708	
	652240080		SPECIF CABLAGE CI Z4	5224
	75224072400		RECAP CI Z4 LIGNE à RETARD	5224
	866034059	00	PILIER POUR BLINDAGE GALVA REPRISE	4795
	867522242	00	PLAQUETTE BLINDAGE DE LAR	5224
	899009766	00	MONTAGE LIGNE A RETARD	5277
C 0001	155700704	02	CAP 7 / 35PF 160V AJ CERM M/V RG/CR CI STETT 7S-TRIKO- 300448-603	
L 0001	872530618		SELF L1-L2 VOIR PLAN	5224
L 0002	872530618		SELF L1-L2 VOIR PLAN	5224

7 5224 1232 Circuit Z5 - Carte Voltmètre

REPERE TOPO.	COMPOSANT NO ARTICLE	COMPOSANT DESIGNATION
	200241400	SUPP 14C DIL 14 SOUD CU-AL ETAME N2500
	200241407	SUPP 14C DIL 14 SOUD BRONZ ETAME STAND TEXAS C82-14-04
	200241600	SUPP 16C DIL 16 SOUD CU-AL ETAME N2500
	303910171	RONDEL PLAT 10,2X17 X 1 PRESS PAHN MFOM- 134
	652240823	SCHEMA ELECTRIQUE VOLTMETRE 5224
	845134043	ENTRETOISE SUPPORT CI -5220-24-27-77-
	87404026	BOUTON COMMUTATEUR ADISQUE 5537
C 0001	149321002	CAP10000 PF-20+100 63V CERAM 2 N0242
C 0002	177330410	CAP 0,1 MF 10 % 250V POLYEST RAD 100 SIEMS B32511-D3104-K
CR0001	200707001	DIOD LUMIN 3 MM VERTE 2,30 SIEMS CQV35E
CR0002	200707001	DIOD LUMIN 3 MM VERTE 2,30 SIEMS CQV35E
CR0003	200707001	DIOD LUMIN 3 MM VERTE 2,30 SIEMS CQV35E
CR0004	200707001	DIOD LUMIN 3 MM VERTE 2,30 SIEMS CQV35E
J 0001	214421104	CONNEC CI IMP EMB FEM 10C PICO 254 MOLEX 38-00-1400 4455C/BAA
J 0002	214421104	CONNEC CI IMP EMB FEM 10C PICO 254 MOLEX 38-00-1400 4455C/BAA
Q 0001	200101840	TRANST LP SI N*BC 184 * X 55 N2081 INDIC
Q 0002	200101840	TRANST LP SI N*BC 184 * X 55 N2081 INDIC
Q 0003	200101840	TRANST LP SI N*BC 184 * X 55 N2081 INDIC
Q 0004	200101840	TRANST LP SI N*BC 184 * X 55 N2081 INDIC
Q 0005	200101840	TRANST LP SI N*BC 184 * X 55 N2081 INDIC
R 0001	116210350	POT 50 K 5%A BOB PIOT AM6,35L20,6 LI=0,25 BECMA 7286
R 0002	116210350	POT 50 K 5%A BOB PIOT AM6,35L20,6 LI=0,25 BECMA 7286
R 0003	041310274	RES 2,74 K 1 % 0,25W METAL 50 PPM N0112
R 0004	041310115	RES 1,15 K 1 % 0,25W METAL 50 PPM N0112
R 0005	016432200	RES 2,2 M 5 % 0,25W CARBON N0102

REPERE TOPO.	COMPOSANT NO ARTICLE	COMPOSANT DESIGNATION
R 0006	016410100	RES 1,0 K 5 % 0,25W CARBON N0102
R 0007	016401500	RES 150 OHM 5 % 0,25W CARBON N0102
R 0008	016422200	RES 220 K 5 % 0,25W CARBON N0102
R 0009	016405600	RES 560 OHM 5 % 0,25W CARBON N0102
R 0010	016408200	RES 820 OHM 5 % 0,25W CARBON N0102
R 0011	058034900	RES 9 M 1 % 0,6 W CERMET SFERN RHV-1
RR0001	087813488	RESEAU RES 220 K 4 2 % IDEN SIL 8 SFERN SIL8-4
RR0002	087813319	RESEAU RES 4,7 K 4 2 % IDEN SIL 8 SFERN SIL8-4
RR0003	087813160	RESEAU RES 150 OHM 4 2 % IDEN SIL 8 SFERN SIL 8-4
R12-13 14-15	035203145	4 RESIST. 150 OHM 0,25 W
S 0001	218160102	COMMUT MODUL 1TOU 2P 1C BRONZ AG JEANR MDP S-PROF SANS BOUT
U 0001	200704020	AFF 7SEG LED 7,6MM ROUGE BU PDD HP--- 5082 7736
U 0002	200777400	AFF 7SEG LED 8 MM ROUGE CC PDD HP--- 5082 7740
U 0003	200777400	AFF 7SEG LED 8 MM ROUGE CC PDD HP--- 5082 7740
U 0004	200777400	AFF 7SEG LED 8 MM ROUGE CC PDD HP--- 5082 7740
U 0005	266475492	CI INT LIN *MC 75492 *INTERF DIL 14 MOTOR
U 0006	264045110	CI INT LOG CMS MC 14511BCP DECOD DIL 16 N2205
Z 0005	75224070506	RECAP CI Z5 VOLTEMETRE

7 5224 1041 Circuit Z6 - Clavier

REPERE TOPO.	COMPOSANT N° ARTICLE	COMPOSANT DESIGNATION	
	652240804	SCHEMA ELECTRIQUE CD PANNEAU AVANT	5224
	75224070602	RECAP CI Z6	5224
	874041026	BOUTON COMMUTATEUR ADISQUE	5537
	876544006	BUTEE POUR CI	5224
CR0001	200707001	DIOD LUMIN 3 MM VERTE SIEMS CQV35E	2,30
CR0002	200707001	DIOD LUMIN 3 MM VERTE SIEMS CQV35E	2,30
CR0003	200707001	DIOD LUMIN 3 MM VERTE SIEMS CQV35E	2,30
CR0004	200707001	DIOD LUMIN 3 MM VERTE SIEMS CQV35E	2,30
CR0005	200707001	DIOD LUMIN 3 MM VERTE SIEMS CQV35E	2,30
CR0006	200707001	DIOD LUMIN 3 MM VERTE SIEMS CQV35E	2,30
CR0007	200707001	DIOD LUMIN 3 MM VERTE SIEMS CQV35E	2,30
CR0008	200707001	DIOD LUMIN 3 MM VERTE SIEMS CQV35E	2,30
CR0009	200707001	DIOD LUMIN 3 MM VERTE SIEMS CQV35E	2,30
CR0010	200707001	DIOD LUMIN 3 MM VERTE SIEMS CQV35E	2,30
CR0011	200707001	DIOD LUMIN 3 MM VERTE SIEMS CQV35E	2,30
CR0012	200707001	DIOD LUMIN 3 MM VERTE SIEMS CQV35E	2,30
CR0013	200707001	DIOD LUMIN 3 MM VERTE SIEMS CQV35E	2,30
CR0014	200707001	DIOD LUMIN 3 MM VERTE SIEMS CQV35E	2,30
CR0015	200707001	DIOD LUMIN 3 MM VERTE SIEMS CQV35E	2,30
CR0016	200707001	DIOD LUMIN 3 MM VERTE SIEMS CQV35E	2,30
CR0017	200707001	DIOD LUMIN 3 MM VERTE SIEMS CQV35E	2,30
CR0018	200707001	DIOD LUMIN 3 MM VERTE SIEMS CQV35E	2,30
CR0019	200744840	DIOD LUMIN 3 MM ROUGE HP--- HLMP-1000 5082-4480	
CR0020	200744840	DIOD LUMIN 3 MM ROUGE HP--- HLMP-1000 5082-4480	
CR0021	200744840	DIOD LUMIN 3 MM ROUGE HP--- HLMP-1000 5082-4480	

REPERE TOPO.	COMPOSANT N° ARTICLE	COMPOSANT DESIGNATION	
CR0022	200707001	DIOD LUMIN 3 MM VERTE SIEMS CQV35E	2,30
CR0023	200707001	DIOD LUMIN 3 MM VERTE SIEMS CQV35E	2,30
CR0024	200707001	DIOD LUMIN 3 MM VERTE SIEMS CQV35E	2,30
CR0025	200707001	DIOD LUMIN 3 MM VERTE SIEMS CQV35E	2,30
CR0026	200707001	DIOD LUMIN 3 MM VERTE SIEMS CQV35E	2,30
CR0027	200707001	DIOD LUMIN 3 MM VERTE SIEMS CQV35E	2,30
CR0028	200707001	DIOD LUMIN 3 MM VERTE SIEMS CQV35E	2,30
CR0029	200707001	DIOD LUMIN 3 MM VERTE SIEMS CQV35E	2,30
CR0030	200707001	DIOD LUMIN 3 MM VERTE SIEMS CQV35E	2,30
CR0031	200707001	DIOD LUMIN 3 MM VERTE SIEMS CQV35E	2,30
CR0032	200707001	DIOD LUMIN 3 MM VERTE SIEMS CQV35E	2,30
CR0033	200707001	DIOD LUMIN 3 MM VERTE SIEMS CQV35E	2,30
RR0001	087810319	RESEAU RES 2,7 K 7 2 % IDEN SIL 8 N0190	
RR0002	087810319	RESEAU RES 2,7 K 7 2 % IDEN SIL 8 N0190	
RR0003	087810319	RESEAU RES 2,7 K 7 2 % IDEN SIL 8 N0190	
RR0004	087810319	RESEAU RES 2,7 K 7 2 % IDEN SIL 8 N0190	
RR0005	087810319	RESEAU RES 2,7 K 7 2 % IDEN SIL 8 N0190	
S 0001	218160102	COMMUT MODUL 1TOU 2P 1C BRONZ AG JEANR MDP S-PROF SANS BOUT	
S 0002	218160102	COMMUT MODUL 1TOU 2P 1C BRONZ AG JEANR MDP S-PROF SANS BOUT	
S 0003	218160102	COMMUT MODUL 1TOU 2P 1C BRONZ AG JEANR MDP S-PROF SANS BOUT	
S 0004	218160102	COMMUT MODUL 1TOU 2P 1C BRONZ AG JEANR MDP S-PROF SANS BOUT	
S 0005	218160102	COMMUT MODUL 1TOU 2P 1C BRONZ AG JEANR MDP S-PROF SANS BOUT	
S 0006	218160102	COMMUT MODUL 1TOU 2P 1C BRONZ AG JEANR MDP S-PROF SANS BOUT	
S 0007	218160102	COMMUT MODUL 1TOU 2P 1C BRONZ AG JEANR MDP S-PROF SANS BOUT	
S 0008	218160102	COMMUT MODUL 1TOU 2P 1C BRONZ AG JEANR MDP S-PROF SANS BOUT	

7 5224 1041 Circuit Z6 - Clavier

REPERE TOPO.	COMPOSANT N° ARTICLE	COMPOSANT DESIGNATION
S 0009	218160102	COMMUT MODUL 1TOU 2P 1C BRONZ AG JEANR MDP S-PROF SANS BOUT
S 0010	218160102	COMMUT MODUL 1TOU 2P 1C BRONZ AG JEANR MDP S-PROF SANS BOUT
S 0011	218160102	COMMUT MODUL 1TOU 2P 1C BRONZ AG JEANR MDP S-PROF SANS BOUT
S 0012	218160102	COMMUT MODUL 1TOU 2P 1C BRONZ AG JEANR MDP S-PROF SANS BOUT
S 0013	218160102	COMMUT MODUL 1TOU 2P 1C BRONZ AG JEANR MDP S-PROF SANS BOUT
S 0014	218160102	COMMUT MODUL 1TOU 2P 1C BRONZ AG JEANR MDP S-PROF SANS BOUT
S 0015	218160102	COMMUT MODUL 1TOU 2P 1C BRONZ AG JEANR MDP S-PROF SANS BOUT
S 0016	218160102	COMMUT MODUL 1TOU 2P 1C BRONZ AG JEANR MDP S-PROF SANS BOUT
S 0017	218160102	COMMUT MODUL 1TOU 2P 1C BRONZ AG JEANR MDP S-PROF SANS BOUT

7 5224 1103 Circuit Z7 - Entrée Y (voies A, B ou C)

REPERE TOPO.	COMPOSANT NO ARTICLE	COMPOSANT DESIGNATION
	253504100	PASFIL ANNEAU 4 0,8 CAOUT ROUGE MFOM- 751
	304002060	RONDEL PLAT 2,6X 6 X 0,5 LAITN NICK MFOM- 1A
	304002061	RONDEL PLAT 2,6X 6 X 1 ACIER NICK MFOM- 1A
	304302510	RONDEL DENTS DE 2,5X 5,5X 0,3 ACIER INOX N6333 NF-E27-618
	309102515	VIS C M 2,5X15 ACIER INOX LONG SP
	313406251	ECROU SERTI M 2,5 0,8 A 1 ACIER CADM OTALU 3330-025- 0001
	652240810	SCHEMA ELECTRIQUE PREAMPLI VOIE A 5224
	752240707	RECAP CI Z7 5224
	810500062	REPERAGE NOTICE CI ENTREE 5224
	834504007MG	COLONNETTE 3,2X5 H=9MM 5224
	841132029	EQUERRE BLINDAGE ENTREE Y VOIES A-B-C-D
	899009758	MONTAGE ENTREE Y VOIES ABCD 5224
C 0001	149002205	CAP 22 PF 5 % 63V CERAM I 508 NO245
C 0002	176505410	CAP 0,1 MF 10 % 250V POLYEST RAD 100 SIEMS B32511-03104-K
J 0100	213202900	CONNEC COAX EMBAS FEM IC SOUD BNC 50OHM RADIA R 141404- UG 290A/U
R 0001	035203047	RES 47 OHM 5 % 0,12W METAL 100 PPM NO101
S 0010	892700025	COMMUTATEUR A GLISSIERE VOIR PLAN 5224 SEUFF

7 5277 1032 Circuit Z8 - Post-accélération

REPERE TOPO.	COMPOSANT NO ARTICLE	COMPOSANT DESIGNATION
	300540143	CABLA FIXAT ENTRETOISE CLIPSABLE NYLON 952 RICHC CBS-6N
	652770803	SCHEMA ELEC THT AMPLI ALLUMAGE 5277
	752770708	RECAP CI Z8 PA. 5277
	810500064	PLAN DE REPERAGE NOTICE CI Z8 5277
	867542283	PLAQUETTE PROTECTION CI PA 5277
C 0001	147736147	CAP 470 PF-20+50 3000V CERAM 2 LCC-- QCX 608
C 0002	147736147	CAP 470 PF-20+50 3000V CERAM 2 LCC-- QCX 608
C 0003	147736147	CAP 470 PF-20+50 3000V CERAM 2 LCC-- QCX 608
C 0004	147736147	CAP 470 PF-20+50 3000V CERAM 2 LCC-- QCX 608
C 0005	147736147	CAP 470 PF-20+50 3000V CERAM 2 LCC-- QCX 608
C 0006	147736147	CAP 470 PF-20+50 3000V CERAM 2 LCC-- QCX 608
C 0007	147736147	CAP 470 PF-20+50 3000V CERAM 2 LCC-- QCX 608
C 0008	147736147	CAP 470 PF-20+50 3000V CERAM 2 LCC-- QCX 608
CR0001	200304090	DIOD REDRES*BY 509 * 12,5K 4 MA RTC--
CR0002	200304090	DIOD REDRES*BY 509 * 12,5K 4 MA RTC--
CR0003	200304090	DIOD REDRES*BY 509 * 12,5K 4 MA RTC--
CR0004	200304090	DIOD REDRES*BY 509 * 12,5K 4 MA RTC--
CR0005	200304090	DIOD REDRES*BY 509 * 12,5K 4 MA RTC--
CR0006	200304090	DIOD REDRES*BY 509 * 12,5K 4 MA RTC--
CR0007	200304090	DIOD REDRES*BY 509 * 12,5K 4 MA RTC--
CR0008	200304090	DIOD REDRES*BY 509 * 12,5K 4 MA RTC--
P 0001	214421036	CONNEC CI IMP FMB MAL 3C PICO COUDE 396 MOLEX 26-10-2031 3246-3A
R 0001	068100568	RES 6,8 M 5 % 0,5 W METAL RTC-- VR 37
R 0002	068100568	RES 6,8 M 5 % 0,5 W METAL RTC-- VR 37

7 5277 1251 Circuit Z9 - Mémoire

REPERE TOPO.	COMPOSANT NO ARTICLE	COMPOSANT DESIGNATION
	200241400	SUPP 14C DIL 14 SOUD CU-AL ETAME N2500
	200241600	SUPP 16C DIL 16 SOUD CU-AL ETAME N2500
	214447330	CONNEC CI IMP EMB MAL IC POST BERG- 47310
	652770825	SCHEMA ELEC MEMOIRE 2 5277
	752770709	RECAP CI Z9 MEMOIRE 5277
C 0001	156604737	CAP 4,7 MF-20+100 63V CHIMIC NO221
C 0002	161401037	CAP 1 MF-10+50 63V CHIMIC RTC-- 2222-030- X8108
C 0003	163020910	CAP 1 MF 20 % 25V CHIMIC RAD 508 RTC-- 2222-122- 56108
C 0004	163020910	CAP 1 MF 20 % 25V CHIMIC RAD 508 RTC-- 2222-122- 56108
C 0005	163020910	CAP 1 MF 20 % 25V CHIMIC RAD 508 RTC-- 2222-122- 56108
C 0006	163020910	CAP 1 MF 20 % 25V CHIMIC RAD 508 RTC-- 2222-122- 56108
C 0007	149511005	CAP 1000 PF 10 % 63V CERAM 2 NO242
C 0008	149511005	CAP 1000 PF 10 % 63V CERAM 2 NO242
C 0009	149010101	CAP 100 PF 5 % 63V CERAM 1 508 NO245
C 0010	149511005	CAP 1000 PF 10 % 63V CERAM 2 NO242
C 0011	145501410	CAP 0,1 MF-20+80 25V CERAM 3 RAD 508 LCC-- GFO 611 UB
C 0012	149210691	CAP 680 PF 10 % 500V CERAM 2 NO243
C 0013	149511005	CAP 1000 PF 10 % 63V CERAM 2 NO242
C 0014	149511005	CAP 1000 PF 10 % 63V CERAM 2 NO242
C 0015	149010101	CAP 100 PF 5 % 63V CERAM 1 508 NO245
C 0016	177328333	CAP 33000 PF-20+100 63V CERAM 2 NO242
C 0018	170522201	CAP 22000 PF 20 % 250V POLYEST NO263
C 0019	145501410	CAP 0,1 MF-20+80 25V CERAM 3 RAD 508 LCC-- GFO 611 UB
C 0020	149004705	CAP 47 PF 5 % 63V CERAM 1 508 NO245

REPERE TOPO.	COMPOSANT NO ARTICLE	COMPOSANT DESIGNATION
C 0021	190012310	CAP10000 PF-20+100 63V CERAM 2 NO242
C 0022	145501410	CAP 0,1 MF-20+80 25V CERAM 3 RAD 508 LCC-- GFO 611 UB
C 0023	149321002	CAP10000 PF-20+100 63V CERAM 2 NO242
C 0024	149321002	CAP10000 PF-20+100 63V CERAM 2 NO242
C 0025	149321002	CAP10000 PF-20+100 63V CERAM 2 NO242
C 0026	156612219	CAP 22 MF-20+100 25V CHIMIC NO221
C 0027	149321002	CAP10000 PF-20+100 63V CERAM 2 NO242
C 0028	149321002	CAP10000 PF-20+100 63V CERAM 2 NO242
C 0029	149321002	CAP10000 PF-20+100 63V CERAM 2 NO242
C 0030	156604737	CAP 4,7 MF-20+100 63V CHIMIC NO221
C 0031	156604737	CAP 4,7 MF-20+100 63V CHIMIC NO221
C 0032	149010101	CAP 100 PF 5 % 63V CERAM 1 508 NO245
C 0033	163020910	CAP 1 MF 20 % 25V CHIMIC RAD 508 RTC-- 2222-122- 56108
C 0034	156808122	CAP 220 MF-10+100 10V CHIMIC RAD 508 ROEDE EK00EB322C
C 0035	156803122	CAP 220 MF-10+100 10V CHIMIC RAD 508 ROEDE EK00EB322C
C 0036	149511505	CAP 1500 PF 20 % 63V CERAM 2 NO242
C 0037	149010101	CAP 100 PF 5 % 63V CERAM 1 508 NO245
C 0038	156611019	CAP 10 MF-20+100 25V CHIMIC NO221
C 0039	149321002	CAP10000 PF-20+100 63V CERAM 2 NO242
C 0040	149321002	CAP10000 PF-20+100 63V CERAM 2 NO242
C 0041	149321002	CAP10000 PF-20+100 63V CERAM 2 NO242
C 0042	149321002	CAP10000 PF-20+100 63V CERAM 2 NO242
C 0043	145501410	CAP 0,1 MF-20+80 25V CERAM 3 RAD 508 LCC-- GFO 611 UB
C 0044	145501410	CAP 0,1 MF-20+80 25V CERAM 3 RAD 508 LCC-- GFO 611 UB
C 0045	145501410	CAP 0,1 MF-20+80 25V CERAM 3 RAD 508 LCC-- GFO 611 UB

7 5277 1251 Circuit Z9 - Mémoire

REPERE TOPO.	COMPOSANT NO ARTICLE	COMPOSANT DESIGNATION
C 0046	145501410	CAP 0,1 MF-20+80 25V CERAM 3 RAD 508 LCC-- GEO 611 UB
C 0047	149321002	CAP10000 PF-20+100 63V CERAM 2 NO242
C 0048	149511005	CAP 1000 PF 10 % 63V CERAM 2 NO242
C 0049	149321002	CAP10000 PF-20+100 63V CERAM 2 NO242
CR0001	200344480	DIOD SPCIAL* 1N4448 * 75 V SWITC TEXAS INDIC
CR0002	200344480	DIOD SPCIAL* 1N4448 * 75 V SWITC TEXAS INDIC
CR0003	200344480	DIOD SPCIAL* 1N4448 * 75 V SWITC TEXAS INDIC
CR0004	200344480	DIOD SPCIAL* 1N4448 * 75 V SWITC TEXAS INDIC
CR0005	200344480	DIOD SPCIAL* 1N4448 * 75 V SWITC TEXAS INDIC
CR0006	200344480	DIOD SPCIAL* 1N4448 * 75 V SWITC TEXAS INDIC
CR0007	200344480	DIOD SPCIAL* 1N4448 * 75 V SWITC TEXAS INDIC
CR0008	200344480	DIOD SPCIAL* 1N4448 * 75 V SWITC TEXAS INDIC
CR0009	200344480	DIOD SPCIAL* 1N4448 * 75 V SWITC TEXAS INDIC
CR0010	200344480	DIOD SPCIAL* 1N4448 * 75 V SWITC TEXAS INDIC
CR0011	200344480	DIOD SPCIAL* 1N4448 * 75 V SWITC TEXAS INDIC
CR0012	200344480	DIOD SPCIAL* 1N4448 * 75 V SWITC TEXAS INDIC
CR0013	200344480	DIOD SPCIAL* 1N4448 * 75 V SWITC TEXAS INDIC
CR0014	200344480	DIOD SPCIAL* 1N4448 * 75 V SWITC TEXAS INDIC
CR0015	200344480	DIOD SPCIAL* 1N4448 * 75 V SWITC TEXAS INDIC
CR0016	200344480	DIOD SPCIAL* 1N4448 * 75 V SWITC TEXAS INDIC
CR0017	200344480	DIOD SPCIAL* 1N4448 * 75 V SWITC TEXAS INDIC
CR0018	200344480	DIOD SPCIAL* 1N4448 * 75 V SWITC TEXAS INDIC
CR0019	200455082	DIOD ZENER *BZX 55 * 8,2V 5,0MA SESCO INDIC
CR0020	200344480	DIOD SPCIAL* 1N4448 * 75 V SWITC TEXAS INDIC
CR0021	200344480	DIOD SPCIAL* 1N4448 * 75 V SWITC TEXAS INDIC
CR0022	200455051	DIOD ZENER *BZX 55 * 5,1V 5,0MA SESCO INDIC
CR0023	200344480	DIOD SPCIAL* 1N4448 * 75 V SWITC TEXAS INDIC
CR0024	200344480	DIOD SPCIAL* 1N4448 * 75 V SWITC TEXAS INDIC
CR0025	200335950	DIOD GENERL 1N3595E 3DHD 150V 200MA THOS
CR0026	200455051	DIOD ZENER *BZX 55 * 5,1V 5,0MA SESCO INDIC
CR0027	200455051	DIOD ZENER *BZX 55 * 5,1V 5,0MA SESCO INDIC
CR0028	200455100	DIOD ZENER *BZX 55 * 10 V 5,0MA SESCO INDIC
CR0029	200344480	DIOD SPCIAL* 1N4448 * 75 V SWITC TEXAS INDIC
CR0030	200344480	DIOD SPCIAL* 1N4448 * 75 V SWITC TEXAS INDIC
CR0031	200344480	DIOD SPCIAL* 1N4448 * 75 V SWITC
CR0032	200335950	DIOD GENERL 1N3595 3DHD 150V 200MA
Q 0001	200123693	TRANST LP SI N*MPS 2369 * TO 92 MOTOR
Q 0002	200101840	TRANST LP SI N*BC 184 * X 55 N2081 INDIC
Q 0003	200101840	TRANST LP SI N*BC 184 * X 55 N2081 INDIC
Q 0004	200101840	TRANST LP SI N*BC 184 * X 55 N2081 INDIC
Q 0005	200123693	TRANST LP SI N*MPS 2369 * TO 92 MOTOR
Q 0006	200142581	TRANST LP SI P*PN 4258 * TO 92 NS--- INDIC
Q 0007	200123693	TRANST LP SI N*MPS 2369 * TO 92 MOTOR
Q 0008	200123693	TRANST LP SI N*MPS 2369 * TO 92 MOTOR
Q 0009	200101840	TRANST LP SI N*BC 184 * X 55 N2081 INDIC
Q 0010	200102142	TRANST LP SI P*BC 214 * X 55 N2081 INDIC
Q 0011	200101840	TRANST LP SI N*BC 184 * X 55 N2081 INDIC
Q 0012	200102142	TRANST LP SI P*BC 214 * X 55 N2081 INDIC
Q 0013	200102142	TRANST LP SI P*BC 214 * X 55 N2081 INDIC
R 0001	016420510	RES 51 K 5 % 0,25W CARBON NO102
R 0002	016420750	RES 75 K 5 % 0,25W CARBON NO102

7 5277 1251

Circuit Z9 - Mémoire

REPERE TOPO.	COMPOSANT NO ARTICLE	COMPOSANT DESIGNATION
R 0003	016423000	RES 300 K 5 % 0,25W CARBON N0102
R 0004	016425600	RES 560 K 5 % 0,25W CARBON N0102
R 0005	016422400	RES 240 K 5 % 0,25W CARBON N0102
R 0006	016420820	RES 82 K 5 % 0,25W CARBON N0102
R 0007	016422200	RES 220 K 5 % 0,25W CARBON N0102
R 0008	108600310	POT 10 K 20%A CER TRIM ROND HOR 0,75W CI SFERN T7YB
R 0009	041320249	RES 24,9 K 1 % 0,25W METAL 50 PPM N0112
R 0010	041320200	RES 20 K 1 % 0,25W METAL 50 PPM N0112
R 0011	016420750	RES 75 K 5 % 0,25W CARBON N0102
R 0012	105400422	POT 220 K 20%A CAR TRIM PLAQ HOR CI PIHER PT10 LV
R 0013	016421800	RES 180 K 5 % 0,25W CARBON N0102
R 0014	016420300	RES 30 K 5 % 0,25W CARBON N0102
R 0015	016410300	RES 3,0 K 5 % 0,25W CARBON N0102
R 0016	016420120	RES 12 K 5 % 0,25W CARBON N0102
R 0017	016410820	RES 8,2 K 5 % 0,25W CARBON N0102
R 0018	016422000	RES 200 K 5 % 0,25W CARBON N0102
R 0019	016423900	RES 390 K 5 % 0,25W CARBON N0102
R 0020	016421000	RES 100 K 5 % 0,25W CARBON N0102
R 0021	016421500	RES 150 K 5 % 0,25W CARBON N0102
R 0022	016420100	RES 10 K 5 % 0,25W CARBON N0102
R 0023	016420100	RES 10 K 5 % 0,25W CARBON N0102
R 0024	016420100	RES 10 K 5 % 0,25W CARBON N0102
R 0025	016427500	RES 750 K 5 % 0,25W CARBON N0102
R 0026	016420100	RES 10 K 5 % 0,25W CARBON N0102
R 0027	016432200	RES 2,2 M 5 % 0,25W CARBON N0102

REPERE TOPO.	COMPOSANT NO ARTICLE	COMPOSANT DESIGNATION
R 0028	016421000	RES 100 K 5 % 0,25W CARBON N0102
R 0029	016421000	RES 100 K 5 % 0,25W CARBON N0102
R 0030	016431000	RES 1,0 M 5 % 0,25W CARBON N0102
R 0031	016421000	RES 100 K 5 % 0,25W CARBON N0102
R 0032	016736800	RES 6,8 M 5 % 0,5 W CARBON N0106
R 0033	016420100	RES 10 K 5 % 0,25W CARBON N0102
R 0034	108600322	POT 22 K 20%A CER TRIM ROND HOR 0,75W CI SFERN T7YB
R 0035	016421100	RES 110 K 5 % 0,25W CARBON N0102
R 0036	016421100	RES 110 K 5 % 0,25W CARBON N0102
R 0037	108600347	POT 47 K 20%A CER TRIM ROND HOR 0,75W CI SFERN T7YB
R 0038	016420910	RES 91 K 5 % 0,25W CARBON N0102
R 0039	108600310	POT 10 K 20%A CER TRIM ROND HOR 0,75W CI SFERN T7YB
R 0040	016420560	RES 56 K 5 % 0,25W CARBON N0102
R 0041	041320267	RES 26,7 K 1 % 0,25W METAL 50 PPM N0112
R 0042	016420750	RES 75 K 5 % 0,25W CARBON N0102
R 0043	041320511	RES 51,1 K 1 % 0,25W METAL 50 PPM N0112
R 0044	016420130	RES 13 K 5 % 0,25W CARBON N0102
R 0045	016410180	RES 1,8 K 5 % 0,25W CARBON N0102
R 0046	016420180	RES 18 K 5 % 0,25W CARBON N0102
R 0047	016420120	RES 12 K 5 % 0,25W CARBON N0102
R 0048	016400100	RES 10 OHM 5 % 0,25W CARBON N0102
R 0049	035203239	RES 3,9 K 5 % 0,12W METAL 150 PPM N0101
R 0050	016423900	RES 390 K 5 % 0,25W CARBON N0102
R 0051	108600422	POT 220 K 20%A CER TRIM ROND HOR SFERN T7YB
R 0052	016420300	RES 30 K 5 % 0,25W CARBON N0102

7 5277 1251

Circuit Z9 - Mémoire

REPERE TOPO.	COMPOSANT NO ARTICLE	COMPOSANT DESIGNATION
R 0053	016420150	RES 15 K 5 % 0,25W CARBON N0102
R 0054	016421000	RES 100 K 5 % 0,25W CARBON N0102
R 0055	016421000	RES 100 K 5 % 0,25W CARBON N0102
R 0056	016425100	RES 510 K 5 % 0,25W CARBON N0102
R 0057	016423000	RES 300 K 5 % 0,25W CARBON N0102
R 0058	035203310	RES 10 K 5 % 0,12W METAL 100 PPM N0101
R 0059	016422200	RES 220 K 5 % 0,25W CARBON N0102
R 0060	016421000	RES 100 K 5 % 0,25W CARBON N0102
R 0061	016425100	RES 510 K 5 % 0,25W CARBON N0102
R 0062	041308060	RES 806 OHM 1 % 0,25W METAL 50 PPM N0112
R 0063	041320154	RES 15,4 K 1 % 0,25W METAL 50 PPM N0112
R 0064	041320487	RES 48,7 K 1 % 0,25W METAL 50 PPM N0112
R 0065	041310121	RES 1,21 K 1 % 0,25W METAL 50 PPM N0112
R 0066	108600310	POT 10 K 20%A CER TRIM ROND HOR 0,75W CI SFERN T7YB
R 0067	108600447	POT 470 K 20%A CER TRIM ROND HOR CI SFERN T7YB
R 0068	016424200	RES 420 K 5 % 0,25W CARBON N0102
R 0069	016431000	RES 1,0 M 5 % 0,25W CARBON N0102
R 0070	016410750	RES 7,5 K 5 % 0,25W CARBON N0102
R 0071	016410820	RES 8,2 K 5 % 0,25W CARBON N0102
R 0072	016420100	RES 10 K 5 % 0,25W CARBON N0102
R 0073	016410220	RES 2,2 K 5 % 0,25W CARBON N0102
R 0074	035203330	RES 30 K 5 % 0,12W METAL 100 PPM N0101
R 0075	035203243	RES 4,3 K 5 % 0,12W METAL 100 PPM N0101
R 0076	108600310	POT 10 K 20%A CER TRIM ROND HOR 0,75W CI SFERN T7YB
R 0077	016410510	RES 5,1 K 5 % 0,25W CARBON N0102
R 0078	016407500	RES 750 OHM 5 % 0,25W CARBON N0102
R 0079	016420300	RES 30 K 5 % 0,25W CARBON N0102
R 0080	016420100	RES 10 K 5 % 0,25W CARBON N0102
R 0081	016420470	RES 47 K 5 % 0,25W CARBON N0102
R 0082	016420100	RES 10 K 5 % 0,25W CARBON N0102
R 0083	016405600	RES 560 OHM 5 % 0,25W CARBON N0102
R 0084	016420150	RES 15 K 5 % 0,25W CARBON N0102
R 0085	016420150	RES 15 K 5 % 0,25W CARBON N0102
R 0086	041310121	RES 1,21 K 1 % 0,25W METAL 50 PPM N0112
R 0087	041310348	RES 3,48 K 1 % 0,25W METAL 50 PPM N0112
R 0088	041320453	RES 45,3 K 1 % 0,25W METAL 50 PPM N0112
R 0089	041320154	RES 15,4 K 1 % 0,25W METAL 50 PPM N0112
R 0090	041308060	RES 806 OHM 1 % 0,25W METAL 50 PPM N0112
R 0091	016420150	RES 15 K 5 % 0,25W CARBON N0102
R 0092	108600447	POT 470 K 20%A CER TRIM ROND HOR CI SFERN T7YB
R 0093	016420150	RES 15 K 5 % 0,25W CARBON N0102
R 0094	016423000	RES 300 K 5 % 0,25W CARBON N0102
R 0095	016425100	RES 510 K 5 % 0,25W CARBON N0102
R 0096	016420470	RES 47 K 5 % 0,25W CARBON N0102
R 0097	016420120	RES 12 K 5 % 0,25W CARBON N0102
R 0098	035203410	RES 100 K 5 % 0,12W METAL 100 PPM N0101
U 0001	260040930	CI INT LOG CMC÷MC 14093BCP ÷PORTE DIL 14 MOTOR IMPER
U 0002	264040710	CI INT LOG CMS MC 14071BCP PORTE DIL 14 N2205
U 0003	264040250	CI INT LOG CMS MC 14025BCP PORTE DIL 14 N2205
U 0004	264040750	CI INT LOG CMS MC 14075BCP PORTE DIL 14 N2205

7 5277 1251 Circuit Z9 - Mémoire

REPERE TOPO.	COMPOSANT NO ARTICLE	COMPOSANT DESIGNATION
U 0005	264045841	CI INT LOG CMS*MC 14584BCP *DIVER DIL 14 MOTOR IMPER
U 0006	264040810	CI INT LOG CMS MC 14081BCP PORTE DIL 14 N2205
U 0007	264040710	CI INT LOG CMS MC 14071BCP PORTE DIL 14 N2205
U 0008	264045841	CI INT LOG CMS*MC 14584BCP *DIVER DIL 14 MOTOR IMPER
U 0009	264040130	CI INT LOG CMS MC 14013BCP BISTA TO 116 N2205
U 0010	264040130	CI INT LOG CMS MC 14013BCP BISTA TO 116 N2205
U 0011	264040710	CI INT LOG CMS MC 14071BCP PORTE DIL 14 N2205
U 0012	264040810	CI INT LOG CMS MC 14081BCP PORTE DIL 14 N2205
U 0013	264040750	CI INT LOG CMS MC 14075BCP PORTE DIL 14 N2205
U 0014	264045841	CI INT LOG CMS*MC 14584BCP *DIVER DIL 14 MOTOR IMPER
U 0015	264040810	CI INT LOG CMS MC 14081BCP PORTE DIL 14 N2205
U 0016	264040200	CI INT LOG CMS*MC 14020BCP *COMPT DIL 16 MOTOR
U 0017	264040110	CI INT LOG CMS MC 14011BCP PORTE TO 116 N2205
U 0018	264040660	CI INT LOG CMS*MC 14066BCP *DIVER DIL 14 MOTOR
U 0019	264045841	CI INT LOG CMS*MC 14584BCP *DIVER DIL 14 MOTOR IMPER
U 0020	264040130	CI INT LOG CMS MC 14013BCP BISTA TO 116 N2205
U 0021	264045841	CI INT LOG CMS*MC 14584BCP *DIVER DIL 14 MOTOR IMPER
U 0022	264040750	CI INT LOG CMS MC 14075BCP PORTE DIL 14 N2205
U 0023	264040660	CI INT LOG CMS*MC 14066BCP *DIVER DIL 14 MOTOR
U 0024	264040130	CI INT LOG CMS MC 14013BCP BISTA TO 116 N2205
W 0012	831500238	CORDON DE LIAISON 5277
W 0013	831500238	CORDON DE LIAISON 5277
W 0015	831500243	CORDON DE LIAISON 5277

7 5277 1242 Circuit Z10 - Mémoire

REPERE TOPO.	COMPOSANT NO ARTICLE	COMPOSANT DESIGNATION
	304302510	RONDEL DENTS DE 2,5X 5,5X 0,3 ACIER INOX N6333 NF-E27-618
	309102510	VIS C M 2,5X10 ACIER INOX N6003 NF-E27-115
	309302506	VIS F /120 M 2,5X 6 ACIER INOX N6024
	310000250	ECROU H M 2,5 ACIER INOX N6203 NF-E27-411
	652770824	SCHEMA ELEC MEMOIRE 2 5277
	752770710	RECAP CI Z10 CDE MEMOIRE 5277
	838024039	DOMINO SUPPORT DE CI 5277
	874041026	BOUTON COMMUTATEUR ADISQUE 5537
CR0001	200706001	DIOD LUMIN 3 MM JAUNE HP--- HLMP-1401 5082-4584
CR0002	200707001	DIOD LUMIN 3 MM VERTE 2,30 SIEMS CQV35E
CR0003	200707001	DIOD LUMIN 3 MM VERTE 2,30 SIEMS CQV35E
CR0004	200707001	DIOD LUMIN 3 MM VERTE 2,30 SIEMS CQV35E
CR0005	200706001	DIOD LUMIN 3 MM JAUNE HP--- HLMP-1401 5082-4584
CR0006	200707001	DIOD LUMIN 3 MM VERTE 2,30 SIEMS CQV35E
CR0007	200707001	DIOD LUMIN 3 MM VERTE 2,30 SIEMS CQV35E
CR0008	200744840	DIOD LUMIN 3 MM ROUGE HP--- HLMP-1000 5082-4480
P 0014	214123150	CONNEC CI IMP FEM 15C PICO DROIT 127 TRELC TP15FCID SANS GUIDE
S 0001	218160102	COMMUT MODUL 1TOU 2P 1C BRONZ AG JEANR MDP S-PROF SANS BOUT
S 0002	218160102	COMMUT MODUL 1TOU 2P 1C BRONZ AG JEANR MDP S-PROF SANS BOUT
S 0003	218160102	COMMUT MODUL 1TOU 2P 1C BRONZ AG JEANR MDP S-PROF SANS BOUT
S 0004	218160102	COMMUT MODUL 1TOU 2P 1C BRONZ AG JEANR MDP S-PROF SANS BOUT

7 5277 2412 Circuit Z12 - Mémoire

REPERE TOPO.	COMPOSANT NO ARTICLE	COMPOSANT DESIGNATION
	200241400	SUPP 14C DIL 14 SOUD CU-AL ETAME N2500
	214447330	CONNEC CI IMP EMB MAL 1C POST BERG- 47310
	214447331	CONNEC CI IMP EMB MAL 1C POST BERG- 47311
	214447439	CONNEC CARRE FIC FEM 1C SERT MINI PV BERG- 47649
	233500200	CABLE ORDIN 1C S 0,34 1,3 BLAN FILOT EPDF00
	345093080	PILIER HEXA 5 X 8 M 3 LAITN NICK N6708
	752770712	RECAP CI Z12 5277
	889504051	CONNEC BOIT 5 ALVEOLES PRIS DANS 2144 5039L
CR0001	200441110	DIOD ZENER * 1N4104 * 10 V 250 UA MOTOR
Q 0001	200101840	TRANST LP SI N*BC 184 * X 55 N2081 INDIC
Q 0002	200103920	TRANST HP SI N*BF 392 * TO 92 MOTOR
Q 0003	200103920	TRANST HP SI N*BF 392 * TO 92 MOTOR
Q 0004	200103920	TRANST HP SI N*BF 392 * TO 92 MOTOR
Q 0005	200104920	TRANST LP SI P*BF 492 * TO 92 MOTOR
R 0001	016420150	RES 15 K 5 % 0,25W CARBON N0102
R 0002	016410300	RES 3,0 K 5 % 0,25W CARBON N0102
R 0003	016420150	RES 15 K 5 % 0,25W CARBON N0102
R 0004	108600322	POT 22 K 20%A CER TRIM ROND HOR 0,75W CI SFERN T7YB
R 0005	016420620	RES 62 K 5 % 0,25W CARBON N0102
R 0006	016420390	RES 39 K 5 % 0,25W CARBON N0102
R 0007	016420150	RES 15 K 5 % 0,25W CARBON N0102
R 0008	016420750	RES 75 K 5 % 0,25W CARBON N0102
R 0009	016426800	RES 680 K 5 % 0,25W CARBON N0102
R 0010	016421500	RES 150 K 5 % 0,25W CARBON N0102
U 0001	264040810	CI INT LOG CMS MC 14081BCP PORTE DIL 14 N2205

7 5277 0450

Interconnexion chassis

COMPOSANT NO ARTICLE	INDICE MODIF	COMPOSANT DESIGNATION
016401000		RES 130 OHM 5 % 0,25W CARBON NO102
203730250	01	CABLA SUPPORT TUBE 14 POLES SOUD AEG-T 003509
214429001	01	CONNEC LIMAND ACCES CONTACT A SERTIR 18 A 22 MOLEX 08-50-0189-6838-901L
214429003	00	CONNEC LIMAND ACCES CONTACT FEM A SERTIR MOLEX 02-09-1103-1189-TL
214429008	01	CONNEC LIMAND ACCES CONTACT A SERTIR 22 A 26 MOLEX 08-50-0185 7258-901L
214429041	00	CONNEC LIMAND ACCES BOITIER FEM 4C AV UREIL MOLEX 03-09-1041-1490-R
214429062	00	CONNEC LIMAND ACCES BOITIER 6C AV/RP-SS CLE MOLEX 09-91-0600 3069-6
214429101	00	CONNEC LIMAND ACCES BOITIER 10C AV/RP-SS CLE MOLEX 09-91-1000 3069-10
214429901	00	CONNEC LIMAND ACCES CLE DE POLAR SS BROCHE MOLEX 15-04-0219 2560-1
214447439		CONNEC CARRE FIC FEM 1C SERT MINI PV BERG- 47649
214447439		CONNEC CARRE FIC FEM 1C SERT MINI PV BERG- 47649
214447439		CONNEC CARRE FIC FEM 1C SERT MINI PV BERG- 47649
214448116	00	CONNEC ROND FICHE MAL 1C SERT BERG- 48116-000
214513115	01	CONNEC CI IMP EMB FEM 1C SOUD TEST 1 COMAT 312-1168-0-00400
233500200		CABLE ORDIN 1C S 0,34 1,3 BLAN FILOT EPDF00
233500200		CABLE ORDIN 1C S 0,34 1,3 BLAN FILOT EPDF00
238502000		CABLE ORDIN 1C S 0,60 2,5 BLAN MAREU ELECTROAIR N1 1VX0,2
241395672	00	CABLE COAX 1C 950HM 3,00 GORE- CSS 512 / NOIR
241506042		CABLE BLIND 2C S 0,38 4,1 BLAN FILOT 604 2X0,38 G 22 BLC
250500400		GAINE PVC 4 MM NOIR CFI-- PVC 40/10
252000116	01	GAINE RETRAC 1,6MM NOIR RAYCH RNF1001/16 NOIR
252000301	01	GAINE RETRAC 4,8MM NOIR RAYCH RNF1003/16 NOIR
252000381	01	GAINE RETRAC 12,7MM TRAN RAYCH RNF 1001/2 TRANSP
252700051	00	GAINE TRESSEE 5 MM NOIR RILSAN MR--- GTR 2000- 5MM NOIR
253000053		MANCHON CAOUT 3,5X20 ROUG HELAVIA SES-- A1 ROUG

REPERE TOPO.	COMPOSANT NO ARTICLE	INDICE MODIF	COMPOSANT DESIGNATION
	253000054		MANCHON CAOUT 3,5X20 NOIR HELAVIA SES-- A1 NOIR
	253000055		MANCHON CAOUT 3,5X20 BLAN HELAVIA SES-- A1 BLAN
	253000056		MANCHON CAOUT 3,5X20 BRUN HELAVIA SES-- A1 BRUN
	253000057		MANCHON CAOUT 3,5X20 VIOL HELAVIA SES-- A1 VIOL
	253000058		MANCHON CAOUT 3,5X20 ORAN HELAVIA SES-- A1 ORAN
	253507450		PASFIL ANNEAU 6,1 1,6 POLYE MEOM- 745
	300100051		CABLA COSSE SOUDER 1 OIR LAITN ETAME MEOM- 5L
	300171820		CABLA COSSE CLIPS SERTI 2,8 LAITN ETAME AMP-- 140 718 2
	300500010		CABLA LIEN BANDE 2,4 92 NYLON BLAN THOMA TYB23M
	300500010		CABLA LIEN BANDE 2,4 92 NYLON BLAN THOMA TYB23M
	300500010		CABLA LIEN BANDE 2,4 92 NYLON BLAN THOMA TYB23M
	300500010		CABLA LIEN BANDE 2,4 92 NYLON BLAN THOMA TYB23M
	300500010		CABLA LIEN BANDE 2,4 92 NYLON BLAN THOMA TYB23M
	309603004		VIS HC M 3 X 4 CUV ACIER N6073 NF-E27-162
	859024005	00	MANCHON RACCORD POT 5221
	862524022MG	00	AXE PROLONGATEUR POT - 5220-5224
	872530064	02	SELF ROT 5500 SS68058
	872530184	00	SELF ORTHOGONALITE 5272
	889504050	00	CONNEC BOIT 4 ALVEOLES PRIS DANS 2144 50391
	889504051	00	CONNEC BOIT 5 ALVEOLES PRIS DANS 2144 50391
	889504053	00	CONNEC BOIT 7 ALVEOLES PRIS DANS 2144 50391
	889509231	00	CONNECT MOLEX 5BROCHES L=30 5538
	889509275	00	CONNECT BARETTE MOLEX RECOUPE 5C-(DURES)
	889600203	00	TRANSFO ALIM TA69656 NOUVELLE VERS. 5277
C 3001	149414701		CAP 4700 PF-20+50 500V CERAM 2 N0243

7 5277 0450 Interconnection chassis

REPERE TOPO.	COMPOSANT NO ARTICLE	INDICE MODIF	COMPOSANT DESIGNATION
C 3002	149414701		CAP 4700 PF-20+50 500V CERAM 2
			NO243
CR3001	200340040	01	DIOD REDRES* IN4004 *400 V 1,0 A
			MOTOR INDIC
R 3001	016720270		RES 27 K 5 % 0,5 W CARBON
			NO106
R 3002	016410100	00	RES 1,0 K 5 % 0,25W CARBON
			NO102

Enertec Instruments

Enertec Instruments
5, rue Daguerre
42030 ST ETIENNE CEDEX 2 - FRANCE
Tél. 77 25 22 64
Télex ENIST 300 796 F
Télécopie n° 77 25 24 94

ENERTEC
Schlumberger