255 S 30/30 WATT HIFI STEREO AMPLIFIER

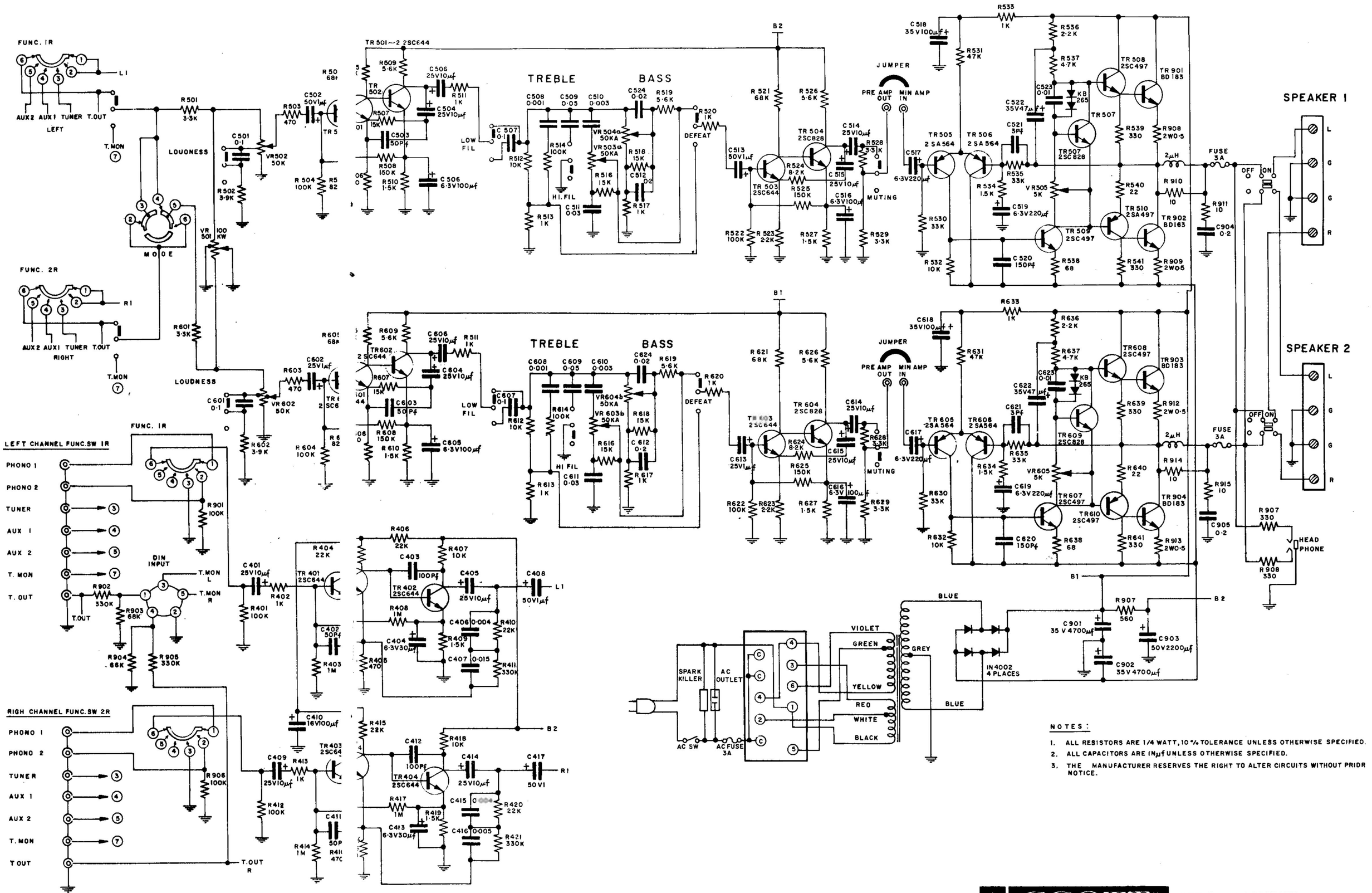

NOTES:

1. ALL RESISTORS ARE 1/4 WATT, 10% TOLERANCE UNLESS OTHERWISE SPECIFIED.
2. ALL CAPACITORS ARE IN μf UNLESS OTHERWISE SPECIFIED.
3. THE MANUFACTURER RESERVES THE RIGHT TO ALTER CIRCUITS WITHOUT PRIOR NOTICE.

SCOTT 255 S AMPLIFIER

SYMA INTERNATIONAL S.A.