Service
Service
Service

Service Manual

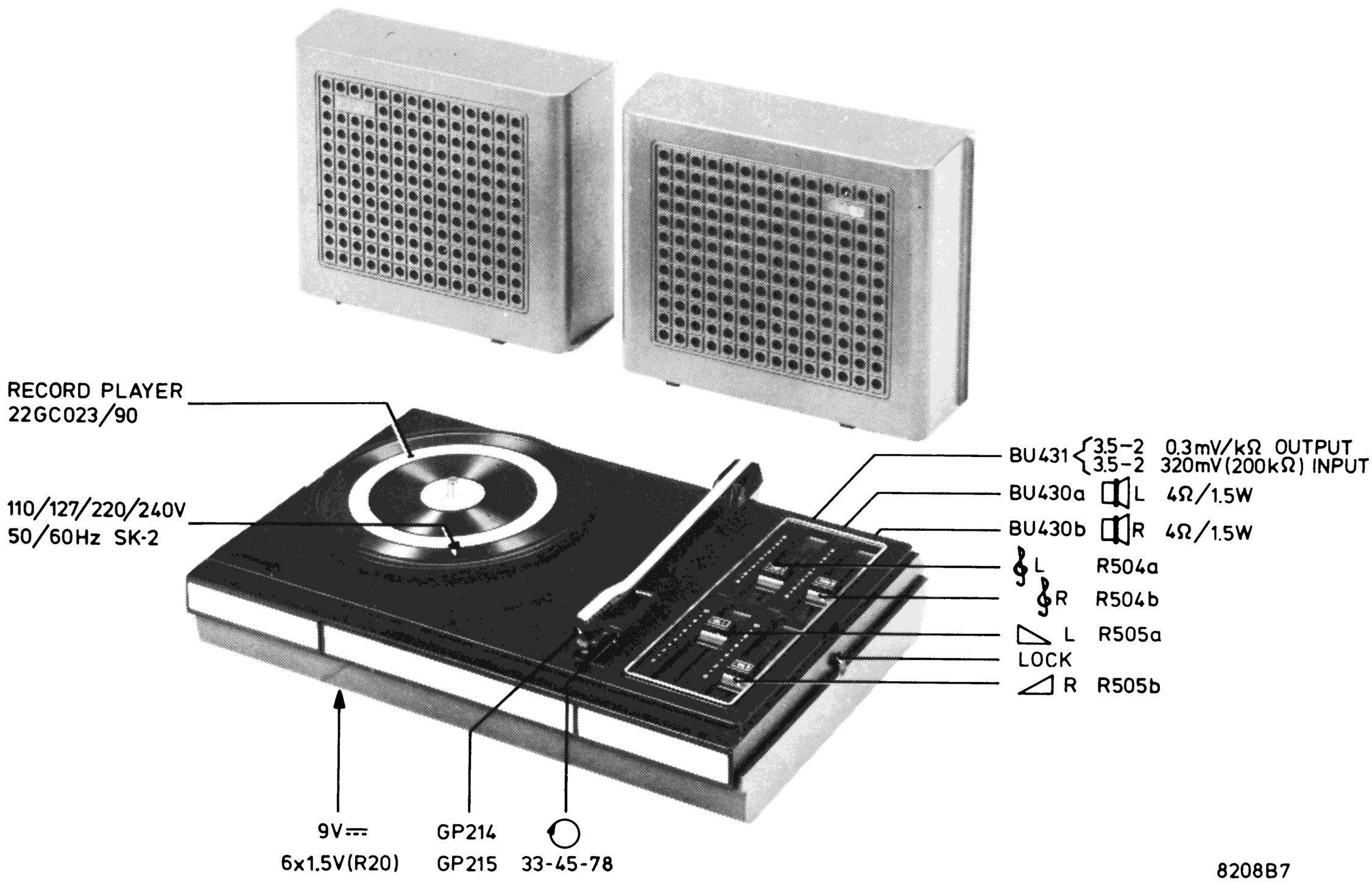

Safety regulations require that the set be restored to its original condition and that parts which are identical with those specified, be used.

Documentation Technique Service Dokumentation Documentazione di Servizio Huolte-Ohje Manual de Servicio Manual de Serviçio

Subject to modification
4822 276 11643
Printed in The Netherlands

PHILIPS

CS54845

CS54846

MISC	BU431 TS401a D404a TS402a TS403a/a TS403b/a BU430a S426a TS451 TS452 M
MISC	TS401b D404b TS402b TS403a/b TS403b/b BU430b S426b SK-1 D476 D475,474 S468 VL462
C	604 601a 602a 603a 605a 606a 607a
C	601b 602b 603b 605b 606b 607b 681
R	509 503a 504a 505a 506a 507a 510a 508a 515a 513a 512a 511a 516a 566 567 568 569 570 571
R	503b 504b 505b 506b 507b 510b 508b 515b 513b 512b 511b 516b

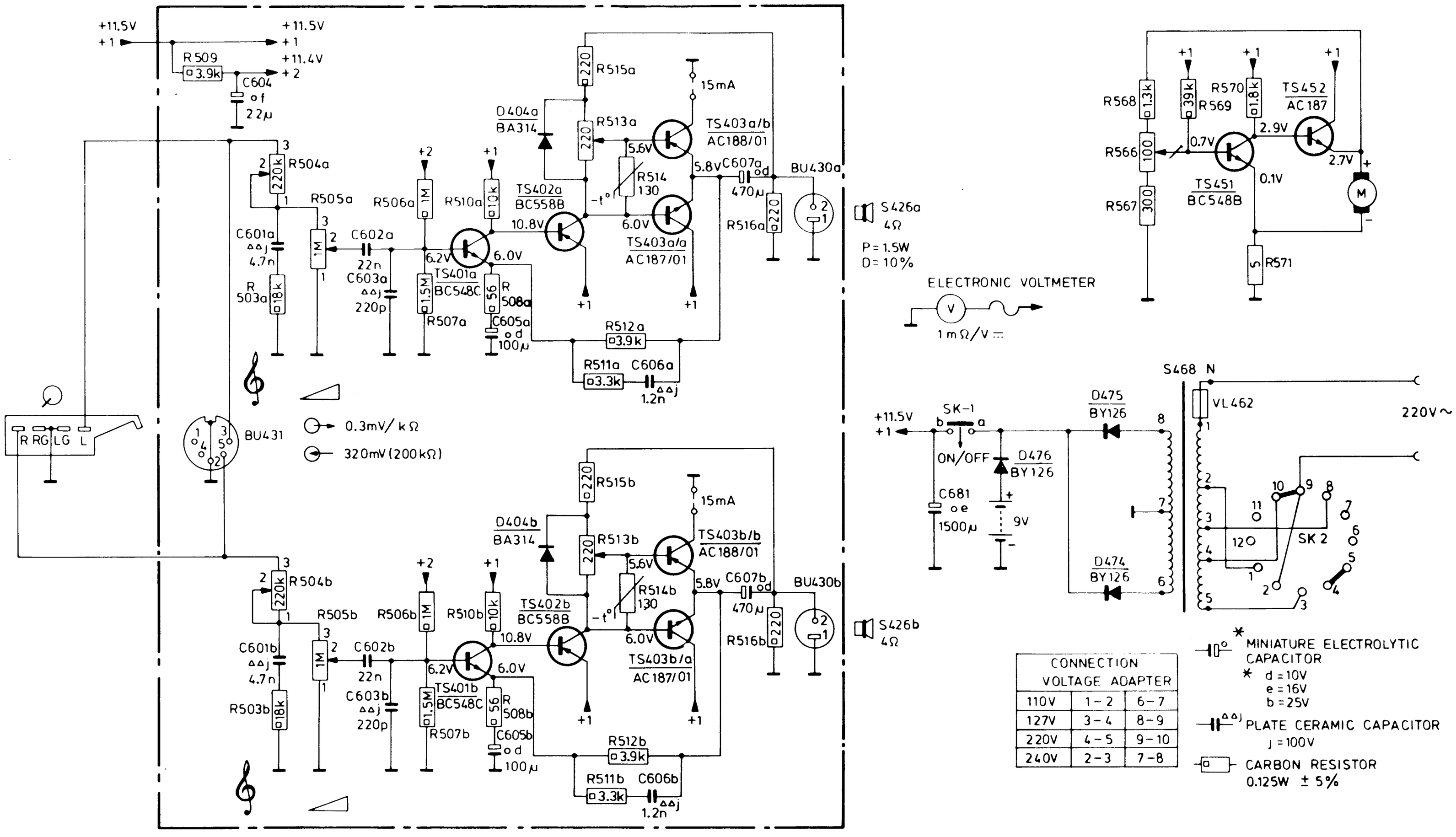

Fig. 1

MISC.	SK-1	M	TS401a.b 402b 403b/a 402a 403a/a S468	D404a	D404b	TS403a/b 403b/b SK-2	BU430a.b . 431	D474···476 TS451.452	MISC
C	605a.b 604	603a.b 602a.b	606a.b	601a.b		607a.b		681	C
R	509	507b 508b 506b 510b	505b 511b 512b 503b	514b	513b	515b 504b 516b		568 567 570 569	R
R		506a 508a	510a 505a 507a 511a 512a	503a	513a	514a 515a 504a 516a		566 571	R

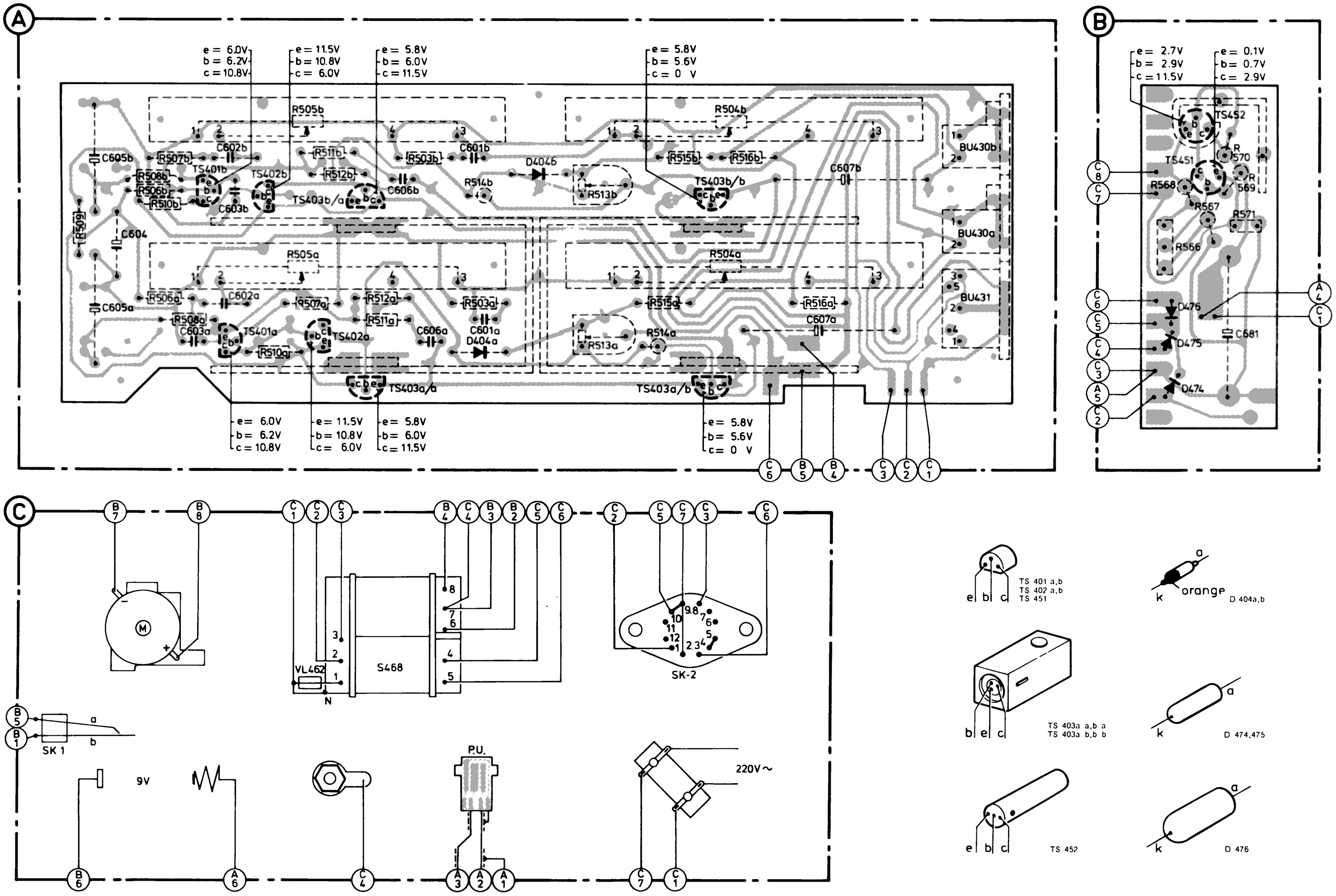

Fig. 2

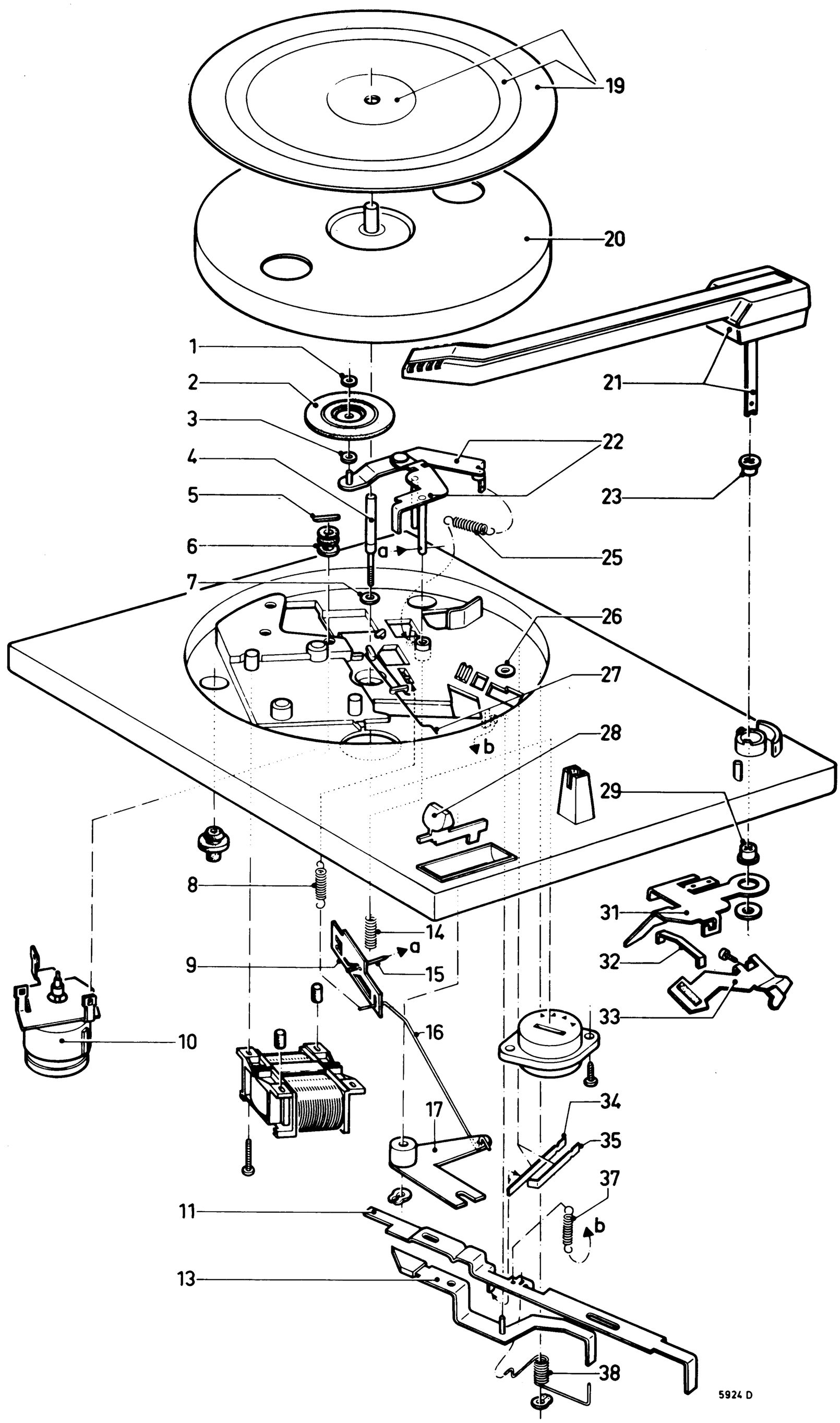

Fig. 4

1	4822 532 50827	10	4822 361 70264	20	4822 528 10249	29	4822 532 50834
2	4822 528 70235	11	4822 402 30048	21	4822 251 70147	31	4822 402 60498
3	4822 532 50296	13	4822 402 60448	22	4822 402 40028	32	4822 492 61623
4	4822 535 90757	14	4822 492 50916	23	4822 532 50834	33	4822 402 30051
5	4822 460 20078	15	4822 535 90951	25	4822 492 30867	34	4822 290 80226
6	4822 325 80123	16	4822 535 90973	26	4822 532 50827	35	4822 290 80225
7	4822 532 10561	17	4822 402 60497	27	4822 492 40408	37	4822 492 30869
8	4822 492 30868	19	4822 466 50084	28	4822 411 60397	38	4822 492 40612
9	4822 402 60296						