Colour Television

Chassis

L01.1E

AB

Service
Service
Service

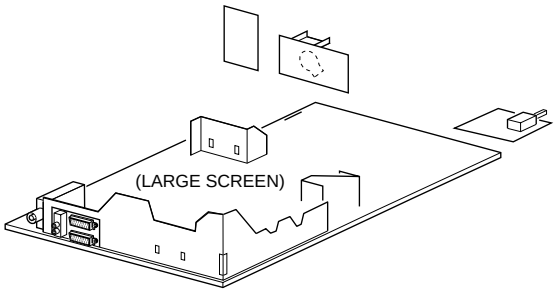

CL26532063_000.eps
140602

Service Manual

Contents **Page**

1. Technical Specifications, Connections and Chassis Overview 2
2. Safety & Maintenance Instructions, Warnings and Notes 5
3. Directions for Use 6
4. Mechanical Instructions 11
5. Service Modes, Error Codes and Faultfinding 13
6. *Block Diagram, Testpoints, I²C And Supply Voltage Overview*
   - Block Diagram 21
   - Testpoint Overview 22
   - I²C And Supply Voltage Overview 23
7. *Electrical Diagrams and PWB's*

		Diagram	*PWB*
Power Supply	(Diagram A1)	24	42-48
Diversity Tables A1		25	
Line Deflection	(Diagram A2)	26	42-48
Diversity Tables A2		27	
Frame Deflection	(Diagram A3)	29	42-48
Tuner IF	(Diagram A4)	30	42-48
Video IF and Sound IF	(Diagram A5)	31	42-48
Synchronization	(Diagram A6)	32	42-48
Control	(Diagram A7)	33	42-48
Audio Amplifier	(Diagram A8)	34	42-48
Diversity Tables A8		35	
NICAM (Stereo/SAP) Decoder	(Diagram A9)	36	42-48
Audio/Video Source Switching	(Diagram A10)	37	42-48
Front I/O + Control, Headphone	(Diagram A12)	38	42-48
Diversity Tables A12, A14		39	
Rear I/O SCART	(Diagram A14)	40	42-48
Tilt and Rotation	(Diagram A15)	41	42-48
CRT	(Diagram B1)	49	51
SCAVEM	(Diagram B2)	50	51
Side AV and Headphone	(Diagram C)	52	52
Side AV and Headphone	(Diagram E1)	53	53
Front Interface Panel	(Diagr. Q1)	54	54
Top Control (RF)	(Diagram T)	55	55
Top Control (FSQ)	(Diagram T1)	56	56

8. Alignments 57
9. Circuit Description 64
   - List of Abbreviations 73
10. Spare Parts List 75

©Copyright 2002 Philips Consumer Electronics B.V. Eindhoven, The Netherlands. All rights reserved. No part of this publication may be reproduced, stored in a retrieval system or transmitted, in any form or by any means, electronic, mechanical, photocopying, or otherwise without the prior permission of Philips.

Published by RB 0266 Service PaCE Printed in the Netherlands Subject to modification EN 3122 785 12860

PHILIPS

1. Technical Specifications, Connections and Chassis Overview

Note: Described specifications are valid for the *whole* product range.

1.1 Technical Specifications

1.1.1 Reception

Tuning system	:	PLL
Colour systems	:	PAL B/G, D/K, I
	:	SECAM B/G, L/L'
Sound systems	:	FM/AM-mono
	:	FM-stereo (2CS)
	:	NICAM
	:	FM radio (10.7 MHz)
A/V connections	:	PAL BG
	:	SECAM L/L'
	:	PAL 60 (playback only)
	:	NTSC 3.58 (playback only)
	:	NTSC 4.43 (playback only)
Channel selections	:	100 channels
	:	UVSH
IF frequency	:	38.9 MHz
Aerial input	:	75 Ω, Coax

1.1.2 Miscellaneous

Audio output (RMS)	:	2 x 5 W stereo
	:	2 x 10 W stereo
Mains voltage	:	220 - 240 V (± 10 %)
Mains frequency	:	50 / 60 Hz (± 5 %)
Ambient temperature	:	+ 5 to + 45 deg. C
Maximum humidity	:	90 % R.H.
Power consumption	:	58 W (21") to
	:	100 W (33")
Standby Power consumption	:	< 3 W

1.2 Connections

1.2.1 Side (or Front) Connections and Top (or Front) Control

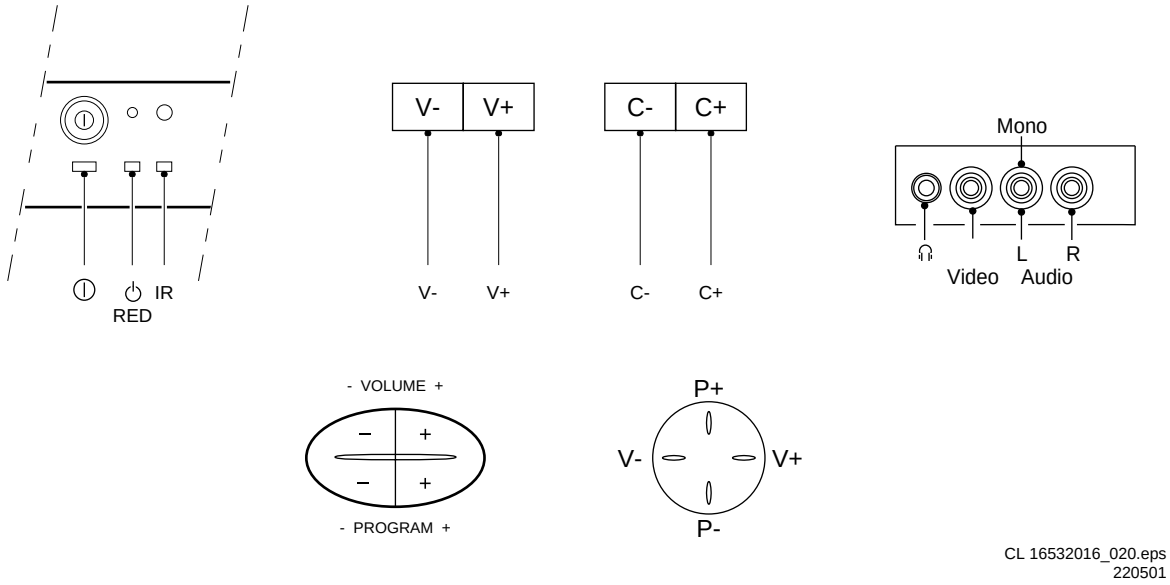

Figure 1-1

Audio / Video In

1	- Video	CVBS (1 Vpp / 75 Ω)	
2	- Audio	L (0.5 Vrms / 10 kΩ)	
3	- Audio	R (0.5 Vrms / 10 kΩ)	
4	- Headphone	3.5 mm (8 - 600 Ω / 4 mW)	

1.2.2 Rear Connections

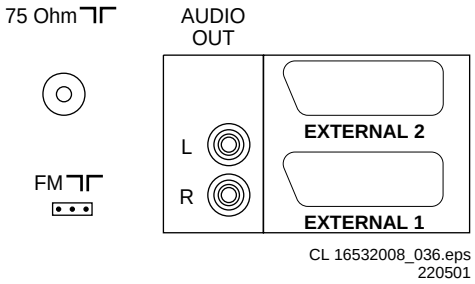

Figure 1-2 .eps

TV Aerial In

Aerial input : 75 Ω, Coax (IEC-type)

FM Radio In

Aerial input : via 'coax-to-3 pins' adapter
: 'cable' or 'wire' antenna

Audio In

1 - Audio	L (0.5 Vrms / 10 kΩ)	
2 - Audio	R (0.5 Vrms / 10 kΩ)	

External 1: RGB/YUV in + CVBS in/out

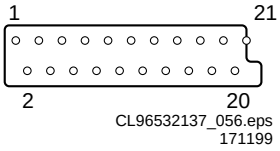

Figure 1-3

1 - Audio	R (0.5 Vrms / 1 kΩ)	
2 - Audio	R (0.5 Vrms / 10 kΩ)	
3 - Audio	L (0.5 Vrms / 1 kΩ)	
4 -	GND	
5 -	GND	
6 - Audio	L (0.5 Vrms / 10 kΩ)	
7 - Blue / U	(0.7 Vpp / 75 Ω)	
8 - CVBS-status	0 - 2.0 V: INT 4.5 - 7 V: EXT 16:9 9.5 - 12 V: EXT 4:3	
9 -	GND	
10 -		
11 - Green / Y	(0.7 Vpp / 75 Ω)	
12 -		
13 -	GND	
14 -	GND	
15 - Red / V	(0.7 Vpp / 75 Ω)	
16 - RGB-status	0 - 0.4 V: INT 1 - 3 V: EXT / 75 Ω	
17 -	GND	
18 -	GND	
19 - CVBS	(1 Vpp / 75 Ω)	
20 - CVBS	(1 Vpp / 75 Ω)	
21 - Earth	GND	

External 2: YC in + CVBS in/out

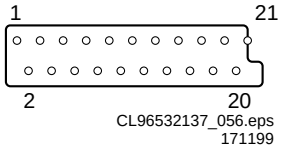

Figure 1-4

1 - Audio	R (0.5 Vrms / 1 kΩ)	
2 - Audio	R (0.5 Vrms / 10 kΩ)	
3 - Audio	L (0.5 Vrms / 1 kΩ)	
4 -	GND	
5 -	GND	
6 - Audio	L (0.5 Vrms / 10 kΩ)	
7 -		
8 - CVBS-status	0 - 2.0 V: INT 4.5 - 7 V: EXT 16:9 9.5 - 12 V: EXT 4:3	
9 -	GND	
10 -		
11 -		
12 -		
13 -	GND	
14 -	GND	
15 - C	(0.3 Vpp / 75 Ω)	
16 -		
17 -	GND	
18 -	GND	
19 - CVBS	(1 Vpp / 75 Ω)	
20 - Y / CVBS	(1 Vpp / 75 Ω)	
21 - Earth	GND	

1.3 Chassis Overview

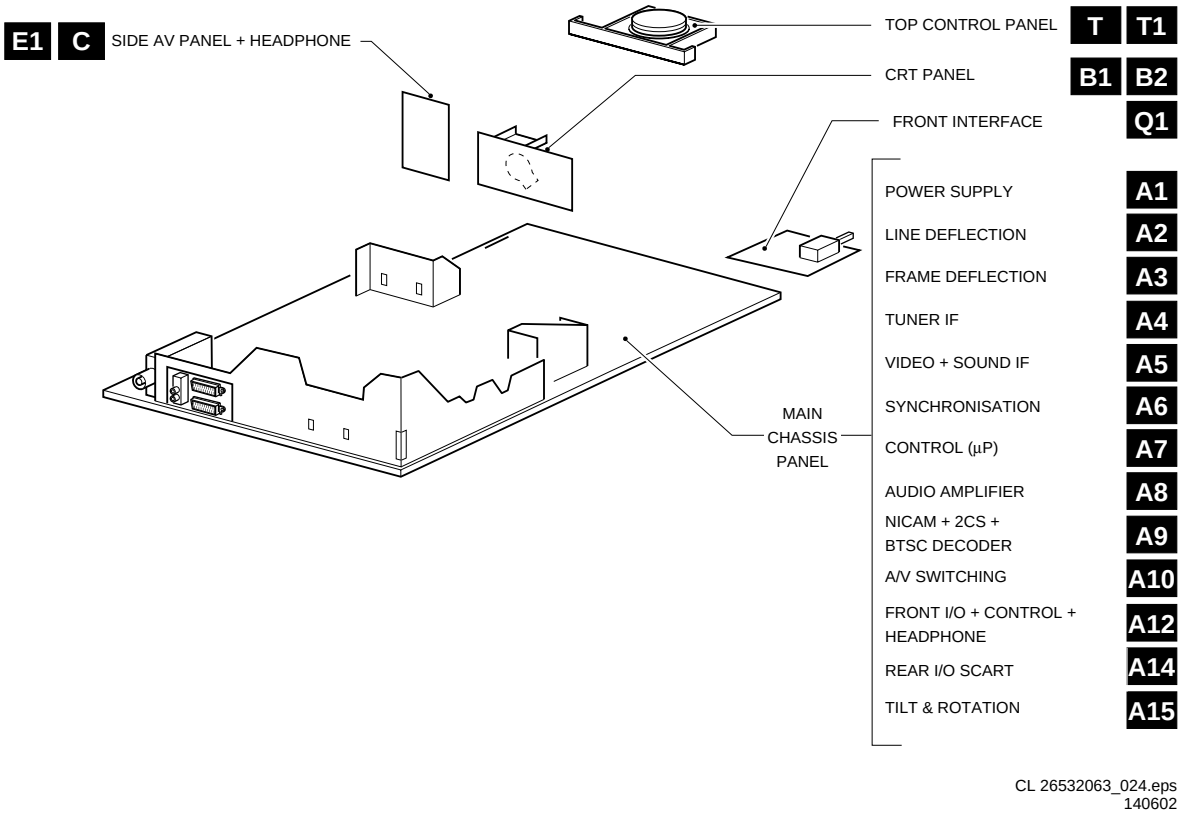

Figure 1-5

2. Safety & Maintenance Instructions, Warnings, and Notes

2.1 Safety Instructions For Repairs

Safety regulations require that during a repair:
- Due to the ‘hot’ parts of this chassis, the set must be connected to the AC power via an isolation transformer.
- Safety components, indicated by the symbol ▲, should be replaced by components identical to the original ones.
- When replacing the CRT, safety goggles must be worn.

Safety regulations require that after a repair, the set must be returned in its original condition. Pay particular attention to the following points:
- General repair instruction: as a strict precaution, we advise you to re-solder the solder connections through which the horizontal deflection current is flowing, in particular:
  - all pins of the line output transformer (LOT)
  - fly-back capacitor(s)
  - S-correction capacitor(s)
  - line output transistor
  - pins of the connector with wires to the deflection coil
  - other components through which the deflection current flows.

Note: This re-soldering is advised to prevent bad connections due to metal fatigue in solder connections and is therefore only necessary for television sets more than two years old.
- Route the wire trees and EHT cable correctly and secure them with the mounted cable clamps.
- Check the insulation of the AC power cord for external damage.
- Check the strain relief of the AC power cord for proper function, to prevent the cord from touching the CRT, hot components, or heat sinks.
- Check the electrical DC resistance between the AC plug and the secondary side (only for sets that have an isolated power supply). Do this as follows:
  1. Unplug the AC power cord and connect a wire between the two pins of the AC plug.
  2. Turn on the main power switch (keep the AC power cord unplugged!).
  3. Measure the resistance value between the pins of the AC plug and the metal shielding of the tuner or the aerial connection of the set. The reading should be between 4.5 MΩ and 12 MΩ.
  4. Switch the TV OFF and remove the wire between the two pins of the AC plug.
- Check the cabinet for defects, to prevent the possibility of the customer touching any internal parts.

2.2 Maintenance Instructions

It is recommended to have a maintenance inspection carried out by qualified service personnel. The interval depends on the usage conditions:
- When the set is used under normal circumstances, for example in a living room, the recommended interval is three to five years.
- When the set is used in an environment with higher dust, grease or moisture levels, for example in a kitchen, the recommended interval is one year.
- The maintenance inspection includes the following actions:
  1. Perform the 'general repair instruction' noted above.
  2. Clean the power supply and deflection circuitry on the chassis.
  3. Clean the picture tube panel and the neck of the picture tube.

2.3 Warnings

- In order to prevent damage to ICs and transistors, avoid all high voltage flashovers. In order to prevent damage to the picture tube, use the method shown in Fig. 2-1, to discharge the picture tube. Use a high voltage probe and a multi-meter (position VDC). Discharge until the meter reading is 0 V (after approx. 30 s).

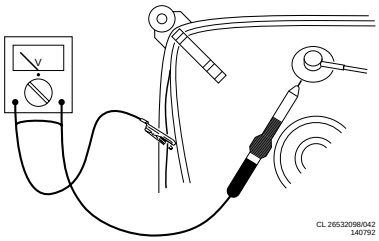

Figure 2-1

- All ICs and many other semiconductors are susceptible to electrostatic discharges (ESD) ⚠. Careless handling during repair can reduce life drastically. When repairing, make sure that you are connected with the same potential as the mass of the set by a wristband with resistance. Keep components and tools also at this potential. Available ESD protection equipment:
  - Complete kit ESD3 (small tablemat, wristband, connection box, extension cable, and ground cable) 4822 310 10671.
  - Wristband tester 4822 344 13999.
- Together with the deflection unit and any multi-pole unit, flat square picture tubes form an integrated unit. The deflection and the multi-pole units are set optimally at the factory. Adjustment of this unit during repair is therefore not recommended.
- Be careful during measurements in the high voltage section and on the picture tube.
- Never replace modules or other components while the unit is switched ON.
- When you align the set, use plastic rather than metal tools. This will prevent any short circuits and the danger of a circuit becoming unstable.

2.4 Notes

- Measure the voltages and waveforms with regard to the chassis (= tuner) ground (⏚), or hot ground (⏚), depending on the area of circuitry being tested.
- The voltages and waveforms shown in the diagrams are indicative. Measure them in the Service Default Mode (see chapter 5) with a color bar signal and stereo sound (L: 3 kHz, R: 1 kHz unless stated otherwise) and picture carrier at 475.25 MHz (PAL) or 61.25 MHz (NTSC, channel 3).
- Where necessary, measure the waveforms and voltages with (⊓) and without (⊓) aerial signal. Measure the voltages in the power supply section both in normal operation (⏻) and in standby (⏻). These values are indicated by means of the appropriate symbols.
- The picture tube panel has printed spark gaps. Each spark gap is connected between an electrode of the picture tube and the Aquadag coating.
- The semiconductors indicated in the circuit diagram and in the parts lists are completely interchangeable per position with the semiconductors in the unit, irrespective of the type indication on these semiconductors.

3. Directions for Use

Installing your television set

❶ Positioning the television set

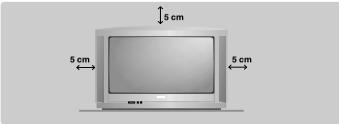

Place your TV on a solid, stable surface, leaving a space of at least 5 cm around the appliance. To avoid accidents, do not put anything on the set such as a cloth or cover, a container full of liquid (vase) or a heat source (lamp). The set must not be exposed to water.

❷ Connections

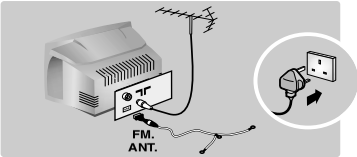

- Insert the aerial plug into the socket at the rear of the set.
- For the versions equipped with a radio: insert the radio aerial socket into the FM ANT socket using the adapter supplied.
  If you are using an indoor aerial, reception may be difficult in certain conditions. You can improve reception by rotating the aerial. If the reception remains poor, you will need to use an external aerial.
- Insert the mains plug into a wall socket (220-240 V / 50 Hz).

❸ Remote control

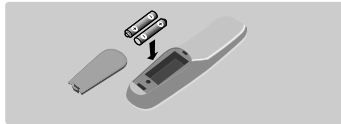

Insert the two R6-type batteries (supplied) making sure that they are the right way round. Check that the mode selector is set to TV. The batteries supplied with this appliance do not contain mercury or nickel cadmium. If you have access to a recycling facility, please do not discard your used batteries (if in doubt, consult your dealer). When the batteries are replaced, use the same type.

❹ Switching on

To switch on the set, press the on/off key. A red indicator comes on and the screen lights up. Go straight to the chapter Quick installation on page 4.
If the television remains in standby mode, press **P** ⊕ on the remote control.
The indicator will flash when you use the remote control.

The keys on the TV set

The television set has 4 keys which are located on the front or the top of the set depending on the model.

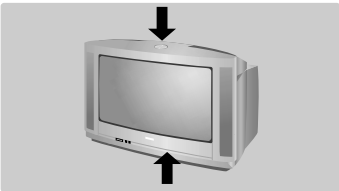

The VOLUME - + (- ◿ +) keys are used to adjust sound levels. The PROGRAM - + (- **P** +) keys are used to select the required programmes. To access the menus, simultaneously hold down the ◿ - and ◿ + keys. The PROGRAM - + keys may then be used to select an adjustment and the - ◿ + keys to make that adjustment. To exit from the menus, hold down the 2 ◿ - and ◿ + keys.
Note: when the **Child Lock** *function is activated, these keys are unavailable (refer to* **Features** *menu on page 7).*

Remote control keys

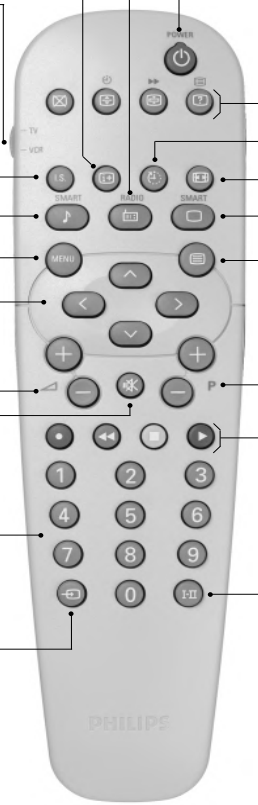

Screen information / permanent no.
To display / clear the program number, name (if it exists), time, audio mode and time remaining for the sleep feature. Press the key for 5 seconds to activate permanent display of the number. This key is also used to exit from the menu.

VCR key (p.11)

Incredible Surround
(only available on certain versions)
To activate / disable the Incredible Surround feature. In stereo, the speakers appear further apart. In mono, a pseudo-spatial stereo effect is obtained.

Pre-set sound
Used to access a series of stored settings: **Speech**, **Music**, **Theatre** and return to **Personal**.

Menu
To call up or exit the menus.

Cursor
These 4 keys are used to move around the menus or provide direct access to the different 16:9 formats (p.9).

Volume
To adjust the sound level

Mute
To mute or restore the sound.

Number keys
Direct access to the programmes. For a 2 digit program, enter the 2nd digit before the dash disappears.

Selection of EXT socket
Press several times to select EXT1, EXT2, S-VHS and AV.

Radio / TV mode
To switch the TV set to radio or TV mode (for versions equipped with radio).

Standby
Lets you place the TV set on standby. To turn on the TV, press **P** ⊖ ⊖, ⏻, 0 to 9 (or ▭).

Teletext keys (p. 8), VCR keys (p.11) and list of radio stations ☰ (p. 5)

Sleep
To select an automatic standby after a preset time (from 0 to 240 minutes).

16:9 modes (p. 9)

Pre-set image
Used to access a series of stored settings: **Bright**, **Natural**, **Soft**, **Multimedia** and return to **Personal**.

Teletext (p. 8)

Program selection
To access the next or previous programme. The number, (name) and sound mode are displayed for a few moments.
For some programs, the title of the program will be displayed at the bottom of the screen.

Teletext keys (p.8)
or VCR keys (p.11)

Sound mode
Used to force programmes in **Stereo** to **Mono** or, for bilingual programs, to choose between **Dual I** or **Dual II**. For TV sets equipped for Nicam reception, depending on the programmes, you can force the **Stereo Nicam** sound to **Mono** or select between **Nicam Dual I**, **Nicam Dual II** and **Mono**.
The **Mono** *indication is red when in forced position.*

Quick installation

The first time you switch on the television, a menu appears on the screen and the tuning starts automatically.

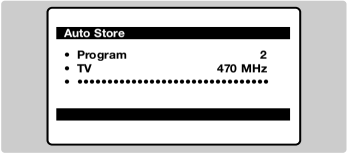

If the menu is not displayed, press and hold down the ◢- and ◢+ keys on the TV set for 5 seconds to start the tuning.

All the available TV programs and radio stations * will be stored. This operation takes a few minutes. The display shows the progress of the search and the number of programs found. At the end of the search, the menu disappears.

To exit or interrupt the search, press (MENU).

If no program is found, consult the possible solutions p. 12.

❶ If the transmitter or cable network sends the automatic sort signal, the programs will be numbered correctly. In this case, the installation is complete.

❷ If this is not the case, you need to use the **Sort** menu to number the programs correctly.

Some transmitters or cable networks broadcast their own sort parameters (region, language, etc.). In this case, indicate your choice using the (^)(v) keys and validate with (>).

* *Only on versions equipped with a radio.*

Program sort

❶ Press key (MENU). The **Main menu** is displayed on the screen.

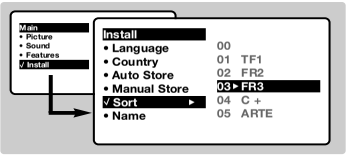

❷ With the cursor, select the **Install** menu followed by the **Sort** menu.

❸ Select the programme you want to move using the (^)(v) keys and press (>).

❹ Then use the (^)(v) keys to select the new number and validate with (<).

❺ Repeat steps ❸ and ❹ for each program you wish to renumber.

❻ To quit the menus, press (EXIT).

Program name

If required, you can give a name to the programmes and external connectors.

Note: on installation, the programs are named automatically when an identification signal is sent.

❶ Press the (MENU) key.

❷ With the cursor, select the **Install** menu, then **Name**

❸ Use the (^)(v) keys to select the programme to name or rename.

❹ Use the (<)(>) keys to move around the name display area (5 characters) and the (^)(v) keys to select the characters.

❺ When the name has been entered, use the (<) key to exit. The name is stored.

❻ Repeat steps ❸ to ❺ for each programme you wish to name.

❼ To quit the menus, press (EXIT).

Manual store

This menu is used to store the programmes one at a time.

❶ Press the (MENU) key.

❷ With the cursor, select the **Install** menu then **Manual store**:

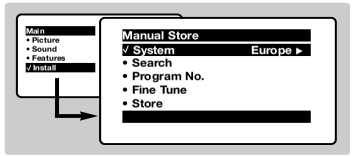

❸ **System:** select **Europe** (automatic detection*) or **Western Europe** (BG standard), **Eastern Europe** (DK standard), **United Kingdom** (I standard) or **France** (LL' standard).

* *Except for France (LL' standard), you must select choice* **France**.

❹ **Search:** press (>). The search starts. Once a programme is found, the scanning stops and its name is displayed (when available). Go to the next step. If you know the frequency of the required programme, this can be entered directly using the (0) to (9) keys.

If no picture is found, consult the possible solutions (p. 12).

❺ **Program No.:** enter the required number with the (<)(>) or (0) to (9) keys.

❻ **Fine Tune:** if the reception is not satisfactory, adjust using the (<)(>) keys.

❼ **Store:** press (>). The program is stored.

❽ Repeat steps ❹ to ❽ for each programme to store.

❾ To quit the menus, press (EXIT).

Other settings in the Install menu

❶ Press the (MENU) key and select the **Install** menu:

❷ **Language:** to change the display language for the menus.

❸ **Country:** to select your country (**GB** for Great Britain).

This setting is used for the search, automatic programme sort and teletext display. If your country does not appear in the list, select "…"

❹ Auto Store: to start automatic search for all programmes available in your region. If the transmitter or cable network sends the automatic sort signal, the programmes will be numbered correctly. If this is not the case, you need to use the Sort menu to renumber the programmes (see p. 4).

Some transmitters or cable networks broadcast their own sort parameters (region, language, etc.). In this case, indicate your choice using the (^)(v) keys and validate with (>). To quit or interrupt the search, press (MENU). If no picture is found, consult the possible solutions (p. 12).

❺ To quit the menus, press (EXIT).

Using the radio *(only available on certain versions)*

Choice of TV or radio mode

Press the (TV) key on the remote control to switch the TV set to either TV or radio mode. In radio mode, the number, station name (if available), frequency and sound mode are displayed on the screen. *To enter the station names, use the* **Name** *menu (p. 4)*

Program selection

Use the (0) (9) or (−) **P** (+) keys to select the FM stations (from 1 to 40).

List of radio stations

Press the (LIST) key to display the list of radio stations radio. Use the (^)(v) keys to change station and the (EXIT) key to exit.

Using the radio menus

Use the (MENU) key to access the specific radio setting.

Search for radio stations

If you used the quick installation, all available FM stations have already been stored. To start a new search, use the **Install : Auto Store** menu (for a complete search) or **Manual Store** (for a station by station search). The **Sort** and **Name menus** let you sort or name the radio stations. Operation of these menus is the same as for the TV menus.

Picture settings

1. Press (MENU) then (>). The **Picture** menu is displayed:

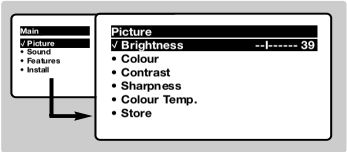

2. Use the (^)(v) keys to select a setting and the (<)(>) keys to adjust.
Note: during the picture adjustment, only the selected line remains displayed. Press (^)(v) to display the menu again.
3. Once the adjustments have been made, select **Store** and press (>) to store them. Press (EXIT) to exit.

Description of the adjustments:
- **Brightness:** this changes picture brilliance.
- **Colour:** this changes the intensity of the colour.
- **Contrast:** this changes the difference between the light and dark tones.
- **Sharpness:** this changes the picture definition.
- **Colour Temp.:** this changes the colour rendering: **Cold** (bluer), **Normal** (balanced) or **Warm** (redder).
- **Store:** to store the picture adjustments and settings (as well as the settings for **Contrast +** and **NR** in the **Features** menu).

Sound adjustments

1. Press (MENU), select Sound ((v)) and press (>). The **Sound** menu is displayed:

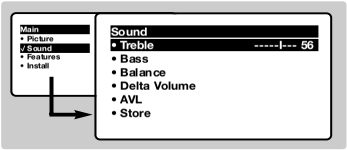

2. Use the (^)(v) keys to select a setting and the (<)(>) keys to adjust.
3. Once the adjustments have been made, select Store and press (>) to store these changes.
4. To quit the menus, press (EXIT).

Description of the settings:
- **Treble**: this alters the high frequency sounds.
- **Bass:** this alters the low frequency sounds.
- Balance: this balances the sound on the left and right speakers.
- **Delta Volume***: this is used to compensate any volume discrepancies between the different programs or EXT sockets. This setting is available for programs 0 to 40 and the EXT sockets.
- **AVL*** (Automatic Volume Leveller): this is used to limit increases in sound, especially on program change or advertising slots.
- **Store:** this is used to store the sound settings.

** Only available on certain versions.*

Feature settings

1. Press (MENU), select **Features** ((v)) and press (>). You can adjust:
2. **Timer**, **Child Lock** and **Parental Cont.**: see next page
3. **Contrast +:** automatic adjustment of the picture contrast which permanently sets the darkest part of the picture to black.
4. **NR:** attenuates picture noise (snow) in difficult reception conditions.

Caution: to store the **Contrast +** *and* **NR** *settings, use the* **Store** *choice in the* **Picture** *menu.*

5. **Rotation** (only available on very large screen sets): large screen sets are sensitive to terrestrial magnetic field variations. This setting is used to compensate for this by adjusting the picture rotation.
6. To quit the menus, press (EXIT).

Timer function *(only available on certain versions)*

This menu lets you use the TV set as an alarm.

1. Press the (MENU) key.
2. With the cursor, select the Options menu then **Timer** :
3. **Sleep:** to select an automatic standby period.

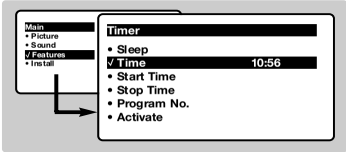

This setting is also available via the (⏲) key on the remote control.

4. **Time:** enter the current time.
Note: the time is updated automatically each time the TV set is switched on via the teletext information on program no. 1. If this program does not have teletext, the update will not take place.
5. **Start Time:** enter the start time.
6. **Stop Time:** enter the standby time.
7. **Program No.:** enter the number of the programme for the wake-up alarm. For models equipped with a radio, you can select an FM station by using the (<)(>) keys (the (0)(9) keys are only used to select TV programs).
8. **Activate:** the settings include:
   - **Once** for a single alarm,
   - **Daily** for each day,
   - **Stop** to cancel.
9. Press (⏻) to put the TV set in standby. It will automatically come on at the time programmed. If you leave the TV set on, it will just change programmes at the time entered (and will go to standby mode at the **Stop Time**).
By combining the **TV lock** *and* **Timer** *functions, you can restrict the period during which the TV set is used, for example by your children.*

TV lock *(only available on certain versions)*

You can block certain programs or inhibit use of the TV set completely by locking the keys.

Child lock

1. Press (MENU).
2. With the cursor, select the **Options** menu and position **Child Lock** to **On**.
3. Turn off the TV set and hide the remote control. The TV set cannot be used (except via the remote control).
4. To cancel: position **Child Lock** to **Off**.

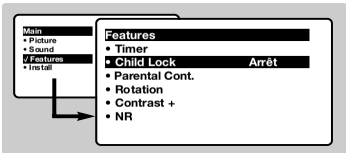

Parental control

1. Press the (MENU) key, select the **Features** menu then **Parental Cont.**:
2. You must enter your secret access code.

The first time you enter this, enter code 0711 twice and then enter your new code choice. The menu is displayed.

3. **Parental Cont.:** Use the (^)(v) keys to select the TV programme required and validate with (>). The (🔒) symbol will be displayed opposite the programmes or sockets that are locked. From now on, to view a locked programme, you must enter your secret code, otherwise the screen will stay blank.
The access to the **Install** *menu is also locked. Caution, for encrypted programs using an external decoder, you must lock the corresponding EXT socket.*
4. **Change code:** this allows you to enter a new 4 digit code. Confirm your new code by entering it a second time.
If you have forgotten your secret code, enter the universal code 0711 twice.
5. **Unlock all:** this is used to unlock all locked programmes.
6. **Lock All:** this is used to lock all the TV programmes and EXT connectors.
7. Press the (EXIT) key to quit.

Teletext

Teletext is an information system broadcast by certain channels which can be consulted like a newspaper. It also offers access to subtitles for viewers with hearing problems or who are not familiar with the transmission language (cable networks, satellite channels, etc.).

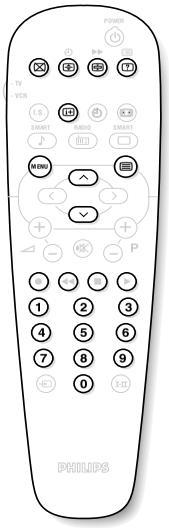

Press :	You will obtain:
Teletext call	This is used to call teletext, change to transparent mode and then exit. The summary appears with a list of items that can be accessed. Each item has a corresponding 3 digit page number. *If the channel selected does not broadcast teletext, the indication 100 will be displayed and the screen will remain blank (in this case, exit teletext and select another channel).*
0/9 **Selecting a page**	Enter the number of the page required using the 0 to 9 or − **P** + keys, ⌃⌄. Example: page 120, enter 1 2 0. The number is displayed top left, the counter turns and then the page is displayed. Repeat this operation to view another page. *If the counter continues to search, this means that the page is not transmitted. Select another number.*
Direct access to the items	Coloured areas are displayed at the bottom of the screen. The 4 coloured keys are used to access the items or corresponding pages. *The coloured areas flash when the item or the page is not yet available.*
Contents	This returns you to the contents page (usually page 100).
Temporary stop	This is used to temporarily disable or activate the teletext display.
Enlarge a page	This allows you to display the top or bottom part of the page and then return to normal size.
Stop sub-page acquisition	Certain pages contain sub-pages which are automatically displayed successively. This key is used to stop or resume sub-page acquisition. The indication appears top left.
Hidden information	To display or hide the concealed information (games solutions).
MENU **Favourite pages**	For teletext programs 0 to 40, you can store 4 favourite pages which can then be accessed directly using the coloured keys (red, green, yellow, blue). 1 Press the MENU key to change to favourite pages mode. 2 Display the teletext page that you want to store. 3 Press the coloured key of your choice for 3 seconds. The page is now stored. 4 Repeat the operation with the other coloured keys. 5 You can now consult teletext and your favourite pages will appear in colour at the bottom of the screen. To retrieve the standard items, press MENU. *To clear everything, press for 5 seconds.*

16:9 Formats

The pictures you receive may be transmitted in 16:9 format (wide screen) or 4:3 format (conventional screen). 4:3 pictures sometimes have a black band at the top and bottom of the screen (letterbox format). This function allows you to optimise the picture display on screen.

Automatic switching

This TV set is also equipped with automatic switching which will select the correct-screen format, provided the specific signals are transmitted with the programmes.
This automatic format can also be modified manually.

Using the different screen formats

Press the ⌄ key (or ⌃) to select the different modes:
4:3, Zoom 14:9, Zoom 16:9, Subtitle Zoom, Super Wide and **Widescreen**.
You can also access these settings with key .

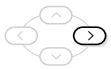

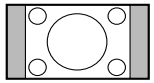

4:3 Mode
The picture is reproduced in 4:3 format and a black band is displayed on either side of the picture. The picture may be progressively enlarged using the ⌃⌄ keys.

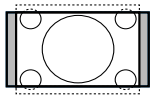

Zoom 14:9 Mode
The picture is enlarged to 14:9 format, a thin black band remains on both sides of the picture. The ⌃⌄ keys allow you to compress and move the image vertically to view the top or bottom of the picture (subtitles).

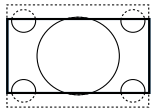

Zoom 16:9 Mode
The picture is enlarged to 16:9 format. This mode is recommended when displaying pictures which have black bands at the top and bottom (letterbox format).
Use the ⌃⌄ keys if you wish to compress and move the image vertically to view the top or bottom of the picture.

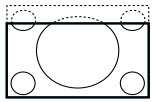

Subtitle Zoom Mode
This mode is used to display 4:3 pictures using the full surface of the screen leaving the sub-titles visible.
Use the ⌃⌄ keys to increase or decrease the compression at the bottom of the screen.

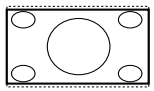

Super Wide Mode
This mode is used to display 4:3 pictures using the full surface of the screen by enlarging the sides of the picture. The ⌃⌄ keys allow you to scroll the image up or down the screen.

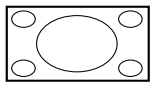

Widescreen Mode
This mode restores the correct proportions of pictures transmitted in 16:9 using full screen display.
Note: If you display a 4:3 picture in thid mode, it will be enlarged horizontally.

Connecting peripheral equipment

The television has 2 external sockets situated at the back of the set (EXT1 and EXT2).
The EXT1 socket has audio, CVBS/RGB inputs and audio, CVBS outputs.
The EXT2 socket has audio, CVBS/S-VHS inputs and audio, CVBS outputs.

Video recorder

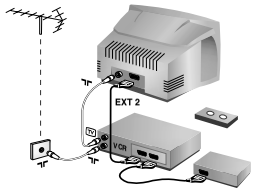

Carry out the connections shown opposite, using a good quality euroconnector cable.
If your video recorder does not have a euroconnector socket, the only connection possible is via the aerial cable. You will therefore need to tune in your video recorder's test signal and assign it programme number 0 (refer to manual store, p. 6).
To reproduce the video recorder picture, press 0.

Video recorder with decoder
Connect the decoder to the second euroconnector socket of the video recorder. You will then be able to record scrambled transmissions.

Other equipment

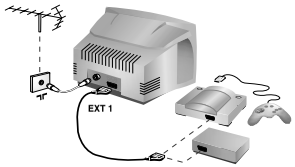

Satellite receiver, decoder, CDV, games, etc.
Carry out the connections shown opposite.
To optimise picture quality, connect the equipment which produces the RGB signals (digital decoder, games, etc.) to EXT1, and the equipment which produces the S-VHS signals (S-VHS and Hi-8 video recorders, certain DVD drives) to EXT2 and all other equipment to either EXT1 or EXT2.

Amplifier *(only available on certain versions)*

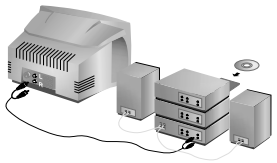

To connect to a hi-fi system, use an audio connection cable and connect the "L" and "R" outputs on the TV set to the "AUDIO IN" "L" and "R" input on your hi-fi amplifier.

To select connected equipment

Press the key to select **EXT1**, **EXT2**, **S-VHS2** (S-VHS signals from the EXT2 socket) and **AV** for connections on the front panel.
Most equipment (decoder, video recorder) carries out the switching itself.

Side connections

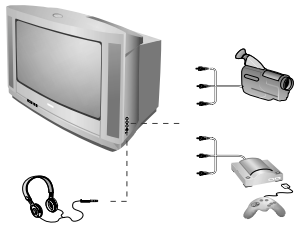

Make the connections as shown opposite.
With the key, select AV.
For a monophonic device, connect the audio signal to the AUDIO L input. Use the I-II key to reproduce the sound on the left and right speakers of the TV set.

Headphones
When headphones are connected, the sound on the TV set will be cut. The − **P** + keys are used to adjust the volume level.
The headphone impedance must be between 32 and 600 Ohms.

VCR key

The remote control lets you control the main functions of the VCR.

Press and hold down the VCR key located on the side of the remote control, then press one of the keys to access the VCR functions:

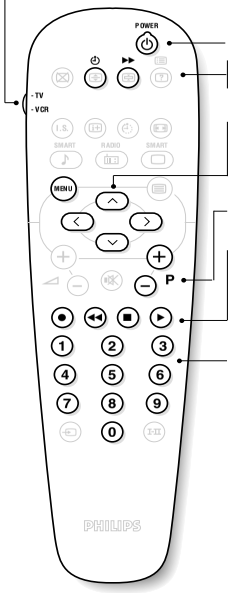

- standby
- programming*,
- fast forward,
- menu call *
- select *
- adjust *
- **P** − + program selection,
- ● record,
- ◀◀ fast rewind,
- ■ stop,
- ▶ play,
- 0 9 enter a number

* *Some functions are not available on all VCRs.*
The remote control is compatible with all VCRs using the RC5 standard.

4. Mechanical Instructions

Note: Figures below can deviate slightly from the actual situation, due to the different set executions.

4.1 Rear Cover Removal

1. Remove all (nine) fixation screws of the rear cover: two at the top, two at each side, two at the bottom and one at the SCART connectors.
2. Now pull the rear cover backward to remove it.

4.2 Service Position Main Panel

There are 2 configurations: one without and one with panel bracket. Both have a different service position.

Main panel **without** bracket.
1. Disconnect the strain relief of the Mains cord.
2. Remove the main panel, by pushing the two centre clips outward [1]. At the same time pull the panel away from the CRT [2].
3. Disconnect the degaussing coil by removing the cable from (red) connector 0201.
4. Turn the panel 90 degrees counter clockwise [3].
5. Flip the panel 90 degrees [4], with the components towards the CRT.
6. Turn the panel with the rear I/O towards the CRT [5].
7. Slide the metal heatsink (near the mains transformer 5520) underneath the right chassis bracket, so the panel is secured [6].

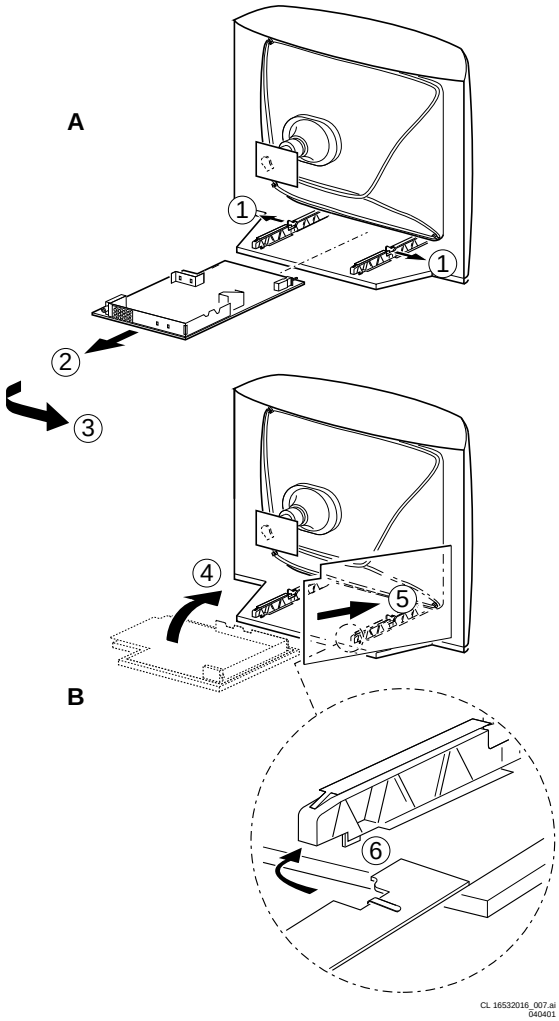

Figure 4-1

Main panel **with** bracket.
1. Disconnect the strain relief of the Mains cord.
2. Disconnect the degaussing coil by removing the cable from (red) connector 0201 [1].
3. Remove the panel bracket from the bottom tray, by pulling it backward [2].
4. Turn the chassis tray 90 degrees counter clockwise.
5. Move the panel somewhat to the left and flip it 90 degrees [3], with the components towards the CRT.
6. Turn the panel with the rear I/O towards the CRT.
7. Place the hook of the tray in the fixation hole of the cabinet bottom [4] and secure it.

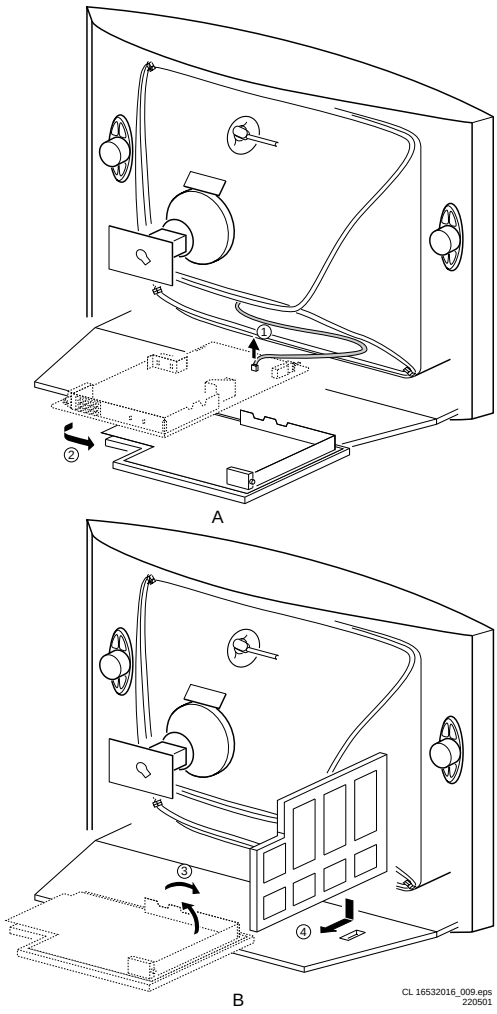

Figure 4-2

4.3 Side I/O Panel Removal (if present)

1. Remove the complete Side I/O assembly, after unscrewing the 2 fixation screws [1].
2. Release the two fixation clamps [2] and lift the board out of the bracket.

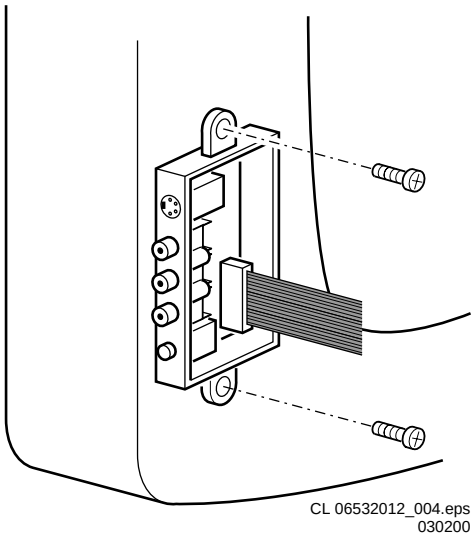

Figure 4-3

4.4 Rear Cover Mounting

Before you mount the rear cover:
1. Place the mains cord correctly in its guiding brackets (strain relief).
2. Place all cables in their original position.

5. Service Modes, Error Codes and Fault Finding

Index of this chapter:
1. Test points.
2. Service Modes.
3. Problems and Solving Tips (related to CSM).
4. ComPair.
5. Error Codes.
6. The Blinking LED Procedure.
7. Protections.
8. Repair Tips.

5.1 Test Points

The chassis is equipped with test points printed on the circuit board assemblies. These test points refer to the functional blocks:

TEST POINT OVERVIEW L01		
Test point	Circuit	Diagram
A1-A2-A3-…..	Audio processing	A8, A9 / A11
C1-C2-C3-…..	Control	A7
F1-F2-F3-…..	Frame drive	A3
I1-I2-I3-…..	Tuner & IF	A4
L1-L2-L3-….	Line drive	A2
P1-P2-P3-…..	Power supply	A1
S1-S2-S3-…..	Synchronisation	A6
V1-V2-V3-…..	Video processing	A5, B1

CL 16532008_044.eps
210501

Figure 5-1

The numbering is in a logical sequence for diagnostics. Always start diagnosing within a functional block in the sequence of the relevant test points for that block.
Perform measurements under the following conditions:
- Service Default Mode.
- Video: colour bar signal.
- Audio: 3 kHz left, 1 kHz right.

5.2 Service Modes

Service Default Mode (SDM) and Service Alignment Mode (SAM) offer several features for the service technician, while the Customer Service Menu (CSM) is used for communication between dealer and customer.

There is also the option of using ComPair, a hardware interface between a computer (see requirements) and the TV chassis. It offers the ability of structured trouble shooting, error code reading and software version readout for all L01 chassis.
Minimum requirements: a 486 processor, Windows 3.1 and a CD-ROM drive. A Pentium Processor and Windows 95/98 are also acceptable (see also paragraph 5.4).

SW cluster	SW name	UOC-type	Diversity	Remark
2EU0	L01ET0 x.y	TDA9555	West Europe, 1 page TXT	All Service Modes
2EU9	L01ET9 x.y	TDA9555	East Europe, 1 page TXT	All Service Modes
3EU1	L01EF1 x.y	TDA9565	West Europe, 10 page TXT	All Service Modes
3EU2	L01EF2 x.y	TDA9563	East Europe, 10 page TXT	All Service Modes
Abbreviations: E= Europe, F= Full TXT, M= mono, T= 1 page TXT				

CL 16532008_045.eps
210501

Figure 5-2

5.2.1 Service Default Mode (SDM)

Purpose
- To create a predefined setting to get the same measurement results as given in this manual.
- To override SW protections.
- To start the blinking LED procedure.

Specifications
- Tuning frequency:
  – 475.25 MHz for PAL/SECAM (Europe and AP-PAL).
  – 61.25 MHz (channel 3) for NTSC-sets (NAFTA, LATAM and AP-NTSC).
- Colour system:
  – PAL-M for LATAM BI/TRI/FOUR-NORMA.
  – SECAM L for France.
  – NTSC for NAFTA and AP-NTSC.
  – PAL-BG for Europe and AP-PAL.
- All picture settings at 50 % (brightness, colour contrast, hue).
- Bass, treble and balance at 50 %; volume at 25 %.
- All service-unfriendly modes (if present) are disabled, like:
  – (sleep) timer,
  – child/parental lock,
  – blue mute,
  – hotel/hospitality mode
  – auto switch-off (when no ‘IDENT’ video signal is received for 15 minutes),
  – skip / blank of non-favorite presets / channels,
  – auto store of personal presets,
  – auto user menu time-out.

How to enter SDM
Use one of the following methods:
- Use a standard customer RC-transmitter and key in the code ‘062596’ directly followed by the MENU button or
- Short wires 9631 and 9641 on the mono carrier (see Fig. 8-1) and apply Mains power. Then press the power button (remove the short after start-up). **Caution:** Entering SDM by shorten wires 9631 and 9641 will override the +8V-protection. Do this only for a short period. When doing this, the service-technician must know exactly what he is doing, as it could lead to damaging the set.
- Or via ComPair.

After entering SDM, the following screen is visible, with SDM at the upper right side for recognition.

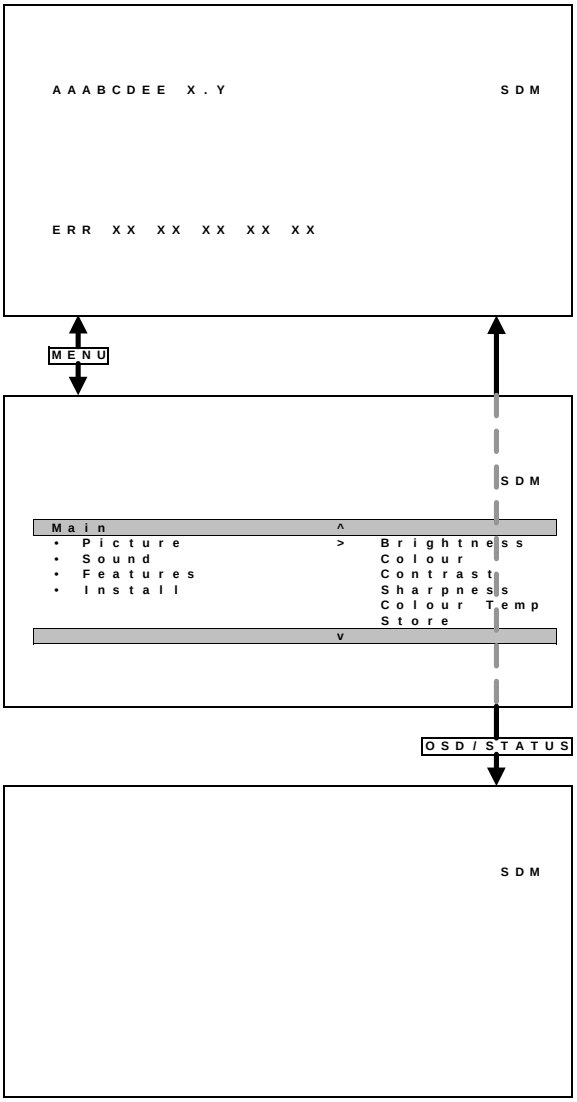

CL 16532020_060.pdf
220501

Figure 5-3

How to navigate
Use one of the following methods:
- When you press the MENU button on the remote control, the set will switch between the SDM and the normal user menu (with the SDM mode still active in the background). Return to the SDM screen with the OSD / STATUS button.
- When you press the OSD / STATUS button on the remote control, the menu will show or hide the error buffer. This feature is available to prevent interference during waveform measurements.
- On the TV, press and hold the 'VOLUME down' and press the 'CHANNEL down' for a few seconds, to switch from SDM to SAM and reverse.

How to exit
Switch the set to STANDBY by pressing the power button on the remote control transmitter (if you switch the set 'off' by removing the Mains power, the set will return in SDM when Mains power is re-applied). The error buffer is cleared.

5.2.2 Service Alignment Mode (SAM)

Purpose
- To perform alignments.
- To change option settings.
- To display / clear the error code buffer.

Specifications
- Operation hours counter.
- Software version.
- Option settings.
- Error buffer reading and erasing.
- Software alignments.

How to enter
Use one of the following methods:
- Use a standard customer RC-transmitter and key in the code ‘062596’ directly followed by the OSD / STATUS button or
- Via ComPair.

The following screen is visible, with SAM at the upper right side for recognition.

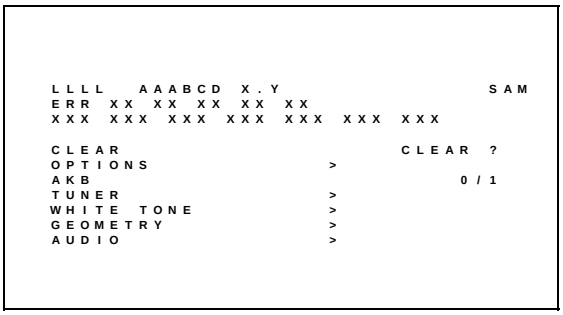

CL 16532020_061.eps
150401

Figure 5-4

1. **LLLL** This is the operation hours counter. It counts the normal operation hours, not the standby hours.
2. **AAABCD-X.Y** This is the software identification of the main micro controller:
   - A = the project name (L01).
   - B = the region: E = Europe, A = Asia Pacific, U = NAFTA, L = LATAM.
   - C = the software diversity: D= DVD, F= full TXT, M= mono, T= 1 page TXT.
   - D = the language cluster number.
   - X = the main software version number.
   - Y = the sub software version number.
3. **SAM** Indication of the actual mode.
4. **Error buffer** Five errors possible.
5. **Option bytes** Seven codes possible.
6. **Clear** Erase the contents of the error buffer. Select the CLEAR menu item and press the CURSOR RIGHT key. The content of the error buffer is cleared.
7. **Options** To set the Option Bytes. See chapter 8.3.1 for a detailed description.
8. **AKB** Disable (0) or enable (1) the ‘black current loop’ (AKB = Auto Kine Bias).
9. **Tuner** To align the Tuner. See chapter 8.3.2 for a detailed description.
10. **White Tone** To align the White Tone. See chapter 8.3.3 for a detailed description.
11. **Geometry** To align the Geometry. See chapter 8.3.4 for a detailed description.
12. **Audio** To align the Audio. See chapter 8.3.5 for a detailed description.

How to navigate
Use one of the following methods:
- In SAM, select menu items with the CURSOR UP/DOWN key on the remote control transmitter. The selected item will be highlighted. When not all menu items fit on the screen, move the CURSOR UP/DOWN key to display the next / previous menu items.
- With the CURSOR LEFT/RIGHT keys, it is possible to:
  – (De)activate the selected menu item.
  – Change the value of the selected menu item.

– Activate the selected submenu.
- When you press the MENU button twice, the set will switch to the normal user menus (with the SAM mode still active in the background). To return to the SAM menu press the OSD / STATUS button [i+].
- When you press the MENU key in a submenu, you will return to the previous menu.

How to exit
Switch the set to STANDBY by pressing the power button on the remote control (if you switch the set 'off' by removing the Mains power, the set will return in SAM when Mains power is re-applied). The error buffer is **not** cleared.

5.2.3 Customer Service Mode (CSM)

Purpose
When a customer is having problems with his TV-set, he can call his dealer. The service technician can than ask the customer to activate the CSM, in order to identify the status of the set. Now, the service technician can judge the severness of the complaint. In a lot of cases he can advise the customer how to solve the problem, or he can decide if it is necessary to visit the customer.
The CSM is a read only mode, therefore modifications in this mode are not possible.

How to enter
The CSM will be turned on after pressing the MUTE key on the remote control transmitter and any of the control buttons on the TV for at least 4 seconds **simultaneously**. This activation only works if there is no menu on the screen.

After switching ON the Customer Service Mode, the following screen will appear:

```
1   A A A B C D   X . Y                          C S M
2   C O D E S     X X   X X   X X   X X   X X
3   O P           X X X   X X X   X X X   X X X   X X X   X X X   X X X
4   D E T E C T E D   S Y S T E M   D E T E C T E D   S O U N D
5   N O T   T U N E D     S K I P P E D
6   T I M E R
7
8   C O   X X     C L   X X     B R   X X     H U   X X     S H   X X
9   V L   X X     B L   X X     A V L               D V   X X
10  T R   X X     B S   X X
```

CL 16532008_046.eps
220501

Figure 5-5

1. Software identification of the main micro controller (see paragraph 5.2.2 for an explanation).
2. Error code buffer (see paragraph 5.5 for more details). Displays the last seven errors of the error code buffer.
3. In this line, the Option Bytes (OB) are visible. Each Option Byte is displayed as a decimal number between 0 and 255. The set may not work correctly when an incorrect option code is set. See chapter 8.3.1 for more information on the option settings.
4. Indicates which color and sound system is installed for the selected pre-set.
5. Indicates if the set is not receiving an 'IDENT' signal on the selected source. It will display 'Not Tuned'.
6. Indicates if the sleep timer is enabled.
7. Indicates if the V-chip feature is enabled.
8. Value indicates parameter levels at CSM entry. CO= CONTRAST, CL= COLOR, BR= BRIGHTNESS, HU= HUE, SH= SHARPNESS
9. Value indicates parameter levels at CSM entry. VL= VOLUME LEVEL, BL= BALANCE LEVEL, AVL= AUTO VOLUME LEVEL LIMITER, DV= DELTA VOLUME
10. Value indicates parameter levels at CSM entry (only for stereo sets). TR= TREBLE, BS= BASS

How to exit
Use one of the following methods:
- After you press 'any' key of the remote control transmitter with exception of the CHANNEL and VOLUME keys.
- After you switch-off the TV set with the Mains power switch.

5.3 Problems and Solving Tips (Related To CSM)

5.3.1 Picture Problems

Note: Below described problems are all related to the TV settings. The procedures to change the value (or status) of the different settings are described.

No colours / noise in picture
Check CSM line 4. Wrong colour system installed. To change the setting:
1. Press the MENU button on the remote control.
2. Select the INSTALL sub menu.
3. Select the MANUAL STORE sub menu.
4. Select and change the SYSTEM setting until picture and sound are correct.
5. Select the STORE menu item.

Colours not correct / unstable picture
Check CSM line 4. Wrong colour system installed. To change the setting:
1. Press the MENU button on the remote control.
2. Select the INSTALL sub menu.
3. Select the MANUAL STORE sub menu.
4. Select and change the SYSTEM setting until picture and sound are correct.
5. Select the STORE menu item.

TV switches 'off' (or 'on') or changes the channel without any user action
(Sleep)timer switched the set 'off' or changed channel. To change the setting:
1. Press the MENU button on the remote control.
2. Select the FEATURES sub menu.
3. Select the TIMER sub menu.
4. Select and change the SLEEP or TIME setting.

Picture too dark or too bright
Increase / decrease the BRIGHTNESS and / or the CONTRAST value when:
- The picture improves after you have pressed the 'Smart Picture' button on the remote control.
- The picture improves after you have switched on the Customer Service Mode

The new 'Personal' preference value is automatically stored.

White line around picture elements and text
Decrease the SHARPNESS value when:
- The picture improves after you have pressed the 'Smart Picture' button on the remote control.
- The picture improves after you have switched on the Customer Service Mode

The new 'Personal' preference value is automatically stored.

Snowy picture
Check CSM line 5. If this line indicates 'Not Tuned', check the following:
- No or bad antenna signal. Connect a proper antenna signal.
- Antenna not connected. Connect the antenna.
- No channel / pre-set is stored at this program number. Go to the INSTALL menu and store a proper channel at this program number.

- The tuner is faulty (in this case the CODES line will contain error number 10). Check the tuner and replace / repair if necessary.

Snowy picture and/or unstable picture
- A scrambled or decoded signal is received.

Black and white picture
Increase the COLOR value when:
- The picture improves after you have pressed the 'Smart Picture' button on the remote control.
- The picture improves after you have switched on the Customer Service Mode

The new 'Personal' preference value is automatically stored.

Menu text not sharp enough
Decrease the CONTRAST value when:
- The picture improves after you have pressed the 'Smart Picture' button on the remote control.
- The picture improves after you have switched on the Customer Service Mode

The new 'Personal' preference value is automatically stored.

5.3.2 Sound Problems

No sound or sound too loud (after channel change / switching on)
Increase / decrease the VOLUME level when the volume is OK after you switched on the CSM. The new 'Personal' preference value is automatically stored.

5.4 ComPair

5.4.1 Introduction

ComPair (Computer Aided Repair) is a service tool for Philips Consumer Electronics products. ComPair is a further development on the European DST (service remote control), which allows faster and more accurate diagnostics. ComPair has three big advantages:
- ComPair helps you to quickly get an understanding on how to repair the chassis in a short time by guiding you systematically through the repair procedures.
- ComPair allows very detailed diagnostics (on I^2C level) and is therefore capable of accurately indicating problem areas. You do not have to know anything about I^2C commands yourself because ComPair takes care of this.
- ComPair speeds up the repair time since it can automatically communicate with the chassis (when the microprocessor is working) and all repair information is directly available. When ComPair is installed together with the SearchMan electronic manual of the defective chassis, schematics and PWBs are only a mouse click away.

5.4.2 Specifications

ComPair consists of a Windows based faultfinding program and an interface box between PC and the (defective) product. The ComPair interface box is connected to the PC via a serial or RS232 cable.
In case of the L01 chassis, the ComPair interface box and the TV communicate via a bi-directional service cable via the service connector (located on the Main panel, see also figure 8-1 suffix D).

The ComPair faultfinding program is able to determine the problem of the defective television. ComPair can gather diagnostic information in two ways:
- Automatic (by communication with the television): ComPair can automatically read out the contents of the entire error buffer. Diagnosis is done on I^2C level. ComPair can access the I^2C bus of the television. ComPair can send and receive I^2C commands to the micro controller of the television. In this way, it is possible for ComPair to communicate (read and write) to devices on the I^2C busses of the TV-set.
- Manually (by asking questions to you): Automatic diagnosis is only possible if the micro controller of the television is working correctly and only to a certain extend. When this is not the case, ComPair will guide you through the faultfinding tree by asking you questions (e.g. Does the screen gives a picture? Click on the correct answer: YES / NO) and showing you examples (e.g. Measure test-point I7 and click on the correct oscillogram you see on the oscilloscope). You can answer by clicking on a link (e.g. text or a waveform picture) that will bring you to the next step in the faultfinding process.

By a combination of automatic diagnostics and an interactive question / answer procedure, ComPair will enable you to find most problems in a fast and effective way.

Beside fault finding, ComPair provides some **additional features** like:
- Up- or downloading of pre-sets.
- Managing of pre-set lists.
- Emulation of the (European) Dealer Service Tool (DST).
- If both ComPair and SearchMan (Electronic Service Manual) are installed, all the schematics and the PWBs of the set are available by clicking on the appropriate hyperlink. **Example:** *Measure the DC-voltage on capacitor C2568 (Schematic/Panel) at the Monocarrier.* Click on the 'Panel' hyperlink to automatically show the PWB with a highlighted capacitor C2568. Click on the 'Schematic' hyperlink to automatically show the position of the highlighted capacitor.

5.4.3 How To Connect

1. First install the ComPair Browser software (see the Quick Reference Card for installation instructions).
2. Connect the RS232 interface cable between a free serial (COM) port of your PC and the PC connector (marked with 'PC') of the ComPair interface.
3. Connect the Mains power adapter to the supply connector (marked with 'POWER 9V DC') on the ComPair interface.
4. Switch the ComPair interface OFF.
5. Switch the television set OFF (remove the Mains power).
6. Connect the ComPair interface cable between the connector on the rear side of the ComPair interface (marked with 'I^2C') and the ComPair connector on the mono carrier (see figure 8-1 suffix D).
7. Plug the Mains power adapter in the Mains power outlet and switch on the interface. The green and red LEDs light up together. The red LED extinguishes after approx. 1 second while the green LED remains lit.
8. Start the ComPair program and read the 'introduction' chapter.

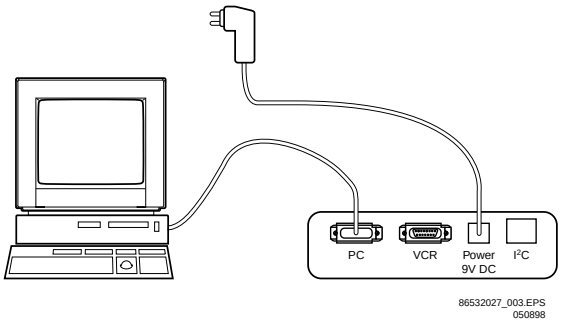

Figure 5-6

5.4.4 How To Order

ComPair order codes:

- Starter kit ComPair + SearchMan software + ComPair interface (excluding transformer): 4822 727 21629
- ComPair interface (excluding transformer): 4822 727 21631
- Starter kit ComPair software (registration version): 4822 727 21634
- Starter kit SearchMan software: 4822 727 21635
- ComPair CD (update): 4822 727 21637
- SearchMan CD (update): 4822 727 21638
- ComPair interface cable: 3122 785 90004

5.5 Error Buffer

The error code buffer contains all detected errors since the last time the buffer was erased. The buffer is written from left to right. When an error occurs that is not yet in the error code buffer, it is written at the left side and all other errors shift one position to the right.

5.5.1 How to Read the Error Buffer

Use one of the following methods:
- On screen via the SAM (only if you have a picture). Examples:
  - ERROR: **0 0 0 0 0** : No errors detected
  - ERROR: **6 0 0 0 0** : Error code 6 is the last and only detected error
  - ERROR: **9 6 0 0 0** : Error code 6 was first detected and error code 9 is the last detected (newest) error
- Via the blinking LED procedure (when you have no picture). See next paragraph.
- Via ComPair.

5.5.2 How to Clear the Error Buffer

The error code buffer is cleared in the following cases:
- By activation of the CLEAR command in the SAM menu:
- When you exit SDM / SAM with the STANDBY command on the remote control (when leaving SDM / SAM, by disconnecting the set from Mains power, the error buffer is not reset).
- When you transmit the command DIAGNOSE-99-OK with ComPair.
- If the content of the error buffer has not changed for 50 hours, it resets automatically.

5.5.3 Error Codes

In case of non-intermittent faults, clear the error buffer before you begin the repair. These to ensure that old error codes are no longer present.
If possible, check the entire contents of the error buffer. In some situations, an error code is only the result of another error code and not the actual cause (e.g., a fault in the protection detection circuitry can also lead to a protection).

ERROR CODE TABLE

Error	Device	Error description	Def. item	Diagram
0	Not applicable	No Error		
1	Not applicable	X-Ray/overvoltage protection (USA only)	2465, 7460	A2
2	Not applicable	Horizontal protection	7460, 7461, 7462, 7463, 6467	A2
	TDA8359/TDA9302	Vertical protection	7861, VlotAux+13V	A2, A3
3	Reserve			
4	MSP34X5 / TDA9853	MSP I²C identification error	7831 or 7861	A9 or A11
5	TDA95xx	POR 3V3 / +8V protection	7200, 7560, 7480	A5, A6, A7, A1, A2
6	I²C bus	General I²C bus error	7200, 3624, 3625	A7
7	AN7522/3	Power down (over current) protection	7901 / 7902, 7561	A8, A1
8	Not applicable	E/W protection (Large Screen)	7400, 3405, 3406, 3400	A2
9	M24C08	NVM I²C identification error	7602, 3611, 3603/04	A7
10	Tuner	Tuner I²C identification error	1000, 7482	A4, A2
11	TDA6107/8	Black current loop protection	7330, RGB amps, CRT	B1, B2
12	M65669	PIP I²C identification error	7803	P

CL 16532008_047.pdf
210501

Figure 5-7

5.6 The Blinking LED Procedure

Via this procedure, you can make the contents of the error buffer visible via the front LED. This is especially useful when there is no picture.

When the SDM is entered, the LED will blink the contents of the error-buffer.
Error-codes ≥ 10 are shown as follows:
– a long blink of 750 ms (which is an indication of the decimal digit),
– a pause of 1.5 s,
– n short blinks (n = 1 - 9),
– when all the error-codes are displayed, the sequence finishes with a LED blink of 3 s,
– the sequence starts again.

Example of error buffer: **12 9 6 0 0**
After entering SDM:
– 1 long blink of 750 ms followed by a pause of 1.5 s,
– 2 short blinks followed by a pause of 3 s,
– 9 short blinks followed by a pause of 3 s,
– 6 short blinks followed by a pause of 3 s,
– 1 long blink of 3 s to finish the sequence,
– the sequence starts again.

5.7 Protections

If a fault situation is detected an error code will be generated and if necessary, the set will be put in the protection mode. Blinking of the red LED at a frequency of 3 Hz indicates the protection mode. In some error cases, the microprocessor does not put the set in the protection mode. The error codes of the error buffer can be read via the service menu (SAM), the blinking LED procedure or via ComPair. The DST diagnose functionality will force the set into the Service-standby, which is similar to the usual standby mode, however the microprocessor has to remain in normal operation completely.

To get a quick diagnosis the chassis has three service modes implemented:
- The Customer Service Mode (CSM).
- The Service Default Mode (SDM). Start-up of the set in a predefined way.
- The Service Alignment Mode (SAM). Adjustment of the set via a menu and with the help of test patterns.

See for a detailed description Chapter 9 paragraphs Deflection and Power Supply.

5.8 Repair Tips

Below some failure symptoms are given, followed by a repair tip.
- **Set is dead and makes hiccuping sound**
  'MainSupply' is available. Hiccuping stops when de-soldering L5561, meaning that problem is in the 'MainSupply' load. No output voltages at LOT, no horizontal deflection. Reason: line transistor 7460 is defective.
- **Set is dead, and makes no sound**
  Check power supply IC7520. Result: voltage at pins 1, 3, 4, 5 and 6 are about 180 V and pin 8 is 0 V. The reason why the voltage on these pins is so high is because the output driver (pin 6) has an open load. That is why MOSFET TS7521 is not able to switch. Reason: feedback resistor 3523 is defective.
  Caution: be careful measuring on the gate of TS7521; circuitry is very high ohmic and can easily be damaged! (first connect ground to measuring equipment, than the gate).

- **Set is in hiccup mode and shuts down after 8 s.**
  Blinking LED (set in SDM mode) indicates error 5. As it is unlikely that μP 'POR' and '+8V protection' happen at the same time, measure the '+8V'. If this voltage is missing, check transistor TS7480.
- **Set is non-stop in hiccup mode**
  Set is in over current mode; check the secondary sensing (opto coupler 7515) and the 'MainSupply' voltage. Signal 'Stdby_con' must be logic low under normal operation conditions and goes to high (3.3 V) under standby and fault conditions.
- **Set turns on, but without picture and sound**
  The screen shows snow, but OSD and other menus are okay. Blinking LED procedure indicates error 10, so problem is expected in the tuner (pos. 1000). Check presence of supply voltages. As 'Vlotaux+5V' at pin 6 and 7 are okay, 'VT_supply' at pin 9 is missing. Conclusion: resistor 3460 or 3488 is defective.
- **Set turns on, but with a half screen at the bottom. Sound is okay**
  Blinking LED (set in SDM mode) indicates error 2. Check 'Vlotaux+13V' and '+50V'. If they are okay, problem is expected in the vertical amplifier IC7471. Measure with a scope the waveform on pin 17 of the UOC. Measure also at pin 1 of IC7471. If here the signal is missing, a defective resistor R3244 causes the problem.

Personal Notes:

Personal Notes:

6. Block Diagram, Testpoints, I²C and Supply Voltage Overview

Block Diagram

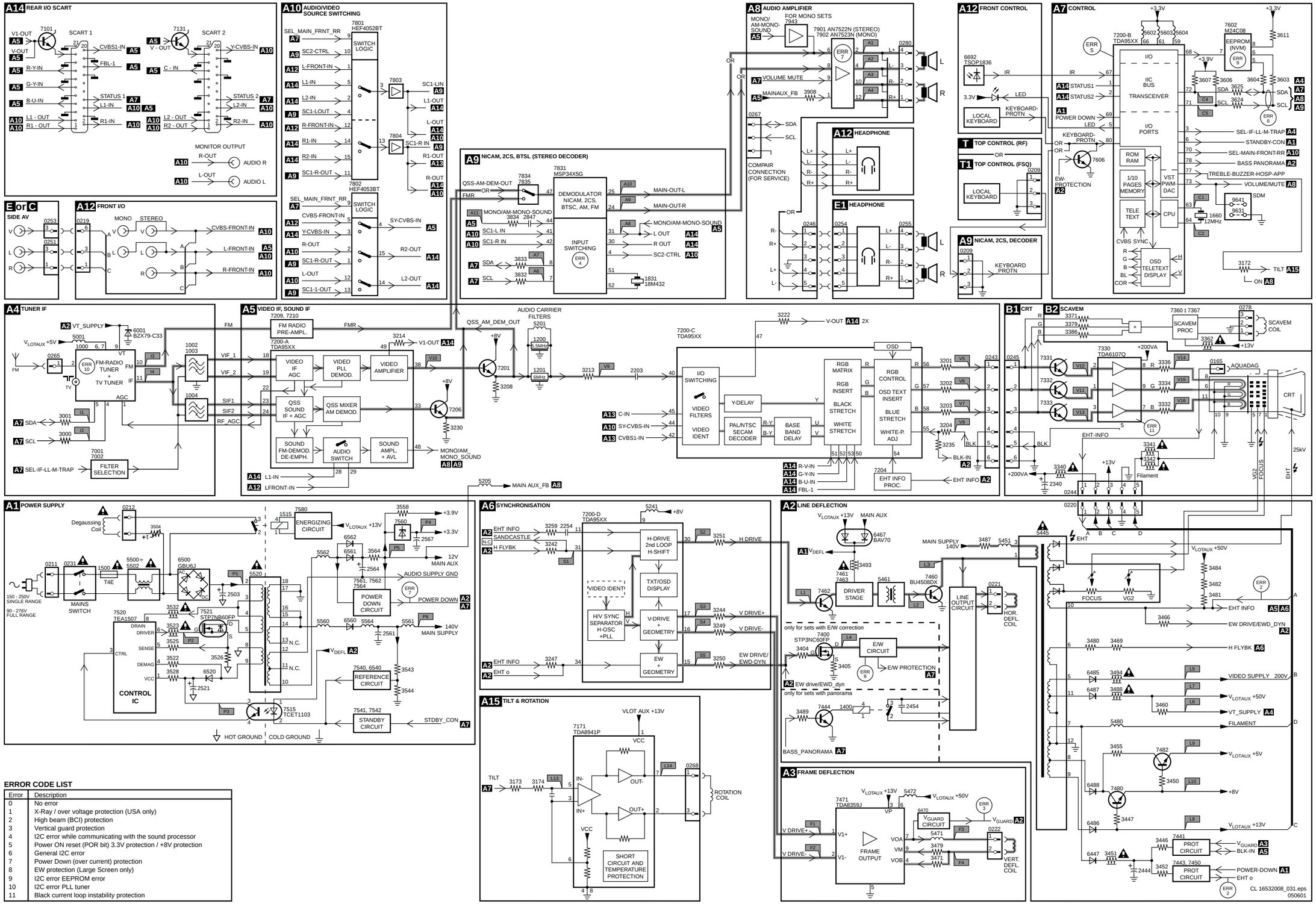

ERROR CODE LIST

Error	Description
0	No error
1	X-Ray / over voltage protection (USA only)
2	High beam (BCI) protection
3	Vertical guard protection
4	I2C error while communicating with the sound processor
5	Power ON reset (POR bit) 3.3V protection / +8V protection
6	General I2C error
7	Power Down (over current) protection
8	EW protection (Large Screen only)
9	I2C error EEPROM error
10	I2C error PLL tuner
11	Black current loop instability protection

Testpoint Overview

Main Panel Copper Track side

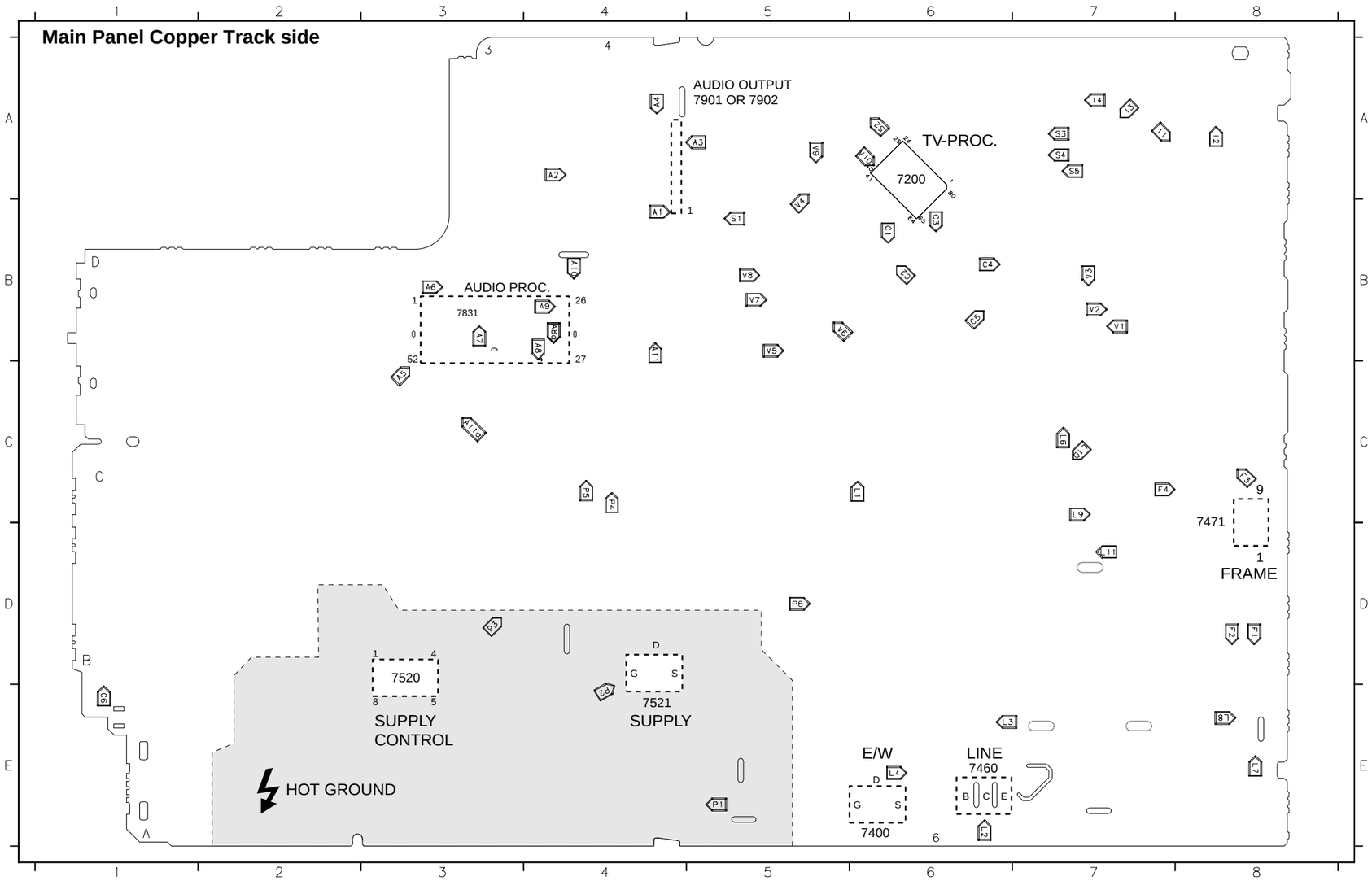

A1	B4
A2	A4
A3	A5
A4	A4
A5	C3
A6	B3
A7	B3
A8	B4
A8a	B4
A9	B4
A10	B4
A11	B4
A11a	C3
A12	C2
A13	C2
A14	C1
A15	B2
A16	B2
C1	B6
C2	B6
C3	B6
C4	B6
C5	B6
C6	E1
F1	D8
F2	D8
F3	C8
L1	C6
L2	E6
L3	E7
L4	E6
L6	C7
L7	E8
L8	E8
L9	C7
L11	D7
P1	E5
P2	E4
P3	D3
P4	C4
P5	C4
P6	D5
S1	B5
S2	A6
S3	A7
S4	A7
S5	A7
V1	B7
V2	B7
V3	B7
V4	B5
V5	B5
V6	B5
V7	B5
V8	B5
V9	A5

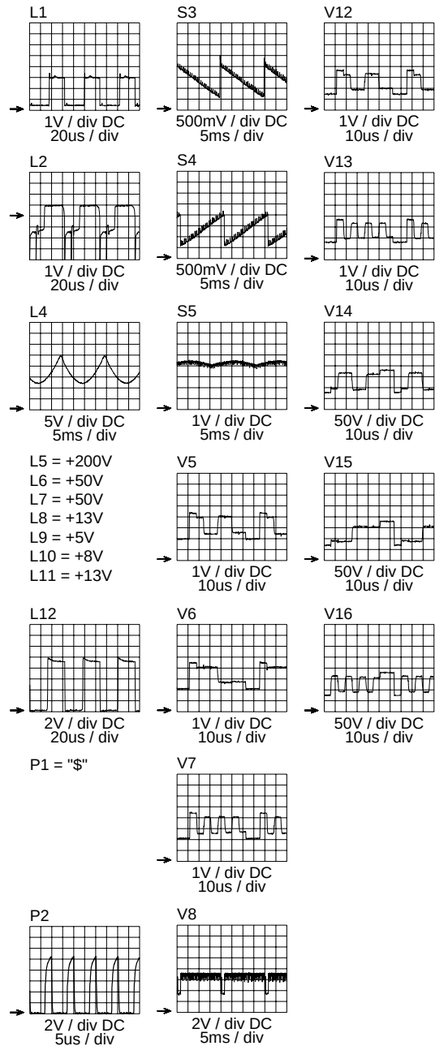

CRT Panel Copper Track Side

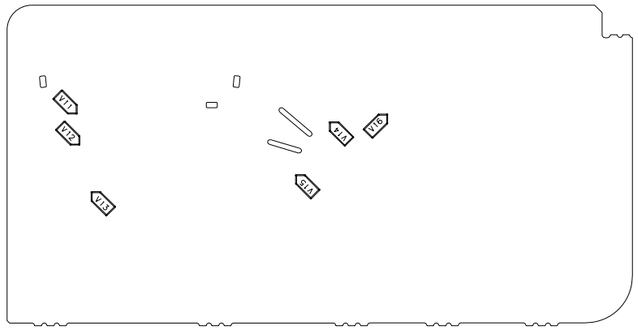

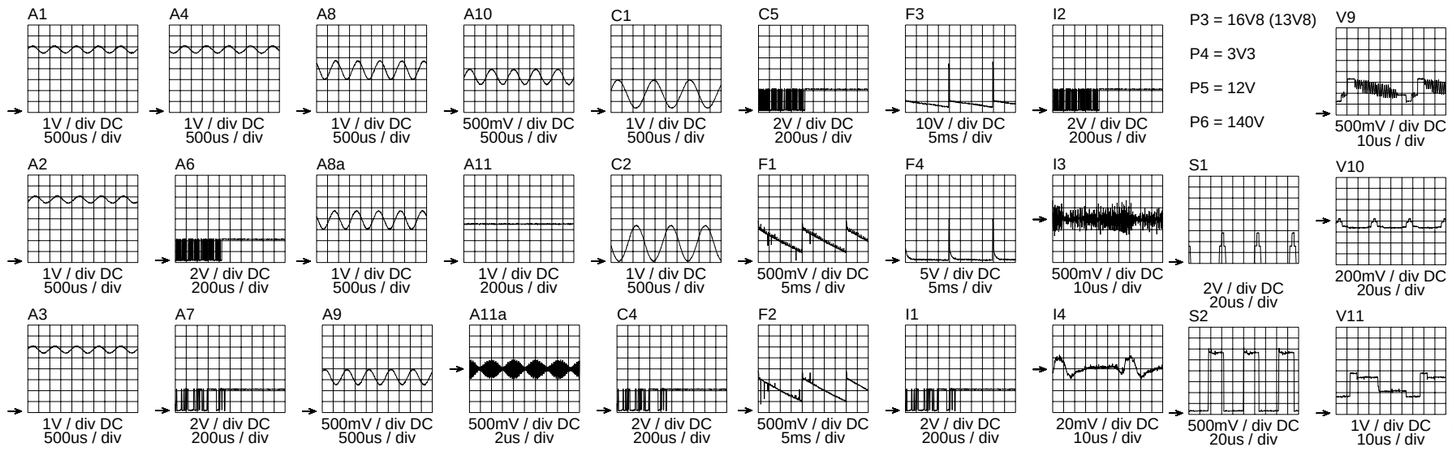

CL 16532008_030.eps
240801

I2C and Supply Voltage Diagram

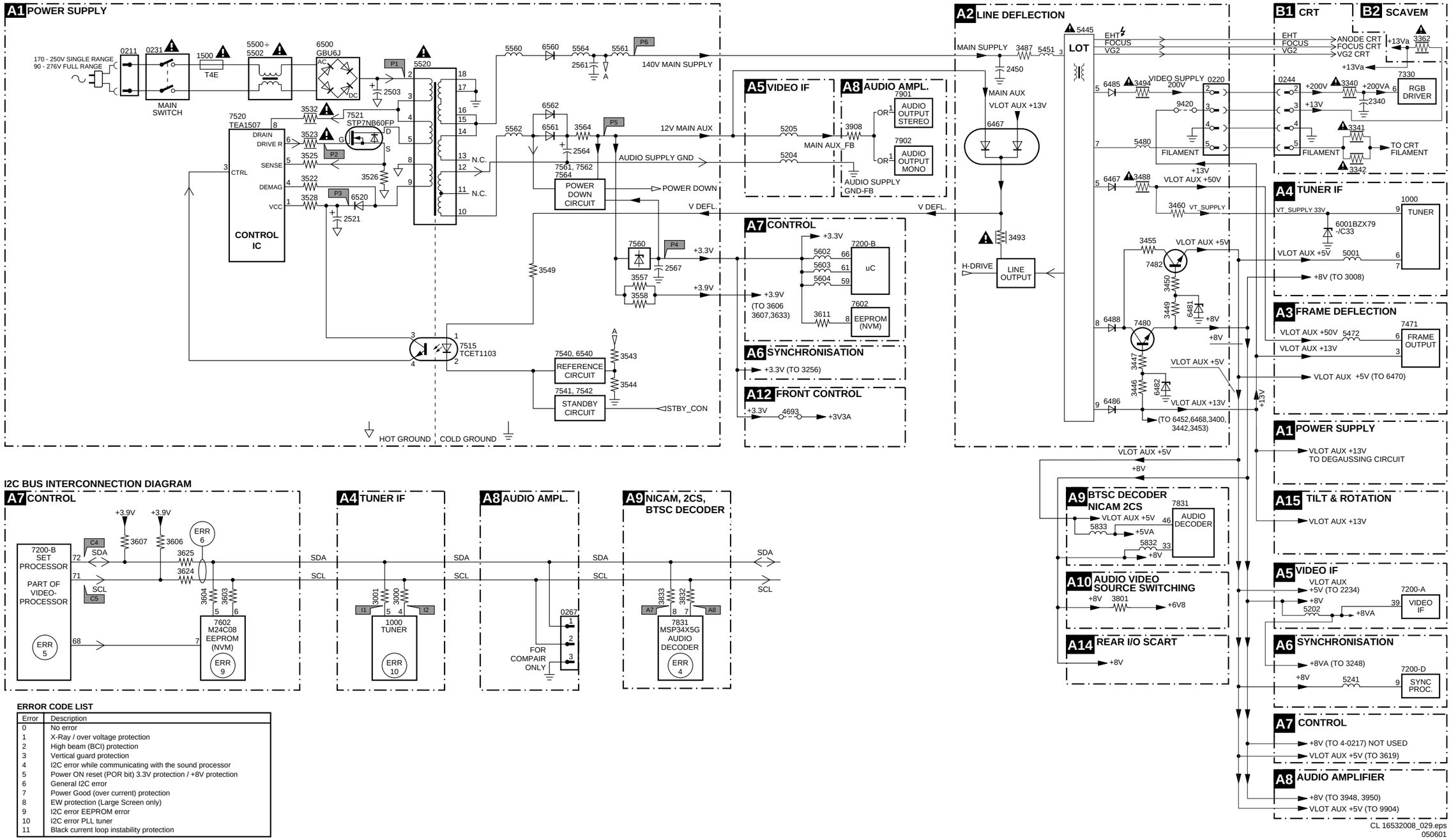

I2C BUS INTERCONNECTION DIAGRAM

ERROR CODE LIST

Error	Description
0	No error
1	X-Ray / over voltage protection
2	High beam (BCI) protection
3	Vertical guard protection
4	I2C error while communicating with the sound processor
5	Power ON reset (POR bit) 3.3V protection / +8V protection
6	General I2C error
7	Power Good (over current) protection
8	EW protection (Large Screen only)
9	I2C error EEPROM error
10	I2C error PLL tuner
11	Black current loop instability protection

7. Schematics and PWB's

Mono Carrier: Power supply

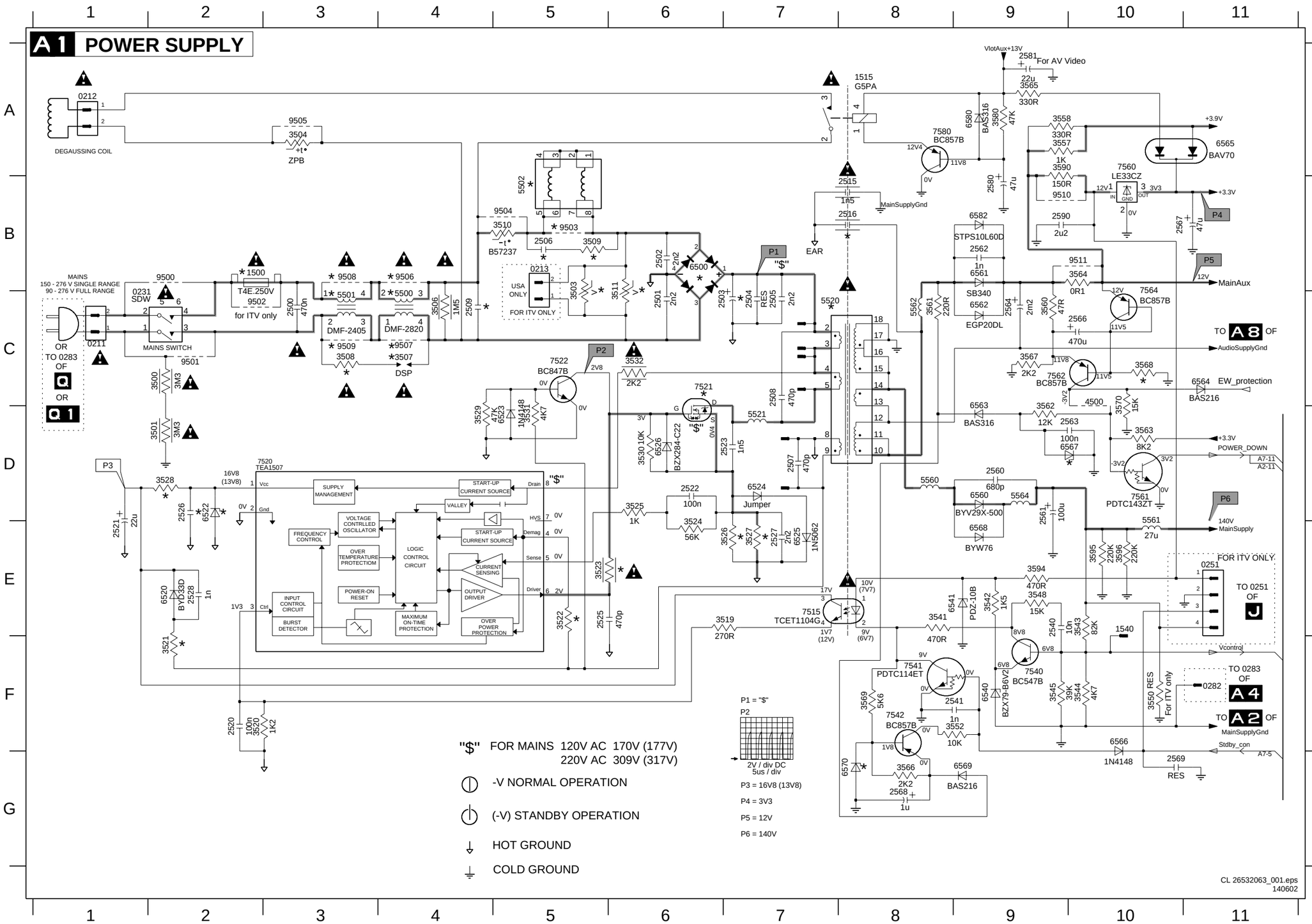

0211 C1
0212 A1
0213 B5
0231 C1
0251 E11
0282 F11
1500 B2
1515 A8
1540 E10
2500 C3
2501 C6
2502 B6
2503 C7
2504 C7
2505 C7
2506 B5
2507 D7
2508 C7
2509 C4
2515 B8
2516 B8
2520 F2
2521 E1
2522 D6
2523 D7
2525 E5
2526 D2
2527 E7
2528 E2
2540 E9
2541 F9
2560 D9
2561 D9
2562 B9
2563 D10
2564 C9
2566 C10
2567 B10
2568 G8
2569 G10
2580 B9
2581 A9
2590 B9
3500 C2
3501 D2
3503 B5
3504 A3
3506 C4
3507 C4
3508 C3
3509 B5
3510 B5
3511 B6
3519 E7
3520 F2
3521 F2
3522 E5
3523 E5
3524 E6
3525 D6
3526 E7
3527 E7
3528 D2
3529 D4
3530 D6
3531 D5
3532 C6
3541 E8
3542 E9
3543 E10
3544 F10
3545 F9
3548 E9
3550 F10
3552 F9
3557 A9
3558 A9
3560 C9
3561 C8
3562 D9
3563 D10
3564 B10
3565 A9
3566 G8
3567 C9
3568 C10
3569 F8
3570 C10
3580 A9
3590 A9
3594 E9
3595 E10
3596 E10
4500 C10
5500 C4
5501 C3
5502 A5
5520 C7
5521 D7
5560 D8
5561 E10
5562 C8
5564 D9
6500 B6
6520 E2
6522 D2
6523 D5
6524 D7
6525 E7
6526 D6
6540 F9
6541 E9
6560 D9
6561 B9
6562 C9
6563 D9
6564 C11
6565 A11
6566 E10
6567 D10
6568 B9
6569 B9
6570 G8
6580 B9
7515 A9
7520 A10
7521 C6
7522 C5
7540 F9
7541 F8
7542 F8
7560 A10
7561 D10
7562 C9
7564 C10
7580 B8
7580 A8
9500 B2
9501 C2
9502 C2
9503 B5
9504 B5
9505 A3
9506 B4
9507 C4
9508 B3
9509 C3
9510 B9
9511 B10

Mono Carrier: Power supply Diversity Tables

DIVERSITY TABLE FOR A 1 POWER SUPPLY

REGION	NA		LA
MAINS RANGE	LR		FR
AUDIO OUTPUT	2X5W		2X5W
SET	25V-36V	21RB	21RF
2503	200V 470U	220V 220U	400V 220U
2505	1KV 2N2	1KV 2N2	1KV 2N2
2506	-	-	-
2509	-	-	-
2515	250V 1N5	250V 1N5	250V 1N5
2516	-	-	-
2520	16V 100N	50V 10N	50V 10N
2526	-	16V 470N	16V 470N
2561	160V 100U	160V 47U	160V 47U
3503	-	-	-
3504	PTC 120V 3R	PTC 120V 3R	PTC 220V 9R
3509	-	-	-
3510	NTC B57237	-	NTC B57237
3511	-	-	-
3521	4R7	4R7	4R7
3522	330K	330K	330K
3523	RST FUSE 100R	RST FUSE 100R	RST FUSE 47R
3526	0R1	OR15	0R15
3627	0R33	-	-
3528	SMD JUMPER	10R	10R
3545	270K	270K	270K
3552	4K7	10K	10K
3557	1K	1K	1K
3561	100R	100R	100R
3562	12K	12K	12K
3563	5K6	8K2	8K2
3565	330R	330R	330R
3594	330R	220R	220R
3595	220K	220K	220K
3596	220K	220K	220K
4500	SMD JUMPER	-	-
4608	-	-	-
4609	-	-	-
5500	-	-	FIL MAINS 10MH
5501	FL MAINS 5MH	FIL MAINS 22MH	-
5502	-	-	-
5520	SS39009-04	SS35107-01	SS35107-01
6500	GBU4JL-7002	GBU4JL-7002	GBU4JL-7002
6522	-	BZX394-C20	BZX384-C20
6524	1N5062	1N5062	1N5062
6526	BZX394-C22	BZX384-C22	BZX384-C22
6541	BZX384-C10	BZX384-C9V1	BZX384-C9V1
6560	BYV29X-500(PHSE)	-	-
6566	1N4148	1N4148	1N4148
6567	-	-	BZX384-C4V7
6568	-	BYW76-RAS 15/10	BYW76-RAS 15/10
6570	BZX384-C6V8	BZX384-C6V8	BZX384-C6V2
6582	-	-	-
7521	STP8NC50FP	2SK2750	STP6NC80ZFP

ITEM	SNDAMP-1x1W-MN-GL	SNDAMP-2x1W-ST-EU/AP	SNDAMP-1x3W-NA/LA	SNDAMP-2x10W-ST-AP/EU	SNDAMP-2x3W-ST-NA	SNDAMP-2x5W-ST-EU/AP	SNDAMP-2x5W-ST-IND-MKII	SNDAMP-2x5W-ST-LA	SNDAMP-2x1W-NA	SNDAMP-2x5W-LA
2566	470uF/6V3	470uF/6V3	470uF/6V3	---	470uF/6V3	470uF/6V3	---	470uF/6V3	470uF/6V3	470uF/6V3
3560	47R	47R	47R	---	47R	47R	---	47R	47R	47R
3564	0R1	0R1	0R1	---	0R1	0R1	---	0R1	0R1	0R1
3567	3K3	1K8	3K3	---	1K8	1K8	---	1K8	3K3	1K8
3568	8K2	8K2	8K2	---	8K2	8K2	---	8K2	8K2	8K2
6561	---	DIO SBE340	---	---	---	DIO SBE340	DIO SBE340	DIO SDE340	---	DIO SBE340
6562	DIO EGP20	---	DIO EGP20	---	DIO EGP20	---	---	---	DIO EGP20	---
7562	BC857B	BC857B	BC857B	---	BC857B	BC857B	---	BC857B	BC857B	BC857B
7564	BC857B	BC857B	BC857B	---	BC857B	BC857B	---	BC857B	BC857B	BC857B

ITEM	SNDAMP-2x3W-LA	SNDAMP-2x1W-NA	SNDAMP-2x3W-ST-NA	SNDAMP-2x5W-ST-AP	SNDAMP-2x3W-ST-NDBX-NA/LA	SNDAMP-2x5W-ST+WOOFER-IND	SNDAMP-1x4W-MN-AP	SNDAMP-2x5W-VD-ST-EU	SNDAMP-2x10W-VD-ST-EU
2566	470uF/6V3	470uF/6V3	470uF/6V3	470uF/6V3	470uF/6V3	---	---	---	---
3560	47R	47R	47R	47R	47R	---	---	---	---
3564	0R1	0R1	0R1	0R1	0R1	---	0R1	0R1	---
3567	1K8	3K3	1K8	1K8	1K8	---	---	---	---
3568	8K2	8K2	8K2	8K2	8K2	---	---	---	---
6561	---	---	---	DIO SBE340	---	DIO SBE340	---	DIO SB340	---
6562	DIO EGP20	DIO EGP20	DIO EGP20	---	DIO EGP20	---	DIO EGP20	---	---
7562	BC857B	BC857B	BC857B	BC857B	BC857B	---	---	---	---
7564	BC857B	BC857B	BC857B	BC857B	BC857B	---	---	---	---

ITEM	KEYBOARD-IR+LED-GL	R+LED-EU/LA/AP	TC.PNL+FI. PNL-INTERF EU/NA/AP	L2K2.FRNT. 55K-NA	L2K2.FRNT. 55K-LA	L2K2.FRNT. NON-55K-NA	L2K2.FRNT NON-55K-LA	IR+LED.55K NA
3500	3M3	3M3	---	3M3	3M3	3M3	3M3	3M3
0239	3M3	3M3	---	3M3	3M3	3M3	3M3	3M3
9500	---	---	YES	YES	---	YES	---	YES
9501	---	---	YES	YES	---	YES	---	YES

ITEM	SINGLE SCART IN-DVD	DUAL SCART IN
2581	---	22uF
2132	---	390pF

CL 26532063_002.eps
210502

Mono Carrier: Line Deflection

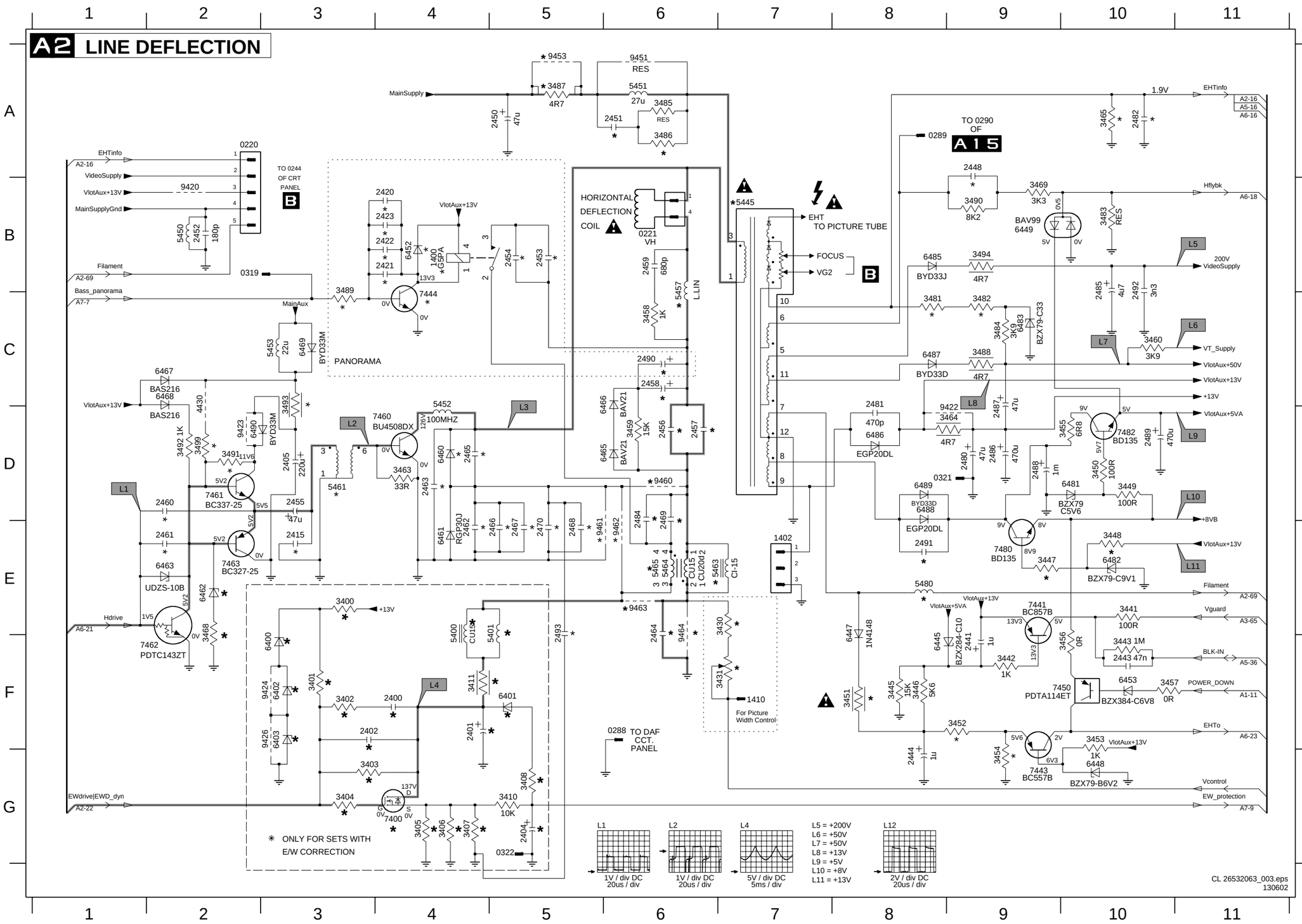

0220 A2
0221 B6
0288 F6
0289 A9
0319 B2
0321 D8
0322 G5
1400 B4
1402 E7
1410 F7
2400 F4
2401 F4
2402 F3
2404 G5
2405 D3
2415 E3
2420 B4
2421 B4
2422 B4
2423 B4
2441 F9
2443 F10
2444 G8
2448 A9
2450 A5
2451 A6
2452 B2
2453 B5
2454 B5
2455 D3
2456 D6
2457 D6
2458 C6
2459 B6
2460 D2
2461 E2
2462 E4
2463 D4
2464 E6
2465 D4
2466 E5
2467 E5
2468 E5
2469 D6
2470 E5
2480 D9
2481 D8
2482 A10
2484 D6
2485 B10
2486 D9
2487 D9
2488 D9
2489 D10
2490 C6
2491 E8
2492 B10
2493 E5
3400 E3
3401 F3
3402 F3
3403 G3
3404 G3
3405 G4
3406 G4
3407 G4
3408 G5
3410 G5
3411 F4
3430 E7
3431 F7
3441 E10
3442 F9
3443 F10
3445 F8
3446 F8
3447 E9
3448 E10
3449 D10
3450 D10
3451 F8
3452 F9
3453 F10
3454 G9
3455 D10
3456 F10
3457 F10
3458 C6
3459 D6
3460 C10
3463 D4
3464 D9
3465 A10
3468 E2
3469 B9
3481 C8
3482 C9
3483 B10
3484 C9
3485 A6
3486 A6
3487 A5
3488 C9
3489 B9
3490 B9
3491 D2
3492 D2
3493 C3
3494 B9
3499 D2
4430 C2
5400 E4
5401 E5
5445 B7
5450 B2
5451 A6
5452 D4
5453 C3
5457 B6
5461 D3
5463 E7
5464 E6
5465 E6
5480 E8
6400 F3
6401 F5
6402 F3
6403 F3
6445 F8
6447 E8
6448 G10
6449 B9
6452 F4
6453 F10
6460 D4
6461 E4
6462 E2
6463 E2
6465 D6
6466 C6
6467 C2
6468 C2
6469 C3
6481 D10
6482 E10
6483 C9
6485 B8
6486 D8
6487 C8
6488 D8
6489 D8
6490 D2
7400 G4
7441 E9
7443 G9
7444 C4
7450 F10
7460 D3
7461 D2
7462 F1
7463 E2
7480 E9
7482 D10
9420 B2
9422 D9
9423 D2
9424 F3
9426 F3
9451 A6
9453 A5
9460 D6
9461 E5
9462 E6
9463 E6
9464 E6

Mono Carrier: Line Deflection Diversity Tables

DIVERSITY TABLE FOR A2 LINE DEFLECTION

REGION	LATAM		NAFTA	
TUBE	PHILIPS	SMGK	SMGK	SMGK
EW/NON EW	NOEW	NO EW	NO EW	EW
TYPE OF TUBE	21RF	21RF	21RF	27RF (PIP)
ITEM				
2401	-	-	-	2U2
2402	-	-	-	470P
2404	-	-	-	47U
2405	220U-16V	220U-16V	220u-16v	220U-25V
2451	-	-	-	22N
2457	270N	270N	270N	360N
2462	-	-	-	-
2463	390P	680P	390P	820P
2464	-	-	-	2U2
2465	9N1	9N1	9N1	12N
2466	-	-	-	-
2467	15N	68N	15N	15N
2468	33N	33N	33N	15N
2482	33N	68N	33N	180N
3400	-	-	-	330R
3401	-	-	-	220K
3403	-	-	-	82K
3404	-	-	-	1K
3405	-	-	-	4R7
3406	-	-	-	4R7
3408	-	-	-	100R
3410	-	-	-	10K
3411	-	-	-	4R7
3447	180R	180R	180R	56R
3448	820R	820R	820R	470R
3451	10R	10R	10R	3R9
3452	47K	47K	5K1	5K1
3454	15K	15K	2K	2K
3456	SM JUMPER	SM JUMPER	SM JUMPER	SM JUMPER
3457	SM JUMPER	SM JUMPER	SM JUMPER	SM JUMPER
3468	-	-	-	100R
3481	18K	18K	18K	12K
3482	12K	8K2	12K	10K
3484	16	29	24	34
3486	-	-	-	22R
3491	SM 10K	SM 10K	24	SM 10K
3492	SM 820R	SM 1K	SM 820R	SM 1K
3493	6R8	6R8	6R8	6R8
3499	-	-	-	-
4401	-	-	-	SM JUMPER
4402	-	-	-	SM JUMPER
4430	-	-	-	-
5401	-	-	-	1000U
5445	2519	2519	2519	21421
5451	-	-	-	22U
5453	22U	22U	22U	22U
5457	00425	00425	00425	53201
5461	SC10015-00 B	SC10015-00 B	SC10015-00 B	SC10015-00 B
5463	-	-	-	CHOKE
5480	LAL04A 18U	LAL04A 22U	LAL04A 18U	LAL04A 33U
6400	-	-	-	1K
6401	-	-	-	BZX79-C47
6453	BZX384-C5V6	BZX384-C5V6	BZX384-C5V6	BZX384-C6V8
6460	BY228/24	BY228/24	BY228/24	BY228/24
6462	-	-	-	BZX79-C9V1
6463	BZX384-C9V1	BZX384-C8V2	BZX384-C9V1	BZX384-C10V
6467	-	-	-	-
6469	-	-	-	-
7400	-	-	-	STP3NC60FP
7450	PDTA114ET	PDTA114ET	PDTA114ET	PDTA114ET
7606	-	-	-	PDTC143ZT
9414	-	-	-	YES
9424	--	-	-	YES
9426	-	-	-	YES
9451	YES	YES	YES	-
9463	-	-	-	YES
9646	-	-	-	YES
9655	-	-	-	YES
9656	-	-	-	YES
9685	-	-	-	YES
9921	-	-	-	YES

LATAM	L2K2														
REGION	EU					AP				AP/CH		IN			CH
TUBE	PHCO		LG.PH			SMGK		LGPD	LG.PH	SMGK		SMGK	LG.PH		LG.PH
ITEM	28WR	32WR	21RF	29RF	24WR	29RF	29RF-2x10W	21RF-2x10W	21RF-2x5W	29RF	21RF-2x10W	21RF-2x5W	29RF-2x5W		29FL-2x10W
5464	C946-01	C946-01	---	---	C946-01	---	---	---	---	---	---	---	---		---
5480	LAL04 39U	LAL04 39U	LAL04 22U	SPT0508 18U	LAL04 18U	LAL04 22U	LAL04 33U	LAL04 27U	LAL04 27U	LAL04 18U	LAL04 27U	LAL04 27U	LAL04 27U		LAL04 27U
6171	BYD 33D	---	---	---	BYD 33D	---	---	---	---	---	---	---	---		---
6401	BZX79-C68	BZX79-C68	BZX79-C47	BZX79-C47	BZX79-C68	BZX79-C47	BZX79-C47	BZX79-C47	BZX79-C47	BZX79-C47	BZX79-C47	BZX79-C47	BZX79-C47		BZX79-C47
6452	BAS 316	BAS 316	---	---	BAS 316	---	---	---	---	---	---	---	---		---
6460	DG3-7005L	DG3-7005L	BY228/24	BY228/24	BY228/24	BY228/24	BY228/24	BY228/24	BY228/24	BY228/24	BY228/24	BY228/24	BY228/24		BY228/24
6462	BZX78-C12	BZX78-C12	---	---	BZX78-C12	BZX79-C10	---	---	---	---	---	---	---		---
6463	---	---	BZX384-C12	BZX384-C10	---	---	BZX384-C12	BZX384-C12	BZX384-C10	BZX384-C10	BZX384-C12	BZX384-C8V2	BZX384-C10		BZX384-C12
6464	---	---	---	---	---	---	---	---	---	BAS 316	---	---	BAS 316		BAS 316
6467	---	---	---	---	---	BAS 316	---	---	---	---	---	---	---		---
6469	BYD 33J	BYD 33J	---	---	BYD 33D	BYD 33J	BYD 33J	BYD 33J	---	BYD 33J	BYD 33J	---	---		BYD 33J
6490	BYD 33J	BYD 33J	---	---	BYD 33D	---	BYD 33J	BYD 33J	---	BYD 33J	BYD 33J	---	---		BYD 33J
7444	BC547B	BC547B	---	---	BC547B	---	---	---	---	---	---	---	---		---
9423	---	---	JUMPER	JUMPER	---	JUMPER	---	---	JUMPER	---	---	JUMPER	JUMPER		---
9451	---	---	---	---	---	---	---	JUMPER	JUMPER	JUMPER	JUMPER	JUMPER	JUMPER		JUMPER
9460	---	---	JUMPER	JUMPER	---	JUMPER	JUMPER	JUMPER	JUMPER	JUMPER	JUMPER	JUMPER	JUMPER		JUMPER
9462	JUMPER	JUMPER	---	---	JUMPER	---	---	---	---	---	---	---	---		---
9463	---	---	JUMPER	JUMPER	---	JUMPER	JUMPER	JUMPER	JUMPER	JUMPER	JUMPER	JUMPER	JUMPER		JUMPER
9464	JUMPER	JUMPER	---	---	JUMPER	---	---	---	---	---	---	---	---		---
9635	JUMPER	JUMPER	---	---	JUMPER	---	---	---	---	---	---	---	---		---
9636	JUMPER	JUMPER	---	---	JUMPER	---	---	---	---	---	---	---	---		---
9921	JUMPER	JUMPER	JUMPER	JUMPER	JUMPER	JUMPER	JUMPER	---	---	---	---	---	---		---

CL 26532063_005.eps
210502

Mono Carrier: Line Deflection Diversity Tables

DIVERSITY TABLE FOR A2 LINE DEFLECTION

LATAM	L2K2													
REGION	EU							AP		AP/CH		IN		CH
TUBE	PHCO		LG.PH			SMGK		LGPD	LG.PH	SMGK		SMGK	LG.PH	LG.PH
ITEM	28WR	32WR	21RF	29RF	24WR	29RF	29RF-2x10W	21RF-2x10W	21RF-2x5W	29RF	21RF-2x10W	21RF-2x5W	29RF-2x5W	29FL-2x10W
1400	12V 5A LKS1A-H10	12V 5A LKS1A-H10	---	---	12V 5A LKS1A-H10	---	---	---	---	---	---	---	---	---
2174	500V 470P	---	---	---	---	---	---	---	---	---	---	---	---	---
2175	16V 470U	---	---	---	---	---	---	---	---	---	---	---	---	---
2209	50V 10U	50V 10U	50V 10U	50V 4U7	50V 10U	50V 10U	50V 10U	50V 22U	50V 22U	50V 4U7	50V 10U	50V 10U	50V 10U	50V 10U
2216	10V 2200U	10V 2200U	16V 1000U	16V 1000U	10V 2200U	50V 1000U	16V 1000U	16V 1000U	16V 1000U	16V 1000U	16V 1000U	16V 1000U	10V 1000U	10V 2200U
2243	50V 10N	50V 10N	50V 10N	50V 10N	50V 10N	50V 10N	50V 10N	50V 6N8	50V 6N8	50V 2N2	50V 6N8	50V 6N8	50V 2N2	50V 2N2
2245	25V 330N	25V 330N	25V 330N	25V 220N	25V 220N	25V 220N	25V 220N	25V 330N	25V 330N	25V 220N	25V 220N	25V 220N	25V 100N	25V 100N
2247	10V 2200U	10V 2200U	16V 2200U	16V 1000U	10V 2200U	16V 1000U	16V 1000U	16V 1000U	16V 1000U	16V 1000U	16V 1000U	16V 1000U	16V 1000U	10V 2200U
2401	100V 2U2	100V 2U2	50V 2U2	50V 2U2	100V 2U2	50V 2U2	50V 2U2	50V 2U2	50V 2U2	50V 2U2	50V 2U2	50V 2U2	50V 2U2	50V 2U2
2405	25V 220U	25V 220U	16V 220U	25V 220U	25V 220U	25V 220U	25V 220U	16V 220U	16V 220U	25V 220U	16V 220U	16V 220U	25V 220U	25V 220U
2420	16V 1U	16V 1U	---	---	16V 1U	---	---	---	---	---	---	---	---	---
2421	50V 470P	50V 470P	---	---	50V 470P	---	---	---	---	---	---	---	---	---
2451	50V 22N	50V 22N	50V 15N	50V 22N	50V 22N	50V 22N	50V 22N	---	---	---	---	---	---	---
2454	250V 68N	250V 68N	---	---	250V 68N	---	---	---	---	---	---	---	---	---
2457	250V 470N	250V 470N	250V 330N	250V 330N	---	250V 330N	250V 330N	250V 270N	250V 270N	250V 360N	250V 270N	250V 270N	250V 330N	250V 330N
2458	---	---	100V 2U2	100V 2U2	---	100V 2U2	100V 2U2	100V 2U2	100V 2U2	100V 2U2	100V 2U2	100V 2U2	100V 2U2	100V 2U2
2463	2KV 680P	2KV 680P	2KV 470P	2KV 680P	2KV 1N2	2KV 680P	2KV 680P	2KV 470P	2KV 470P	2KV 2N2	2KV 390P	2KV 290P	2KV 2N2	2KV 2N2
2464	---	---	160V 2U2	160V 2U2	---	160V 2U2	160V 2U2	160V 2U2	160V 2U2	160V 2U2	160V 2U2	160V 2U2	160V 2U2	160V 2U2
2465	1K6V 12N	1K6V 12N	1K6V 8N2	1K6V 12N	1K6V 12N	1K6V 12N	1K6V 12N	1K6V 8N2	1K6V 8N2	1K6V 15N	1K6V 9N1	1K6V 9N1	1K6V 15N	1K6V 15N
2466	---	---	400V 15N	400V 10N	---	400V 10N	400V 10N	---	---	---	---	---	---	---
2467	1KV 9N1	1KV 9N1	---	---	1KV 9N1	---	---	400V 22N	400V 22N	400V 22N	400V 22N	400V 22N	400V 22N	400V 22N
2468	1KV 9N1	1KV 9N1	---	400V 18N	1KV 9N1	400V 18N	400V 18N	400V 22N	400V 22N	400V 15N	400V 22N	400V 22N	400V 15N	400V 15N
2469	250V 560N	250V 560N	---	---	250V 560N	---	---	---	---	---	---	---	---	---
2482	250V 33N	250V 33N	250V 33N	250V 68N	250V 68N	250V 68N	250V 68N	250V 33N	250V 33N	250V 120N	250V 33N	250V 33N	250V 120N	250V 120N
2490	100V 2U2	100V 2U2	---	---	100V 2U2	---	---	---	---	---	---	---	---	---
2493	---	---	400V 15N	---	---	---	---	---	---	---	---	---	---	---
3176	NFR25H 1R	---	---	---	---	---	---	---	---	---	---	---	---	---
3206	120K	120K	220K	33K	220K	150K	150K	100K	100K	33K	82K	82K	68K	68K
3247	560K	560K	180K	680K	680K	560K	560K	270K	270K	680K	270K	270K	680K	680K
3250	1K	1K	8K2	8K2	1K	8K2	8K2	8K2	8K2	8K2	8K2	8K2	8K2	6K2
3257	10M	10M	1M	10M	10M	10M	10M	10M	10M	10M	10M	10M	10M	10M
3258	100K	100K	180K	270K	100K	270K	270K	390K	390K	100K	100K	180K	180K	180K
3259	470K	470K	4M7	470K	470K	470K	470K	470K	470K	470K	470K	470K	470K	470K
3400	330R	330R	330R	330R	---	330R	330R	330R	330R	330R	330R	330R	330R	330K
3401	33K	33K	22K	220K	---	220K	220K	22K	22K	68K	33K	22K	33K	33K
3403	100K	100K	68K	82K	100K	82K	82K	100K	100K	100K	100K	100K	100K	100K
3405	4R7	4R7	4R7	4R7	10R	4R7	4R7	4R7	4R7	4R7	4R7	4R7	4R7	4R7
3406	4R7	4R7	4R7	4R7	10R	4R7	4R7	4R7	4R7	4R7	4R7	4R7	4R7	4R7
3407	4R7	4R7	---	---	---	---	---	---	---	---	---	---	---	---
3408	10K	10K	100R	100R	10K	100R	100R	100R	100R	100R	100R	100R	100R	100R
3447	180R	180R	180R	180R	180R	180R	180R	56R	56R	56R	56R	180R	56R	56R
3465	56K	56K	22K	27K	27K	27K	27K	27K	27K	27K	27K	68K	27K	27K
3468	180R	180R	180R	---	180R	100R	---	---	---	---	---	---	---	---
3481	22K	22K	27K	15K	10K	15K	15K	15K	15K	15K	22K	22K	15K	15K
3482	390R	390R	3K9	6K8	24K	5K6	5K6	12K	12K	8K2	3K9	3K9	8K2	8K2
3486	3W 22R	3W 22R	3W 33R	3W 22R	3W 22R	3W 22R	3W 22R	---	---	---	---	---	---	---
3489	3K9	3K9	---	---	3K9	---	---	---	---	---	---	---	---	---
3491	3K3	3K3	10K	10K	3K3	---	10K	10K	10K	10K	10K	10K	10K	10K
3492	330R	330R	1K	1K	330R	1K	1K	1K	1K	1K	1K	1K	1K	1K
3499	---	---	---	---	---	10K	---	---	---	---	---	---	---	---
3617	4K7	4K7	---	---	4K7	---	---	---	---	---	---	---	---	---
3619	8K2	8K2	---	---	8K2	---	---	---	---	---	---	---	---	---
3640	100R	100R	---	---	100R	---	---	---	---	---	---	---	---	---
4402	SMD JUMPER	SMD JUMPER	SMD JUMPER	SMD JUMPER	SMD JUMPER	SMD JUMPER	SMD JUMPER	---	---	---	---	---	---	---
4430	---	---	---	---	---	SMD JUMPER	---	---	---	---	---	---	---	---
5180	27U	27U	---	---	---	---	---	---	---	---	---	---	---	---
5400	BF40 C906-01	BF40 C906-01	---	---	8R40 C906-01	---	---	---	---	---	---	---	---	---
5401	---	---	1000U	1000U	---	1000U	1000U	1000U	1000U	1000U	1000U	1000U	1000U	1000U
5445	PSLOT 0V2076	PSLOT 0V2076	1342 0033C	PSLOT 29"RF	USLOT +S	USLOT 29"RF	PSLOT 29"RF	JF0501-2135	JF0501-2135	JF0501-2136	JF0501-2135	JF0501-2135	JF0601-2136	JF0501-2136
5451	22U	22U	33U	22U	22U	22U	22U	---	---	---	---	---	---	---
5453	---	---	JUMPER	JUMPER	---	---	---	---	---	---	---	LAL04 22U	LAL04 22U	---
5457	LNCOR DRUM	25UH	LINCOR DRUM	LINCOR DRUM	LINCOR DRUM	LINCOR DRUM	LINCOR DRUM	82UH	82UH	LNCOR DRUM	82UH	82UH	LINCOR DRUM	LINCOR DRUM
5461	SRW0913DR-T02	SRW0913DR-T02	SRW0913DR-T01	SRW0913DR-T06	SRW0913DR-T02	SRW0913DR-T02	SRW0913DR-T02	SC10009-03	SC100015-00	SC100015-00	SC10009-03	SC100015-00	SC10013-00	SC10015-00
5463	---	---	C957-02	CU15	---	CU15	CU15	C957-02	C957-02	CU15	C957-02	C957-02	CU15	---

CL 26532063_007.eps
210502

Mono Carrier: Frame Deflection

A3 FRAME DEFLECTION

MODEL	L2K2						
REGION	EU				AP	GL	CH/IN
TUBE	PHCO		LG.PH		LG.PH	SMGK(SF)	LG.PH
SET	28WR	32WR	29RF	24WR	21RF	21RF	29RF
2472	63V 150N	63V 150N	63V 150N	63V 150N	100V 10N	100V 10N	63V 150N
3470	470K	270K	330K	470K	270K	470K	470K
3471	2R2	3R9	3R3	2R2	3R9	3R9	3R9
3472	3R3	3R3	3R3	3R3	4R7	3R9	3R9
3473	3R9	3R9	3R3	3R9	6R8	---	---
3480	1R5	1R5	1R5	1R5	---	---	1R5
4470	---	---	---	---	SMD_JUMPER	SMD_JUMPER	---
5471	6U8	6U8	3U3	3U3	6U8	6U8	3U3
5472	3MUH3	3MUH3	6MUH8	3MUH3	3MUH3	6MUH8	3MUH3
9472	---	---	---	---	JUMPER	JUMPER	---

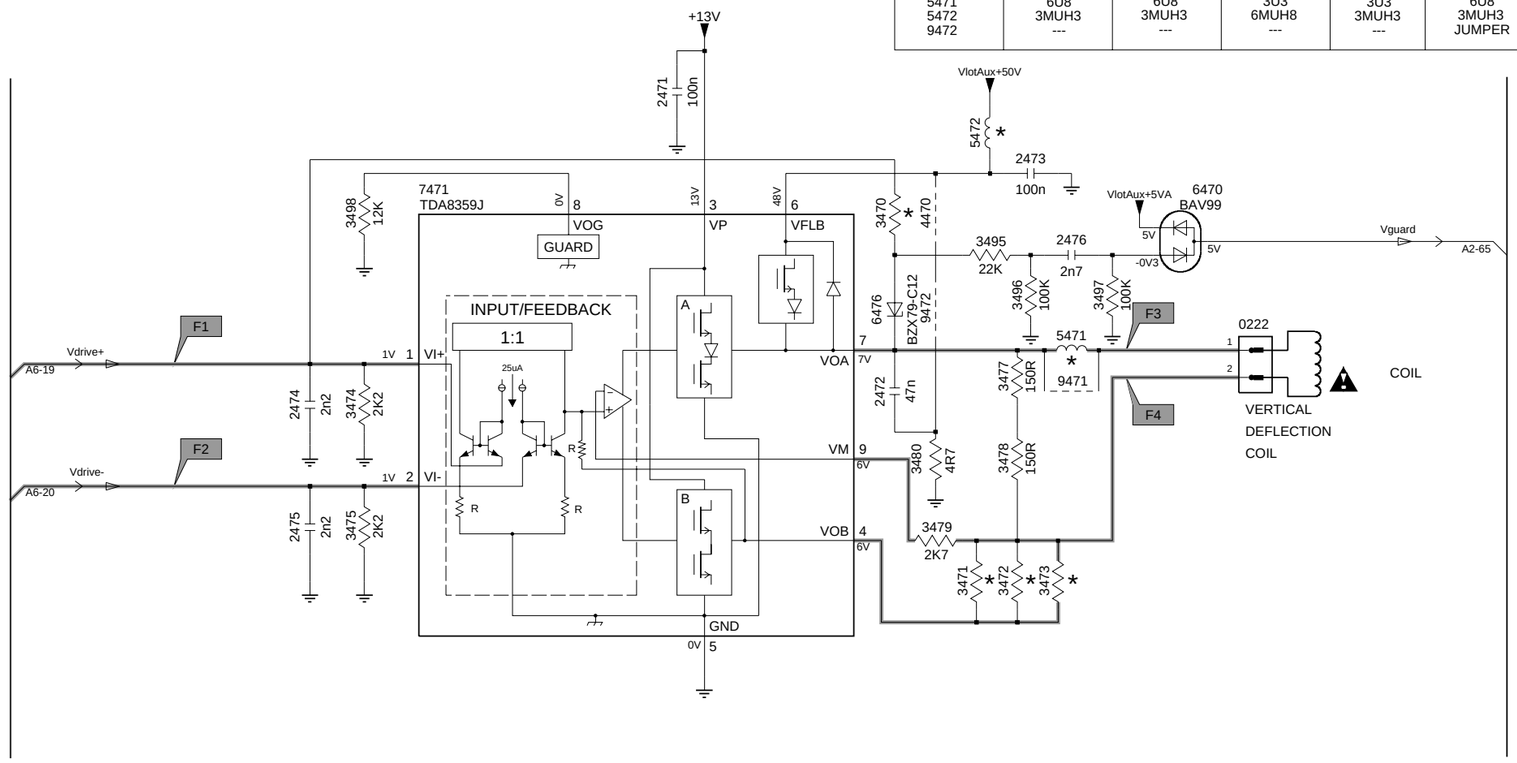

REGION	NAFTA/LATAM	NAFTA/LATAM	NAFTA/LATAM	NAFTA/LATAM
TUBE	PHILIPS	LG PHILIPS	PHILIPS	SMGK
TYPE OF TUBE	21RF	21RF	27V/29"	27RF
ITEM				
2472	10N	150N	150N	150N
3470	SM 270K	SM270K	SM 330K	SM 470K
3471	6R8	3R9	3R3	3R9
3472	6R8	6R8	3R3	3R9
3473	3R9	6R8	3R3	2R2
3480	-	1R5	1R5	1R5
4470	SM JUMPER	-	-	-
5471	3U3	6U8	3U3	6U8
9472	YES	-	-	-

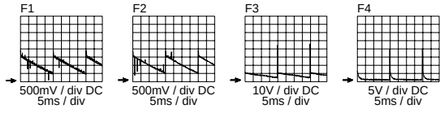

CL 26532063_004.eps
130602

0222 C8
2471 B5
2472 C6
2473 B7
2474 C3
2475 D3
2476 C7
3470 B6
3471 D7
3472 D7
3473 D7
3474 C4
3475 D4
3477 C7
3478 D7
3479 D7
3480 D6
3495 C7
3496 C7
3497 C7
3498 B4
4470 B7
5471 C7
5472 B7
6470 B8
6476 C6
7471 B4
9471 C7
9472 C7

Mono Carrier: Tuner IF

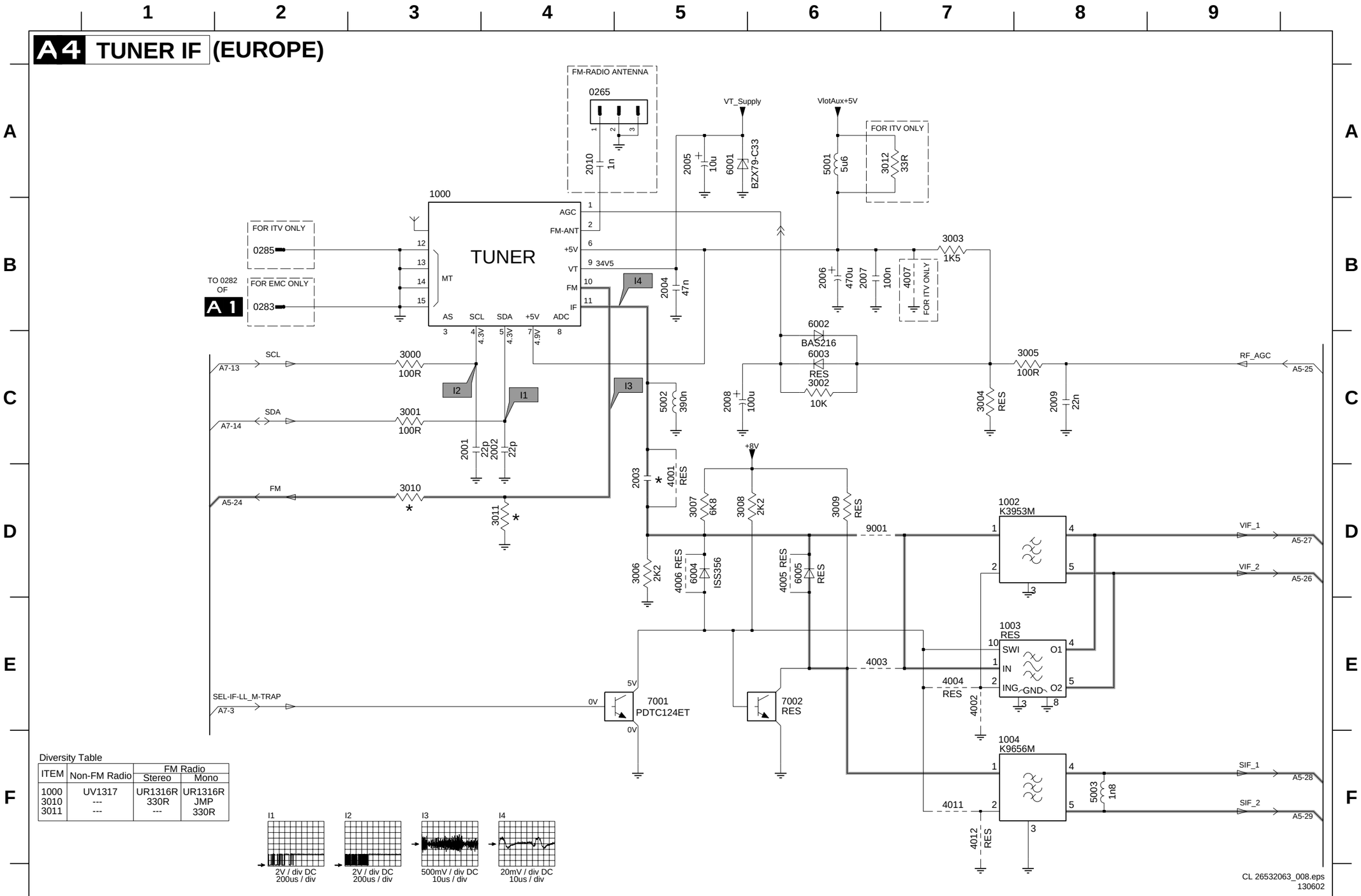

Diversity Table

ITEM	Non-FM Radio	FM Radio	
		Stereo	Mono
1000	UV1317	UR1316R	UR1316R
3010	---	330R	JMP
3011	---	---	330R

I1 2V / div DC 200us / div
I2 2V / div DC 200us / div
I3 500mV / div DC 10us / div
I4 20mV / div DC 10us / div

0265 A4
0283 B2
0285 B2
1000 A3
1002 D7
1003 E7
1004 F7
2001 C3
2002 C4
2003 D5
2004 B5
2005 A5
2006 B6
2007 B6
2008 C5
2009 C8
2010 A4
3000 C3
3001 C3
3002 C6
3003 B7
3004 C7
3005 C8
3006 D5
3007 D5
3008 D5
3009 D6
3010 D3
3011 D4
3012 A7
4001 D5
4002 E7
4003 E6
4004 E7
4005 D6
4006 D5
4007 B7
4011 F7
4012 F7
5001 A6
5002 C5
5003 F8
6001 A5
6002 B6
6003 C6
6004 D5
6005 D6
7001 E5
7002 E6
9001 D6

Mono Carrier: Video IF + Sound IF

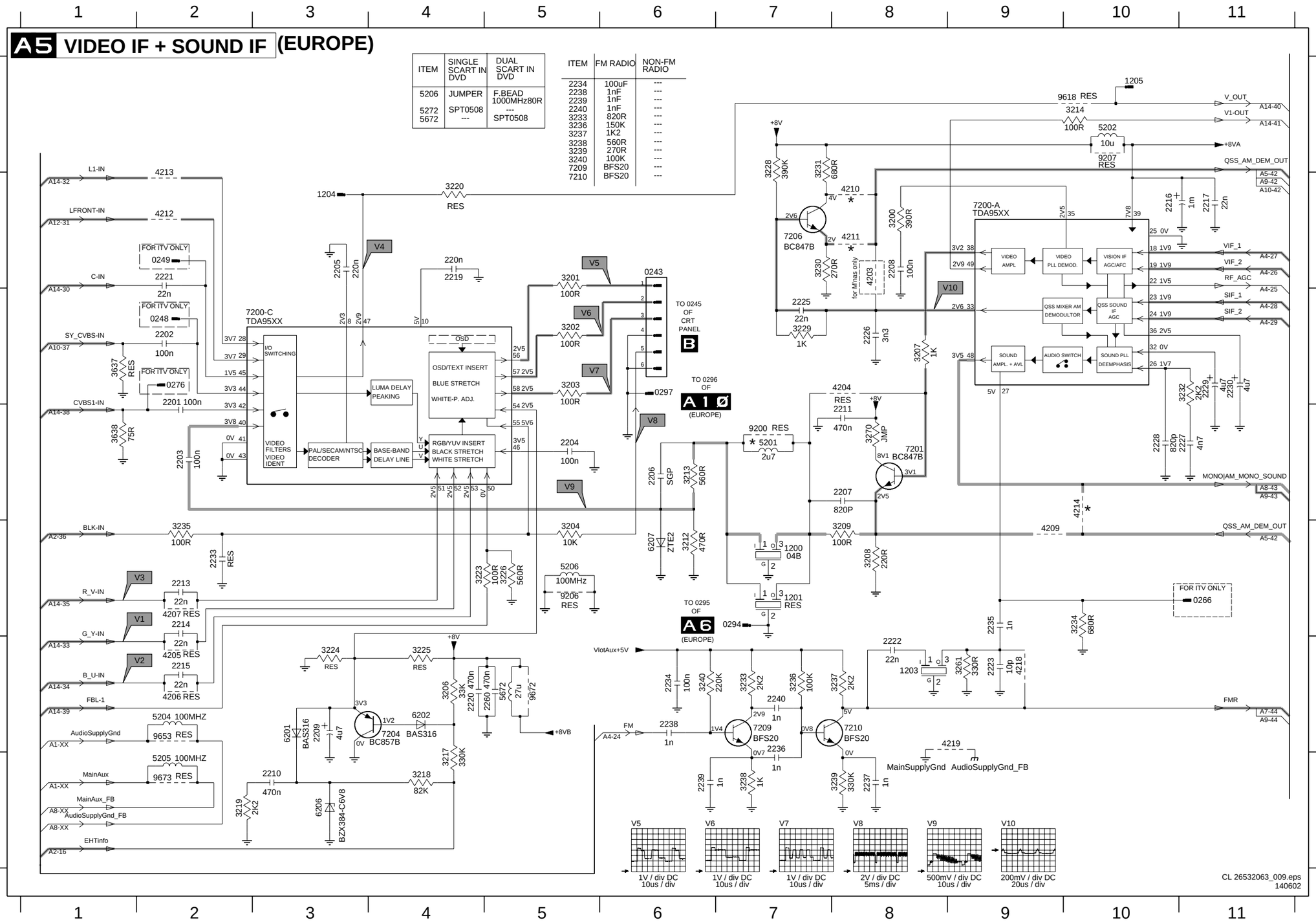

ITEM	SINGLE SCART IN DVD	DUAL SCART IN DVD
5206	JUMPER	F.BEAD 1000MHz80R
5272	SPT0508	---
5672	---	SPT0508

ITEM	FM RADIO	NON-FM RADIO
2234	100uF	---
2238	1nF	---
2239	1nF	---
2240	1nF	---
3233	820R	---
3236	150K	---
3237	1K2	---
3238	560R	---
3239	270R	---
3240	100K	---
7209	BFS20	---
7210	BFS20	---

0243 B6
0248 C2
0249 B2
0266 E11
0276 C2
0294 E7
0297 C6
1200 E7
1201 E7
1203 F8
1204 B3
1205 A10
2201 D2
2202 C2
2203 D2
2204 D5
2205 B3
2206 D6
2207 D8
2208 B8
2209 F3
2210 G3
2211 D8
2213 E2
2214 E2
2215 F2
2216 B10
2217 B11
2219 B4
2220 F4
2221 B2
2222 F8
2223 F9
2225 C7
2226 C8
2227 D11
2228 D10
2229 C11
2230 C11
2233 E2
2234 F6
2235 E9
2236 F7
2237 G8
2238 F6
2239 G6
2240 F7
2260 F5
3200 B8
3201 B5
3202 C5
3203 C5
3204 E5
3206 F4
3207 C8
3208 E8
3209 E8
3212 E6
3213 D6
3214 A10
3217 G4
3218 G4
3219 G2
3220 B4
3223 E4
3224 F3
3225 F4
3226 E5
3228 A7
3229 C7
3230 B7
3231 A7
3232 C11
3233 F7
3234 E10
3235 E2
3236 F7
3237 F8
3238 G7
3239 G8
3240 F6
3261 F9
3270 D8
3637 C1
3638 D1
4203 B8
4204 C8
4205 F2
4206 F2
4207 E2
4209 E9
4210 B8
4211 B8
4212 B2
4213 A2
4214 D10
4218 F9
4219 F9
5201 D7
5202 A10
5204 F2
5205 G2
5206 E5
5672 F5
6201 F3
6202 F4
6206 G3
6207 E6
7200-A B9
7200-C C3
7201 D8
7204 F4
7206 B7
7209 F7
7210 F8
9200 D7
9206 E5
9207 A10
9618 A10
9653 F2
9672 F5
9673 G2

Mono Carrier: Synchronisation

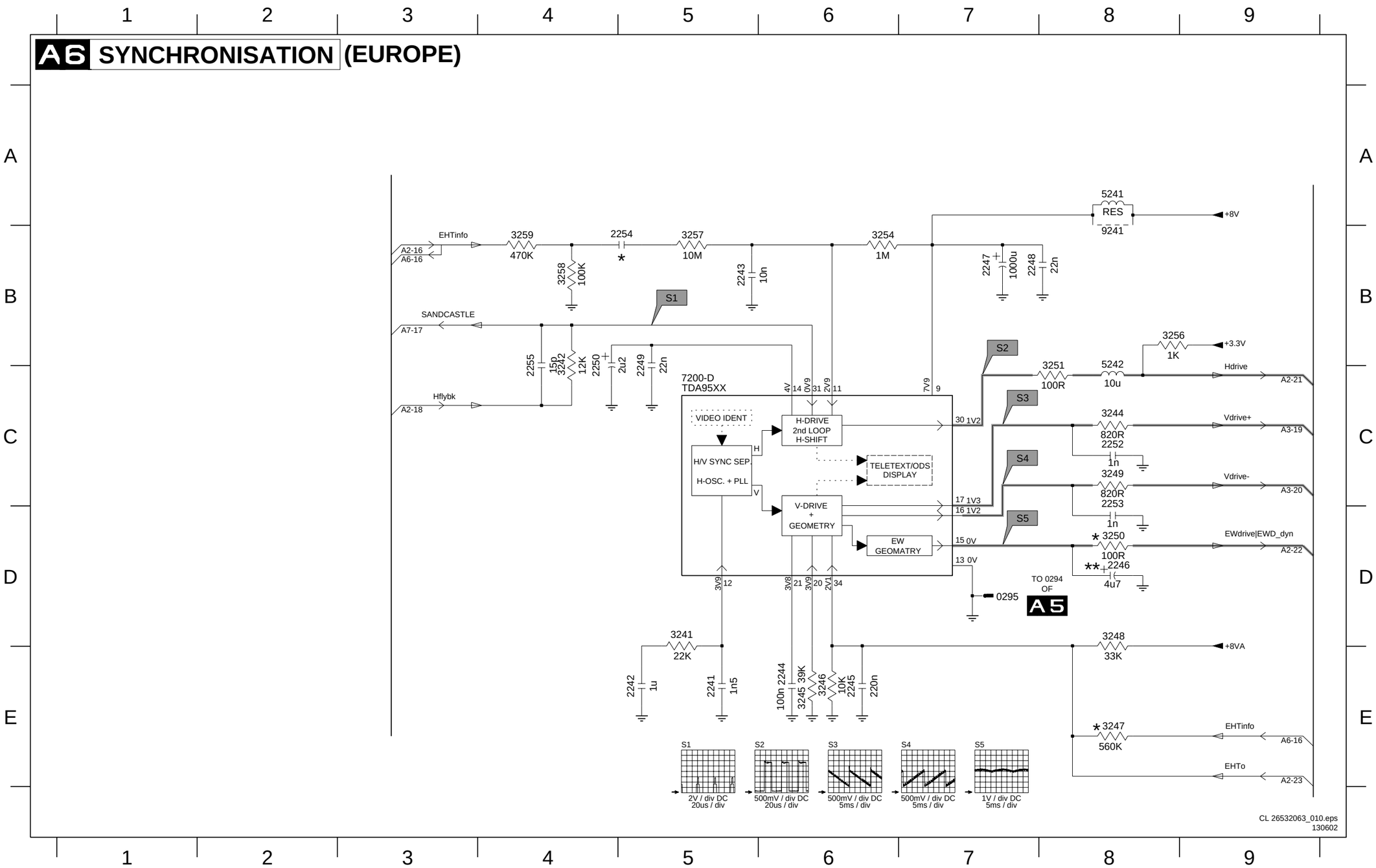

0295 D7
2241 E5
2242 E5
2243 B5
2244 E6
2245 E6
2246 D8
2247 B7
2248 B7
2249 B5
2250 B4
2252 C8
2253 C8
2254 B5
2255 B4
3241 D5
3242 B4
3244 C8
3245 E6
3246 E6
3247 E8
3248 D8
3249 C8
3250 D8
3251 C8
3254 B6
3256 B8
3257 B5
3258 B4
3259 B4
5241 A8
5242 C8
7200-D C5
9241 B8

Mono Carrier: Control

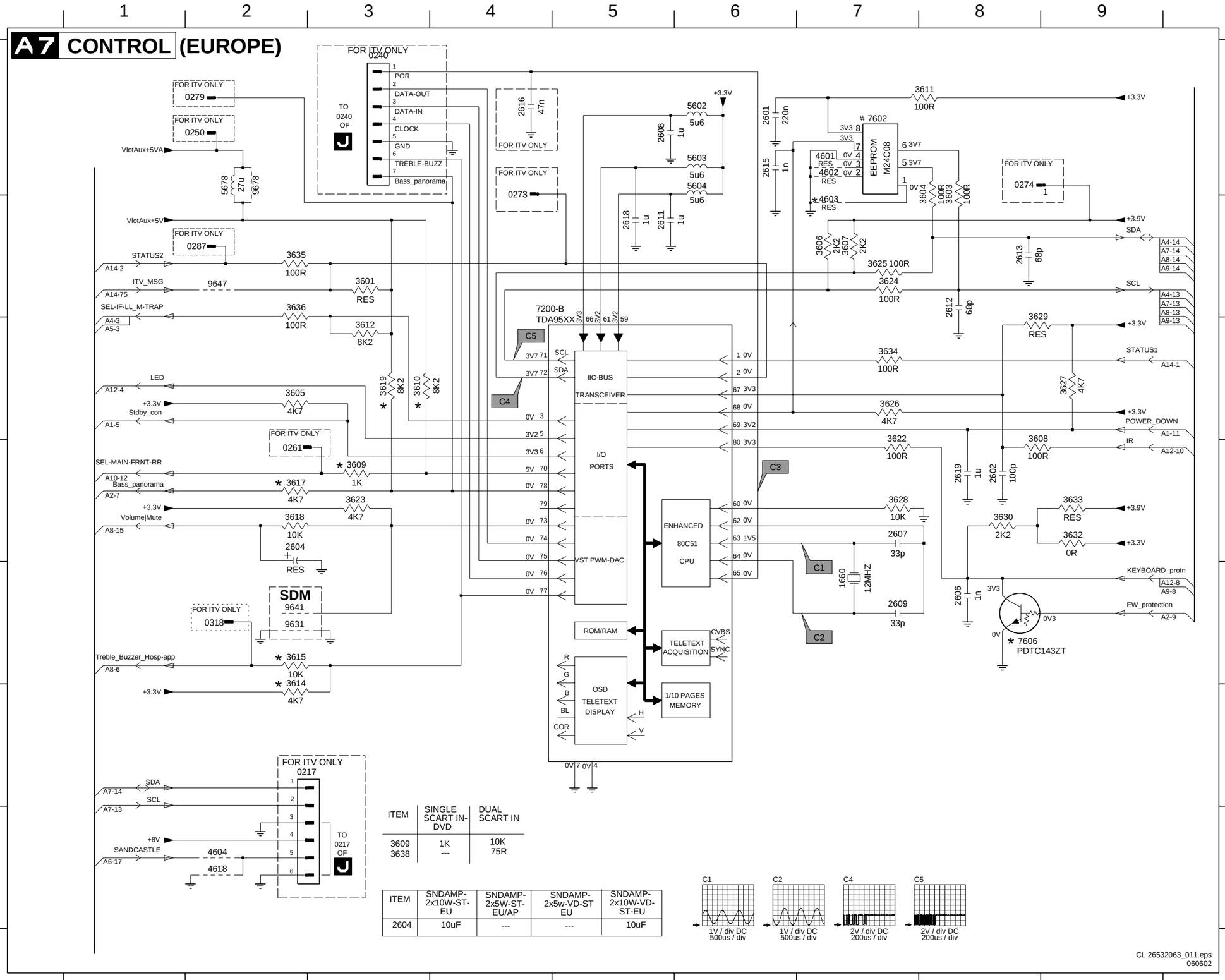

ITEM	SINGLE SCART IN-DVD	DUAL SCART IN
3609 3638	1K ---	10K 75R

ITEM	SNDAMP-2x10W-ST-EU	SNDAMP-2x5W-ST-EU/AP	SNDAMP-2x5w-VD-ST EU	SNDAMP-2x10W-VD-ST-EU
2604	10uF	---	---	10uF

C1 1V / div DC 500us / div
C2 1V / div DC 500us / div
C4 2V / div DC 200us / div
C5 2V / div DC 200us / div

0217 F2
0240 A3
0250 A1
0261 D2
0273 B4
0274 A8
0279 A1
0287 B2
0318 E2
1660 E7
2601 A6
2602 D8
2604 D2
2606 E8
2607 D7
2608 A5
2609 E7
2611 B5
2612 B8
2613 B8
2615 A6
2616 A4
2618 B5
2619 D8
3601 B3
3603 A8
3604 A8
3605 C2
3606 B7
3607 B7
3608 D8
3609 D3
3610 C3
3611 A8
3612 C3
3614 F2
3615 E2
3617 D2
3618 D2
3619 C3
3622 D7
3623 D3
3624 B7
3625 B7
3626 C7
3627 C9
3628 D7
3629 C8
3630 D8
3632 D9
3633 D9
3634 C7
3635 B2
3636 B2
4601 A7
4602 A7
4603 B7
4604 G2
4618 G2
5602 A6
5603 A6
5604 A6
5678 A2
7200-B B4
7602 A7
7606 E8
9631 E2
9641 E2
9647 B2
9678 A2

Mono Carrier: Audio Amplifier

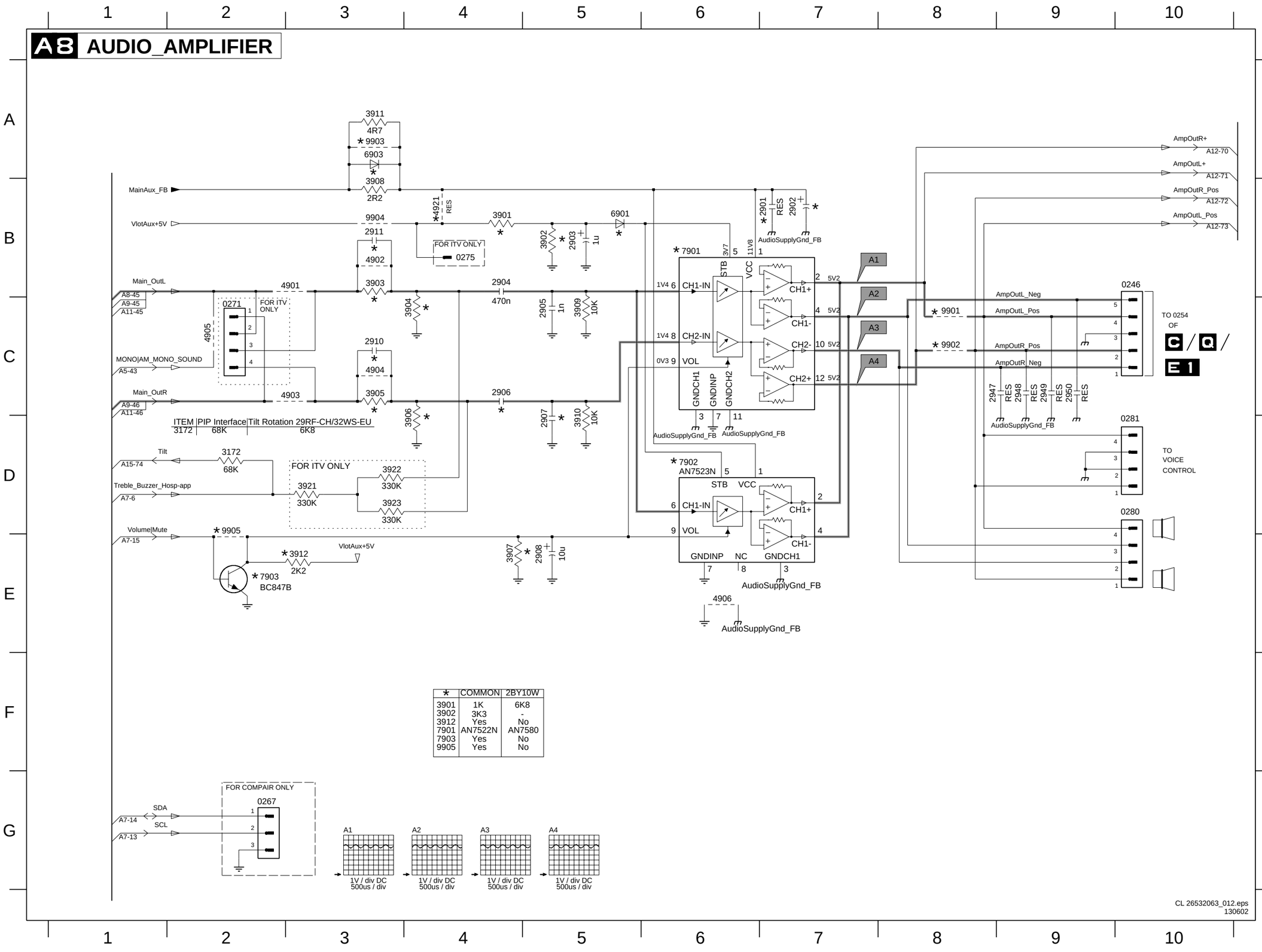

*	COMMON	2BY10W
3901	1K	6K8
3902	3K3	-
3912	Yes	No
7901	AN7522N	AN7580
7903	Yes	No
9905	Yes	No

CL 26532063_012.eps
130602

0246 B10
0267 G2
0271 C2
0275 B4
0280 D10
0281 C10
2901 B7
2902 B7
2903 B5
2904 B4
2905 C5
2906 C4
2907 D5
2908 E5
2910 C3
2911 B3
2947 C8
2948 C9
2949 C9
2950 C9
3172 D2
3901 B4
3902 B5
3903 B3
3904 C4
3905 C3
3906 D4
3907 E4
3908 B3
3909 C5
3910 D5
3911 A3
3912 E3
3921 D3
3922 D3
3923 D3
4901 B3
4902 B3
4903 C3
4904 C3
4905 C2
4906 E6
4921 B4
6901 B5
6903 A3
7901 B6
7902 D6
7903 E2
9901 C8
9902 C8
9903 A3
9904 B3
9905 D2

Mono Carrier: Audio Amplifier Diversity Tables

Diversity Table For A 8 Audio Amplifier

ITEM	Mono Sets Or 2x1W-NA	2x10W-AP	Others
2902	220uF/50V	1000uF/25V	1000uF/16V

ITEM	With Stereo	W/O Stereo
4905	---	JUMPER

ITEM	Using 2K2 Chassis-2x10W	Using 2K2 Chassis-Non 2x10W
9905	---	JUMPER

ITEM	SNDAMP-2x10W-ST-EU	SNDAMP-2x5W-ST-EU/AP	SNDAMP-2x5w-VD-ST EU	SNDAMP-2x10W-VD-ST-EU
2902	1000uF/25V	1000uF/16V	1000uF/16V	1000uF/25V
2905	1nF	1nF	560pF	560pF
2907	1nF	1nF	560pF	560pF
2910	1nF	3K3	---	---
2911	1nF	3n3	---	---
2950	---	330pF	---	---
3901	6K8	1K	1K	6K8
3902	---	3K3	3K3	---
3903	82K	3K3	12K	82K
3904	---	10K	10K	---
3905	8K2	3K3	12K	82K
3906	---	10K	10K	---
3907	---	6K8	6K8	---
3909	27K	---	---	27K
3910	27K	---	---	27K
3912	820R	---	---	820R
4905	---	---	---	---
7901	AN7580	AN7522N	AN7522N	AN7580
7902	---	---	---	---
7903	BC857B	---	---	BC857B
9905	---	JMP	JMP	---
9923	JMP	---	---	JMP

ITEM	SNDAMP-1x1W-MN-GL	SNDAMP-2x1W-ST-EU/AP	SNDAMP-1x3W-NA/LA	SNDAMP-2x10W-ST-AP	SNDAMP-2x3W-ST-NA	SNDAMP-2x5W-ST-EU/AP	SNDAMP-2x5W-ST-IND-MKII	SNDAMP-2x5W-ST-LA	SNDAMP-2x1W-NA	SNDAMP-2x5W-LA
2904	470nF	470nF	470nF	470nF	470nF	470nF	470nF	470nF	470nF	470nF
2905	1nF	1nF	1nF	1nF	1nF	1nF	1nF	1nF	1nF	1nF
2906	---	470nF	---	470nF	470nF	470nF	470nF	470nF	470nF	470nF
2907	---	1nF	---	1nF	1nF	1nF	1nF	1nF	1nF	1nF
2910	---	3n3	---	1nF	3n3	3n3	3n3	3n3	3n3	3n3
2911	---	3n3	---	1nF	3n3	3n3	3n3	3n3	3n3	3n3
2950	330nF	330pF	330pF	---	330pF	330pF	330pF	330pF	330pF	330pF
3901	1K	1K	1K	6K8	1K	1K	1K	1K	1K	1K
3902	3K3	3K3	3K3	---	3K3	3K3	3K3	3K3	3K3	3K3
3903	18K	3K3	18K	22K	3K3	3K3	3K3	3K3	3K3	3K3
3904	8K2	10K	10K	---	10K	10K	10K	10K	10K	10K
3905	---	3K3	---	22K	3K3	3K3	3K3	3K3	3K3	3K3
3906	---	10K	---	---	10K	10K	10K	10K	10K	10K
3907	8K2	6K8	8K2	8K2	8K2	6K8	6K8	8K2	8K2	8K2
3909	---	---	---	27K	---	---	---	---	---	---
3910	---	---	---	27K	---	---	---	---	---	---
3912	---	---	---	2K2	---	---	---	---	---	---
6903	1N5062	---	---	---	---	---	---	---	1N5062	---
7901	---	AN7522	---	AN7580	AN7522	AN7522	AN7522 PH	AN7522	AN7522	AN7522
7902	AN7523	---	AN7523	---	---	---	---	---	---	---
7903	---	---	---	BC847B	---	---	---	---	---	---
9903	---	JMP	JMP	JMP	JMP	JMP	JMP	JMP	---	JMP
9914	JMP	JMP	JMP	JMP	JMP	JMP	JMP	JMP	JMP	JMP
9916	JMP	JMP	JMP	JMP	JMP	JMP	JMP	JMP	JMP	JMP
9923	---	---	---	JMP	---	---	---	---	---	---

ITEM	SNDAMP-2x3W-LA	SNDAMP-2x1W-NA	SNDAMP-2x3W-ST-NA	SNDAMP-2x5W-ST-AP	SNDAMP-2x3W-ST-NDBX-NA/LA	SNDAMP-2x5W-ST+WOOFER-IND	SNDAMP-1x4W-MN-AP
2904	470nF	470nF	470nF	470nF	27nF	47nF	470pF
2905	1nF	1nF	1nF	1nF	1n2	1nF	1nF
2906	470nF	470nF	470nF	470nF	27nF	47nF	---
2907	1nF	1nF	1nF	1nF	1n2	1nF	---
2910	3n3	3n3	3n3	3n3	10nF	10nF	---
2911	3n3	3n3	3n3	3n3	10nF	10nF	---
2950	330pF	330pF	330pF	330pF	330pF	330pF	330pF
3901	1K	1K	1K	1K	1K	1K	1K
3902	3K3	3K3	3K3	3K3	3K3	3K3	3K3
3903	3K3	3K3	3K3	3K3	3K3	8K2	18K
3904	10K	10K	10K	10K	10K	10K	10K
3905	3K3	3K3	3K3	3K3	3K3	8K2	---
3906	10K	10K	10K	10K	10K	10K	---
3907	8K2	8K2	8K2	6K8	8K2	6K8	8K2
3909	---	---	---	---	---	---	---
3910	---	---	---	---	---	---	---
3912	---	---	---	---	---	---	---
6903	---	1N5062	---	---	---	---	---
7901	AN7522	AN7522	AN7522	AN7522	AN7522	AN7522 PH	---
7902	---	---	---	---	---	---	AN7523 PH
7903	---	---	---	---	---	---	---
9903	JMP	---	JMP	JMP	JMP	JMP	JMP
9914	JMP	JMP	JMP	JMP	JMP	JMP	---
9916	JMP	JMP	JMP	JMP	JMP	JMP	---
9923	---	---	---	---	---	---	---

CL 26532063_013.eps
210502

Personal Notes:

Mono Carrier: NICAM + 2CS + BTSC (Stereo / SAP) Decoder

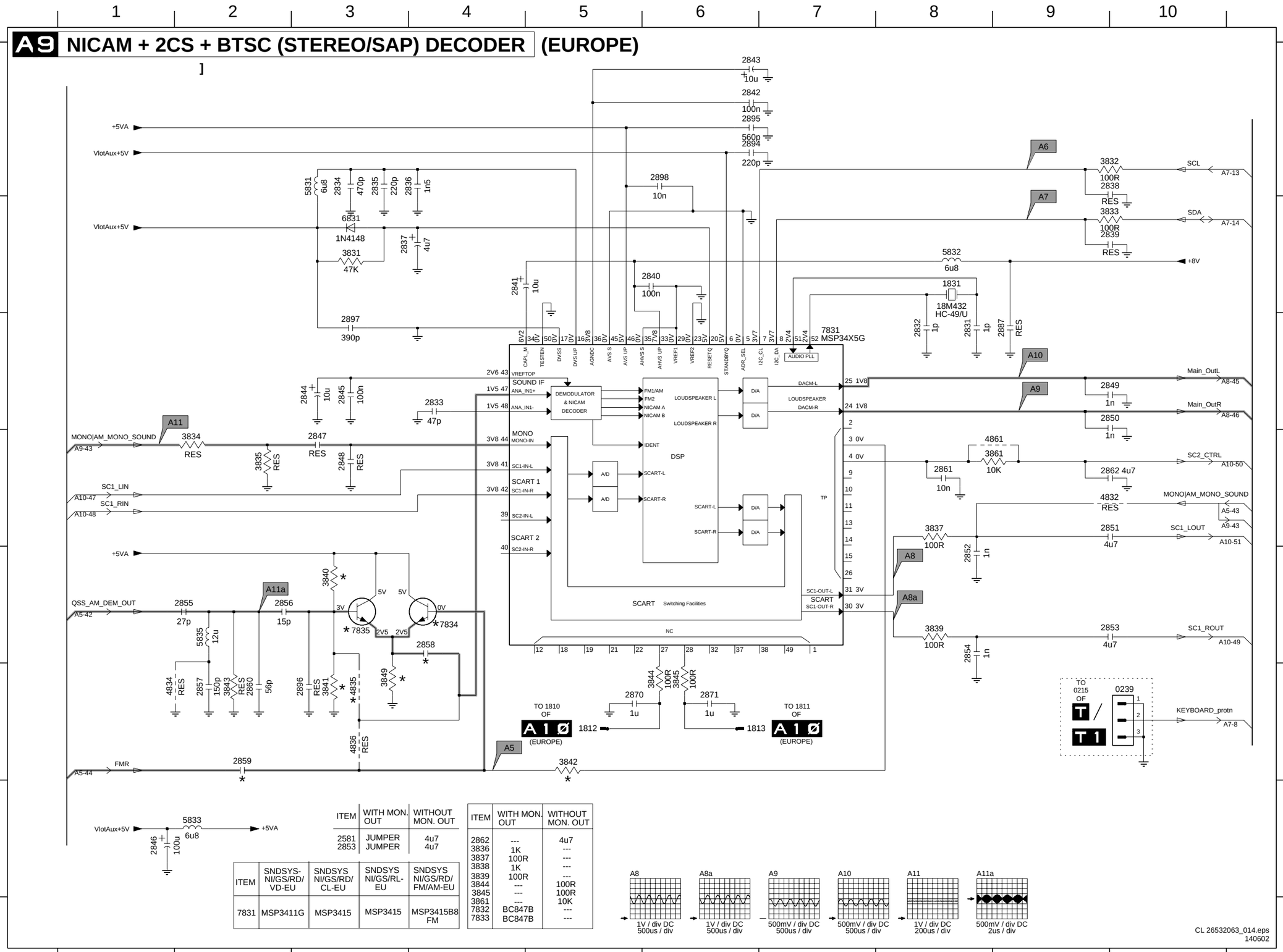

ITEM	WITH MON. OUT	WITHOUT MON. OUT
2581	JUMPER	4u7
2853	JUMPER	4u7

ITEM	WITH MON. OUT	WITHOUT MON. OUT
2862	---	4u7
3836	1K	---
3837	100R	---
3838	1K	---
3839	100R	---
3844	---	100R
3845	---	100R
3861	---	10K
7832	BC847B	---
7833	BC847B	---

ITEM	SNDSYS-NI/GS/RD/VD-EU	SNDSYS NI/GS/RD/CL-EU	SNDSYS NI/GS/RL-EU	SNDSYS NI/GS/RD/FM/AM-EU
7831	MSP3411G	MSP3415	MSP3415	MSP3415B8 FM

0239 F10
1812 F5
1813 F7
1831 B8
2831 C8
2832 C8
2833 C4
2834 A3
2835 A3
2836 A4
2837 B3
2838 A10
2839 B10
2840 B6
2841 B4
2842 A6
2843 A6
2844 C3
2845 C3
2846 G1
2847 D3
2848 D3
2849 C10
2850 C10
2851 D10
2852 E8
2853 E10
2854 E8
2855 E2
2856 E2
2857 F2
2858 E4
2859 F2
2860 F2
2861 D8
2862 D10
2870 F5
2871 F6
2887 C9
2894 A6
2895 A6
2896 F3
2897 C3
2898 A6
3831 B3
3832 A10
3833 B10
3834 D2
3835 D2
3837 D8
3839 E8
3840 E3
3841 F3
3842 F5
3843 F2
3844 F6
3845 F6
3849 F3
3861 D9
4832 D10
4834 F1
4835 F3
4836 F3
4861 D9
5831 A3
5832 B8
5833 G2
5835 E2
6831 B3
7831 C7
7834 E4
7835 E3

Mono Carrier: Audio / Video Source Switching

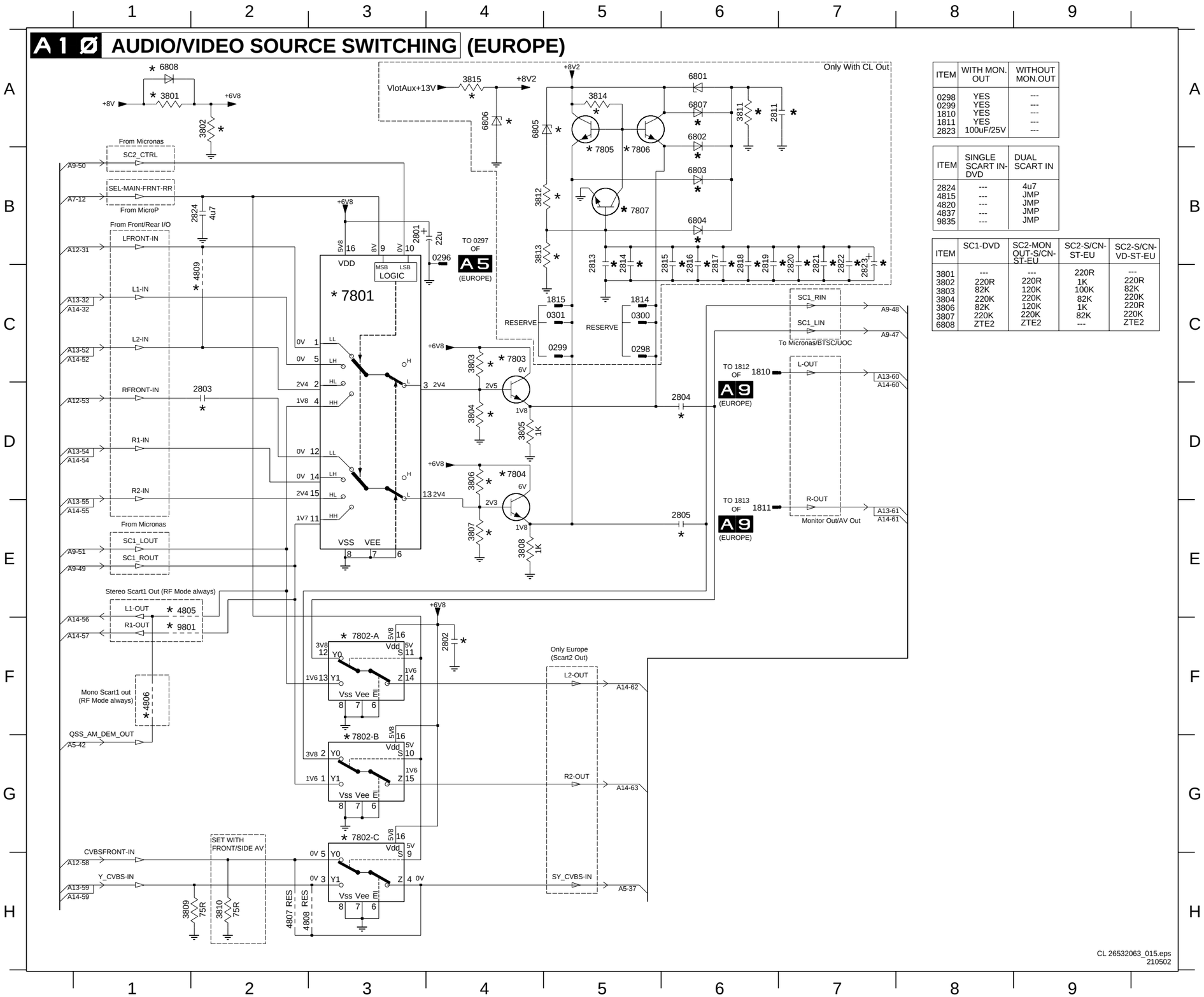

ITEM	WITH MON. OUT	WITHOUT MON.OUT
0298	YES	---
0299	YES	---
1810	YES	---
1811	YES	---
2823	100uF/25V	---

ITEM	SINGLE SCART IN-DVD	DUAL SCART IN
2824	---	4u7
4815	---	JMP
4820	---	JMP
4837	---	JMP
9835	---	JMP

ITEM	SC1-DVD	SC2-MON OUT-S/CN-ST-EU	SC2-S/CN-ST-EU	SC2-S/CN-VD-ST-EU
3801	---	---	220R	---
3802	220R	220R	1K	220R
3803	82K	120K	100K	82K
3804	220K	220K	82K	220K
3806	82K	120K	1K	220R
3807	220K	220K	82K	220K
6808	ZTE2	ZTE2	---	ZTE2

0296 B4
0298 C5
0299 C5
0300 C5
0301 C5
1810 C6
1811 E6
1814 C5
1815 C5
2801 B3
2802 F4
2803 D2
2804 D6
2805 E6
2811 A6
2813 B5
2814 B5
2815 B6
2816 B6
2817 B6
2818 B6
2819 B6
2820 B7
2821 B7
2822 B7
2823 C7
2824 B2
3801 A1
3802 A2
3803 C4
3804 D4
3805 D4
3806 D4
3807 E4
3808 E4
3809 H1
3810 H2
3811 A6
3812 B4
3813 B4
3814 A5
3815 A4
4805 E1
4806 F1
4807 H2
4808 H3
4809 C2
6801 A6
6802 A6
6803 B6
6804 B6
6805 A4
6806 A4
6807 A6
6808 A1
7801 C3
7802-A F3
7802-B G3
7802-C G3
7803 C4
7804 D4
7805 B5
7806 B5
7807 B5
9801 F1

Mono Carrier: Front I/O + Front Control + Headphone

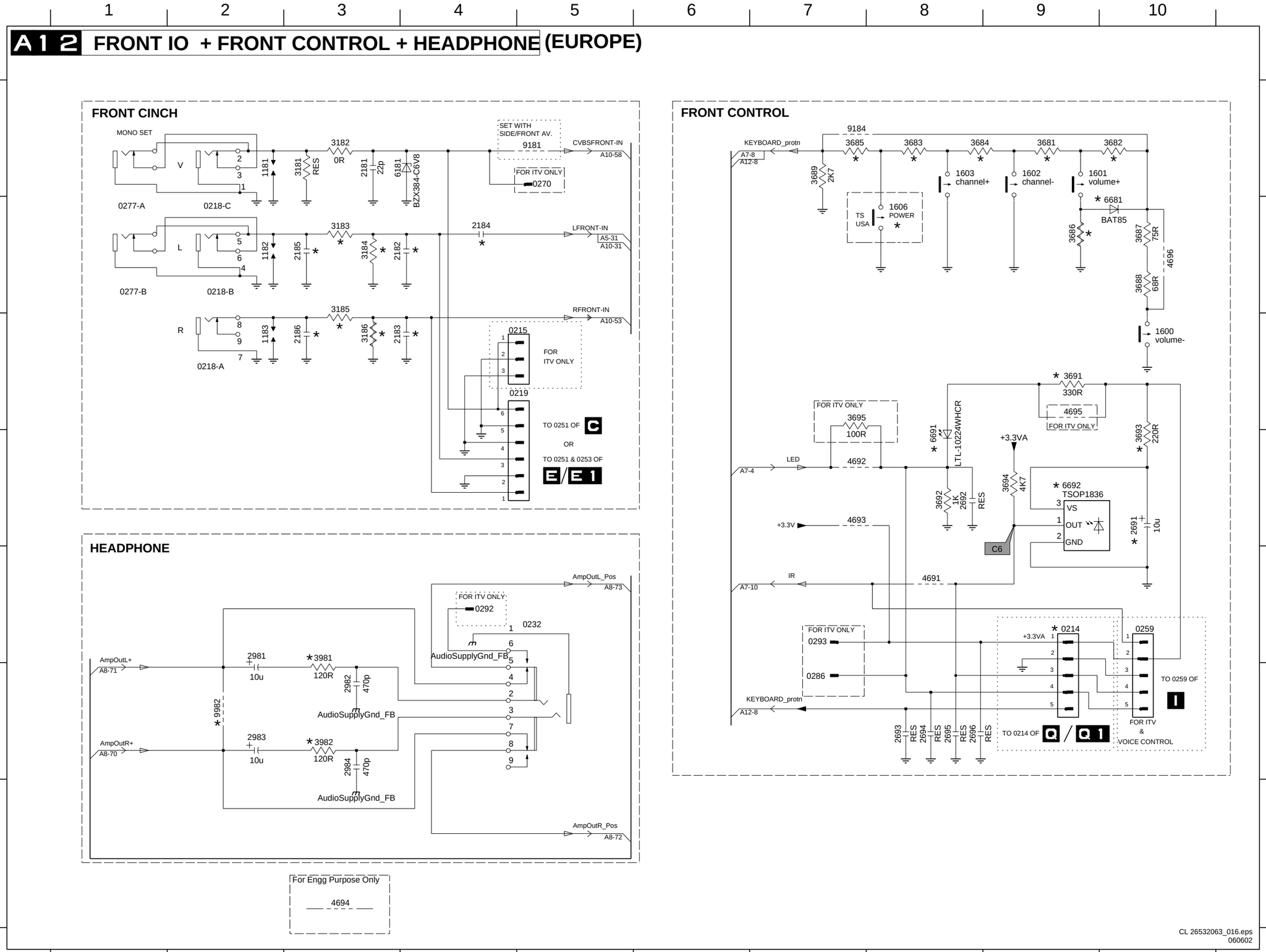

0214 E9
0215 C4
0218-A C2
0218-B B2
0218-C B2
0219 C4
0232 E5
0259 E10
0270 A5
0277-A B1
0277-B B1
0286 F7
0292 E4
0293 E7
1181 A2
1182 B2
1183 C2
1600 C10
1601 A9
1602 A9
1603 A8
1606 B8
2181 A3
2182 B3
2183 C3
2184 B4
2185 B3
2186 C3
2691 D10
2692 D8
2693 F8
2694 F8
2695 F8
2696 F8
2981 E2
2982 F3
2983 F2
2984 F3
3181 A3
3182 A3
3183 B3
3184 B3
3185 B3
3186 C3
3681 A9
3682 A10
3683 A8
3684 A8
3685 A7
3686 B9
3687 B10
3688 B10
3689 A7
3691 C9
3692 D8
3693 D10
3694 D9
3695 C7
3981 E3
3982 F3
4691 E8
4692 D7
4693 D7
4694 G3
4695 C9
4696 B10
6181 A4
6681 B10
6691 D8
6692 D9
9181 A5
9184 A7
9982 F2

Mono Carrier: Front Control Diversity Tables

Diversity Table For A12 Front Control

For Front Control

ITEM	55K NA	55K LA	NON 55K NA	NON 55K LA	IR + LED NA	IR + LED LA	KEYBOARD+ IR + LED LA
0231	---	YES	---	YES	---	YES	YES
0239	---	---	---	---	YES	YES	---
1600	YES	YES	YES	YES	---	---	YES
1601	YES	YES	YES	YES	---	---	YES
1602	YES	YES	YES	YES	---	---	YES
1603	YES	YES	YES	YES	---	---	YES
1606	YES	---	YES	390	YES	---	---
3681	*180	*180	390	3K	---	---	390
3682	*270	*270	3K	560	---	---	3K3
3684	*390	*390	560	560	YES	---	560
3685	---	---	560	1K5	*1K5	---	560
3686	JMP	JMP	1K5	---	---	---	1K5
3687	*75	*75	---	---	---	---	---
3688	*68	*68	---	---	---	---	---
3689	*2K7	*2K7	---	---	---	---	---
4696	---	---	JMP	JMP	---	JMP	JMP
6681	---	---	BAT85	BAT85	---	---	BAT85
9184	---	YES	---	---	---	---	---
9500	---	---	YES	---	YES	---	---
9501	---	---	YES	---	YES	---	---

ITEM	SINGLE SCART IN-DVD	DUAL SCART IN
3609	1K	10K
3538	---	75R

* 1% TOLERENCE RESISTER

ITEM	KEYBOARD+ IR+LED-GL	IR+LED-EU/LA/AP	TC.PNL+FI. PNL-INTERF EU/NA/AP	L2K2.FRNT 55K-NA	L2K2.FRNT 55K-LA	L2K2.FRNT NON-55K-NA	L2K2.FRNT NON-55K-LA	IR+LED.55K NA
0214	---	---	YES	---	---	---	---	---
0239	---	YES	YES	---	---	---	---	YES
1600	YES	---	---	YES	YES	YES	YES	---
1601	YES	---	---	YES	YES	YES	YES	---
1602	YES	---	---	YES	YES	YES	YES	---
1603	YES	---	---	YES	YES	YES	YES	---
1606	---	---	---	YES	---	YES	---	YES
2691	10uF	10uF	---	10uF	10uF	10uF	10uF	10uF
3681	390R	---	---	180R	180R	390R	390R	---
3682	3K3	---	---	270R	270R	3K3	3K3	---
3683	390R	---	---	390R	390R	390R	390R	---
3684	560R	---	---	390R	390R	560R	560R	---
3685	560R	---	---	---	---	560R	560R	1K5
3686	1K5	---	---	JUMPER	JUMPER	1K5	1K5	---
3687	---	---	---	75R	75R	---	---	---
3688	---	---	---	68R	68R	---	---	---
3689	---	---	---	2K7	2K7	---	---	---
3691	330R	330R	---	330R	330R	330R	330R	330R
3693	220R	220R	---	220R	220R	220R	220R	220R
4696	YES	---	---	---	---	YES	YES	---
6681	BAT85	---	---	---	---	BAT85	BAT85	---
6691	YES	YES	---	YES	YES	YES	YES	YES
6692	YES	YES	---	YES	YES	YES	YES	YES
9184	---	---	---	YES	YES	---	---	---

ITEM	SNDAMP-2x10W-ST-EU	SNDAMP-2x5W-ST-EU/AP	SNDAMP-2x5W-VD-ST-EU	SNDAMP-2x10W-VD-ST-EU
2604	10uF	---	---	10uF

CL 26532063_017.eps
210502

Mono Carrier: Rear I/O SCART Diversity Table

DIVERSITY TABLE FOR A14 REAR I/O SCART

ITEM	SINGLE SCART IN-DVD	DUAL SCART IN
2131	---	390pF
2132	---	390pF
2133	---	4u7
2134	---	390pF
2135	---	390pF
2136	---	4u7
2137	---	390pF
2138	---	390pF
2139	---	4U7
2140	---	390pF
2141	---	390pF
2142	---	4u7
2143	---	330pF
2144	---	330pF
2145	---	22pF
2147	---	22pF
3121	75R	---
3131	---	150R
3132	---	220K
3133	---	150R
3134	---	47K
3135	---	150R
3136	---	220K
3138	---	47K
3139	---	27K
3140	---	6K8
3141	---	75R
3142	---	100R
3143	---	68R
3144	---	1K
3146	---	JMP
4105	JMP	---

ITEM	WITH MON. OUT	WITHOUT MON.OUT
2131	330pF	---
2152	4u7	---
2153	330pF	---
2154	4u7	---
3151	150R	---
3152	220K	---
3153	150R	---
3154	220K	---
7131	BC847B	---

CL 26532063_019.eps
210502

Mono Carrier: Rear I/O SCART

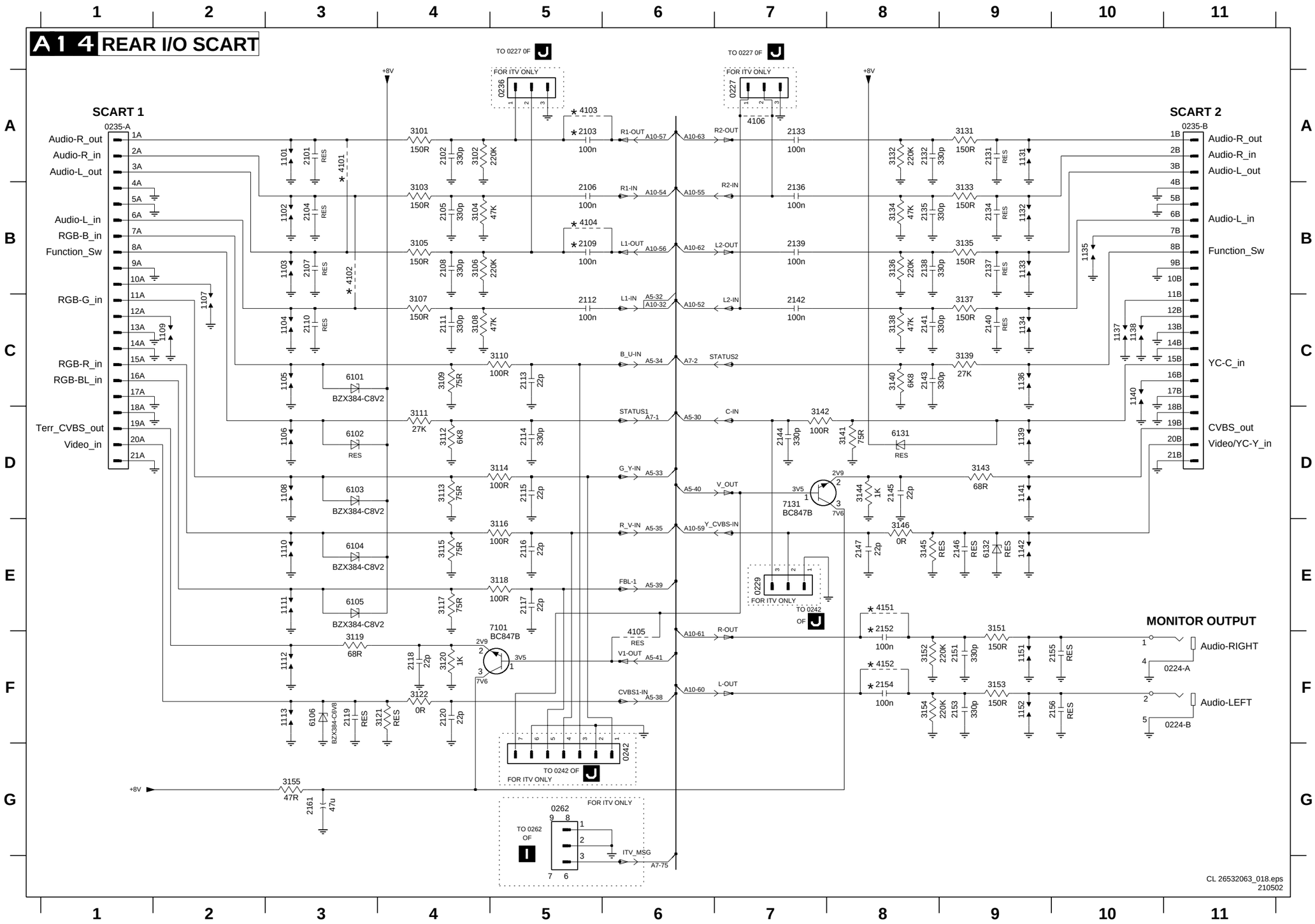

0224-A F11
0224-B F11
0227 A7
0229 E7
0235-A A1
0235-B A11
0236 A5
0242 F6
0262 G5
1101 A3
1102 B3
1103 B3
1104 C3
1105 C3
1106 D3
1107 C2
1108 D3
1109 C2
1110 E3
1111 E3
1112 F3
1113 F3
1131 A9
1132 B9
1133 B9
1134 C9
1135 B10
1136 C9
1137 C10
1138 C10
1139 D9
1140 C10
1141 D9
1142 E9
1151 F9
1152 F9
2101 A3
2102 A4
2103 A5
2104 B3
2105 B4
2106 B5
2107 B3
2108 B4
2109 B5
2110 C3
2111 C4
2112 C5
2113 C5
2114 D5
2115 D5
2116 E5
2117 E5
2118 F4
2119 F3
2120 F4
2131 A9
2132 A8
2133 A7
2134 B9
2135 B8
2136 B7
2137 B9
2138 B8
2139 B7
2140 C9
2141 C8
2142 C7
2143 C8
2144 D7
2145 D8
2146 E9
2147 E8
2151 F9
2152 F8
2153 F9
2154 F8
2155 F10
2156 F10
2161 G3
3101 A4
3102 A4
3103 B4
3104 B4
3105 B4
3106 B4
3107 C4
3108 C4
3109 C4
3110 C5
3111 D4
3112 D4
3113 D4
3114 D5
3115 E4
3116 E5
3117 E4
3118 E5
3119 F3
3120 F4
3121 F4
3122 F4
3131 A9
3132 A8
3133 B9
3134 B8
3135 B9
3136 B8
3137 C9
3138 C8
3139 C9
3140 C8
3141 D8
3142 D7
3143 D9
3144 D8
3145 E8
3146 E8
3151 E9
3152 F8
3153 F9
3154 F8
3155 G3
4101 A3
4102 B3
4103 A5
4104 B5
4105 F6
4106 A7
4151 E8
4152 F8
6101 C3
6102 D3
6103 D3
6104 E3
6105 E3
6106 F3
6131 D8
6132 E9
7101 E5
7131 D7

Mono Carrier: Tilt and Rotation

0268 C8
0290 F5
0291 F8
2171 C4
2172 C5
2174 F7
2175 F7
3171 C4
3173 C4
3174 C5
3176 F6
5180 F6
6171 F7
7000 B6
9180 F6

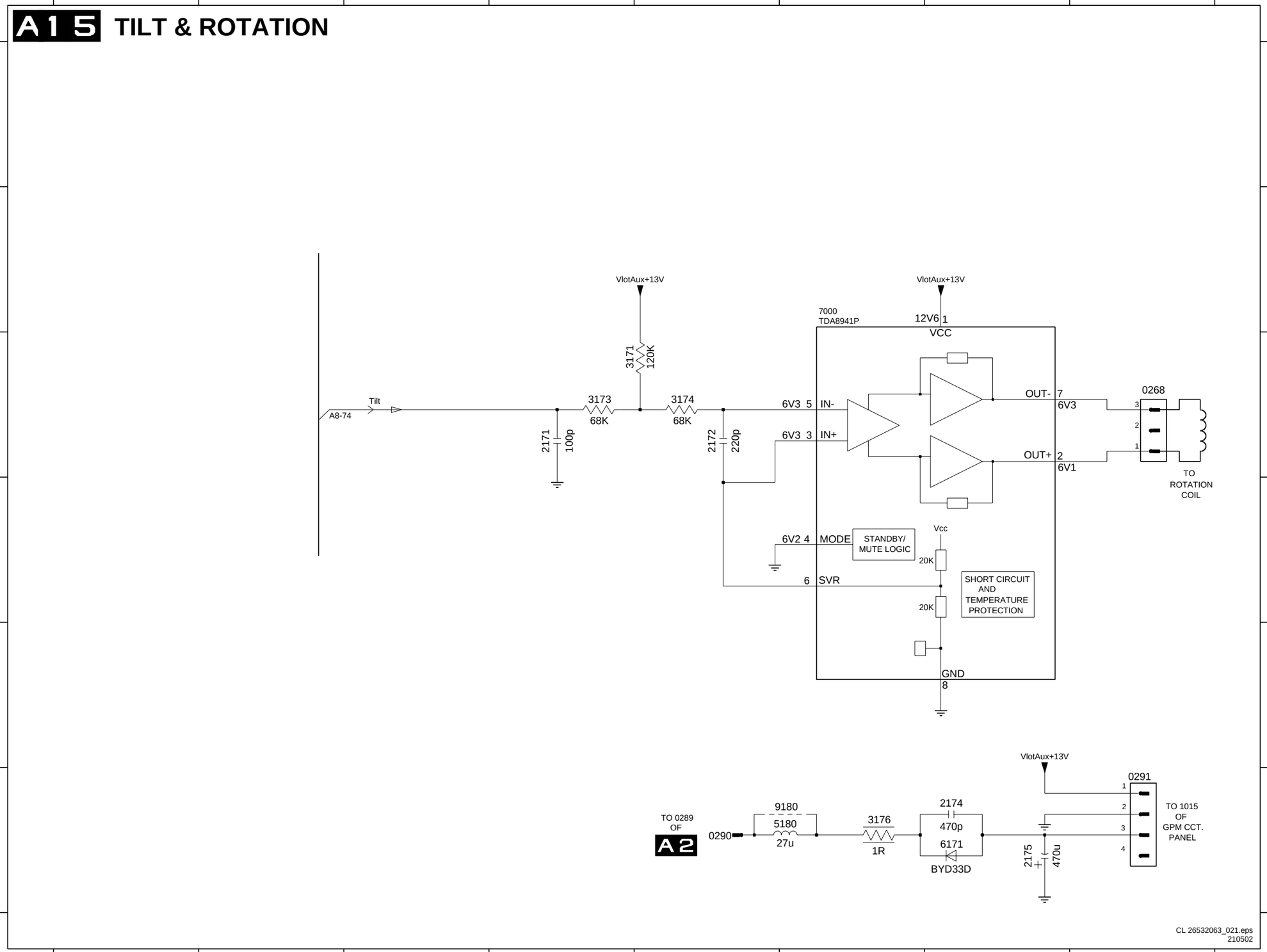

Layout Mono Carrier (Top Side)

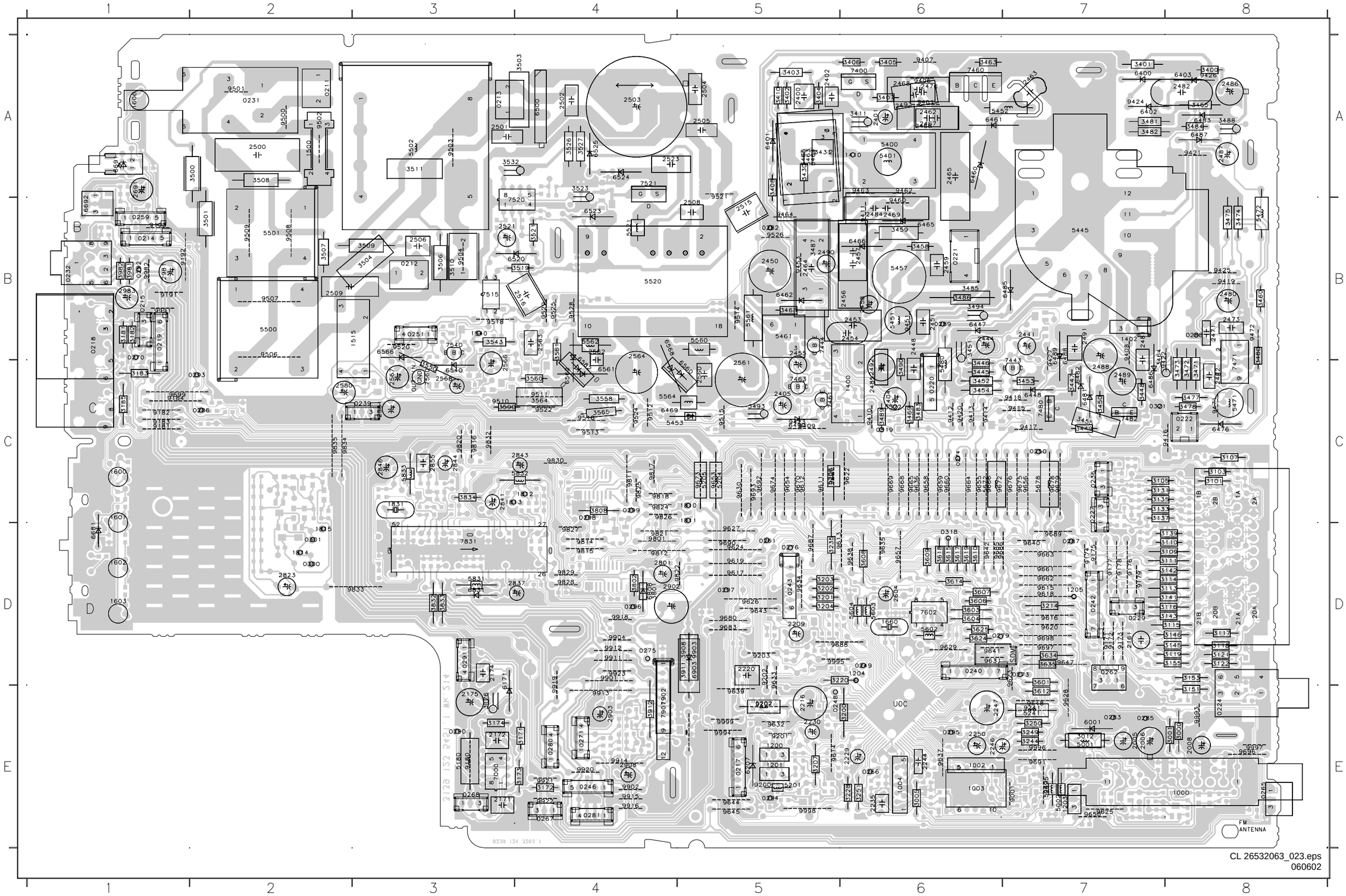

Layout Mono Carrier (Mapping Top Side)

0211	A2	1813	C3	2902	D4	3475	B8	5521	B4	9206	C5	9654	C5
0212	B3	1814	D2	2903	E4	3477	C8	5560	B5	9207	E5	9655	C6
0213	A3	1815	D2	2908	E4	3478	C8	5561	B5	9241	E7	9656	C7
0214	B1	1831	C3	2981	B1	3480	B8	5562	B4	9406	A6	9657	D6
0215	B1	2005	E7	2983	B1	3481	A7	5564	C4	9407	A6	9658	C6
0217	E5	2006	E7	3000	E8	3482	A7	5602	D6	9408	B7	9659	C6
0218	B1	2008	E8	3001	E8	3483	C6	5603	D6	9409	C5	9660	C6
0219	B1	2161	D7	3005	E6	3484	A8	5604	D6	9410	C6	9661	D7
0220	C6	2171	E3	3012	E7	3485	B6	5672	C6	9411	B6	9662	D7
0221	B6	2172	E3	3101	C8	3486	B6	5678	C7	9412	C6	9663	D7
0222	C8	2174	D3	3103	C8	3487	B5	5831	D3	9413	C6	9664	C6
0224	E8	2175	E3	3105	C7	3488	A8	5832	C4	9414	C6	9665	C6
0227	C7	2209	D5	3107	C8	3489	C6	5833	C3	9415	C7	9666	C6
0229	D7	2216	E5	3109	D8	3490	C6	6001	E7	9416	C8	9668	C6
0231	A2	2220	D5	3110	D8	3493	C5	6171	D3	9417	C7	9669	C6
0232	B1	2229	E6	3111	D8	3494	B6	6207	E5	9418	C7	9670	C5
0235	D8	2230	E5	3113	D8	3500	A2	6400	A7	9419	B8	9672	C6
0236	C7	2235	E6	3114	D8	3501	B2	6401	A5	9420	C6	9673	C5
0239	C3	2244	E6	3115	D8	3503	A4	6402	A7	9421	A8	9674	C5
0240	D6	2246	E6	3116	D8	3504	B3	6403	A8	9422	B7	9675	C7
0242	D7	2247	E6	3117	D8	3506	B3	6447	B6	9423	C5	9676	C7
0243	D5	2250	E6	3118	D8	3507	B2	6448	C7	9424	A7	9678	C7
0246	E4	2400	A5	3119	D8	3508	A2	6460	A6	9425	B8	9679	C7
0248	E5	2401	A6	3121	D8	3509	B3	6461	A6	9426	A8	9680	D5
0249	D6	2402	A5	3122	D8	3510	B3	6462	B5	9427	B7	9683	D5
0250	C7	2404	C6	3131	C7	3511	A3	6465	B6	9451	B6	9685	D6
0251	B3	2405	C5	3133	C7	3519	B4	6466	B6	9453	B5	9686	D6
0259	B1	2441	B7	3135	C7	3521	B4	6469	C4	9460	B6	9687	D5
0261	D5	2444	B6	3137	C7	3523	A4	6476	C8	9461	A6	9688	D5
0262	D7	2448	B6	3139	D8	3526	A4	6481	C7	9462	A6	9689	D7
0265	E8	2450	B5	3141	D8	3527	A4	6482	C7	9463	A6	9690	D5
0266	E6	2451	B6	3142	D8	3532	A3	6483	A8	9464	B5	9691	E7
0267	E4	2453	B6	3143	D8	3543	B3	6485	B7	9471	C8	9692	C5
0268	E3	2454	B6	3145	D8	3550	C3	6486	C7	9472	B8	9693	C5
0270	B1	2455	B5	3146	D8	3558	C4	6487	A8	9500	A2	9695	E7
0271	E4	2456	B6	3151	E8	3560	C4	6488	B7	9501	A2	9696	E8
0273	D7	2457	B6	3153	D8	3561	B4	6489	B7	9502	A2	9697	D7
0274	C6	2458	B6	3155	D8	3564	C4	6490	C5	9503	A3	9698	D7
0275	D4	2459	B6	3171	E4	3565	C4	6500	A4	9504	B3	9699	C1
0276	D5	2462	A6	3172	E4	3590	C3	6520	B4	9506	B2	9801	D4
0277	B1	2463	A7	3173	E4	3601	D7	6523	B4	9507	B2	9811	C4
0279	D6	2464	B5	3174	E3	3603	D6	6524	A4	9508	B2	9812	D4
0280	E4	2465	A6	3176	E3	3604	D6	6525	A4	9509	B2	9814	D4
0281	E4	2466	A6	3181	B1	3606	D6	6540	C3	9510	C3	9815	D4
0282	B5	2467	A6	3182	B1	3607	D6	6560	C5	9511	C4	9816	C3
0283	E7	2468	A6	3183	C1	3608	D6	6561	C4	9512	C4	9817	C4
0285	E7	2469	B6	3185	C1	3609	D6	6562	C4	9513	C4	9818	C4
0286	C2	2470	A6	3200	E6	3610	D6	6566	B3	9514	B5	9820	C3
0287	D7	2471	B8	3201	D5	3612	E7	6568	B4	9515	C5	9821	D4
0288	B8	2472	C8	3202	D5	3614	D6	6582	C4	9516	C4	9822	D4
0289	B6	2473	B8	3203	D5	3615	D6	6681	D1	9518	B3	9824	C4
0290	E3	2480	B8	3204	D5	3617	D6	6691	A1	9520	B3	9825	C4
0291	D3	2481	B7	3207	E5	3618	D6	6692	B1	9521	A5	9826	C4
0292	B1	2482	A8	3214	D7	3619	D6	6808	D4	9522	C4	9827	D4
0293	C2	2484	B6	3220	D5	3624	D6	6831	D3	9524	C4	9828	D4
0294	E5	2485	C6	3228	E6	3625	D6	6903	D5	9525	B4	9829	D4
0295	E6	2486	A8	3235	D5	3634	D7	7000	E3	9526	B5	9830	C4
0296	D4	2487	A8	3244	E7	3635	D7	7400	A6	9528	B4	9832	C3
0297	D5	2488	C7	3249	E7	3801	D4	7443	C7	9529	B4	9833	D3
0298	C4	2489	C7	3250	E7	3802	D4	7444	B5	9611	C5	9834	C2
0299	C4	2490	B5	3251	E6	3808	C4	7460	A6	9612	C5	9835	C2
0300	D2	2491	B7	3400	A8	3832	D3	7461	C5	9613	D5	9901	D4
0301	D2	2492	C6	3401	A7	3833	D3	7463	C5	9614	E5	9902	E4
0318	D6	2493	A6	3402	A5	3834	C3	7471	C8	9615	D7	9903	D5
0319	C6	2500	A2	3403	A5	3908	D5	7480	C7	9616	D7	9904	D4
0321	C7	2501	A3	3404	A5	3911	D5	7482	C7	9617	D5	9905	E5
0322	C6	2502	A4	3405	A6	3912	E4	7515	B3	9618	D7	9911	D4
1000	E8	2503	A4	3406	A6	3981	B1	7520	B4	9619	D5	9912	D4
1002	E6	2504	A5	3407	A6	3982	B1	7521	A4	9620	D7	9913	E4
1003	E6	2505	A5	3408	A5	5001	E7	7540	B3	9622	C6	9914	E4
1004	E6	2506	B3	3410	A5	5002	E7	7560	C3	9623	D7	9915	E4
1200	E5	2508	B5	3411	A6	5180	E3	7602	D6	9624	D5	9916	E4
1201	E5	2509	B2	3430	A5	5201	E5	7831	D3	9625	E7	9918	D4
1203	E7	2515	B5	3431	A5	5202	E5	7901	E4	9626	D5	9919	D4
1204	D6	2516	B4	3445	C6	5204	C5	7902	E4	9627	D5	9920	E4
1205	D7	2521	B3	3446	C6	5205	C5	9001	E7	9628	E7	9921	E4
1400	C6	2523	A4	3447	C7	5206	C5	9171	D7	9629	D6	9922	E4
1402	B7	2560	C5	3448	C7	5241	E7	9172	D7	9630	C5	9923	D4
1410	A6	2561	C5	3449	C7	5242	E7	9173	D7	9631	D6	9982	B1
1500	A2	2562	B4	3450	C7	5400	A6	9174	D7	9632	E5	9991	B1
1515	B3	2563	B4	3451	B6	5401	A6	9175	D7	9633	D5	9993	E8
1530	B5	2564	B4	3452	C6	5445	B7	9176	D7	9634	D5	9994	E5
1531	B5	2566	C3	3453	C7	5451	B6	9177	D7	9635	D6	9995	D5
1532	B4	2567	C3	3454	C6	5452	A6	9178	D7	9636	C6	9996	E7
1533	B4	2568	C3	3455	C7	5453	C4	9179	D7	9637	E6	9997	E8
1534	B4	2580	C2	3458	B6	5457	B6	9180	E3	9638	D6	9998	E5
1535	B4	2581	C3	3459	B6	5461	B5	9181	C1	9639	E5	9999	E5
1540	B3	2604	D6	3460	B8	5463	A5	9182	C1	9640	D7		
1600	C1	2691	A1	3463	A6	5464	A5	9183	C1	9641	D6		
1601	C1	2801	D4	3464	B7	5465	A5	9184	C1	9642	D6		
1602	D1	2823	D2	3465	A8	5471	C8	9191	B1	9643	D5		
1603	D1	2837	D4	3468	B5	5472	B8	9192	B1	9644	E5		
1606	A1	2841	C3	3469	C6	5480	C6	9193	B1	9645	E5		
1660	D6	2843	C4	3471	C8	5500	B2	9200	E5	9647	D7		
1810	C5	2844	C3	3472	C8	5501	B2	9201	E5	9648	E7		
1811	C5	2846	C3	3473	C8	5502	A3	9202	D5	9650	E7		
1812	C4	2855	C3	3474	B8	5520	B4	9203	D5	9653	C5		

CL 26532063_23m.eps
060602

Layout Mono Carrier (Mapping Bottom Side)

2001	A8	2475	D8	3108	C8	3684	B1	4807	B4
2002	A8	2476	C7	3112	B7	3685	C2	4808	B4
2003	A7	2507	D4	3120	B8	3686	B1	4809	C4
2004	A7	2520	D4	3132	C7	3687	C1	4811	B4
2007	A7	2522	E4	3134	C7	3688	C1	4812	B4
2009	A6	2525	D4	3136	C7	3689	C2	4813	B4
2010	A8	2526	D3	3138	C7	3691	E1	4814	C4
2101	C8	2527	E4	3140	B7	3692	E1	4815	B4
2102	C7	2528	D4	3144	B8	3693	E1	4820	C2
2103	C7	2540	C3	3152	A8	3694	E1	4832	C3
2104	C8	2541	D3	3154	B8	3695	C2	4834	C3
2105	C8	2569	C5	3184	C1	3803	B4	4835	C3
2106	C7	2590	C3	3186	C1	3804	C4	4836	C3
2107	C8	2601	B6	3206	B5	3805	B4	4837	B2
2108	C7	2602	B6	3208	A5	3806	C4	4861	B3
2109	C7	2606	B7	3209	A5	3807	C4	4901	A4
2110	C8	2607	B6	3212	A5	3809	B4	4902	A4
2111	C8	2608	B6	3213	A5	3810	B4	4903	A4
2112	C7	2609	B6	3217	B5	3811	C2	4904	A4
2113	B8	2611	B6	3218	B5	3812	C2	4905	B4
2114	B7	2612	B7	3219	B5	3813	C2	4906	A4
2115	B8	2613	B6	3223	B5	3814	B2	4921	B4
2116	B7	2615	B6	3224	B5	3815	C2	4982	D1
2117	B8	2616	B6	3225	B5	3831	B3	4991	A7
2118	B8	2618	B6	3226	B5	3835	C3	5003	A6
2119	B8	2619	B6	3229	A5	3837	C4	5450	C8
2120	B8	2692	E1	3230	A6	3839	C4	5835	C3
2131	C8	2693	D2	3231	A5	3840	C3	6002	A8
2132	C7	2694	E1	3232	A6	3841	C3	6003	A8
2133	C7	2695	E1	3233	A8	3842	C3	6004	A7
2134	C8	2696	D1	3234	A6	3843	C3	6005	A7
2135	C7	2802	C4	3236	A8	3844	C4	6101	B8
2136	C7	2803	C3	3237	A7	3845	C4	6102	B8
2137	C8	2804	B4	3238	A7	3849	C3	6103	B8
2138	C7	2805	B4	3239	A7	3861	B3	6104	B8
2139	C7	2811	C2	3240	A8	3901	B4	6105	B8
2140	C8	2813	B2	3241	A6	3902	A4	6106	B8
2141	B7	2814	B2	3242	B5	3903	A4	6131	B8
2142	B7	2815	B2	3245	A6	3904	A4	6132	B8
2143	B7	2816	C2	3246	A5	3905	A4	6181	C1
2144	B7	2817	C2	3247	C6	3906	A4	6201	B5
2145	B8	2818	C2	3248	A5	3907	A4	6202	B5
2146	B8	2819	C2	3254	A6	3909	A4	6206	B5
2147	B7	2820	C2	3256	C6	3910	A4	6445	D7
2151	A7	2821	B2	3257	A6	3921	A4	6449	C7
2152	A8	2822	B2	3258	A7	3922	A4	6452	C6
2153	B8	2824	B5	3259	B6	3923	A4	6453	C6
2154	B7	2831	B3	3261	A7	4001	A7	6463	C6
2155	A8	2832	B3	3270	A5	4002	A6	6467	C5
2156	A8	2833	B3	3441	D7	4003	A7	6468	C5
2181	D1	2834	B3	3442	D7	4004	A6	6470	D7
2182	D1	2835	B3	3443	C6	4005	A7	6522	D3
2183	C1	2836	B3	3456	C7	4006	A7	6526	E4
2184	C2	2838	B3	3457	C6	4007	A7	6541	D3
2185	D1	2839	B3	3470	C8	4011	A6	6563	D4
2186	C1	2840	B3	3479	C8	4012	A6	6564	D4
2201	A5	2842	B3	3491	C5	4101	C8	6565	C4
2202	B5	2845	B3	3492	C5	4102	C8	6567	D4
2203	A5	2847	C3	3495	C8	4103	C7	6569	C3
2204	B6	2848	B3	3496	C8	4104	C7	6570	C3
2205	A6	2849	B4	3497	C7	4105	B7	6580	C3
2206	A5	2850	B4	3498	C8	4106	C7	6801	C2
2207	A5	2851	B4	3499	C5	4151	A8	6802	C2
2208	A5	2852	C4	3520	D4	4152	B7	6803	C2
2210	B5	2853	B4	3522	D4	4171	B8	6804	C2
2211	A5	2854	C4	3524	E4	4203	A6	6805	C2
2213	B5	2856	C3	3525	E4	4204	A5	6806	C2
2214	B5	2857	C3	3528	D3	4205	B5	6807	C2
2215	B5	2858	C3	3529	D4	4206	B5	6901	A4
2217	A5	2859	C3	3530	E4	4207	B5	7001	A7
2219	A6	2860	C3	3531	D4	4209	A5	7002	A6
2221	B5	2861	B3	3541	D3	4210	A5	7101	B7
2222	A7	2862	B3	3542	D3	4211	A5	7131	B7
2223	A7	2870	C4	3544	D3	4212	A6	7200	A6
2225	A6	2871	C3	3545	D3	4213	A6	7201	A5
2226	A6	2887	B4	3548	C3	4214	C5	7204	B5
2227	A6	2894	B3	3552	D3	4218	A6	7206	A5
2228	A6	2895	B3	3557	C4	4219	B5	7209	A8
2233	B6	2896	C3	3562	D4	4401	C7	7210	A7
2234	A7	2897	B3	3563	C4	4402	E8	7441	D7
2236	A7	2898	B3	3566	C3	4430	C5	7450	C6
2237	A7	2901	B4	3567	D3	4470	D8	7462	C5
2238	A7	2904	A4	3568	D3	4500	C4	7522	D4
2239	A7	2905	A4	3569	D3	4601	B6	7541	D3
2240	A7	2906	A4	3570	D4	4602	B6	7542	C3
2241	A6	2907	A4	3580	C2	4603	B6	7561	C4
2242	A6	2910	A4	3594	D3	4604	A5	7562	C4
2243	A6	2911	A4	3595	D5	4608	A8	7564	C3
2245	A5	2947	A4	3596	D5	4609	A8	7580	C3
2248	A7	2948	A4	3605	C6	4613	B5	7606	B7
2249	A6	2949	A4	3611	B6	4614	A5	7801	C4
2252	A7	2950	A4	3622	B7	4615	B6	7802	B4
2253	A7	2982	D1	3623	B6	4616	B6	7803	C4
2254	A7	2984	D1	3626	B6	4617	A6	7804	B4
2255	A5	3002	A8	3627	B6	4618	A5	7805	B2
2260	B5	3003	A8	3628	B6	4619	A6	7806	B2
2415	D5	3004	A8	3629	B6	4622	A7	7807	C2
2420	C5	3006	A7	3630	B6	4623	A7	7834	C3
2421	C6	3007	A7	3632	B6	4691	D1	7835	C3
2422	C6	3008	A7	3633	B6	4692	C2	7903	A5
2423	C5	3009	A6	3636	A7	4693	C2		
2443	C6	3010	A7	3637	B5	4694	B1		
2452	C8	3011	A7	3638	A5	4695	E1		
2460	C5	3102	C7	3681	B1	4696	C1		
2461	C6	3104	C8	3682	C1	4805	B4		
2474	D8	3106	C7	3683	C1	4806	B4		

CL 26532063_22m.eps
060602

Layout Mono Carrier (Overview Bottom Side)

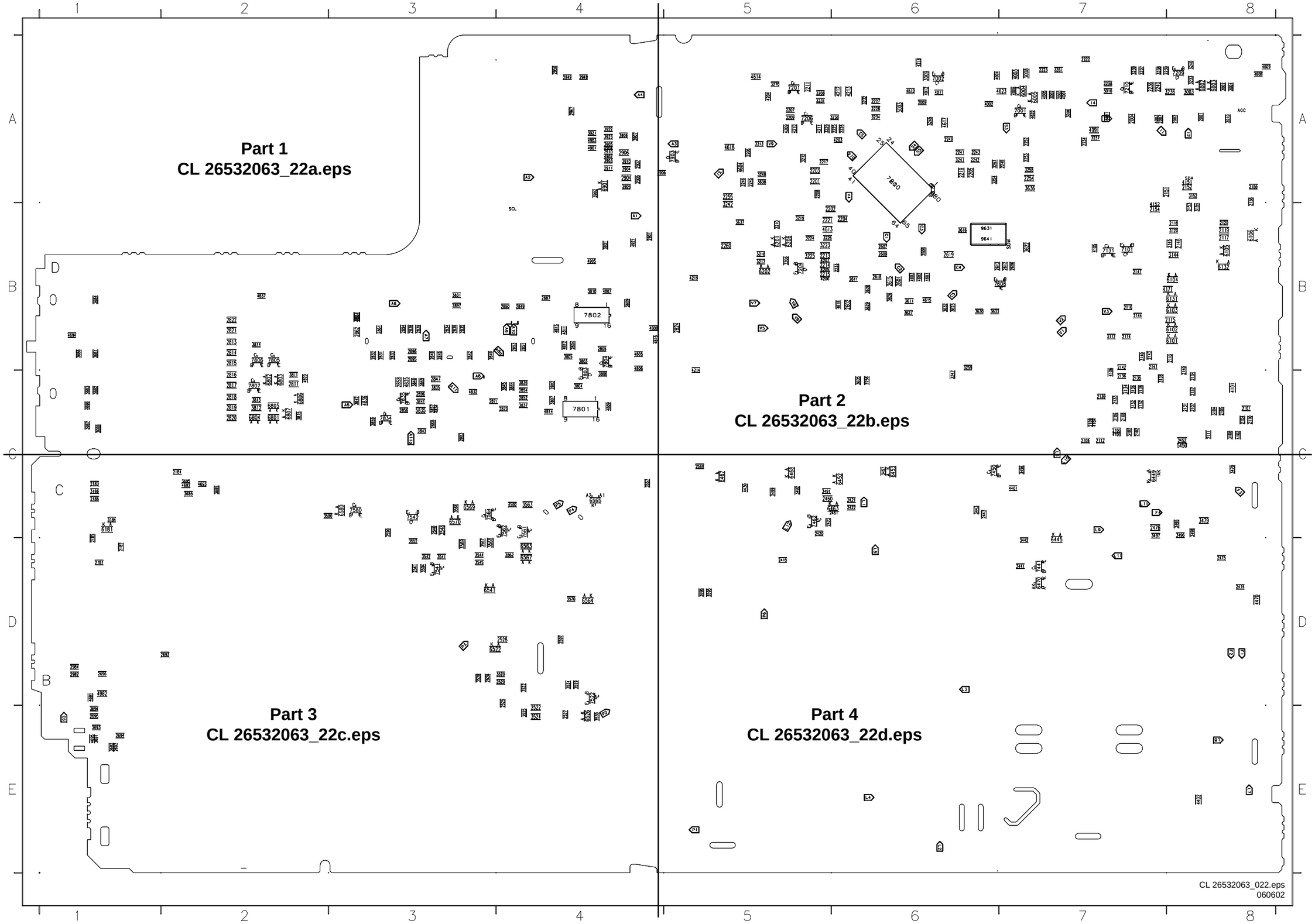

Layout Mono Carrier (Part 1 Bottom Side)

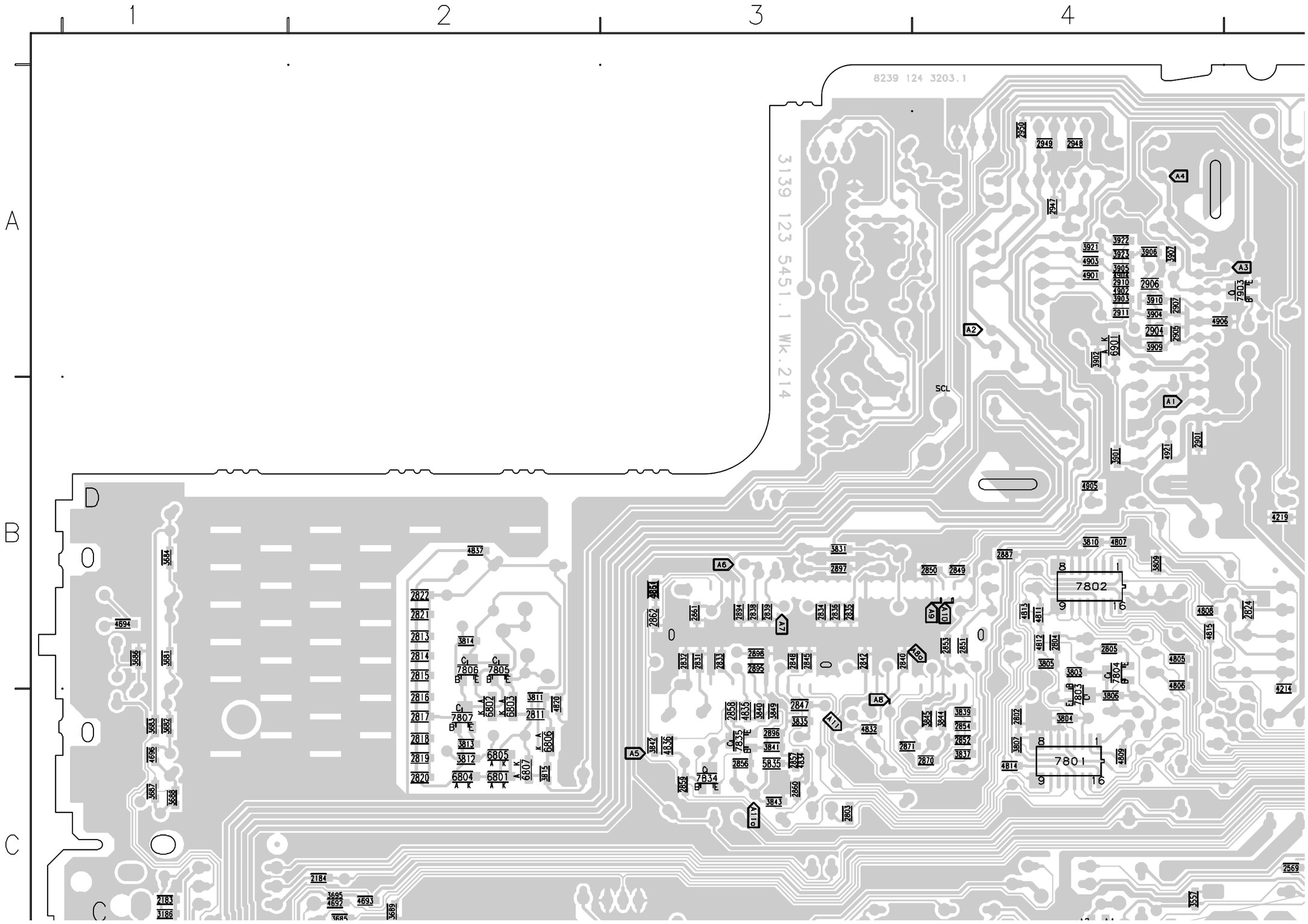

CL 26532063_22a.eps
060602

Layout Mono Carrier (Part 2 Bottom Side)

Layout Mono Carrier (Part 3 Bottom Side)

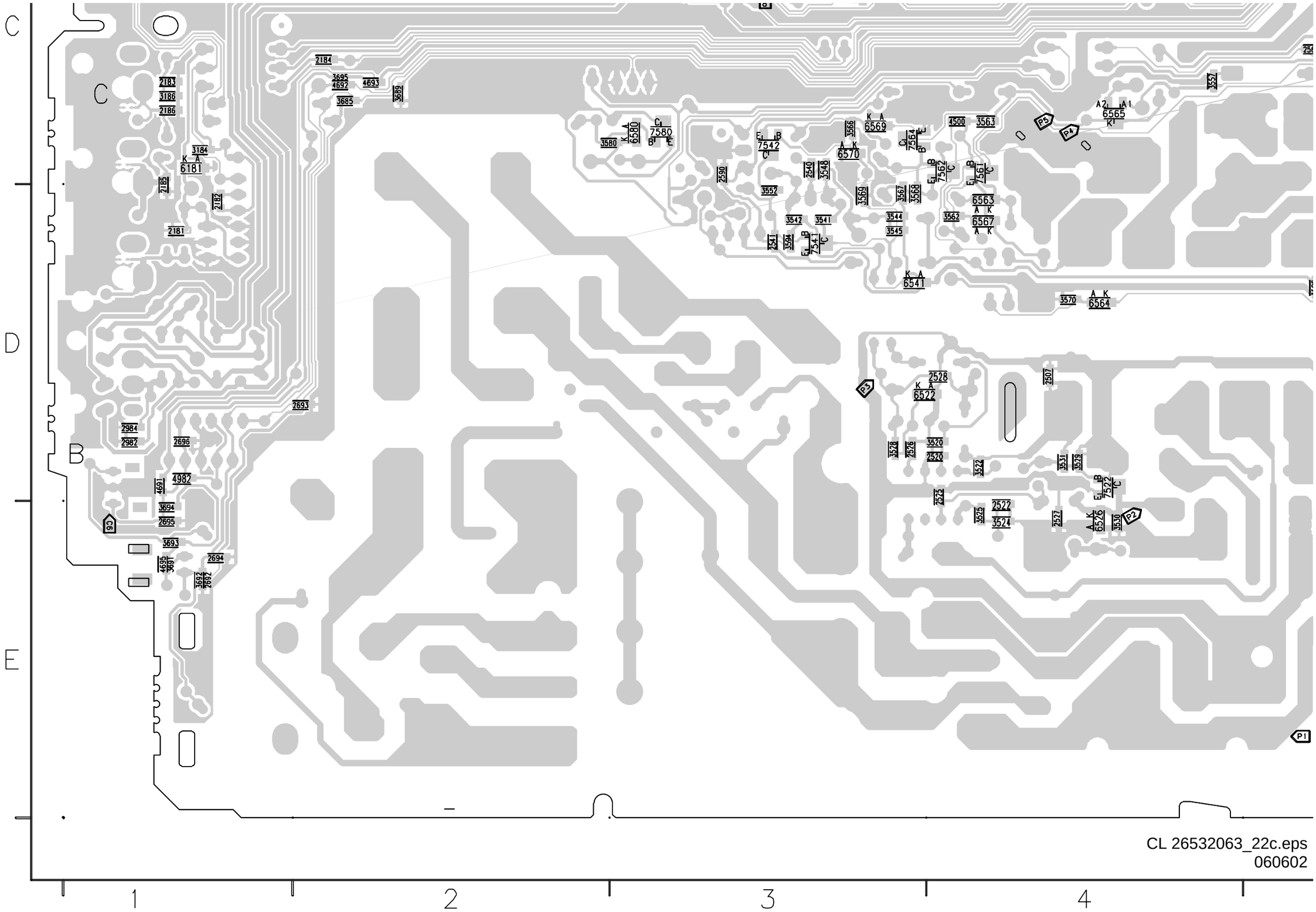

CL 26532063_22c.eps
060602

Layout Mono Carrier (Part 4 Bottom Side)

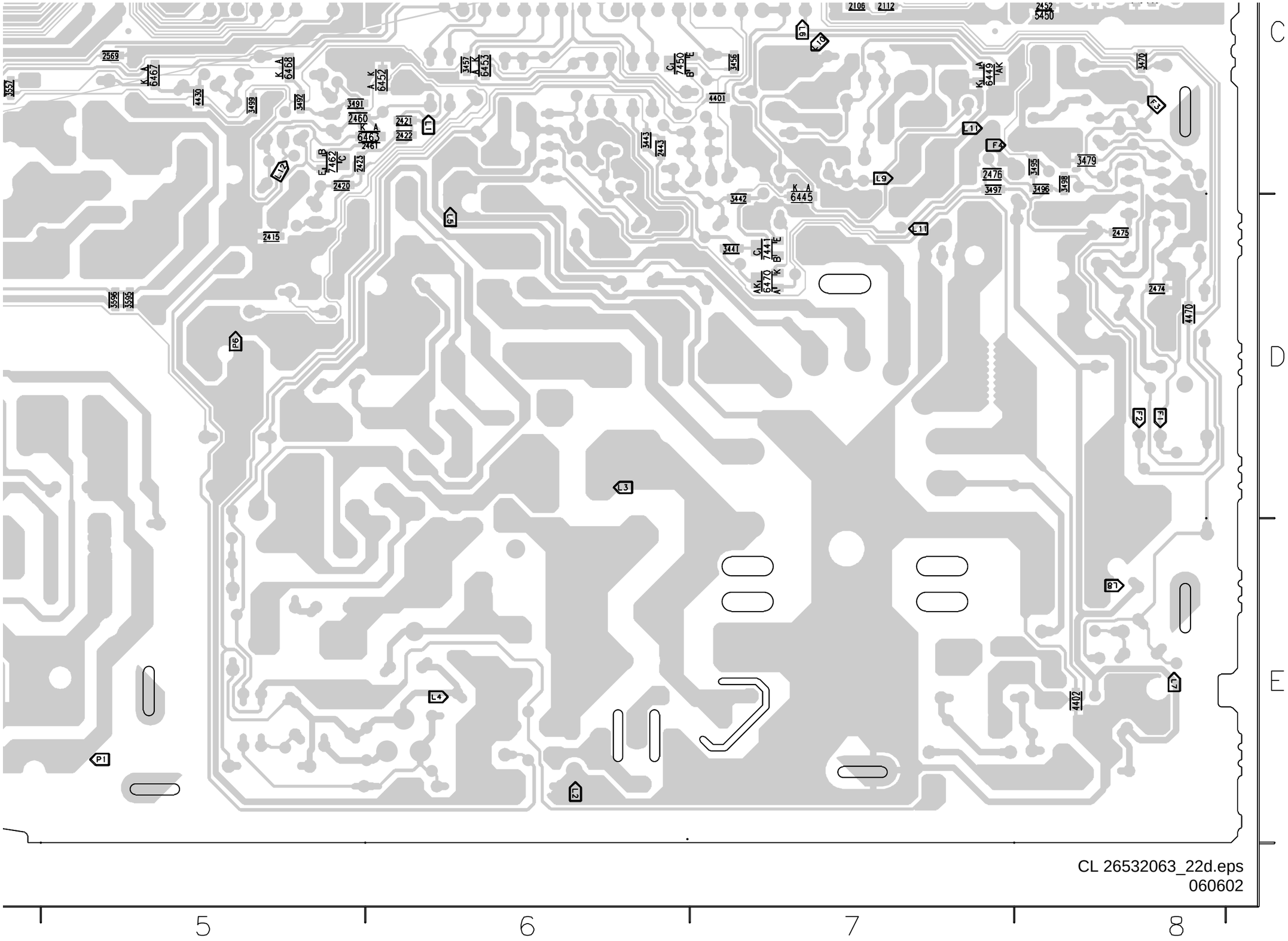

CRT Panel

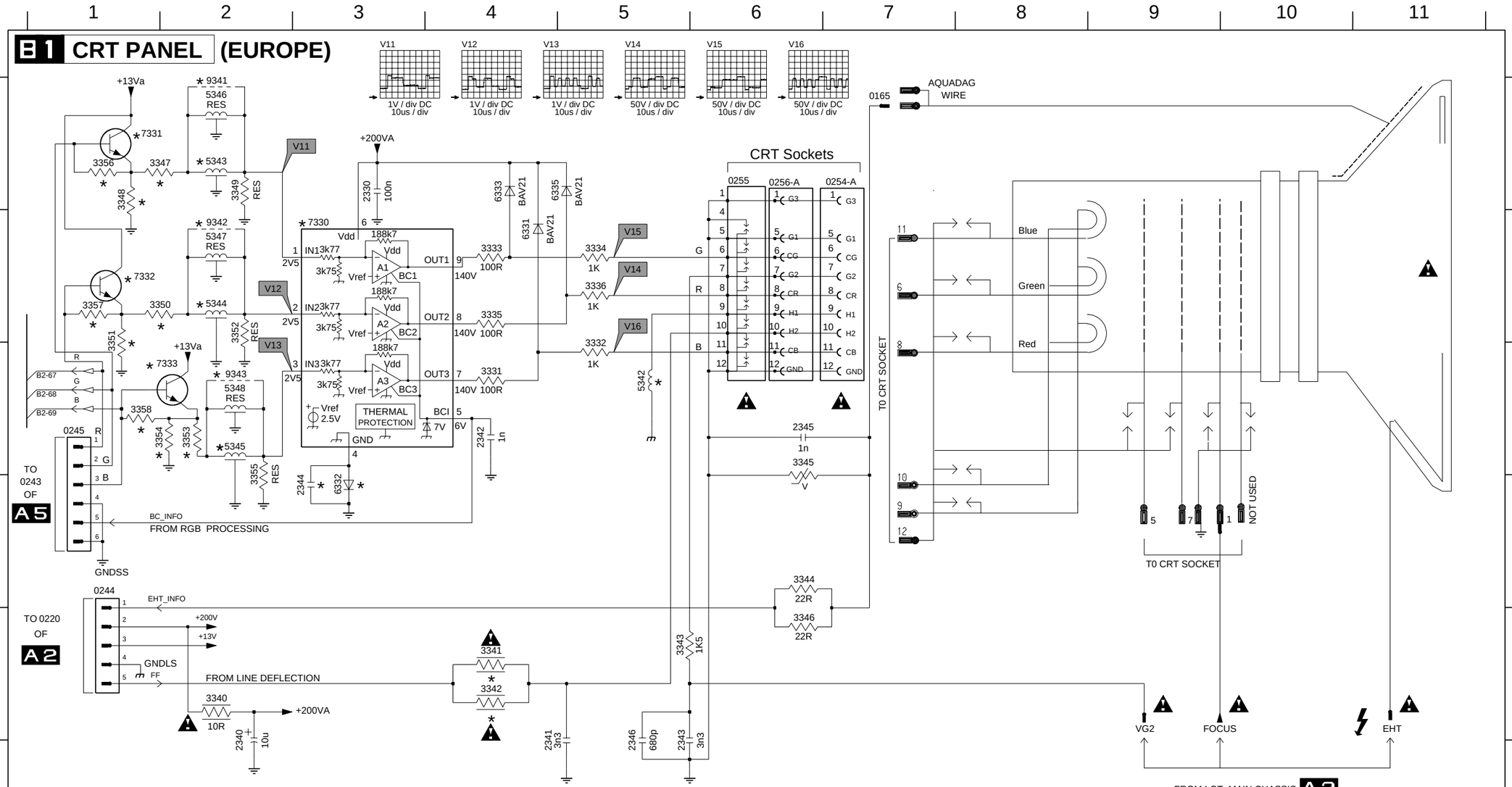

Diversity Table

ITEM	REGION TUBE (EUROPE)							
	21/25RF	29SF	28BLD/BLS/32WS(O)	29RF(I)	28/32WS(I)	32W(TH)(O)	28/32WS(TH)(I)	NO SVM SETS
2344	100n	100n	100n	JMP	JMP	100n	JMP	100n
3347	JMP	JMP	JMP	1K	1K	JMP	1K	JMP
3348	---	---	---	1K	1K	---	1K	---
3350	JMP	JMP	JMP	1K	1K	JMP	1K	JMP
3351	---	---	---	1K	1K	---	1K	---
3353	JMP	JMP	JMP	1K	1K	JMP	1K	JMP
3354	---	---	---	1K	1K	---	1K	---
3356	JMP	JMP	JMP	---	---	JMP	---	JMP
3357	JMP	JMP	JMP	---	---	JMP	---	JMP
3358	JMP	JMP	JMP	---	---	JMP	---	JMP
5343	---	---	---	SDL-4893	SDL-4893	---	SDL-4893	---
5344	---	---	---	SDL-4893	SDL-4893	---	SDL-4893	---
5345	---	---	---	SDL-4893	SDL-4893	---	SDL-4893	---
6332	BAS316	BAS316	BAS316	---	---	BAS316	---	BAS316
7330	TDA6107	TDA6107	TDA6107	TDA6108	TDA6108	TDA6107	TDA6108	TDA6107
7331	---	---	---	BC847B	BC847B	---	BC847B	---
7332	---	---	---	BC847B	BC847B	---	BC847B	---
7333	---	---	---	BC847B	BC847B	---	BC847B	---
9341	JMP	JMP	JMP	---	---	JMP	---	JMP
9342	JMP	JMP	JMP	---	---	JMP	---	JMP
9343	JMP	JMP	JMP	---	---	JMP	---	JMP

Diversity Table

ITEM	REGION TUBE													
	EU PH NO EW 21FSQ	EU PH EW 28" BLD	EU PH EW 28"BLS	EU PH EW 25BLD	EU PH EW 25BLS	EU PH EW 29SF	EU PH EW 24" WS BLD	EU SGMK EW 29" RF	EU PH EW 32" WS BLS	EU PH EW 28" WS BLD	EU SGMK EW 25" RF	EU MATJ EW 21" RF	EU THCF EW 32WS	EU THCF EW 28WS
3341	1R	1R	1R	1R	1R	1R	1R	1R	1R8	1R5	1R	1K5	1R5	1R5
3342	1R	1R	1R	1R	1R	1R	1R	1R	1R8	1R5	1R	---	1R5	1R5
5342	22u	15u	22u	15u	22u	18u	22u	3u9	18u	22u	3u9	100MHZ 50R	JMP	JMP

MODEL	L2K2				
REGION	EU				
TUBE					
SET	29RF	21RF	28WR	32WR	32WR
2343	--	2KV 3N3	2KV 2N2	---	---
2346	2KV 1N2	---	---	2KV 470P	---
3344	22R	22R	33R	33R	33R
3346	22R	22R	33R	33R	33R
5342	LAL04 3U9	LAL04 22U	LAL04 22U	LAL04 22U	LAL04 22U

CL 26532063_020.eps
060602

VG2 E9
0165 A7
0244 D1
0245 C1
0254-A A7
0255 A6
0256-A A6
2330 A3
2340 F2
2341 F4
2342 C4
2343 F5
2344 D3
2345 C6
2346 F5
3331 C4
3332 C5
3333 B4
3334 B5
3335 B4
3336 B5
3340 E2
3341 E4
3342 E4
3343 E5
3344 D6
3345 C6
3346 E6
3347 A2
3348 A1
3349 A2
3350 B2
3351 B1
3352 B2
3353 C2
3354 C2
3355 C2
3356 A1
3357 B1
3358 C1
5342 C5
5343 A2
5344 B2
5345 C2
5346 A2
5347 B2
5348 C2
6331 B4
6332 D3
6333 A4
6335 A4
7330 B3
7331 A1
7332 B1
7333 C1
9341 A2
9342 B2
9343 C2

SCAVEM Panel

Diversity Table B2

Item	Description	21" Real flat	25" Real flat	29" Super flat	28" Blackline, FM radio	32" Wide screen, No FM radio	29" Real flat	28" Wide screen, FM radio	32" Wide screen, FM radio	21" Blackline	24" Wide screen	25" Blackline	28" Blackline, No FM radio	28" Wide screen, No FM radio
2365	22N 250V	X	X	X	X	X	X	X	X					
2366	100N 100V	X	X	X	X	X	X	X	X					
2367	47P 50V	X	X	X										
2367	56P 50V				X	X								
2367	150P 50V						X							
2367	180P 50V							X	X					
2368	22N 50v	X	X	X	X	X	X	X	X					
2372	5P6 50V	X	X	X	X	X								
2373	56P 50V							X	X					
2375	100P 50V	X	X	X	X	X								
2375	330P 50V							X	X					
2376	100N 25V						X	X	X					
2377	100N 25V						X	X	X					
3360	8K2 5W	X	X	X	X	X	X	X	X					
3361	680R													
3362	Fuse 10R	X	X	X	X	X	X	X	X					
3363	820R	X	X	X	X	X	X	X	X					
3364	1R8						X	X	X					
3364	3R3	X	X	X	X	X								
3368	2K7	X	X	X	X	X	X	X	X					
3369	10K	X	X	X	X	X	X	X	X					
3370	220R						X	X	X					
3370	330R	X	X	X	X	X								
3371	10K	X	X	X	X	X								
3371	4K7						X	X	X					
3373	220R						X	X	X					
3374	56K	X	X	X	X	X	X	X	X					
3375	150R							X	X					
3375	220R						X							
3375	470R	X	X	X	X	X								
3376	Jumper	X	X	X	X	X	X	X	X					
3377	10R						X							
3377	4R7							X	X					
3378	56K	X	X	X	X	X	X	X	X					
3379	10K	X	X	X	X	X								
3379	4K7						X	X	X					
3382	1K5	X	X	X	X	X	X	X	X					
3383	470R	X	X	X	X	X	X	X	X					
3384	820R	X	X	X	X	X	X	X	X					
3385	1R8						X	X	X					
3385	3R3	X	X	X	X	X								
3386	10K	X	X	X	X	X								
3386	4K7						X	X	X					
3387	470R	X	X	X	X	X	X	X	X					
3388	220R	X	X	X	X	X								
3389	220R	X	X	X	X	X								
3390	10R							X	X					
3390	33R	X	X	X	X	X	X							
3391	10R							X	X					
3391	33R	X	X	X	X	X	X							
3392	220R						X	X	X					
3393	4K7						X	X	X					
5360	5.6uH 10%	X	X	X	X	X	X	X	X					
5361	COIL													
5362	COIL													
6360	1N4148						X	X	X					
6361	BAS316						X	X	X					
6362	BAS316						X	X	X					
6364	BAS316						X	X	X					
6365	BAS316						X	X	X					
7360	BC547B	X	X	X	X	X	X	X	X					
7362	2SA1358	X	X	X	X	X	X	X	X					
7363	BC547B	X	X	X	X	X	X	X	X					
7365	2SC3421	X	X	X	X	X	X	X	X					
7366	BF423						X	X	X					
7367	BC557B	X	X	X	X	X	X	X	X					
9361	Wire													
9363	Wire	X	X	X	X	X	X	X	X					
9364	Wire	X	X	X	X	X	X	X	X					
9365	Wire	X	X	X	X	X								
9366	Wire	X	X	X	X	X								

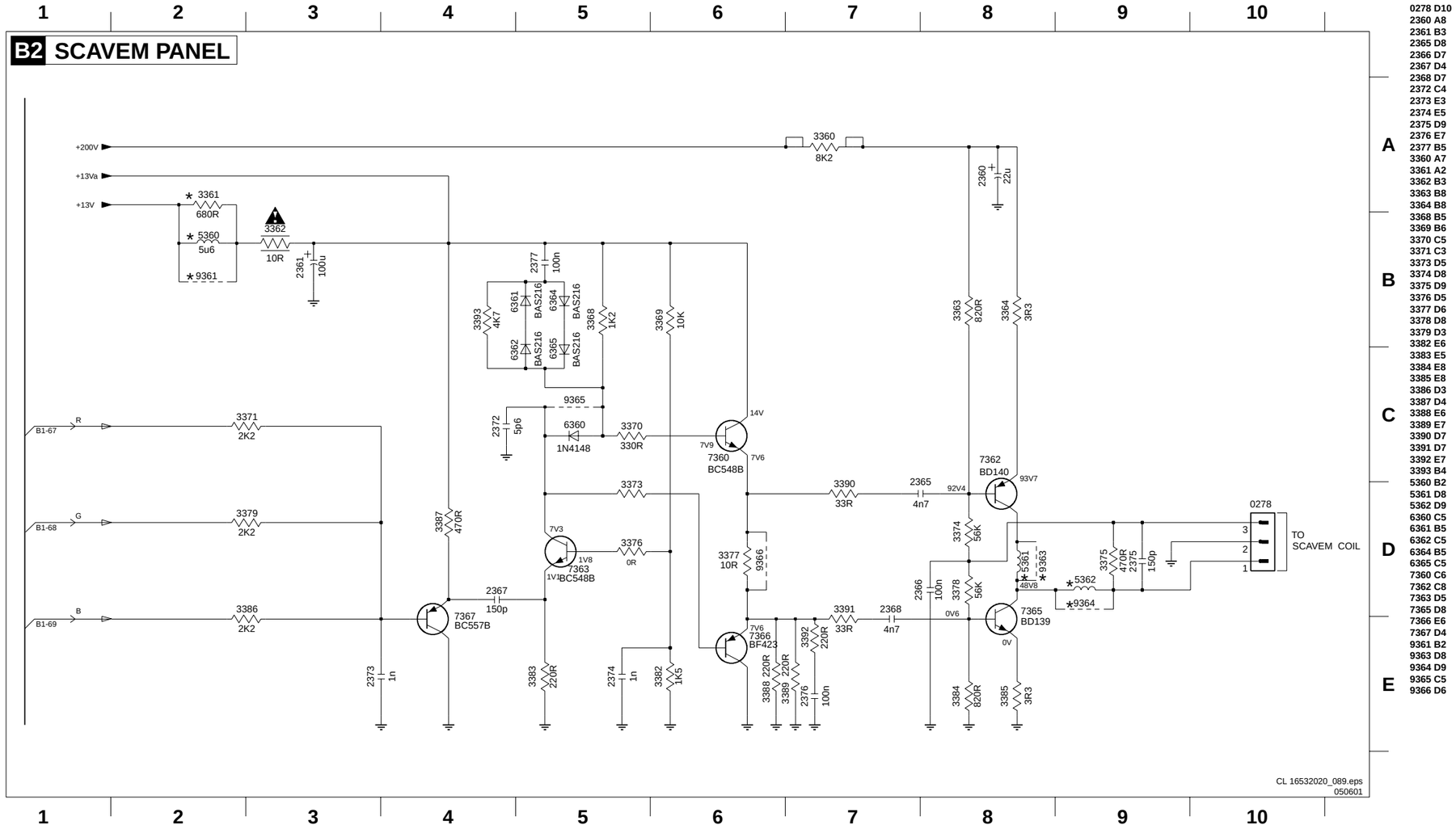

0278 D10
2360 A8
2361 B3
2365 D8
2366 D7
2367 D4
2368 D7
2372 C4
2373 E3
2374 E5
2375 D9
2376 E7
2377 B5
3360 A7
3361 A2
3362 B3
3363 B8
3364 B8
3368 B5
3369 B6
3370 C5
3371 C3
3373 D5
3374 D8
3375 D9
3376 D5
3377 D6
3378 D8
3379 D3
3382 E6
3383 E5
3384 E8
3385 E8
3386 D3
3387 D4
3388 E6
3389 E7
3390 D7
3391 D7
3392 E7
3393 B4
5360 B2
5361 D8
5362 D9
6360 C5
6361 B5
6362 C5
6364 B5
6365 C5
7360 C6
7362 C8
7363 D5
7365 D8
7366 E6
7367 D4
9361 B2
9363 D8
9364 D9
9365 C5
9366 D6

Layout CRT and SCAVEM Panel (Top Side)

VG2 A1
0165 A2
0244 A1
0245 A2
0254 A2
0255 A2
0256 A2
0278 A1
2330 A1
2340 A1
2341 A2
2343 A2
2345 A2
2346 A2
2360 A1
2361 A1
2365 A2
2366 A2
3331 A1
3332 A2
3333 A1
3334 A2
3335 A1
3336 A2
3340 A2
3341 A2
3342 A1
3343 A1
3344 A2
3345 A2
3346 A2
3360 A2
3361 A2
3362 A1
3363 A2
3364 A2
3374 A2
3375 A2
3377 A2
3385 A2
3388 A2
3389 A2
5342 A1
5343 A1
5344 A1
5345 A1
5346 A1
5347 A2
5348 A2
5360 A2
5361 A2
5362 A2
6331 A1
6333 A2
6335 A2
6360 A1
6362 A2
6364 A2
6365 A2
7330 A1
7360 A1
7362 A2
7363 A2
7365 A2
7366 A1
7367 A1
9311 A1
9312 A1
9341 A1
9342 A1
9343 A1
9361 A2
9363 A2
9364 A2
9365 A2
9366 A2

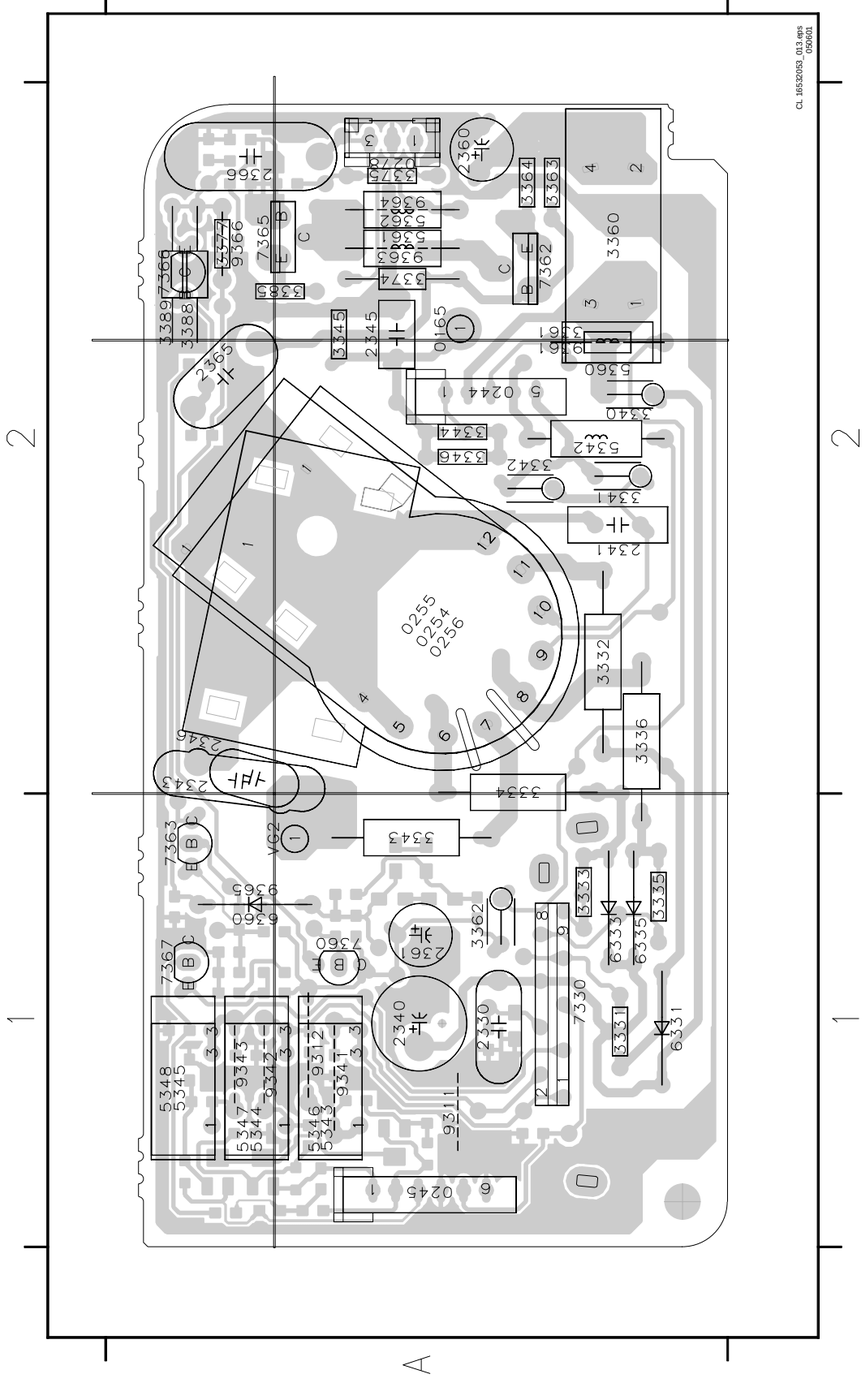

Layout CRT and SCAVEM (Bottom Side)

2342 A2
2344 A2
2367 A2
2368 A1
2372 A2
2373 A2
2374 A2
2375 A1
2376 A1
2377 A2
3347 A2
3348 A2
3349 A2
3350 A2
3351 A2
3352 A2
3353 A2
3354 A2
3355 A2
3356 A2
3357 A2
3358 A2
3368 A2
3369 A2
3370 A2
3371 A2
3373 A1
3376 A2
3378 A1
3379 A2
3382 A2
3383 A2
3384 A1
3386 A2
3387 A2
3390 A1
3391 A1
3392 A1
3393 A2
4311 A2
6332 A2
6361 A2
6362 A2
6364 A2
6365 A2
7331 A2
7332 A2
7333 A2

Side AV + HP Panel

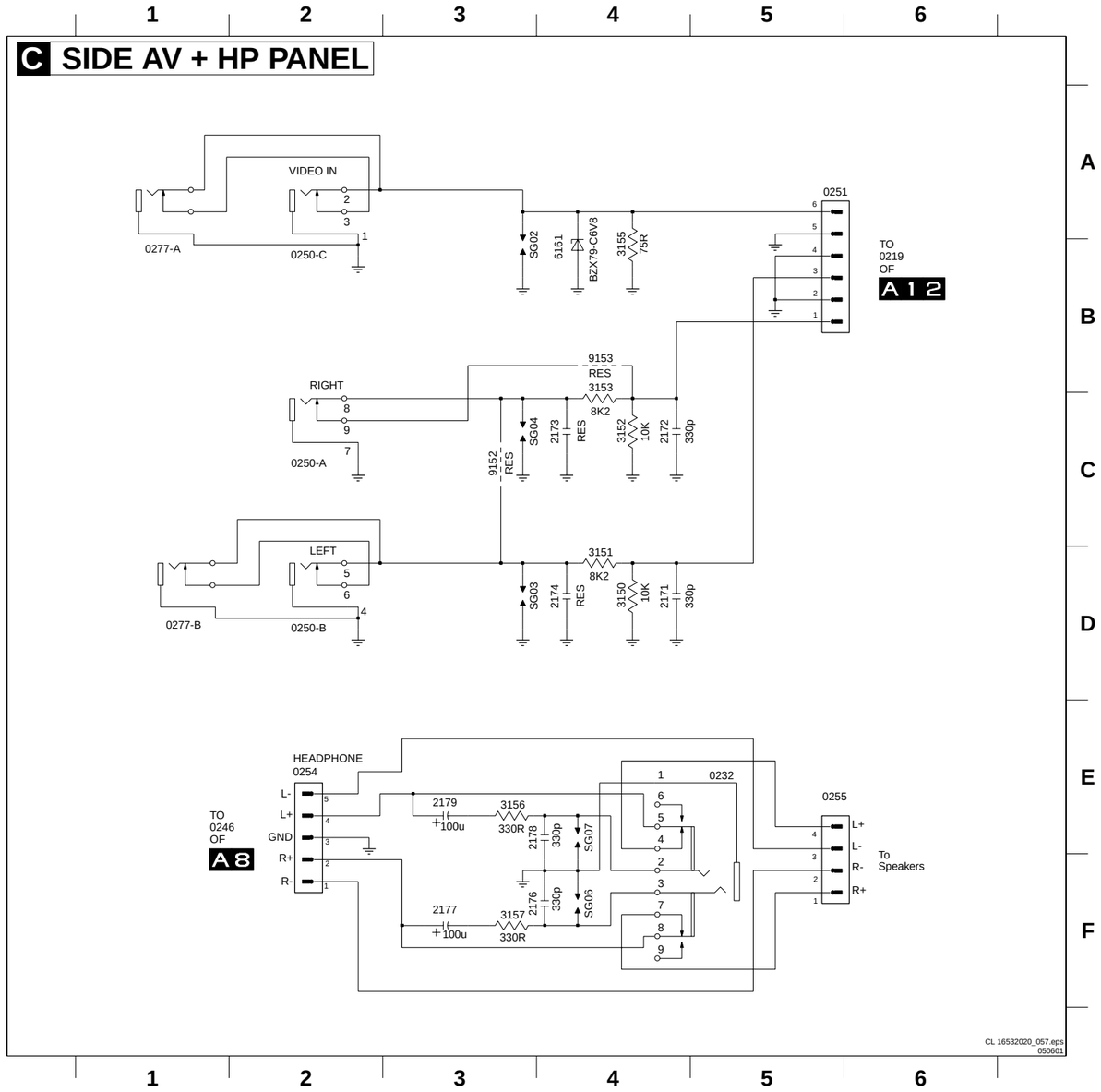

Layout Side AV + HP Panel (Top Side)

0232 E5
0250-A C2
0250-B D2
0250-C B2
0251 A5
0254 E2
0255 E5
0277-A B1
0277-B D1
2171 D4
2172 C4
2173 C4
2174 D4
2176 F3
2177 F3
2178 E3
2179 E3
3150 D4
3151 D4
3152 C4
3153 B4
3155 B4
3156 E3
3157 F3
6161 B4
9152 C3
9153 B4
SG02 B3
SG03 D3
SG04 C3
SG06 F4
SG07 E4

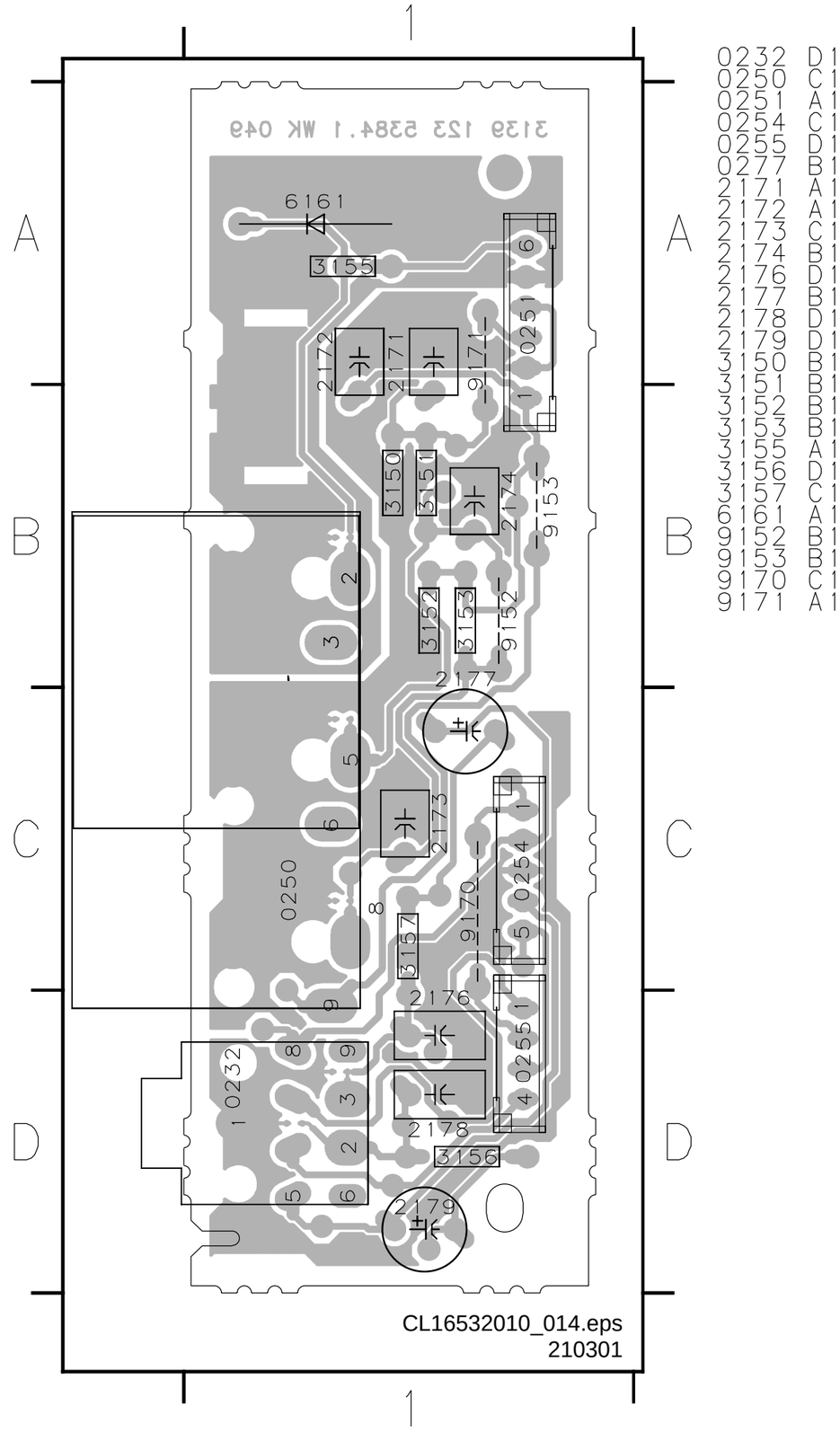

Side AV Panel + Headphone

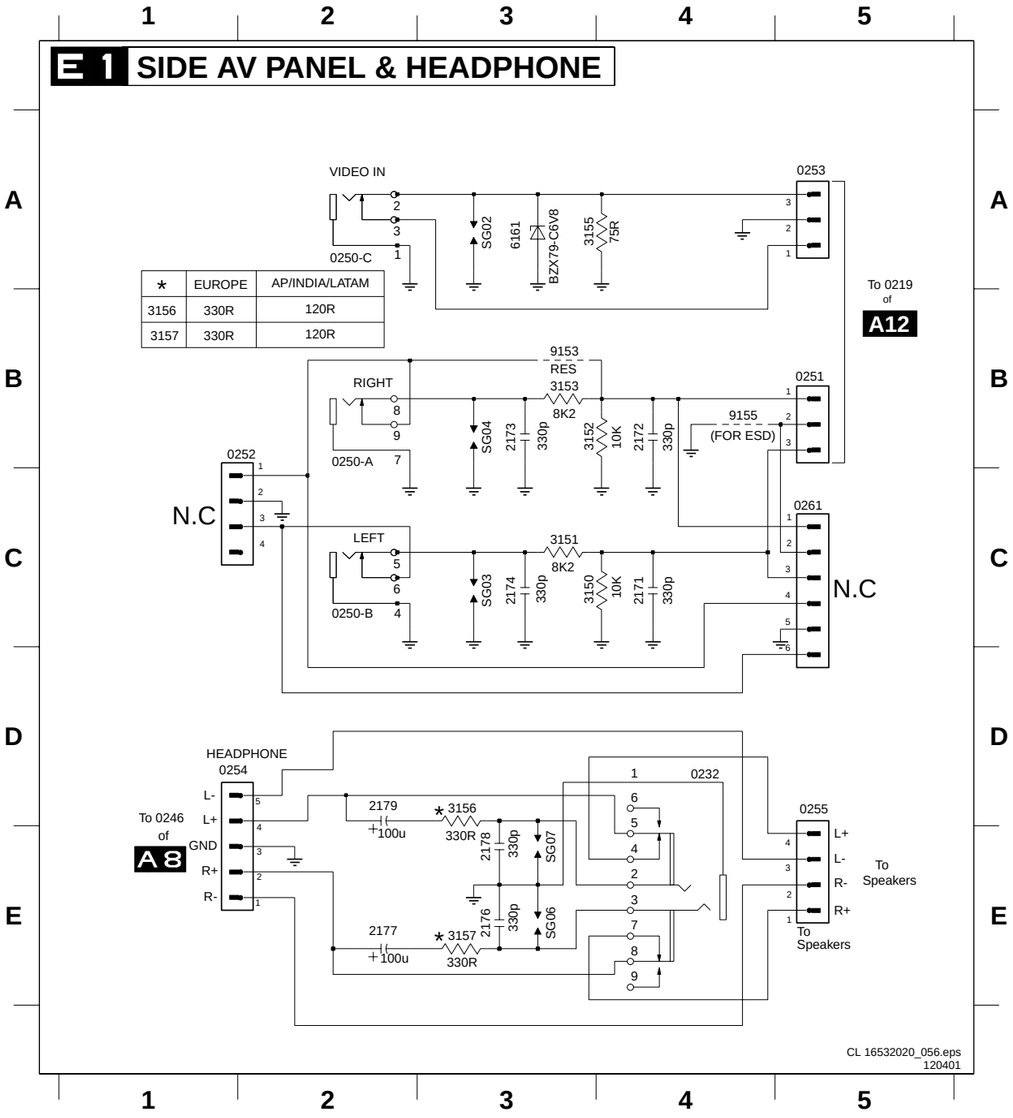

*	EUROPE	AP/INDIA/LATAM
3156	330R	120R
3157	330R	120R

0232 D4
0250-A B2
0250-B C2
0250-C A2
0251 B5
0252 B2
0253 A5
0254 D2
0255 D5
0261 C5
2171 C4
2172 B4
2173 B3
2174 C3
2176 E3
2177 E2
2178 E3
2179 D2
3150 C3
3151 C3
3152 B3
3153 B3
3155 A3
3156 D3
3157 E3
6161 A3
9153 B3
9155 B4
SG02 A3
SG03 C3
SG04 B3
SG06 E3
SG07 E3

Layout Side AV Panel + Headphone (Top Side)

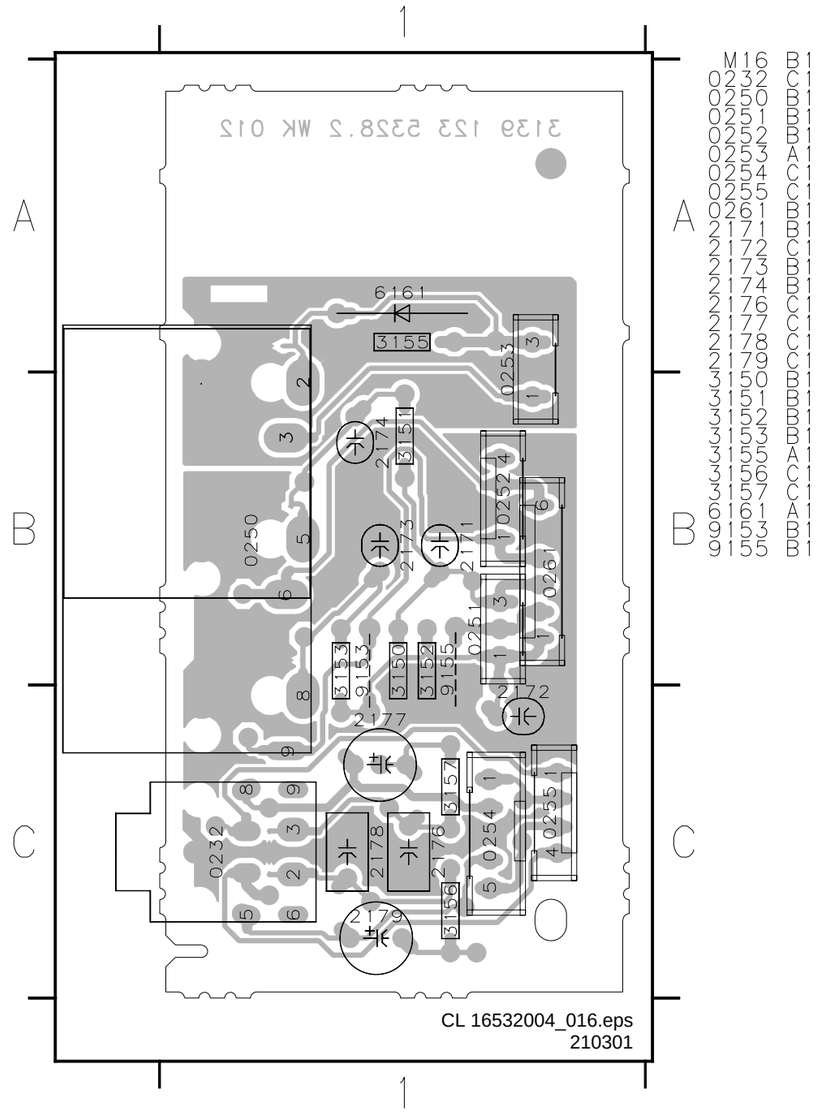

M16 B1
0232 C1
0250 B1
0251 B1
0252 B1
0253 A1
0254 C1
0255 C1
0261 B1
2171 B1
2172 C1
2173 B1
2174 B1
2176 C1
2177 C1
2178 C1
2179 C1
3150 B1
3151 B1
3152 B1
3153 B1
3155 A1
3156 C1
3157 C1
6161 A1
9153 B1
9155 B1

Front Interface Panel

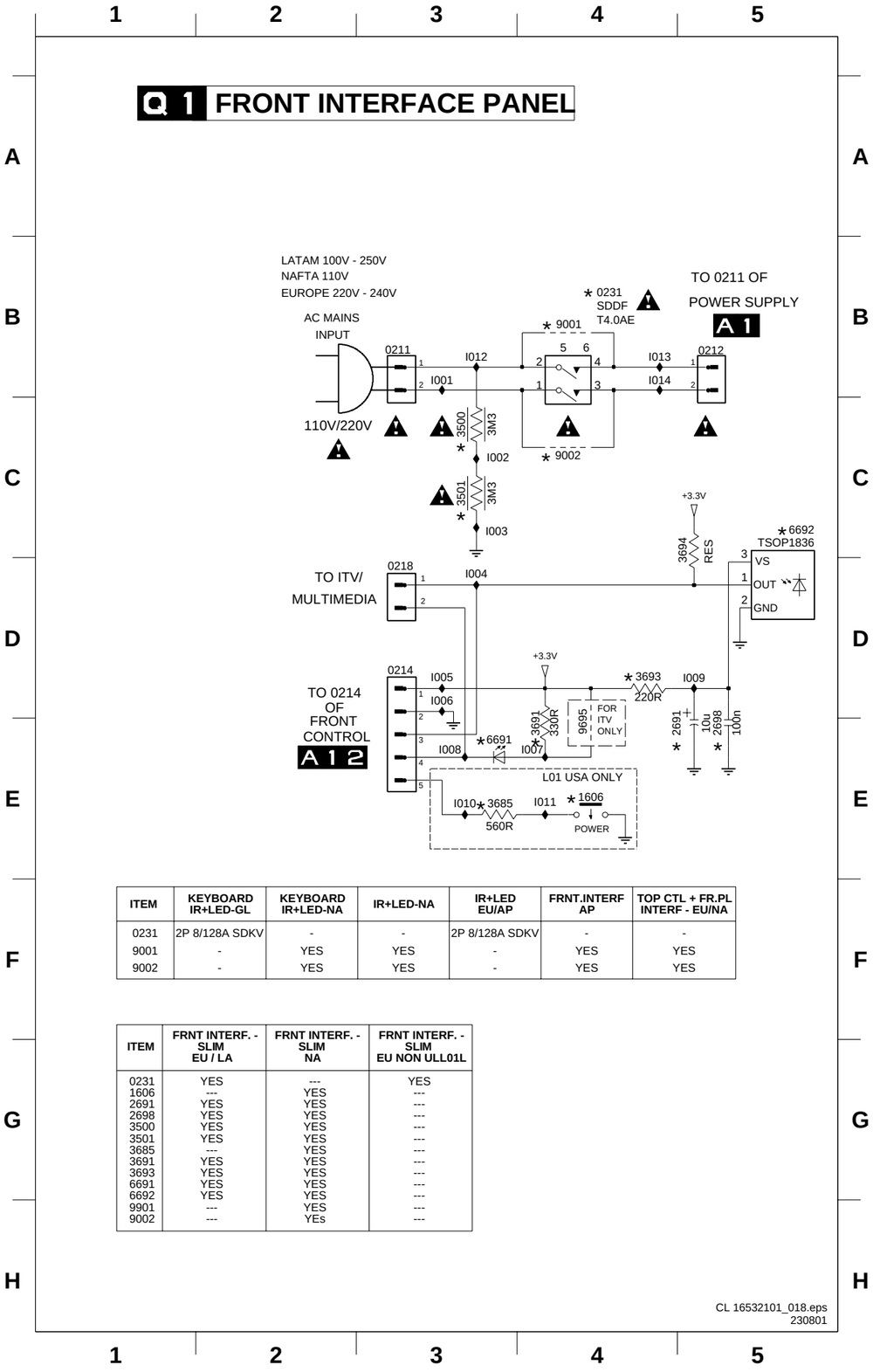

0211 B3
0212 B5
0214 D3
0218 D3
0231 B4
1606 E4
2691 E5
2698 E5
3500 C3
3501 C3
3685 E4
3691 E4
3693 D5
3694 C5
6691 E4
6692 C6
9001 B4
9002 C4
9695 E4
I001 B3
I002 C4
I003 C4
I004 D4
I005 D3
I006 D3
I007 E4
I008 E3
I009 D5
I010 E3
I011 E4
I012 B4
I013 B5
I014 B5

ITEM	KEYBOARD IR+LED-GL	KEYBOARD IR+LED-NA	IR+LED-NA	IR+LED EU/AP	FRNT.INTERF AP	TOP CTL + FR.PL INTERF - EU/NA
0231	2P 8/128A SDKV	-	-	2P 8/128A SDKV	-	-
9001	-	YES	YES	-	YES	YES
9002	-	YES	YES	-	YES	YES

ITEM	FRNT INTERF. - SLIM EU / LA	FRNT INTERF. - SLIM NA	FRNT INTERF. - SLIM EU NON ULL01L
0231	YES	---	YES
1606	---	YES	---
2691	YES	YES	---
2698	YES	YES	---
3500	YES	YES	---
3501	YES	YES	---
3685	---	YES	---
3691	YES	YES	---
3693	YES	YES	---
6691	YES	YES	---
6692	YES	YES	---
9901	---	YES	---
9002	---	YES	---

Layout Front Interface Panel (Top Side)

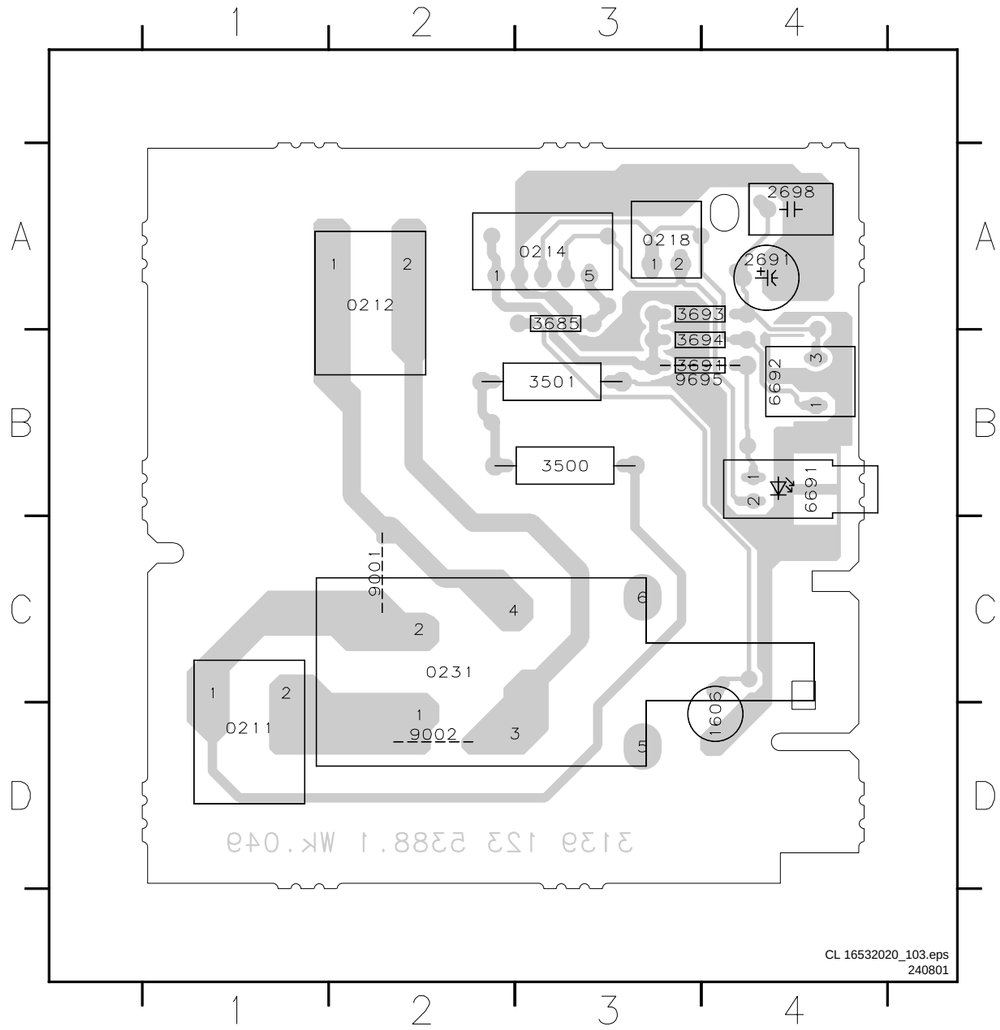

0211 C1
0212 A2
0214 A3
0218 A3
0231 C3
1606 D4
2691 A4
2698 A4
3500 B3
3501 B3
3685 A3
3691 B3
3693 A3
3694 B3
6691 B4
6692 B4
9001 C2
9002 D2
9695 B3

Top Control Panel (RF)

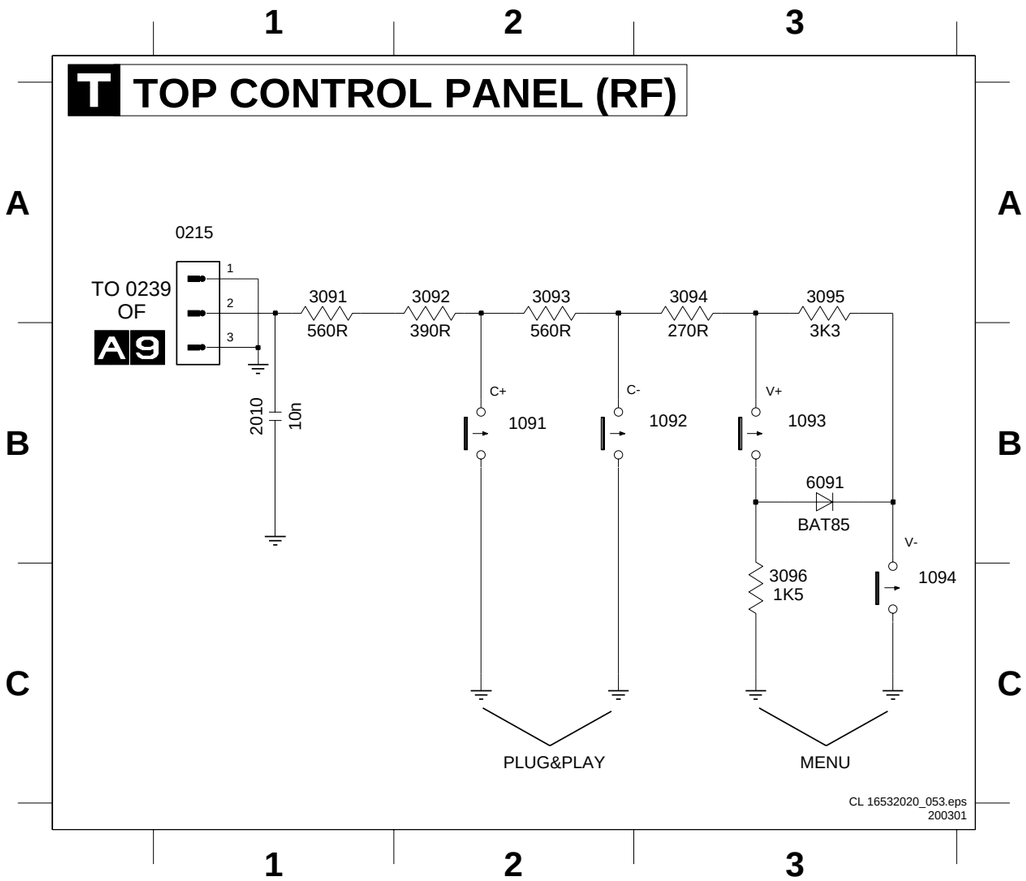

0215 A1
1091 B2
1092 B3
1093 B3
1094 C3
2010 B1
3091 A1
3092 A2
3093 A2
3094 A3
3095 A3
3096 C3
6091 B3

Layout Top Control Panel (RF) (Top Side)

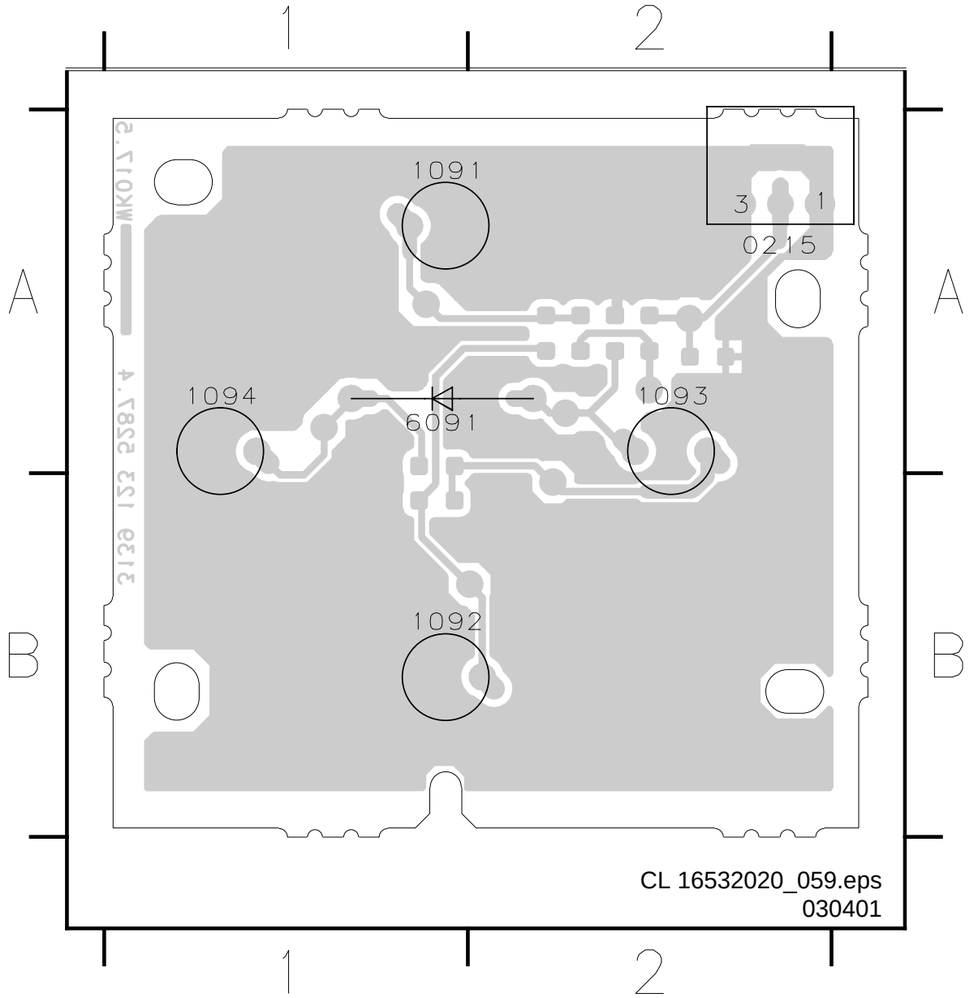

1091 A1
1092 B1
1093 A2
1094 A1
6091 A1

Top Control Panel (FSQ)

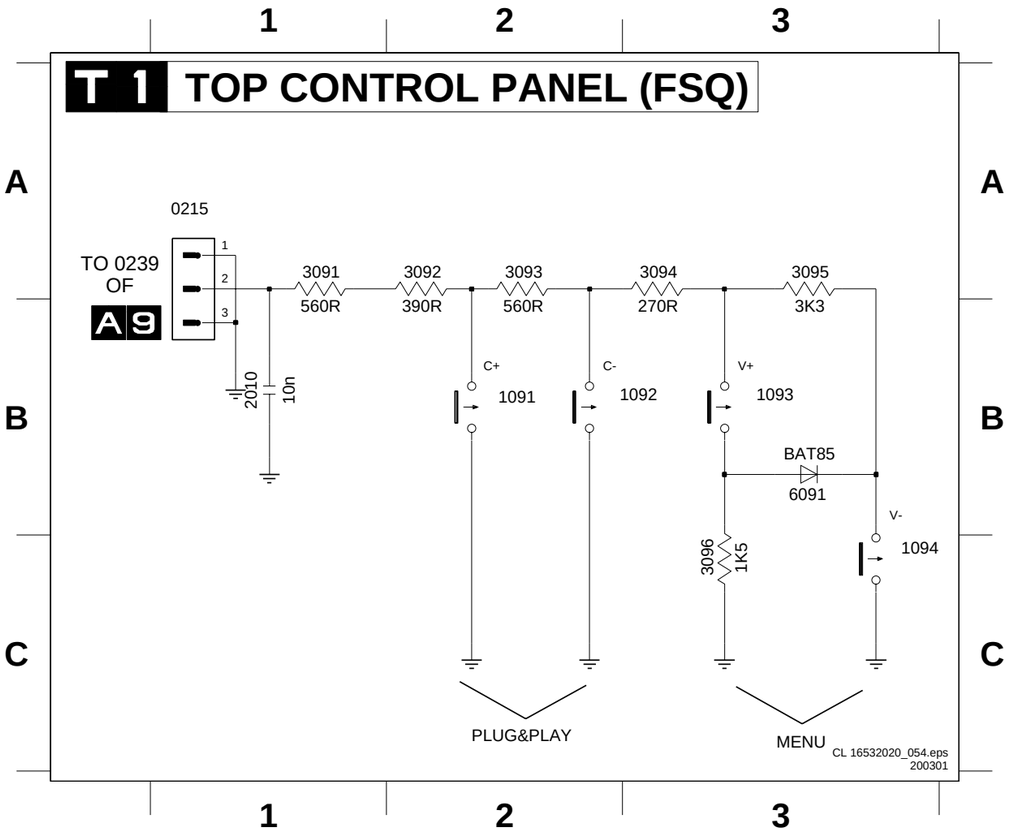

0215 A1
1091 B2
1092 B3
1093 B3
1094 C3
2010 B1
3091 A1
3092 A2
3093 A2
3094 A3
3095 A3
3096 C3
6091 B3

Layout Top Control Panel (FSQ) (Top Side)

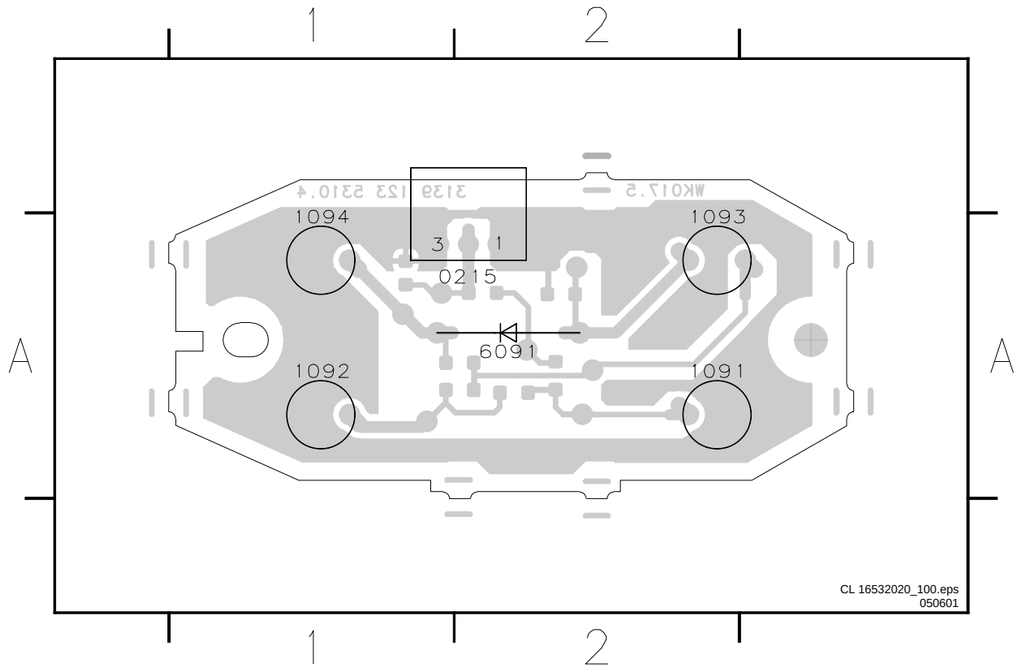

0215 A2
1091 A2
1092 A1
1093 A2
1094 A1
6091 A2

8. Alignments

Index of this chapter:
1. General Alignment Conditions
2. Hardware Alignments
3. Software Alignments and Settings

Note: The Service Default Mode (SDM) and Service Alignment Mode (SAM) are described in chapter 5. Menu navigation is done with the 'CURSOR UP, DOWN, LEFT or RIGHT' keys of the remote control transmitter.

8.1 General Alignment Conditions

Perform all electrical adjustments under the following conditions:
- Mains voltage and frequency: according to country's standard.
- Connect the set to the Mains via an isolation transformer.
- Allow the set to warm up for approximately 20 minutes.
- Measure the voltages and waveforms in relation to chassis ground (with the exception of the voltages on the primary side of the power supply). Never use the cooling fins/plates as ground.
- Test probe: Ri > 10 MΩ; Ci < 2.5 pF.
- Use an **isolated** trimmer/screwdriver to perform the alignments.

8.2 Hardware Alignments

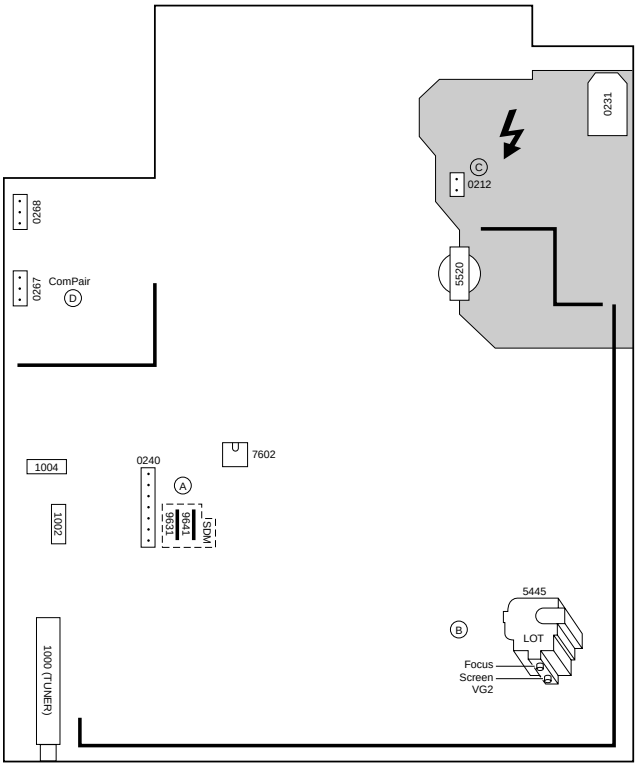

16532008_038.eps
160501

Figure 8-1

8.2.1 Vg2 Adjustment

1. Activate the SAM.
2. Go to the WHITE TONE sub menu.
3. Set the values of NORMAL RED, GREEN and BLUE to 40.
4. Go, via the MENU key, to the normal user menu and set
   – CONTRAST to zero.
   – BRIGHTNESS to minimum (OSD just visible in a dark room).
5. Return to the SAM via the MENU key.
6. Connect the RF output of a pattern generator to the antenna input. Test pattern is a 'black' picture (blank screen on CRT **without** any OSD info).
7. Set the channel of the oscilloscope to 50 V/div and the time base to 0.2 ms (external triggering on the vertical pulse).
8. Ground the scope at the CRT panel and connect a 10:1 probe to one of the cathodes of the picture tube socket (see diagram B).
9. Measure the cut off pulse during first full line after the frame blanking (see Fig. 8-2). You will see two pulses, one being the cut off pulse and the other being the white drive pulse. Choose the one with the lowest value, this is the cut off pulse.
10. Select the cathode with the highest V_{DC} value for the alignment. Adjust the V_{cutoff} of this gun with the SCREEN potentiometer (see Fig. 8-1) on the LOT to the correct value (see table below).
11. Restore BRIGHTNESS and CONTRAST to normal (= 31).

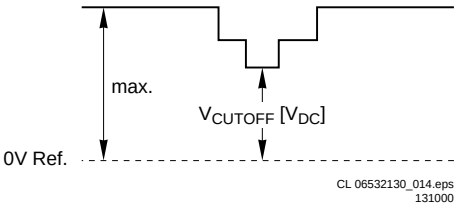

CL 06532130_014.eps
131000

Figure 8-2

CUT-OFF VOLTAGE	
Screen size	**Cut-off [V]**
13V, 14 , 14RF, 15RF, 17 , 19V, 20	140 4
21 (L01S)	150 4
21 (L01L), 20RF, 21RF, 24WS, 25BLD, 25HF, 28 BLD, 28WS	125 4
25V, 25BLS, 25RF, 27V, 28BLS, 29 , 29RF, 32V, 33 , 32WS, 35V	145 10

CL 16532008_056.pdf
220801

Figure 8-3

8.2.2 Focusing

1. Tune the set to a circle or crosshatch test pattern (use an external video pattern generator).
2. Choose picture mode NATURAL (or MOVIES) with the 'SMART PICTURE' button on the remote control transmitter.
3. Adjust the FOCUS potentiometer (see Fig. 8-1) until the vertical lines at 2/3 from east and west, at the height of the centreline, are of minimum width without visible haze.

8.3 Software Alignments and Settings

Enter the Service Alignment Mode (see chapter 5). The SAM menu will now appear on the screen.
Select one of the following alignments:
1. Options
2. Tuner
3. White Tone
4. Geometry
5. Audio

8.3.1 Options

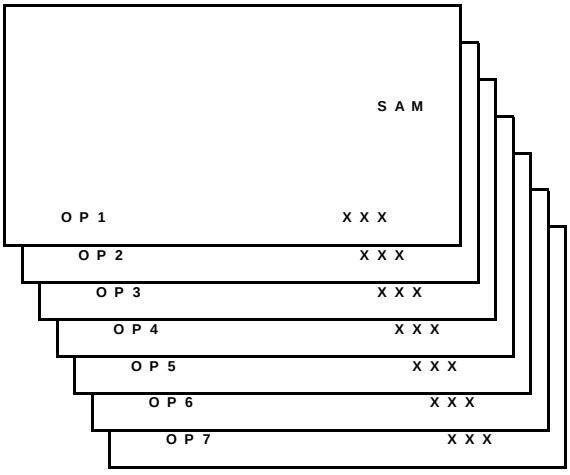

CL 16532008_048.pdf
220501

Figure 8-4

Options are used to control the presence/absence of certain features and hardware.

How to change an Option Byte
An Option Byte represents a number of different options. Changing these bytes directly makes it possible to set all options very fast. All options are controlled via seven option bytes. Select the option byte (OB1.. OB7) with the MENU UP/ DOWN keys, and enter the new value.

Leaving the OPTION submenu saves changes in the Option Byte settings. Some changes will only take effect after the set has been switched OFF and ON with the Mains switch (cold start).

How to calculate the value of an Option Byte
Calculate an Option Byte value (OB1 .. OB7) in the following way:

1. Check the status of the single option bits (OP): are they enabled (1) or disabled (0).
2. When an option bit is enabled (1) it represents a certain value (see first column 'value between brackets' in first table below). When an option bit is disabled, its value is 0.
3. The total value of an Option Byte is formed by the sum of its eight option bits. See second table below for the correct option numbers per typenumber.

Bit (value)	OB1	OB2	OB3	OB4	OB5	OB6	OB7
0 (1)	OP10	OP20	OP30	OP40	OP50	OP60	OP70
1 (2)	OP11	OP21	OP31	OP41	OP51	OP61	OP71
2 (4)	OP12	OP22	OP32	OP42	OP52	OP62	OP72
3 (8)	OP13	OP23	OP33	OP43	OP53	OP63	OP73
4 (16)	OP14	OP24	OP34	OP44	OP54	OP64	OP74
5 (32)	OP15	OP25	OP35	OP45	OP55	OP65	OP75
6 (64)	OP16	OP26	OP36	OP46	OP56	OP66	OP76
7 (128)	OP17	OP27	OP37	OP47	OP57	OP67	OP77
Total:	Sum	Sum	Sum	Sum	Sum	Sum	Sum

CL 16532008_04 .pdf
210501

Figure 8-5

Typenumber	OB1	OB2	OB3	OB4	OB5	OB6	OB7
21PT5306/01	220	246	193	184	244	54	67
21PT5506/01	220	246	225	184	244	54	67
21PT5506/05	220	246	225	184	244	54	67
21PT5506/58	220	246	225	184	244	54	65
24PW6006/01	220	246	159	184	244	54	67
24PW6006/05	220	246	159	184	244	54	67
25PT4457/01	220	246	225	56	244	2	67
25PT4457/05	220	246	225	56	244	2	67
25PT4457/58	220	246	225	56	244	2	65
25PT5107/01	220	246	225	184	244	54	67
25PT5107/05	220	246	225	56	244	2	67
25PT5107/58	220	246	225	184	244	54	65
25PT5506/01	28	174	129	152	128	32	67
25PT5506/58	28	174	129	152	128	32	65
28PT4406/58	4	196	224	40	228	0	65
28PT4406/01	4	196	224	40	228	0	67
28PT4457/01	220	246	225	56	244	2	67
28PT4457/05	220	246	225	56	244	2	67
28PT4457/58	220	246	225	56	244	2	65
28PT5107/01	220	246	225	184	244	54	67
28PT5107/05	220	246	225	184	244	2	67
28PT5107/58	220	246	225	184	244	54	65
28PW5407/01	28	214	158	40	244	2	67
28PW6006/05	220	246	159	184	244	54	67
28PW6006/01	220	246	159	184	244	54	67
28PW6006/58	220	246	158	40	244	54	65
29PT5306/01	220	246	225	184	244	54	67
29PT5306/58	220	246	225	184	244	54	65
29PT5506/01	220	246	225	184	244	54	67
29PT5506/58	220	246	225	184	244	54	65
32PW5407/01	28	222	158	40	244	2	67
32PW6006/01	220	254	159	184	244	54	67
32PW6006/05	220	254	159	184	244	54	67
32PW6006/21	220	254	159	184	244	54	67
32PW6006/25	220	254	159	184	244	54	67
32PW6006/48	28	246	158	40	244	0	67
32PW6006/58	28	246	158	40	244	0	65
63TA5216/03	28	22	224	40	244	0	67
63TA5216/11	28	22	224	40	244	0	67
63TA5216/18	28	22	224	40	244	0	67
70WA6216/03	28	22	158	40	244	0	67
70WA6216/11	28	22	158	40	244	0	67
70WA6216/18	28	22	158	40	244	0	67
82PW6216/18	28	30	158	40	244	0	67

CL 16532008_064.pdf
230501

Figure 8-6

Option Bit Assignment
Following are the option bit assignments for all L01 software clusters.

- **Option Byte 1 (OB1)**
  - OP10: CHINA
  - OP11: VIRGIN_MODE
  - OP12: UK_PNP
  - OP13: ACI
  - OP14: ATS
  - OP15: LNA
  - OP16: FM_RADIO
  - OP17: PHILIPS_TUNER
- **Option Byte 2 (OB2)**
  - OP20: HUE
  - OP21: COLOR_TEMP
  - OP22: CONTRAST_PLUS
  - OP23: TILT

- OP24: NOISE_REDUCTION
- OP25: CHANNEL_NAMING
- OP26: SMART_PICTURE
- OP27: SMART_SOUND

- **Option Byte 3 (OB3)**
  - OP30: AVL
  - OP31: WSSB
  - OP32: WIDE_SCREEN
  - OP33: SHIFT_HEADER_SUBTITLE
  - OP34: CONTINUOUS_ZOOM
  - OP35: COMPRESS_16_9
  - OP36: EXPAND_4_3
  - OP37: EW_FUNCTION
- **Option Byte 4 (OB4)**
  - OP40: STEREO_NON_DBX
  - OP41: STEREO_DBX
  - OP42: STEREO_PB
  - OP43: STEREO_NICAM_2CS
  - OP44: DELTA_VOLUME
  - OP45: ULTRA_BASS
  - OP46: VOLUME_LIMITER
  - OP47: INCR_SUR
- **Option Byte 5 (OB5)**
  - OP50: PIP
  - OP51: HOTEL_MODE
  - OP52: SVHS
  - OP53: CVI
  - OP54: AV3
  - OP55: AV2
  - OP56: AV1
  - OP57: NTSC_PLAYBACK
- **Option Byte 6 (OB6)**
  - OP60: Reserved (value = 0)
  - OP61: SMART_TEXT
  - OP62: SMART_LOCK
  - OP63: VCHIP
  - OP64: WAKEUP_CLOCK
  - OP65: SMART_CLOCK
  - OP66: SMART_SURF
  - OP67: PERSONAL_ZAPPING
- **Option Byte 7 (OB7)**
  - OP70: SOUND_SYSTEM_AP_3/ MULTI_STANDARD_EUR/SYSTEM_LT_2
  - OP71: SOUND_SYSTEM_AP_2/WEST_EU/ SYSTEM_LT_1
  - OP72: SOUND_SYSTEM_AP_1
  - OP73: COLOR_SYSTEM_AP
  - OP74: Reserved (value = 0)
  - OP75: Reserved (value = 0)
  - OP76: TIME_WIN2
  - OP77: TIME_WIN1

Option bit definition

OP10: CHINA
0 : Tuning is not for China set, or this option bit is not applicable,
1 : Tuning is for China set,
Default setting : 0.

OP11: VIRGIN_MODE
0 : Virgin mode is disabled or not applicable,
1 : Virgin mode is enabled. Plug and Play menu item will be displayed to perform installation at the initial start-up of the TV when VIRGIN_MODE is set to 1. After installation is finished, this option bit will be automatically set to 0,
Default setting : 0.

OP12: UK_PNP
0 : UK's default Plug and Play setting is not available or not applicable,
1 : UK's default Plug and Play setting is available. When UK_PNP and VIRGIN_MODE are set to 1 at the initial set-up, LANGUAGE = ENGLISH, COUNTRY = GREAT BRITAIN and after exiting from menu, VIRGIN_MODE will be set automatically to 0 while UK_PNP remains 1,
Default setting : 0.

OP13: ACI
0 : ACI feature is disabled or not applicable,
1 : ACI feature is enabled,
Default setting : 0.

OP14: ATS
0 : ATS feature is disabled or not applicable,
1 : ATS feature is enabled. When ATS is enabled, it sorts the program in an ascending order starting from program 1,
Default setting : 0.

OP15: LNA
0 : Auto Picture Booster is not available or not applicable,
1 : Auto Picture Booster is available,
Default setting : 0.

OP16: FM_RADIO
0 : FM radio feature is disabled or not applicable,
1 : FM radio feature is enabled,
Default setting : 0.

OP17: PHILIPS_TUNER
0 : ALPS/MASCO compatible tuner is in use,
1 : Philips compatible tuner is in use,
Default setting : 0.

OP20: HUE
0 : Hue/Tint Level is disabled or not applicable,
1 : Hue/Tint Level is enabled,
Default setting : 0.

OP21: COLOR_TEMP
0 : Colour Temperature is disabled or not applicable,
1 : Colour Temperature is enabled,
Default setting : 0.

OP22: CONTRAST_PLUS
0 : Contrast+ is disabled or not applicable,
1 : Contrast+ is enabled,
Default setting : 0.

OP23: TILT
0 : Rotate Picture is disabled or not applicable,
1 : Rotate Picture is enabled,
Default setting : 0.

OP24: NOISE_REDUCTION
0 : Noise Reduction (NR) is disabled or not applicable,
1 : Noise Reduction (NR) is enabled,
Default setting : 0.

OP25: CHANNEL_NAMING
0 : Name FM Channel is disabled or not applicable,
1 : Name FM Channel is enabled,
Default setting : 0.
Note: Name FM channel can be enabled only when FM_RADIO = 1.

OP26: SMART_PICTURE
0 : Smart Picture is disabled or not applicable,
1 : Smart Picture is enabled,
Default setting : 1

OP27: SMART_SOUND
0 : Smart Sound is disabled or not applicable,
1 : Smart Sound is enabled,
Default setting : 1

AP30: AVL
0 : AVL is disabled or not applicable,

1 : AVL is enabled,
Default setting : 0.

OP31: WSSB
0 : WSSB is disabled or not applicable,
1 : WSSB is enabled,
Default setting : 0. **Note:** This option bit can be set to 1 only when WIDE_SCREEN = 1.

OP32: WIDE_SCREEN
0 : Software is used for 4:3 set or not applicable,
1 : Software is used for 16:9 set,
Default setting : 0.

OP33: SHIFT_HEADER_SUBTITLE
0 : Shift Header/Subtitle is disabled or not applicable,
1 : Shift Header/Subtitle is enabled,
Default setting : 0. **Note:** This option bit can be set to 1 only when WIDE_SCREEN = 1.

OP34: CONTINUOUS_ZOOM
0 : Continuous Zoom is disabled or not applicable,
1 : Continuous Zoom is enabled,
Default setting : 0. **Note:** This option bit can be set to 1 only when WIDE_SCREEN = 1.

OP35: COMPRESS_16_9
0 : COMPRESS 16:9 selection is not applicable. Item should not be in the FORMAT menu list,
1 : COMPRESS 16:9 selection is applicable. Item should not be in the FORMAT menu list,
Default setting : 0.

OP36: EXPAND_4_3
0 : Expand 4:3 selection is not applicable. Item should not be in the FORMAT menu list,
1 : Expand 4:3 selection is applicable. Item should be in the FORMAT menu list,
Default setting : 0.

OP37: EW_FUNCTION
0 : EW function is disabled. In this case, only Expand 4:3 is allowed, Compress 16:9 is not applicable.
1 : EW function is enabled. In this case, both Expand 4:3 and Compress 16:9 are applicable.
Default setting : 0.

OP40: STEREO_NON_DBX
0 : For AP_NTSC, chip TDA 9853 is not present,
1 : For AP_NTSC, chip TDA 9853 is present,
Default setting : 0.

OP41: STEREO_DBX
0 : For AP_NTSC, chip MSP 3445 is not present,
1 : For AP_NTSC, chip MSP 3445 is present,
Default setting : 0.

OP42: STEREO_PB
0 : For AP_PAL, chip MSP3465 is not present,
1 : For AP_PAL, chip MSP3465 is present,
Default setting : 0.

OP43: STEREO_NICAM_2CS
0 : For EU and AP_PAL, chip MSP 3415 is not present,
1 : For EU and AP_PAL, chip MSP 3415 is present,
Default setting : 0.

OP44: DELTA_VOLUME
0 : Delta Volume Level is disabled or not applicable,
1 : Delta Volume Level is enabled,
Default setting : 0.

OP45: ULTRA_BASS
0 : Ultra Bass is disabled or not applicable,
1 : Ultra Bass is enabled,
Default setting : 0.

OP46: VOLUME_LIMITER
0 : Volume Limiter Level is disabled or not applicable,
1 : Volume Limiter Level is enabled,
Default setting : 0.

OP47: INCR_SUR
0 : Incredible Surround feature is disabled,
1 : Incredible Surround feature is enabled,
Default setting : 1

OP50: PIP
0 : PIP is disabled or not applicable,
1 : PIP is enabled,
Default setting : 0.

OP51: HOTEL_MODE
0 : Hotel mode is disabled or not applicable,
1 : Hotel mode is enabled,
Default setting : 0.

OP52: SVHS
0 : SVHS source is not available,
1 : SVHS source is available,
Default setting : 0.
Note: This option bit is not applicable for EU.

OP53: CVI
0 : CVI source is not available,
1 : CVI source is available,
Default setting : 0.

OP54: AV3
0 : Side/Front AV3 source is not present,
1 : Side/Front AV3 source is present,
Default setting : 0.

OP55: AV2
0 : AV2 source is not present,
1 : AV2 source is present,
Default setting : 0.
Note: For EU, when AV2=1, both EXT2 and SVHS2 should be included in the OSD loop.

OP56: AV1
0 : AV1 source is not present,
1 : AV1 source is present,
Default setting : 0.

OP57: NTSC_PLAYBACK
0 : NTSC playback feature is not available,
1 : NTSC playback feature is available,
Default setting : 0.

OP60: Reserved
Default setting : 0.

OP61: SMART_TEXT
0 : Smart Text Mode and Favourite Page are disabled or not applicable,
1 : Smart Text Mode and Favourite Page are enabled,
Default setting : 1.

OP62: SMART_LOCK
0 : Child Lock and Lock Channel are disabled or not applicable for EU,
1 : Child Lock and Lock Channel are enabled for EU,
Default setting : 1.

OP63: VCHIP
0 : VCHIP feature is disabled,

1 : VCHIP feature is enabled,
Default setting : 1.

OP64: WAKEUP_CLOCK
0 : Wake up clock feature is disabled or not applicable,
1 : Wake up clock feature is enabled,
Default setting : 1.

OP65: SMART_CLOCK
0 : Smart Clock Using Teletext and Smart Clock Using PBS is disabled or not applicable,
1 : Smart Clock Using Teletext and Smart Clock Using PBS is enabled. For NAFTA, menu item AUTOCHRON is present in the INSTALL submenu,
Default setting : 0.

OP66: SMART_SURF
0 : Smart Surf feature is disabled or not applicable,
1 : Smart Surf feature is enabled,
Default setting : 0.

OP67: PERSONAL_ZAPPING
0 : Personal Zapping feature is disabled or not applicable,
1 : Personal Zapping feature is enabled,
Default setting : 0.

OP70: MULTI_STANDARD_EUR
0 : Not for Europe multi standard set, or this option bit is not applicable,
1 : For Europe multi standard set.
Default setting : 0.
Note: This option bit is used to control the SYSTEM selection in Manual Store : If MULTI_STANDARD_EUR = 1 then SYSTEM = Europe, West Europe, East Europe, UK, France otherwise SYSTEM = ‘Europe, West Europe, UK for West Europe’ (WEST_EU=1) or SYSTEM = ‘Europe, West Europe, East Europe for East Europe’ (WEST_EU=0)

OP71: WEST_EU
0 : For East Europe set, or this option bit is not applicable,
1 : For West Europe set,
Default setting : 0.

OP71 and 70: SYSTEM_LT_1, SYSTEM_LT_2
These two option bits are allocated for LATAM system selection.
00 : NTSC-M
01 : NTSC-M, PAL-M
10 : NTSC-M, PAL-M, PAL-N
11 : NTSC-M, PAL-M, PAL-N, PAL-BG
Default setting : 00

OP70, 71 and 72: SOUND_SYSTEM_AP_1, SOUND_SYSTEM_AP_2, SOUND_SYSTEM_AP_3
These three option bits are allocated for AP_PAL sound system selection.
000 : BG
001 : BG/DK
010 : I/DK
011 : BG/I/DK
100 : BG/I/DK/M
Default setting : 00

OP73: COLOR_SYSTEM_AP
This option bit is allocated for AP-PAL colour system selection.
0 : Auto, PAL 4.43, NTSC 4.43, NTSC 3.58
1 : Auto, PAL 4.43, NTSC 4.43, NTSC 3.58, SECAM
Default setting : 0

OP74: Reserved
Default setting : 0.

OP75: Reserved
Default setting : 0.

OP77 and 76: TIME_WIN1, TIME_WIN2
00 : The time window is set to 1.2s
01 : The time window is set to 2s
10 : The time window is set to 5s
11 : not in use
Default setting : 01
Note: The time-out for all digit entries depend on this setting.

8.3.2 Tuner

Note: Described alignments are only necessary when the NVM (item 7602) is replaced.

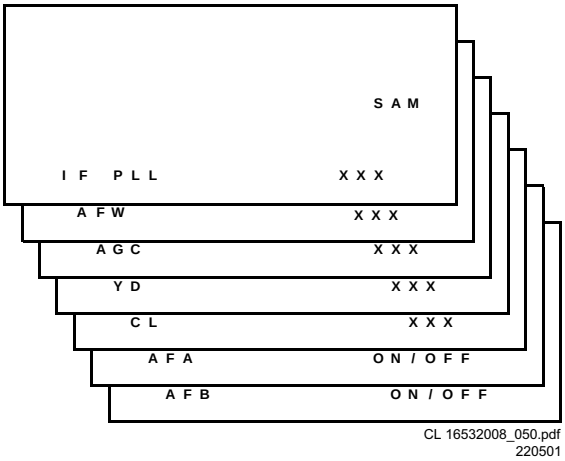

Figure 8-7

IFPLL
This adjustment is auto-aligned. Therefore, no action is required.
Default value is 30.

AFW (AFC window)
Select the lowest value.

AGC (AGC take over point)
Set the external pattern generator to a colour bar video signal and connect the RF output to aerial input.
Set amplitude to 10 mV and set frequency to 475.25 MHz (PAL/SECAM) or 61.25 MHz (NTSC).
Connect a DC multi-meter to pin 1 of the tuner (item 1000 on the main panel).
1. Activate the SAM.
2. Go to the TUNER sub menu.
3. Select AFW with the UP/DOWN cursor keys and set to ON.
4. Select AGC with the UP/DOWN cursor keys.
5. Adjust the AGC-value with the LEFT/RIGHT cursor keys until the voltage at pin 1 of the tuner lies between 3.8 and 2.3 V. Default value is 28.
6. Select AFW with the UP/DOWN cursor keys and set to OFF.
7. Switch the set to STANDBY.

YD (Y-delay adjustment)
Fixed value is 7.

CL (Cathode drive level)
Fixed value is 8.

AFA/AFB
Read only bit, for monitoring purpose only.

8.3.3 White Tone

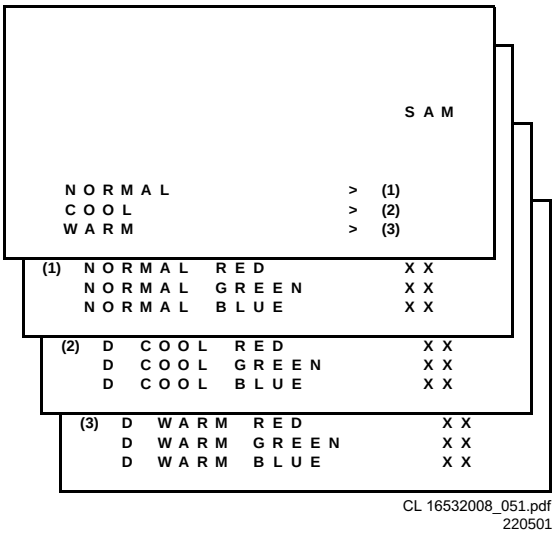

Figure 8-8

In the WHITE TONE sub menu, the values of the black cut off level can be adjusted. Normally, no alignment is needed for the WHITE TONE. You can use the given default values.
The colour temperature mode (NORMAL, COOL and WARM) and the colour (R, G, and B) can be selected with the UP/ DOWN RIGHT/LEFT cursor keys. The value can be changed with the LEFT/RIGHT cursor keys. First, select the values for the NORMAL colour temperature. Then select the values for the COOL and WARM mode. After alignment, switch the set to standby, in order to store the alignments.

Default settings:
1. **NORMAL** (colour temperature = 10500 K):
   – NORMAL R = 26
   – NORMAL G = 32
   – NORMAL B = 27
2. **COOL** (colour temperature = 14000 K):
   – DELTA COOL R = -3
   – DELTA COOL G = 0
   – DELTA COOL B = 5
3. **WARM** (colour temperature = 8200 K):
   – DELTA WARM R = 2
   – DELTA WARM G = 0
   – DELTA WARM B = -6

8.3.4 Geometry

The geometry alignments menu contains several items to align the set, in order to obtain a correct picture geometry.

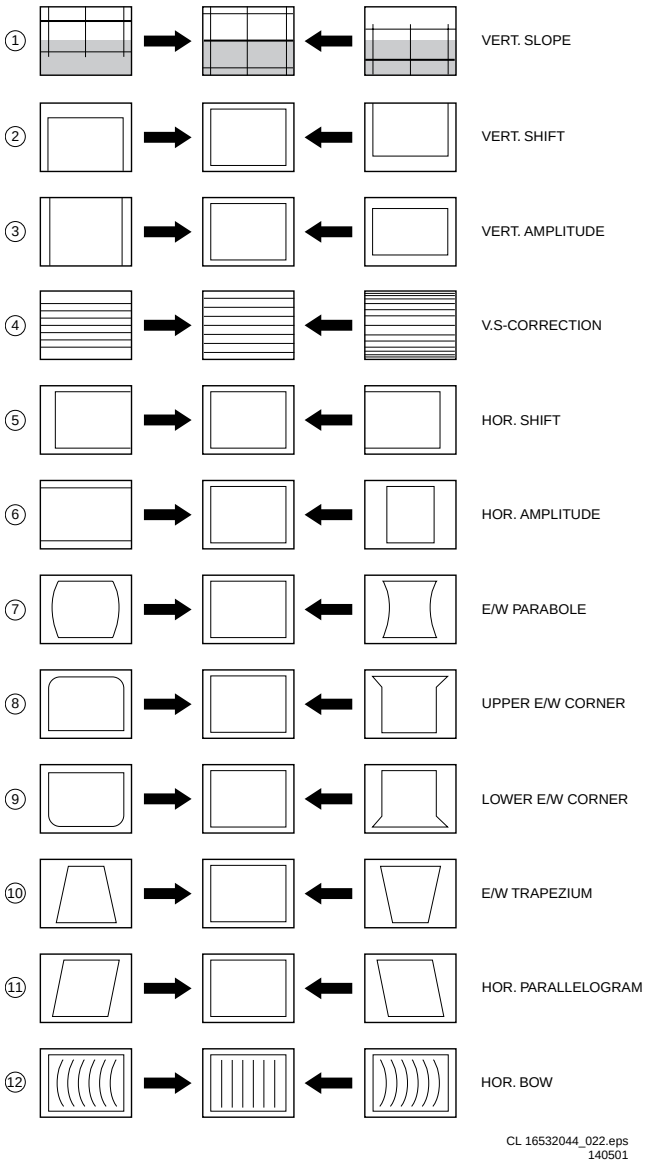

Figure 8-9

How to align
Connect an external video pattern generator to the aerial input of the TV-set and input a crosshatch test pattern.
Set amplitude to at least 1 mV and set frequency to 475.25 MHz (PAL/SECAM) or 61.25 MHz (NTSC).
1. Set 'Smart Picture' to NATURAL (or MOVIES).
2. Activate the SAM menu (see chapter 5).
3. Go to the GEOMETRY sub menu.
4. Choose HORIZONTAL or VERTICAL alignment

Now you can perform the following alignments:

Horizontal alignment
- **Horizontal Parallelogram (HP).** Align straight vertical lines in the top and the bottom; vertical rotation around the centre.
- **Horizontal Bow (HB).** Align straight horizontal lines in the top and the bottom; horizontal rotation around the centre.
- **Horizontal Shift (HSH).** Align the horizontal centre of the picture to the horizontal centre of the CRT.
- **East West Width (EWW).** Align the picture width until the complete test pattern is visible.
- **East West Parabola (EWP).** Align straight vertical lines at the sides of the screen.
- **Upper Corner Parabola (UCP).** Align straight vertical lines in the upper corners of the screen.

- **Lower Corner Parabola (LCP).** Align straight vertical lines in the lower corners of the screen.
- **East West Trapezium (EWT).** Align straight vertical lines in the middle of the screen.

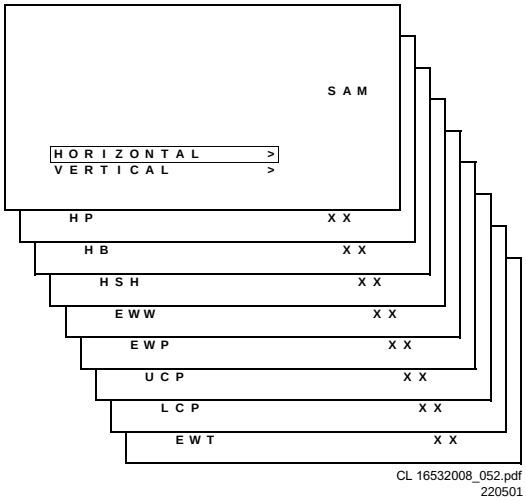

Figure 8-10

Vertical alignment

- **Vertical slope (VSL).** Align the vertical centre of the picture to the vertical centre of the CRT. This is the first of the vertical alignments to perform. For an easy alignment, set SBL to ON.
- **Vertical Amplitude (VAM).** Align the vertical amplitude so that the complete test pattern is visible.
- **Vertical S-Correction (VSC).** Align the vertical linearity, meaning that vertical intervals of a grid pattern must be equal over the entire screen height.
- **Vertical Shift (VSH).** Align the vertical centring so that the test pattern is located vertically in the middle. Repeat the 'vertical amplitude' alignment if necessary.
- **Vertical Zoom (VX).** The vertical zoom is added in for the purpose of development. It helps the designer to set proper values for the movie expand or movie (16x9) compress. Default value is 25.
- **Service blanking (SBL).** Switch the blanking of the lower half of the screen ON or OFF (to be used in combination with the vertical slope alignment).
- **H60.** Align straight horizontal lines if NTSC input (60 Hz) is used i.s.o. PAL (50 Hz).
- **V60.** Align straight vertical lines if NTSC input (60 Hz) is used i.s.o. PAL (50 Hz).

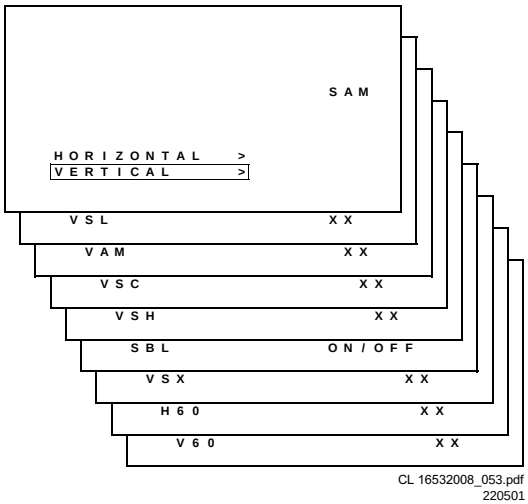

Figure 8-11

In the table below, you will find the GEOMETRY default values for the different sets.

DEFAULT GEOMETRY VALUES (L01 LARGE SCREEN)								
Alignment	**Description**	**21" (4:3)**	**24" (16:9)**	**25" (4:3)**	**28" (4:3)**	**28" (16:9)**	**29" (4:3)**	**32" (16:9)**
HP	Hor. Parallelogram	31	32	31	31	32	32	32
HB	Hor. Bow	31	32	31	31	32	32	32
HSH	Hor. Shift	35	27	35	35	27	27	27
EWW	East West Width	34	36	34	34	36	48	39
EWP	East West Parabola	33	20	33	33	20	20	20
UCP	Upper Corner Parabola	35	20	35	35	23	24	20
LCP	Lower Corner Parabola	35	25	35	35	25	28	25
EWT	East West Trapezium	35	28	35	35	28	28	28
VSL	Vert. Slope	33	37	33	33	37	37	37
VAM	Vert. Amplitude	26	30	26	26	30	39	30
VSC	Vert. S-correction	23	20	23	23	20	32	20
VSH	Vert. Shift	31	31	31	31	31	31	31
VX	Vert. Zoom	25	25	25	25	25	25	25
H60	Hor. Shift offset (60 Hz)	9	9	9	9	9	9	9
V60	Vert. Shift offset (60 Hz)	4	4	4	4	4	4	4

CL 16532008_054.pdf
220501

Figure 8-12

8.3.5 Audio

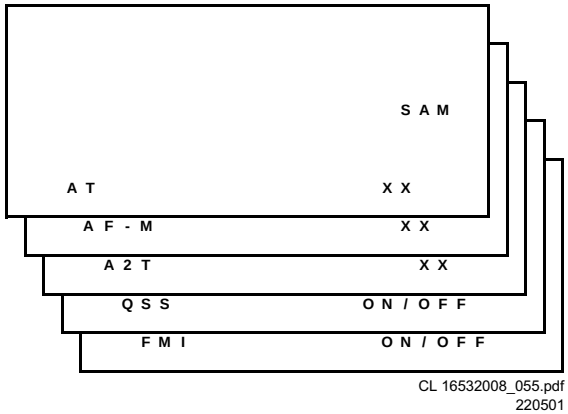

Figure 8-13

No alignments are needed for the audio sub menu. Use the given default values.

AT (Attack Time)
Default value is 8.

AF-M
Default value is 301.

A2T
Default value is 250.

QSS (Quasi Split Sound)
OFF for Intercarrier sets, ON for QSS sets.

FMI (Freq. Modulation Intercarrier)
OFF for QSS sets, ON for Intercarrier sets.

9. Circuit Description

Index of this chapter:

1. Introduction
2. Audio Signal Processing
3. Video Signal Processing
4. Synchronisation
5. Deflection
6. Power Supply
7. Control
8. Abbreviations

Notes:

- Figures can deviate slightly from the actual situation, due to different set executions.
- For a good understanding of the following circuit descriptions, please use the block diagram in chapter 6, or the electrical diagrams in chapter 7. Where necessary, you will find a separate drawing for clarification.

9.1 Introduction

The L01 chassis is a global TV chassis for the model year 2001 and is used for TV sets with screen sizes from 14” - 21” (small screen) to 21” - 32” (large screen).
The standard architecture consists of a Main panel, a Picture Tube panel, a Side I/O panel (not al executions) and a Top Control panel.
The Main panel consists primarily of conventional components with hardly any surface mounted devices.

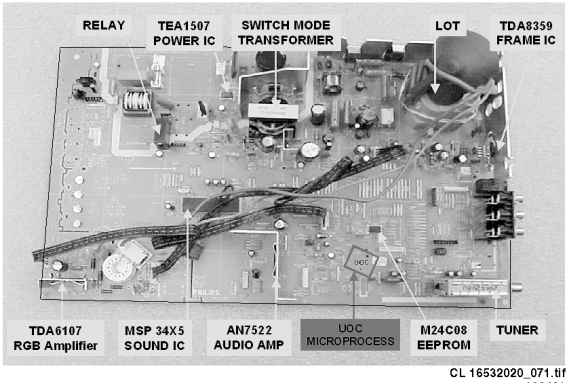

Figure 9-1

The functions for video processing, microprocessor (µP) and teletext (TXT) decoder are combined in one IC (TDA958xH), the so-called Ultimate One Chip (UOC). This chip is (surface) mounted on the copper side of the main panel.

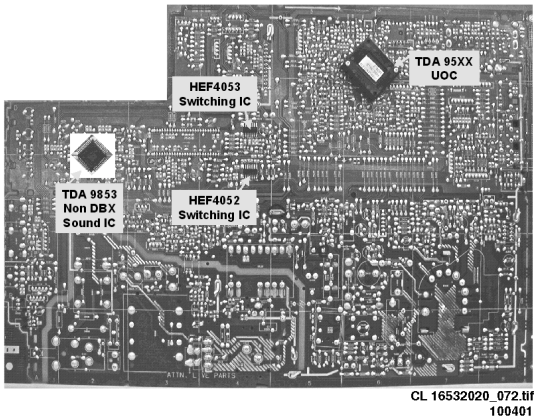

Figure 9-2

The L01 is divided into 2 basic systems, i.e. mono and stereo sound. While the audio processing for the mono sound is done in the audio block of the UOC, an external audio processing IC is used for stereo sets.

The tuning system features 100 video channels with on-screen display. The main tuning system uses a tuner, a microcomputer, and a memory IC mounted on the main panel. Also, in some type numbers, an FM radio is implemented with 40 pre-set channels.
The microcomputer communicates with the memory IC, the customer keyboard, remote receiver, tuner, signal processor IC and the audio output IC via the I^2C bus. The memory IC retains the settings for favourite stations, customer-preferred settings, and service/factory data.
The on-screen graphics and closed caption decoding are done within the microprocessor, and then sent to the signal processor IC to be added to the main signal.

The chassis uses a Switching Mode Power Supply (SMPS) for the main voltage source. The chassis has a ‘hot’ ground reference on the primary side and a cold ground reference on the secondary side of the power supply and the rest of the chassis.

9.2 Audio Signal Processing

9.2.1 Stereo

In stereo sets, the signal goes via the SAW filter (position 1004 in case of QSS demodulation and 1003 in case of Intercarrier demodulation), to the audio demodulator part of the UOC IC7200. The stereo audio output on pin 33 goes, via TS7206, to the stereo decoder 7831.
The switch inside the stereo decoder 7831 selects (via I^2C) either the internal decoder or an external source.
The NICAM + 2CS AM/FM stereo decoder is an ITT MSP34X5. The output is fed to the to the audio amplifier (AN7522 at position 7901). The volume level is controlled at this IC (pin 9) by a control line (VolumeMute) from the microprocessor. The audio signal from 7901 is then sent to the speaker/headphone output panel.

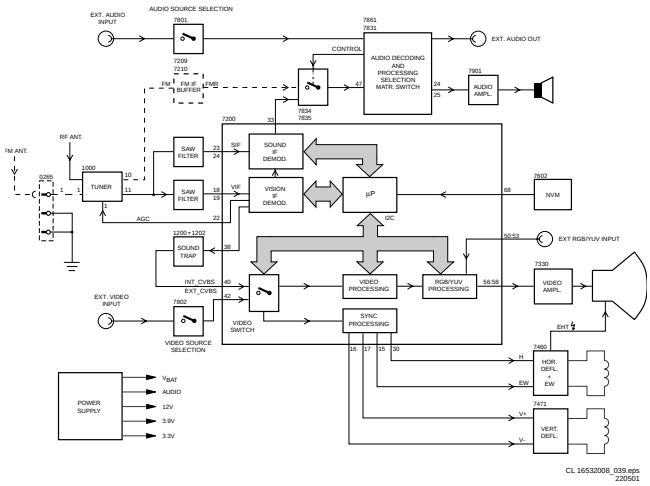

Figure 9-3

9.2.2 Mono

In mono sets, the signal goes via the SAW filter (position 1004 in case of QSS demodulation and 1003 in case of Intercarrier demodulation), to the audio demodulator part of the UOC IC7200. The audio output on pin 48 goes directly, via buffer 7943, to the audio amplifier (AN7523 at position 7902).
The volume level is controlled at this IC (pin 9) by a 'VolumeMute' control line from the microprocessor.
The audio signal from IC7902 is then sent to the speaker/ headphone output panel.

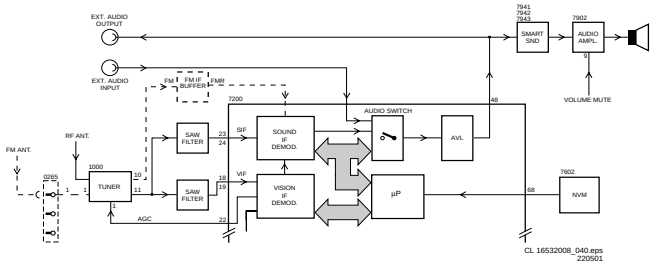

Figure 9-4 .eps

9.2.3 FM radio (if present)

The FM radio uses the 10.7 MHz concept. This SIF frequency is available at pin 10 of the tuner. Via a pre-amplifier (TS7209 and TS7210), the signal is fed for demodulation to either the UOC (for mono FM radio) or by the Micronas MSP34X5 (for stereo FM radio).

9.3 Video Signal Processing

9.3.1 Introduction

The video signal-processing path consists of the following parts:
- RF signal processing.
- Video source selection.
- Video demodulation.
- Luminance/Chrominance signal processing.
- RGB control.
- RGB amplifier

The processing circuits listed above are all integrated in the UOC TV processor. The surrounding components are for the adaptation of the selected application. The I^2C bus is for defining and controlling the signals.

9.3.2 RF Signal Processing

The incoming RF signal goes to the tuner (pos. 1000), where the 38.9 MHz IF signal is developed and amplified. The IF signals then exits the tuner from pin 11 to pass through the SAW filter (position 1002 in case of QSS demodulation and 1003 in case of Intercarrier demodulation). The shaped signal is then applied to the IF processor part of the UOC (pos. 7200). Tuner AGC (Automatic Gain Control) will reduce the tuner gain and thus the tuner output voltage when receiving strong RF signals. Adjust the AGC take-over point via the Service Alignment Mode (SAM). The tuner AGC starts working when the video-IF input reaches a certain input level and will adjust this level via the I^2C bus. The tuner AGC signal goes to the tuner (pin 1) via the open collector output (pin 22) of the UOC. The IC also generates an Automatic Frequency Control (AFC) signal that goes to the tuning system via the I^2C bus, to provide frequency correction when needed.
The demodulated composite video signal is available at pin 38 and then buffered by transistor 7201.

9.3.3 Video Source Selection

The Composite Video Blanking Signal (CVBS) from buffer 7201 goes to the audio carrier trap filters (1200 and 1201) to remove the audio signal. The signal then goes to pin 40 of IC7200. The internal input switch selects the following input signals:
- Pin 40: terrestrial CVBS input
- Pin 42: external AV1 CVBS input
- Pin 44: external Side I/O CVBS or AV2 Luminance (Y) input
- Pin 45: external AV2 Chrominance (C) input

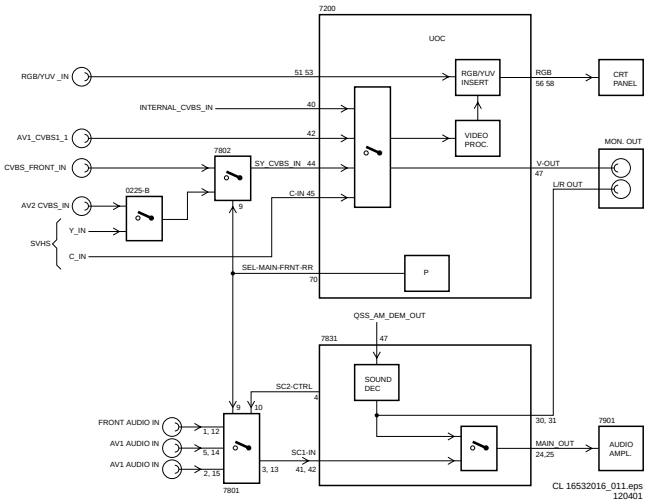

Figure 9-5

Once the signal source is selected, a chroma filter calibration is performed. The received colour burst sub-carrier frequency is used for this. Correspondingly, the chroma band pass filter for PAL processing or the cloche filter for SECAM processing is switched on. The selected luminance (Y) signal is supplied to the horizontal and vertical synchronisation processing circuit and to the luminance processing circuit. In the luminance-processing block, the luminance signal goes to the chroma trap filter. This trap is switched 'on' or 'off', depending on the colour burst detection of the chroma calibration circuit.
The group delay correction part can be switched between the BG and a flat group delay characteristic. This has the advantage that in multi-standard receivers no compromise has to be made for the choice of the SAW filter.

9.3.4 Video Demodulation

The colour decoder circuit detects whether the signal is a PAL, NTSC or SECAM signal. The result is made known to the auto system manager. The PAL/NTSC decoder has an internal clock generator, which is stabilised to the required frequency by using the 12 MHz clock signal from the reference oscillator of the microcontroller/teletext decoder.
The base-band delay line is used to obtain a good suppression of cross colour effects.
The Y signal and the delay line outputs U and V are applied to the luminance/chroma signal processing part of the TV processor.

9.3.5 Luminance/Chrominance Signal Processing

The output of the YUV separator is fed to the internal YUV switch, which switches between the output of the YUV separator or the external YUV (for DVD or PIP) on pins 51-53. Pin 50 is the input for the insertion control signal called 'FBL-1'. When this signal level becomes higher than 0.9 V (but less than 3 V), the RGB signals at pins 51, 52 and 53 are inserted into the picture by using the internal switches.

Also some picture improvement features are implemented in this part:

- Black stretch This function corrects the black level of incoming signals, which have a difference between the black level and the blanking level. The amount of extension depends upon the difference between actual black level and the darkest part of the incoming video signal level. It is detected by means of an internal capacitor.
- White stretch This function adapts the transfer characteristic of the luminance amplifier in a non-linear way depending on the average picture content of the luminance signal. It operates in such a way that maximum stretching is obtained when signals with a low video level are received. For bright pictures, stretching is not active.
- Dynamic skin tone correction This circuit corrects (instantaneously and locally) the hue of those colours which are located in the area in the UV plane that matches the skin tone. The correction is dependent on the luminance, saturation and distance to the preferred axis.

The YUV signal is then fed to the colour matrix circuit, which converts it to R, G and B signals.
The OSD/TXT signal from the microprocessor is mixed with the main signal at this point, before being output to the CRT board (pins 56, 57 and 58).

9.3.6 RGB Control

The RGB control circuit enables the picture parameters contrast, brightness and saturation to be adjusted, by using a combination of the user menus and the remote control. Additionally automatic gain control for the RGB signals via cut-off stabilisation is achieved in this functional block to obtain an accurate biasing of the picture tube. Therefor this block inserts the cut-off point measuring pulses into the RGB signals during the vertical retrace period.

The following additional controls are used:

- **Black current calibration loop** Because of the 2-point black current stabilisation circuit, both the black level and the amplitude of the RGB output signals depend on the drive characteristics of the picture tube. The system checks whether the returning measuring currents meet the requirements, and adapt the output level and gain of the circuit when necessary. After stabilisation of the loop, the RGB drive signals are switched on. The 2-point black level system adapts the drive voltage for each cathode in such a way that the two measuring currents have the right value. This is done with the measurement pulses during the frame flyback. During the first frame, three pulses with a current of 8 μA are generated to adjust the cut off voltage. During the second frame, three pulses with a current of 20 μA are generated to adjust the ‘white drive’. This has as a consequence, that a change in the gain of the output stage will be compensated by a gain change of the RGB control circuit. Pin 55 (BLKIN) of the UOC is used as the feedback input from the CRT base panel.
- **Blue stretch** This function increases the colour temperature of the bright scenes (amplitudes which exceed a value of 80% of the nominal amplitude). This effect is obtained by decreasing the small signal gain of the red and green channel signals, which exceed this 80% level.
- **Beam current limiting** A beam current limiting circuit inside the UOC handles the contrast and brightness control for the RGB signals. This prevents the CRT from being overdriven, which could otherwise cause serious damage in the line output stage. The reference used for this purpose is the DC voltage on pin 54 (BLCIN) of the TV processor. Contrast and brightness reduction of the RGB output signals is therefore proportional to the voltage present on this pin. Contrast reduction starts when the voltage on pin 54 is lower than 2.8 V. Brightness reduction starts when the voltage on pin 54 is less than 1.7 V. The voltage on pin 54 is normally 3.3 V (limiter not active). During set switch ‘off’, the black current control circuit generates a fixed beam current of 1 mA. This current ensures that the picture tube capacitance is discharged. During the switch-off period, the vertical deflection is placed in an over-scan position, so that the discharge is not visible on the screen.

9.3.7 RGB Amplifier

From outputs 56, 57 and 58 of IC7200, the RGB signals are applied to the integrated output amplifier (7330) on the CRT panel. Via the outputs 7, 8 and 9, the picture tube cathodes are driven.
The supply voltage for the amplifier is +200 V and is derived from the line output stage.

9.3.8 SCAVEM (if present)

The SCAn VElocity Modulation (SCAVEM) circuitry is implemented in the layout of the picture tube panel. It is thus not an extra module. This circuit influences the horizontal deflection as a function of the picture content. In an ideal square wave, the sides are limited in slope due to a limited bandwidth (5 MHz).

SCAVEM will improve the slope as follows:
At a positive slope, a SCAVEM current is generated which supports the deflection current. At the first half of the slope, the spot is accelerated and the picture is darker. At the second half of the slope, the spot is delayed and the slope becomes steeper.
At the end of the slope, the SCAVEM-current decays to zero and the spot is at the original position. An overshoot occurs which improves the impression of sharpness.
At the negative slope, the SCAVEM-current counteracts the deflection. During the first half of the slope, the spot is delayed and the slope becomes steeper. During the second half the spot accelerates, the SCAVEM-current is zero at the end of the slope.

Via the three resistors R3371, R3379 and R3386, Red, Green and Blue are added together, buffered and offered to the emitter of TS7363. On the collector of this transistor, configured in a common base, the sum of these 3 signals is obtained. Via the emitter follower formed with TS7360, this signal is conveyed to the differentiator C2376 and R3392. Only the high frequencies are differentiated (small RC-time).
The positive and negative pulses of this signal drive respectively TS7365 and TS7362 into conductivity. The DC setting of the output stage is set by R3363, R3374, R3378 and R3384. The working voltage of the transistors is settled at half the supply voltage.
At the positive section of the pulse, the current flows through TS7365 and the SCAVEM coil. At the negative section of the pulse, the current flows through TS7362 and the SCAVEM coil.

9.4 Synchronisation

Inside IC7200 (part D), the vertical and horizontal sync-pulses are separated. These ‘H’ and ‘V’ signals are synchronised with the incoming CVBS signal. They are then fed to the H- and V-drive circuits and to the OSD/TXT circuit for synchronisation of the On Screen Display and Teletext (or Closed Caption) information.

9.5 Deflection

9.5.1 Horizontal Drive

The horizontal drive signal is obtained from an internal VCO, which is running at twice the line frequency. This frequency is

divided by two, to lock the first control loop to the incoming signal.
When the IC is switched ‘on’, the ‘Hdrive’ signal is suppressed until the frequency is correct.
The ‘Hdrive’ signal is available at pin 30. The ‘Hflybk’ signal is fed to pin 31 to phase lock the horizontal oscillator, so that TS7462 cannot switch ‘on’ during the flyback time.
The ‘EWdrive’ signal for the E/W circuit (if present) is available on pin 15, where it drives transistor 7400 to make linearity corrections in the horizontal drive.

When the set is switched on, the ‘+8V’ voltage goes to pin 9 of IC7200. The horizontal drive starts up in a soft start mode. It starts with a very short T_{ON} time of the horizontal output transistor. The T_{OFF} of the transistor is identical to the time in normal operation. The starting frequency during switch on is therefore about 2 times higher than the normal value. The ‘on’ time is slowly increased to the nominal value in 1175 ms. When the nominal value is reached, the PLL is closed in such a way that only very small phase corrections are necessary.

The ‘EHTinformation’ line on pin 11 is intended to be used as a ‘X-ray’ protection. When this protection is activated (when the voltage exceeds 6 V), the horizontal drive (pin 30) is switched 'off' immediately. If the ‘H-drive’ is stopped, pin 11 will become low again. Now the horizontal drive is again switched on via the slow start procedure.
The ‘EHTinformation’ line (Aquadag) is also fed back to the UOC IC7200 pin 54, to adjust the picture level in order to compensate for changes in the beam current.

The filament voltage is monitored for ‘no’ or ‘excessive’ voltage. This voltage is rectified by diode 6447 and fed to the emitter of transistor TS7443. If this voltage goes above 6.8 V, transistor TS7443 will conduct, making the ‘EHT0’ line ‘high’. This will immediately switch off the horizontal drive (pin 30) via the slow stop procedure.

The horizontal drive signal exits IC7200 at pin 30 and goes to TS7462, the horizontal driver transistor. The signal is amplified and coupled to the base circuit of TS7460, the horizontal output transistor. This will drive the line output transformer (LOT) and associated circuit. The LOT provides the extra high voltage (EHT), the VG2 voltage and the focus and filament voltages for the CRT, while the line output circuit drives the horizontal deflection coil.

9.5.2 Vertical Drive

A divider circuit performs the vertical synchronisation. The vertical ramp generator needs an external resistor (R3245, pin 20) and capacitor (C2244, pin 21). A differential output is available at pins 16 and 17, which are DC-coupled with the vertical output stage.
To avoid damage of the picture tube when the vertical deflection fails, the ‘V_GUARD’ output is fed to the beam current limiting input. When a failure is detected, the RGB-outputs are blanked. When no vertical deflection output stage is connected, this guard circuit will also blank the output signals.

These ‘V_DRIVE+’ and ‘V_DRIVE-‘ signals are applied to the input pins 1 and 2 of IC 7471 (full bridge vertical deflection amplifier). These are voltage driven differential inputs. As the driver device (IC 7200) delivers output currents, R3474 and R3475 convert them to voltage. The differential input voltage is compared with the voltage across measuring resistor R3471 that provides internal feedback information. The voltage across this measuring resistor is proportional to the output current, which is available at pins 4 and 7 where they drive the vertical deflection coil (connector 0222) in phase opposition.
IC 7471 is supplied by +13 V. The vertical flyback voltage is determined by an external supply voltage at pin 6 (VlotAux+50V). This voltage is almost totally available as flyback voltage across the coil, this being possible due to the absence of a coupling capacitor (which is not necessary, due to the ‘bridge’ configuration).

9.5.3 Deflection Corrections

The Linearity Correction
A constant voltage on the horizontal deflection coil should result in a sawtooth current. This however is not the case as the resistance of the coil is not negligible. In order to compensate for this resistance, a pre-magnetised coil L5457 is used. R3485 and C2459 ensure that L5457 does not excite, because of its own parasite capacitance. This L5457 is called the 'linearity coil'.

The Mannheim Effect
When clear white lines are displayed, the high-voltage circuit is heavily loaded. During the first half of the flyback, the high voltage capacitors are considerable charged. At that point in time, the deflection coil excites through C2465. This current peak, through the high-voltage capacitor, distorts the flyback pulse. This causes synchronisation errors, causing an oscillation under the white line.
During t3 - t5, C2490//2458 is charged via R3459. At the moment of the flyback, C2490//2458 is subjected to the negative voltage pulses of the parabola as a result of which D6465 and D6466 are conducting and C2490//2458 is switched in parallel with C2456//2457. This is the moment the high-voltage diodes are conducting. Now extra energy is available for excitation through C2465 and the line deflection. As a consequence, the flyback pulse is less distorted.

The S-Correction
Since the sides of the picture are further away from the point of deflection than from the centre, a linear sawtooth current would result in a non-linear image being scanned (the centre would be scanned slower than the sides). For the centre-horizontal line, the difference in relation of the distances is larger then those for the top and bottom lines. An S-shaped current will have to be superimposed onto the sawtooth current. This correction is called finger-length correction or S-correction.

C2456//2457 is relatively small, as a result of which the sawtooth current will generate a parabolic voltage with negative voltage peaks. Left and right, the voltage across the deflection coil decreases, and the deflection will slow down; in the centre, the voltage increases and deflection is faster. The larger the picture width, the higher the deflection current through C2456//2457. The current also results in a parabolic voltage across C2484//2469, resulting in the finger length correction proportionally increasing with the picture width. The east/west drive signal will ensure the largest picture width in the centre of the frame. Here the largest correction is applied.

East/West Correction
In the L01, there are three types of CRTs, namely the 100º, 110º and wide screen CRTs. The 100º CRT is raster-correction-free and does not need East/West correction.
The 110º 4:3 CRT comes with East/West correction and East/West protection.
The wide screen TV sets have all the correction of the 110 4:3 CRT and also have additional picture format like the 4:3 format, 16:9, 14:9, 16:9 zoom, subtitle zoom and the Super-Wide picture format

A line, written at the upper- or lower side of the screen, will be larger at the screen centre when a fixed deflection current is used. Therefore, the amplitude of the deflection current must be increased when the spot approaches the centre of the screen. This is called the East/West or pincushion correction.

The ‘Ewdrive’ signal from pin 15 of IC7200 takes care for the correct correction. It drives FET TS7400. It also corrects breathing of the picture, due to beam current variations (the

EHT varies dependent of the beam current). This correction is derived from the 'EHTinformation' line.
Two protections are built-in for the E/W circuit: over-current and over-voltage protection. See paragraph Power Supply.

Panorama
The panorama function is only used in 16:9 sets. This is a function to enable the 4:3 and Super-Wide feature. It drives the 'Bass_panorama' line, to activate relay 1400. When this relay is switched on, the capacitors 2453//2454 are added in parallel to the default S-correction capacitors 2456//2457. This results in an increased capacitance, a lower resonance frequency of the line deflection coil and the S-correction capacitors and therefore a less steep S-corrected line deflection current.

9.5.4 Rotation (only present in widescreen sets)

To cope with the different earth magnetism situations in the world, a rotation coil is added in widescreen sets. This coil is controlled by the rotation circuitry (see diagram A15).
The amount of frame rotation is user controlled via the the PWM output (pin 77) of the UOC.
With the tilt setting at '-10', the PWM duty cycle is 0.1 (leftmost tuning).
With the setting at '+10', the duty cycle is 0.9 (rightmost tuning).
The output of amplifier IC7171 is a DC-voltage in the range from 0 (user setting = -10), via 6 V (user setting = 0) to 12 V (user setting = +10).

9.6 Power Supply

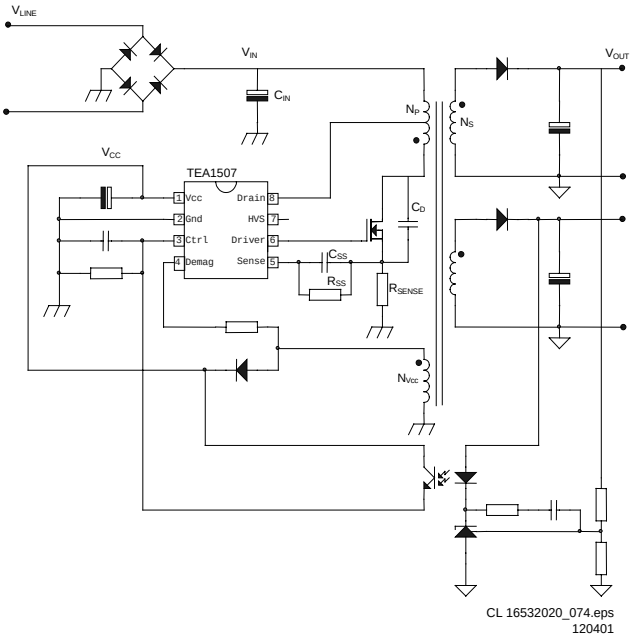

Figure 9-6

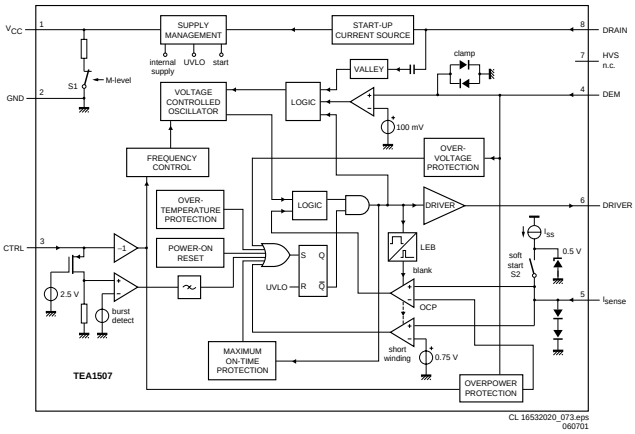

Figure 9-7

9.6.1 Introduction

The supply is a Switching Mode Power Supply (SMPS). The frequency of operation varies with the circuit load. This 'Quasi-Resonant Flyback' behaviour has some important benefits compared to a 'hard switching' fixed frequency Flyback converter. The efficiency can be improved up to 90%, which results in lower power consumption. Moreover the supply runs cooler and safety is enhanced.
The power supply starts operating when a DC voltage goes from the rectifier bridge via T5520, R3532 to pin 8. The operating voltage for the driver circuit is also taken from the 'hot' side of this transformer.
The switching regulator IC7520 starts switching the FET 'on' and 'off', to control the current flow through the primary winding of transformer 5520. The energy stored in the primary winding during the 'on' time is delivered to the secondary windings during the 'off' time.
The 'MainSupply' line is the reference voltage for the power supply. It is sampled by resistors 3543 and 3544 and fed to the input of the regulator 7540/6540. This regulator drives the feedback optocoupler 7515 to set the feedback control voltage on pin 3 of 7520.
The power supply in the set is 'on' any time AC power goes to the set.

Derived Voltages
The voltages supplied by the secondary windings of T5520 are:
- 'MainAux' for the audio circuit (voltage depends on set execution, see table below),
- 3.3 V and 3.9 V for the microprocessor and
- 'MainSupply' for the horizontal output (voltage depends on set execution, see table below).

Other supply voltages are provided by the LOT. It supplies +50 V (only for large screen sets), +13 V, +8 V, +5 V and a +200 V source for the video drive. The secondary voltages of the LOT are monitored by the 'EHTinformation' lines. These lines are fed to the video processor part of the UOC IC7200 on pins 11 and 34.
This circuit will shut 'off' the horizontal drive in case of over-voltage or excessive beam current.

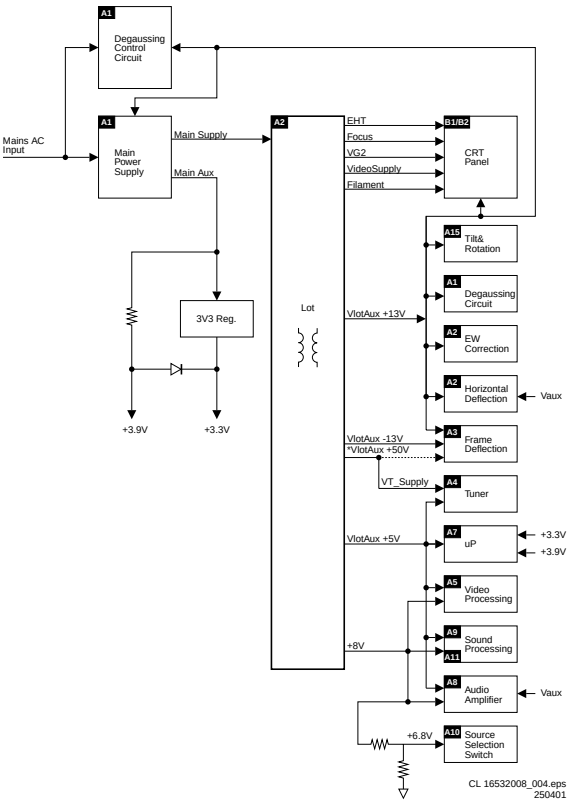

Figure 9-8

Power supply voltages L01				
Screen Size	**Voltage name**	**Meas. point**	**Value**	**Remark**
14", 17", 20", 21"	MainSupply	P6 (C2561)	95 V	
	MainAux	P5 (C2564)	11 V	Stereo 2x3 W and Mono 1x2 W, 3 W, 4 W
			10 V	Stereo 2x1 W and Mono 1x1 W
All others	MainSupply	P6 (C2561)	130 V	21/25/29RF and 25/27/32/35V
			143 V	25/28/29SF, 25/28BLD, 25/28BLS, 28/32WS, 24/28BLDWS & BLSWS
	MainAux	P5 (C2564)	12 V	Stereo 2x1 W, 3 W, 5 W
			10 V	Mono 1x1 W

CL 16532008_063.pdf
230501

Figure 9-9

Degaussing
When the set is switched on, the degaussing relay 1515 is immediately activated as transistor 7580 is conducting. Due to the RC-time of R3580 and C2580, it will last about 3 to 4 seconds before transistor 7580 is switched off.

9.6.2 Basic IC Functionality

For a clear understanding of the Quasi-Resonant behaviour, it is possible to explain it by a simplified circuit diagram (see Figure below). In this circuit diagram, the secondary side is transferred to the primary side and the transformer is replaced by an inductance L_P. C_D is the total drain capacitance including the resonance capacitor C_R, parasitic output capacitor C_{OSS} of the MOSFET and the winding capacitance C_W of the transformer. The turns ratio of the transformer is represented by n (N_P/N_S).

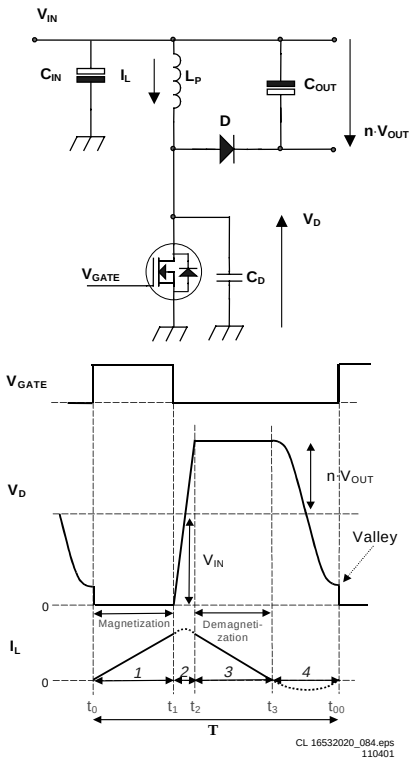

Figure 9-10

In the Quasi-Resonant mode each period can be divided into four different time intervals, in chronological order:

- Interval 1: t0 < t < t1 primary stroke At the beginning of the first interval, the MOSFET is switched 'on' and energy is stored in the primary inductance (magnetisation). At the end, the MOSFET is switched 'off' and the second interval starts.
- Interval 2: t1 < t < t2 commutation time In the second interval, the drain voltage will rise from almost zero to $V_{IN}+n\bullet(V_{OUT}+V_F)$. V_F is the forward voltage drop of de diode that will be omitted from the equations from now on. The current will change its positive derivative, corresponding to V_{IN}/L_P, to a negative derivative, corresponding to $-n\bullet V_{OUT}/L_P$.
- Interval 3: t2 < t < t3 secondary stroke In the third interval, the stored energy is transferred to the output, so the diode starts to conduct and the inductive current I_L will decrease. In other words, the transformer will be demagnetised. When the inductive current has become zero the next interval begins.
- Interval 4: t3 < t < t00 resonance time In the fourth interval, the energy stored in the drain capacitor C_D will start to resonate with the inductance L_P. The voltage and current waveforms are sinusoidal waveforms. The drain voltage will drop from $V_{IN}+n\bullet V_{OUT}$ to $V_{IN}-n\bullet V_{OUT}$.

Frequency Behaviour
The frequency in the QR-mode is determined by the power stage and is not influenced by the controller (important parameters are L_P and C_D). The frequency varies with the input voltage V_{IN} and the output power P_{OUT}. If the required output power increases, more energy has to be stored in the transformer. This leads to longer magnetising t_{PRIM} and demagnetising t_{SEC} times, which will decrease the frequency. See the frequency versus output power characteristics below. The frequency characteristic is not only output power-, but also input voltage dependent. The higher the input voltage, the smaller t_{PRIM}, so the higher the frequency will be.

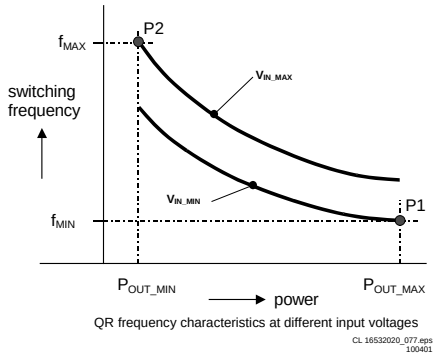

Figure 9-11

Point P1 is the minimum frequency f_{MIN} that occurs at the specified minimum input voltage and maximum output power required by the application. Of course the minimum frequency has to be chosen above the audible limit (>20 kHz).

Start-up Sequence

When the rectified AC voltage V_{IN} (via the centre tap connected to pin 8) reaches the Mains dependent operation level (Mlevel: between 60 and 100 V), the internal 'Mlevel switch' will be opened and the start-up current source is enabled to charge capacitor C2521 at the V_{CC} pin as shown below.
The 'soft start' switch is closed when the V_{CC} reaches a level of 7 V and the 'soft start' capacitor C_{SS} (C2522, between pin 5 and the sense resistor R3526), is charged to 0.5 V.
Once the V_{CC} capacitor is charged to the start-up voltage $V_{CC\text{-}start}$ (11 V), the IC starts driving the MOSFET. Both internal current sources are switched 'off' after reaching this start-up voltage. Resistor R_{SS} (3524) will discharge the 'soft start' capacitor, such that the peak current will slowly increase. This to prevent 'transformer rattle'.
During start-up, the V_{CC} capacitor will be discharged until the moment that the primary auxiliary winding takes over this voltage.

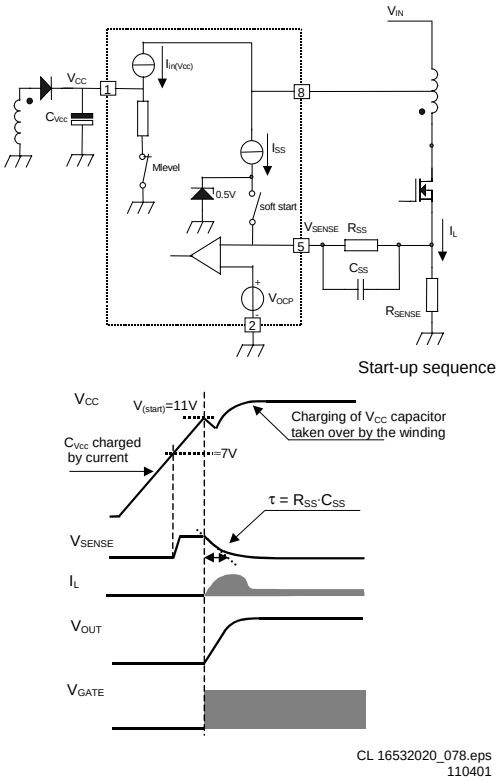

Figure 9-12

The moment that the voltage on pin 1 drops below the 'under voltage lock out' level (UVLO = ± 9 V), the IC will stop switching and will enter a safe restart from the rectified mains voltage.

Operation

The supply can run in three different modes depending on the output power:

- Quasi-Resonant mode (QR) The QR mode, described above, is used during normal operation. This will give a high efficiency.
- Frequency Reduction mode (FR) The FR mode (also called VCO mode) is implemented to decrease the switching losses at low output loads. In this way the efficiency at low output powers is increased, which enables power consumption smaller than 3 W during stand-by. The voltage at the pin 3 (Ctrl) determines where the frequency reduction starts. An external Ctrl voltage of 1.425 V corresponds with an internal VCO level of 75 mV. This fixed VCO level is called $V_{VCO,start}$. The frequency will be reduced in relation to the VCO voltage between 75 mV and 50 mV (at levels larger than 75 mV, Ctrl voltage < 1.425V, the oscillator will run on maximum frequency f_{oscH} = 175 kHz typically). At 50 mV ($V_{VCO,max}$) the frequency is reduced to the minimum level of 6 kHz. Valley switching is still active in this mode.
- Minimum Frequency mode (MinF) At VCO levels below 50 mV, the minimum frequency will remain on 6 kHz, which is called the MinF mode. Because of this low frequency, it is possible to run at very low loads without having any output regulation problems.

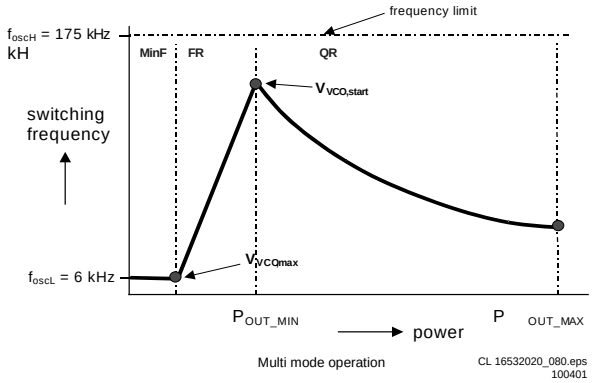

Figure 9-13

Safe-Restart Mode

This mode is introduced to prevent the components from being destroyed during eventual system fault conditions. It is also used for the Burst mode. The Safe-Restart mode will be entered if it is triggered by one of the following functions:

- Over voltage protection,
- Short winding protection,
- Maximum 'on time' protection,
- V_{CC} reaching UVLO level (fold back during overload),
- Detecting a pulse for Burst mode,
- Over temperature protection.

When entering the Safe-Restart mode, the output driver is immediately disabled and latched. The V_{CC} winding will not charge the V_{CC} capacitor anymore and the V_{CC} voltage will drop until UVLO is reached. To recharge the V_{CC} capacitor, the internal current source ($I_{(restart)(VCC)}$) will be switched 'on' to initiate a new start-up sequence as described before. This Safe-Restart mode will persist until the controller detects no faults or burst triggers.

Standby

The set goes to Standby in the following cases:

- After pressing the 'standby' key on the remote control.
- When the set is in protection mode.

In Standby, the power supply works in ‘burst mode’.
Burst mode can be used to reduce the power consumption below 1 W at stand-by. During this mode, the controller is active (generating gate pulses) for only a short time and for a longer time inactive waiting for the next burst cycle.
In the active period the energy is transferred to the secondary and stored in the buffer capacitor C_{STAB} in front of the linear stabiliser (see Figure below). During the inactive period, the load (e.g. microprocessor) discharges this capacitor. In this mode, the controller makes use of the Safe-Restart mode.

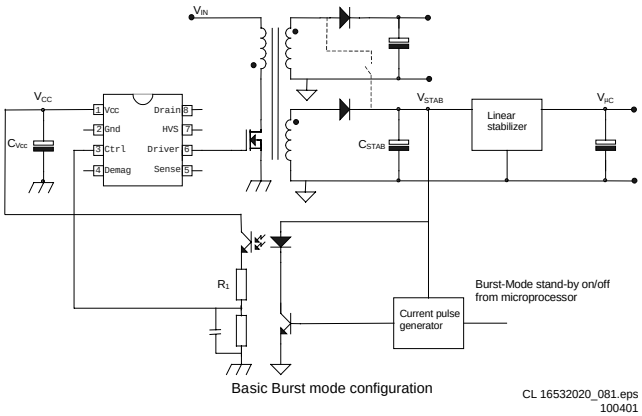

Figure 9-14

The system enters burst mode standby when the microprocessor activates the ‘Stdby_con’ line. When this line is pulled high, the base of TS7541 is allowed to go high. This is triggered by the current from collector TS7542. When TS7541 turns ‘on’, the opto-coupler (7515) is activated, sending a large current signal to pin 3 (Ctrl). In response to this signal, the IC stops switching and enters a ‘hiccup’ mode. This burst activation signal should be present for longer than the ‘burst blank’ period (typically 30 μs): the blanking time prevents false burst triggering due to spikes.
Burst mode standby operation continues until the microcontroller pulls the ‘Stdby_con’ signal low again. The base of TS7541 is unable to go high, thus cannot turn ‘on’. This will disable the burst mode. The system then enters the start-up sequence and begins normal switching behaviour.

For a more detailed description of one burst cycle, three time intervals are defined:

- t1: Discharge of V_{CC} when gate drive is active During the first interval, energy is transferred, which result in a ramp-up of the output voltage (V_{STAB}) in front of the stabiliser. When enough energy is stored in the capacitor, the IC will be switched ‘off’ by a current pulse generated at the secondary side. This pulse is transferred to the primary side via the opto coupler. The controller will disable the output driver (safe restart mode) when the current pulse reaches a threshold level of 16 mA into the Ctrl pin. A resistor R_1 (R3519) is placed in series with the opto coupler, to limit the current going into the Ctrl pin. Meanwhile the V_{CC} capacitor is discharged but has to stay above V_{UVLO} .
- t2: Discharge of V_{CC} when gate drive is inactive During the second interval, the V_{CC} is discharged to V_{UVLO}. The output voltage will decrease depending on the load.
- t3: Charge of V_{CC} when gate drive is inactive The third interval starts when the UVLO is reached. The internal current source charges the V_{CC} capacitor (also the soft start capacitor is recharged). Once the V_{CC} capacitor is charged to the start-up voltage, the driver is activated and a new burst cycle is started.

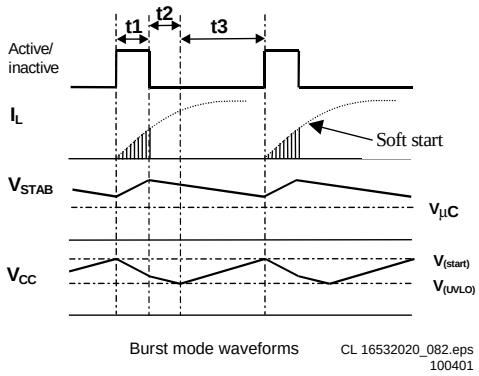

Figure 9-15

9.6.3 Protection Events

The SMPS IC7520 has the following protection features:

Demagnetisation sense
This feature guarantees discontinuous conduction mode operation in every situation. The oscillator will not start a new primary stroke until the secondary stroke has ended. This is to ensure that FET 7521 will not turn on until the demagnetisation of transformer 5520 is completed. The function is an additional protection feature against:

- saturation of the transformer,
- damage of the components during initial start-up,
- an overload of the output.

The demag(netisation) sense is realised by an internal circuit that guards the voltage (Vdemag) at pin 4 that is connected to V_{CC} winding by resistor R_1 (R3522). The Figure below shows the circuit and the idealised waveforms across this winding.

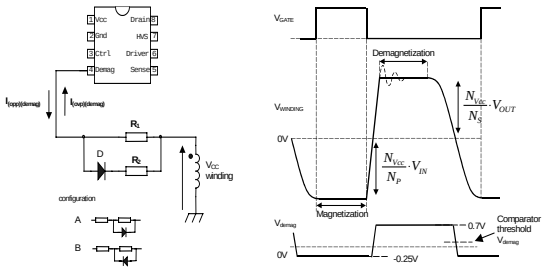

Figure 9-16

Over Voltage Protection
The Over Voltage Protection ensures that the output voltage will remain below an adjustable level. This works by sensing the auxiliary voltage via the current flowing into pin 4 (DEM) during the secondary stroke. This voltage is a well-defined replica of the output voltage. Any voltage spikes are averaged by an internal filter.
If the output voltage exceeds the OVP trip level, the OVP circuit switches the power MOSFET ‘off’.
Next, the controller waits until the ‘under voltage lock out‘ level (UVLO = ± 9 V) is reached on pin 1 (V_{CC}). This is followed by a safe restart cycle, after which switching starts again. This process is repeated as long as the OVP condition exists. The output voltage, at which the OVP function trips, is set by the demagnetisation resistor R3522.

Over Current Protection
The internal OCP protection circuit limits the ‘sense’ voltage on pin 5 to an internal level.

Over Power Protection
During the primary stroke, the rectified AC input voltage is measured by sensing the current drawn from pin 4 (DEM). This current is dependent on the voltage on pin 9 of transformer 5520 and the value of R3522. The current information is used to adjust the peak drain current, which is measured via pin I_{SENSE}.

Short Winding Protection
If the 'sense' voltage on pin 5 exceeds the short winding protection voltage (0.75 V), the converter will stop switching. Once V_{CC} drops below the UVLO level, capacitor C2521 will be recharged and the supply will start again. This cycle will be repeated until the short circuit is removed (safe restart mode). The short winding protection will also protect in case of a secondary diode short circuit.
This protection circuit is activated after the leading edge blanking time (LEB).

LEB time
The LEB (Leading Edge Blanking) time is an internally fixed delay, preventing false triggering of the comparator due to current spikes. This delay determines the minimum 'on' time of the controller.

Over Temperature protection
When the junction temperature exceeds the thermal shutdown temperature (typ. 140º C), the IC will disable the driver. When the V_{CC} voltage drops to UVLO, the V_{CC} capacitor will be recharged to the $V_{(start)}$ level. If the temperature is still too high, the V_{CC} voltage will drop again to the UVLO level (Safe-Restart mode). This mode will persist until the junction temperature drops 8 degrees typically below the shutdown temperature.

Mains dependent operation enabling level
To prevent the supply from starting at a low input voltage, which could cause audible noise, a mains detection is implemented (Mlevel). This detection is provided via pin 8, that detects the minimum start-up voltage between 60 and 100 V. As previous mentioned, the controller is enabled between 60 and 100 V. An additional advantage of this function is the protection against a disconnected buffer capacitor (C_{IN}). In this case, the supply will not be able to start-up because the V_{CC} capacitor will not be charged to the start-up voltage.

9.7 Control

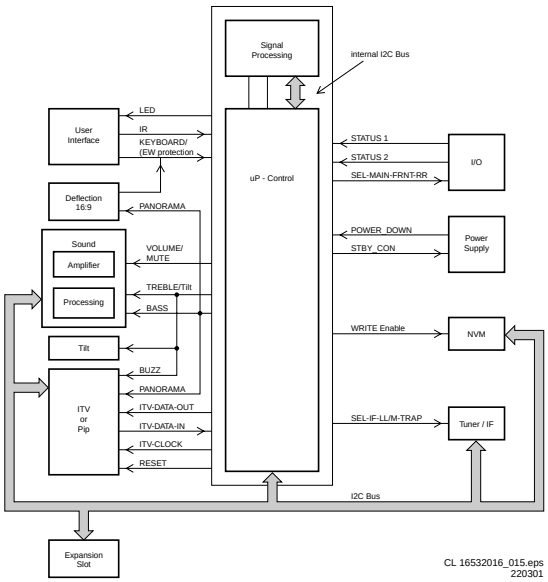

Figure 9-17

9.7.1 Introduction

The microprocessor part of the UOC has the complete control and teletext on board. User menu, Service Default Mode, Service Alignment Mode and Customer Service Mode are generated by the µP. Communication to other ICs is done via the I^2C-bus.

9.7.2 I^2C-Bus

The main control system, which consists of the microprocessor part of the UOC (7200), is linked to the external devices (tuner, NVM, MSP, etc) by means of the I^2C-bus. An internal I^2C-bus is used to control other signal processing functions, like video processing, sound IF, vision IF, synchronisation, etc.

9.7.3 User Interface

There are two control signals, called 'KEYBOARD_protn' and 'IR'. Users can interact either through the Remote Control transmitter, or by activation of the appropriate keyboard buttons.
The L01 uses a remote control with RC5 protocol. The incoming signal is connected to pin 67 of the UOC.
The 'Top Control' keyboard, connected to UOC pin 80, can also control the set. Button recognition is done via a voltage divider. The 'KEYBOARD_protn' line, also serves to detect faults in the E/W circuit, which would require the µP to shut down the set (by forcing the power supply in standby mode).

The front LED (6691) is connected to an output control line of the microprocessor (pin 5). It is activated to provide the user information about whether or not the set is working correctly (e.g., responding to the remote control or fault condition)

9.7.4 Sound Interface

There are three control signals, called 'Volume_Mute', 'Treble_Buzzer_Hosp_app' and 'Bass_panorama'.
The 'Volume_Mute' line controls the sound level output of the audio amplifier or to mute it in case of no video identification or from user command. This line also controls the volume level during set switch 'on' and 'off' (to prevent audio plop).
The 'Treble' and 'Bass' lines have another functionality:
- The 'Bass_panorama' line is used to switch the panorama mode in widescreen sets (to fit 4:3 pictures into a 16:9 display, it is possible to apply a panoramic horizontal distortion, to make a screen-fitting picture without black sidebars or lost video).
- The 'Treble_Buzzer_Hosp_app' is used in ITV applications for other feautures, and in widescreen sets to enable the 'Tilt' feature (via R3172 on diagram A8) in the deflection part.

9.7.5 In- and Output Selection

For the control of the input and output selections, there are three lines:
- **STATUS1** This signal provides information to the microprocessor on whether a video signal is available on the SCART1 AV input and output port.
  - 0 to 2 V: INTERNAL 4:3
  - 4.5 to 7 V: EXTERNAL 16:9
  - 9.5 to 12 V: EXTERNAL 4:3
- **STATUS2** This signal provides information to the microprocessor on whether a video signal is available on the SCART2 AV input and output port (signal is low). For sets with an SVHS input, it provides the additional information if a Y/C or CVBS source is present (signal is high). The presence of an external Y/C source makes this line 'high' while a CVBS source makes the line 'low'.
  - 0 to 2 V: INTERNAL 4:3
  - 4.5 to 7 V: EXTERNAL 16:9

- 9.5 to 12 V: EXTERNAL 4:3
- **SEL-MAIN-FRNT-RR** This is the 'source select control' signal from the microprocessor. This control line is under user control or can be activated by the other two control lines.

9.7.6 Power Supply Control

The microprocessor part is supplied with 3.3 V and 3.9 V both derived from the 'MainAux' voltage via a 3V3 stabiliser (7560) and a diode.
Two signals are used to control the power supply:

- **Stdby_con** This signal is generated by the microprocessor when over-current takes place at the 'MainAux' line. This is done to enable the power supply into standby burst mode, and to enable this mode during a protection. This signal is 'low' under normal operation conditions and goes to 'high' (3.3 V) under 'standby' and 'fault' conditions.
- **POWER_DOWN** This signal is generated by the power supply. Under normal operating conditions this signal is 'high' (3.3 V). During 'standby' mode, this signal is a pulse train of approx. 10 Hz and a 'high' duration of 5 ms. It is used to give information to the UOC about the fault condition in the Audio amplifier supply circuit. This information is generated by sensing the current on the 'MainAux' line (using voltage drop across R3564 to trigger TS7562). This signal goes 'low' when the DC-current on the 'MainAux' line exceeds 1.6 - 2.0 A. It is also used to give an early warning to the UOC about a power failure. Then the information is used to mute the sound amplifier to prevent a switch off noise and to solve the switch-off spot.

9.7.7 Tuner IF

Pin 3 of the UOC (SEL-IF-LL'_M-TRAP), is an output pin to switch the SAW-filter to the appropriate system.

- If UOC pin 3 is 'low', the selected system is:
  - West Europe: PAL B/G, I, SECAM L/L'
  - East Europe: PAL B/G
  - Asia Pacific: NTSC M
- If UOC pin 3 is 'high', the selected system is:
  - West Europe: SECAM L', L'-NICAM
  - East Europe: PAL D/K
  - Asia Pacific: PAL B/G, D/K, I

Note: For West Europe, two separate SAW filters (1002 and 1004) are used for video and audio (Quasi Split Sound demodulation). For East Europe, one SAW filter (1003) is used for both (Intercarrier demodulation).

9.7.8 Protection Events

Several protection events are controlled by the UOC:

- **BC protection**, to protect the picture tube from a too high beam current. The UOC has the capability of measuring the normal back level current during the vertical flyback. So if for some reason the CRT circuit is malfunctioning (i.e. high beam current), the normal black current will be out of the 75 μA range, and the UOC will trigger the power supply to shut down. However, this is a high beam-current situation, the TV screen will be bright white before the set is shut down.
- **I2C protection**, to check whether all I^2C IC's are functioning.

In case one of these protections is activated, the set will go into 'standby'. The 'on' and 'standby' LEDs are controlled via the UOC.

9.8 Abbreviation list

2CS	2 Carrier (or Channel) Stereo
ACI	Automatic Channel Installation: algorithm that installs TV sets directly from cable network by means of a predefined TXT page
ADC	Analogue to Digital Converter
AFC	Automatic Frequency Control: control signal used to tune to the correct frequency
AFT	Automatic Fine Tuning
AGC	Automatic Gain Control: algorithm that controls the video input of the featurebox
AM	Amplitude Modulation
AP	Asia Pacific
AR	Aspect Ratio: 4 by 3 or 16 by 9
ATS	Automatic Tuning System
AV	External Audio Video
AVL	Automatic Volume Level
BC-PROT	Beam Current Protection
BCL	Beam Current Limitation
B/G	Monochrome TV system. Sound carrier distance is 5.5 MHz
BLC-INFORMATION	Black current informationrmation
BTSC	Broadcast Television Standard Committee. Multiplex FM stereo sound system, originating from the USA and used e.g. in LATAM and AP-NTSC countries
B-TXT	Blue teletext
CC	Closed Caption
ComPair	Computer aided rePair
CRT	Cathode Ray Tube or picture tube
CSM	Customer Service Mode
CTI	Colour Transient Improvement: manipulates steepness of chroma transients
CVBS	Composite Video Blanking and Synchronisation
DAC	Digital to Analogue Converter
DBE	Dynamic Bass Enhancement: extra low frequency amplification
DBX	Dynamic Bass Expander
D/K	Monochrome TV system. Sound carrier distance is 6.5 MHz
DFU	Direction For Use: description for the end user
DNR	Dynamic Noise Reduction
DSP	Digital Signal Processing
DST	Dealer Service Tool: special remote control designed for dealers to enter e.g. service mode
DVD	Digital Versatile Disc
EEPROM	Electrically Erasable and Programmable Read Only Memory
EHT	Extra High Tension
EHT-INFORMATION	Extra High Tension informationrmation
EU	Europe
EW	East West, related to horizontal deflection of the set
EXT	External (source), entering the set via SCART or Cinch
FBL	Fast Blanking: DC signal accompanying RGB signals
FILAMENT	Filament of CRT
FLASH	Flash memory
FM	Field Memory
FM	Frequency Modulation
HA	Horizontal Acquisition: horizontal sync pulse coming out of the HIP

HFB	Horizontal Flyback Pulse: horizontal sync pulse from large signal deflection
HP	Headphone
Hue	Colour phase control for NTSC (not the same as 'Tint')
I	Monochrome TV system. Sound carrier distance is 6.0 MHz
I2C	Integrated IC bus
IF	Intermediate Frequency
IIC	Integrated IC bus
Interlaced	Scan mode where two fields are used to form one frame. Each field contains half the number of the total amount of lines. The fields are written in "pairs", causing line flicker.
ITV	Institutional TV
LATAM	Latin America
LED	Light Emitting Diode
L/L'	Monochrome TV system. Sound carrier distance is 6.5 MHz. L' is Band I, L is all bands except for Band I
LNA	Low Noise Amplifier
LS	Large Screen
LS	Loudspeaker
LSP	Large signal panel
M/N	Monochrome TV system. Sound carrier distance is 4.5 MHz
MSP	Multistandard Sound Processor: ITT sound decoder
MUTE	Mute-Line
NC	Not Connected
NICAM	Near Instantaneous Compounded Audio Multiplexing. This is a digital sound system, mainly used in Europe.
NTSC	National Television Standard Committee. Colour system mainly used in North America and Japan. Colour carrier NTSC M/N = 3.579545 MHz, NTSC 4.43 = 4.433619 MHz (this is a VCR norm, it is not transmitted off-air)
NVM	Non Volatile Memory: IC containing TV related data e.g. alignments
OB	Option Byte
OC	Open Circuit
OSD	On Screen Display
PAL	Phase Alternating Line. Colour system mainly used in West Europe (colour carrier = 4.433619 MHz) and South America (colour carrier PAL M = 3.575612 MHz and PAL N = 3.582056 MHz)
PCB	Printed Circuit board
PIP	Picture In Picture
PLL	Phase Locked Loop. Used for e.g. FST tuning systems. The customer can give directly the desired frequency
POR	Power-On Reset
Progressive Scan	Scan mode where all scan lines are displayed in one frame at the same time, creating a double vertical resolution.
PTP	Picture Tube Panel (or CRT-panel)
RAM	Random Access Memory
RC	Remote Control handset
RC5	Remote Control system 5, signal from the remote control receiver
RGB	Red Green Blue
ROM	Read Only Memory
SAM	Service Alignment Mode
SAP	Second Audio Program
SC	Sandcastle: pulse derived from sync signals
S/C	Short Circuit
SCAVEM	Scan Velocity Modulation
SCL	Serial Clock
SDA	Serial Data
SDM	Service Default Mode
SECAM	SEequence Couleur Avec Memoire. Colour system mainly used in France and East Europe. Colour carriers = 4.406250 MHz and 4.250000 MHz
SIF	Sound Intermediate Frequency
SS	Small Screen
STBY	Standby
SVHS	Super Video Home System
SW	Software
THD	Total Harmonic Distortion
TXT	Teletext
µP	Microprocessor
UOC	Ultimate One Chip
VA	Vertical Acquisition
VBAT	Main supply voltage for the deflection stage (mostly 141 V)
V-chip	Violence Chip
VCR	Video Cassette Recorder
WYSIWYR	What You See Is What You Record: record selection that follows main picture and sound
XTAL	Quartz crystal
YC	Luminance (Y) and Chrominance (C) signal

10. Spare Parts List

Mono Carrier [A] and CRT Panel [B]

Various

0127	4822 265 11253	Fuse holder
0129	3139 120 10151	NTC holder
0136	4822 492 70788	IC fix
0137	4822 492 70289	IC fix
0138	4822 492 70788	IC fix
0139	3122 121 24785	Spring for bracket
0140	4822 492 70289	IC fix
0141	4822 492 70788	IC fix
0150	3139 131 00761	Cable 2p 560mm
0151	3104 311 02821	Cable 2p 560mm
0152	3104 301 09421	Cable 6p 400mm
0152	3104 311 04431	Cable 6p 480mm
0153	3104 311 04381	Cable 5p 560mm
0159	3104 311 02931	Cable 3p 400mm
0180	3104 311 03312	Cable 6p 680mm
0180	3139 131 01801	Cable 6p 680mm
0186	3104 311 02971	Cable 5p 560mm
0211	4822 265 20723	2p
0211	2422 025 16374	2p male
0212	4822 267 10774	2p male (red)
0214	4822 267 10734	5p
0219	2422 025 15849	6p male
0220	4822 265 30735	5p
0221	4822 267 10966	2p
0222	2422 025 10646	2p male
0224	4822 267 10982	2p
0231	2422 128 02972	Power switch
0235	4822 267 10771	42p female
0235	2422 025 16745	Scart 42p female
0239	2422 025 16382	3p male
0242	3139 131 00941	Cable 3p 560mm
0243	2422 025 04854	6p female
0244	4822 265 30735	5p
0245	2422 025 04854	6p female
0246	4822 267 10734	5p
0254	2422 500 80053	CRT 9p female
0254	2422 500 80076	CRT 9p female
0265	4822 267 10748	3p
0267	2422 025 16382	3p male
0268	4822 267 10735	3p
0278	4822 267 10735	3p
0278	2422 025 16382	3p male
0291	4822 267 10565	4p
1000	3139 147 17401	Tuner UR1316R/A I -3
1002	4822 242 81436	OFWK3953M
1004	2422 549 44341	Saw filter 38.9MHz OFWK9656M
1200	4822 242 81712	TPWA04B
1400	2422 132 07543	Relay 5A 12V LKS1AF-H10
1500	2422 086 10914	Fuse 4A 250V
1515	2422 132 07467	Relay 1p 12V 5A LKS1AF
1660	2422 543 01203	Crystal 12.00MHz
1831	4822 242 10769	18.432MHz

⊣⊢

2001	5322 122 32658	22pF 5% 50V
2002	5322 122 32658	22pF 5% 50V
2003	4822 122 33177	10nF 20% 50V
2004	4822 126 13751	47nF 10% 63V
2005	4822 124 40248	10µF 20% 63V
2006	4822 124 80791	470µF 20% 16V
2007	4822 126 14585	100nF 10% 50V
2008	4822 124 40207	100µF 20% 25V
2009	5322 122 32654	22nF 10% 63V
2010	5322 126 10511	1nF 5% 50V
2101	9965 000 10115	390pF 50V 10%
2102	9965 000 10115	390pF 50V 10%
2103	2020 552 96305	4.7µF 20-80% 10V
2104	9965 000 10115	390pF 50V 10%
2105	9965 000 10115	390pF 50V 10%
2106	2020 552 96305	4.7µF 20-80% 10V
2107	9965 000 10115	390pF 50V 10%
2108	9965 000 10115	390pF 50V 10%
2109	2020 552 96305	4.7µF 20-80% 10V
2110	9965 000 10115	390pF 50V 10%
2111	9965 000 10115	390pF 50V 10%
2112	2020 552 96305	4.7µF 20-80% 10V
2113	5322 122 32658	22pF 5% 50V
2114	5322 122 32658	22pF 5% 50V
2115	5322 122 32658	22pF 5% 50V
2116	5322 122 32658	22pF 5% 50V
2117	5322 122 32658	22pF 5% 50V
2118	5322 122 32658	22pF 5% 50V
2120	5322 122 32658	22pF 5% 50V
2131	9965 000 10115	390pF 50V 10%
2132	9965 000 10115	390pF 50V 10%
2133	2020 552 96305	4.7µF 20-80% 10V
2134	9965 000 10115	390pF 50V 10%
2135	9965 000 10115	390pF 50V 10%
2136	2020 552 96305	4.7µF 20-80% 10V
2137	9965 000 10115	390pF 50V 10%
2138	9965 000 10115	390pF 50V 10%
2139	2020 552 96305	4.7µF 20-80% 10V
2140	9965 000 10115	390pF 50V 10%
2141	9965 000 10115	390pF 50V 10%
2142	2020 552 96305	4.7µF 20-80% 10V
2143	5322 122 31863	330pF 5% 63V
2144	5322 122 31863	330pF 5% 63V
2145	5322 122 32658	22pF 5% 50V
2147	5322 122 32658	22pF 5% 50V
2151	5322 122 31863	330pF 5% 63V
2152	2020 552 96305	4.7µF 20-80% 10V
2153	5322 122 31863	330pF 5% 63V
2154	2020 552 96305	4.7µF 20-80% 10V
2161	4822 124 12392	47µF 20% 16V
2171	4822 126 13682	100pF 5% 1kV
2172	4822 126 12263	220pF 10% 1kV
2174	4822 122 31177	470pF 10% 500V
2175	2020 021 91577	470µF 20% 16V
2184	2020 552 96305	4.7µF 20-80% 10V
2201	4822 126 14585	100nF 10% 50V
2202	4822 126 14585	100nF 10% 50V
2203	4822 126 14585	100nF 10% 50V
2204	4822 126 14585	100nF 10% 50V
2205	4822 126 14076	220nF 25V
2206	4822 126 13693	56pF 1% 63V
2207	5322 126 10184	820pF 5% 50V 3
2208	4822 126 14585	100nF 10% 50V
2209	4822 124 40248	10µF 20% 63V
2210	4822 126 14043	1µF 20-80% 16V
2211	4822 126 13482	470nF 80/20% 16V
2213	5322 122 32654	22nF 10% 63V
2214	5322 122 32654	22nF 10% 63V
2215	5322 122 32654	22nF 10% 63V
2216	4822 124 81144	1000µF 16V
2216	2020 012 93728	2200µF 20% 10V
2217	5322 122 32654	22nF 10% 63V
2219	4822 126 14076	220nF 25V
2220	4822 121 51252	470nF 5% 63V
2221	5322 122 32654	22nF 10% 63V
2230	4822 124 40769	4.7µF 20% 100V
2234	4822 126 14585	100nF 10% 50V
2238	5322 126 10511	1nF 5% 50V
2239	5322 126 10511	1nF 5% 50V
2240	5322 126 10511	1nF 5% 50V
2241	4822 126 13344	1.5nF 5% 63V
2242	4822 126 14043	1µF 20-80% 16V
2243	4822 122 33177	10nF 20% 50V
2244	5322 121 42386	100nF 5% 63V
2245	4822 126 14076	220nF 25V
2245	4822 126 14107	330nF 20-80% 25V
2247	4822 124 81144	1000µF 16V
2247	2020 012 93728	2200µF 20% 10V
2248	5322 122 32654	22nF 10% 63V
2249	5322 122 32654	22nF 10% 63V
2250	4822 124 22652	2.2µF 20% 50V
2252	5322 126 10511	1nF 5% 50V
2253	5322 126 10511	1nF 5% 50V
2254	4822 051 20008	Jumper
2330	4822 121 51473	470nF 20% 63V
2340	4822 124 11565	10µF 20% 250V
2341	4822 126 13599	3.3nF 10% 500V
2342	5322 116 80853	560pF 5% 63V
2343	4822 126 13451	2.2nF 10% 2kV
2343	4822 126 12278	3300pF10% 2kV
2344	4822 051 20008	Jumper
2345	4822 122 31175	1nF 10% 500V
2346	4822 126 13435	1.2nF 10% 2kV
2346	4822 126 14237	470pF 10% 2kV
2360	4822 124 40764	22µF 100V
2361	4822 124 40207	100µF 20% 25V
2365	4822 121 40516	22nF 10% 250V
2366	4822 121 40334	100nF 10% 100V
2367	5322 122 33861	120pF10% 50V
2367	5322 122 33538	150pF 2% 63V
2367	4822 126 10326	180pF 5% 63V
2368	5322 122 32654	22nF 10% 63V
2373	4822 126 13693	56pF 1% 63V
2375	5322 122 31863	330pF 5% 63V
2376	4822 126 14585	100nF 10% 50V
2377	4822 126 14585	100nF 10% 50V
2401	4822 124 12438	2.2µF 20% 100V
2401	5322 124 41379	2.2µF 20% 50V
2402	4822 122 31177	470pF 10% 500V
2404	4822 124 41751	47µF 20% 50V
2405	4822 124 40196	220µF 20% 16V
2405	4822 124 80875	220µF 20% 25V
2420	4822 126 14043	1µF 20-80% 16V
2421	5322 122 32268	470pF 5% 63V
2441	4822 124 21913	1µF 20% 63V
2443	4822 126 13751	47nF 10% 63V
2444	4822 124 21913	1µF 20% 63V
2450	4822 124 11575	47µF 20% 160V
2451	4822 121 51305	15nF 10% 50V
2451	4822 121 41856	22nF 5% 250V
2452	4822 126 10326	180pF 5% 63V
2454	2222 479 90133	68nF 5% 250V
2455	4822 124 40433	47µF 20% 25V
2457	4822 121 42365	330nF 5% 250V
2457	4822 121 10781	470nF 5% 250V
2458	4822 124 12438	2.2µF 20% 100V
2459	4822 126 13185	680pF10% 500V
2460	5322 122 32531	100pF 5% 50V
2463	4822 126 14237	470pF 10% 2kV
2463	4822 126 14138	680pF 10% 2kV
2464	4822 121 10739	2.2µF 5% 160V
2465	4822 121 70618	12nF 5% 1600V
2465	4822 121 70637	8.2nF 5% 1600V
2466	4822 121 40483	10nF 10% 400V
2466	2222 347 90219	15nF 10% 400V
2467	2222 375 90424	9.1nF 5% 1kV
2468	5322 121 42532	18nF 10% 400V
2468	2222 375 90424	9.1nF 5% 1kV
2469	4822 126 14096	560nF 5% 250V
2471	5322 121 42386	100nF 5% 63V
2472	4822 121 41854	150nF 5% 63V
2473	5322 121 42386	100nF 5% 63V
2474	4822 122 33127	2.2nF 10% 63V
2475	4822 122 33127	2.2nF 10% 63V
2476	5322 126 10223	4.7nF 10% 63V
2480	5322 121 10472	47µF
2481	4822 122 31177	470pF 10% 500V
2482	4822 121 51408	33nF 10% 250V
2482	4822 121 40482	68nF 10% 250V
2485	4822 124 12265	4.7µF 20% 250V
2486	2020 021 91577	470µF 20% 16V
2487	4822 124 80604	47µF 20% 50V
2488	4822 124 81145	16V 20% 1000µF
2489	2020 021 91577	470µF 20% 16V
2490	4822 124 12438	2.2µF 20% 100V
2491	4822 122 31175	1nF 10% 500V
2493	2222 347 90219	15nF 10% 400V
2500	4822 126 13589	470nF 275V
2501	4822 126 14153	2.2nF 10% 1kV
2502	4822 126 14153	2.2nF 10% 1kV
2503	4822 124 12415	220µF 20% 400V
2505	4822 126 14153	2.2nF 10% 1kV
2505	4822 126 13599	3.3nF 10% 500V
2506	4822 121 10798	33nF 5% 400V
2507	5322 122 34099	470pF 10% 63V
2508	4822 122 50116	470pF 10% 1kV
2509	4822 121 10711	100nF 20% 275V
2515	4822 126 14049	1.5nF 20% 250V
2516	4822 126 14208	220pF 20% 250V
2516	4822 126 13867	330P 20% 250V
2520	4822 126 14585	100nF 10% 50V
2520	4822 122 33177	10nF 20% 50V
2521	4822 124 81151	22µF 50V
2522	4822 126 14585	100nF 10% 50V
2523	4822 126 13862	1.5nF 10% 2kV
2525	5322 122 34099	470pF 10% 63V
2526	4822 126 13482	470nF 80/20% 16V
2527	4822 122 33127	2.2nF 10% 63V
2528	5322 122 31647	1nF 10% 63V
2540	4822 122 33177	10nF 20% 50V
2541	4822 122 33177	10nF 20% 50V
2560	4822 126 14152	680pF 10% 1kV
2561	2020 021 91496	100µF 20% 160V
2562	5322 122 32331	1nF 10% 100V
2563	5322 121 42386	100nF 5% 63V
2564	4822 124 12417	2200µF 20% 25V
2564	2020 021 91374	ELECTROLYTICPM25V.S220
2567	4822 124 40433	47µF 20% 25V
2568	4822 124 21913	1µF 20% 63V
2580	4822 124 81286	47µF 20% 16V
2581	4822 124 81151	22µF 50V
2601	4822 126 14076	220nF 25V
2602	5322 122 32531	100pF 5% 50V
2604	4822 124 40248	10µF 20% 63V

2606	5322 122 31647	1nF 10% 63V
2607	2238 861 18339	33P 1% 50V
2608	4822 126 14043	1µF 20-80% 16V
2609	2238 861 18339	33P 1% 50V
2611	4822 126 14043	1µF 20-80% 16V
2612	4822 126 13694	68pF 1% 63V
2613	4822 126 13694	68pF 1% 63V
2615	5322 122 31647	1nF 10% 63V
2618	4822 126 14043	1µF 20-80% 16V
2619	4822 126 14043	1µF 20-80% 16V
2691	4822 124 40248	10µF 20% 63V
2801	4822 124 40207	100µF 20% 25V
2801	4822 124 81151	22µF 50V
2802	4822 126 14076	220nF 25V
2802	2020 552 96305	4.7µF 20-80% 10V
2803	2020 552 96305	4.7µF 20-80% 10V
2804	2020 552 96305	4.7µF 20-80% 10V
2805	2020 552 96305	4.7µF 20-80% 10V
2811	2020 552 96305	4.7µF 20-80% 10V
2823	4822 124 40207	100µF 20% 25V
2824	2020 552 96305	4.7µF 20-80% 10V
2831	5322 122 32447	1pF 5% 63V
2832	5322 122 32447	1pF 5% 63V
2833	4822 126 13692	47pF 1% 63V
2834	5322 122 32268	470pF 5% 63V
2835	4822 122 33575	220pF 5% 63V
2836	4822 126 13344	1.5nF 5% 63V
2837	4822 124 40769	4.7µF 20% 100V
2840	4822 126 14585	100nF 10% 50V
2841	4822 124 40248	10µF 20% 63V
2842	4822 126 14585	100nF 10% 50V
2843	4822 124 40248	10µF 20% 63V
2844	4822 124 40248	10µF 20% 63V
2845	4822 126 14585	100nF 10% 50V
2846	4822 124 40207	100µF 20% 25V
2849	5322 126 10511	1nF 5% 50V
2850	5322 126 10511	1nF 5% 50V
2851	2020 552 96305	4.7µF 20-80% 10V
2851	4822 051 20008	Jumper
2852	5322 126 10511	1nF 5% 50V
2853	2020 552 96305	4.7µF 20-80% 10V
2853	4822 051 20008	Jumper
2854	5322 126 10511	1nF 5% 50V
2855	4822 122 30045	27pF 2% 100V
2856	4822 126 13486	15pF 2% 63V
2857	5322 122 33538	150pF 2% 63V
2858	5322 126 10511	1nF 5% 50V
2859	5322 126 10511	1nF 5% 50V
2860	4822 126 13693	56pF 1% 63V
2862	2020 552 96305	4.7µF 20-80% 10V
2887	4822 122 33177	10nF 20% 50V
2894	4822 122 33575	220pF 5% 63V
2895	5322 116 80853	560pF 5% 63V
2897	4822 122 33172	390pF 5% 50V
2898	4822 122 33177	10nF 20% 50V
2902	4822 124 81144	1000µF 16V
2902	4822 124 80061	1000µF 20% 25V
2903	4822 124 21913	1µF 20% 63V
2904	4822 126 13482	470nF 80/20% 16V
2905	5322 122 31647	1nF 10% 63V
2905	5322 116 80853	560pF 5% 63V
2906	4822 126 13482	470nF 80/20% 16V
2907	5322 122 31647	1nF 10% 63V
2907	5322 116 80853	560pF 5% 63V
2908	4822 124 40248	10µF 20% 63V
2910	5322 122 31647	1nF 10% 63V
2910	4822 122 33891	3.3nF 10% 63V
2911	5322 122 31647	1nF 10% 63V
2911	4822 122 33891	3.3nF 10% 63V
2950	5322 122 31863	330pF 5% 63V

3000	4822 116 52175	100Ω 5% 0.5W
3001	4822 116 52175	100Ω 5% 0.5W
3002	4822 117 10833	10kΩ 1% 0.1W
3002	4822 051 20008	Jumper
3003	4822 117 11139	1.5kΩ 1% 0.1W
3005	4822 116 52175	100Ω 5% 0.5W
3006	4822 117 11449	2.2kΩ 5% 0.1W
3007	4822 117 11507	6.8kΩ 1% 0.1W
3008	4822 117 11449	2.2kΩ 5% 0.1W
3010	4822 117 13577	330Ω 1% 1.25W
3101	4822 116 83868	150Ω 5% 0.5W
3102	3198 021 52240	220kΩ 5%
3103	4822 116 83868	150Ω 5% 0.5W
3104	4822 117 10834	47kΩ 1% 0.1W
3105	4822 116 83868	150Ω 5% 0.5W
3106	3198 021 52240	220kΩ 5%
3107	4822 116 83868	150Ω 5% 0.5W
3108	4822 117 10834	47kΩ 1% 0.1W
3109	4822 116 52201	75Ω 5% 0.5W
3110	4822 116 52175	100Ω 5% 0.5W
3111	4822 116 52264	27kΩ 5% 0.5W
3112	4822 117 11507	6.8kΩ 1% 0.1W
3113	4822 116 52201	75Ω 5% 0.5W
3114	4822 116 52175	100Ω 5% 0.5W
3115	4822 116 52201	75Ω 5% 0.5W
3116	4822 116 52175	100Ω 5% 0.5W
3117	4822 116 52201	75Ω 5% 0.5W
3118	4822 116 52175	100Ω 5% 0.5W
3119	4822 116 52199	68Ω 5% 0.5W
3120	4822 051 10102	1kΩ 2% 0.25W
3131	4822 116 83868	150Ω 5% 0.5W
3132	3198 021 52240	220kΩ 5%
3133	4822 116 83868	150Ω 5% 0.5W
3134	4822 117 10834	47kΩ 1% 0.1W
3135	4822 116 83868	150Ω 5% 0.5W
3136	3198 021 52240	220kΩ 5%
3137	4822 116 83868	150Ω 5% 0.5W
3138	4822 117 10834	47kΩ 1% 0.1W
3139	4822 116 52264	27kΩ 5% 0.5W
3140	4822 117 11507	6.8kΩ 1% 0.1W
3141	4822 116 52201	75Ω 5% 0.5W
3142	4822 116 52175	100Ω 5% 0.5W
3143	4822 116 52199	68Ω 5% 0.5W
3144	4822 051 10102	1kΩ 2% 0.25W
3151	4822 116 83868	150Ω 5% 0.5W
3152	3198 021 52240	220kΩ 5%
3153	4822 116 83868	150Ω 5% 0.5W
3154	3198 021 52240	220kΩ 5%
3155	4822 116 52195	47Ω 5% 0.5W
3171	4822 050 11204	120kΩ 1% 0.4W
3172	4822 116 83961	6.8kΩ 5%
3173	4822 116 52297	68kΩ 5% 0.5W
3174	4822 116 52297	68kΩ 5% 0.5W
3176	4822 052 11108	1Ω 5% 0.5W
3200	4822 116 83881	390Ω 5% 0.5W
3201	4822 116 52175	100Ω 5% 0.5W
3202	4822 116 52175	100Ω 5% 0.5W
3203	4822 116 52175	100Ω 5% 0.5W
3204	4822 116 52257	22kΩ 5% 0.5W
3206	4822 051 20124	120kΩ 5% 0.1W
3206	4822 051 20154	150kΩ 5% 0.1W
3206	3198 021 52240	220kΩ 5%
3207	4822 050 11002	1kΩ 1% 0.4W
3208	4822 117 11503	220Ω 1% 0.1W
3209	4822 117 12521	68Ω 1% 0.1W
3212	4822 051 20471	470Ω 5% 0.1W
3213	4822 051 20561	560Ω 5% 0.1W
3214	4822 116 52175	100Ω 5% 0.5W
3217	4822 051 20334	330kΩ 5% 0.1W
3218	4822 117 11149	82kΩ 1% 0.1W
3219	4822 117 11449	2kΩ2 5% 0.1W
3223	4822 117 11373	100Ω 1%
3226	4822 051 20561	560Ω 5% 0.1W
3229	4822 117 11454	820Ω 1% 0.1W
3230	4822 117 11504	270Ω 1% 0.1W
3231	4822 051 20561	560Ω 5% 0.1W
3233	4822 117 11454	820Ω 1% 0.1W
3235	4822 116 52175	100Ω 5% 0.5W
3236	4822 051 20154	150kΩ 5% 0.1W
3237	4822 051 20122	1kΩ20 5% 0.1W
3238	4822 051 20561	560Ω 5% 0.1W
3239	4822 117 11504	270Ω 1% 0.1W
3240	4822 117 10837	100kΩ 1% 0.1W
3241	4822 051 20223	22kΩ 5% 0.1W
3242	4822 117 11383	12kΩ 1% 0.1W
3244	4822 116 52231	820Ω 5% 0.5W
3245	4822 117 12708	39kΩ 1% 0.1W
3245	4822 051 20393	39kΩ 5% 0.1W
3246	4822 117 10833	10kΩ 1% 0.1W
3247	2120 108 92641	180kΩ 1%
3247	4822 051 20564	560kΩ 5% 0.1W
3248	4822 051 20333	33kΩ 5% 0.1W
3249	4822 116 52231	820Ω 5% 0.5W
3250	4822 050 11002	1kΩ 1% 0.4W
3250	4822 116 52303	8.2kΩ 5% 0.5W
3251	4822 116 52175	100Ω 5% 0.5W
3256	4822 051 10102	1kΩ 2% 0.25W
3257	4822 051 20106	10M Ω 5% 0.1W
3257	4822 051 20105	1M Ω 5% 0.1W
3258	4822 117 10837	100kΩ 1% 0.1W
3258	2120 108 92641	180kΩ 1%
3258	4822 051 20274	270kΩ 5% 0.1W
3259	4822 051 20475	4.7M Ω 5% 0.1W
3259	4822 051 20474	470kΩ 5% 0.1W
3270	4822 051 20008	Jumper
3331	4822 116 52175	100Ω 5% 0.5W
3332	3198 013 01020	1kΩ 20% 0.5W
3333	4822 116 52175	100Ω 5% 0.5W
3334	3198 013 01020	1kΩ 20% 0.5W
3335	4822 116 52175	100Ω 5% 0.5W
3336	3198 013 01020	1kΩ 20% 0.5W
3340	4822 052 11109	10Ω 5% 0.5W
3341	4822 052 10108	1Ω 5% 0.33W
3342	4822 052 10108	1Ω 5% 0.33W
3343	3198 013 01520	1.5kΩ 20% 0.5W
3344	4822 116 52186	22Ω 5% 0.5W
3344	4822 116 52191	33Ω 5% 0.5W
3345	4822 117 13016	1mA/50V max 115V
3346	4822 116 52186	22Ω 5% 0.5W
3346	4822 116 52191	33Ω 5% 0.5W
3347	4822 051 10102	1kΩ 2% 0.25W
3348	4822 051 10102	1kΩ 2% 0.25W
3350	4822 051 10102	1kΩ 2% 0.25W
3351	4822 051 10102	1kΩ 2% 0.25W
3353	4822 051 10102	1kΩ 2% 0.25W
3354	4822 051 10102	1kΩ 2% 0.25W
3360	4822 117 13424	8.2kΩ 5% 5W
3362	4822 052 10109	10Ω 5% 0.33W
3363	4822 116 52231	820Ω 5% 0.5W
3364	4822 116 80176	1Ω 5% 0.5W
3364	4822 116 81039	1.8Ω 5% 0.5W
3368	4822 117 12955	2.7kΩ 1% 0.1W
3369	4822 117 10833	10kΩ 1% 0.1W
3370	4822 117 11503	220Ω 1% 0.1W
3371	4822 051 20472	4.7kΩ 5% 0.1W
3373	4822 117 11503	220Ω 1% 0.1W
3374	4822 116 52291	56kΩ 5% 0.5W
3375	4822 116 83868	150Ω 5% 0.5W
3375	4822 116 83872	220Ω 5% 0.5W
3376	4822 051 20008	Jumper
3377	4822 050 24708	4.7Ω 1% 0.6W
3378	4822 117 11148	56kΩ 1% 0.1W
3379	4822 051 20472	4.7kΩ 5% 0.1W
3382	4822 117 11139	1.5kΩ 1% 0.1W
3383	4822 051 20471	470Ω 5% 0.1W
3384	4822 117 11454	820Ω 1% 0.1W
3385	4822 116 80176	1Ω 5% 0.5W
3385	4822 116 81039	1.8Ω 5% 0.5W
3386	4822 051 20472	4.7kΩ 5% 0.1W
3387	4822 051 20471	470Ω 5% 0.1W
3390	4822 051 20109	10Ω 5% 0.1W
3391	4822 051 20109	10Ω 5% 0.1W
3392	4822 117 11373	100Ω 1%
3392	4822 117 11503	220Ω 1% 0.1W
3393	4822 051 20472	4.7kΩ 5% 0.1W
3400	4822 116 52219	330Ω 5% 0.5W
3401	4822 116 83874	220kΩ 5% 0.5W
3401	4822 116 52257	22kΩ 5% 0.5W
3401	4822 050 23303	33kΩ 1% 0.6W
3403	4822 116 52234	100kΩ 5% 0.5W
3403	4822 116 52297	68kΩ 5% 0.5W
3403	4822 116 52304	82kΩ 5% 0.5W
3404	4822 050 11002	1kΩ 1% 0.4W
3405	4822 050 24708	4.7Ω 1% 0.6W
3406	4822 050 24708	4.7Ω 1% 0.6W
3407	4822 050 24708	4.7Ω 1% 0.6W
3408	4822 116 52175	100Ω 5% 0.5W
3408	4822 050 21003	10kΩ 1% 0.6W
3410	4822 050 21003	10kΩ 1% 0.6W
3411	4822 052 10478	4.7Ω 5% 0.33W
3441	4822 117 11373	100Ω 1%
3442	4822 051 20008	Jumper
3443	4822 051 20105	1M Ω 5% 0.1W
3445	4822 116 52244	15kΩ 5% 0.5W
3446	4822 116 52289	5.6kΩ 5% 0.5W
3447	4822 116 52213	180Ω 5% 0.5W
3448	4822 116 52231	820Ω 5% 0.5W
3449	4822 116 52199	68Ω 5% 0.5W
3450	4822 116 52191	33Ω 5% 0.5W
3451	4822 052 10109	10Ω 5% 0.33W
3452	4822 050 24703	47kΩ 1% 0.6W
3453	4822 050 11002	1kΩ 1% 0.4W
3454	4822 050 21503	15kΩ 1% 0.6W
3455	4822 053 11688	6.8Ω 5% 2W
3456	4822 051 20008	Jumper
3457	4822 051 20008	Jumper
3458	4822 050 11002	1kΩ 1% 0.4W
3459	4822 053 11153	15kΩ 5% 2W
3460	4822 116 52276	3.9kΩ 5% 0.5W
3463	4822 116 52191	33Ω 5% 0.5W
3465	2312 915 12203	22kΩ 1%
3465	4822 050 22703	27kΩ 1% 0.6W
3465	4822 050 25603	56kΩ 1% 0.6W
3468	4822 116 52213	180Ω 5% 0.5W
3469	4822 116 52269	3.3kΩ 5% 0.5W
3470	2120 108 92641	180kΩ 1%
3470	4822 051 20274	270kΩ 5% 0.1W
3470	4822 051 20334	330kΩ 5% 0.1W
3470	4822 051 20474	470kΩ 5% 0.1W
3471	4822 050 22202	2.2kΩ 1% 0.6W
3471	4822 050 23308	3.3Ω 1% 0.6W
3471	4822 050 23908	3.9Ω 1% 0.6W
3471	4822 050 25608	5.6Ω 1% 0.6W
3472	4822 050 23308	3.3Ω 1% 0.6W
3472	4822 050 25608	5.6Ω 1% 0.6W
3473	4822 050 23308	3.3Ω 1% 0.6W
3473	4822 050 23908	3.9Ω 1% 0.6W
3473	4822 050 25608	5.6Ω 1% 0.6W

3474	4822 050 22202	2.2kΩ 1% 0.6W
3475	4822 050 22202	2.2kΩ 1% 0.6W
3477	4822 116 83868	150Ω 5% 0.5W
3478	4822 116 83868	150Ω 5% 0.5W
3479	4822 117 12955	2.7kΩ 1% 0.1W
3480	4822 116 80676	1.5Ω 5% 0.5W
3481	4822 050 21503	15kΩ 1% 0.6W
3481	2312 915 12203	22kΩ 1%
3481	4822 050 22703	27kΩ 1% 0.6W
3482	4822 050 23902	3.9kΩ 1% 0.6W
3482	4822 050 23901	390Ω 1% 0.6W
3482	2312 915 15602	5kΩ6 1%
3484	4822 116 52276	3.9kΩ 5% 0.5W
3486	4822 053 12229	22Ω 5% 3W
3486	4822 053 12339	33Ω 5% 3W
3488	4822 052 11478	4.7Ω 5% 0.5W
3489	4822 116 52276	3.9kΩ 5% 0.5W
3490	4822 116 52303	8.2kΩ 5% 0.5W
3491	4822 117 10833	10kΩ 1% 0.1W
3491	4822 051 20332	3.3kΩ 5% 0.1W
3492	4822 051 10102	1kΩ 2% 0.25W
3492	4822 117 13577	330Ω 1% 1.25W
3493	4822 052 10688	6.8Ω 5% 0.33W
3494	4822 052 11478	4.7Ω 5% 0.5W
3495	4822 051 20223	22kΩ 5% 0.1W
3496	4822 117 10837	100kΩ 1% 0.1W
3497	4822 117 10837	100kΩ 1% 0.1W
3498	4822 117 11383	12kΩ 1% 0.1W
3500	4822 053 21335	3.3M Ω 5% 0.5W
3501	4822 053 21335	3.3M Ω 5% 0.5W
3504	4822 116 10105	PTC 9Ω 220V
3506	4822 053 21155	1.5Ω 5% 0.5W
3507	4822 252 11215	Spark gap
3508	4822 116 83872	220Ω 5% 0.5W
3509	3198 013 04710	470Ω 20% 0.5W
3510	4822 117 12765	4.7Ω 20% 3W
3519	4822 116 83876	270Ω 5% 0.5W
3520	4822 051 20122	1.2kΩ 5% 0.1W
3521	4822 116 52186	22Ω 5% 0.5W
3521	4822 050 24708	4.7Ω 1% 0.6W
3522	2322 734 63004	300kΩ 1%
3522	4822 051 20334	330kΩ 5% 0.1W
3522	4822 051 20394	390kΩ 5% 0.1W
3523	4822 052 10479	47Ω 5% 0.33W
3524	4822 117 11148	56kΩ 1% 0.1W
3525	4822 051 10102	1kΩ 2% 0.25W
3526	3198 012 11570	0.15Ω 5% 1W
3526	4822 117 11744	0.22Ω 5% 1W
3527	4822 117 11744	0.22Ω 5% 1W
3528	4822 051 20109	10Ω 5% 0.1W
3528	4822 051 20008	Jumper
3529	4822 117 10834	47kΩ 1% 0.1W
3530	4822 117 10833	10kΩ 1% 0.1W
3531	4822 051 20472	4.7kΩ 5% 0.1W
3532	4822 052 10222	2.2kΩ 5% 0.33W
3541	4822 051 20471	470Ω 5% 0.1W
3542	4822 117 11139	1.5kΩ 1% 0.1W
3543	4822 050 28203	82kΩ 1% 0.6W
3544	2120 108 92624	4.7kΩ1%
3545	4822 051 20274	270kΩ 5% 0.1W
3545	4822 051 20393	39kΩ 5% 0.1W
3548	4822 116 83933	15kΩ 1% 0.1W
3552	4822 051 20472	4.7kΩ 5% 0.1W
3557	4822 051 10102	1kΩ 2% 0.25W
3557	4822 117 11139	1.5kΩ 1% 0.1W
3561	4822 116 52213	180Ω 5% 0.5W
3561	4822 116 83872	220Ω 5% 0.5W
3562	4822 117 11383	12kΩ 1% 0.1W
3562	4822 116 83933	15kΩ 1% 0.1W
3562	4822 051 20822	8.2kΩ 5% 0.1W
3563	4822 051 20472	4.7kΩ 5% 0.1W
3563	4822 051 20822	8.2kΩ 5% 0.1W
3564	2120 106 90565	0.1Ω 5%
3565	4822 053 10221	220Ω 5% 1W
3565	4822 053 10331	330Ω 5% 1W
3566	4822 117 11449	2kΩ2 5% 0.1W
3569	4822 051 20562	5.6kΩ 5% 0.1W
3580	4822 117 10834	47kΩ 1% 0.1W
3594	4822 117 13577	330Ω 1% 1.25W
3595	3198 021 52240	220kΩ 5%
3596	3198 021 52240	220kΩ 5%
3603	4822 116 52175	100Ω 5% 0.5W
3604	4822 116 52175	100Ω 5% 0.5W
3605	4822 051 20472	4.7kΩ 5% 0.1W
3606	4822 116 52256	2kΩ2 5% 0.5W
3607	4822 116 52256	2kΩ2 5% 0.5W
3608	4822 116 52175	100Ω 5% 0.5W
3609	4822 050 21003	10kΩ 1% 0.6W
3610	4822 116 52303	8.2kΩ 5% 0.5W
3611	4822 117 11373	100Ω 1%
3612	4822 116 52303	8.2kΩ 5% 0.5W
3614	4822 116 52283	4.7kΩ 5% 0.5W
3615	4822 050 21003	10kΩ 1% 0.6W
3617	4822 116 52283	4.7kΩ 5% 0.5W
3618	4822 050 21003	10kΩ 1% 0.6W
3618	4822 116 83961	6.8kΩ 5%
3619	4822 116 52303	8.2kΩ 5% 0.5W
3622	4822 117 11373	100Ω 1%
3623	4822 051 20472	4.7kΩ 5% 0.1W
3624	4822 116 52175	100Ω 5% 0.5W
3625	4822 116 52175	100Ω 5% 0.5W
3626	4822 051 20472	4.7kΩ 5% 0.1W
3627	4822 051 20472	4.7kΩ 5% 0.1W
3628	4822 117 10833	10kΩ 1% 0.1W
3630	4822 117 11449	2kΩ2 5% 0.1W
3632	4822 051 20008	Jumper
3634	4822 116 52175	100Ω 5% 0.5W
3635	4822 116 52175	100Ω 5% 0.5W
3636	4822 117 11373	100Ω 1%
3638	4822 117 11927	75Ω 1% 0.1W
3640	4822 116 52175	100Ω 5% 0.5W
3691	4822 117 13577	330Ω 1% 1.25W
3692	4822 051 10102	1kΩ 2% 0.25W
3693	4822 117 11503	220Ω 1% 0.1W
3694	4822 051 20472	4.7kΩ 5% 0.1W
3801	4822 116 83872	220Ω 5% 0.5W
3802	4822 050 11002	1kΩ 1% 0.4W
3802	4822 116 83872	220Ω 5% 0.5W
3803	4822 117 10837	100kΩ 1% 0.1W
3803	4822 051 20124	120kΩ 5% 0.1W
3804	3198 021 52240	220kΩ 5%
3804	4822 117 11149	82kΩ 1% 0.1W
3805	4822 051 10102	1kΩ 2% 0.25W
3806	4822 117 10837	100kΩ 1% 0.1W
3806	4822 051 20124	120kΩ 5% 0.1W
3807	3198 021 52240	220kΩ 5%
3807	4822 117 11149	82kΩ 1% 0.1W
3808	4822 050 11002	1kΩ 1% 0.4W
3809	4822 117 11927	75Ω 1% 0.1W
3810	4822 117 11927	75Ω 1% 0.1W
3811	4822 051 20471	470Ω 5% 0.1W
3812	4822 051 20564	560kΩ 5% 0.1W
3813	4822 117 10837	100kΩ 1% 0.1W
3814	4822 117 10837	100kΩ 1% 0.1W
3815	4822 117 11503	220Ω 1% 0.1W
3831	4822 117 10834	47kΩ 1% 0.1W
3832	4822 116 52175	100Ω 5% 0.5W
3833	4822 116 52175	100Ω 5% 0.5W
3837	4822 117 11373	100Ω 1%
3839	4822 117 11373	100Ω 1%
3840	4822 051 20472	4.7kΩ 5% 0.1W
3841	4822 051 20822	8.2kΩ 5% 0.1W
3842	4822 051 10102	1kΩ 2% 0.25W
3844	4822 117 11373	100Ω 1%
3845	4822 117 11373	100Ω 1%
3849	4822 051 20471	470Ω 5% 0.1W
3861	4822 117 10833	10kΩ 1% 0.1W
3901	4822 051 10102	1kΩ 2% 0.25W
3901	4822 117 11507	6.8kΩ 1% 0.1W
3902	4822 051 20332	3.3kΩ 5% 0.1W
3903	4822 051 20332	3.3kΩ 5% 0.1W
3903	4822 117 11149	82kΩ 1% 0.1W
3904	4822 117 10833	10kΩ 1% 0.1W
3905	4822 051 20332	3.3kΩ 5% 0.1W
3905	4822 117 11149	82kΩ 1% 0.1W
3906	4822 117 10833	10kΩ 1% 0.1W
3907	4822 117 11507	6.8kΩ 1% 0.1W
3909	4822 051 20273	27kΩ 5% 0.1W
3910	4822 051 20273	27kΩ 5% 0.1W
3912	4822 116 52231	820Ω 5% 0.5W
4xxx	4822 051 10008	0Ω 5% 0.25W (1206)
4xxx	4822 051 20008	0Ω 5% 0.25W (0805)

5001	4822 157 51216	5.6µH
5002	2422 535 94639	10µH 20%
5003	4822 157 11866	1.8µH 10%
5180	4822 157 71401	27µH
5201	4822 157 11868	2.7µH 5%
5204	4822 157 11411	100mH z
5205	4822 157 11411	100mH z
5206	4822 157 11411	100mH z
5242	4822 157 11706	10µH 5%
5342	4822 157 50961	22µH
5342	4822 156 21125	3.9µH 10%
5343	2722 122 00333	Delay line 160ns SDL-4893
5344	2722 122 00333	Delay line 160ns SDL-4893
5345	2722 122 00333	Delay line 160ns SDL-4893
5360	4822 157 51216	5.6µH
5400	2422 535 91027	Choke coil 11.7mHz 8.4Ω C906-0
5401	4822 157 11885	1000µH 5%
5445	2422 531 02464	LOT 1342.0033C
5445	3128 138 21411	Transformer LOT PSLOT 29"RF
5445	3128 138 21921	Transformer LOT PSLOT OV2076
5451	4822 157 11737	22µH 10%
5451	4822 157 11869	33µH 10%
5452	4822 157 11411	100mHz
5457	2422 535 91028	Linearity coil 25µH C907-01
5457	4822 157 11076	Linearity coil 25µH C907-01
5457	4822 157 11671	Linearity drum coil
5461	2422 536 00181	Transformer driver SRW0913DR-T
5461	2422 531 02465	Transformer sig driver SC10015
5463	2422 536 00048	Bridge coil C957-02
5463	4822 157 11711	Choke coil
5464	2422 531 02419	Bridge coil C946-01
5471	3198 018 73380	3.3µH 20%
5471	2422 535 94638	6.8µH 20%
5472	4822 157 51157	3.3µH
5480	4822 157 50961	22µH
5480	4822 156 20915	33µH
5480	5322 157 51687	39µH
5500	4822 157 10476	DMF-2820H
5501	4822 157 11523	DMF-2405
5502	2422 549 45296	Mains harmonic filter 38mH
5502	2422 549 44694	Mains harmonic filter 65mH
5520	3128 138 39721	Transformer CT425V
5520	2422 531 02544	Transformer POW LAYER PSS42-11
5520	2422 531 02539	Transformer SS42030-03
5521	4822 526 10704	Bead 100mHz
5560	4822 526 10704	Bead 100mHz
5561	4822 157 52392	27µH
5562	4822 526 10704	Bead 100mHz
5564	4822 526 10704	Bead 100mHz
5602	4822 157 11867	5.6µH 5%
5603	4822 157 11867	5.6µH 5%
5604	4822 157 11867	5.6µH 5%
5672	4822 157 71401	27µH
5678	4822 157 71401	27µH
5831	4822 157 11139	6.8µH 5%
5832	4822 157 11139	6.8µH 5%
5833	4822 157 11139	6.8µH 5%
5835	3198 018 31290	12µH 10%

6001	4822 130 34142	BZX79-B33
6002	4822 130 11397	BAS316
6004	4822 130 11525	1SS356
6101	4822 130 10837	UDZS8.2B
6103	4822 130 10837	UDZS8.2B
6104	4822 130 10837	UDZS8.2B
6105	4822 130 10837	UDZS8.2B
6106	4822 130 11416	PDZ6.8B
6171	4822 130 42488	BYD33D
6201	4822 130 11397	BAS316
6202	4822 130 11397	BAS316
6206	4822 130 11416	PDZ6.8B
6207	9322 179 26673	ZTE2
6331	4822 130 30842	BAV21
6333	4822 130 30842	BAV21
6335	4822 130 30842	BAV21
6360	4822 130 30621	1N4148
6361	4822 130 11397	BAS316
6362	4822 130 11397	BAS316
6364	4822 130 11397	BAS316
6365	4822 130 11397	BAS316
6400	4822 050 21002	1K 1% 0,6W
6401	4822 130 34383	BZX79-B47
6401	4822 130 30864	BZX79-B68
6445	4822 130 11551	UDZS10B
6447	4822 130 30621	1N4148
6448	4822 130 34167	BZX79-B6V2
6449	5322 130 34337	BAV99
6452	4822 130 11397	BAS316
6453	3198 020 55680	BZX384-C5V6
6460	9340 559 50112	BY228/24
6460	4822 130 80298	DG3-7005L
6461	4822 130 80572	RGP30J
6462	4822 130 34197	BZX79-B12
6463	9340 548 61115	PDZ12B
6465	4822 130 30842	BAV21
6466	4822 130 30842	BAV21
6468	4822 130 11397	BAS316
6469	4822 130 42606	BYD33J
6470	5322 130 34337	BAV99
6476	4822 130 34281	BZX79-B15
6481	4822 130 34173	BZX79-B5V6
6482	4822 130 30862	BZX79-B9V1
6483	4822 130 34142	BZX79-B33
6485	4822 130 42606	BYD33J
6486	9322 164 42682	EGP20DL-5100
6487	4822 130 42488	BYD33D

6488	9322 164 42682	EGP20DL-5100
6490	4822 130 42606	BYD33J
6500	9322 132 55667	Bridge coil GBU4JL-7002
6520	4822 130 42488	BYD33D
6522	4822 130 11152	UDZ18B
6523	4822 130 30621	1N4148
6524	4822 130 31083	BYW55
6525	4822 130 31083	BYW55
6526	9340 548 67115	PDZ22B
6540	4822 130 34167	BZX79-B6V2
6541	4822 130 11551	UDZS10B
6560	3139 120 52021	BYV29X-500
6561	4822 130 32715	SB340
6563	4822 130 11397	BAS316
6565	5322 130 34331	BAV70
6566	4822 130 30621	1N4148
6567	4822 130 11148	UDZ4.7B
6567	4822 130 10837	UDZS8.2B
6569	4822 130 11397	BAS316
6570	9322 163 91685	BZX384-C6V2
6570	4822 130 10837	UDZS8.2B
6580	4822 130 11397	BAS316
6582	9322 175 70667	STPS10L60D
6691	9322 050 99682	LTL-10224WHCR
6692	9322 127 54667	TSOP1836UH1
6801	9340 548 52115	PDZ5.1B
6805	4822 130 10838	UDZ3.3B
6806	4822 130 10837	UDZS8.2B
6808	9322 179 26673	ZTE2
6831	4822 130 30621	1N4148
6901	4822 051 20008	Jumper

7000	9352 628 51112	TDA8941P/N1
7001	4822 130 63732	MMUN2212
7101	5322 130 60159	BC846B
7131	5322 130 60159	BC846B
7200	9352 707 67557	TDA9565H/N1/5/0648
7200	9352 712 22557	TDA9565H/N1/5/0739
7201	5322 130 60159	BC846B
7204	4822 130 60373	BC856B
7206	5322 130 42755	BC847C
7209	5322 130 42718	BFS20
7210	5322 130 42718	BFS20
7330	9352 561 40112	TDA6108
7331	5322 130 60159	BC846B
7332	5322 130 60159	BC846B
7333	5322 130 60159	BC846B
7360	4822 130 40959	BC547B
7362	9322 166 55682	2SA1358
7363	4822 130 40959	BC547B
7365	9322 166 56682	2SC3421
7366	4822 130 41646	BF423
7367	4822 130 44568	BC557B
7400	9322 157 37687	STP3NC60FP
7441	4822 130 60373	BC856B
7443	4822 130 44568	BC557B
7444	4822 130 40959	BC547B
7450	3198 010 44010	PDTA114ET
7460	9340 550 92127	BU4508DX
7461	4822 130 40981	BC337-25
7462	9340 547 00215	PDTC143ZT
7463	4822 130 41246	BC327-25
7471	9352 701 64112	TDA8359J/N2
7480	4822 130 40823	BD139
7482	4822 130 40823	BD139
7515	9322 175 72667	TCET1104(G)
7520	9352 673 56112	TEA1507P/N1
7521	9322 160 63687	STP7NC80ZFP
7522	5322 130 60159	BC846B
7540	4822 130 40959	BC547B
7541	4822 130 11155	PDTC114ET
7542	4822 130 60373	BC856B
7560	4822 209 16978	LF33CV
7561	9340 547 00215	PDTC143ZT
7580	4822 130 60373	BC856B
7602	9322 147 25682	M24C16-WBN6
7606	9340 547 00215	PDTC143ZT
7801	5322 209 11102	HEF4052BT
7802	5322 209 14481	HEF4053BT
7803	5322 130 60159	BC846B
7803	4822 130 61129	BCV27
7804	5322 130 60159	BC846B
7804	4822 130 61129	BCV27
7805	5322 130 60159	BC846B
7806	5322 130 60159	BC846B
7807	5322 130 60159	BC846B
7831	9322 182 56682	MSP3411G-PO-B11
7831	9322 183 57682	MSP3415G-PO-B11
7834	5322 130 60159	BC846B
7835	5322 130 60159	BC846B
7901	9322 158 65667	AN7522N
7901	9322 166 29682	AN7580
7903	5322 130 60159	BC846B
9611	4822 157 52392	27µH

Side AV Panel [C + E1]

Various

0232	4822 267 31014	Headphone socket
0250	4822 265 11606	3p
0251	4822 267 10735	3p
0251	2422 025 15849	6p male
0253	2422 025 16382	3p male
0254	4822 267 10734	5p
0255	4822 267 10565	4p

2171	5322 122 32311	470pF 10% 100V
2172	5322 122 32311	470pF 10% 100V
2173	5322 122 32311	470pF 10% 100V
2174	5322 122 32311	470pF 10% 100V
2176	5322 122 32311	470pF 10% 100V
2177	4822 124 40248	10µF 20% 63V
2178	5322 122 32311	470pF 10% 100V
2179	4822 124 40248	10µF 20% 63V

3150	4822 116 83884	47kΩ 5% 0.5W
3151	4822 116 83868	150Ω 5% 0.5W
3152	4822 116 83884	47kΩ 5% 0.5W
3153	4822 116 83868	150Ω 5% 0.5W
3155	4822 116 52201	75Ω 5% 0.5W
3156	4822 116 52206	120Ω 5% 0.5W
3156	4822 116 83876	270Ω 5% 0.5W
3157	4822 116 52206	120Ω 5% 0.5W
3157	4822 116 83876	270Ω 5% 0.5W

6161	4822 130 34278	BZX79-B6V8

Front Interface [Q1]

Various

0157	3104 311 02471	Cable 5p 680m
0177	3104 311 03011	Cable 2p 340mm
0211	2422 025 16268	2p male
0212	2422 025 16268	2p male
0214	2422 025 06353	5p male
0231	2422 128 02972	Power switch

2691	4822 124 40248	10µF 20% 63V
2692	4822 126 13751	47nF 10% 63V
2693	4822 126 13751	47nF 10% 63V
2694	4822 126 13751	47nF 10% 63V
2695	4822 126 13751	47nF 10% 63V
2698	5322 121 42386	100nF 5% 63V

3500	4822 053 21335	3.3M Ω 5% 0.5W
3501	4822 053 21335	3.3M Ω 5% 0.5W
3691	4822 116 52219	330Ω 5% 0.5W
3693	4822 116 83872	220Ω 5% 0.5W

6691	9322 050 99682	LTL-10224WHCR
6692	9322 127 54667	TSOP1836UH1

Top control [T, T1]

Various

0158	3139 131 01771	Cable 3p 1000mm
0158	3139 131 01711	Cable 3p 1340mm
0215	4822 267 10748	3p
0215	2422 025 16601	3p male
1091	4822 276 13775	Switch
1092	4822 276 13775	Switch
1093	4822 276 13775	Switch
1094	4822 276 13775	Switch

3091	4822 051 20561	560Ω 5% 0.1W
3092	4822 051 20391	390Ω 5% 0.1W
3093	4822 051 20561	560Ω 5% 0.1W
3094	4822 051 20391	390Ω 5% 0.1W
3095	4822 051 20332	3.3kΩ 5% 0.1W
3096	4822 117 11139	1.5kΩ 1% 0.1W

6091	4822 130 11528	1PS76SB10
6091	4822 130 31983	BAT85