Colour television

Chassis

JL2.1E

AA

Service
Service
Service

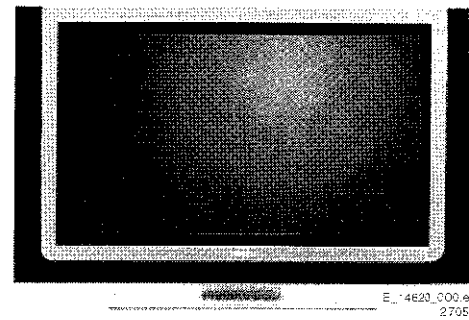

E_14620_000.eps
270504

ServiceManual

Contents

		Page
1.	Technical Specifications, Connections, and Chassis Overview	2
2.	Safety Instructions, Warnings, and Notes	6
3.	Directions for Use	8
4.	Mechanical Instructions	9
5.	Service Modes, Error Codes, and Fault Finding	16
6.	*Block Diagrams, Testpoint Overview, and Waveforms*	
	Wiring Diagram (32") LCD SHARP	35
	Wiring Diagram (37") LCD LPL	36
	Wiring Diagram (42") LCD LPL	37
	Block Diagram Supply + Standby (32")	38
	Block Diagram Supply + Standby (37")	39
	Block Diagram Supply + Standby (42")	40
	Block Diagram Video	41
	Block Diagram Audio	42
	Block Diagram Control + Clock Signals	43
	I2C overview	44
	Supply Lines Overview	45
7.	*Circuit Diagrams and PWB Layouts*	*Drawing PWB*
	LCD Supply (32"): Mains Filter + Standby	(A1) 46 48-51
	LCD Supply (32"): Supply	(A2) 46 48-51
	LCD Supply (37"): Mains Filter + Standby	(A1) 52 54-53
	LCD Supply (37"): Supply	(A2) 53 54-53
	LCD Supply (42" - v2): MF + Standby Part A	(A1)56 60-65
	LCD Supply (42" - v2): Supply Part A	(A2) 57 60-65
	LCD Supply (42" - v2): MF + Standby Part B	(A3)58 60-65
	LCD Supply (42" - v2): Supply Part B	(A4) 59 60-65
	LCD Supply (42" - v3): MF + Standby Part A	(A1)66 70-75
	LCD Supply (42" - v3): Supply Part A	(A2) 67 70-75
	LCD Supply (42" - v3): MF + Standby Part B	(A3)68 70-75
	LCD Supply (42" - v3): Supply Part B	(A4) 69 70-75
	Interface Panel DC / DC	(AB) 76 77
	Ambi Light Panel	(AL) 78 79

Contents

		Page
	SSB (v2)	(B) 80-127 132-141
	SSB: Signal Lines Overview (v2) Part 1	128
	SSB: Signal Lines Overview (v2) Part 2	129
	SSB (v3: delta w.r.t. v2)	(B) 142-163 168-177
	SSB: Signal Lines Overview (v3) Part 1	164
	SSB: Signal Lines Overview (v3) Part 2	165
	External I/O part 1	(BE1) 178 180
	External I/O part 2	(BE2) 179 180
	Side I/O Panel (v2)	(D) 181 182
	Side I/O Panel (v3)	(D) 183 184
	Control Board (Top Control)	(E) 185 186
	LED Panel	(J) 187 188
	Standby/Audio Panel: Connections	(SA1) 189 192-194
	Standby/Audio Panel: Standby	(SA2) 190 192-194
	Standby/Audio Panel: Audio	(SA3) 191 192-194
8.	Alignments	195
9.	Circuit Descriptions, Abbreviation List, and IC Data Sheets	200
	Abbreviation List	221
	IC Data Sheets	224
10.	Spare Parts List	237
11.	Revision List	254

©Copyright 2005 Philips Consumer Electronics B.V. Eindhoven, The Netherlands.
All rights reserved. No part of this publication may be reproduced, stored in a retrieval system or transmitted, in any form or by any means, electronic, mechanical, photocopying, or otherwise without the prior permission of Philips.

Published by EL 0569 TV Service | Printed in the Netherlands | Subject to modification | EN 3122 785 15710

PHILIPS

1. Technical Specifications, Connections, and Chassis Overview

Index of this chapter:

1.1 Technical Specifications
1.2 Connections
1.3 Chassis Overview

Notes:

- Figures can deviate due to the different set executions.
- Specifications are indicative (subject to change).

1.1 Technical Specifications

1.1.1 Vision

Display type	: LCD
Screen size	: 32" (82 cm), 16:9
	: 37" (94 cm), 16:9
	: 42" (107 cm), 16:9
Resolution (HxV pixels)	: 32": 1366(*3)x768
	: 37": 1920(*3)x1080
	: 42": 1920(*3)x1080
Dynamic contrast ratio	: 32": 6000:1
	: 37": 5000:1
	: 42": 4000:1
Light output (cd/m^2)	: 32", 37": 550
	: 42": 500
Typical LCD response time (ms)	: 32", 42": 8
	: 37": 6
Viewing angle (HxV degrees)	: 176
Tuning system	: PLL
Colour systems	: PAL B/G, D/K, I
	: SECAM B/G, D/K, L/L'
Supported computer formats (60 Hz)	: 640x480
	: 800x600
	: 1024x768
	: 1366x768
Supported video formats	: 640x480i - 1fH
	: 720x576i - 1fH
	: 640x480p - 2fH
	: 720x576p - 2fH
	: 1920x1080i - 2fH
	: 1280x720p - 3fH
AV (playback only)	: NTSC, PAL, SECAM
Tuner bands	: UHF, VHF, S, Hyper

1.1.2 Sound

Sound systems	: AV stereo,
	: 2CS B/G, D/K
	: NIC. B/G, D/K, I, L/L'
Maximum power (W_{RMS})	: 2 x 15 (int.)

1.1.3 Multimedia

Supported digital media	: Compact Flash I & II
	: Memory Stick
	: Microdrive
	: SD / mini SD Card
	: Multi Media Card
	: Smart Media Card
Supported file formats	: JPEG
	: MP3
	: Slideshow (.alb)
	: DivX 5 (only 42")
	: MPEG1, 2, 4(only 42")
	: XviD (only 42")
USB input	: USB2.0

1.1.4 Miscellaneous

Power supply:	
- Mains voltage (V_{AC})	: 220 - 240
- Mains frequency (Hz)	: 50 / 60
Ambient conditions:	
- Temperature range (°C)	: +5 to +40
- Maximum humidity	: 90% R.H.
Power consumption (values are indicative)	
- Normal operation (W)	: 32": 163
	: 37": 221
	: 42": 239
- Stand-by (W)	: < 2
Dimensions (WxHxD cm)	: 32": 1000x605x96
	: 37": 1130x680x96
	: 42": 1238x755x96
Weight (kg)	: 32": 20
	: 37": 27
	: 42": 35

1.2 Connections

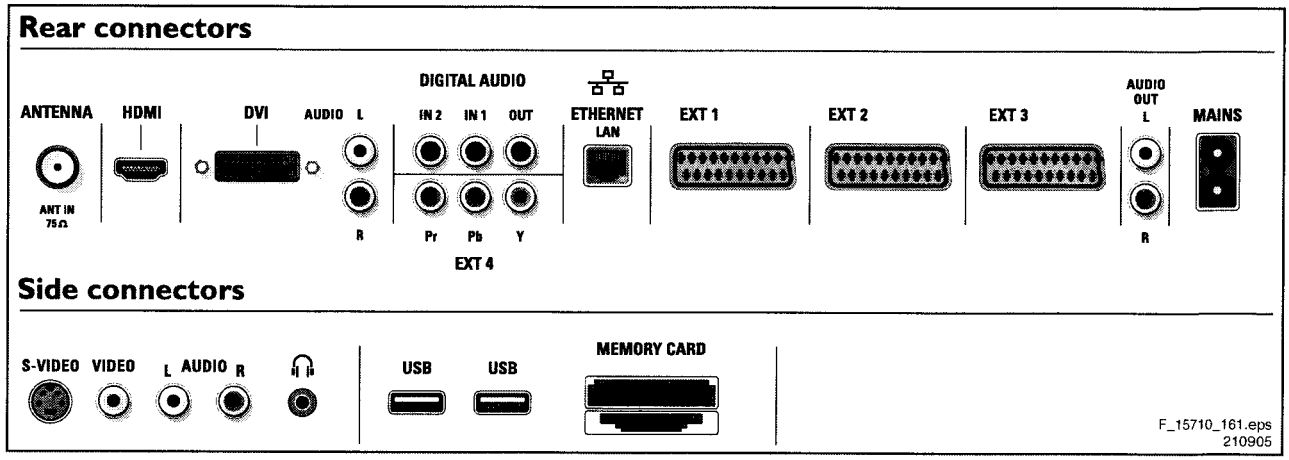

Figure 1-1 Connection overview

Note: The following connector colour abbreviations are used (acc. to DIN/IEC 757): Bk= Black, Bu= Blue, Gn= Green, Gy= Grey, Rd= Red, Wh= White, Ye= Yellow.

1.2.1 Side Connections

Headphone (Output)

Bk - Headphone	32 - 600 ohm / 10 mW	

Cinch: Video CVBS - In, Audio - In

Rd - Audio R	0.5 V_{RMS} / 10 kohm	
Wh - Audio L	0.5 V_{RMS} / 10 kohm	
Ye - Video CVBS	1 V_{PP} / 75 ohm	

SVHS (Hosiden): Video Y/C - In

1 - Ground Y	Gnd	
2 - Ground C	Gnd	
3 - Video Y	1 V_{PP} / 75 ohm	
4 - Video C	0.3 V_{PP}P / 75 ohm	

1.2.2 Rear Connections

Aerial - In

- IEC-type	Coax, 75 ohm	

HDMI 1 & 2: Digital Video, Digital Audio - In

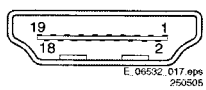

Figure 1-2 HDMI (type A) connector

1	- D2+	Data channel	
2	- Shield	Gnd	
3	- D2-	Data channel	
4	- D1+	Data channel	
5	- Shield	Gnd	
6	- D1-	Data channel	
7	- D0+	Data channel	
8	- Shield	Gnd	
9	- D0-	Data channel	
10	- CLK+	Data channel	
11	- Shield	Gnd	
12	- CLK-	Data channel	
13	- n.c.		
14	- n.c.		
15	- DDC_SCL	DDC clock	
16	- DDC_SDA	DDC data	
17	- Ground	Gnd	
18	- +5V		
19	- HPD	Hot Plug Detect	
20	- Ground	Gnd	

DVI-I: Digital/Analogue Video - In

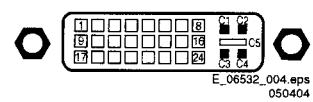

Figure 1-3 DVI-I connector

1	- D2-		
2	- D2+		
3	- Shield	Gnd	
4	- D4-		
5	- D4+		
6	- DDC_SCL	DDC clock	
7	- DDC_SDA	DDC data	
8	- V-sync	0 - 5 V	
9	- D1-		
10	- D1+		
11	- Shield	Gnd	
12	- D3-		
13	- D3+		
14	- +5V		
15	- Ground	Gnd	
16	- HPD	Hot Plug Detect	
17	- D0-		
18	- D0+		
19	- Shield	Gnd	
20	- D5-		
21	- D5+		
22	- Shield	Gnd	
23	- CLK+		
24	- CLK-		
C1	- Video Red	0.7 V_{PP} / 75 ohm	
C2	- Video Green	0.7 V_{PP} / 75 ohm	
C3	- Video Blue	0.7 V_{PP} / 75 ohm	
C4	- H-sync	0 - 5 V	
C5	- Ground	Gnd	

Cinch: DVI Audio - In

Rd - Audio - R	0.5 V_{RMS} / 10 kohm	
Wh - Audio - L	0.5 V_{RMS} / 10 kohm	

Digital Audio: S/PDIF - In/Out

Bk - Coaxial	0.2 - 0.6V_{PP} / 75 ohm	

Bk - Coaxial	0.2 - 0.6V_{PP} / 75 ohm	
Bk - Coaxial	0.4 - 0.6V_{PP} / 75 ohm	

EXT4 Cinch: Video YPbPr - In

Gn - Video Y	1 V_{PP} / 75 ohm	
Bu - Video Pb	0.7 V_{PP} / 75 ohm	
Rd - Video Pr	0.7 V_{PP} / 75 ohm	

RJ45: Ethernet (if present)

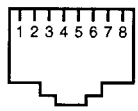

E_06532_025.eps
210905

Figure 1-4 Ethernet connector

1	- TD+	Transmit signal	
2	- TD-	Transmit signal	
3	- RD+	Receive signal	
4	- n.c.		
5	- n.c.		
6	- RD-	Receive signal	
7	- n.c.		
8	- n.c.		

EXT1: Video RGB - In, CVBS - In/Out, Audio - In/Out

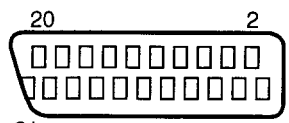

E_06532_001.eps
050404

Figure 1-5 SCART connector

1	- Audio R	0.5 V_{RMS} / 1 kohm	
2	- Audio R	0.5 V_{RMS} / 10 kohm	
3	- Audio L	0.5 V_{RMS} / 1 kohm	
4	- Ground Audio	Gnd	
5	- Ground Blue	Gnd	
6	- Audio L	0.5 V_{RMS} / 10 kohm	
7	- Video Blue	0.7 V_{PP} / 75 ohm	
8	- Function Select	0 - 2 V: INT	
		4.5 - 7 V: EXT 16:9	
		9.5 - 12 V: EXT 4:3	
9	- Ground Green	Gnd	
10	- Easylink P50	0 - 5 V / 4.7 kohm	
11	- Video Green	0.7 V_{PP} / 75 ohm	
12	- n.c.		
13	- Ground Red	Gnd	
14	- Ground P50	Gnd	
15	- Video Red	0.7 V_{PP} / 75 ohm	
16	- Status/FBL	0 - 0.4 V: INT	
		1 - 3 V: EXT / 75 ohm	
17	- Ground Video	Gnd	
18	- Ground FBL	Gnd	
19	- Video CVBS	1 V_{PP} / 75 ohm	
20	- Video CVBS	1 V_{PP} / 75 ohm	
21	- Shield	Gnd	

Service Connector (UART)

1	- UART_TX	Transmit	
2	- Ground	Gnd	
3	- UART_RX	Receive	

EXT2: Video RGB/YC - In, CVBS - In/Out, Audio - In/Out

1	- Audio R	0.5 V_{RMS} / 1 kohm	
2	- Audio R	0.5 V_{RMS} / 10 kohm	
3	- Audio L	0.5 V_{RMS} / 1 kohm	
4	- Ground Audio	Gnd	
5	- Ground Blue	Gnd	
6	- Audio L	0.5 V_{RMS} / 10 kohm	
7	- Video Blue/C-out	0.7 V_{PP} / 75 ohm	
8	- Function Select	0 - 2 V: INT	
		4.5 - 7 V: EXT 16:9	
		9.5 - 12 V: EXT 4:3	
9	- Ground Green	Gnd	
10	- Easylink P50	0 - 5 V / 4.7 kohm	
11	- Video Green/Y	0.7 V_{PP} / 75 ohm	
12	- n.c.		
13	- Ground Red	Gnd	
14	- Ground P50	Gnd	
15	- Video Red/C	0.7 V_{PP} / 75 ohm	
16	- Status/FBL	0 - 0.4 V: INT	
		1 - 3 V: EXT / 75 ohm	
17	- Ground Video	Gnd	
18	- Ground FBL	Gnd	
19	- Video CVBS	1 V_{PP} / 75 ohm	
20	- Video CVBS/Y	1 V_{PP} / 75 ohm	
21	- Shield	Gnd	

EXT3: Video CVBS - In/Out, Audio - In

1	- n.c.		
2	- Audio R	0.5 V_{RMS} / 10 kohm	
3	- n.c.		
4	- Ground Audio	Gnd	
5	- Ground Blue	Gnd	
6	- Audio L	0.5 V_{RMS} / 10 kohm	
7	- n.c.		
8	- Function Select	0 - 2 V: INT	
		4.5 - 7 V: EXT 16:9	
		9.5 - 12 V: EXT 4:3	
9	- Ground Green	Gnd	
10	- n.c.		
11	- n.c.		
12	- n.c.		
13	- Ground Red	Gnd	
14	- Ground Data	Gnd	
15	- n.c.		
16	- n.c.		
17	- Ground Video	Gnd	
18	- Ground FBL	Gnd	
19	- Video CVBS	1 V_{PP} / 75 ohm	
20	- Video CVBS	1 V_{PP} / 75 ohm	
21	- Shield	Gnd	

Cinch: Audio - Out

Rd - Audio - R	0.5 V_{RMS} / 10 kohm	
Wh - Audio - L	0.5 V_{RMS} / 10 kohm	

1.3 Chassis Overview

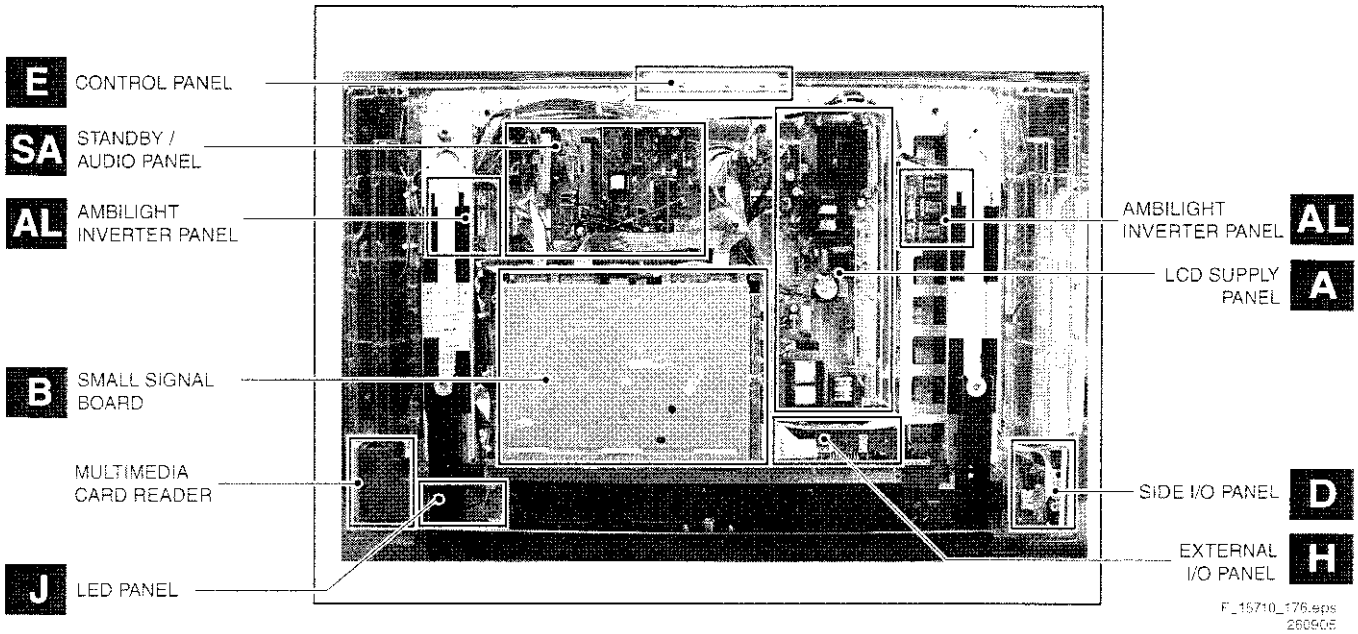

Figure 1-6 PWB locations (32" model)

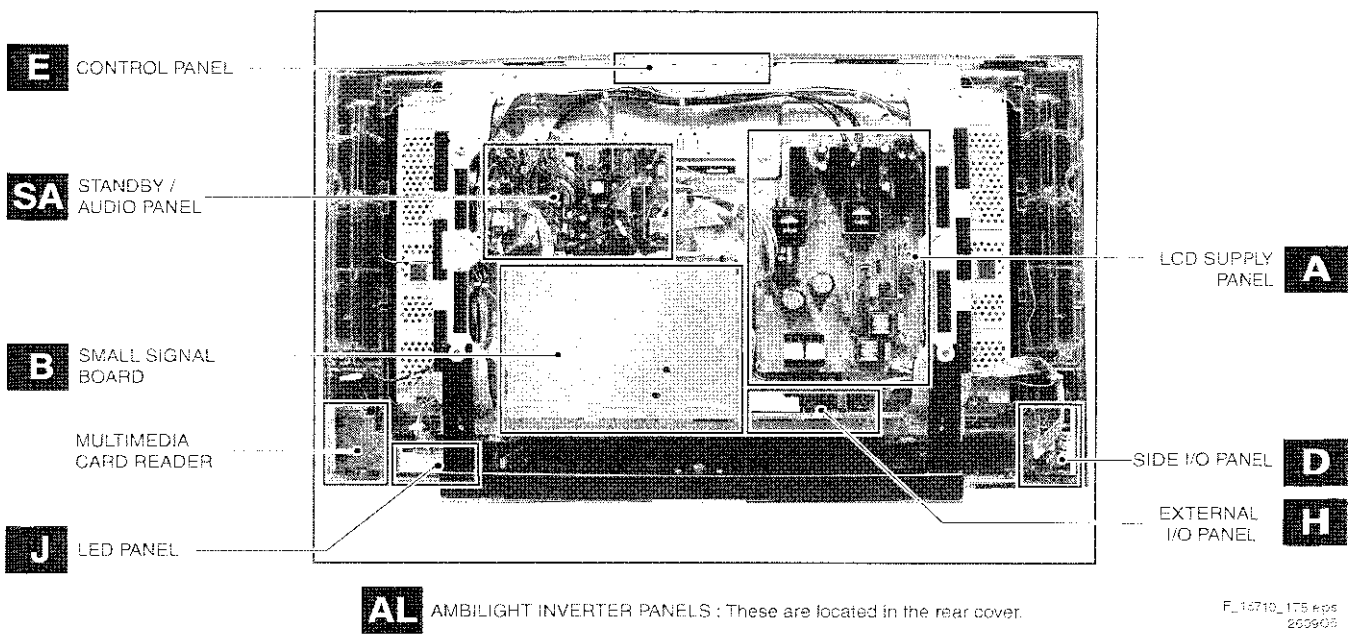

Figure 1-7 PWB locations (37" and 42" models)

2. Safety Instructions, Warnings, and Notes

Index of this chapter:

2.1 Safety Instructions
2.2 Warnings
2.3 Notes

2.1 Safety Instructions

Safety regulations require the following **during** a repair:

- Connect the set to the Mains (AC Power) via an isolation transformer (> 800 VA).
- Replace safety components, indicated by the symbol ⚠, only by components identical to the original ones. Any other component substitution (other than original type) may increase risk of fire or electrical shock hazard.

Safety regulations require that **after** a repair, the set must be returned in its original condition. Pay in particular attention to the following points:

- Route the wire trees correctly and fix them with the mounted cable clamps.
- Check the insulation of the Mains (AC Power) lead for external damage.
- Check the strain relief of the Mains (AC Power) cord for proper function.
- Check the electrical DC resistance between the Mains (AC Power) plug and the secondary side (only for sets that have a Mains (AC Power) isolated power supply):
  1. Unplug the Mains (AC Power) cord and connect a wire between the two pins of the Mains (AC Power) plug.
  2. Set the Mains (AC Power) switch to the "on" position (keep the Mains (AC Power) cord unplugged!).
  3. Measure the resistance value between the pins of the Mains (AC Power) plug and the metal shielding of the tuner or the aerial connection on the set. The reading should be between 4.5 Mohm and 12 Mohm.
  4. Switch "off" the set, and remove the wire between the two pins of the Mains (AC Power) plug.
- Check the cabinet for defects, to prevent touching of any inner parts by the customer.

2.2 Warnings

- All ICs and many other semiconductors are susceptible to electrostatic discharges (ESD ⚠). Careless handling during repair can reduce life drastically. Make sure that, during repair, you are connected with the same potential as the mass of the set by a wristband with resistance. Keep components and tools also at this same potential. Available ESD protection equipment:
  - Complete kit ESD3 (small tablemat, wristband, connection box, extension cable and earth cable) 4822 310 10671.
  - Wristband tester 4822 344 13999.
- Be careful during measurements in the high voltage section.
- Never replace modules or other components while the unit is switched "on".
- When you align the set, use plastic rather than metal tools. This will prevent any short circuits and the danger of a circuit becoming unstable.

2.3 Notes

2.3.1 General

- Measure the voltages and waveforms with regard to the chassis (= tuner) ground (⏚), or hot ground (⏚), depending on the tested area of circuitry. The voltages and waveforms shown in the diagrams are indicative. Measure them in the Service Default Mode (see chapter 5) with a colour bar signal and stereo sound (L: 3 kHz, R: 1 kHz unless stated otherwise) and picture carrier at 475.25 MHz for PAL, or 61.25 MHz for NTSC (channel 3).
- Where necessary, measure the waveforms and voltages with (⊓) and without (⊼) aerial signal. Measure the voltages in the power supply section both in normal operation (⏻) and in stand-by (⏻). These values are indicated by means of the appropriate symbols.
- The semiconductors indicated in the circuit diagram and in the parts lists, are interchangeable per position with the semiconductors in the unit, irrespective of the type indication on these semiconductors.
- Manufactured under license from Dolby Laboratories. "Dolby", "Pro Logic" and the "double-D symbol", are trademarks of Dolby Laboratories.

2.3.2 Schematic Notes

- All resistor values are in ohms, and the value multiplier is often used to indicate the decimal point location (e.g. 2K2 indicates 2.2 kohm).
- Resistor values with no multiplier may be indicated with either an "E" or an "R" (e.g. 220E or 220R indicates 220 ohm).
- All capacitor values are given in micro-farads ($\mu = x10^{-6}$), nano-farads ($n = x10^{-9}$), or pico-farads ($p = x10^{-12}$).
- Capacitor values may also use the value multiplier as the decimal point indication (e.g. 2p2 indicates 2.2 pF).
- An "asterisk" (*) indicates component usage varies. Refer to the diversity tables for the correct values.
- The correct component values are listed in the Spare Parts List. Therefore, always check this list when there is any doubt.

2.3.3 Rework on BGA (Ball Grid Array) ICs

General

Although (LF)BGA assembly yields are very high, there may still be a requirement for component rework. By rework, we mean the process of removing the component from the PWB and replacing it with a new component. If an (LF)BGA is removed from a PWB, the solder balls of the component are deformed drastically so the removed (LF)BGA has to be discarded.

Device Removal

As is the case with any component that, is being removed, it is essential when removing an (LF)BGA, that the board, tracks, solder lands, or surrounding components are not damaged. To remove an (LF)BGA, the board must be uniformly heated to a temperature close to the reflow soldering temperature. A uniform temperature reduces the risk of warping the PWB. To do this, we recommend that the board is heated until it is certain that all the joints are molten. Then carefully pull the component off the board with a vacuum nozzle. For the appropriate temperature profiles, see the IC data sheet.

Area Preparation

When the component has been removed, the vacant IC area must be cleaned before replacing the (LF)BGA.
Removing an IC often leaves varying amounts of solder on the mounting lands. This excessive solder can be removed with either a solder sucker or solder wick. The remaining flux can be removed with a brush and cleaning agent.
After the board is properly cleaned and inspected, apply flux on the solder lands and on the connection balls of the (LF)BGA.
Note: Do not apply solder paste, as this has been shown to result in problems during re-soldering.

Device Replacement
The last step in the repair process is to solder the new component on the board. Ideally, the (LF)BGA should be aligned under a microscope or magnifying glass. If this is not possible, try to align the (LF)BGA with any board markers. So as not to damage neighbouring components, it may be necessary to reduce some temperatures and times.

More Information
For more information on how to handle BGA devices, visit this URL: *www.atyourservice.ce.philips.com* (needs subscription, not available for all regions). After login, select "Magazine", then go to "Workshop Information". Here you will find Information on how to deal with BGA-ICs.

2.3.4 Lead-free Solder

Philips CE is producing lead-free sets (PBF) from 1.1.2005 onwards.

Identification: The bottom line of a type plate gives a 14-digit serial number. Digits 5 and 6 refer to the production year, digits 7 and 8 refer to production week (in example below it is 1991 week 18).

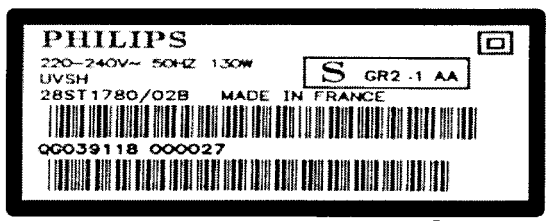

Figure 2-1 Serial number example

Regardless of the special lead-free logo (which is not always indicated), one must treat all sets from this date onwards according to the rules as described below.

Figure 2-2 Lead-free logo

Due to lead-free technology some rules have to be respected by the workshop during a repair:
- Use only lead-free soldering tin Philips SAC305 with order code 0622 149 00106. If lead-free solder paste is required, please contact the manufacturer of your soldering equipment. In general, use of solder paste within workshops should be avoided because paste is not easy to store and to handle.
- Use only adequate solder tools applicable for lead-free soldering tin. The solder tool must be able:
  - To reach a solder-tip temperature of at least 400°C.
  - To stabilise the adjusted temperature at the solder-tip.
  - To exchange solder-tips for different applications.
- Adjust your solder tool so that a temperature of around 360°C - 380°C is reached and stabilised at the solder joint. Heating time of the solder-joint should not exceed ~ 4 sec. Avoid temperatures above 400°C, otherwise wear-out of tips will increase drastically and flux-fluid will be destroyed. To avoid wear-out of tips, switch "off" unused equipment or reduce heat.
- Mix of lead-free soldering tin/parts with leaded soldering tin/parts is possible but PHILIPS recommends strongly **to avoid** mixed regimes. If this cannot be avoided, carefully clear the solder-joint from old tin and re-solder with new tin.
- Use only original spare-parts listed in the Service-Manuals. Not listed standard material (commodities) has to be purchased at external companies.
- Special information for lead-free BGA ICs: these ICs will be delivered in so-called "dry-packaging" to protect the IC against moisture. This packaging may only be opened shortly before it is used (soldered). Otherwise the body of the IC gets "wet" inside and during the heating time the structure of the IC will be destroyed due to high (steam-) pressure inside the body. If the packaging was opened before usage, the IC has to be heated up for some hours (around 90°C) for drying (think of ESD-protection!).
  Do not re-use BGAs at all!
- For sets produced before 1.1.2005, containing leaded soldering tin and components, all needed spare parts will be available till the end of the service period. For the repair of such sets nothing changes.

In case of doubt whether the board is lead-free or not (or with mixed technologies), you can use the following method:
- Always use the highest temperature to solder, when using SAC305 (see also instructions below).
- De-solder thoroughly (clean solder joints to avoid the mixing of two alloys).

Caution: For BGA-ICs, you **must** use the correct temperature profile, which is coupled to the 12NC. For an overview of these profiles, visit the website *www.atyourservice.ce.philips.com* (needs subscription, but is not available for all regions).
You will find this and more technical information within the "Magazine", chapter "Workshop information".
For additional questions please contact your local repair help desk.

2.3.5 Practical Service Precautions

- **It makes sense to avoid exposure to electrical shock.** While some sources are expected to have a possible dangerous impact, others of quite high potential are of limited current and are sometimes held in less regard.
- **Always respect voltages.** While some may not be dangerous in themselves, they can cause unexpected reactions that are best avoided. Before reaching into a powered TV set, it is best to test the high voltage insulation. It is easy to do, and is a good service precaution.

3. Directions for Use

You can download this information from the following websites:
http://www.philips.com/support
http://www.p4c.philips.com

Notes:
- As the software upgrade is a new feature, it is explained below.
- Figures can deviate due to the different set executions.

Annex 1 - Philips TV software upgrade with portable memory

Introduction

Philips offers software upgrade capability for your TV using portable memory.
After you have completed a software upgrade, your TV will typically perform better.
What improvements are made depends on the upgrade software you are using as well as the software your TV contained before the upgrade.
You can execute the software upgrade procedure yourself.
Be aware that the content of this document is addressing technical or software skilled users.

Preparing a portable memory for software upgrade

For the procedure you will require:
- A personal computer with web browsing capability.
- An archive utility that supports the ZIP-format (e.g. WinZip for Windows or StuffIt for Mac OS.
- A preferably empty USB memory stick or memory card (if available).
  Supported memory cards (if available): CompactFlash Card Type I & II, IBM Microdrive, Memory Stick, SecureDigital Card / Mini SD Card, SmartMedia Card, MultiMedia Card.
  Note: Only FAT/DOS-formatted portable memory is supported.

New software can be obtained from your dealer or can be downloaded from the www.philips.com/support website:

1. Go to **www.philips.com/support** using the web browser on your PC.
2. Follow the procedure to find the information and the software related to your TV.
3. Select the latest software upgrade file and download it to your PC.
4. Decompress the ZIP-file and copy the file "autorun.upg" to the root directory of the USB portable memory.
   Note: Only use software upgrades that can be found on the www.philips.com/support web site.

Verifying the version of the TV software

Before starting the software upgrade procedure, it is advised to check what the current TV software is.

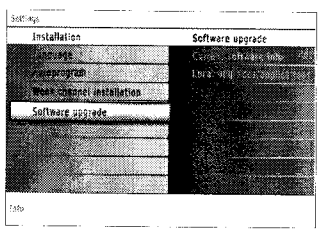

1. Select **Software Upgrade** in the Installation menu.
2. Press the cursor right.
   The Software Upgrade menu moves to the left panel.
3. Select **Current Software Info** to observe the version and the description of the current software.

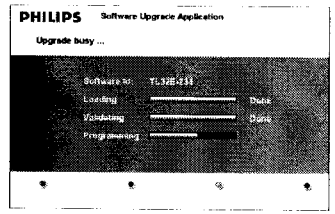

Automatic software upgrade procedure

1. Power off your TV and remove all memory devices.
2. Insert the USB portable memory that contains the downloaded software upgrade.
3. Switch on your TV with the power switch ⏻ at the right side of the TV.
4. At startup the TV will scan the USB portable memory until it finds the update content. The TV will automatically go to the upgrade mode. After a few seconds it will display the status of the upgrade procedure.

   Warning
   - *You are not allowed to remove the USB portable memory during the software upgrade procedure!*
   - *In case of a power drop during the upgrade procedure, don't remove the USB portable memory from the TV. The TV will continue the upgrade as soon as the power comes back.*
   - *If you try to upgrade to a software version lower than the current version, a confirmation will be asked. Downgrading to older software should only be done in case of real necessity.*
   - *If an error occurs during the upgrade you should retry the procedure or contact your dealer.*
5. When the software upgrade was successful, remove the USB portable memory and restart your TV with the power switch ⏻ at the right side of the TV.
   Your TV will start up with the new software.
   Note: Once the upgrade is finished use your PC to remove the TV software from your USB portable memory.

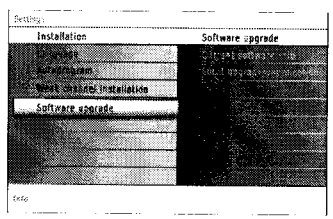

Manual software upgrade procedure

For a manual software upgrade copy the "autorun.upg" file in a directory called "Upgrades" located in the root of the USB portable memory.

1. Insert the portable memory that contains the downloaded software upgrade.
2. Select **Software Upgrade** in the Installation menu. Go to **Local upgrades/applications**.
   The TV will list all compatible images available on the USB portable memory and display the data for each selected upgrade image.
3. Select the correct upgrade image and press the red color button to start the upgrade.
   Your TV will restart and will automatically go to the upgrade mode. After a few seconds it will display the status of the upgrade procedure.
   Warning
   If you try to upgrade to a software version equal or lower than the current version, a confirmation will be asked. Downgrading to older software should only be done in case of real necessity.
4. When the software upgrade was successful, remove the USB portable memory and restart your TV with the power switch ⏻ at the right side of the TV.
   Your TV will start up with the new software.

4. Mechanical Instructions

Index of this chapter:

4.1 Cable Dressing
4.2 Service Position
4.3 Assy/PWB (Dis)Assembly
4.4 Display Disassembly
4.5 Set Re-assembly

Notes:

- Figures below can deviate slightly from the actual situation, due to the different model executions.
- Follow the disassemble instructions in described order.
- For "simple" actions, the descriptions will be only textual, where the more complicated ones will be clarified with figures.

4.1 Cable Dressing

4.1.1 Chassis

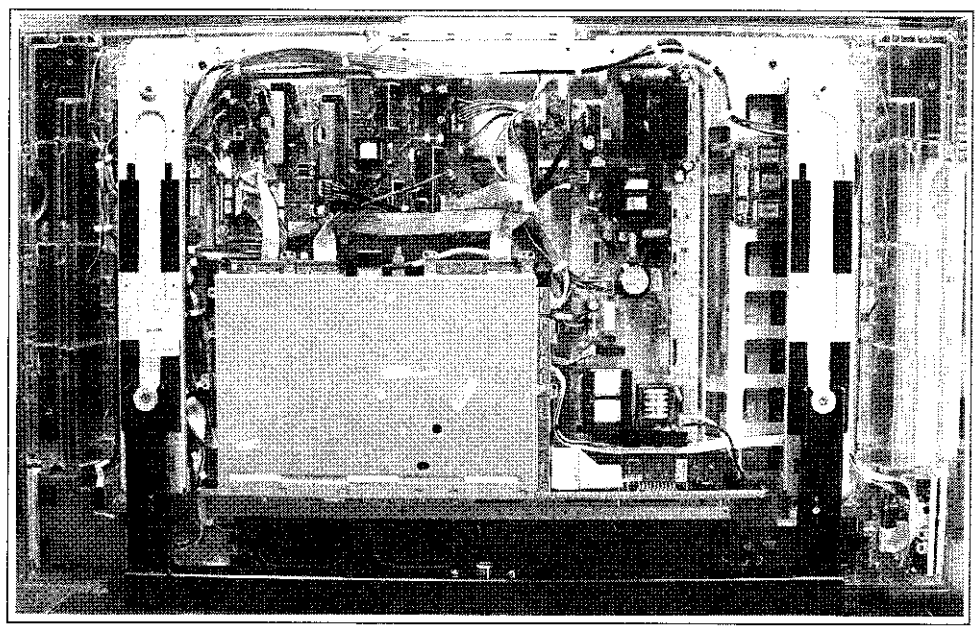

Figure 4-1 Chassis cable dressing (32" model)

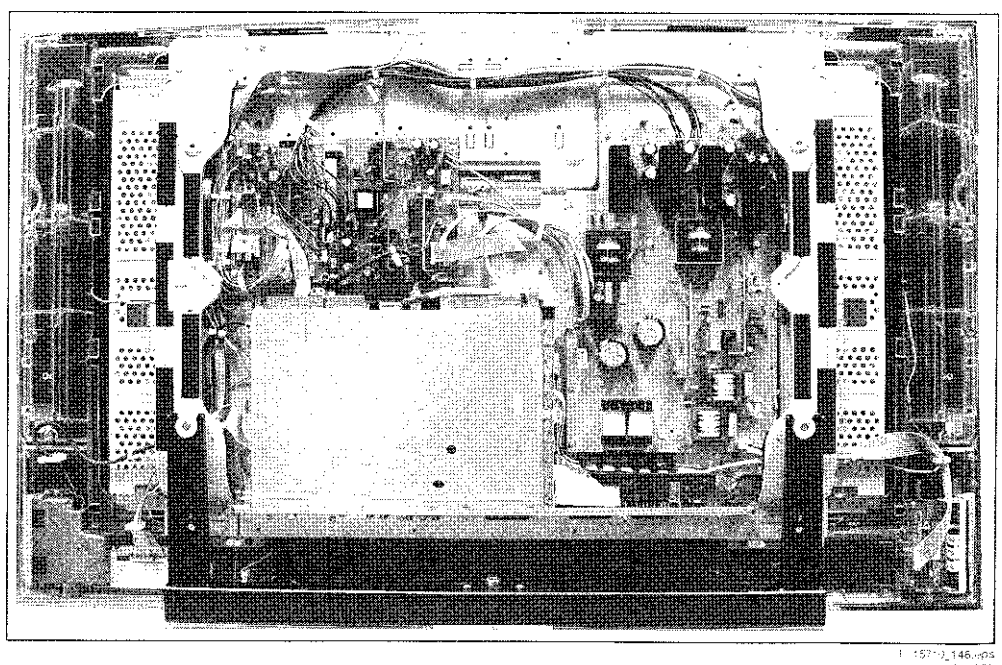

Figure 4-2 Chassis cable dressing (37" and 42" models)

4.2 Service Position

For easy servicing of this set, there are a few possibilities created:

- The buffers from the packaging.
- Foam bars (created for Service).
- Aluminium service stands (created for Service).

4.2.1 Foam Bars

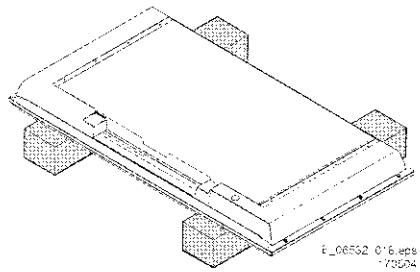

Figure 4-3 Foam bars

The foam bars (order code 3122 785 90580 for two pieces) can be used for all types and sizes of Flat TVs. By laying the TV face down on the (ESD protective) foam bars, a stable situation is created to perform measurements and alignments.
By placing a mirror under the TV, you can monitor the screen.

4.2.2 Aluminium Stands

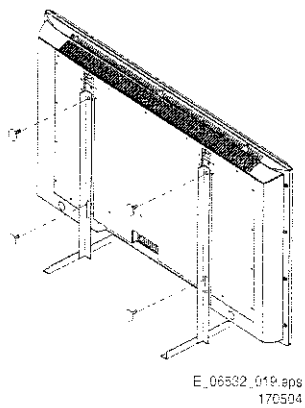

Figure 4-4 Aluminium stands (Mk1)

The new (Mk2) aluminium stands (order code 3122 785 90690) can also be used to do measurements, alignments, and duration tests. The stands can be (dis)mounted quick and easy by means of sliding them in/out the "mushrooms".
Important: For (older) FTV sets without these "mushrooms", it is obligatory to use the provided screws, otherwise it is possible to damage the monitor inside!.

4.3 Assy/PWB (Dis)Assembly

4.3.1 Metal Back Plate

Caution: Disconnect the mains power cord before you remove the metal back plate.

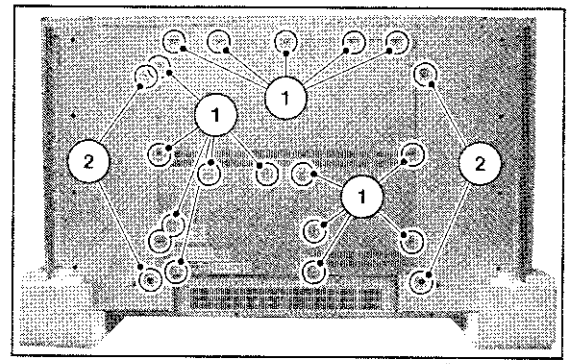

Figure 4-5 Metal back plate

1. Place the TV set upside down on a table top, using the foam bars (see part "Foam Bars").
   Caution: do **not** put pressure on the LCD display, but let the monitor lean on the speakers or the Front cover.
2. Remove all T10 parker screws (1) from the top, left, and right side of the metal back plate.
3. Remove all T10 tapping screws (2) from the centre and bottom side of the metal back plate.
4. Lift the plate from the set. (it hinges at the bottom side).

4.3.2 Rear Cover

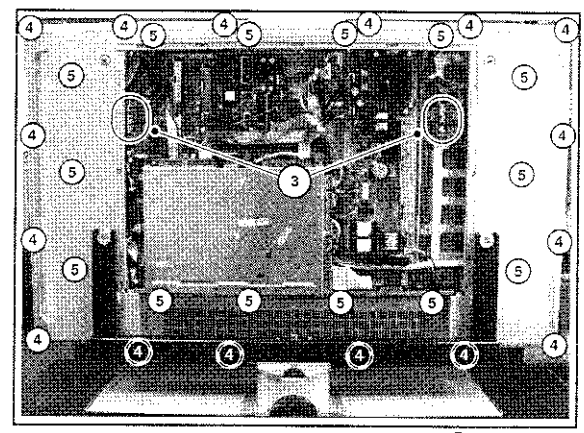

Figure 4-6 Rear cover (32" model)

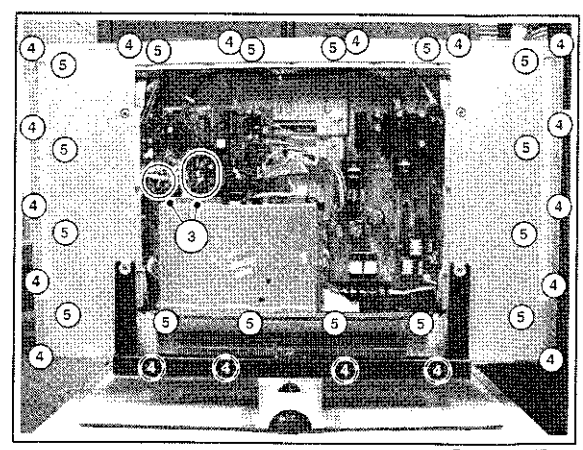

Figure 4-7 Rear cover (37" and 42" models)

1. Disconnect all connectors (3) from the Ambient Light inverter panels.
2. Remove all screws (4) around the edges of the rear cover.
3. Remove all screws (5) from the rear cover.
4. Lift the rear cover from the set. Make sure that wires and flat foils are not damaged during the removal.

4.3.3 NXT Speakers

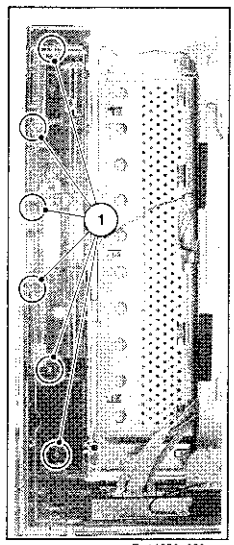

Figure 4-8 Speaker mounting screws at the rear side

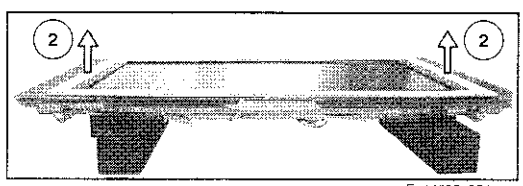

Figure 4-9 Front cover removal

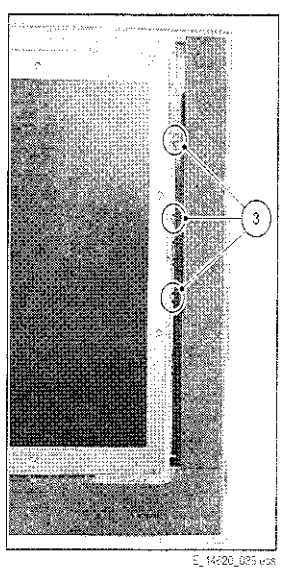

Figure 4-10 Speaker mounting screws at the front side

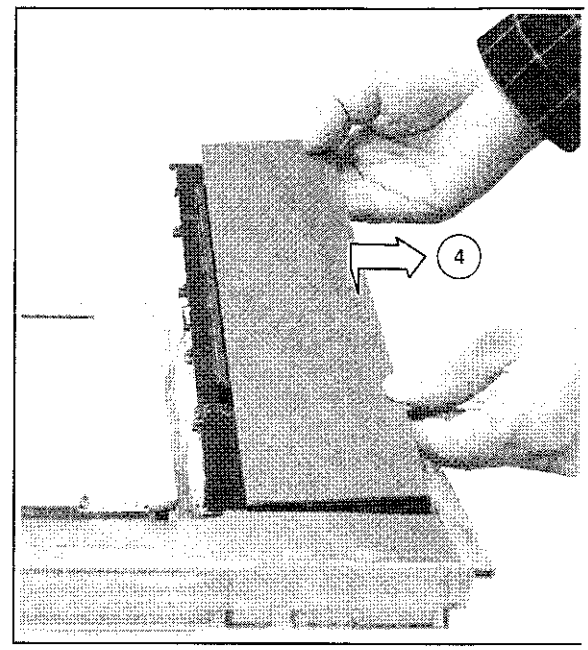

Figure 4-11 Speaker removal

1. Remove all speakers mounting screws [1] at the rear side of the set (one screw is located under the Card reader / Side I/O).
2. Flip the set over (**be aware that the front cover is loose now**), and remover the front cover [2].
3. Remove all speakers mounting screws [3] at the LCD side.
4. Release the speaker cable from its fixations
5. Take out the speaker unit [4].

4.3.4 Ambient Light Inverter Panel(s)

These models are equipped with **two** AmbiLight Inverters.

1. Disconnect all cables at the Inverter panels.
2. Remove all mounting screws from the panels.
   - For the 32" model, the panels are mounted on the metal frame. It might be necessary to remove the mounting bars first as they cover these screws partly
   - For the 37" and 42" models, the panels are mounted inside the rear cover.
3. Take out the panel.

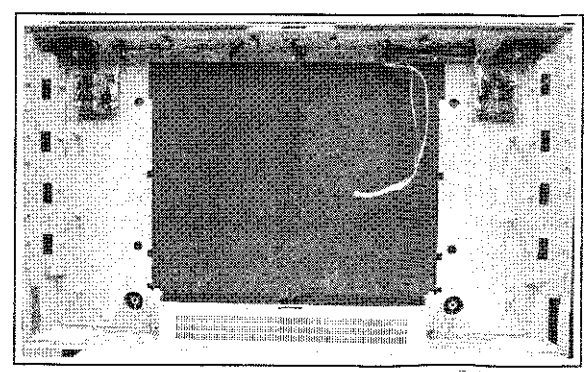

Figure 4-12 Ambilight inverter panels (37" and 42")

4.3.5 Top Control

1. Disconnect all cables from the panel.
2. Remove all mounting screws from the panel.
3. Release the clamps and take out the panel.

4.3.6 Stand-by Supply / Audio Amplifier Panel

1. Disconnect all cables from the panel.
2. Remove all mounting screws from the panel.
3. Take out the panel (it hinges at the bottom side).

4.3.7 DC/DC Interface Panel (only for 32" model)

1. Disconnect all cables from the panel.
2. Release the clamps and take out the panel.

4.3.8 Main Supply Panel

1. Disconnect all cables from the panel.
2. Remove all mounting screws from the panel.
3. Take out the panel (it hinges at the right side).

4.3.9 SSB

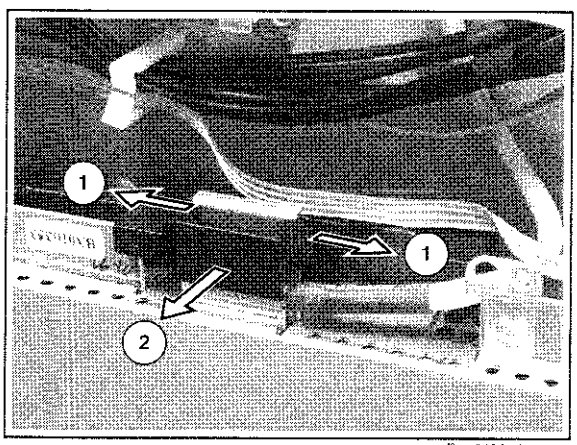

F_15490_017.eps
240605

Figure 4-13 LVDS connector locking bracket

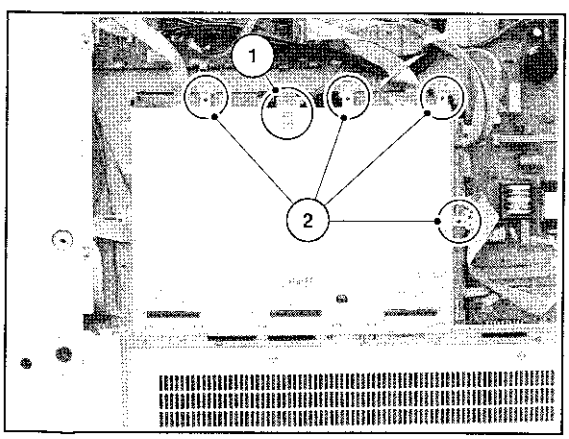

E_14620_030.eps
130504

Figure 4-14 SSB top shielding screws

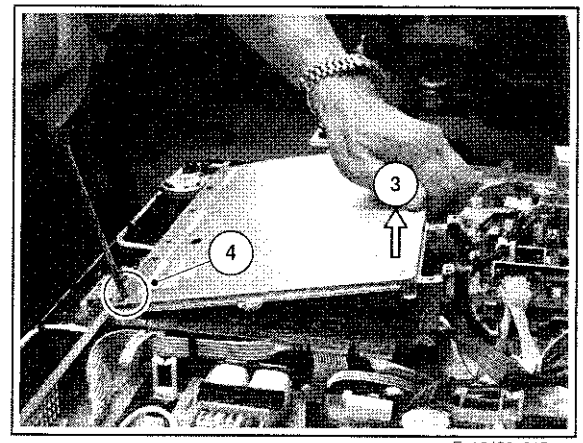

F_15490_015.eps
230605

Figure 4-15 SSB top shielding

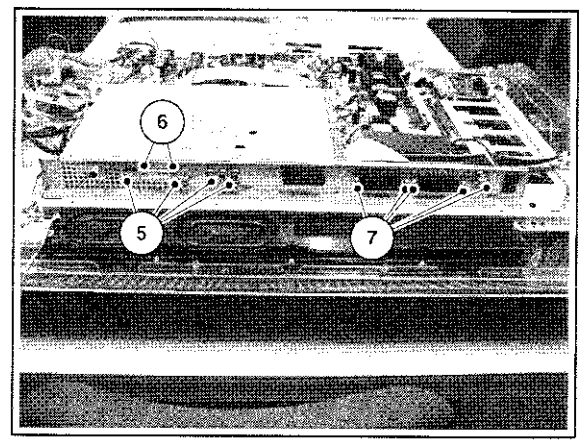

F_15710_144.eps
200905

Figure 4-16 Connector plate

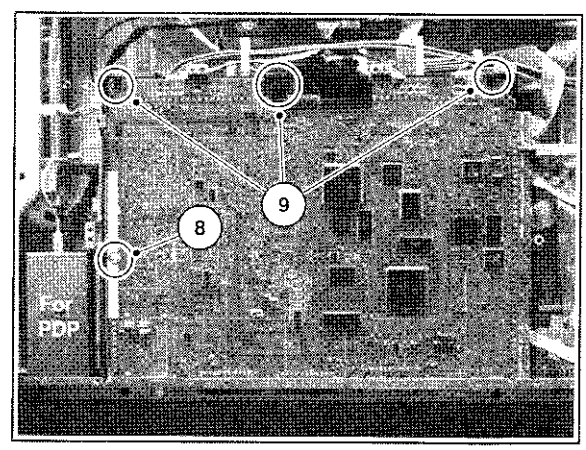

F_15490_027.eps
240605

Figure 4-17 SSB brackets

1. 1st Figure: Remove the LVDS connector locking bracket [1], [2].
2. 2nd Figure: Remove all shielding fixing screws [2].
3. 3rd Figure: Slide, and lift the shielding at the top [3] (**Note:** in some cases a piece of tape is used at the left underside of the SSB. This tape must be cut or removed before you can lift the shielding). The panel hinges at the SCART side.

At the same time, use a screwdriver to carefully prize the shielding at the bottom side [4], and remove the shielding. The SSB is now accessible.

4. To remove the whole SSB, unscrew all connector fixing screws from the connector plate [5] + [6] + [7]. Use a 5 mm socket screwdriver to remove both DVI connector distance bolts [6].
5. Disconnect the LVDS cable, and all other cables.
6. Remove the mounting screw [8] from the SSB.
7. Bend the brackets [9] away (may require some force), lift the SSB, and take it out.

4.3.10 SCART Panel

1. Disconnect all cables from the panel.
2. Remove the mounting screws [7] beside the SCART connectors at the connector plate (see figure" Connector plate").
3. Take out the SCART panel.

4.3.11 Digital Media Reader

1. Disconnect the USB cable at the SSB and the power line at the Stand-by/Audio panel.
2. Remove all mounting screws from the module.
3. Take out the module (replace complete module if defect).

4.3.12 LED Panel

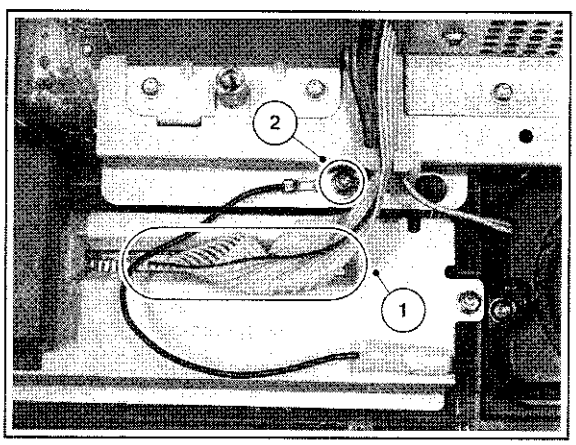

F_15710_141.eps
190905

Figure 4-18 LED panel (part 1)

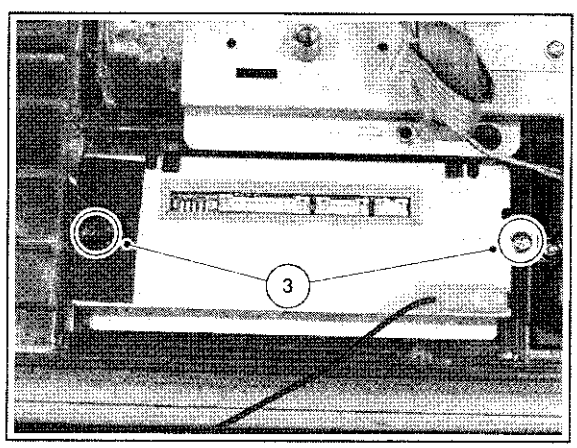

F_15710_142.eps
190905

Figure 4-19 LED panel (part 2)

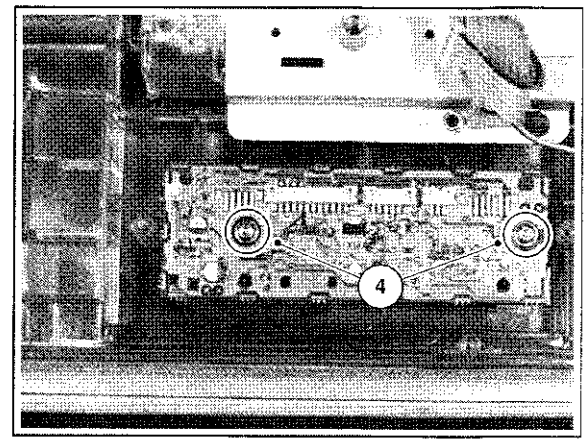

F_15710_143.eps
190905

Figure 4-20 LED panel (part 3)

1. Disconnect all cables from the LED panel [1][2].
2. To access the mounting screws you have to remove the Digital Media Reader.
3. Remove the shielding mounting screws [3]: one of them is hidden under a piece of tape.
4. Take out the panel.

4.3.13 Woofer

1. Remove all mounting screws.
2. Take out the woofer unit together with its cable.
   Caution: the woofer unit must remain airtight.

4.3.14 Side I/O Panel

1. Disconnect all cables from the panel.
2. Remove all mounting screws (if present) from the panel.
3. Slide the bracket to the right.
4. Release the clamp and take out the panel.

4.4 Display Disassembly

Important: Be sure to work in a dust free environment during the following activities. In addition, the use of (fabric) hand gloves is advised.

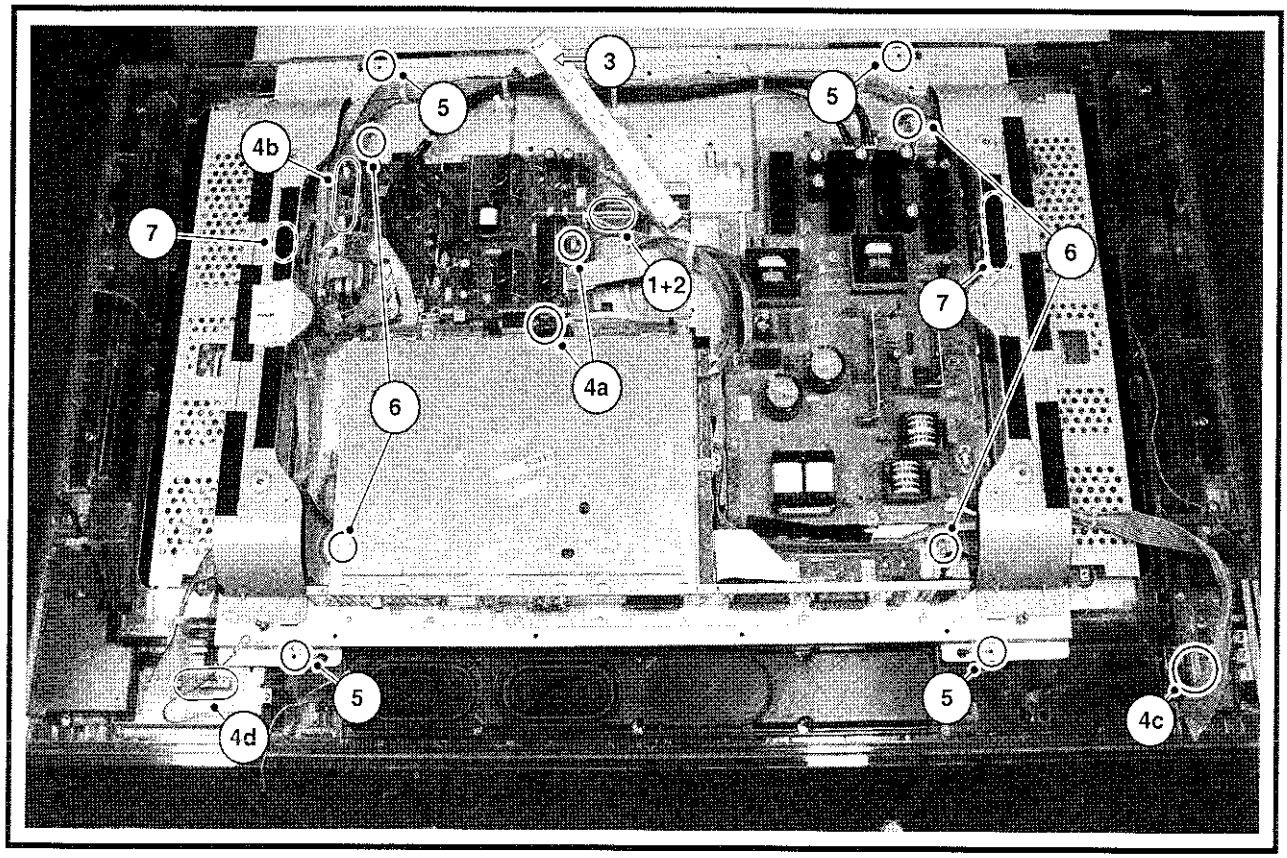

F_15710_140.eps
220905

Figure 4-21 Cable disconnecting overview

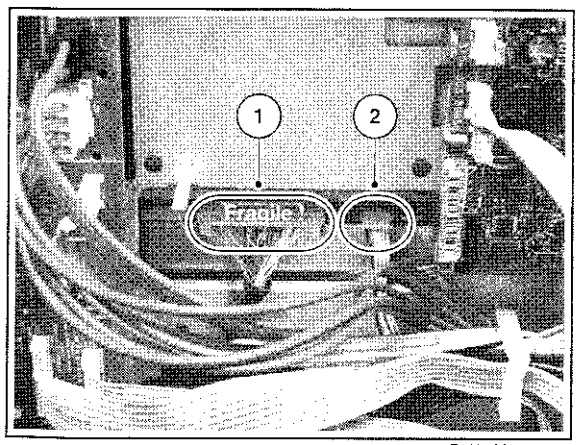

F_15490_018.eps
240605

Figure 4-22 LCD display connectors

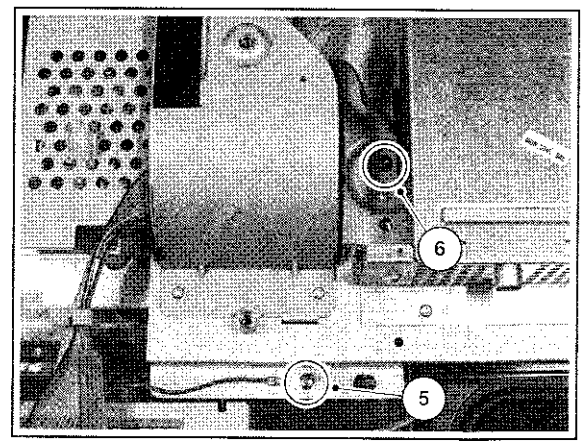

F_15710_139.eps
220905

Figure 4-23 LCD panel screws location

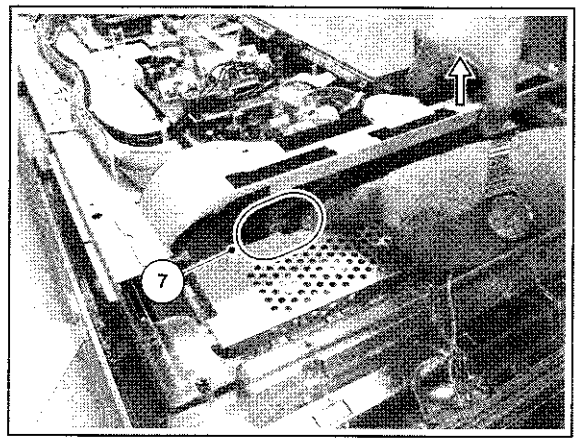

F_15710_138.eps
220905

Figure 4-24 Backlight cable removal (left side)

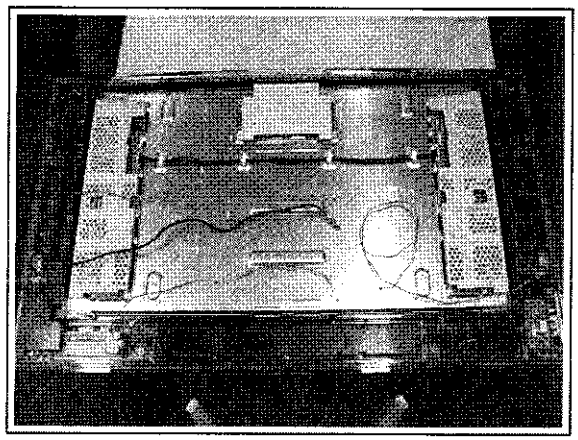

F_15710_136.eps
220905

Figure 4-25 Chassis after PWB frame removal

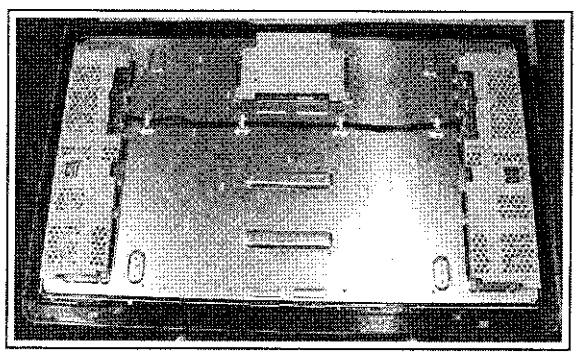

F_15710_162.eps
220905

Figure 4-26 Bare LCD panel (37") after plastic frame removal

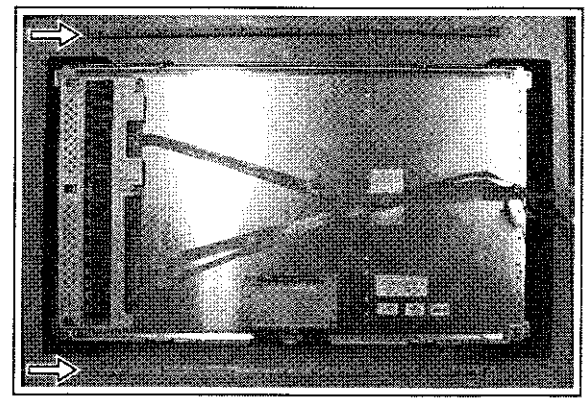

F_15710_137.eps
220905

Figure 4-27 Metal fixation bars 32" model

1. **Important:** Unplug the cables [1] + [2] at the LCD display (cable [2] is only present in 32" models). **Be careful**, as the LVDS connector [1] is very fragile!
2. Remove the Top Control ass'y [3]. No need to unplug.
3. Unplug the following cables **and remove them completely from their cable fixations**:
   - Card reader cable (USB with supply) at SSB [4a].
   - Speaker cables (L, R, and woofer) at SA panel [4b].
   - Flat cable on Side I/O panel [4c].
   - Flat cable on LED panel [4d].
4. Remove all T10 screws [5] from the mounting frame.
5. Remove all T20 mounting LCD panel screws [6].
6. Lift the metal frame (together with all PWBs) from the LCD panel. During lift, free the backlight cables [7].
7. After removal of the metal frame, you can lift the plastic frame from the set.
8. Now, the bare LCD panel is accessible.
   Important: On the 32" LCD display two metal fixation bars are mounted at the top and bottom side (see figure "Metal fixation bars 32" model"). These must be removed before sending the display to Service if the display is defective.

4.5 Set Re-assembly

To re-assemble the whole set, execute all processes in reverse order.

Note: While re-assembling the TV, make sure that:

- All cables are placed and connected in their original position (see figure "Chassis cable dressing" in the beginning of this chapter and/or the "Wiring Diagram" in chapter 6).
- LVDS connector (SSB) is secured with plastic clamp.
- The "grounding" wire between metal shielding of the LED panel and the TV frame is connected.

5. Service Modes, Error Codes, and Fault Finding

Index of this chapter:
5.1 Test Points
5.2 Service Modes
5.3 Stepwise Start-up
5.4 Service Tools
5.5 Error Codes
5.6 The Blinking LED Procedure
5.7 Protections
5.8 Fault Finding and Repair Tips
5.9 Software Upgrading

5.1 Test Points

The chassis is equipped with test points (Fxxx) printed on the circuit board assemblies. As most signals are digital, it will be difficult to measure waveforms with a standard oscilloscope. Several key ICs are capable of generating test patterns, which can be controlled via ComPair. In this way it is possible to determine which part is defective.

Perform measurements under the following conditions:
- Service Default Mode.
- Video: Colour bar signal.
- Audio: 3 kHz left, 1 kHz right.

5.2 Service Modes

Service Default mode (SDM) and Service Alignment Mode (SAM) offers several features for the service technician, while the Customer Service Mode (CSM) is used for communication between the call centre and the customer.

This chassis also offers the option of using ComPair, a hardware interface between a computer and the TV chassis. It offers the abilities of structured troubleshooting, error code reading, and software version read-out for all chassis.
Minimum requirements for ComPair: a Pentium processor, a Windows OS, and a CD-ROM drive (see also paragraph "ComPair").

5.2.1 Service Default Mode (SDM)

Purpose
- To create a pre-defined setting, to get the same measurement results as given in this manual.
- To override SW protections (only applicable for protections detected by stand-by processor) and make the TV start up to the step just before protection (a sort of automatic stepwise start up). See paragraph "Stepwise Start Up".
- To start the blinking LED procedure (not valid in protection mode).

Specifications

Table 5-1 SDM default settings

Region	Freq. (MHz)	Default system
Europe, AP-PAL/Multi	475.25	PAL B/G
NAFTA, AP-NTSC, LATAM	61.25 (ch. 3)	NTSC M

- All picture settings at 50% (brightness, colour, contrast).
- All sound settings at 50%, except volume at 25%.
- All service-unfriendly modes (if present) are disabled, like:
  - (Sleep) timer.
  - Child/parental lock.
  - Picture mute (blue mute or black mute).
  - Automatic volume levelling (AVL).
  - Auto switch "off" (when no video signal was received for 10 minutes).
  - Skip/blank of non-favourite pre-sets.
  - Smart modes.
  - Auto store of personal presets.
  - Auto user menu time-out.

How to Activate SDM
Use one of the following methods:
- Use the standard RC-transmitter and key in the code "062596", directly followed by the "MENU" button.
  Note: It is possible that, together with the SDM, the main menu will appear. To switch it "off", push the "MENU" button again.
- Short for a moment the two solder pads [1] on the SSB, with the indication "SDM". They are located outside the shielding. Activation can be performed in all modes, except when the set has a problem with the Stand-by Processor. See figure "Service mode pads".

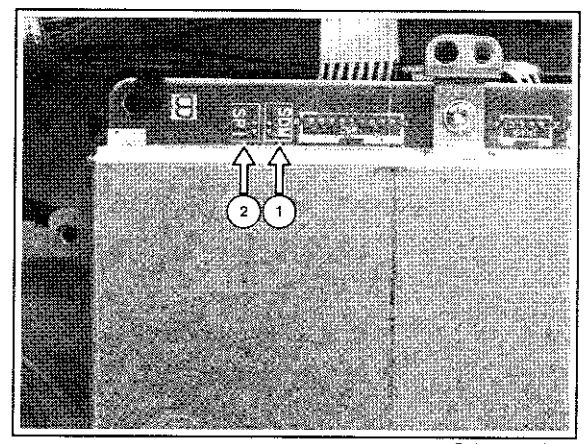

F_15710_150.eps
200905

Figure 5-1 Service mode pads

After activating this mode, "SDM" will appear in the upper right corner of the screen (if you have a picture).

How to Navigate
When you press the "MENU" button on the RC transmitter, the set will toggle between the SDM and the normal user menu (with the SDM mode still active in the background).

How to Exit SDM
Use one of the following methods:
- Switch the set to STAND-BY via the RC-transmitter.
- Via a standard customer RC-transmitter: key in "00"-sequence.

5.2.2 Service Alignment Mode (SAM)

Purpose
- To perform (software) alignments.
- To change option settings.
- To easily identify the used software version.
- To view operation hours.
- To display (or clear) the error code buffer.

How to Activate SAM
Via a standard RC transmitter: key in the code "062596" directly followed by the "INFO" button. After activating SAM with this method a service warning will appear on the screen, you can continue by pressing the red button on the RC.

Contents of SAM:

- **Hardware Info.**
  - **A. VIPER SW Version.** Displays the software version of the VIPER software (main software) (**example:** JX21E-1.2.3.4_12345 = AAAAB_X.Y.W.Z_NNNNN).
    - **AAAA**= the chassis name.
    - **B**= the region: A= AP, E= EU, L= LatAm, U = US.
    - **X.Y.W.Z**= the software version, where X is the main version number (different numbers are not compatible with one another) and Y is the sub version number (a higher number is always compatible with a lower number). The last two digits are used for development reasons only, so they will always be zero in official releases.
    - **NNNNN**= last five digits of 12nc code of the software.
  - **B. SBY PROC Version.** Displays the software version of the stand-by processor.
  - **C. Production Code.** Displays the production code of the TV, this is the serial number as printed on the back of the TV set. Note that if an NVM is replaced or is initialized after corruption, this production code has to be re-written to NVM. ComPair will foresee in a possibility to do this.
- **Operation Hours.** Displays the accumulated total of operation hours (not the stand-by hours). Every time the TV is switched "on/off", 0.5 hours is added to this number.
- **Errors.** (Followed by maximal 10 errors). The most recent error is displayed at the upper left (for an error explanation see paragraph "Error Codes").
- **Defective Module.** Here the module that generates the error is displayed. If there are multiple errors in the buffer, which are not all generated by a single module, there is probably another defect. It will then display the message "UNKNOWN" here.
- **Reset Error Buffer.** When you press "cursor right" and then the "OK" button, the error buffer is reset.
- **Alignments.** This will activate the "ALIGNMENTS" sub-menu.
- **Dealer Options.** Extra features for the dealers.
- **Options.** Extra features for Service.
- **Initialise NVM.** When an NVM was corrupted (or replaced) in the former EMG based chassis, the microprocessor replaces the content with default data (to assure that the set can operate). However, all preferences and alignment values are gone now, and option numbers are not correct. Therefore, this was a very drastic way. In this chassis, the procedure is implemented in another way: The moment the processor recognizes a corrupted NVM, the "initialize NVM" line will be highlighted. Now, you can do two things (dependent of the service instructions at that moment):
  - Save the content of the NVM via ComPair for development analysis, **before** initializing. This will give the Service department an extra possibility for diagnosis (e.g. when Development asks for this).
  - Initialize the NVM (same as in the past, however now it happens conscious).

Note: When you have a corrupted NVM, or you have replaced the NVM, there is a high possibility that you will not have picture any more because your display option is not correct. So, before you can initialize your NVM via the SAM, you need to have picture and therefore you need the correct display option. To adapt this option, you can use ComPair (the correct HEX values for the options can be found in the table below) or a new method via a standard RC (described below).

Changing the display option via a standard RC:

Key in the code "062598" directly followed by the "MENU" button and "XXX" (where XXX is the 3 digit decimal display option code as mentioned in the first column of the next table). Make sure to key in all three digits, also the leading zero's.

If the above action is successful, the front LED will go out as an indication that the RC sequence was correct.

After the display option is changed in the NVM, the TV will go to the Stand-by mode.

If the NVM was corrupted or empty before this action, it will be initialised first (loaded with default values). This initialising can take up to 20 seconds.

Table 5-2 Display option code overview

Display Option	HEX	Display Type	Size	Vertical Resolution
000	00	PDP SDI HD V3	42"	768p
001	01	PDP SDI HD V3	50"	768p
002	02	PDP FHP ALiS 1024i	42"	1024i
003	03	LCD LPL	30"	768p
004	04	LCD LPL	37"	768p
005	05	LCD LPL	42"	768p
006	06	LCD SHARP	32"	768p
007	07	PDP SDI SD V3	42"	480p
008	08	PDP FHP ALiS 1024i	37"	1024i
009	09	LCOS XION	-	720p
010	0A	LCD AUO	30"	768p
011	0B	LCD LPL	32"	768p
012	0C	LCD AUO	32"	768p
013	0D	LCD SHARP	37"	768p
014	0E	LCD LPL HD	42"	1080p
015	0F	PDP SDI SD	37"	480p
016	10	PDP FHP ALiS 1080i	37"	1080i
017	11	PDP FHP ALiS 580i	42"	1080i
018	12	PDP FHP	55"	768p
019	13	LCOS VENUS	-	720p
020	14	LCOS VENUS	-	1080p
021	15	LCD LPL	26"	768p
022	16	LCD LPL scanning Backlight	32"	768p
023	17	PDP LG SD	42"	480p
024	18	PDP SDI SD V4	42"	480p
025	19	PDP SDI HD V4	42"	768p
026	1A	PDP FHP HD A2	42"	1024i
027	1B	PDP SDI HD V4	50"	768p
028	1C	LCD Sharp full HD	37"	1080p
029	1D	LCD AUO	32"	768p
030	1E	LCD CMO full HD	37"	1080p
031	1F	LCD Sharp full HD V3.0	37"	1080p
032	20	LCD LPL	20"	768p
033	21	LCD QDI	23"	768p

- **Store.** All options and alignments are stored when pressing "cursor right" and then the "OK"-button
- **SW Maintenance.**
  - **SW Events.** Not useful for Service purposes. In case of specific software problems, the development department can ask for this info.
  - **HW Events.** Not useful for Service purposes. In case of specific software problems, the development department can ask for this info.

How to Navigate

- In SAM, you can select the menu items with the "CURSOR UP/DOWN" key on the RC-transmitter. The selected item will be highlighted. When not all menu items fit on the screen, move the "CURSOR UP/DOWN" key to display the next/previous menu items.
- With the "CURSOR LEFT/RIGHT" keys, it is possible to:
  - (De) activate the selected menu item.
  - (De) activate the selected sub menu.

How to Exit SAM

Use one of the following methods:

- Press the "MENU" button on the RC-transmitter.
- Switch the set to STAND-BY via the RC-transmitter.

5.2.3 Customer Service Mode (CSM)

Purpose

When a customer is having problems with his TV-set, he can call his dealer or the Customer Helpdesk. The service technician can then ask the customer to activate the CSM, in order to identify the status of the set. Now, the service technician can judge the severity of the complaint. In many cases, he can advise the customer how to solve the problem, or he can decide if it is necessary to visit the customer.
The CSM is a read only mode; therefore, modifications in this mode are not possible.

How to Activate CSM

Key in the code "123654" via the standard RC transmitter.

Note: Activation of the CSM is only possible if there is no (user) menu on the screen!

How to Navigate

By means of the "CURSOR-DOWN/UP" knob on the RC-transmitter, you can navigate through the menus.

Contents of CSM

- **SW Version (example:** JX21E-1.2.3.4_12345**).** Displays the built-in main software version. In case of field problems related to software, software can be upgraded. As this software is consumer upgradeable, it will also be published on the Internet.
- **SBY Processor Version.** Displays the built-in stand-by processor software version. Upgrading this software will be possible via a PC and a ComPair interface (see chapter Software upgrade).
- **Set Type.** This information is very helpful for a helpdesk/ workshop as reference for further diagnosis. In this way, it is not necessary for the customer to look at the rear of the TV-set. Note that if an NVM is replaced or is initialized after corruption, this set type has to be re-written to NVM. ComPair will foresee a possibility to do this.
- **Production Code.** Displays the production code (the serial number) of the TV. Note that if an NVM is replaced or is initialized after corruption, this production code has to be re-written to NVM. ComPair will foresee a possibility to do this.
- **Code 1.** Gives the latest five errors of the error buffer. As soon as the built-in diagnose software has detected an error the buffer is adapted. The last occurred error is displayed on the leftmost position. Each error code is displayed as a 2-digit number. When less than 10 errors occur, the rest of the buffer is empty (00). See also paragraph Error Codes for a description.
- **Code 2.** Gives the first five errors of the error buffer. See also paragraph Error Codes for a description.
- **Headphone Volume.** Gives the last status of the headphone volume, as set by the customer. The value can vary from 0 (volume is minimum) to 100 (volume is maximum). Change via "MENU", "TV", "SOUND", "HEADPHONE VOLUME".
- **Dolby.** Indicates whether the received transmitter transmits Dolby sound ("ON") or not ("OFF"). Attention: The presence of Dolby can only be tested by the software on the Dolby Signalling bit. If a Dolby transmission is received without a Dolby Signalling bit, this indicator will show "OFF" even though a Dolby transmission is received.
- **Surround Mode.** Indicates the by the customer selected sound mode (or automatically chosen mode). Possible values are "STEREO" and "VIRTUAL DOLBY SURROUND". Change via "MENU", "TV", "SOUND", "SURROUND MODE". It can also have been selected automatically by signalling bits (internal software).
- **Tuner Frequency.** Indicates the frequency the selected transmitter is tuned to.
- **Digital options.** Indicates the selected digital mode. Possible values are "STANDARD" and "PIXEL PLUS 2" and "MOVIE PLUS". Change via "MENU", "TV", "PICTURE", "DIGITAL OPTIONS".
- **TV System.** Gives information about the video system of the selected transmitter.
  - BG: PAL BG signal received
  - DK: PAL DK signal received
  - L/La: SECAM L/La signal received
  - I: PAL I signal received
  - M: NTSC M signal received
  - ATSC: ATSC signal received
- **Centre Mode.** Not applicable.
- **DNR.** Gives the selected DNR setting (Dynamic Noise Reduction), "OFF", "MINIMUM", "MEDIUM", or "MAXIMUM". Change via "MENU", "TV", "PICTURE", "DNR"
- **Noise Figure.** Gives the noise ratio for the selected transmitter. This value can vary from 0 (good signal) to 127 (average signal) and to 255 (bad signal). For some software versions, the noise figure will only be valid when "Active Control" is set to "medium" or "maximum" before activating CSM.
- **Source.** Indicates which source is used and the video/ audio signal quality of the selected source. (Example: Tuner, Video/NICAM) Source: "TUNER", "EXT1", "EXT2", "EXT3", "EXT4", "HDMI", "SIDE" and "DVI". Video signal quality: "VIDEO", "S-VIDEO", "RGB 1FH", "YPBPR 1FH 480P", "YPBPR 1FH 576P", "YPBPR 1FH 1080I", "YPBPR 2FH 480P", "YPBPR 2FH 576P", "YPBPR 2FH 1080I", "RGB 2FH 480P", "RGB 2FH 576P", "RGB 2FH 1080I", "720p" or "Unsupported". Audio signal quality: "STEREO", "SPDIF 1", "SPDIF 2", or "SPDIF".
- **Audio System.** Gives information about the audible audio system. Possible values are "Stereo", "Mono", "Mono selected", "Analog In: No Dig. Audio", "Dolby Digital 1+1", "Dolby Digital 1/0", "Dolby Digital 2/0", "Dolby Digital 2/1", "Dolby Digital 2/2", "Dolby Digital 3/0", "Dolby Digital 3/1", "Dolby Digital 3/2", "Dolby Digital Dual I", "Dolby Digital Dual II", "MPEG 1+1", "MPEG 1/0", "MPEG 2/0". This is the same info as you will see when pressing the "INFO" button in normal user mode (item "signal"). In case of ATSC receiving there will be no info displayed.
- **Tuned Bit.** Indicates if the selected preset is automatically tuned (via "Automatic Installation" in the setup menu) or via the automatic tuning system of the TV. In this case "Tuned bit" will show "YES". If the TV was not able to auto-tune to the correct frequency, this item will show "NO". So if "NO" is displayed, it could indicate that the customer has manually tuned to a frequency which was too for to a correct frequency, that the TV was not able to auto-tune any more.
- **On timer.** Indicates if the "On timer" is set "ON" or "OFF" and when it is set to "ON", also start time, start day and program number is displayed. Change via "MENU", "TV", "FEATURES", "ON TIMER".
- **Preset Lock.** Indicates if the selected preset has a child lock: "LOCKED" or "UNLOCKED". Change via "MENU", "TV", "FEATURES", "CHILD LOCK" and "CUSTOM LOCK" and "CHANNEL LOCK".
- **Child lock.** Indicates if "Child lock" is set to "UNLOCK", "LOCKED" or "CUSTOM LOCK. Change via "MENU", "TV", "FEATURES", "CHILD LOCK".
- **Lock after.** Indicates at what time the channel lock is set: "OFF" or e.g. "18:45" (lock time). Change via "MENU", "TV", "FEATURES", "CHILD LOCK", "CUSTOM LOCK" and "LOCK AFTER".
- **Options 1.** Gives the option codes of option group 1 as set in SAM (Service Alignment Mode).
- **Options 2.** Gives the option codes of option group 2 as set in SAM (Service Alignment Mode).
- **AVL.** Indicates the last status of AVL (Automatic Volume Level): "ON" or "OFF". Change via "MENU", "TV", "SOUND", "AVL". AVL can not be set in case of digital audio reception (e.g. Dolby Digital or AC3)
- **Delta Volume.** Indicates the last status of the delta volume for the selected preset as set by the customer: from "-12"

to "+12". Change via "MENU", "TV", "SOUND", "DELTA VOLUME".
- **HDMI key validity.** Indicates the key's validity.

How to Exit CSM
Press any key on the RC-transmitter (with exception of the "CHANNEL +/-", "VOLUME", "MUTE" and digit (0-9) keys).

5.3 Stepwise Start-up

The stepwise start-up method, as known from FTL/FTP sets (EMG based sets) is not valid any more. The situation for this chassis is as follows: when the TV is in a protection state detected via the Stand-by Processor (and thus blinking an error) **and** SDM is activated via shortcutting the pins on the SSB, the TV starts up until it reaches the situation just before protection. So, this is a kind of automatic stepwise start-up. In combination with the start-up diagrams below, you can see which supplies are present at a certain moment.
Important to know here is, that if e.g. the 3V3 detection fails (and thus error 11 is blinking) **and** the TV is restarted via SDM, the Stand-by Processor will enable the 3V3, but will not go to protection now. The TV will stay in this situation until it is reset (Mains/AC Power supply interrupted).

The abbreviations "SP" and "MP" in the figures stand for:
- SP: protection or error detected by the **S**tand-by **P**rocessor.
- MP: protection or error detected by the VIPER **M**ain **P**rocessor.

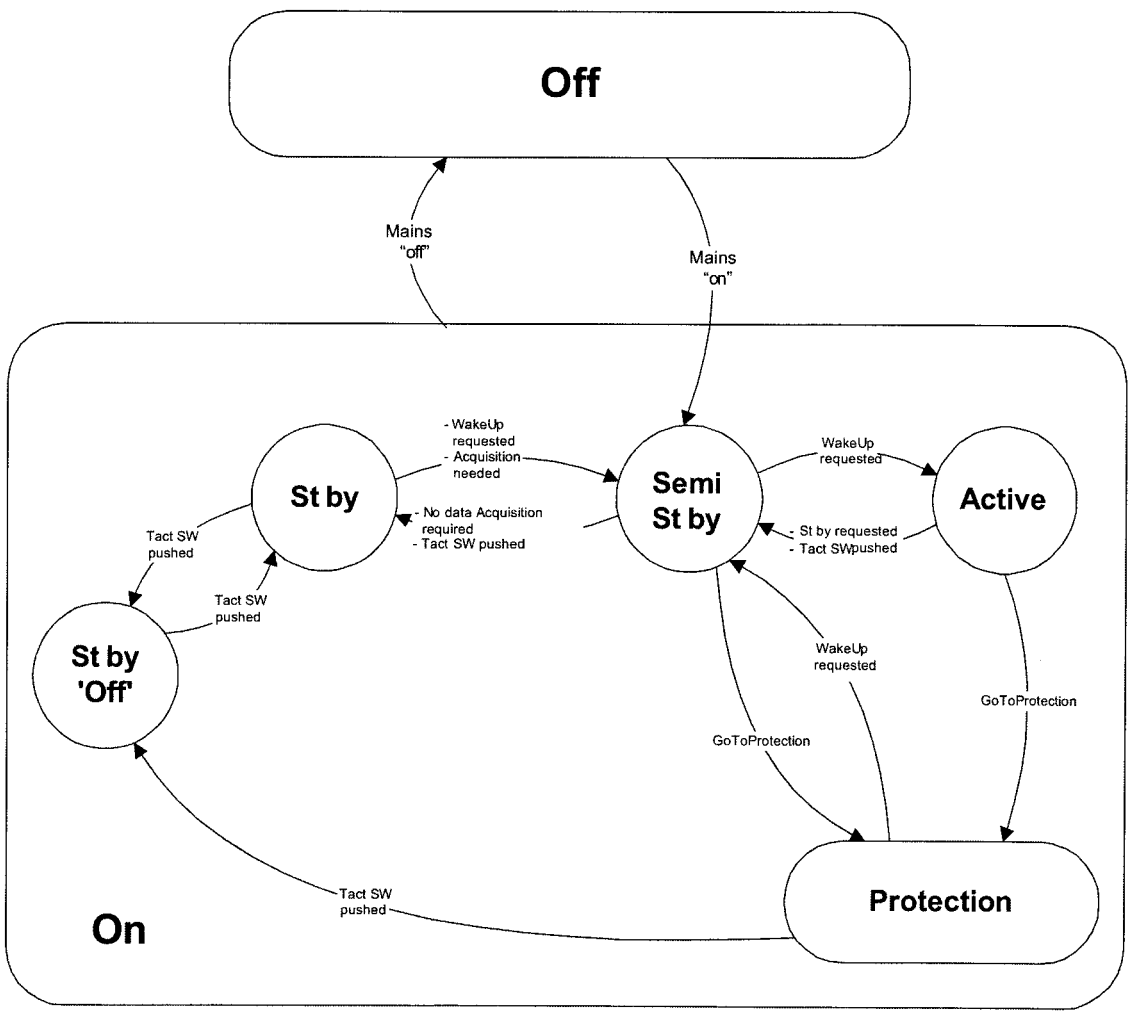

F_15710_151.eps
200905

Figure 5-2 Transition diagram

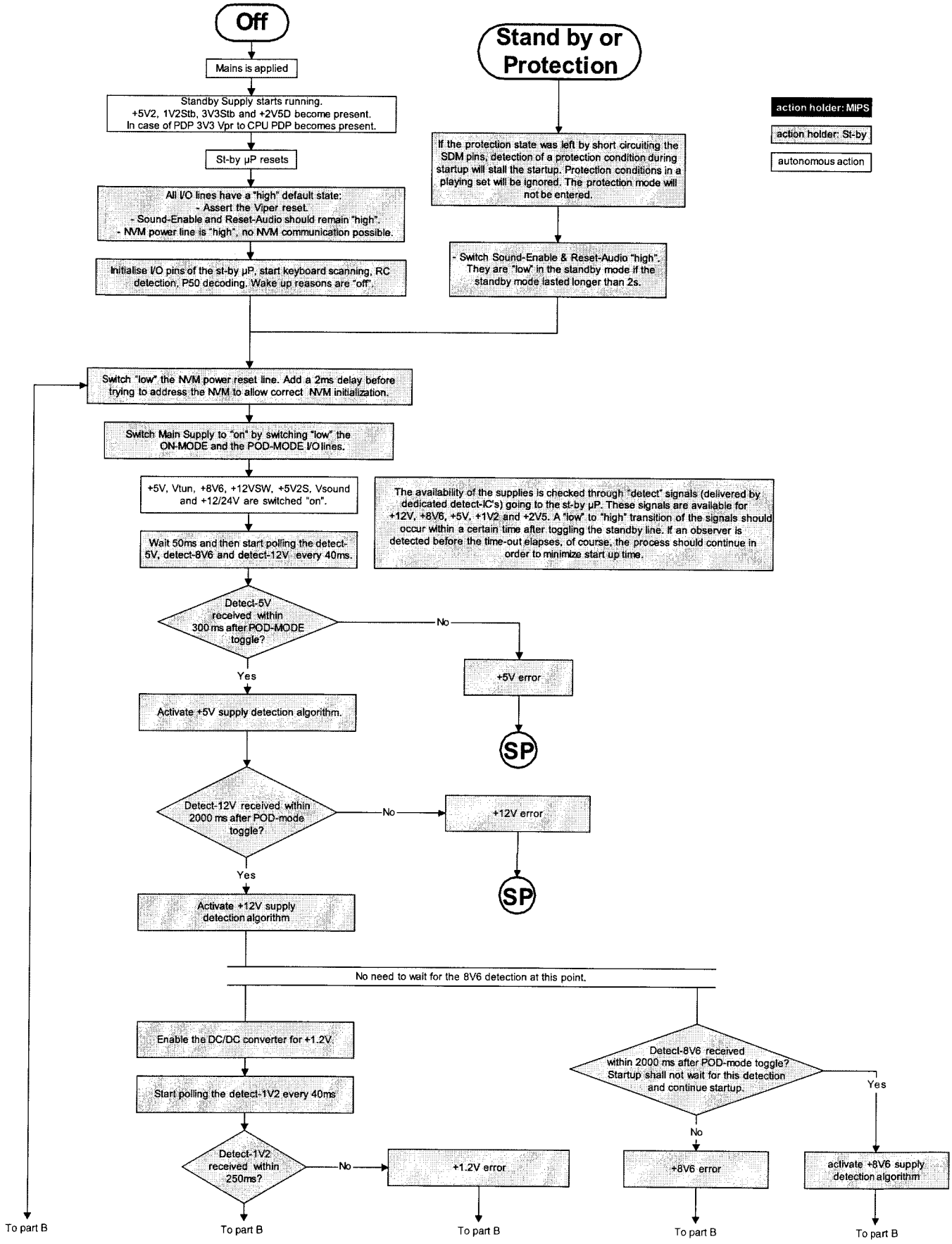

F_15710_152a.eps
200905

Figure 5-3 "Off" to "Semi Stand-by" flowchart (part 1)

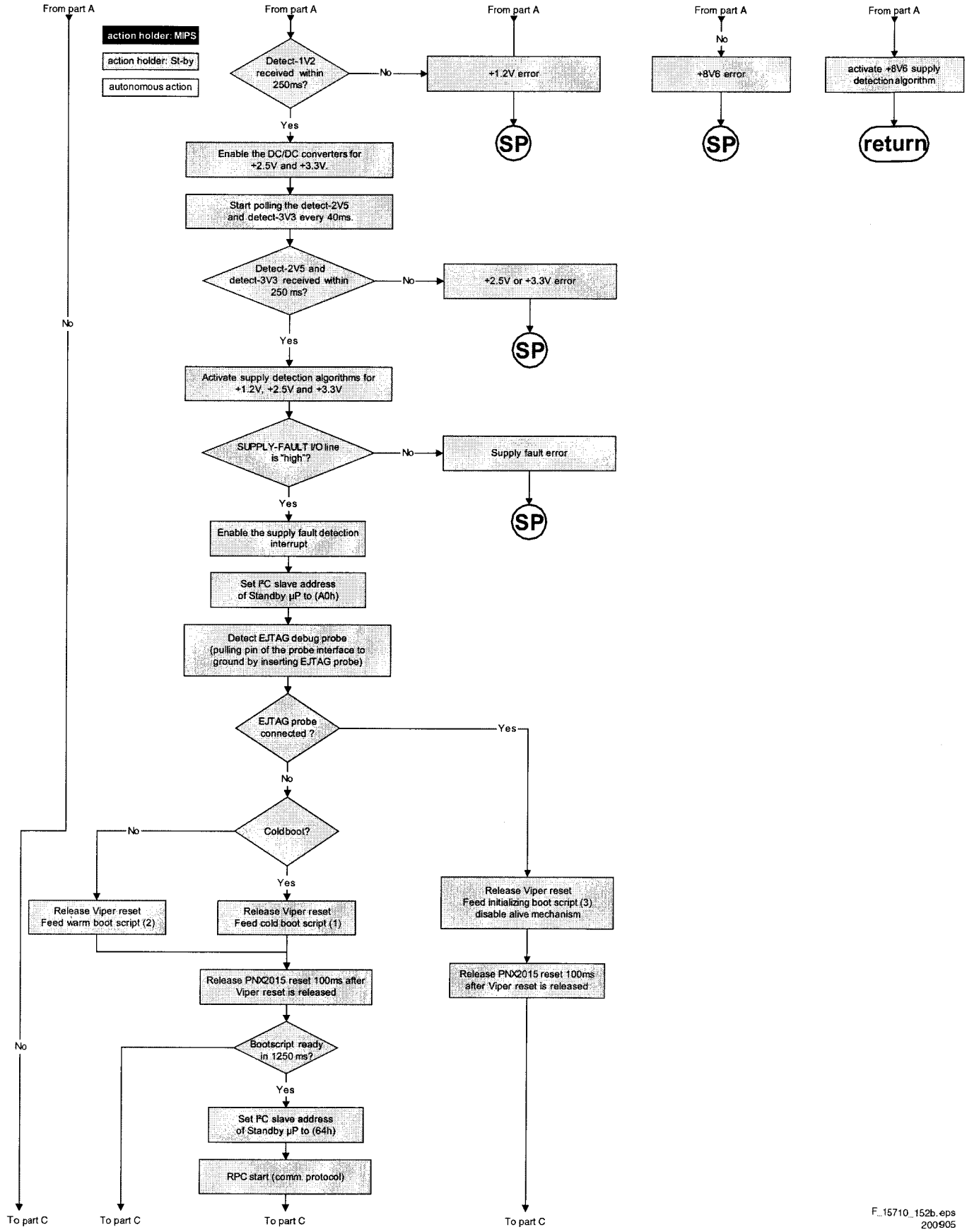

Figure 5-4 "Off" to "Semi Stand-by" flowchart (part 2)

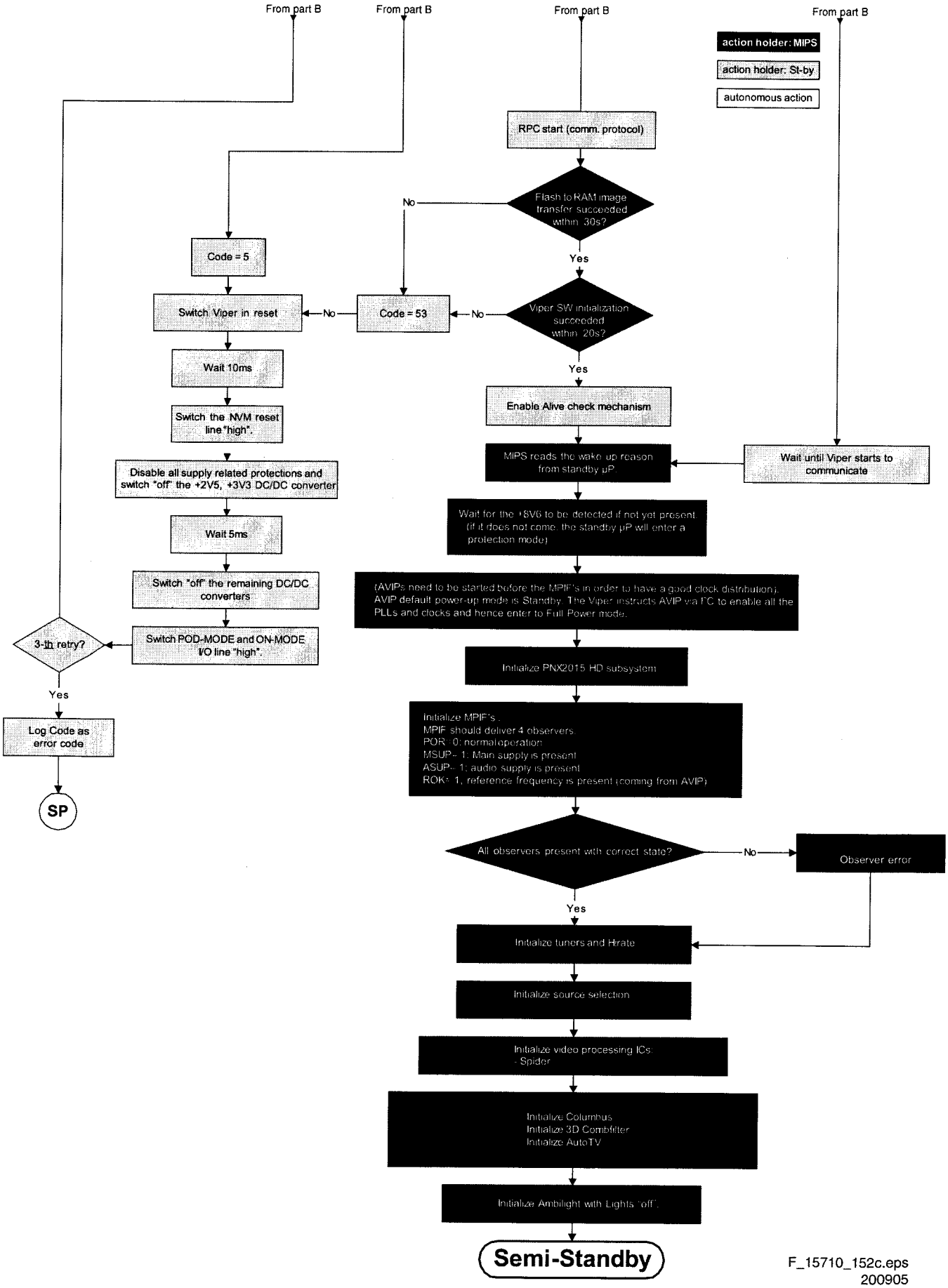

Figure 5-5 "Off" to "Semi Stand-by" flowchart (part 3)

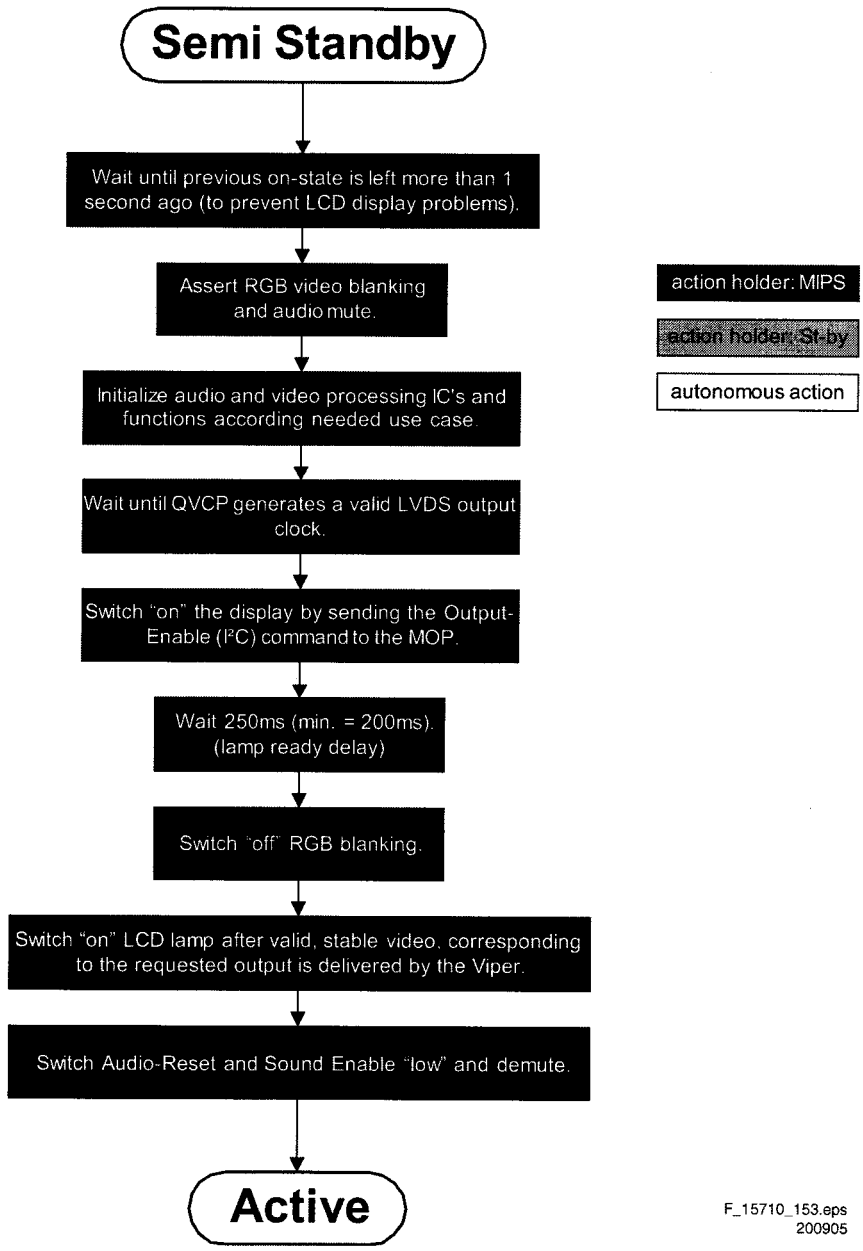

Figure 5-6 "Semi Stand-by" to "Active" flowchart

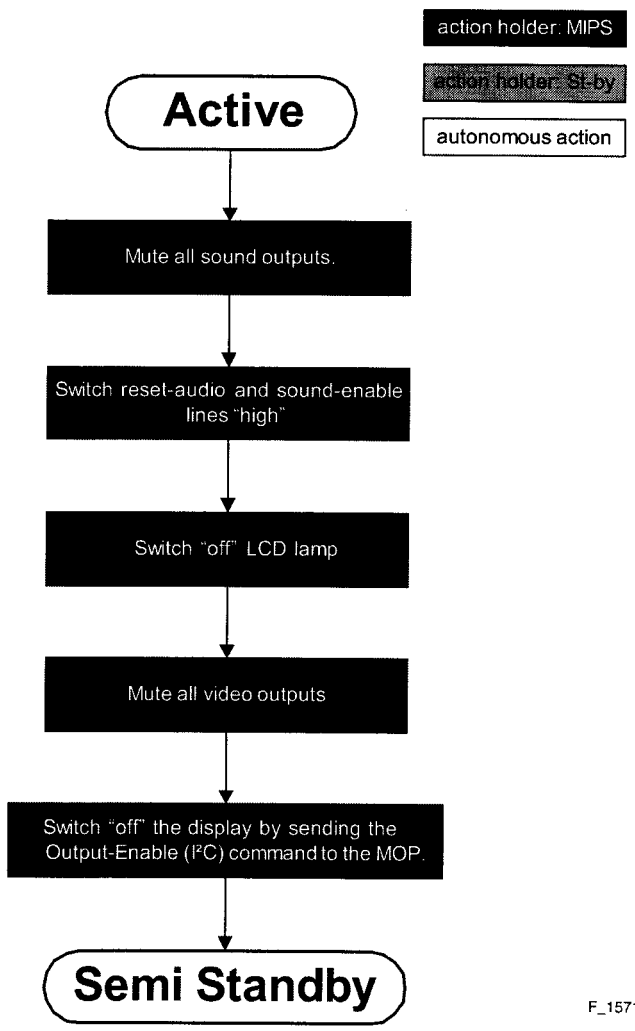

Figure 5-7 "Active" to "Semi Stand-by" flowchart

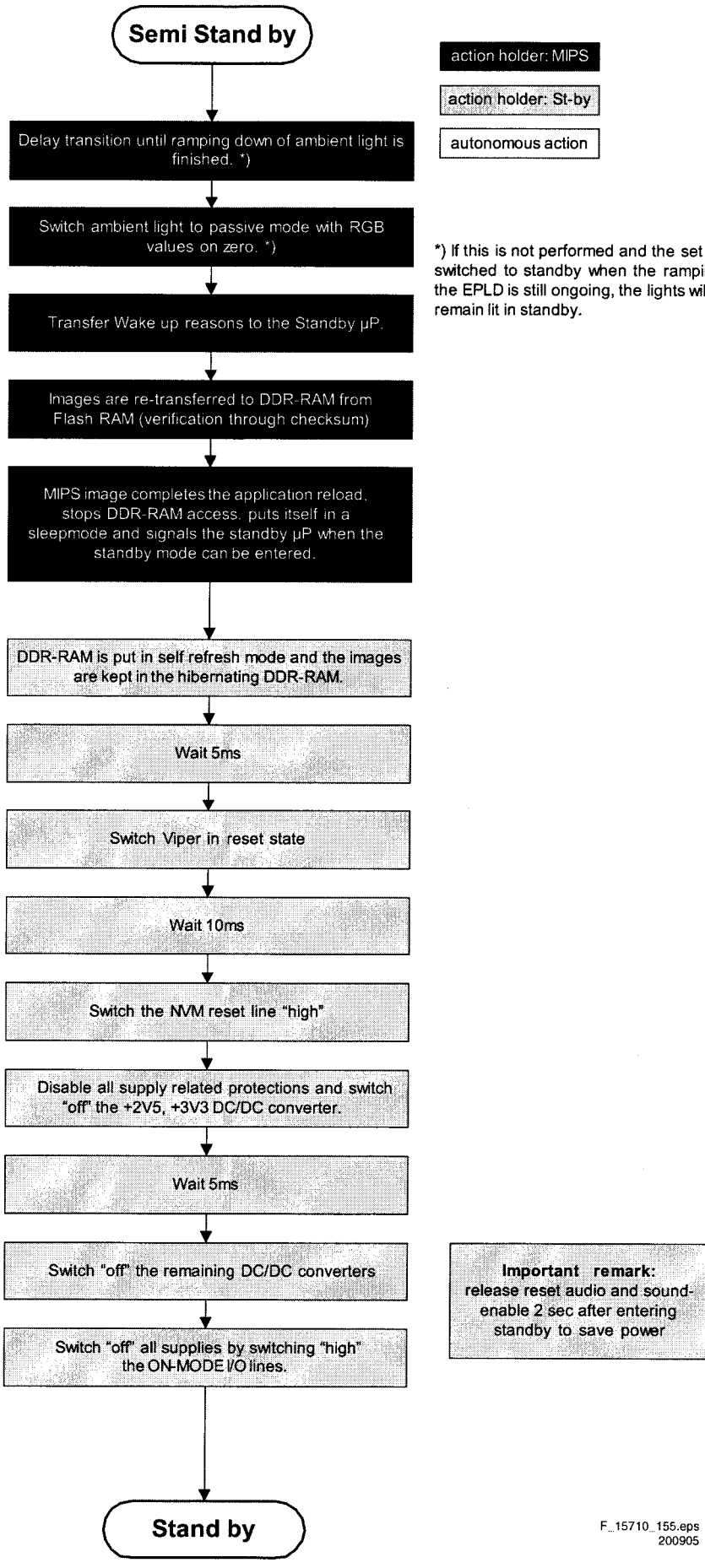

Figure 5-8 "Semi Stand-by" to "Stand-by" flowchart

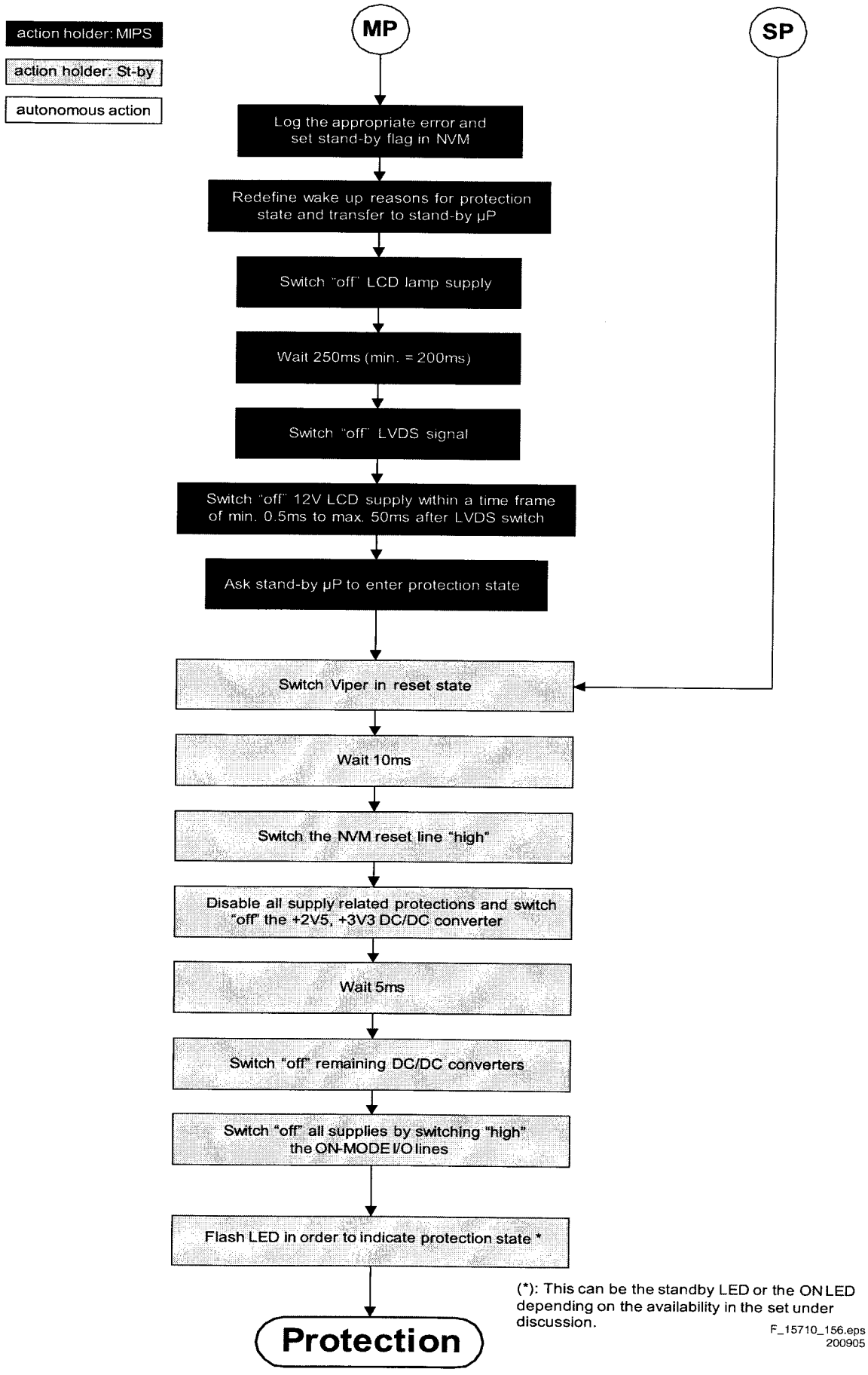

Figure 5-9 "Protection" flowchart

5.4 Service Tools

5.4.1 ComPair

Introduction

ComPair (Computer Aided Repair) is a service tool for Philips Consumer Electronics products. ComPair is a further development on the European DST (service remote control), which allows faster and more accurate diagnostics. ComPair has three big advantages:

1. ComPair helps you to quickly get an understanding on how to repair the chassis in a short time by guiding you systematically through the repair procedures.
2. ComPair allows very detailed diagnostics (on I^2C level) and is therefore capable of accurately indicating problem areas. You do not have to know anything about I^2C commands yourself because ComPair takes care of this.
3. ComPair speeds up the repair time since it can automatically communicate with the chassis (when the microprocessor is working) and all repair information is directly available. When ComPair is installed together with the Force/SearchMan electronic manual of the defective chassis, schematics and PWBs are only a mouse click away.

Specifications

ComPair consists of a Windows based fault finding program and an interface box between PC and the (defective) product. The ComPair interface box is connected to the PC via a serial (or RS-232) cable.
For this chassis, the ComPair interface box and the TV communicate via a bi-directional service cable via the service connector(s).

The ComPair fault finding program is able to determine the problem of the defective television. ComPair can gather diagnostic information in two ways:

- Automatically (by communicating with the television): ComPair can automatically read out the contents of the entire error buffer. Diagnosis is done on I^2C/UART level. ComPair can access the I^2C/UART bus of the television. ComPair can send and receive I^2C/UART commands to the microcontroller of the television. In this way, it is possible for ComPair to communicate (read and write) to devices on the I^2C/UART buses of the TV-set.
- Manually (by asking questions to you): Automatic diagnosis is only possible if the microcontroller of the television is working correctly and only to a certain extent. When this is not the case, ComPair will guide you through the fault finding tree by asking you questions *(e.g. Does the screen give a picture? Click on the correct answer: YES / NO)* and showing you examples *(e.g. Measure test-point I7 and click on the correct oscillogram you see on the oscilloscope).* You can answer by clicking on a link *(e.g. text or a waveform picture)* that will bring you to the next step in the fault finding process.

By a combination of automatic diagnostics and an interactive question / answer procedure, ComPair will enable you to find most problems in a fast and effective way.

How to Connect

This is described in the chassis fault finding database in ComPair.

Caution: It is compulsory to connect the TV to the PC as shown in the next picture (with the ComPair interface in between), as the ComPair interface acts as a level shifter. If one connects the TV directly to the PC (via UART), ICs will be blown!

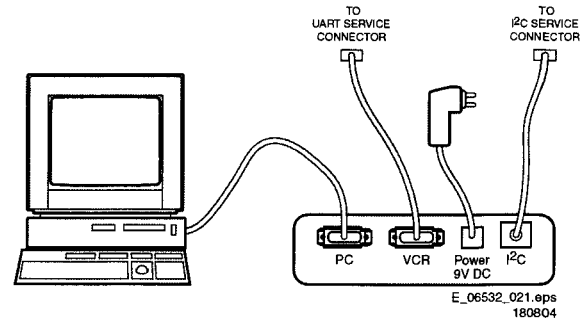

Figure 5-10 ComPair interface connection

How to Order

ComPair order codes:

- Starter kit ComPair32/SearchMan32 software and ComPair interface (excl. transformer): 3122 785 90450.
- ComPair interface (excl. transformer): 4822 727 21631.
- Starter kit ComPair32 software (registration version): 3122 785 60040.
- ComPair32 CD (update): 3122 785 60070 (year 2002), 3122 785 60110 (year 2003 onwards).
- ComPair firmware upgrade IC: 3122 785 90510.
- Transformer (non-UK): 4822 727 21632.
- Transformer (UK): 4822 727 21633.
- ComPair interface cable: 3122 785 90004.
- ComPair interface extension cable: 3139 131 03791.
- ComPair UART interface cable: 3122 785 90630.

Note: If you encounter any problems, contact your local support desk.

5.4.2 LVDS Tool

Introduction

This service tool (also called "ComPair Assistant 1") may help you to identify, in case the TV does not show any picture, whether the Small Signal Board (SSB) **or** the display of a Flat TV is defective.

Since 2004, the LVDS output connectors in our Flat TV models are standardised (with some exceptions). With the two delivered LVDS interface cables (31p and 20p) you can cover most chassis (in special cases, an extra cable will be offered).

When operating, the tool will show a small (scaled) picture on a VGA monitor. Due to a limited memory capacity, it is not possible to increase the size when processing high-resolution LVDS signals (> 1280x960). Below this resolution, or when a DVI monitor is used, the displayed picture will be full size.

Generally this tool is intended to determine if the SSB is working or not. Thus to determine if LVDS, RGB, and sync signals are okay.

How to Connect

Connections are explained in the user manual, which is packed with the tool.

Note: To use the LVDS tool, you must have ComPair release 2004-1 (or later) on your PC (engine version >= 2.2.05).
For every TV type number and screen size, one must choose the proper settings via ComPair. The ComPair file will be updated regularly with new introduced chassis information.

How to Order

- LVDS tool (incl. two LVDS cables: 31p and 20p): 3122 785 90671.
- LVDS tool Service Manual: 3122 785 00810.
- LVDS cable 31p/300/31p (for full HD displays): 3122 785 90861.

5.5 Error Codes

5.5.1 Introduction

The error code buffer contains all detected errors since the last time the buffer was erased. The buffer is written from left to right, new errors are logged at the left side, and all other errors shift one position to the right.
When an error occurs, it is added to the list of errors, provided the list is not full or the error is a protection error.
When an error occurs and the error buffer is full, then the new error is not added, and the error buffer stays intact (history is maintained), except when the error is a protection error.
To prevent that an occasional error stays in the list forever, the error is removed from the list after more than 50 hrs. of operation.
When multiple errors occur (errors occurred within a short time span), there is a high probability that there is some relation between them.

Basically there are three kinds of errors:

- **Errors detected by the Stand-by Processor.** These errors will always lead to protection and an automatic start of the blinking LED for the concerned error (see paragraph "The Blinking LED Procedure"). In these cases SDM can be used to start up (see chapter "Stepwise Start-up"). Note that it can take up to 90 seconds before the TV goes to protection and starts blinking the error (e.g. error 53)
- **Errors detected by VIPER that lead to protection.** In this case the TV will go to protection and the front LED will blink at 3 Hz. Depending on the software version it is possible that further diagnosis via service modes is not possible here (see also paragraph "Error Codes" -> "Error Buffer" -> "Extra Info").
- **Errors detected by VIPER that do not lead to protection.** In this case the error can be read out via ComPair, via blinking LED method, or in case you have picture, via SAM.

5.5.2 How to Read the Error Buffer

Use one of the following methods:

- On screen via the SAM (only if you have a picture). E.g.:
  - **00 00 00 00 00**: No errors detected
  - **06 00 00 00 00**: Error code 6 is the last and only detected error
  - **09 06 00 00 00**: Error code 6 was first detected and error code 9 is the last detected error
- Via the blinking LED procedure (when you have no picture). See next paragraph.
- Via ComPair.

5.5.3 How to Clear the Error Buffer

Use one of the following methods:

- By activation of the "RESET ERROR BUFFER" command in the SAM menu.
- With a normal RC, key in sequence "MUTE" followed by "062599" and "OK".
- With a DST, key in sequence "DIAGNOSE" - "99" - "OK".
- If the content of the error buffer has not changed for 50+ hours, it resets automatically.

5.5.4 Error Buffer

In case of non-intermittent faults, clear the error buffer before you begin the repair (**before** clearing the buffer, write down the content, as this history can give you significant information).
This to ensure that old error codes are no longer present.
If possible, check the entire contents of the error buffer. In some situations, an error code is only the result of another error code and not the actual cause (e.g., a fault in the protection detection circuitry can also lead to a protection).
There are several mechanisms of error detection:

- Via error bits in the status registers of ICs.
- Via polling on I/O pins going to the stand-by processor.
- Via sensing of analogue values on the stand-by processor.
- Via a "not acknowledge" of an I^2C communication

Take notice that some errors need more than 90 seconds before they start blinking. So in case of problems wait 2 minutes from start-up onwards, and then check if the front LED is blinking.

Table 5-3 Error code overview

Error	Description	Error/Prot	Detected by	Device	Schematic	Defective module	Result
1	I^2C1	P	VIPER	n.a.	B7A	I^2C1_blocked	Protection + 3 Hz blinking
2	I^2C2	P	VIPER	n.a.	B7A	I^2C2_blocked	Protection + 3 Hz blinking
3	I^2C3	P	Stby µP	n.a.	B7A	/	Protection + Error blinking
4	I^2C4	P	VIPER	n.a.	B7A	I^2C4_blocked	Protection + 3 Hz blinking
5	VIPER does not boot	P	Stby µP	PNX8550	B7E	/	Protection + Error blinking
6	5V supply	P	Stby µP	n.a.	B8A	/	Protection + Error blinking
7	8V6 supply	P	Stby µP	n.a.	B8A	/	Protection + Error blinking
8	1.2V DC/DC	P	Stby µP	n.a.	B8A	/	Protection + Error blinking
9	2.5V DC/DC	P	Stby µP	n.a.	B8A	/	Protection + Error blinking
11	3.3V DC/DC	P	Stby µP	n.a.	B8A	/	Protection + Error blinking
12	12V supply	P	Stby µP	n.a.	B8A	/	Protection + Error blinking
14	Supply Class D amplifiers	P	Stby µP	n.a.	B8A	/	Protection + Error blinking
17	MPIF1 audio supply	E	VIPER	PNX3000	B4D	IF I/O	Error logged
18	MPIF1 ref. freq.	E	VIPER	PNX3000	B4B	IF I/O	Error logged
22	MPIF2 audio supply	E	VIPER	PNX3000	B4H	IF I/O	Error logged
23	MPIF2 ref. freq.	E	VIPER	PNX3000	B4F	IF I/O	Error logged
25	Supply fault	P	Stby µP	n.a.	B5E	/	Protection + Error blinking
27	Phoenix	E	VIPER	PNX2015B	B5E	HD subsystem	Error logged
28	MOP	E	VIPER	XC3S	B9D	Output processor	Error logged
29	AVIP1	E	VIPER	PNX2015	B5E	AV input processor 1	Error logged
31	AVIP2	E	VIPER	PNX2015	B5E	AV input processor 2	Error logged
32	MPIF1	E	VIPER	PNX3000	B4B	Analog 1 front end 1	Error logged
33	MPIF2	E	VIPER	PNX3000	B4F	Analog 1 front end 2	Error logged

Error	Description	Error/Prot	Detected by	Device	Schematic	Defective module	Result
34	Tuner1	E	VIPER	/	B2	Tuner 1	Error logged
35	Tuner2	E	VIPER	/	B3	Tuner 1	Error logged
38	I/O Expander audio	E	VIPER	PCA9554	B14B	Audio I/O Expander	Error logged
43	Hi Rate Front End	E	VIPER	TDA9975	B11B	HDMI	Error logged
44	Main NVM	E	VIPER	M24C64	B8A	/	Error logged
45	Columbus 1	E	VIPER	PNX2015	B5E	Comb filter	Error logged
53	VIPER	P	Stby µP	PNX8550	B7A	/	Protection + Error blinking
55	SPIDER	E	VIPER	/	B6A	Video Featuring	Error logged

Extra Info

- **Error 1 (I²C bus 1 blocked).** When this error occurs, the TV will go to protection and the front LED will blink at 3 Hz. Now you can partially restart the TV via the SDM short-cut pins on the SSB. Depending on the software version it is possible that this mechanism does not work. Update the main software to have the latest status.
- **Error 2 (I²C bus 2 blocked).** When this error occurs, the TV will go to protection and the front LED will blink at 3 Hz. Now you can partially restart the TV via the SDM short-cut pins on the SSB. Due to hardware restriction (I²C bus 2 is the fast I²C bus) it will be impossible to start up the VIPER and therefore it is also impossible to read out the error codes via ComPair or via the blinking LED method. With the knowledge that only errors 1, 2 and 4 result in a 3 Hz blinking LED, the range of possible defects is limited. When you have restarted the TV via the SDM short-cut pins, and then pressed "CH+" on your remote control, the TV will go to protection again, and the front LED blink at 3 Hz again. This could be an indication that the problem is related to error 2.
- **Error 3 (I²C bus 3 blocked).** There are only three devices on I²C bus 3: VIPER, Stand-by Processor, and NVM. The Stand-by Processor is the detection device of this error, so this error will only occur if the VIPER or the NVM is blocking the bus. This error will also be logged when the NVM gives no acknowledge on the I²C bus (see error 44). Note that if the 12 V supply is missing (connector 1M46 on the SSB), the DC/DC supply on the SSB will not work. Therefore the VIPER will not get supplies and could block I²C bus 3. So, a missing 12 V can also lead to an error 3.
- **Error 4 (I²C bus 4 blocked).** Same remark as with error 1.
- **Error 5 (VIPER does not boot).** This error will point to a severe hardware problem around the VIPER (supplies not OK, VIPER completely dead, I²C link between VIPER and Stand-by Processor broken, etc...).
- **Error 12 (12 V error).** Except a physical problem with the 12 V itself, it is also possible that there is something wrong with the Audio DC Protection: see paragraph "Hardware Protections" for this.
- **Error 14 (Audio supply).** The detection is done on the audio board itself. Here, the absence of one of the audio supplies is sensed, and will lead to protection and error 14 blinked. For LCD sets this circuit can be found on schematic SA3, for PDP sets this can be found on schematic C.
- **Error 17 (MPIF 1 audio supply).** This error indicates that the 8V-AUD is missing on pin 98 of the MPIF. The result of this missing supply will be that there is no sound on external sources (you will have sound from tuner).
- **Error 22 (MPIF 2 audio supply).** Same remark as for error 17.
- **Error 27 (PNX2015 HD subsystem part error).** Depending on the software version it is possible that the detection mechanism of this error does not function.
- **Error 28 (MOP/EPLD error).** Due to the detection mechanism of the MOP error it is possible that the actual logging of the error can take up to 4 minutes (worst case). So if you want to be sure there is a MOP error, reset the error buffer, restart the TV and wait for 4 minutes before checking the error buffer again. The detection mechanism for this error has been changed to avoid "false" MOP errors.
- **Error 29 (AVIP1).** This error will probably generate extra errors. You will probably also see errors 32 (MPIF) and error 31 (AVIP 2). Error 29 and 31 will always be logged together due to the fact that both AVIPs are inside the PNX2015 and are on the same I²C bus. In this case start looking for the cause around AVIP (part of PNX2015). Depending on the software version it is possible that the detection mechanism of this error does not function.
- **Error 31 (AVIP2).** See info on error 29.
- **Error 44 (NVM).** This error will probably never occur because it is masked by error 3 (I²C bus 3). The detection mechanism for error 3 checks on an I²C acknowledge of the NVM. If NVM gives no acknowledge, the stand-by software assumes that the bus is blocked, the TV goes to protection and error 3 will be blinking.
- **Error 53.** This error will indicate that the VIPER has started to function (by reading his boot script, if this would have failed, error 5 would blink) but initialization was never completed because of hardware peripheral problems (NAND flash, ...) or software initialization problems. Possible cause could be that there is no valid software loaded (try to upgrade to the latest main software version). Note that it takes 90 seconds before the TV goes to protection in this case.
- **Error 55 (SPIDER error).** Depending on the software version it is possible that the detection mechanism of this error does not function.

5.6 The Blinking LED Procedure

5.6.1 Introduction

The blinking LED procedure can be split up into two situations:

- Blinking LED procedure in case of a protection detected by the stand-by processor. In this case the error is automatically blinked. This will be only one error, namely the one that is causing the protection. Therefore, you do not have to do anything special, just read out the blinks. A long blink indicates the decimal digit, a short blink indicates the units.
- Blinking LED procedure in the "on" state. Via this procedure, you can make the contents of the error buffer visible via the front LED. This is especially useful for fault finding, when there is no picture.

When the blinking LED procedure is activated in the "on" state, the front LED will show (blink) the contents of the error-buffer. Error-codes > 10 are shown as follows:

1. "n" long blinks (where "n" = 1 - 9) indicating decimal digit,
2. A pause of 1.5 s,
3. "n" short blinks (where "n"= 1 - 9),
4. A pause of approx. 3 s.
5. When all the error-codes are displayed, the sequence finishes with a LED blink of 3 s,
6. The sequence starts again.

Example: Error 12 9 6 0 0.
After activation of the SDM, the front LED will show:

1. 1 long blink of 750 ms (which is an indication of the decimal digit) followed by a pause of 1.5 s,
2. 2 short blinks of 250 ms followed by a pause of 3 s,
3. 9 short blinks followed by a pause of 3 s,
4. 6 short blinks followed by a pause of 3 s,
5. 1 long blink of 3 s to finish the sequence,
6. The sequence starts again.

5.6.2 How to Activate

Use one of the following methods:

- **Activate the SDM.** The blinking front LED will show the entire contents of the error buffer (this works in "normal operation" mode).
- **Transmit the commands "MUTE" - "062500" - "OK" with a normal RC.** The complete error buffer is shown. Take notice that it takes some seconds before the blinking LED starts.
- **Transmit the commands "MUTE" - "06250x" - "OK" with a normal RC** (where "x" is a number between 1 and 5). When x= 1 the last detected error is shown, x= 2 the second last error, etc.... Take notice that it takes some seconds before the blinking LED starts.

5.7 Protections

5.7.1 Software Protections

Most of the protections and errors use either the stand-by microprocessor or the VIPER controller as detection device. Since in these cases, checking of observers, polling of ADCs, filtering of input values are all heavily software based, these protections are referred to as software protections.
There are several types of software related protections, solving a variety of fault conditions:

- **Protections related to supplies:** check of the 12V, +5V, +8V6, +1.2V, +2.5V and +3.3V.
- **Protections related to breakdown of the safety check mechanism.** E.g. since a lot of protection detections are done by means of the VIPER, failing of the VIPER communication will have to initiate a protection mode since safety cannot be guaranteed any more.

Remark on the Supply Errors
The detection of a supply dip or supply loss during the normal playing of the set does not lead to a protection, but to a cold reboot of the set. If the supply is still missing after the reboot, the TV will go to protection.

Protections during Start-up
During TV start-up, some voltages and IC observers are actively monitored to be able to optimise the start-up speed, and to assure good operation of all components. If these monitors do not respond in a defined way, this indicates a malfunction of the system and leads to a protection. As the observers are only used during start-up, they are described in the start-up flow in detail (see paragraph "Stepwise Start-up").

5.7.2 Hardware Protections

There is one hardware protection in this chassis: "Audio DC Protection". This protection occurs when there is a DC voltage on the speakers. In that case the main supply is switched "off", but the stand-by supply is still working.
In case of LCD supplies, the 12V supply will drop. This will be detected by the stand-by processor, which will start blinking the 12 V error (error 12).

Repair Tips

- If there is an audio DC protection (DC voltage on your speakers), you will probably see error 12 blink in case of LCD TVs. To be sure there is an audio DC protection, disconnect the cable between the SSB and the Audio PWB and also the cable between the Main Supply and the Audio PWB. If the TV starts up, it is very likely that there is DC voltage on the speakers. Check, and replace if necessary, the audio amplifiers.
- It is also possible that you have an audio DC protection because of an interruption in one or both speakers (the DC voltage that is still on the circuit cannot disappear through the speakers).

5.8 Fault Finding and Repair Tips

Read also paragraph "Error Codes" - "Extra Info".

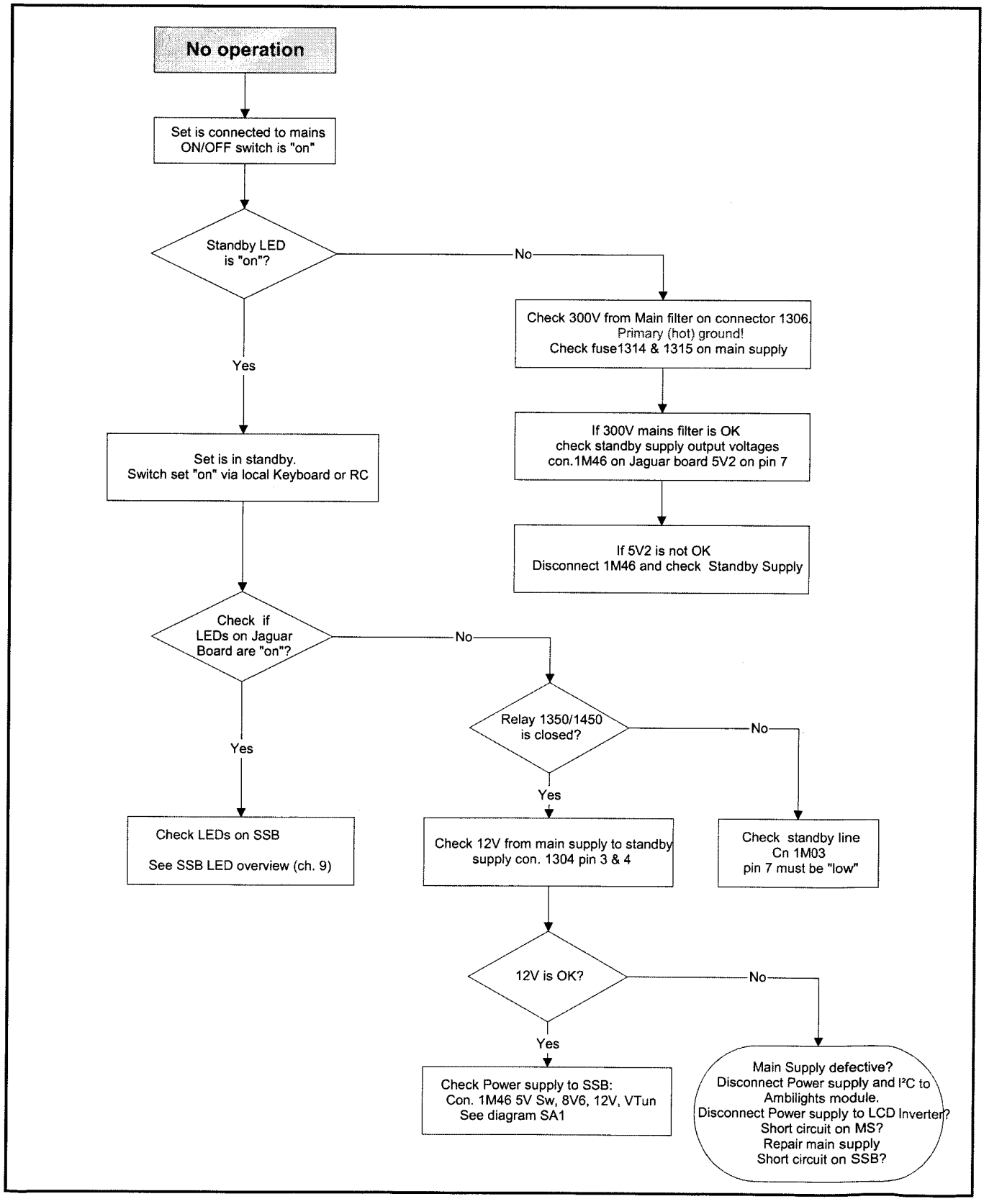

F_15710_186.eps
260905

Figure 5-11 First line fault find tree

5.8.1 Exit "Factory Mode"

When an "F" is displayed in the screen's right corner, this means that the set is in "Factory" mode, and it normally happens after a new SSB has been mounted.
To exit this mode, push the "VOLUME minus" button on the TV's keyboard control for 5 seconds and restart the set.

5.8.2 MPIF

Important things to make the MPIF work:
- Supply.
- Clock signal from the AVIP.
- I^2C from the VIPER.

5.8.3 AVIP

Important things to make the AVIP work:
- Supplies.
- Clock signal from the VIPER.
- I^2C from the VIPER (error 29 and 31).

5.8.4 DC/DC Converter

Introduction
- The best way to find a failure in the DC/DC converters is to check their starting-up sequence at power "on" via the Mains/AC Power cord, presuming that the Stand-by Processor is operational.
- If the input voltage of the DC/DC converters is around 12 V (measured on the decoupling capacitors 2U17/2U25/ 2U45) and the ENABLE signals are "low" (active), then the output voltages should have their normal values.
- First, the Stand-by Processor activates the +1V2 supply (via ENABLE-1V2).
- Then, after this voltage becomes present and is detected OK (about 100 ms), the other two voltages (+2V5 and +3V3) will be activated (via ENABLE-3V3).
- The current consumption of controller IC 7U00 is around 20 mA (that means around 200 mV drop voltage across resistor 3U22).
- The current capability of DC/DC converters is quite high (short-circuit current is 7 to 10 A), therefore if there is a linear integrated stabilizer that, for example delivers 1.8V from +3V3 with its output overloaded, the +3V3 stays usually at its normal value even though the consumption from +3V3 increases significantly.
- The +2V5 supply voltage is obtained via a linear stabilizer made with discrete components that can deliver a lot of current. Therefore, in case +2V5 (or +2V5D) is short-circuited to GND, the +3V3 will not have the normal value but much less. The +2V5D voltage is available in stand-by mode via a low power linear stabilizer that can deliver up to 30 mA. In normal operation mode, the value of this supply voltage will be close to +2V5 (20 - 30 mV difference).
- The supply voltages +5V and +8V6 are available on connector 1M46; they are not protected by fuses. +12VSW is protected for over-currents by fuse 1U04.

Fault Finding
- **Symptom:** +1V2, +2V5, and +3V3 not present (even for a short while ~10ms).
  1. Check 12V availability (fuse 1U01, resistor 3U22, power MOS-FETs) and enable signal ENABLE-1V2 (active low).
  2. Check the voltage on pin 9 (1.5 V).
  3. Check for +1V2 output voltage short-circuit to GND that can generate pulsed over-currents 7-10 A through coil 5U03.
  4. Check the over-current detection circuit (2U12 or 3U97 interrupted).

- **Symptom:** +1V2 present for about 100 ms. Supplies +2V5 and +3V3 not rising.
  1. Check the ENABLE-3V3 signal (active "low").
  2. Check the voltage on pin 8 (1.5 V).
  3. Check the under-voltage detection circuit (the voltage on collector of transistor 7U10-1 should be less than 0.8 V).
  4. Check for output voltages short-circuits to GND (+3V3, +2V5 and +2V5D) that generate pulsed over-currents of 7-10 A through coil 5U00.
  5. Check the over-current detection circuit (2U18 or 3U83 interrupted).

- **Symptom:** +1V2 OK, but +2V5 and +3V3 present for about 100 ms. **Cause:** The SUPPLY-FAULT line stays "low" even though the +3V3 and +1V2 is available. The Stand-by Processor is detecting that and switches all supply voltages "off".
  1. Check the value of +2V5 and the drop voltage across resistor 3U22 (they could be too high)
  2. Check if the +1V2 or +3V3 are higher than their normal values. This can be due to defective DC feedback of the respective DC/DC converter (3U18 or 3UA7).

- **Symptom:** +1V2, +2V5, and +3V3 look okay, except the ripple voltage is increased (audible noise can come from the filtering coils 5U00 or 5U03).
  Cause: Instability of the frequency and/or duty cycle of one or both DC/DC converters.
  - Check resistor 3U06, the decoupling capacitors, the AC feedback circuits (2U20 + 2U21 + 3U14 + 3U15 for +1V2 or 2U19 + 2U85 + 3U12 + 3U13 for +3V3), the compensation capacitors 2U09, 2U10, 2U23 and 2U73, and IC 7U00.

Note 1: If fuse 1U01 is broken, this usually means a pair of defective power MOSFETs (7U01 or 7U03). Item 7U00 should be replaced as well in this case.

Note 2: The 12V switch and 8V6 switch (see "DC/DC CONNECTIONS" schematic) are not present on board: they are bypassed by jumpers.

5.9 Software Upgrading

5.9.1 Introduction

The set software and security keys are stored in a NAND-Flash, which is connected to the VIPER via the PCI bus.

It is possible **for the user** to upgrade the **main** software via the USB port. This allows replacement of a software image in a stand alone set, without the need of an E-JTAG debugger. A description on how to upgrade the main software can be found in chapter 3 "Directions For Use".

Important: When the NAND-Flash must be replaced, a new SSB must be ordered, due to the presence of the security keys!!! See table "SSB service kits" for the order codes.
Perform the following actions after SSB replacement:
1. Set the correct option codes (see sticker inside the TV).
2. Update the TV software (see chapter 3 for instructions).
3. Perform the alignments as described in chapter 8.
4. Check in CSM menu 5 if the HDMI keys are valid.

Table 5-4 SSB service kits

Model Number	New SSB order code
32PF9830/10	3104 328 41231
37PF9830/10	3104 328 41241
42PF9830/10	3104 328 41251

5.9.2 Main Software Upgrade

The software image resides in the NAND-Flash, and is formatted in the following way:

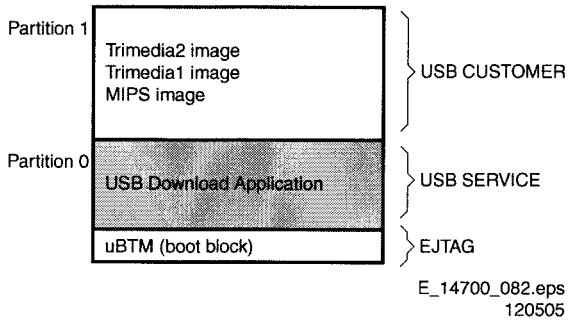

Figure 5-12 NAND-Flash format

Executables are stored as files in a file system. The boot loader (uBTM) will load the USB Download Application in partition 0 (USB drivers, boot script, etc.). This application makes it then possible to upgrade the main software via USB.

Installing "Partition 0" software is possible via an external EJTAG tool, but also in a special way with the USB stick (see description in paragraph "Partition 0").

Partition 1 (Customer)
To do a main software upgrade (partition 1) via USB, the set must be operational, and the "Partition 0" files for the VIPER **must** be installed in the NAND-Flash!

The new software can be uploaded to the TV by using a portable memory device or USB storage compliant devices (e.g. USB memory stick). You can download the new software from the Philips website to your PC.

Partition 0 (Service)
If the "Partition 0" software is corrupted, the software needs to be re-installed.
To upgrade this "USB download application" (partition 0 except the boot block), insert an USB stick with the correct software, but press the "red" button on the remote control (in "TV" mode) when it is asked via the on screen text.

Caution:
- The USB download application will now erase **both** partitions (except the boot block), so you need to reload the main SW after upgrading the USB download application. As long as this is not done, the USB download application will start when the set is switched "on".
- When something goes wrong during the progress of this method (e.g. voltage dip or corrupted software file), the set will not start up, and can only be recovered via the EJTAG tool!

5.9.3 Manual Start of the Main Software Upgrade Application

Normally, the software upgrading procedure will start automatically, when a memory device with the correct software is inserted, but in case this does not work, it is possible to force the TV into the software upgrade application. To do so:
- Disconnect the TV from the Mains/AC Power.
- Press the "OK" button on a Philips DVD RC-6 remote control (it is also possible to use the TV remote in "DVD" mode).
- Keep the "OK" button pressed while connecting the TV to the Mains/AC Power.
- The software upgrade application will start.
- When a memory device with upgrade software is connected, the upgrade process will start.

5.9.4 Stand-by Software Upgrade

It will be possible to upgrade the Stand-by software via a PC and the ComPair interface. Check paragraph "ComPair" on how to connect the interface. To upgrade the Stand-by software, use the following steps:
1. Disconnect the TV from the Mains/AC Power.
2. Short circuit the SPI pins [2] on the SSB. They are located outside the shielding (see figure "Service mode pads").
3. Keep the SPI pins shorted while connecting the TV to the Mains/AC Power.
4. Release the short circuit after approx. two seconds.
5. Start up HyperTerminal (can be found in every Windows application via Programs -> Accessories -> Communications -> HyperTerminal. Use the following settings:
   - COM1
   - Bits per second = 19200
   - Data bits = 8
   - Parity = none
   - Stop bits = 1
   - Flow control = Xon / Xoff.
6. Press "Shift U" on your PC keyboard. You should now see the following info:
   - PNX2015 Loader V1.0
   - 19-09-2003
   - DEVID=0x05
   - Erasing
   - MCSUM=0x0000
   - =
7. If you do not see the above info, restart the above procedure, and check your HyperTerminal settings and the connections between PC and TV.
8. Via "Transfer" -> "Send text file ...", you can send the proper upgrade file to the TV. This file will be distributed via the Service Organization.
9. After successful programming, you must see the following info:
   - DCSUM=0xECB3
   - :Ok
   - MCSUM=0xECB3
   - Programming
   - PCSUM=0xECB3
   - Finished
10. If you do not see this info, restart the complete procedure.
11. Close HyperTerminal.
12. Disconnect and connect Mains/AC Power again.

Personal Notes:

E_06532_012.eps
131004

6. Block Diagrams, Testpoint Overview, and Waveforms

Wiring Diagram (32") LCD SHARP

WIRING 32"

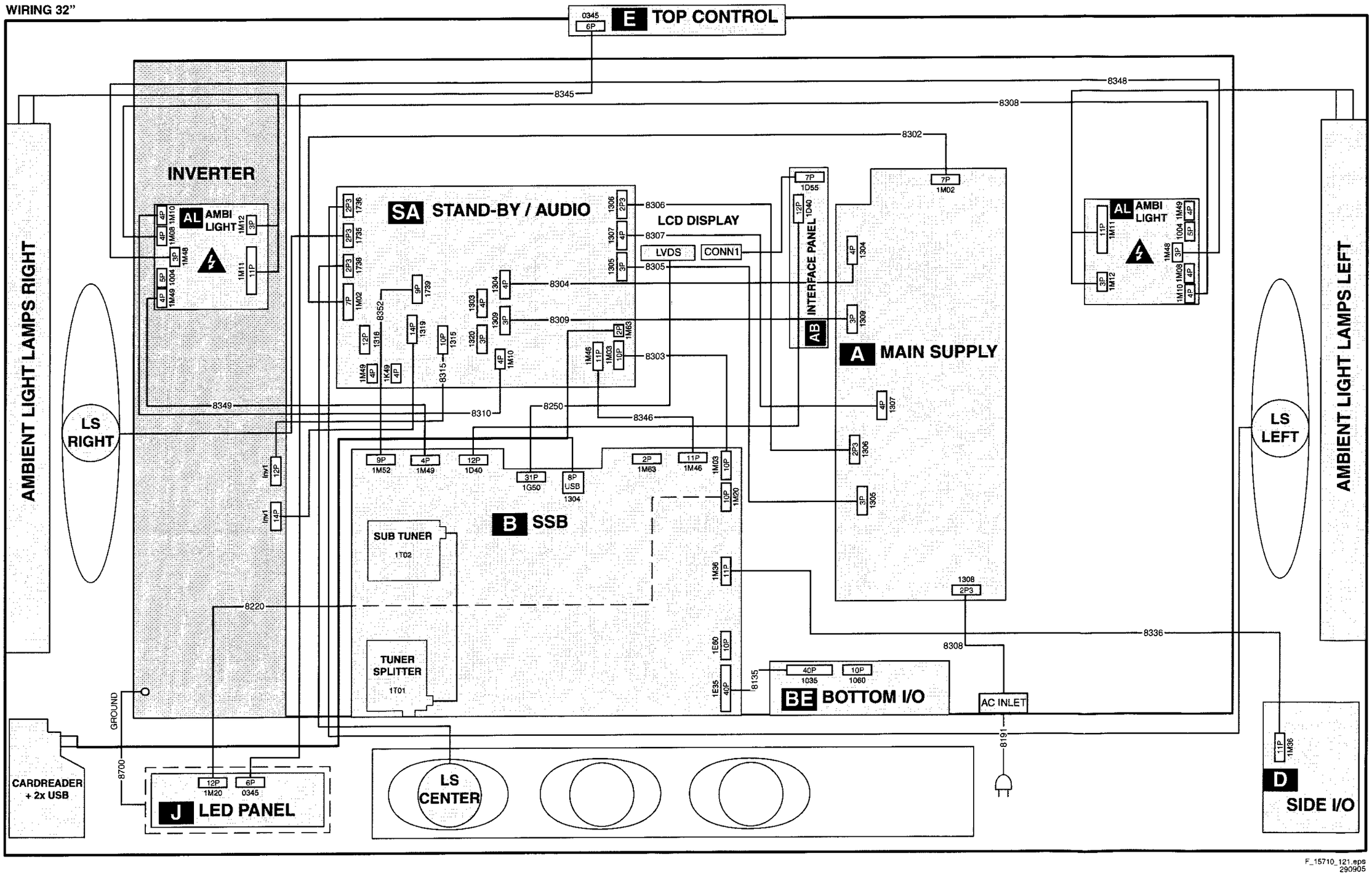

F_15710_121.eps
290905

Wiring Diagram (37") LCD LPL

WIRING 37"

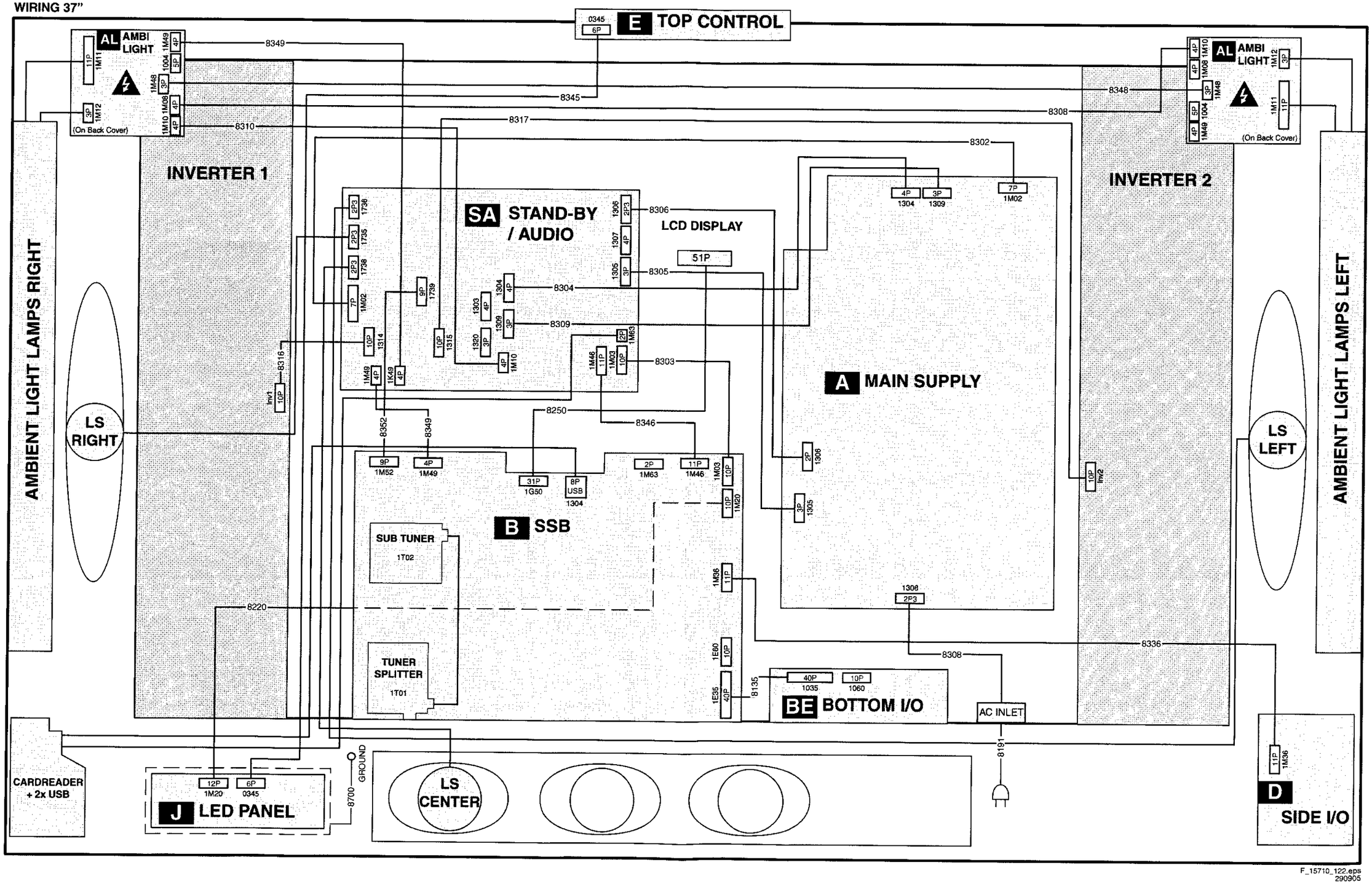

F_15710_122.eps
290905

Wiring Diagram (42") LCD LPL

WIRING 42"

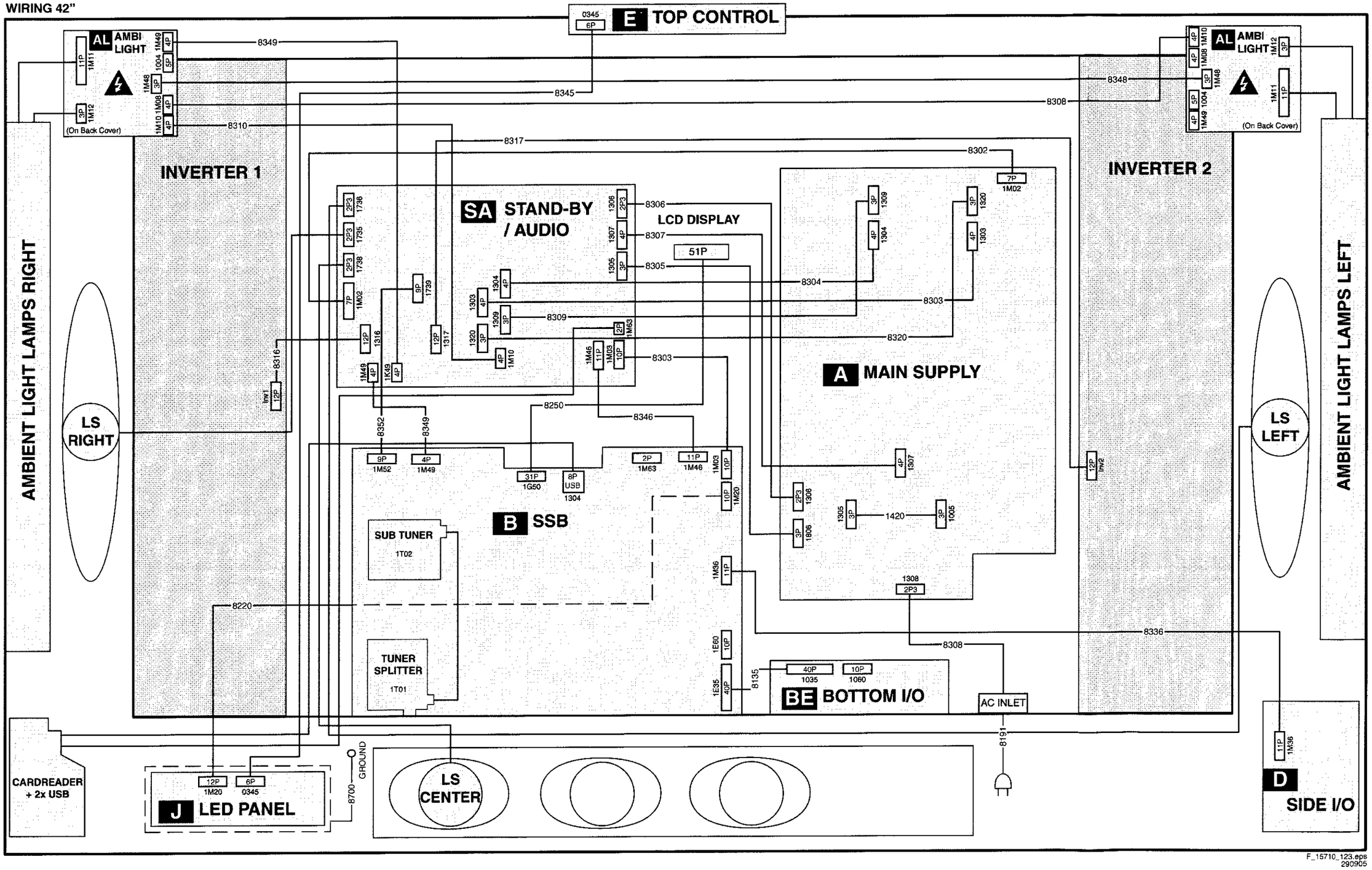

Block Diagram Supply + Standby (32")

SUPPLY 32"

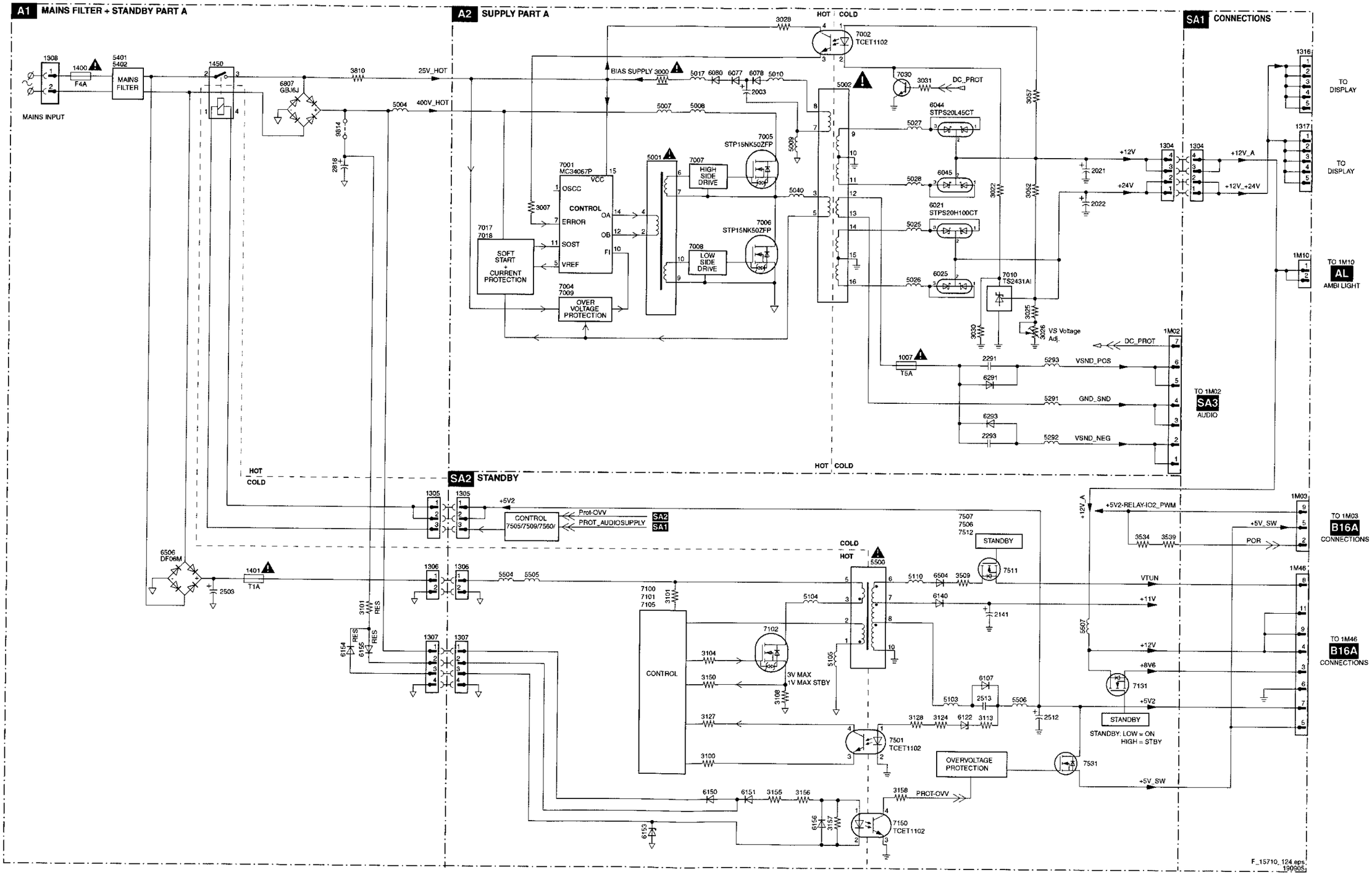

Block Diagram Supply + Standby (37")

SUPPLY 37"

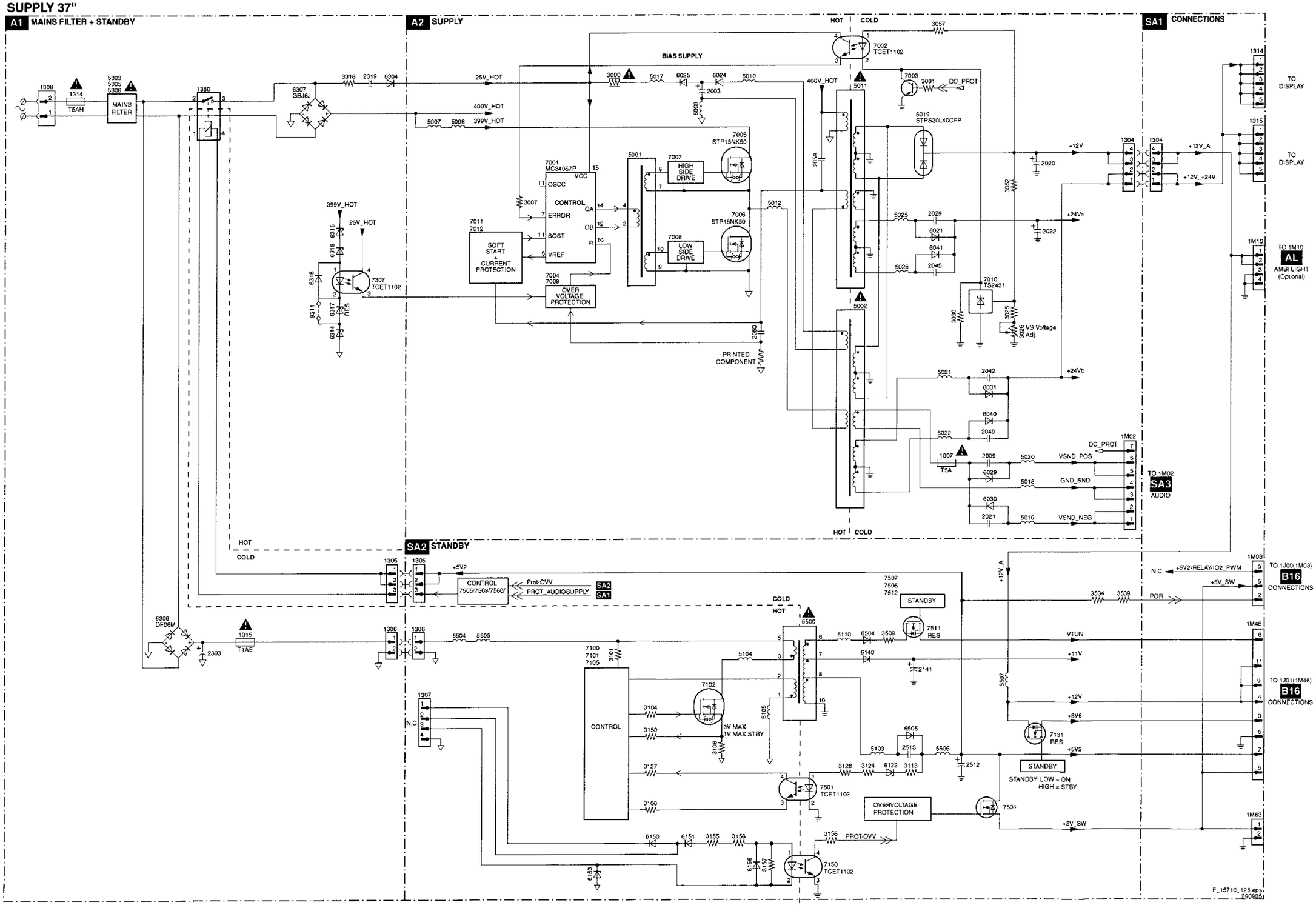

Block Diagram Supply + Standby (42")

SUPPLY 42"

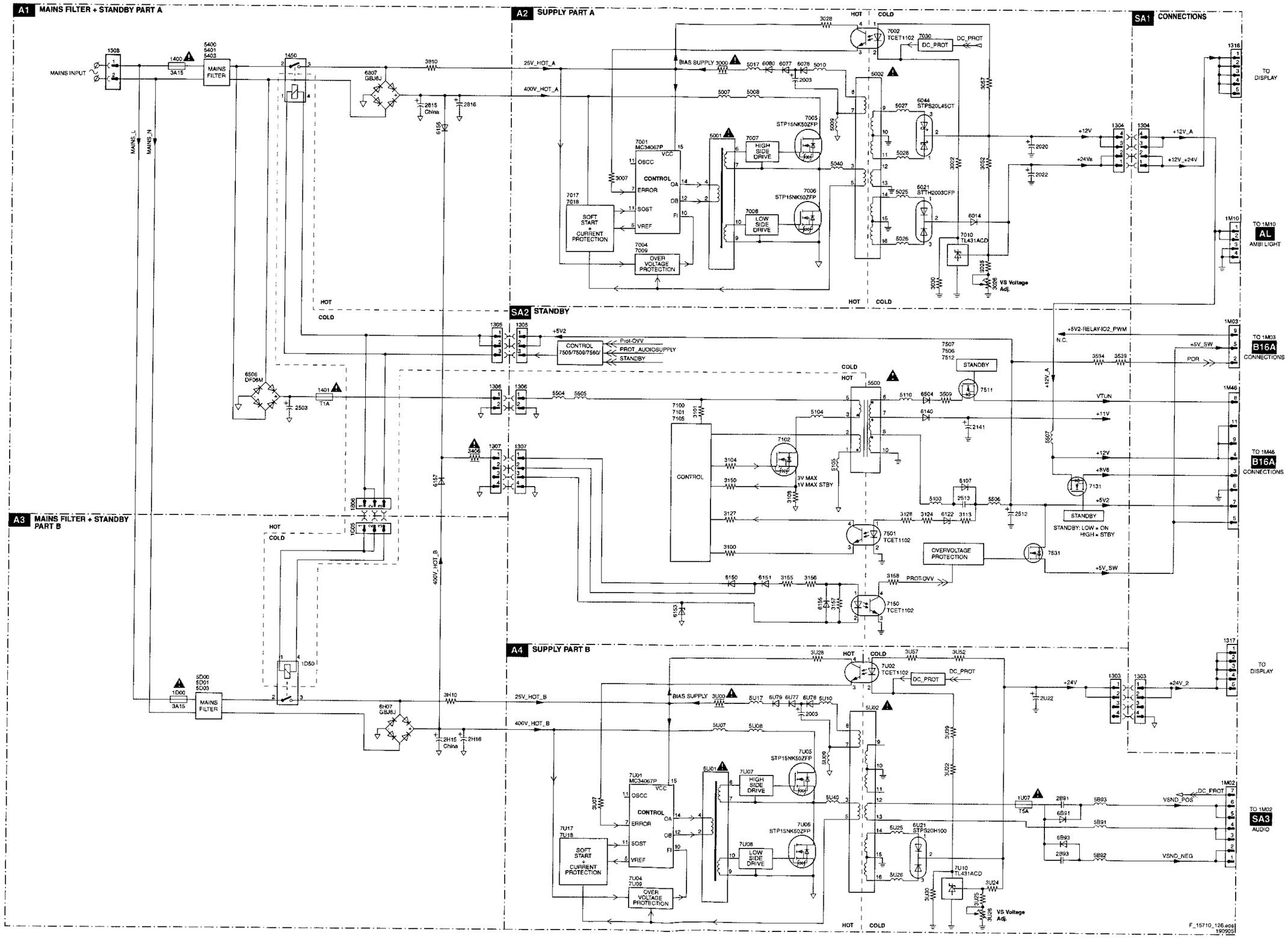

Block Diagram Video

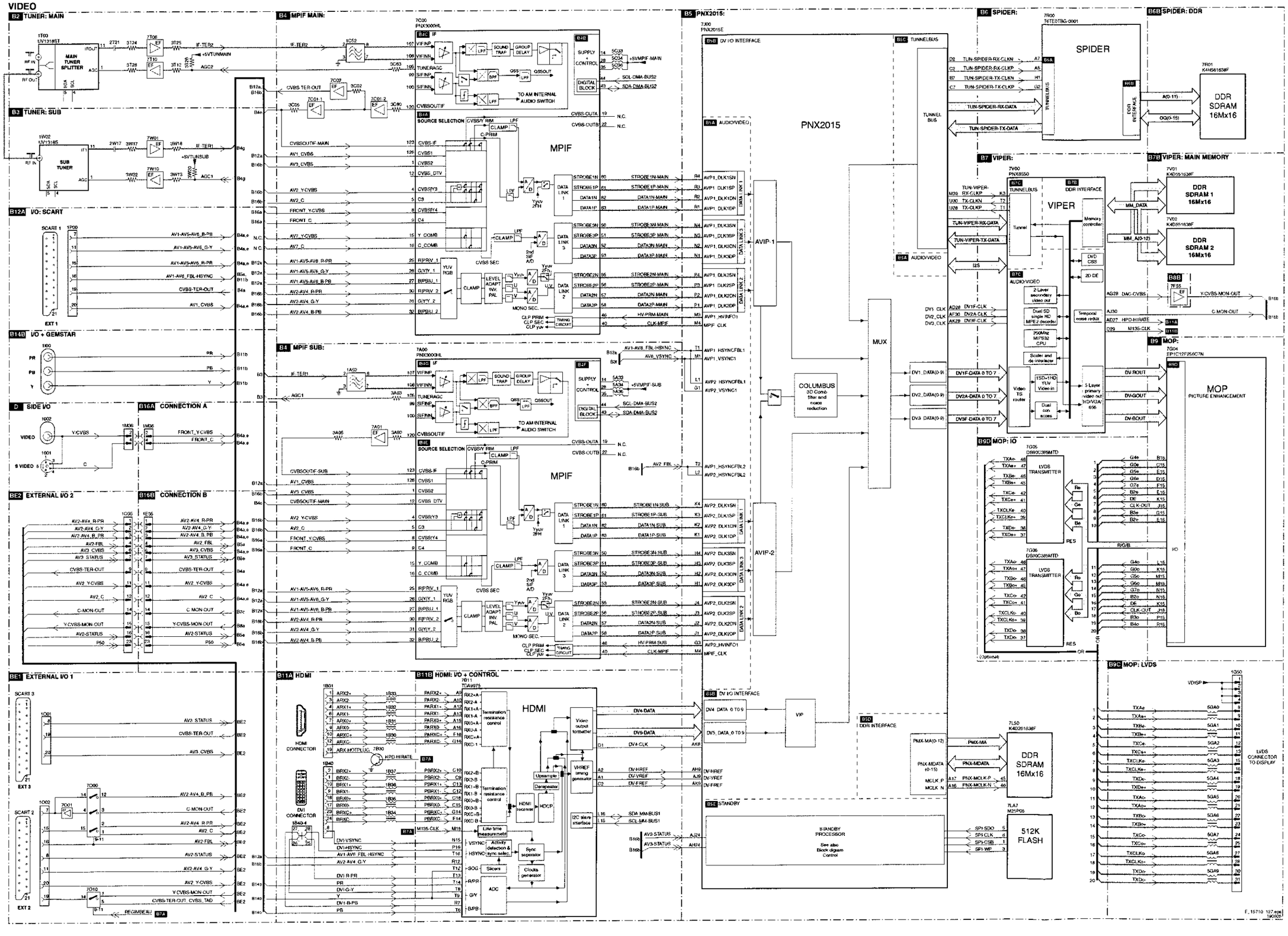

Block Diagram Audio

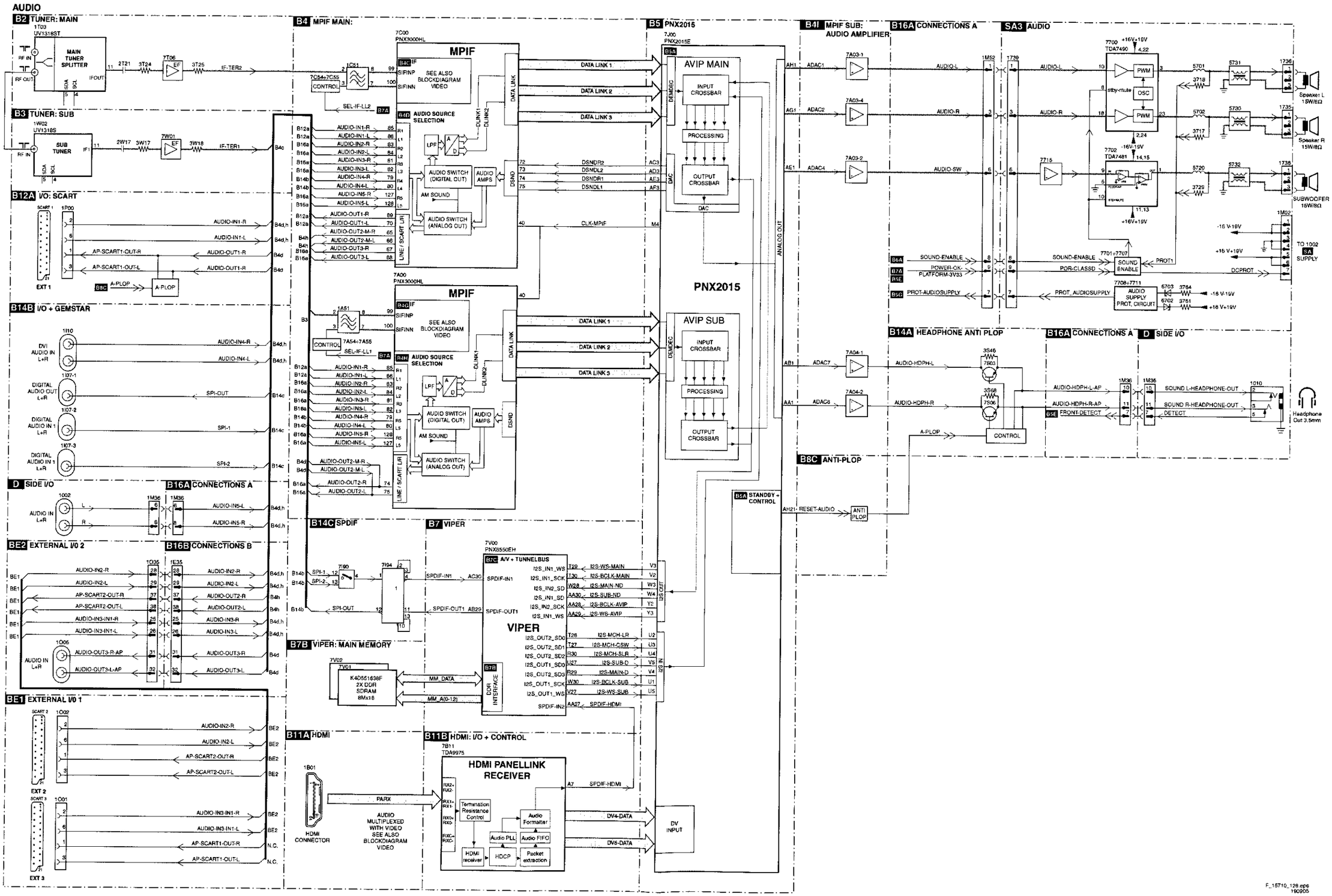

F_15710_128.eps
160905

Block Diagram Control + Clock Signals

CONTROL + CLOCK SIGNALS

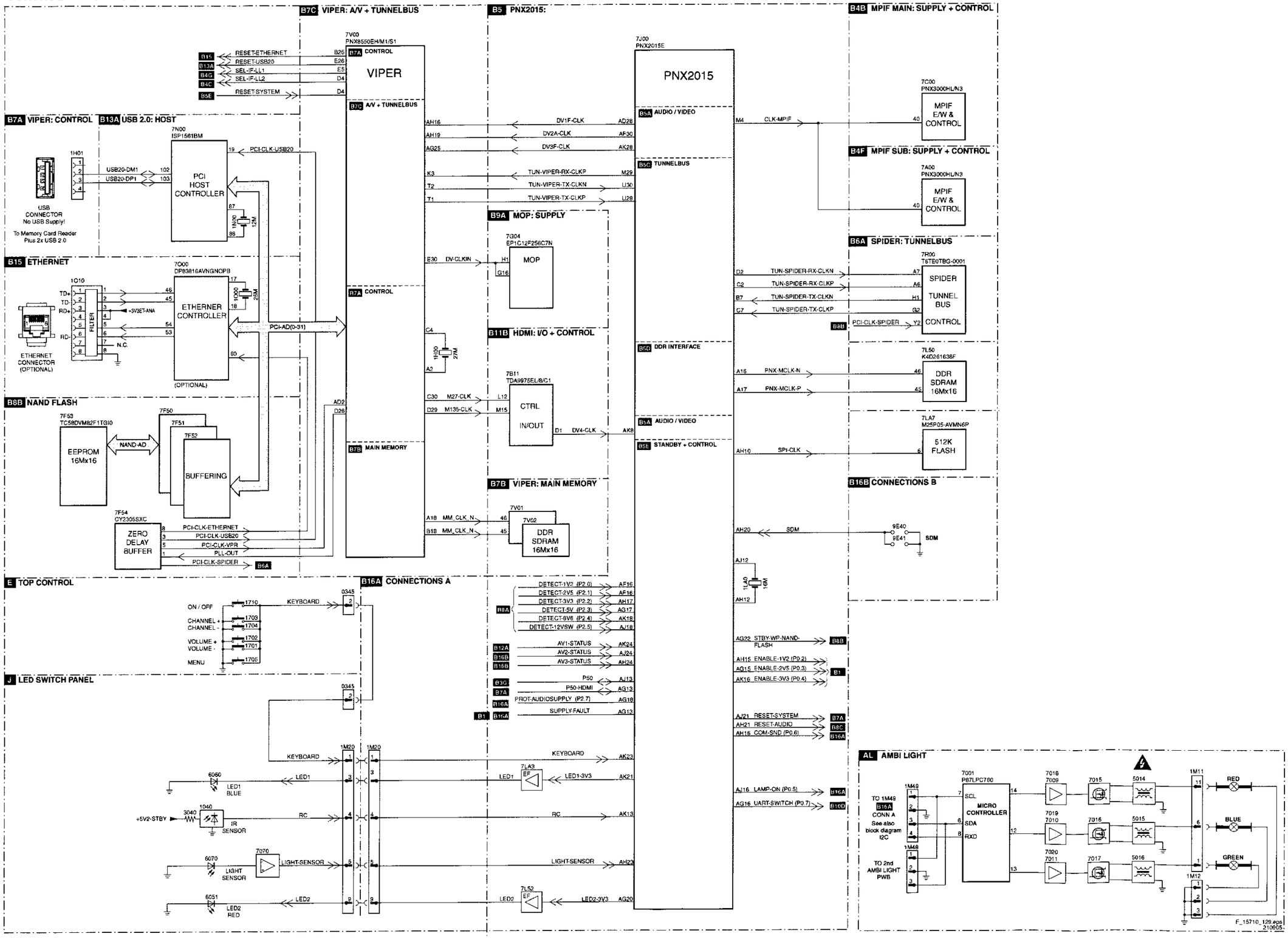

I²C overview

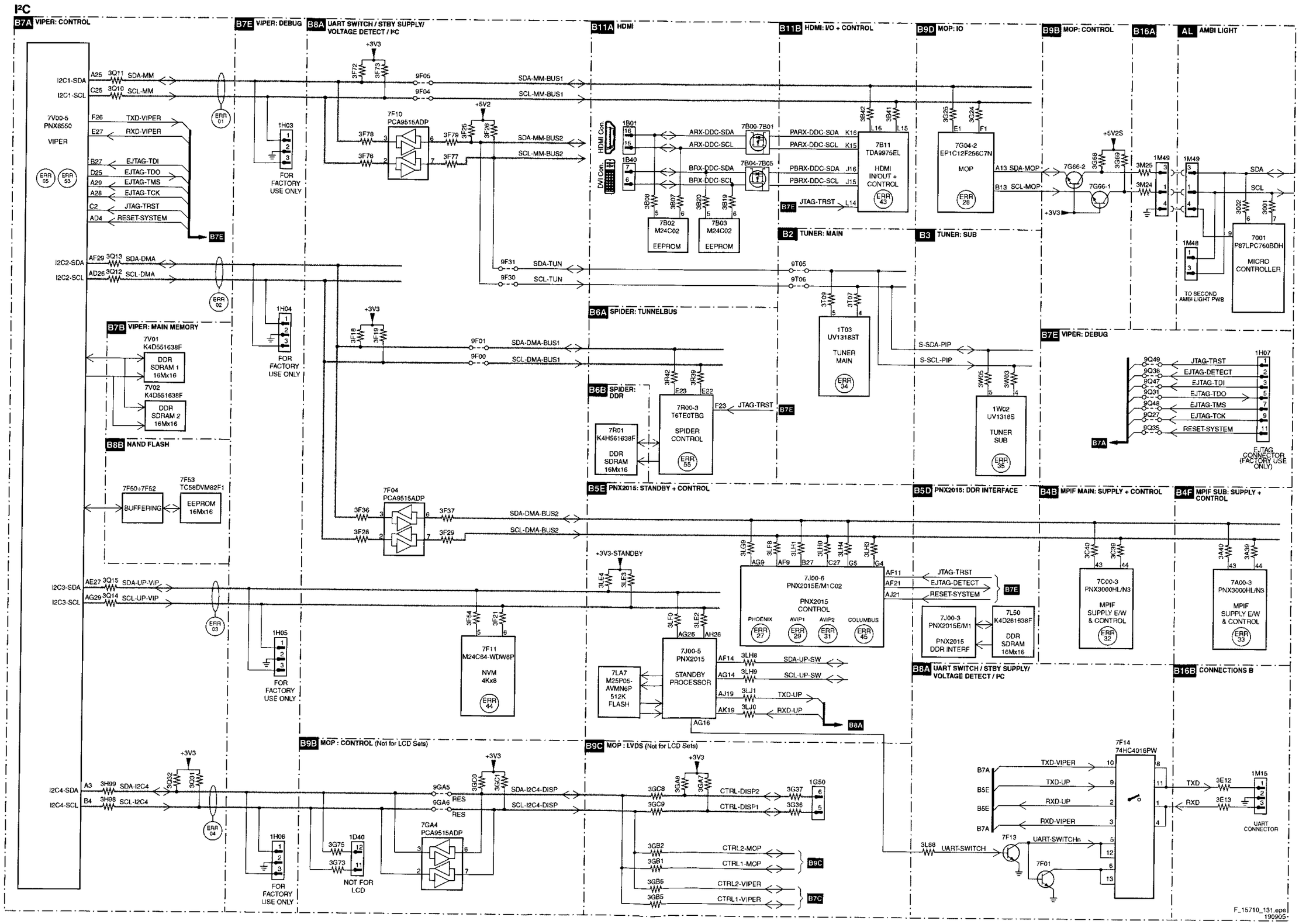

Supply Lines Overview

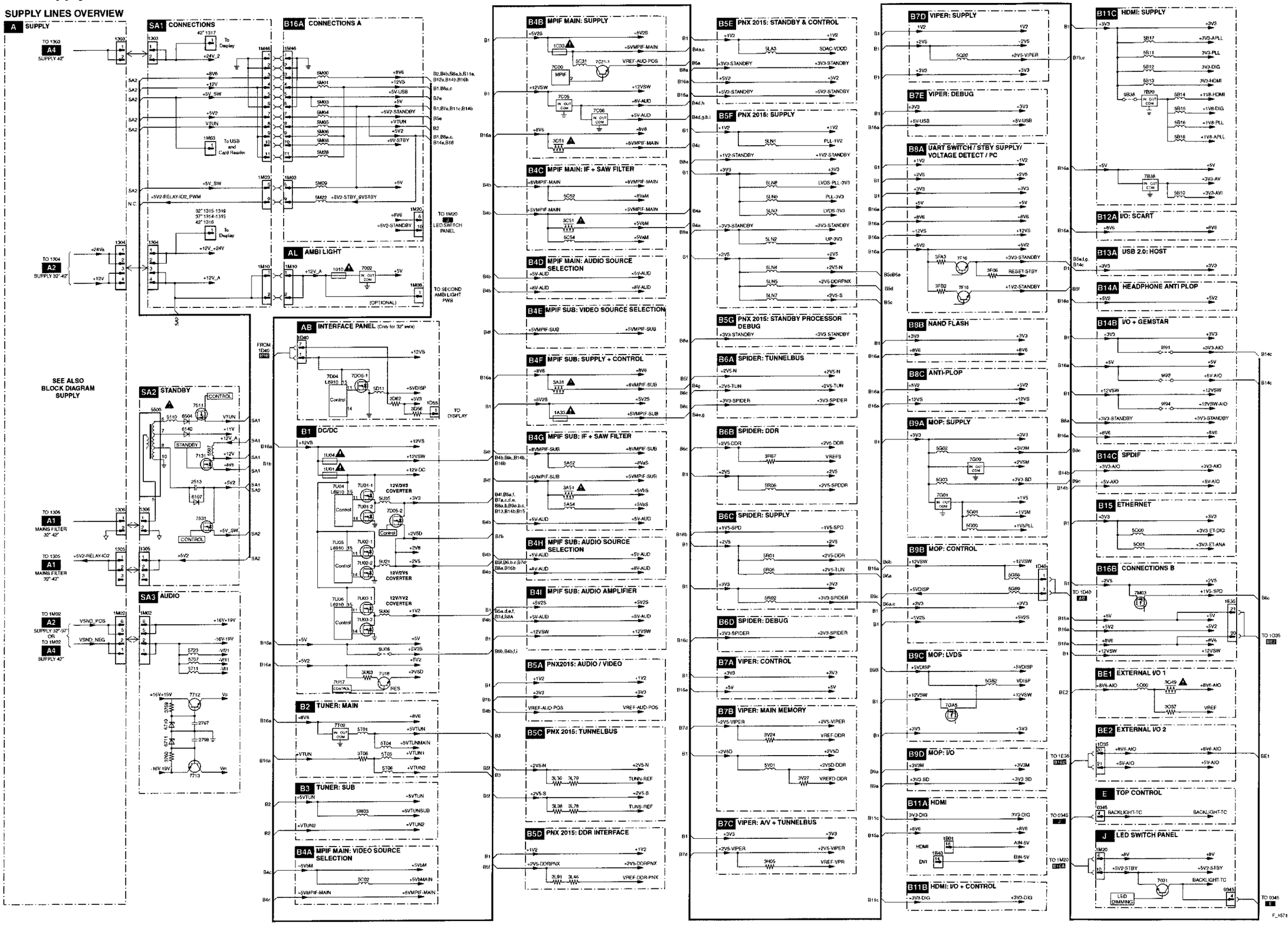

7. Circuit Diagrams and PWB Layouts

LCD Supply (32"): Mains Filter + Standby

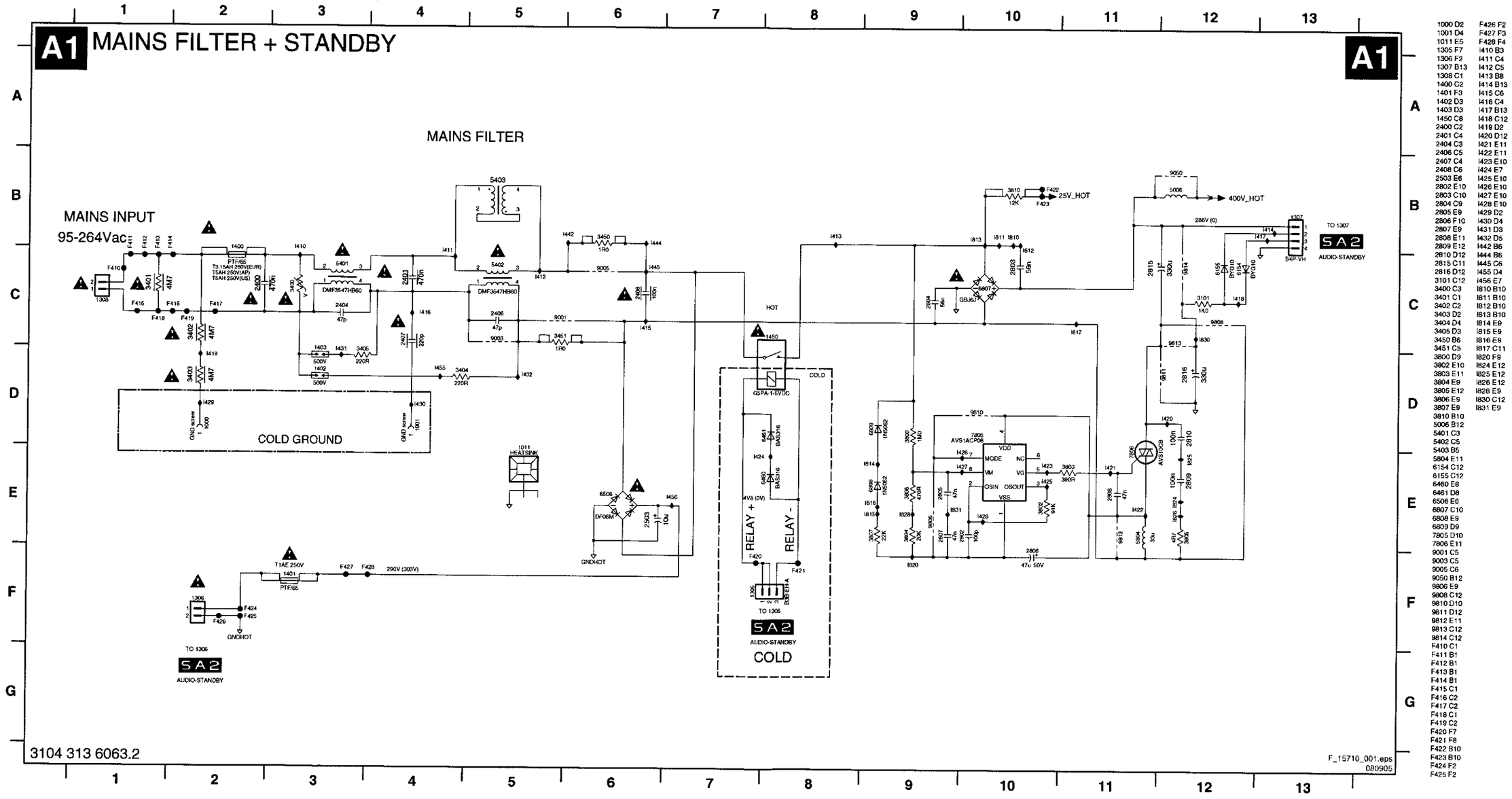

1000 D2 F426 F2
1001 D4 F427 F3
1011 E5 F428 F4
1305 F7 I410 B3
1306 F2 I411 C4
1307 B13 I412 C5
1308 C1 I413 B8
1400 C2 I414 B13
1401 F3 I415 C6
1402 D3 I416 C4
1403 D3 I417 B13
1450 C8 I418 C12
2400 C2 I419 D2
2401 C4 I420 D12
2404 C3 I421 E11
2406 C5 I422 E11
2407 C4 I423 E10
2408 C6 I424 E7
2503 E6 I425 E10
2802 E10 I426 E10
2803 C10 I427 E10
2804 C9 I428 E10
2805 E9 I429 D2
2806 F10 I430 D4
2807 E9 I431 D3
2808 E11 I432 D5
2809 E12 I442 B6
2810 D12 I444 B6
2815 C11 I445 C6
2816 D12 I455 D4
3101 C12 I456 E7
3400 C3 I810 B10
3401 C1 I811 B10
3402 C2 I812 B10
3403 D2 I813 B10
3404 D4 I814 E9
3405 D3 I815 E9
3450 B6 I816 E9
3451 C5 I817 C11
3800 D9 I820 F9
3802 E10 I824 E12
3803 E11 I825 E12
3804 E9 I826 E12
3805 E12 I828 E9
3806 E9 I830 C12
3807 E9 I831 E9
3810 B10
5006 B12
5401 C3
5402 C5
5403 B5
5804 E11
6154 C12
6155 C12
6460 E8
6461 D8
6506 E6
6807 C10
6808 E9
6809 D9
7805 D10
7806 E11
9001 C5
9003 C5
9005 C6
9050 B12
9806 E9
9808 C12
9810 D10
9811 D12
9812 E11
9813 C12
9814 C12
F410 C1
F411 B1
F412 B1
F413 B1
F414 B1
F415 C1
F416 C2
F417 C2
F418 C1
F419 C2
F420 F7
F421 F8
F422 B10
F423 B10
F424 F2
F425 F2

LCD Supply (32"): Supply

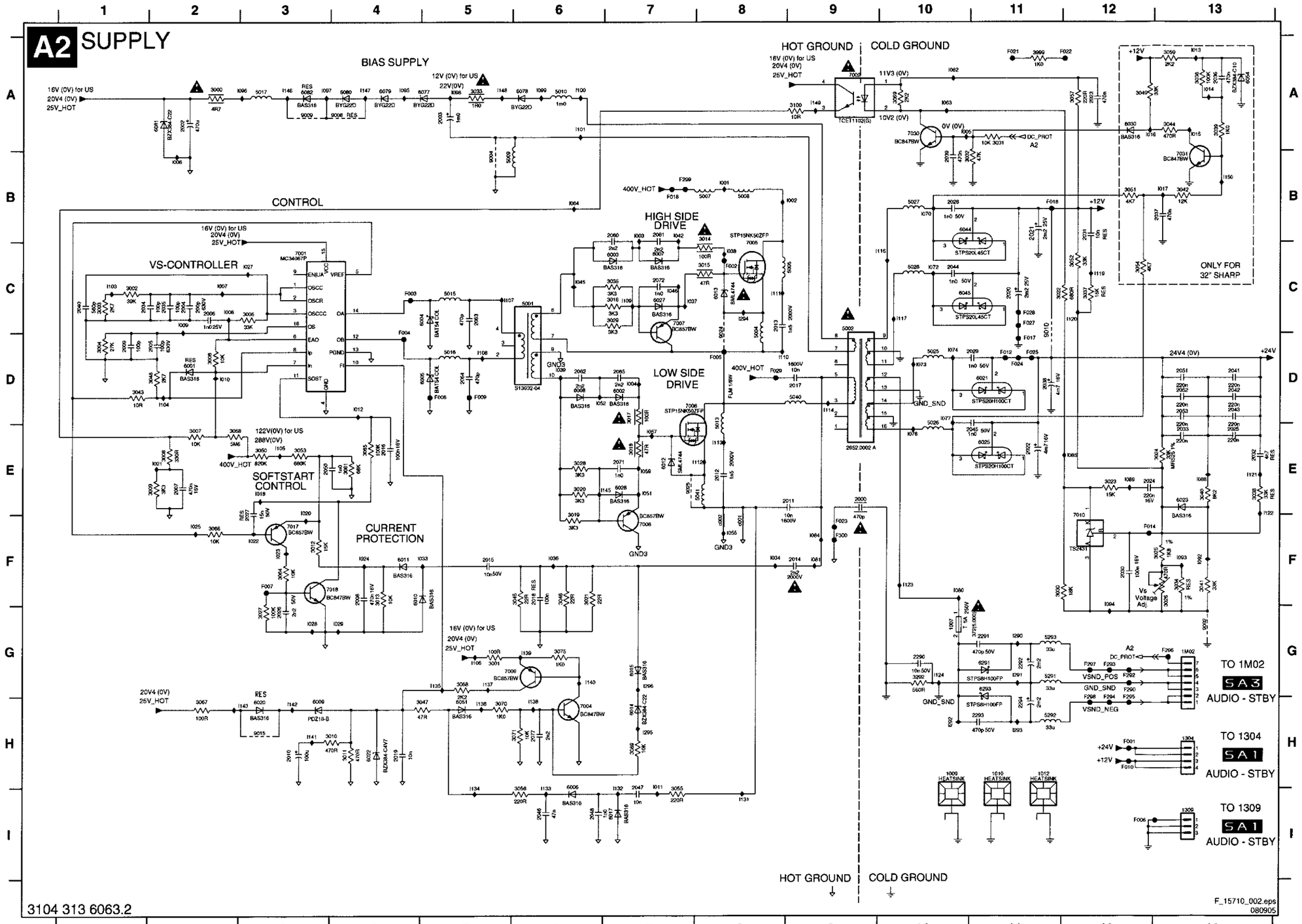

3104 313 6063.2

1007 G10	3044 A13	F010 H12	I138 H6	
1009 H10	3045 F6	F012 D11	I139 G6	
1010 H11	3046 F6	F014 F12	I140 G6	
1012 H11	3047 H5	F016 B11	I141 H3	
1304 H13	3048 D2	F017 D11	I142 H3	
1309 I13	3049 A12	F018 B7	I143 H3	
1M02 G13	3050 E3	F021 A11	I145 E7	
2000 E9	3051 B12	F022 A12	I146 A3	
2002 A2	3052 C12	F023 F9	I147 A4	
2003 A5	3053 E3	F024 D11	I148 A5	
2004 C2	3054 C12	F025 D11	I149 A9	
2006 D2	3055 I7	F027 C11	I150 B13	
2006 C2	3056 I6	F028 C11	I290 G11	
2007 E2	3057 A12	F029 D8	I291 G11	
2008 F4	3058 E2	F290 G12	I292 H10	
2009 D1	3059 A13	F292 G12	I293 H11	
2010 H3	3061 E4	F293 G12	I294 C8	
2011 E9	3064 F3	F294 H12	I295 H7	
2012 E8	3065 E4	F295 H12	I296 G7	
2013 C8	3066 F2	F296 G13	c001 F8	
2014 F9	3067 H2	F297 G12	c002 F8	
2015 F5	3068 G5	F298 H12		
2016 E4	3069 A10	F299 B7		
2017 D9	3070 H5	F300 F9		
2018 F6	3071 H6	I001 B8		
2019 H4	3075 G6	I002 B9		
2020 C11	3089 H7	I003 B6		
2021 B11	3100 A9	I004 D7		
2022 E11	3292 G10	I005 A10		
2023 A12	3999 A11	I006 B2		
2024 E12	5001 C6	I007 C2		
2025 E13	5002 C9	I008 C2		
2026 G3	5004 C8	I009 C2		
2027 E3	5005 C9	I010 D2		
2028 B10	5007 B8	I011 H7		
2029 D11	5008 B8	I012 D4		
2030 F12	5009 B5	I013 A13		
2031 B12	5010 A6	I014 A13		
2032 E13	5013 D8	I015 A13		
2033 E13	5015 C5	I016 A12		
2034 C1	5016 D5	I017 B13		
2035 C2	5017 A3	I018 E3		
2036 A13	5025 D10	I020 E3		
2037 B13	5026 E10	I021 E2		
2038 D11	5027 B10	I022 F3		
2039 B10	5028 C10	I023 F3		
2040 C1	5040 D9	I024 F4		
2041 D13	5041 E8	I025 F2		
2042 D13	5291 G11	I027 C3		
2043 D13	5292 H11	I028 G3		
2044 C10	5293 G11	I029 G4		
2045 E11	6001 D2	I033 F5		
2048 I6	6002 D7	I034 F8		
2047 I7	6003 C6	I036 F6		
2048 I6	6004 C5	I037 C7		
2050 E3	6005 D5	I038 B8		
2051 D13	6006 I6	I039 D6		
2052 D13	6007 C7	I042 B7		
2053 D13	6008 D6	I045 C6		
2060 C8	6009 H3	I046 C7		
2061 B7	6010 F4	I051 E7		
2062 D6	6011 F4	I052 D6		
2063 C5	6012 E7	I055 F8		
2064 D5	6013 C8	I057 E7		
2065 D7	6014 H7	I059 E7		
2071 E7	6015 G7	I062 A10		
2072 C7	6017 I7	I063 A10		
2077 H6	6020 H3	I064 B6		
2290 G10	6021 D11	I070 B10		
2291 G11	6022 H4	I072 C10		
2292 G11	6023 E13	I073 D10		
2293 H11	6025 E11	I074 D10		
2294 H11	6027 C7	I076 E10		
3000 A2	6028 E7	I077 D10		
3001 G5	6030 A12	I080 F10		
3002 C1	6044 B10	I081 F9		
3003 C1	6045 C10	I084 F9		
3004 D1	6051 H5	I085 E12		
3005 C3	6054 A13	I088 E13		
3006 D2	6077 A5	I089 E12		
3007 E2	6078 A6	I092 F13		
3008 E2	6079 A4	I093 F13		
3009 E2	6080 A4	I094 F12		
3010 H4	6081 A2	I095 A4		
3011 H4	6082 A3	I096 A3		
3012 F3	6291 G11	I097 A3		
3013 F4	6293 G11	I098 A5		
3014 B7	7001 C3	I099 A6		
3015 C7	7002 A9	I100 A6		
3016 C7	7004 H6	I101 A5		
3017 D7	7005 C8	I103 C1		
3018 E7	7006 D7	I104 D2		
3019 F6	7007 C7	I105 E3		
3020 E6	7008 F7	I106 G5		
3021 F6	7009 G6	I107 C5		
3022 C11	7010 E12	I108 D5		
3023 E12	7017 F3	I109 C7		
3024 E13	7018 F3	I110 D8		
3025 F13	7030 A10	I111 C8		
3026 G13	7031 B13	I112 E8		
3027 G3	9002 G13	I113 E8		
3028 E6	9004 B5	I114 D9		
3029 C7	9008 A4	I116 C10		
3030 F11	9009 A3	I117 C10		
3031 A11	9010 C11	I119 C12		
3032 B10	9015 H3	I120 C12		
3033 A5	9024 C8	I121 E13		
3034 F13	9025 E7	I122 E13		
3035 C7	F001 H12	I123 F10		
3036 A13	F002 C8	I124 G10		
3037 C12	F003 C4	I131 I8		
3038 E13	F004 D4	I132 I7		
3039 A13	F005 D8	I133 I6		
3040 E13	F006 I12	I134 I5		
3041 F13	F007 F3	I135 G5		
3042 B13	F008 D5	I136 H5		
3043 D1	F009 D5	I137 G5		

Layout LCD Supply (32") (Top Side)

1000 A1	1304 A10	1401 A4	2003 A6	2014 A7	2294 C10	2503 A4	2816 A6	3033 A6	3403 A1	3807 B4	5007 B6	5017 A5	5291 B10	6021 B9	6807 C3	7805 B4	9007 A8	9017 A5	9024 C6	9033 A9	9040 B9	9047 C10	9090 A10	9812 C4
1001 A3	1305 A3	1402 A2	2004 A6	2017 B6	2400 C2	2803 B3	3000 A5	3050 A5	3404 A2	3810 A4	5008 C5	5025 B9	5292 C10	6025 B10	6808 A4	7806 C4	9010 A10	9018 A6	9025 B7	9034 A10	9041 B9	9050 A5	9091 A9	9813 B5
1007 B10	1306 A4	1403 B1	2005 A6	2020 C8	2401 B1	2804 B4	3014 B6	3053 A5	3405 B1	5001 B6	5009 B7	5026 A9	5293 B10	6044 C10	6809 A4	9001 A3	9011 A8	9019 A6	9026 C8	9035 B8	9042 B10	9080 A7	9092 A7	9814 A5
1009 B9	1307 A5	1450 A3	2010 A7	2021 C8	2404 B1	2806 B4	3015 C5	3058 A5	3450 A2	5002 A7	5010 B6	5027 C9	5401 B2	6045 C10	7001 A6	9003 A3	9012 C8	9020 B7	9027 B9	9036 B9	9043 B10	9081 C2	9093 A7	
1010 C9	1308 C1	1M02 B10	2011 B7	2022 A8	2406 A3	2809 C4	3017 C7	3400 C2	3451 A2	5004 C6	5013 C7	5028 C9	5402 A1	6291 A9	7002 A7	9004 A7	9013 B8	9021 A6	9028 B9	9037 B8	9044 C9	9086 B10	9098 B3	
1011 C3	1309 A8	2000 A7	2012 C7	2038 A9	2407 A3	2810 C4	3018 C7	3401 C2	3800 A4	5005 C6	5015 A6	5040 B6	5403 A2	6293 A10	7005 C6	9005 B3	9014 B1	9022 C3	9031 A9	9038 A9	9045 C9	9087 B9	9808 B5	
1012 A9	1400 C1	2002 A7	2013 C6	2292 A10	2408 B3	2815 A3	3026 A9	3402 A1	3805 C4	5006 A4	5016 A6	5041 C7	5804 B4	6506 A4	7006 C7	9006 C10	9016 A7	9023 C3	9032 A9	9039 A9	9046 C9	9088 A10	9811 B5	

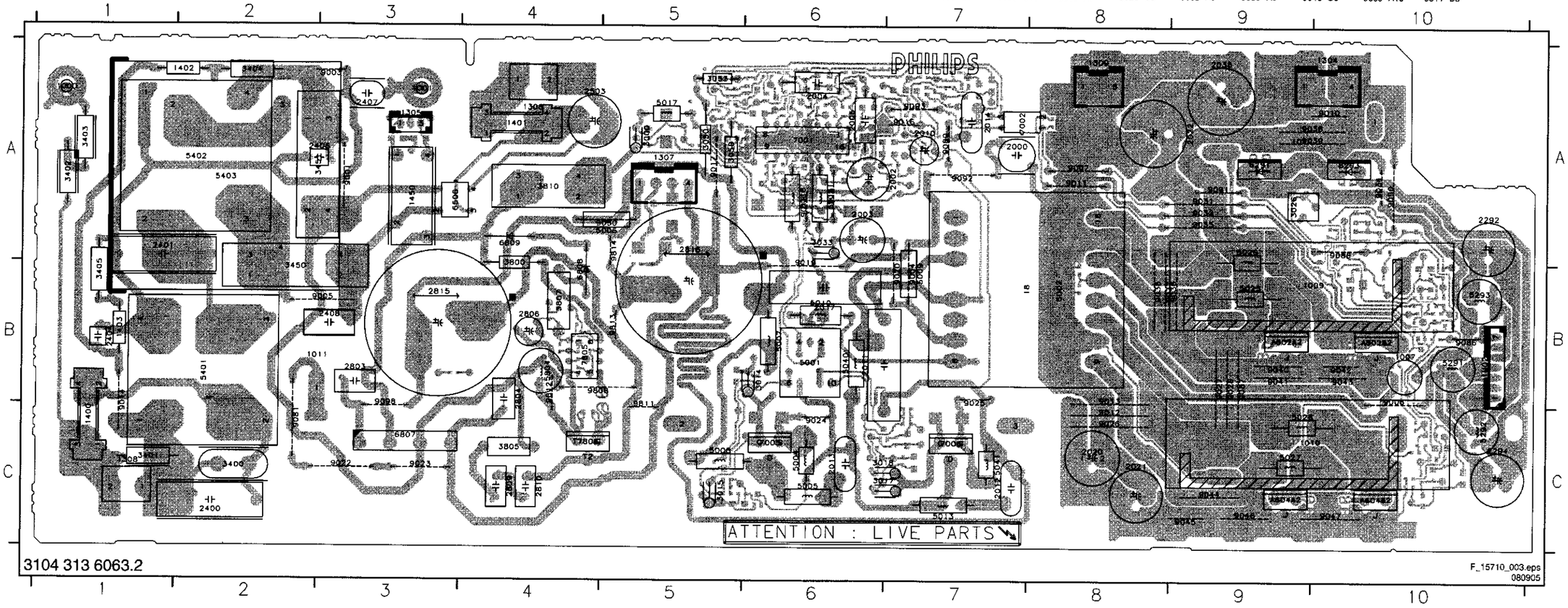

Layout LCD Supply (32") (Overview Bottom Side)

2006 A5	2019 A5	2029 B2	2036 C1	2044 C1	2052 A1	2065 C4	2802 B7	3004 A5	3011 A5	3022 B1	3030 B1	3038 B1	3045 A5	3054 C1	3065 A6	3075 A4	3804 B7	6005 A5	6012 B4	6023 A1	6078 B5	6460 A8	7017 A5	9015 A4
2007 A6	2023 B1	2030 B1	2037 C1	2045 B1	2053 A1	2071 C4	2805 B7	3005 A5	3012 A5	3023 B1	3031 B1	3039 C1	3046 A4	3055 A4	3066 A5	3089 A4	3806 B7	6006 A5	6013 C5	6027 C6	6079 A5	6461 A8	7018 A5	9030 A1
2008 A5	2024 B1	2031 A1	2039 B1	2046 A4	2060 C6	2072 C5	2807 B7	3006 A5	3013 A5	3024 A1	3032 B1	3040 B1	3047 A4	3056 A4	3067 A4	3100 A4	3999 B8	6007 B6	6014 A4	6028 C4	6080 A6	7004 A4	7030 B1	9085 B1
2009 A5	2025 A1	2032 A1	2040 A5	2047 A5	2061 B5	2077 A4	2808 C7	3007 A6	3016 C6	3025 B1	3034 B1	3041 B1	3048 A5	3057 A1	3068 A4	3101 B6	6001 A5	6008 C5	6015 A4	6030 C1	6081 A4	7007 C5	7031 C1	9806 B7
2015 A5	2026 A6	2033 A1	2041 A1	2048 A5	2062 C5	2290 B3	3001 A4	3008 A6	3019 C4	3027 A6	3035 C6	3042 C1	3049 C1	3059 C1	3069 A3	3292 B3	6002 C4	6009 A4	6017 A5	6051 A4	6082 A6	7008 C4	9002 B1	9810 B7
2016 A5	2027 A6	2034 A5	2042 A1	2050 A5	2063 A5	2291 A2	3002 A5	3009 A6	3020 C4	3028 C4	3036 C1	3043 A5	3051 C1	3061 A5	3070 A4	3802 B7	6003 C6	6010 A5	6020 A4	6054 C1	6154 A6	7009 A4	9008 A6	9820 B1
2018 A5	2028 C2	2035 A5	2043 A1	2051 A1	2064 A5	2293 A1	3003 A5	3010 A4	3021 A4	3029 C6	3037 A1	3044 C1	3052 A1	3064 A5	3071 A4	3803 B6	6004 A5	6011 A5	6022 A5	6077 A5	6155 B6	7010 B1	9009 A6	

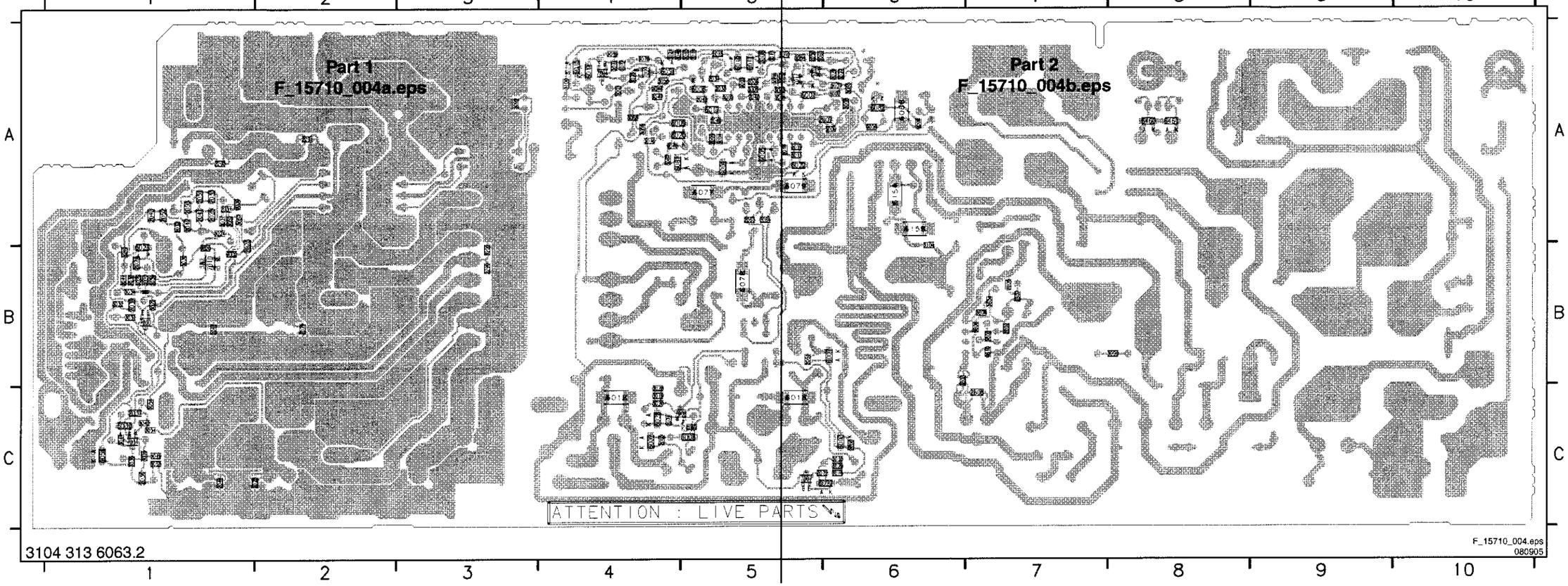

3104 313 6063.2

F_15710_004.eps
080905

Layout LCD Supply (32") (Part 1 Bottom Side)

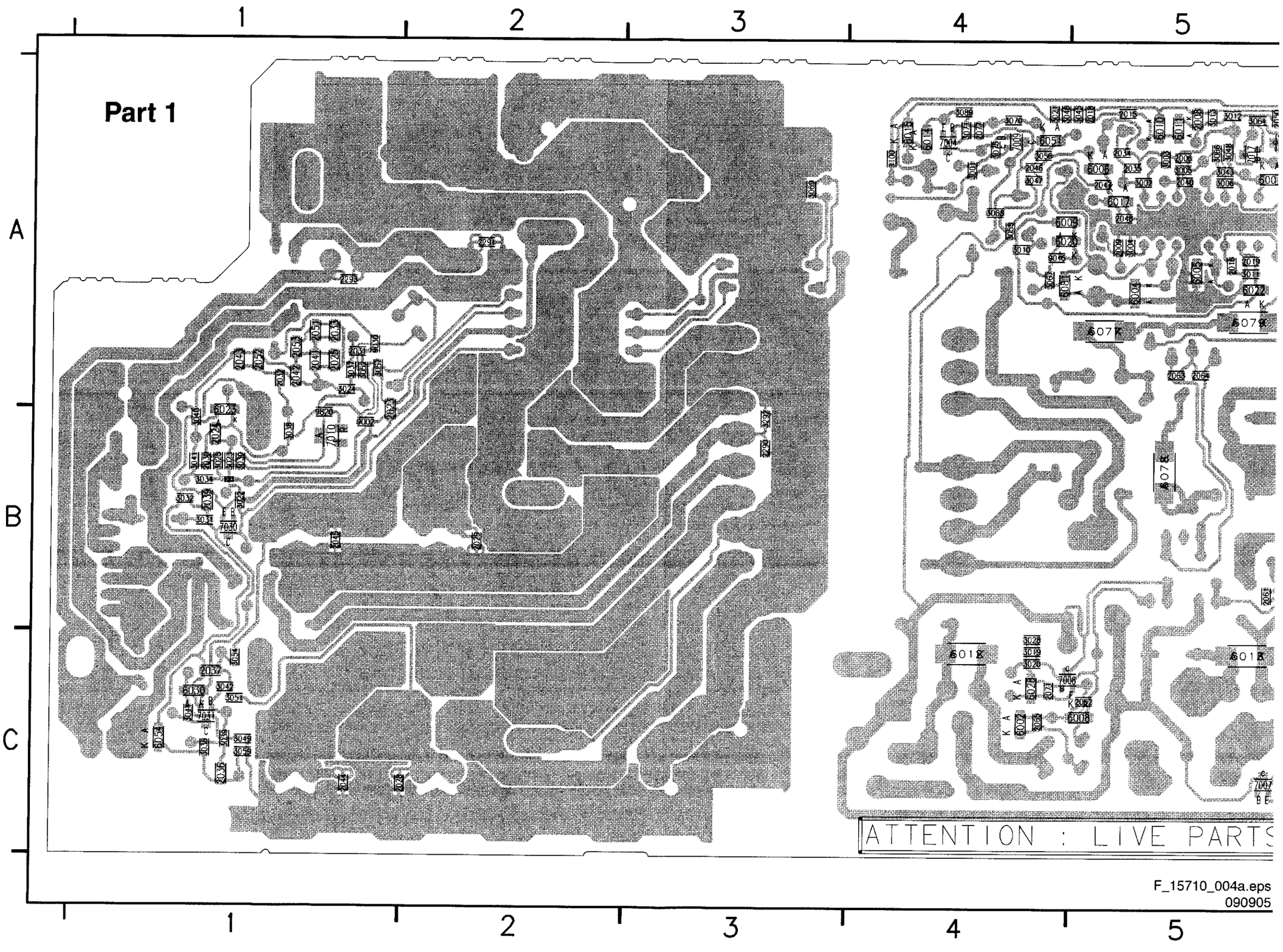

F_15710_004a.eps
090905

Layout LCD Supply (32") (Part 2 Bottom Side)

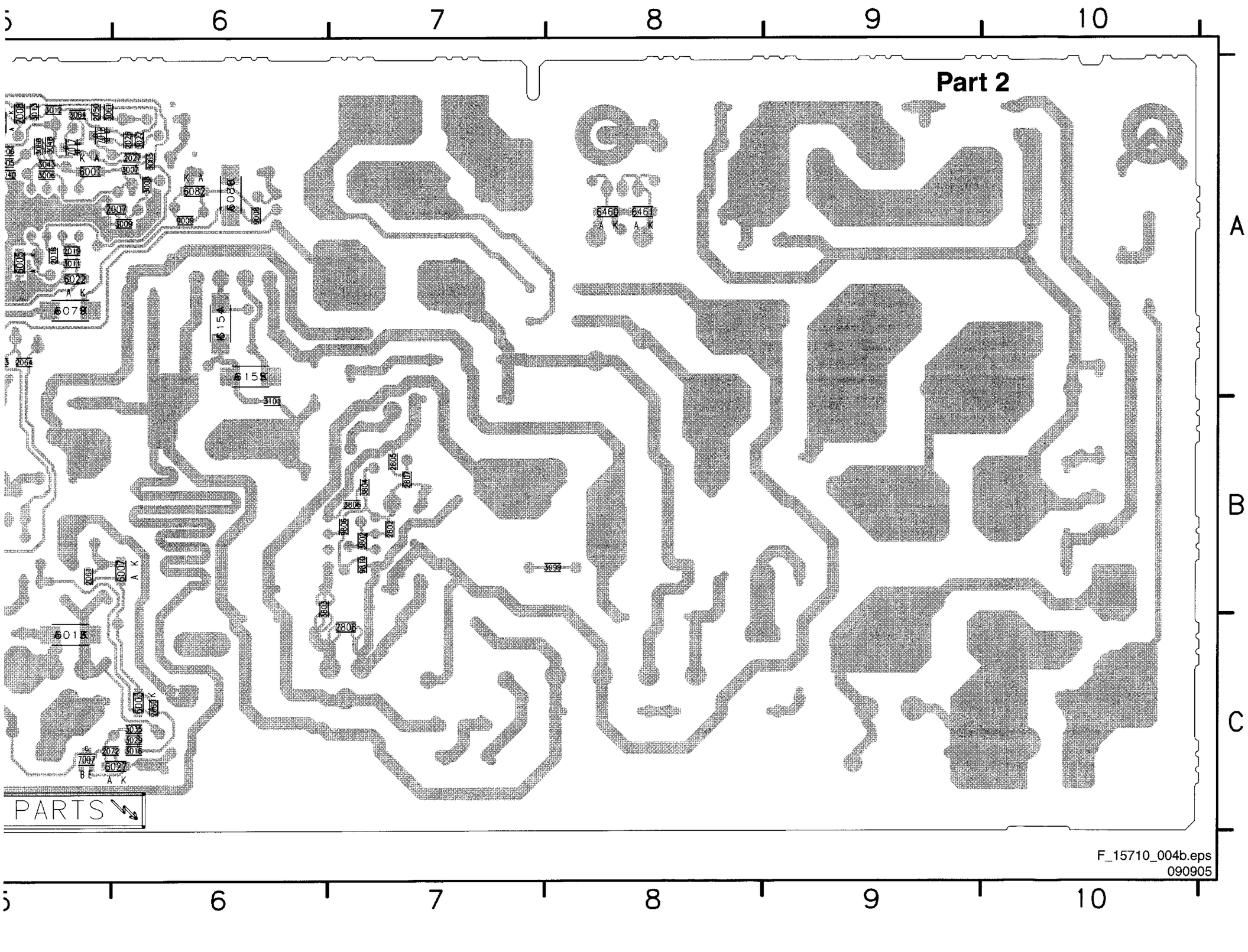

LCD Supply (37"): Mains Filter + Standby

1002 D1	1302 B4	1311 E6	2301 C4	2309 F13	2316 D12	2323 C3	2330 F10	3304 B5	3310 B13	3317 D6	3323 E12	5307 D3	6308 E10	6318 B13	7306 E13	9308 D12	9316 G3	F415 D2	F421 E8	I299 E5	I416 D4	I811 C11	I817 D11	I825 E13	I831 C13	I837 E13	I844 C4
1003 C4	1303 C4	1312 E7	2302 D5	2310 D11	2317 C12	2324 C4	2331 F10	3305 C4	3311 F11	3318 C10	3324 E12	5308 D12	6309 E10	6354 C14	7307 B14	9309 C5	F410 C1	F416 D2	F422 F9	I410 C3	I419 D2	I812 C11	I820 F10	I826 F13	I832 C13	I838 F13	I846 C4
1004 G9	1305 G9	1314 C2	2303 E8	2311 C11	2318 E5	2325 D6	3300 C3	3306 B14	3312 E12	3319 D6	5303 D6	6304 B10	6314 C14	6355 B13	9301 D14	9310 E11	F411 C2	F417 D2	F423 F9	I411 C5	I424 E9	I813 C11	I821 B4	I827 D7	I833 B14	I839 E11	I860 F10
1005 B4	1306 G2	1315 F3	2304 D11	2313 F11	2319 B10	2327 B10	3301 C2	3307 F10	3313 F10	3320 D7	5304 F13	6305 B11	6315 A12	6360 E9	9302 C12	9311 C14	F412 C2	F418 D2	F424 F2	I412 C5	I444 D8	I814 E10	I822 E12	I828 B13	I834 C14	I840 E11	I861 E10
1300 E4	1307 E2	1350 D9	2305 F11	2314 F13	2320 D12	2328 E1	3302 D2	3308 C14	3314 F13	3321 F10	5305 C4	6306 D8	6316 B13	6361 E9	9303 D5	9312 F13	F413 C2	F419 D2	F524 C14	I413 C10	I445 C8	I815 F10	I823 E12	I829 B14	I835 B10	I841 F11	I862 D12
1301 E4	1308 C1	2300 C3	2307 E4	2315 C12	2321 C13	2329 E2	3303 E2	3309 E10	3316 D6	3322 E12	5306 C5	6307 C11	6317 C13	7305 E11	9304 F10	9315 E3	F414 C2	F420 D8	I297 D5	I415 D8	I810 C11	I816 F10	I824 E12	I830 A13	I836 B10	I842 F10	I863 E2

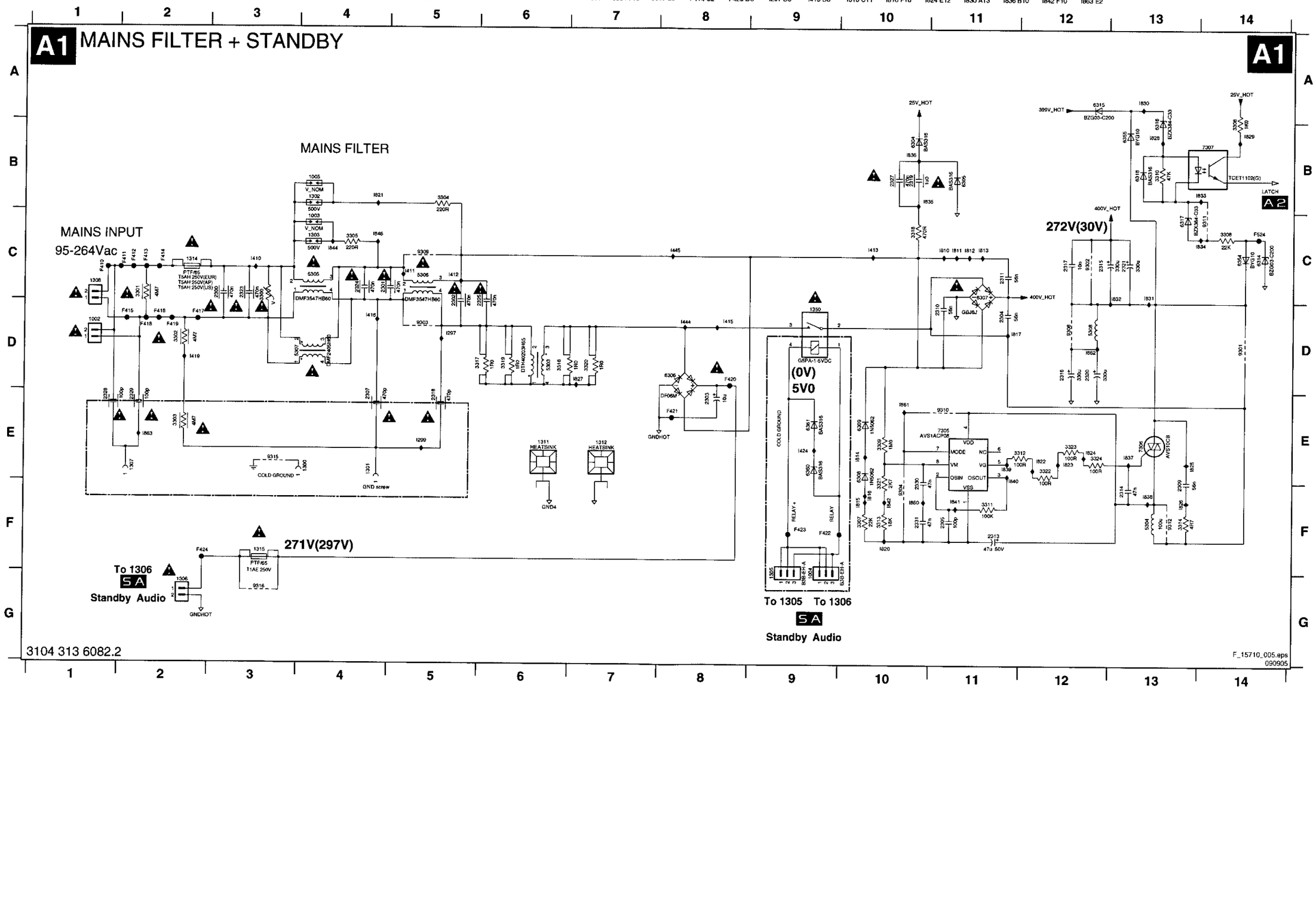

LCD Supply (37"): Supply

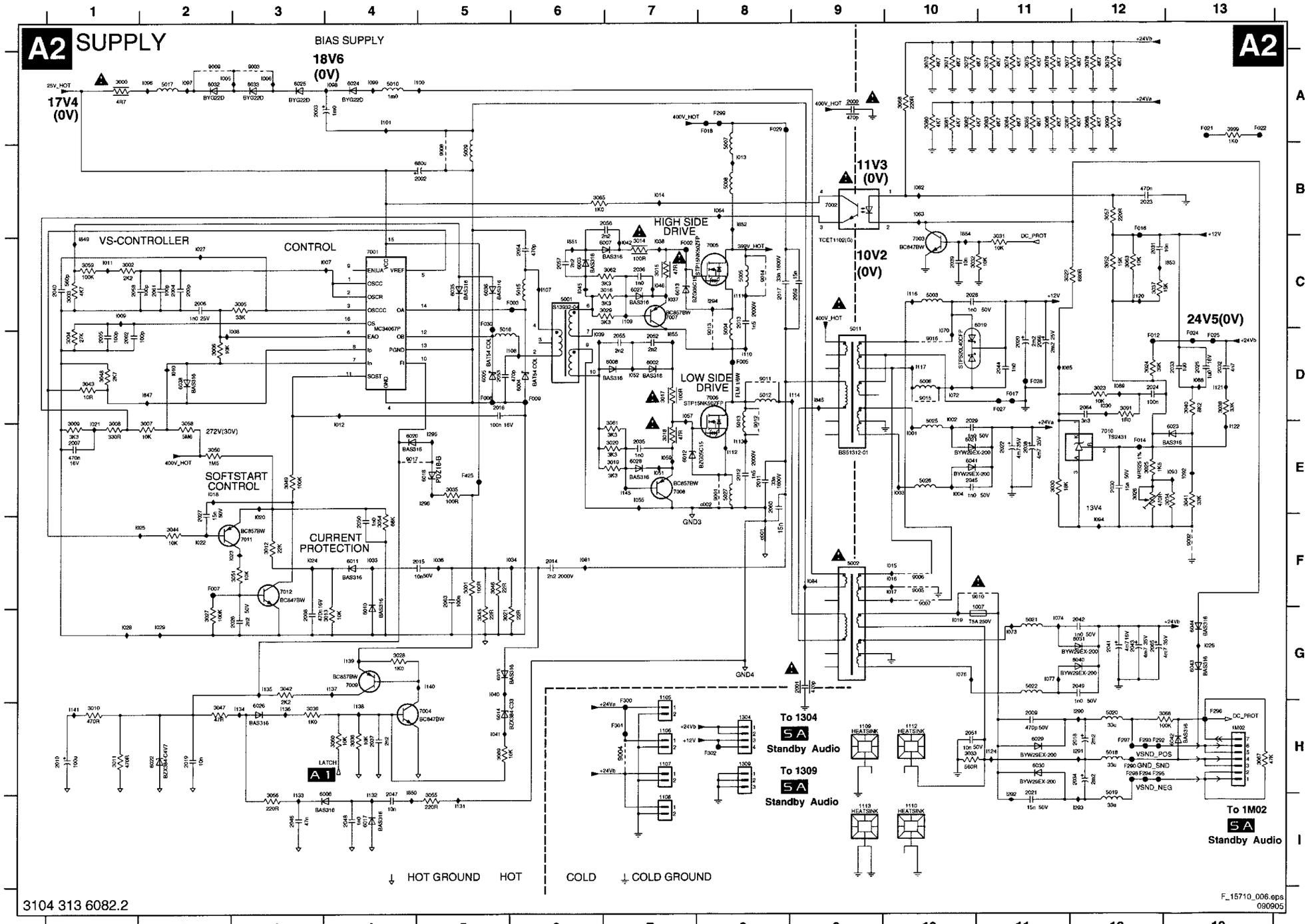

1007 G11	3035 E5	6042 H13	I072 D10
1105 G7	3036 H4	6043 G13	I073 G11
1106 H7	3037 C12	6044 G13	I074 G11
1107 H7	3038 D13	7001 C4	I076 G10
1108 I7	3039 H3	7002 B9	I077 G11
1109 H9	3040 D13	7003 C10	I081 F6
1110 I10	3041 E13	7004 H5	I084 F9
1112 H10	3042 G3	7005 C8	I085 D11
1113 I9	3043 D1	7006 D8	I088 D13
1304 H8	3044 F2	7007 C7	I089 D12
1309 H8	3045 G5	7008 E7	I092 E13
1M02 H13	3046 F5	7009 G4	I093 E13
2000 A9	3047 H2	7010 E12	I094 F12
2001 G9	3048 D1	7011 F3	I096 A2
2002 B6	3049 E3	7012 F3	I097 A2
2003 A3	3050 E2	9001 E8	I098 A4
2004 C2	3051 F3	9002 F13	I099 A4
2005 D1	3052 C12	9003 A9	I100 A5
2006 C2	3054 F4	9004 H7	I101 A4
2007 E1	3055 I5	9005 F10	I107 C6
2008 G3	3056 I3	9006 F10	I108 D6
2009 H11	3057 B12	9007 F10	I109 C7
2010 H1	3058 E2	9008 B5	I110 D8
2011 E8	3059 C1	9009 A2	I111 C8
2012 E8	3060 H4	9010 F11	I112 E8
2013 C8	3061 E7	9011 D8	I113 E8
2014 F6	3062 C7	9012 D8	I114 D9
2015 F5	3063 C12	9013 C8	I116 C10
2016 D5	3065 B6	9014 C8	I117 D10
2017 C8	3066 H13	9015 D10	I120 C12
2018 H12	3067 H13	9016 D10	I121 D13
2019 H2	3068 A10	9017 E4	I122 E13
2020 D11	3070 A10	F002 C7	I124 H11
2021 I11	3071 A10	F003 C6	I131 I5
2022 E11	3072 A10	F005 D8	I132 I4
2023 B12	3073 A11	F007 F2	I133 I3
2024 D12	3074 A11	F008 D5	I134 H3
2025 D13	3075 A11	F009 D8	I135 G3
2026 G3	3076 A11	F012 D12	I136 H3
2027 E2	3077 A11	F014 E12	I137 G4
2028 C10	3078 A12	F016 B12	I138 H4
2029 E10	3079 A12	F017 D11	I139 G4
2030 E12	3080 A10	F018 A8	I140 G5
2031 C12	3081 A10	F021 A13	I141 H1
2032 D13	3082 A10	F022 A13	I145 E7
2033 D13	3083 A11	F024 D13	I260 H12
2034 H12	3084 A11	F025 D13	I291 H12
2035 E7	3085 A11	F027 D11	I292 I11
2036 C7	3086 A11	F028 D11	I293 I12
2037 H4	3087 A11	F029 A8	I294 C8
2038 E11	3088 A12	F030 C5	I295 E5
2039 C10	3089 H5	F290 H12	I296 E5
2040 C1	3090 A12	F292 H12	I845 D9
2041 G12	3091 D12	F293 H12	I847 D2
2042 G12	3999 A13	F294 H12	I849 C1
2043 G12	5001 C6	F295 H12	I850 H4
2044 D11	5002 F9	F296 H13	I851 C6
2045 E10	5003 C10	F297 H12	I852 B8
2046 I3	5004 C8	F298 H12	I853 C13
2047 I4	5005 C8	F299 A8	I854 B10
2048 I4	5006 D10	F300 H7	I855 D7
2049 G12	5007 A8	F301 H7	c001 F8
2050 F4	5008 B8	F302 H8	c002 E8
2051 H10	5009 B5	F425 E5	
2052 D7	5010 A4	I001 E10	
2053 D5	5011 D9	I002 D10	
2054 C6	5012 D8	I003 E10	
2055 D7	5013 D8	I004 E10	
2056 B7	5015 C6	I005 A2	
2057 C6	5016 D5	I006 A3	
2058 C1	5017 A2	I007 C4	
2059 C9	5018 H12	I008 D3	
2060 E8	5019 I12	I009 C1	
2061 C2	5020 H12	I010 D2	
2062 D1	5021 G11	I011 C1	
2063 F5	5022 G11	I012 E4	
2064 D12	5025 E10	I013 B8	
2065 G12	5026 E10	I014 B7	
2066 D11	5027 E8	I015 F10	
3000 A1	6002 D7	I016 F10	
3001 F5	6003 C6	I017 F10	
3002 C1	6004 D6	I018 E2	
3003 C1	6005 D5	I019 G10	
3004 D1	6006 I4	I020 F3	
3005 C3	6007 C7	I021 E1	
3006 D2	6008 D7	I022 F2	
3007 E2	6010 G4	I023 F2	
3008 E1	6011 F4	I024 F3	
3009 E1	6012 E7	I025 F2	
3010 H1	6013 C7	I026 G13	
3011 H1	6014 H5	I027 C2	
3012 F3	6015 G5	I028 G1	
3013 G4	6017 I4	I029 G2	
3014 C7	6018 E5	I030 D12	
3015 C7	6019 C10	I033 F4	
3016 C7	6020 E4	I034 F6	
3017 D7	6021 E10	I036 F5	
3018 E7	6022 H2	I037 C7	
3019 E7	6023 E13	I038 C7	
3020 E7	6024 A4	I039 D6	
3021 G5	6025 A3	I040 G5	
3022 C11	6026 H3	I041 H5	
3023 D12	6027 C7	I042 C7	
3024 D12	6028 E7	I045 C6	
3025 E12	6029 H11	I046 C7	
3026 E12	6030 H11	I051 E7	
3027 G2	6031 G12	I052 D7	
3028 G4	6032 A2	I055 E7	
3029 C7	6033 A3	I057 D7	
3030 E11	6035 C5	I059 E7	
3031 C11	6036 C5	I062 B10	
3032 C10	6038 D2	I063 B10	
3033 H10	6040 G12	I064 B8	
3034 E13	6041 E10	I070 D10	

Layout LCD Supply (37") (Top Side)

1002 E1 1108 E10 1303 E3 1312 D3 2003 F7 2017 A5 2059 A5 2304 C3 2316 A3 2325 C2 3018 F5 3074 E9 3082 B10 3300 E2 3309 B5 5002 D8 5010 E7 5019 F10 5304 C5 6030 F9 7001 E5 9004 C10 9013 F5 9309 D2 9502 B5 9510 E7 9518 D9 9526 D3
1003 E3 1109 B8 1304 D10 1314 F2 2004 E5 2018 E10 2060 A5 2307 C1 2317 B3 2326 E4 3026 D9 3075 E9 3083 B10 3301 E2 3310 C5 5003 B8 5011 A7 5020 E10 5305 E2 6031 E9 7002 B7 9005 C8 9014 F4 9312 C5 9503 B5 9511 E5 9519 B6 9527 D3
1004 A5 1110 C8 1305 A5 1315 A6 2005 D4 2020 D10 2065 E10 2309 C4 2318 C1 3050 D6 3076 E9 3084 B10 3302 E1 3316 A1 5004 E5 5012 F5 5021 D8 5306 D1 6040 E9 7005 F4 9006 C8 9015 B8 9315 B7 9504 C4 9512 D6 9520 B6 9529 F1
1005 D2 1112 F8 1306 A5 1350 A5 2010 D6 2022 B9 2066 C10 2310 C4 2319 D4 3058 E6 3077 E9 3085 C9 3303 D1 3317 B1 5005 F4 5013 F6 5022 C8 5307 D3 6041 B9 7006 F5 9007 C8 9016 B8 9316 A5 9505 C4 9513 D5 9521 B6 9530 D9
1007 F8 1113 E8 1307 F1 1M02 F10 2011 A5 2034 F10 2300 E3 2311 D2 2320 B5 3070 D8 3078 D8 3086 C9 3304 D2 3318 D4 5006 B7 5015 D5 5025 A8 5308 B4 6306 B4 7305 B5 9008 D6 9301 B4 9320 D2 9506 D6 9514 E6 9522 C10
1105 B10 1300 C7 1308 E1 2000 B7 2012 F6 2038 B10 2301 E2 2313 C6 2321 B3 3074 F4 3071 E10 3079 E10 3087 C9 3305 E3 3319 B2 5007 F5 5016 D5 5026 A8 6019 D9 6307 D3 7306 D5 9010 F7 9302 A3 9349 D4 9507 B6 9515 D10 9523 E8
1106 B10 1301 C1 1309 C10 2001 E7 2013 F5 2041 E10 2302 C2 2314 C5 2323 E3 3015 F4 3072 D8 3080 B9 3088 C9 3307 C5 3320 A1 5008 F4 5017 E7 5027 E6 6021 B9 6308 B5 7307 F4 9011 F6 9303 D1 9500 B3 9508 B10 9516 E5 9524 E3
1107 D10 1302 D2 1311 E4 2002 D5 2014 C6 2043 E8 2303 A5 2315 A2 2324 E2 3017 F5 3073 E8 3081 B9 3090 C9 3308 F3 5001 E4 5009 E6 5018 F10 5303 A1 6029 F8 6309 B5 9001 F6 9012 F6 9308 B4 9501 A3 9509 D10 9517 E10 9525 B4

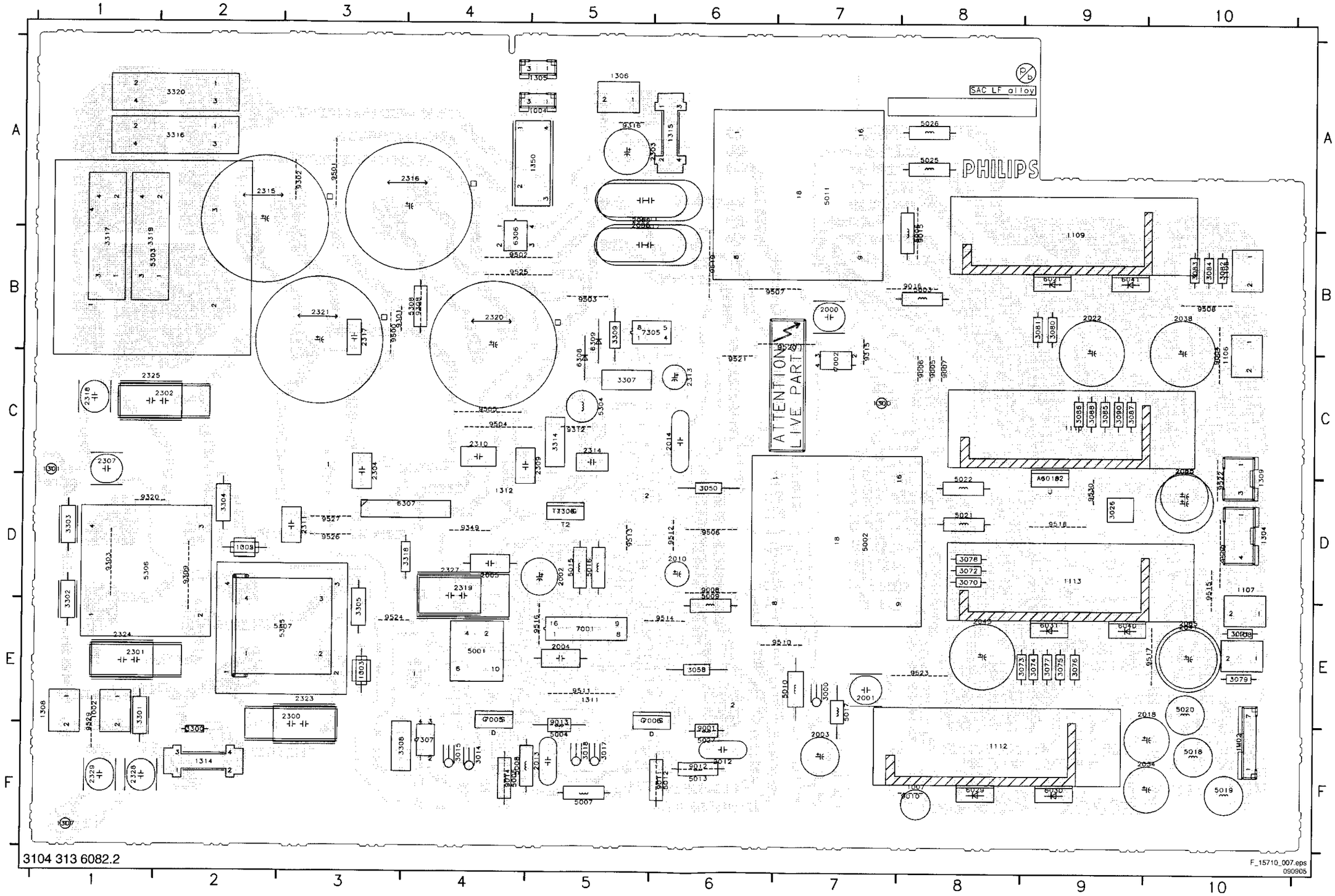

Layout LCD Supply (37") (Bottom Side)

2006 E6 2019 E5 2027 D6 2033 D2 2042 E2 2049 E2 2055 E6 2063 C6 3002 E7 3008 E6 3016 E7 3024 D1 3031 E1 3037 D1 3043 E6 3049 D6 3057 D2 3065 C4 3306 E7 3322 B5 6004 E6 6011 C6 6018 D6 6026 E5 6036 D6 6305 E7 6354 F7 7007 E7 9002 D2 9311 F8
2007 E6 2021 F2 2028 D2 2035 E6 2044 D2 2050 C5 2056 E7 2064 D1 3003 D7 3009 E6 3019 E7 3025 D1 3032 E1 3038 D1 3044 D6 3051 D5 3059 D7 3066 E1 3310 F7 3323 B5 6005 E6 6012 E5 6020 D6 6027 E7 6038 E6 6314 F8 6355 F7 7008 E7 9003 F4 9528 D7
2008 C5 2023 D2 2029 B2 2036 E7 2045 B1 2051 E2 2057 E7 2305 C6 3004 E6 3010 D5 3020 E7 3027 D6 3033 E2 3039 E5 3045 D6 3052 D1 3060 E5 3067 F1 3311 C5 3324 B5 6006 E5 6013 E7 6022 E5 6028 E6 6042 F1 6315 F7 6360 A7 7009 D6 9009 F4
2009 F3 2024 D1 2030 D1 2037 D5 2046 E5 2052 E6 2058 E6 2330 B6 3005 E6 3011 E5 3021 C6 3028 D6 3034 D1 3040 D2 3046 C6 3054 C5 3061 E6 3068 D2 3312 B5 3999 A4 6007 E7 6014 C5 6023 D1 6032 F4 6043 E1 6316 F7 6361 A6 7010 D2 9017 E6
2015 C6 2025 D2 2031 D1 2039 E1 2047 E5 2053 D6 2061 E6 2331 B6 3006 E6 3012 D5 3022 D2 3029 E7 3035 D6 3041 D2 3047 E6 3054 E5 3062 E7 3089 D5 3313 C6 6002 E6 6008 E6 6015 C6 6024 F4 6033 F4 6044 E1 6317 F8 7003 E1 7011 D5 9304 B6
2016 D6 2026 D5 2032 D1 2040 E6 2048 E5 2054 D6 2062 E6 3001 D6 3007 E6 3013 C5 3023 D1 3030 D2 3036 E5 3042 E6 3048 E6 3056 E5 3063 D1 3091 D1 3321 C6 6003 E7 6010 C6 6017 E5 6025 F4 6035 E6 6304 D7 6318 F7 7004 D6 7012 D6 9310 B5

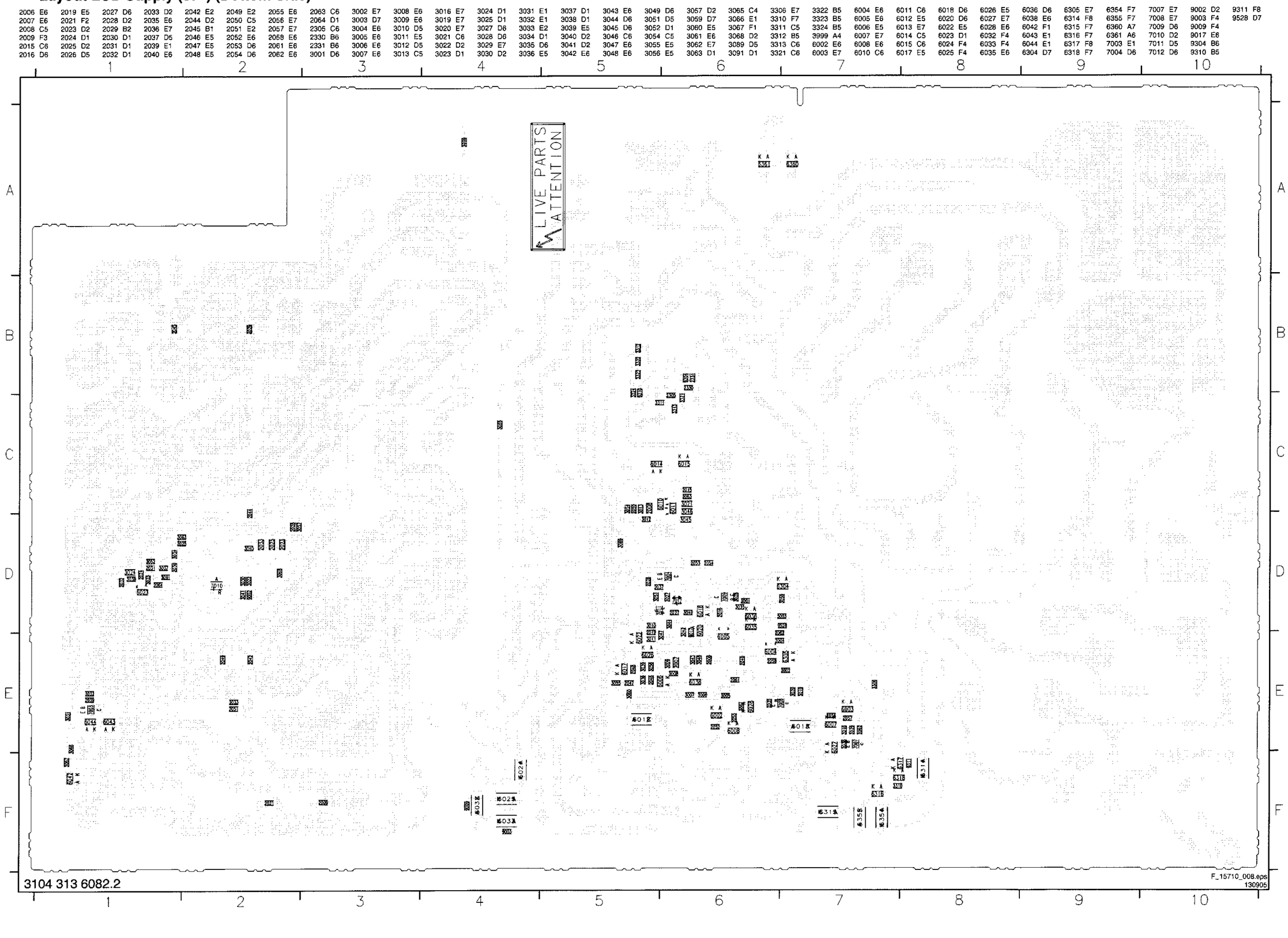

3104 313 6082.2

F_15710_008.eps
130905

LCD Supply (42" - v2): MF + Standby Part A

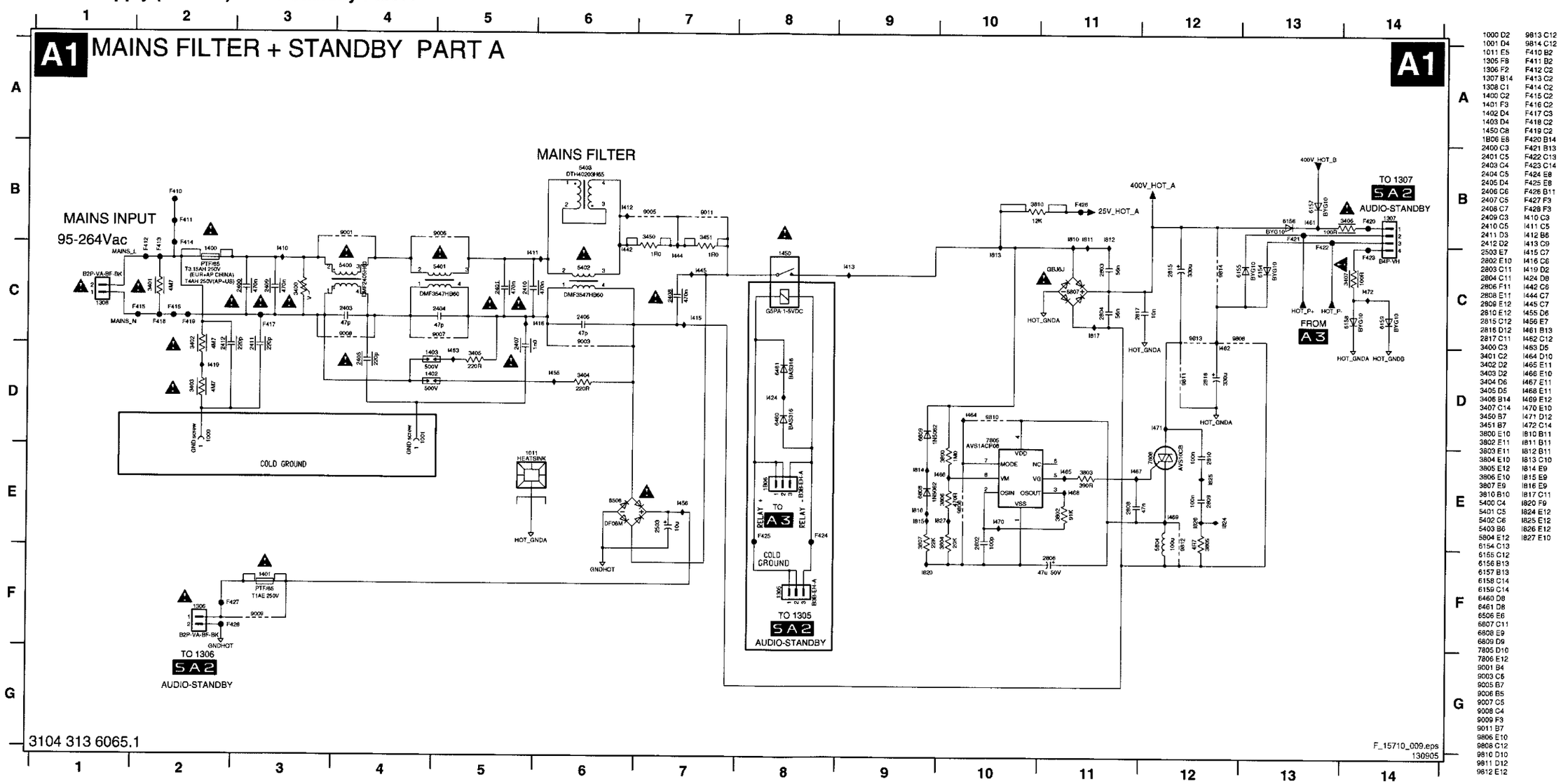

1000 D2	9813 C12
1001 D4	9814 C12
1011 E5	F410 B2
1305 F8	F411 B2
1306 F2	F412 C2
1307 B14	F413 C2
1308 C1	F414 C2
1400 C2	F415 C2
1401 F3	F416 C2
1402 D4	F417 C3
1403 D4	F418 C2
1450 C8	F419 C2
1B06 E8	F420 B14
2400 C3	F421 B13
2401 C5	F422 C13
2403 C4	F423 C14
2404 C5	F424 E8
2405 D4	F425 E8
2406 C6	F426 B11
2407 C5	F427 F3
2408 C7	F428 F3
2409 C3	I410 C3
2410 C5	I411 C5
2411 D3	I412 B6
2412 D2	I413 C9
2503 E7	I415 C7
2802 E10	I416 C6
2803 C11	I419 D2
2804 C11	I424 D8
2806 F11	I442 C6
2808 E11	I444 C7
2809 E12	I445 C7
2810 E12	I455 D6
2815 C12	I456 E7
2816 D12	I461 B13
2817 C11	I462 C12
3400 C3	I463 D5
3401 C2	I464 D10
3402 D2	I465 E11
3403 D2	I466 E10
3404 D6	I467 E11
3405 D5	I468 E11
3406 B14	I469 E12
3407 C14	I470 E10
3450 B7	I471 D12
3451 B7	I472 C14
3800 E10	I810 B11
3802 E11	I811 B11
3803 E11	I812 B11
3804 E10	I813 C10
3805 E12	I814 E9
3806 E10	I815 E9
3807 E9	I816 E9
3810 B10	I817 C11
5400 C4	I820 F9
5401 C5	I824 E12
5402 C6	I825 E12
5403 B6	I826 E12
5804 E12	I827 E10
6154 C13	
6155 C12	
6156 B13	
6157 B13	
6158 C14	
6159 C14	
6460 D8	
6461 D8	
6506 E6	
6807 C11	
6808 E9	
6809 D9	
7805 D10	
7806 E12	
9001 B4	
9003 C6	
9005 B7	
9006 B5	
9007 C5	
9008 C4	
9009 F3	
9011 B7	
9806 E10	
9808 C12	
9810 D10	
9811 D12	
9812 E12	

LCD Supply (42" - v2): Supply Part A

A2 SUPPLY PART A

BIAS SUPPLY

CONTROL

VS-CONTROLLER

SOFTSTART CONTROL

CURRENT PROTECTION

HIGH SIDE DRIVE

LOW SIDE DRIVE

HOT

COLD

HOT GROUND

COLD GROUND

TO 1304 SA1 AUDIO - STBY

TO 1309 SA1 AUDIO - STBY

3104 313 6065.1

F_15710_010.eps 130905

1009 I9	3070 H4	I038 C8
1010 I8	3071 H5	I039 D8
1304 H12	3075 G5	I042 C8
1309 I12	3089 H7	I045 C7
2000 F10	3292 H11	I046 C8
2002 B3	3999 A13	I051 E8
2003 A4	5001 C7	I052 D8
2004 C2	5002 C10	I055 E9
2005 D2	5004 D9	I057 E9
2006 C3	5005 C9	I059 E9
2007 E2	5007 B9	I062 B11
2008 G4	5008 B9	I063 B11
2009 D2	5009 B4	I064 B10
2010 H2	5010 A5	I070 D12
2011 E10	5013 E9	I072 D11
2012 E9	5015 C7	I073 E11
2013 D9	5016 D7	I074 E11
2014 F7	5017 A3	I076 F11
2015 F5	5025 E11	I077 F11
2016 E6	5026 F11	I078 A4
2017 C10	5027 D11	I080 B10
2019 H3	5028 D11	I081 F8
2020 D12	5040 D10	I084 F10
2021 C2	5041 E9	I085 E13
2022 E12	6001 D3	I088 E14
2023 B13	6002 D8	I089 E13
2024 E13	6003 C8	I092 F14
2025 E14	6004 D7	I093 F14
2026 G4	6005 D6	I094 G13
2027 F3	6006 I5	I096 A3
2028 D12	6007 C8	I097 A3
2029 E12	6008 D8	I098 A5
2030 F13	6009 G2	I099 A5
2031 D13	6010 G5	I100 A6
2032 E14	6011 F5	I101 A5
2033 E14	6012 E9	I103 C1
2034 C2	6013 C9	I104 D2
2035 F11	6014 F11	I105 E4
2038 E12	6015 H7	I106 E6
2039 C11	6016 G7	I107 C7
2040 C1	6017 I5	I108 D7
2044 D12	6020 H1	I109 D8
2045 F12	6021 E11	I110 D9
2046 I4	6022 H3	I111 C9
2047 I5	6023 F14	I112 E9
2048 I5	6027 C8	I113 E9
2050 E4	6028 E8	I114 D10
2060 C7	6044 D12	I116 C11
2061 C8	6051 H4	I117 D11
2062 D8	6077 A4	I119 D13
2063 C7	6078 A5	I120 D13
2064 D7	6079 A4	I121 E14
2065 D8	6080 A3	I122 F14
2071 E8	6081 B2	I124 H11
2072 C8	7001 C3	I131 I6
2077 H5	7002 B10	I132 I5
2290 H11	7004 H6	I133 I4
3000 A3	7005 C9	I134 I4
3001 F6	7006 D9	I135 H3
3002 C2	7007 D8	I136 H4
3003 C1	7008 E8	I137 H5
3004 D1	7009 G5	I138 H5
3005 C3	7010 F13	I139 G5
3006 D3	7017 F4	I140 G6
3007 E3	7018 F4	I141 H2
3008 E2	7030 C11	I142 G1
3009 E2	9002 G13	I143 G1
3010 H2	9004 F11	I144 A4
3011 H2	9010 G11	I145 E8
3012 F4	F002 C9	I146 B9
3013 G5	F003 C6	I147 C9
3014 C8	F004 D6	I148 C7
3015 C8	F005 D9	I149 C12
3016 C8	F007 F3	I150 D9
3017 D8	F008 D6	I151 I5
3018 E8	F009 D7	I294 C9
3019 E8	F012 E13	c001 F10
3020 E8	F014 F13	c002 F9
3021 G5	F016 D13	
3022 D13	F017 D12	
3023 E13	F018 B9	
3024 E13	F021 A12	
3025 F13	F022 A13	
3026 G13	F023 F9	
3027 G3	F024 E13	
3028 B10	F025 E13	
3029 C8	F027 E12	
3030 G12	F028 D12	
3031 C12	F029 C10	
3032 C12	F030 H12	
3033 B11	F031 H12	
3034 F14	F032 I12	
3036 E14	F299 A9	
3040 E14	F300 F9	
3041 F14	I006 B3	
3043 D2	I007 C3	
3045 G6	I008 C3	
3046 F6	I009 D2	
3047 H3	I010 D3	
3048 D2	I012 D5	
3050 E3	I018 E3	
3052 D13	I020 F4	
3053 E4	I021 E2	
3055 I6	I022 F3	
3056 I4	I023 F3	
3057 C13	I024 F4	
3058 E3	I025 F3	
3061 E4	I027 C3	
3064 F4	I028 G2	
3065 E5	I029 G3	
3066 F3	I033 F5	
3067 G1	I034 F7	
3068 H4	I036 F6	
	I037 C8	

LCD Supply (42" - v2): MF + Standby Part B

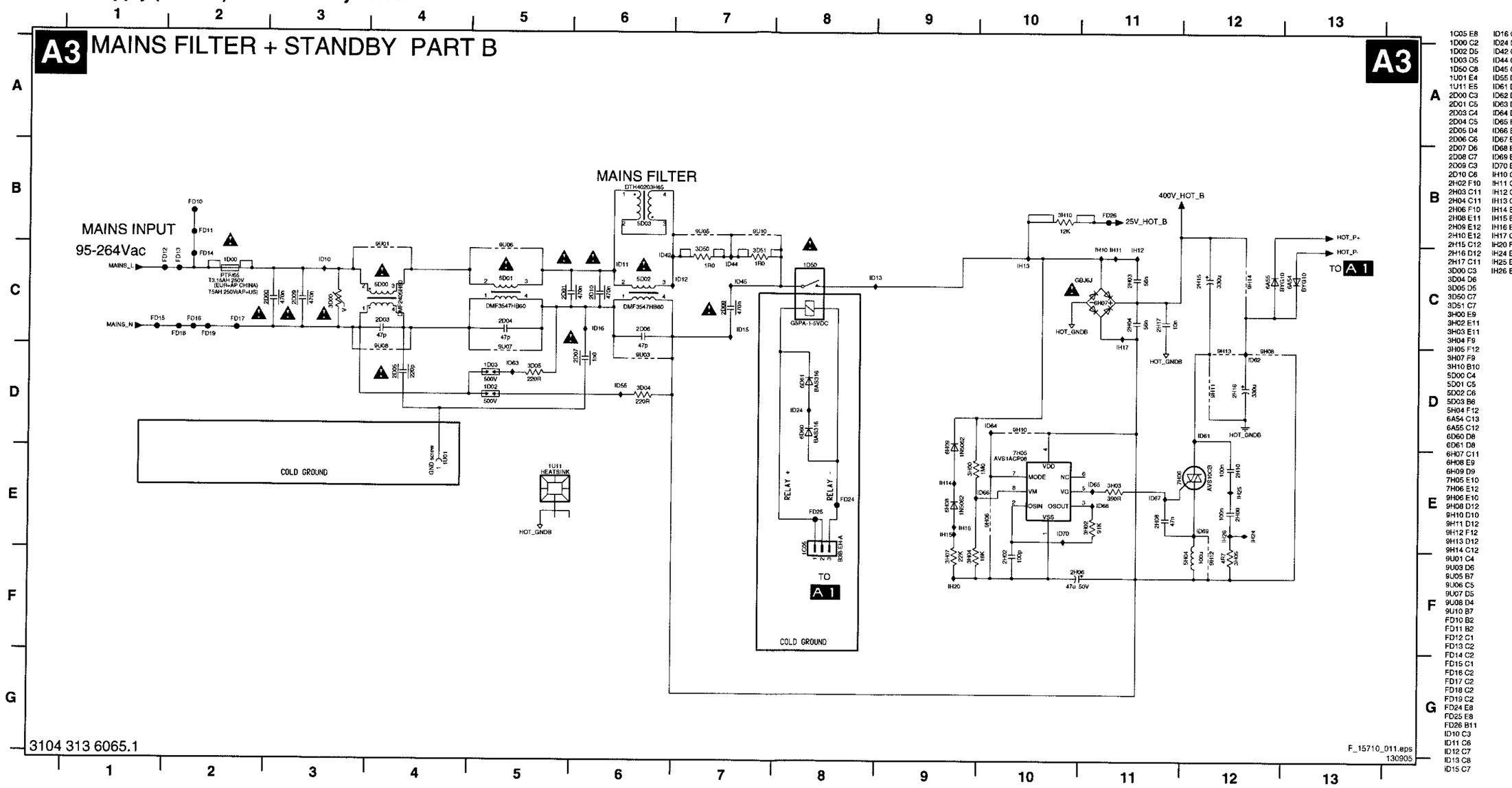

1C05 E8 ID16 C6
1D00 C2 ID24 D8
1D02 D5 ID42 C7
1D03 D5 ID44 C7
1D50 C8 ID45 C7
1U01 E4 ID55 D6
1U11 E5 ID61 D12
2D00 C3 ID62 D12
2D01 C5 ID63 D5
2D03 C4 ID64 D10
2D04 C5 ID65 E11
2D05 D4 ID66 E10
2D06 C6 ID67 E11
2D07 D6 ID68 E11
2D08 C7 ID69 E12
2D09 C3 ID70 E10
2D10 C6 IH10 C11
2H02 F10 IH11 C11
2H03 C11 IH12 C11
2H04 C11 IH13 C10
2H06 F10 IH14 E9
2H08 E11 IH15 E9
2H09 E12 IH16 E9
2H10 E12 IH17 C11
2H15 C12 IH20 F9
2H16 D12 IH24 E12
2H17 C11 IH25 E12
3D00 C3
3D04 D6
3D05 D5
3D50 C7
3D51 C7
3H00 E9
3H02 E11
3H03 E11
3H04 F9
3H05 F12
3H07 F9
3H10 B10
5D00 C4
5D01 C5
5D02 C6
5D03 B6
5H04 F12
6A54 C13
6A55 C12
6D60 D8
6D61 D8
6H07 C11
6H08 E9
6H09 D9
7H05 E10
7H06 E12
9H06 E10
9H08 D12
9H10 D10
9H11 D12
9H12 F12
9H13 D12
9H14 C12
9U01 C4
9U03 D6
9U05 B7
9U06 C5
9U07 D5
9U08 D4
9U10 B7
FD10 B2
FD11 B2
FD12 C1
FD13 C2
FD14 C2
FD15 C1
FD16 C2
FD17 C2
FD18 C2
FD19 C2
FD24 E8
FD25 E8
FD26 B11
ID10 C3
ID11 C6
ID12 C7
ID13 C8
ID15 C7

LCD Supply (42" - v2): Supply Part B

A4 SUPPLY PART B

A4

BIAS SUPPLY

HOT

COLD

CONTROL

VS-CONTROLLER

SOFTSTART CONTROL

CURRENT PROTECTION

HIGH SIDE DRIVE

LOW SIDE DRIVE

HOT GROUND

COLD GROUND

TO 1M02
5A3
AUDIO - STBY

TO 1303
5A1
AUDIO - STBY

TO 1320
5A1
AUDIO - STBY

3104 313 6065.1

F_15710_012.eps
130905

1303 H13	3U70 H4	IA33 I4
1320 I13	3U71 H5	IA34 I4
1M02 H14	3U75 G5	IA35 G3
1U07 G11	3U89 H7	IA36 H4
1U09 I9	5B91 G13	IA37 G5
1U10 I10	5B92 H13	IA38 H5
2B90 G11	5B93 G13	IA39 G5
2B91 G11	5U01 C7	IA40 G6
2B92 G12	5U02 C10	IA42 G1
2B93 H11	5U04 D9	IA43 G1
2B94 H12	5U05 C9	IA44 C14
2U00 E10	5U07 B9	IA45 E9
2U02 B3	5U08 B9	IA46 B9
2U03 A4	5U09 B5	IA47 B9
2U04 C2	5U10 A5	IA48 C7
2U05 D2	5U13 E9	IA49 C12
2U06 C3	5U15 C7	IA50 D9
2U07 E2	5U16 D7	IA51 I5
2U08 G4	5U17 A3	IB90 G12
2U09 D2	5U25 E11	IB91 G12
2U10 H2	5U26 F11	IB92 H11
2U11 E10	5U40 D10	IB93 H12
2U12 E9	5U41 E9	IB94 C9
2U13 D9	6B91 G12	IU05 A4
2U14 F7	6B93 H12	IU06 B2
2U15 F5	6U01 D3	IU07 C3
2U16 E6	6U02 D8	IU08 C3
2U17 C10	6U03 C8	IU09 D2
2U19 H3	6U04 D7	IU10 D3
2U21 C2	6U05 D6	IU12 D5
2U22 E12	6U06 I5	IU18 E3
2U23 B14	6U07 C8	IU20 F4
2U24 E13	6U08 D8	IU21 E2
2U25 E14	6U09 G2	IU22 F3
2U26 G4	6U10 G5	IU23 F3
2U27 F3	6U11 F5	IU24 F4
2U29 E12	6U12 E9	IU25 F3
2U30 F13	6U13 C9	IU27 C3
2U32 E14	6U15 H7	IU28 G2
2U33 E14	6U16 G7	IU29 G3
2U34 C2	6U17 I5	IU33 F5
2U38 E12	6U20 H1	IU34 F7
2U39 C12	6U21 E11	IU36 F6
2U40 C1	6U22 H3	IU37 C9
2U45 F12	6U23 E14	IU38 C8
2U46 I4	6U27 C8	IU39 D8
2U47 I5	6U28 E8	IU41 H2
2U48 I5	6U51 H4	IU42 C8
2U50 E4	6U77 A4	IU45 C8
2U60 C7	6U78 A5	IU46 C8
2U61 B8	6U79 A4	IU51 E8
2U62 D8	6U81 B2	IU52 D8
2U63 C7	6U82 C3	IU55 E9
2U64 D7	7U02 B10	IU57 E9
2U65 D8	7U04 H6	IU59 E9
2U71 E8	7U05 C9	IU62 B11
2U72 C8	7U06 D9	IU63 B11
2U77 H5	7U07 C8	IU64 B10
3B92 G11	7U08 E9	IU73 E11
3U00 A3	7U09 G5	IU74 E12
3U01 F6	7U10 F13	IU76 F11
3U02 C2	7U17 F4	IU77 F12
3U03 C1	7U18 F4	IU79 B10
3U04 D1	7U30 C11	IU80 F11
3U05 C3	9U02 G13	IU81 F8
3U06 D3	9U04 B5	IU84 F10
3U07 E3	FB90 H14	IU85 E13
3U08 E2	FB92 G14	IU88 E14
3U09 E2	FB93 G13	IU89 E13
3U10 H2	FB94 H13	IU92 F14
3U11 H2	FB95 H14	IU93 F14
3U12 F4	FB96 G14	IU94 G13
3U13 G5	FB97 G13	IU96 A3
3U14 C8	FB98 H13	IU97 A3
3U15 C8	FC00 F9	IU98 A5
3U16 C8	FU02 C9	IU99 A5
3U17 D8	FU03 D6	cU01 F10
3U18 E8	FU04 D6	cU02 F9
3U19 E8	FU05 D9	
3U20 E8	FU07 F9	
3U21 G6	FU08 D6	
3U22 D13	FU09 D7	
3U23 E13	FU12 E13	
3U24 E13	FU14 F13	
3U25 F13	FU17 D12	
3U26 G13	FU18 A9	
3U27 G3	FU23 F9	
3U28 B10	FU24 E13	
3U29 C8	FU25 E13	
3U30 F12	FU27 D12	
3U31 C12	FU28 D12	
3U32 C12	FU29 C10	
3U33 B11	FU30 H12	
3U34 F14	FU32 I12	
3U38 E14	FU99 A9	
3U39 C13	IA00 A6	
3U40 E14	IA01 A5	
3U41 F14	IA03 C1	
3U43 D2	IA04 D2	
3U45 G6	IA05 E4	
3U46 F6	IA06 E6	
3U47 H3	IA07 C7	
3U48 D2	IA08 D7	
3U50 E3	IA09 D6	
3U52 D13	IA10 D9	
3U53 E4	IA11 C9	
3U55 I6	IA12 E9	
3U56 I4	IA13 E9	
3U57 C13	IA14 D10	
3U58 E3	IA20 E13	
3U61 E4	IA21 E14	
3U64 F4	IA22 F14	
3U65 E5	IA23 F11	
3U66 F3	IA24 G11	
3U67 G1	IA31 I5	
3U68 G4	IA32 I5	

Layout LCD Supply (42" - v2) (Top Side)

2006 E6 2007 E6 2008 C5 2009 F3 2015 C6 2016 D6 2019 E5 2021 F2 2023 D2 2024 D1 2025 D2 2026 D5 2027 D6 2028 D2 2029 B2 2030 D1 2031 D1 2032 D1 2033 D2 2035 E6 2036 E7 2037 D5 2039 E1 2040 E6 2042 E2 2044 D2 2045 B1 2046 E5 2047 E5 2048 E5 2049 E2 2050 C5 2051 E2 2052 E6 2053 D6 2054 D6 2055 E6 2056 E7 2057 E7 2058 E6 2061 E6 2062 E6 2063 C6 2064 D1 2305 C6 2330 B6 2331 B6 3001 D6 3002 E7 3003 D7 3004 E6 3005 E6 3006 E6 3007 E6 3008 E6 3009 E6 3010 D5 3011 E5 3012 D5 3013 C5 3016 E7 3019 E7 3020 E7 3021 C6 3022 D2 3023 D1 3024 D1 3025 D1 3027 D6 3028 D6 3029 E7 3030 D2 3031 E1 3032 E1 3033 E2 3034 D1 3035 D6 3036 E5 3037 D1 3038 D1 3039 E5 3040 D2 3041 D2 3042 E6 3043 E6 3044 D6 3045 D6 3046 C6 3047 E6 3048 E6 3049 D6 3051 D5 3052 D1 3054 C5 3055 E5 3056 E5 3057 D2 3059 D7 3060 E5 3061 E6 3062 E7 3063 D1 3065 C4 3066 E1 3067 F1 3068 D2 3089 D5 3091 D1 3306 E7 3310 F7 3311 C5 3312 B5 3313 C6 3321 C6 3322 B5 3323 B5 3324 B5 3999 A4 6002 E6 6003 E7 6004 E6 6005 E6 6006 E5 6007 E7 6008 E6 6010 C6 6011 C6 6012 E5 6013 E7 6014 C5 6015 C6 6017 E5 6018 D6 6020 D6 6022 E5 6023 D1 6024 F4 6025 F4 6026 E5 6027 E7 6028 E6 6032 F4 6033 F4 6035 E6 6036 D6 6038 E6 6042 F1 6043 E1 6044 E1 6304 D7 6305 E7 6314 F8 6315 F7 6316 F7 6317 F8 6318 F7 6354 F7 6355 F7 6360 A7 6361 A6 7003 E1 7004 D6 7006 D5 7007 E7 7008 E7 7009 D6 7010 D2 7011 D5 7012 D6 9002 D2 9003 F4 9009 F4 9017 E6 9304 B6 9310 B5 9311 F8 9528 D7

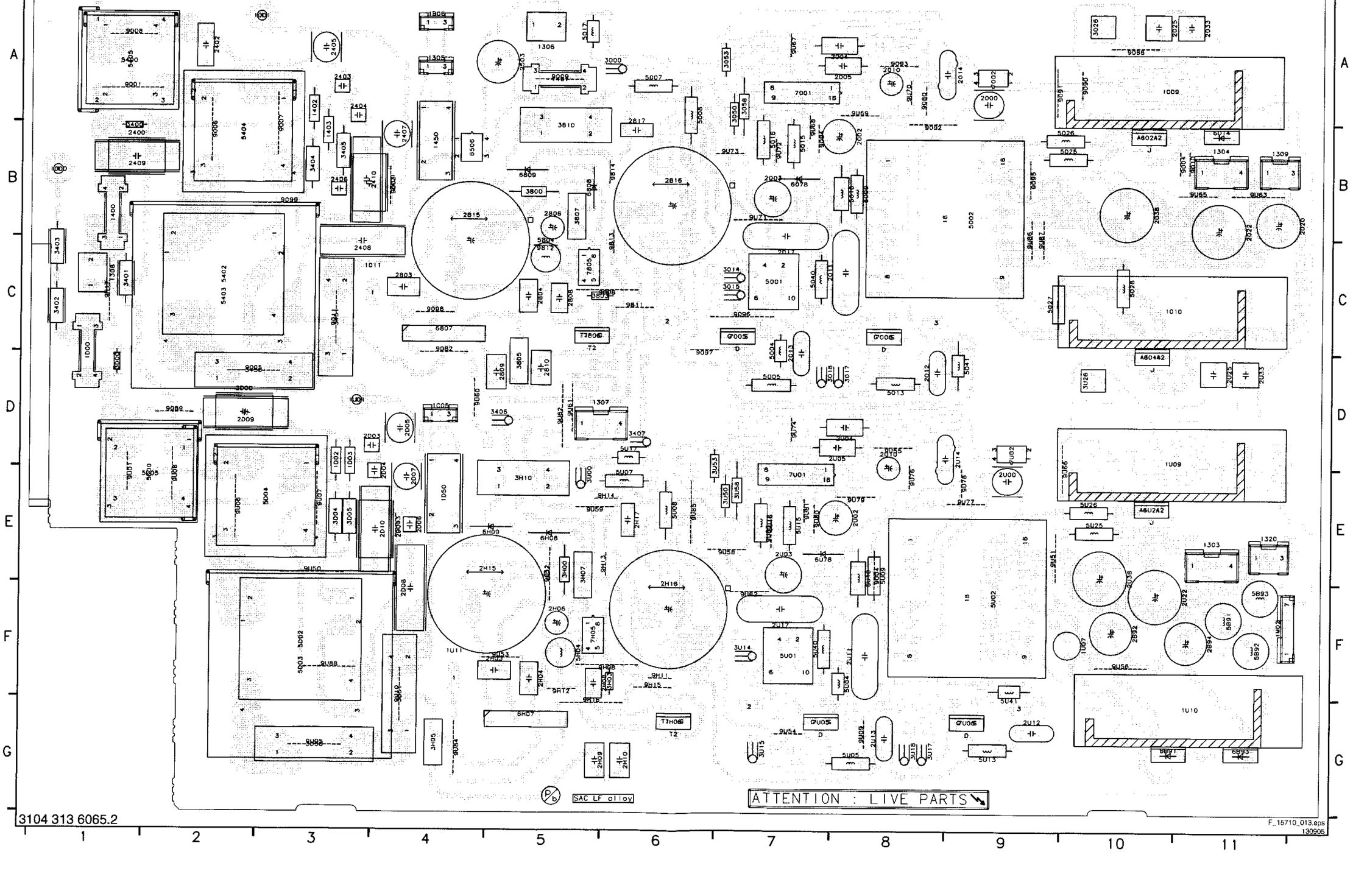

Layout LCD Supply (42" - v2) (Overview Bottom Side)

2006 A5	2024 A2	2035 B1	2060 C5	2290 B3	2U09 D4	2U29 E2	2U48 E4	2U72 G5	3008 A5	3021 A4	3031 A1	3045 A4	3064 A5	3292 B3	3U02 D5	3U11 D4	3U24 D1	3U34 D1	3U48 D5	3U67 E4	6004 B5	6013 C5	6051 A4	6158 C6	6U02 G3	6U11 D5	6U27 G5	7009 A4	7U10 D2	9H10 F7
2007 A5	2026 A5	2039 A1	2061 C5	2802 C7	2U15 D4	2U30 D1	2U50 D5	2U77 D4	3009 A5	3022 A1	3032 A1	3046 A4	3065 A5	3802 C7	3U03 D4	3U12 D5	3U25 D1	3U38 D1	3U52 D2	3U68 D4	6005 A5	6015 A4	6077 B5	6159 D6	6U03 G5	6U12 F3	6U28 G4	7010 A2	7U17 D5	9U02 D2
2008 A5	2027 A5	2040 A5	2062 C5	2890 F3	2U16 E5	2U32 D1	2U60 G5	3001 A4	3010 A4	3023 A2	3033 A3	3047 A4	3066 A5	3804 C7	3U04 E4	3U13 D5	3U27 D5	3U39 E1	3U55 D4	3U70 D4	6006 A4	6016 A4	6079 A6	6460 A8	6U04 E5	6U13 F5	6U51 D4	7017 A5	7U18 D5	9U57 D1
2009 A4	2028 D2	2044 D2	2063 C5	2891 G1	2U19 D4	2U34 D4	2U61 F5	3002 A5	3011 A4	3024 A2	3034 A1	3048 A5	3067 A4	3806 C7	3U05 D5	3U16 G5	3U28 D3	3U40 D1	3U56 D4	3U71 D4	6007 C5	6017 A4	6080 A6	6461 A8	6U05 E5	6U15 D4	6U77 E4	7018 A5	7U30 E1	
2015 A4	2029 B2	2045 B2	2064 C5	2893 G1	2U21 D4	2U39 D1	2U62 G4	3003 A4	3012 A5	3025 A1	3037 A2	3052 A2	3068 A4	3999 C2	3U06 D5	3U19 G4	3U29 G5	3U41 D1	3U57 D2	3U75 D4	6008 C5	6020 A4	6081 B4	6A54 D7	6U06 D4	6U16 D3	6U79 D6	7030 A1	9002 A2	
2016 A5	2030 A1	2046 A4	2065 C4	2H02 F7	2U23 D2	2U40 E5	2U63 F5	3004 A4	3013 A5	3027 A5	3038 A1	3055 A4	3070 A4	3B92 F3	3U07 E5	3U20 G4	3U30 D1	3U43 D5	3U61 D5	3U89 D3	6009 A4	6022 A4	6154 D6	6A55 D7	6U07 F5	6U17 E4	6U81 E4	7U04 D4	9085 A1	
2019 A4	2031 A2	2047 A4	2071 C4	2U06 E5	2U24 D1	2U45 E2	2U64 F5	3005 A5	3016 C6	3028 A4	3040 A1	3056 A4	3071 A4	3H02 F7	3U08 E5	3U21 D4	3U31 E1	3U45 D5	3U64 D5	6001 A5	6010 A5	6023 A1	6155 D6	6D60 D8	6U08 G4	6U20 E4	7004 A4	7U07 G5	9806 C7	
2021 A4	2032 A2	2048 A4	2072 C6	2U07 E5	2U26 D5	2U46 D4	2U65 G4	3006 A5	3019 C4	3029 C6	3041 A1	3057 A2	3075 A4	3H04 F7	3U09 E5	3U22 E1	3U32 D1	3U46 D5	3U65 D5	6002 C4	6011 A5	6027 C6	6156 D7	6D61 D8	6U09 D4	6U22 D4	7007 C6	7U08 G4	9810 C7	
2023 A2	2034 A4	2050 A5	2077 A4	2U08 D5	2U27 D5	2U47 D4	2U71 G4	3007 A5	3020 C4	3030 A2	3043 A5	3061 A5	3089 A4	3U01 D4	3U10 E4	3U23 D1	3U33 D3	3U47 D4	3U66 D5	6003 C5	6012 C4	6028 C4	6157 E7	6U01 D5	6U10 D4	6U23 D1	7008 C5	7U09 D4	9H06 F7	

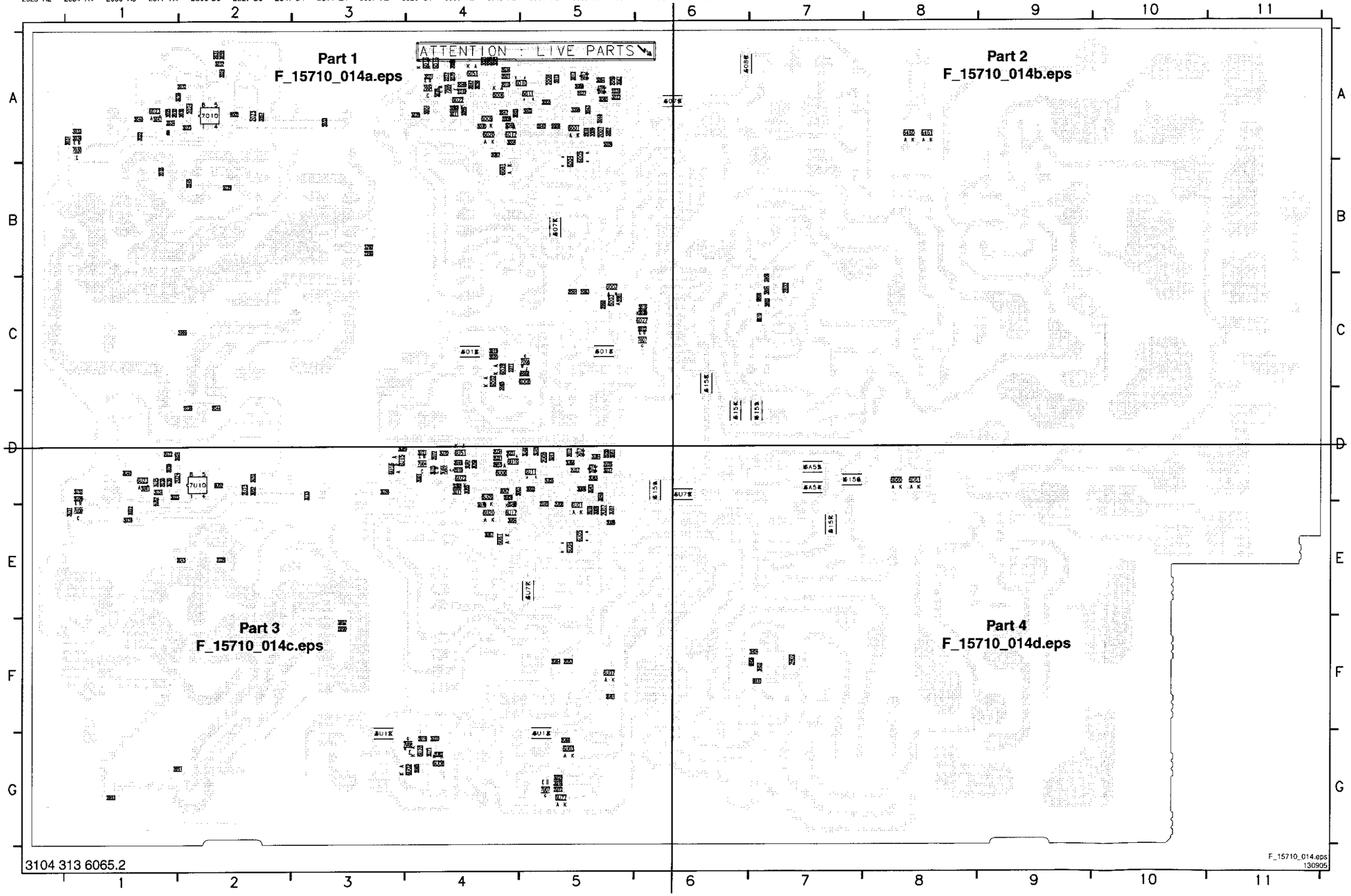

Layout LCD Supply (42" - v2) (Part 1 Bottom Side)

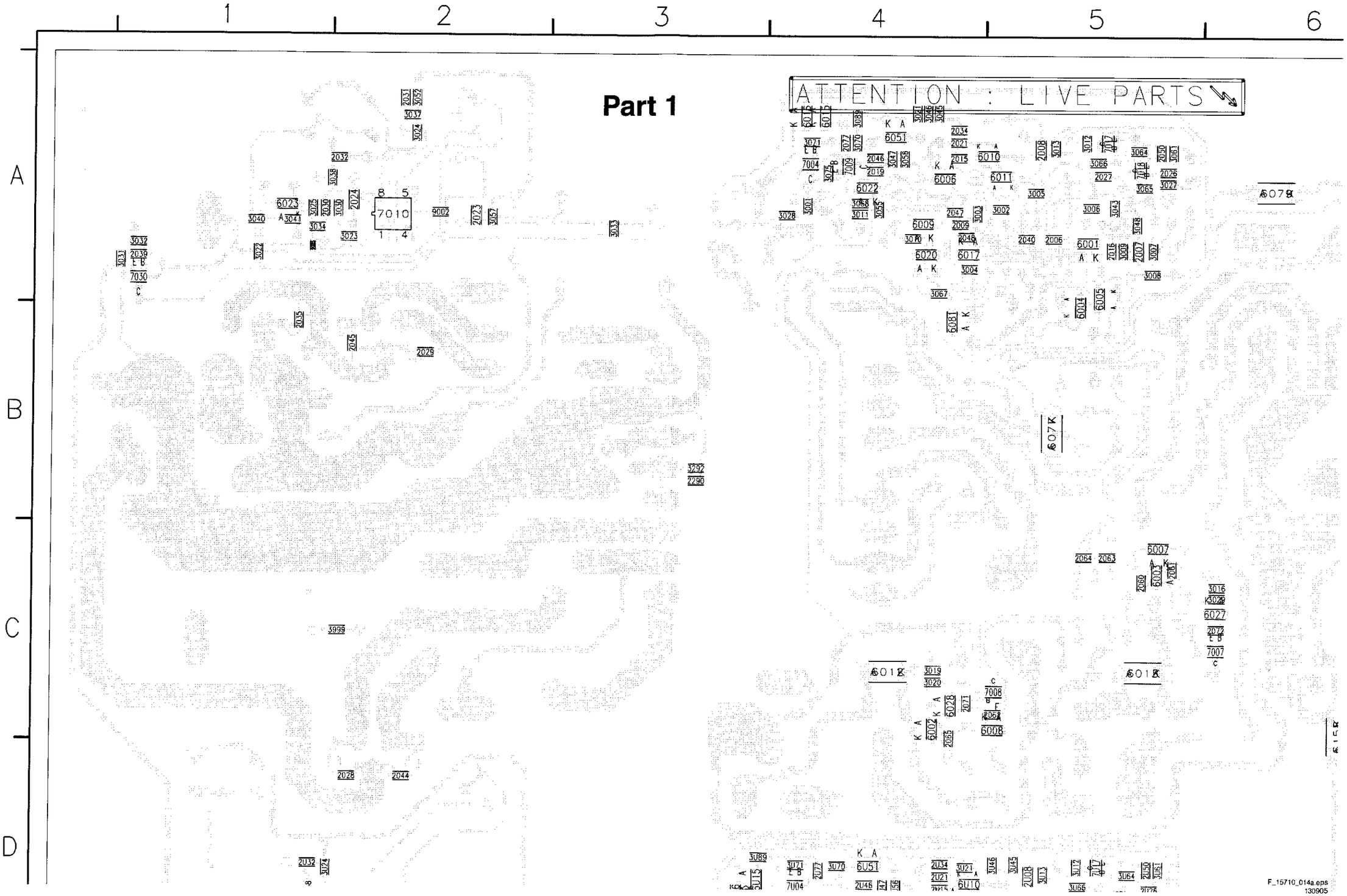

Layout LCD Supply (42" - v2) (Part 2 Bottom Side)

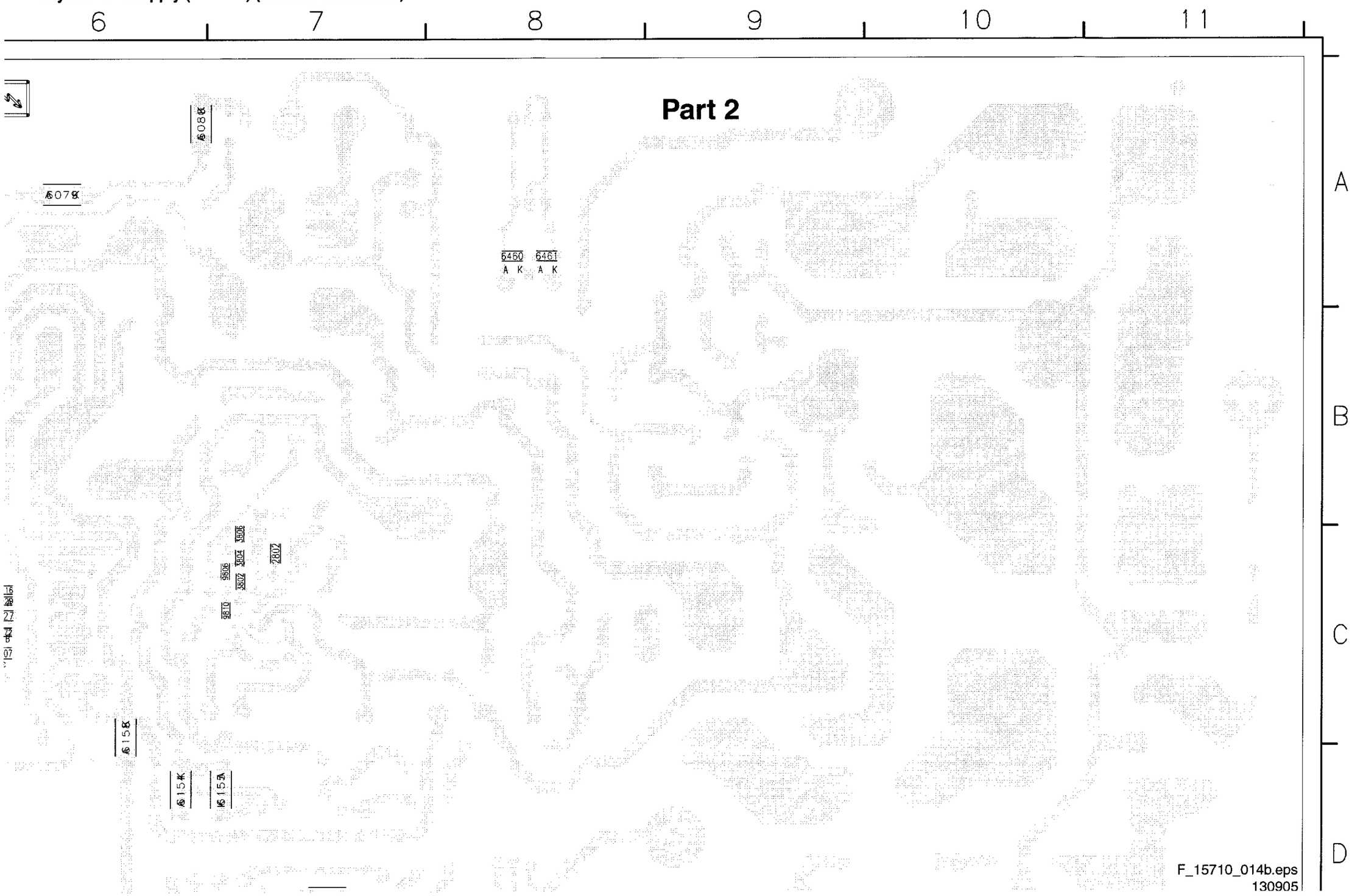

Layout LCD Supply (42" - v2) (Part 3 Bottom Side)

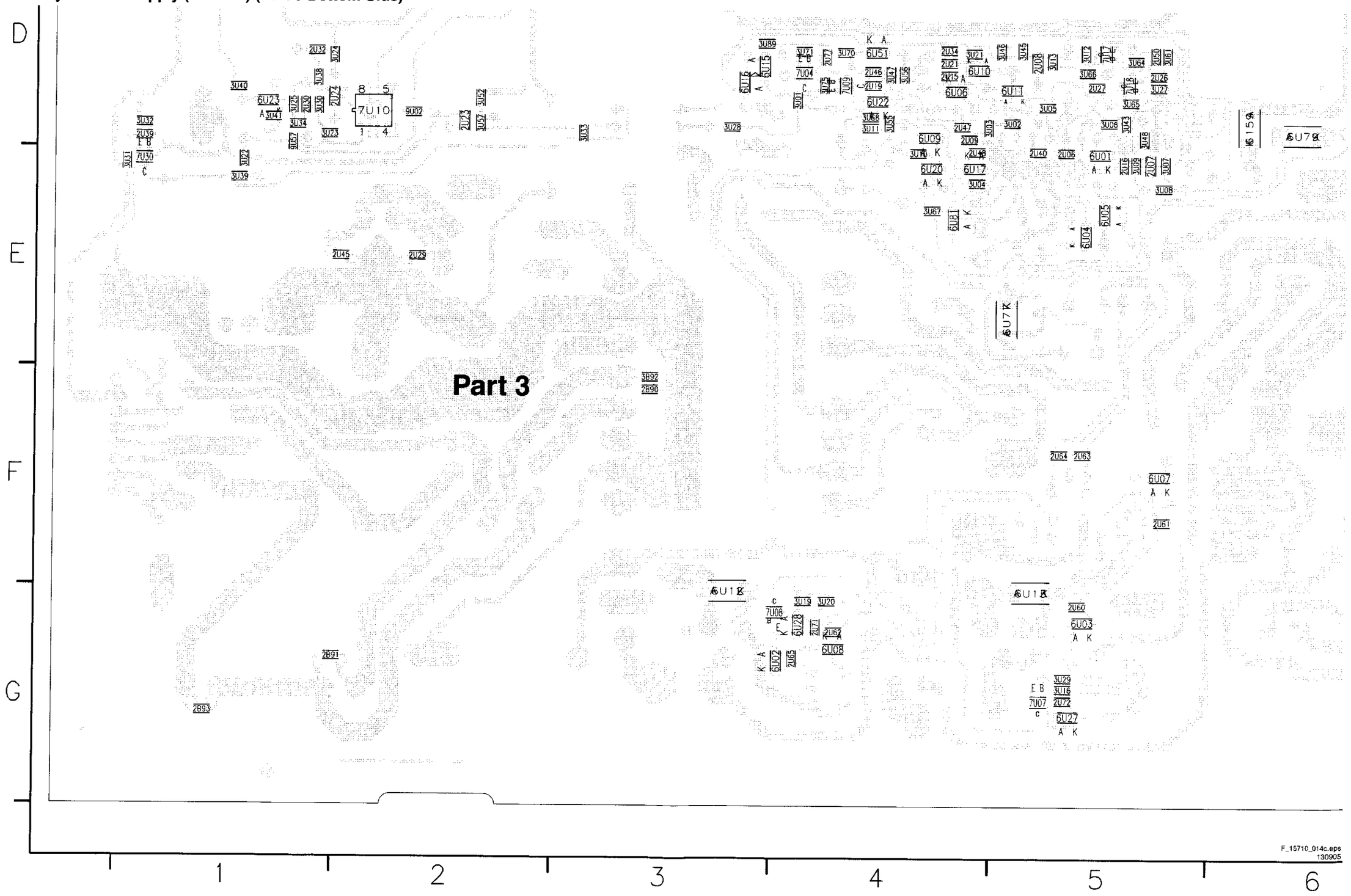

Layout LCD Supply (42" - v2) (Part 4 Bottom Side)

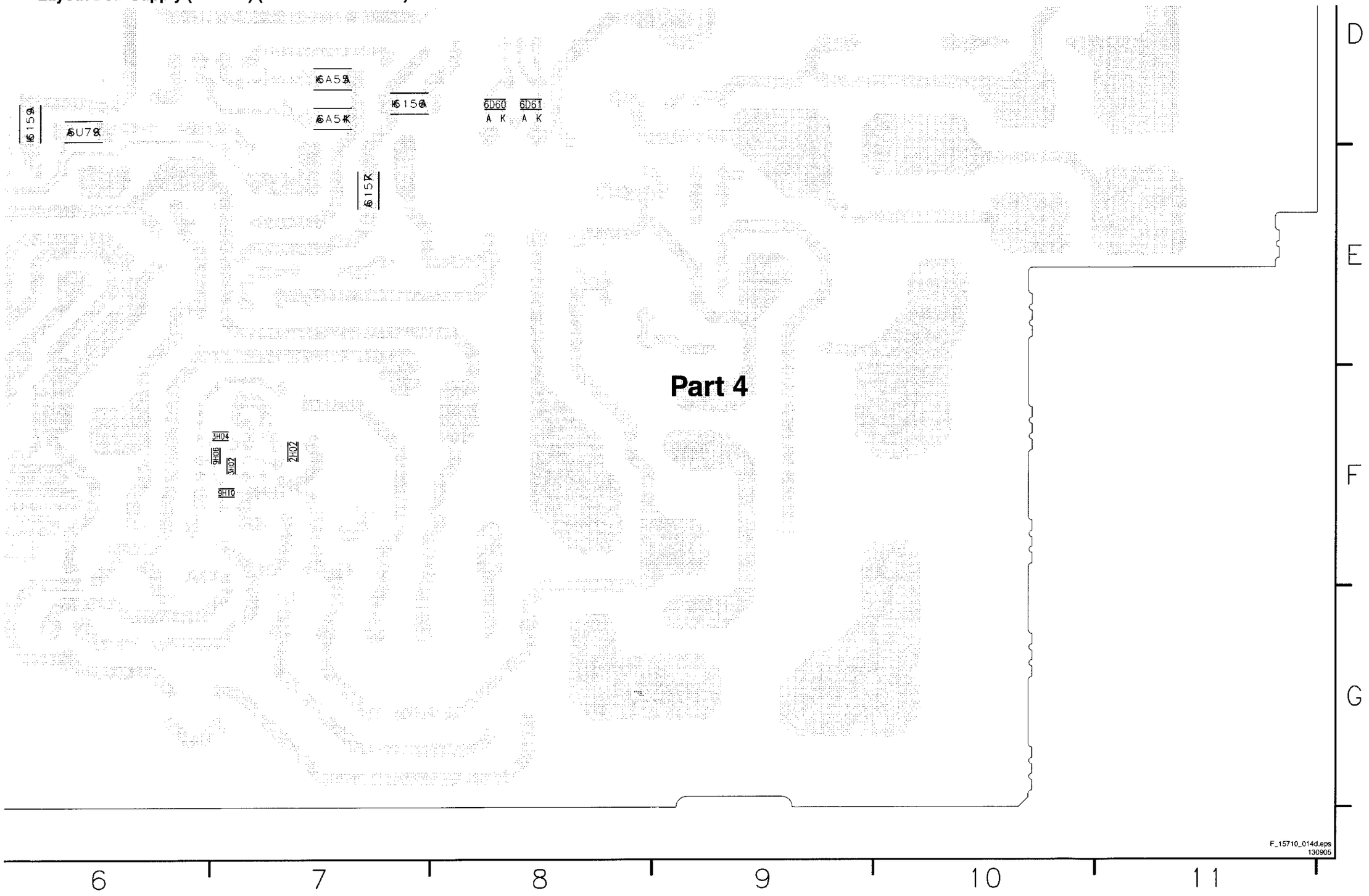

LCD Supply (42" - v3): MF + Standby Part A

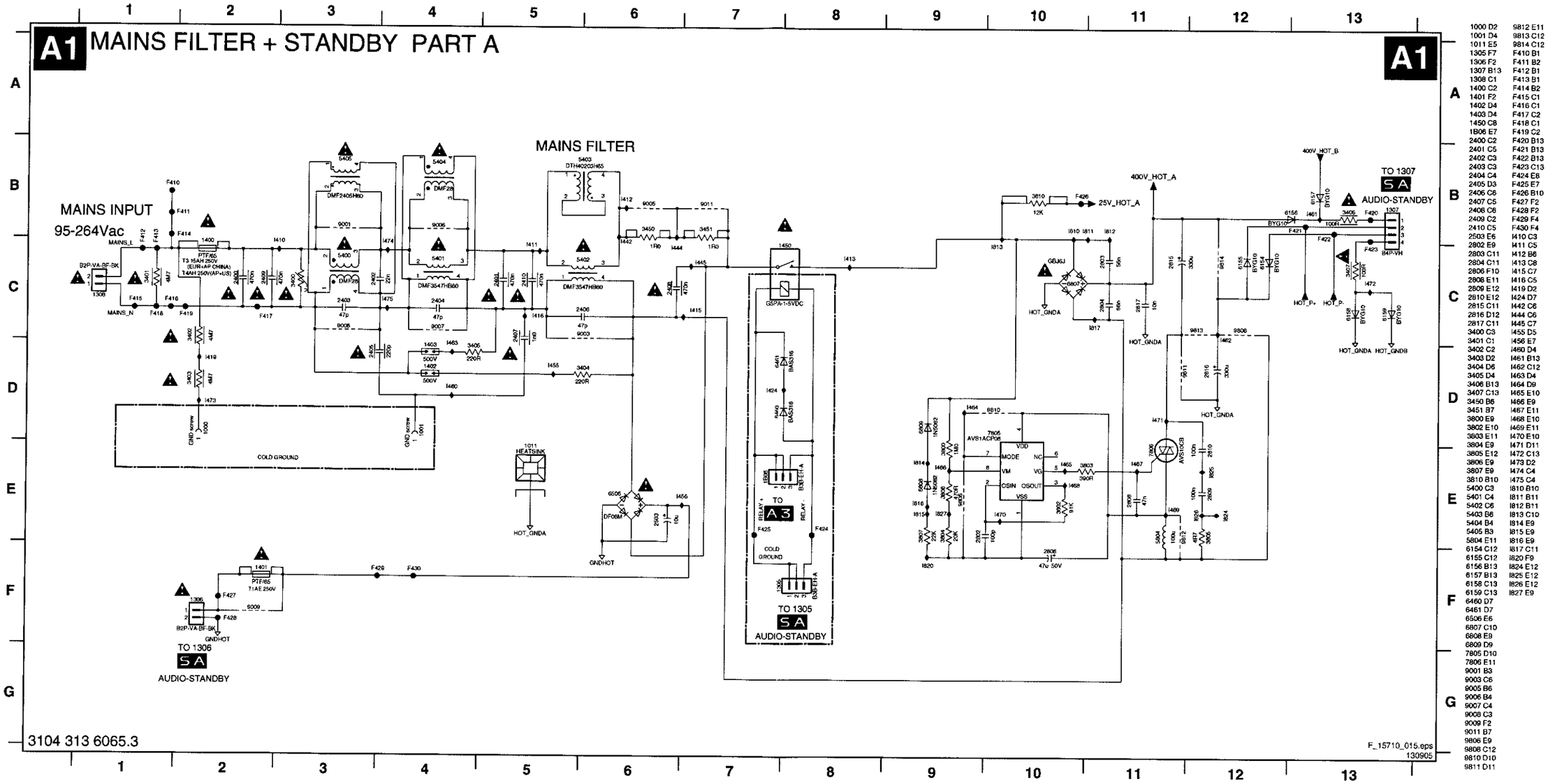

1000 D2	9812 E11
1001 D4	9813 C12
1011 E5	9814 C12
1305 F7	F410 B1
1306 F2	F411 B2
1307 B13	F412 B1
1308 C1	F413 B1
1400 C2	F414 B2
1401 F2	F415 C1
1402 D4	F416 C1
1403 D4	F417 C2
1450 C8	F418 C1
1B06 E7	F419 C2
2400 C2	F420 B13
2401 C5	F421 B13
2402 C3	F422 B13
2403 C3	F423 C13
2404 C4	F424 E8
2405 D3	F425 E7
2406 C6	F426 B10
2407 C5	F427 F2
2408 C6	F428 F2
2409 C2	F429 F4
2410 C5	F430 F4
2503 E6	I410 C3
2802 E9	I411 C5
2803 C11	I412 B6
2804 C11	I413 C8
2806 F10	I415 C7
2808 E11	I416 C5
2809 E12	I419 D2
2810 E12	I424 D7
2815 C11	I442 C6
2816 D12	I444 C6
2817 C11	I445 C7
3400 C3	I455 D5
3401 C1	I456 E7
3402 C2	I460 D4
3403 D2	I461 B13
3404 D6	I462 C12
3405 D4	I463 D4
3406 B13	I464 D9
3407 C13	I465 E10
3450 B6	I466 E9
3451 B7	I467 E11
3800 E9	I468 E10
3802 E10	I469 E11
3803 E11	I470 E10
3804 E9	I471 D11
3805 E12	I472 C13
3806 E9	I473 D2
3807 E9	I474 C4
3810 B10	I475 C4
5400 C3	I810 B10
5401 C4	I811 B11
5402 C6	I812 B11
5403 B6	I813 C10
5404 B4	I814 E9
5405 B3	I815 E9
5804 E11	I816 E9
6154 C12	I817 C11
6155 C12	I820 F9
6156 B13	I824 E12
6157 B13	I825 E12
6158 C13	I826 E12
6159 C13	I827 E9
6460 D7	
6461 D7	
6506 E6	
6807 C10	
6808 E9	
6809 D9	
7805 D10	
7806 E11	
9001 B3	
9003 C6	
9005 B6	
9006 B4	
9007 C4	
9008 C3	
9009 F2	
9011 B7	
9806 E9	
9808 C12	
9810 D10	
9811 D11	

LCD Supply (42" - v3): Supply Part A

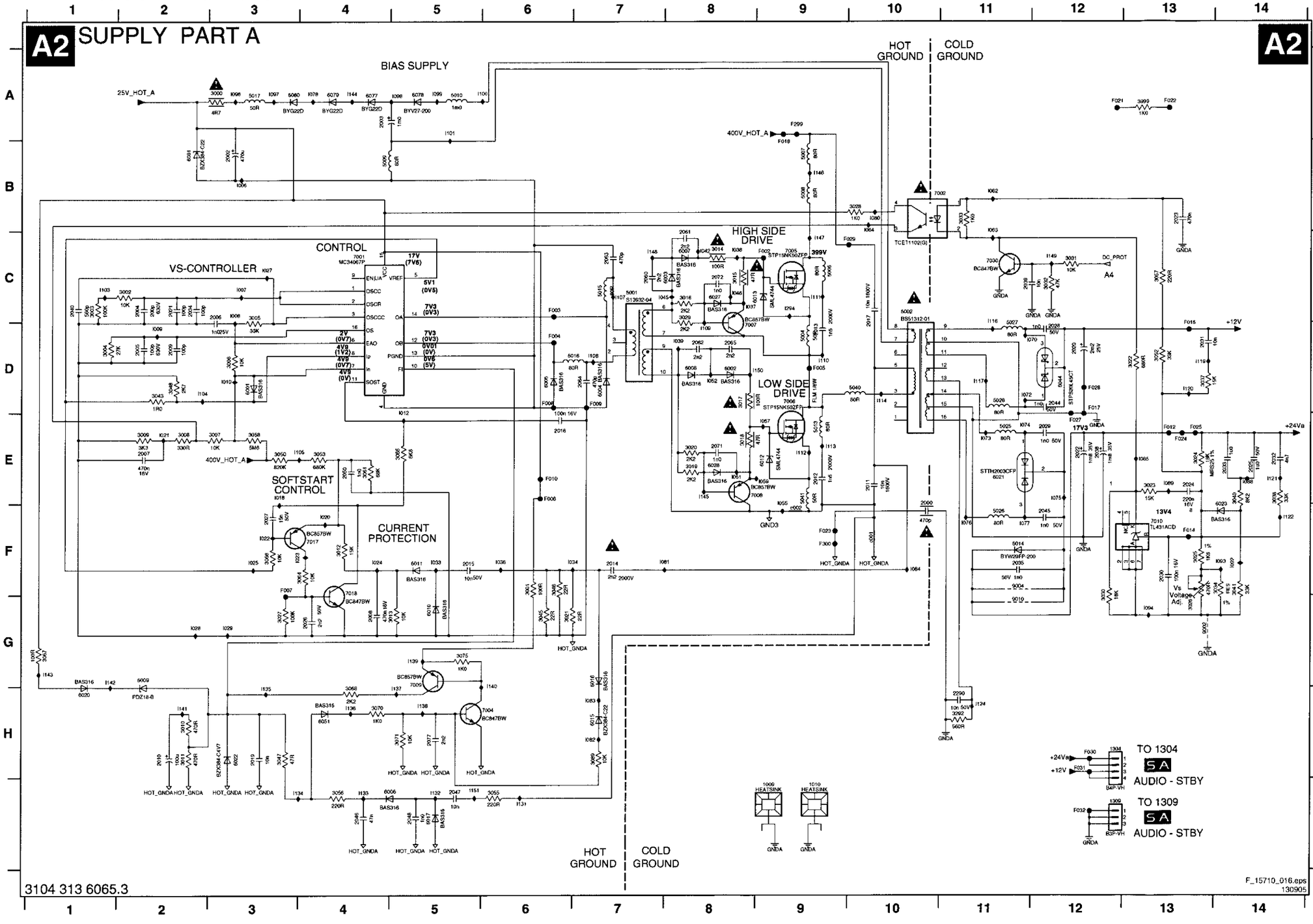

1009 I9	3070 H4	I036 F6
1010 I9	3071 H5	I037 C8
1304 H12	3075 G5	I038 C8
1309 I12	3089 H7	I039 D8
2000 F10	3292 H11	I042 C8
2002 B3	3959 A13	I045 C7
2003 A4	5001 C7	I046 C8
2004 C2	5002 C10	I051 E8
2005 D2	5004 D9	I052 D8
2006 C3	5005 C9	I055 E9
2007 E2	5007 B9	I057 E9
2008 G4	5008 B9	I059 E9
2009 D2	5009 B4	I062 B11
2010 H2	5010 A5	I063 B11
2011 E10	5013 E9	I064 B10
2012 E9	5015 C7	I070 D12
2013 D9	5016 D7	I072 D11
2014 F7	5017 A3	I073 E11
2015 F5	5025 E11	I074 E11
2016 E6	5026 F11	I075 E12
2017 C10	5027 D11	I076 F11
2019 H3	5028 D11	I077 F11
2020 D12	5040 D10	I078 A4
2021 C2	5041 E9	I080 B10
2022 E12	6001 D3	I081 F8
2023 B13	6002 D8	I082 H7
2024 E13	6003 C8	I083 H7
2025 E14	6004 D7	I084 F10
2026 G4	6005 D6	I085 E13
2027 F3	6006 I5	I088 E14
2028 D12	6007 C6	I089 E13
2029 E12	6008 D6	I092 F14
2030 F13	6009 G2	I093 F14
2031 D13	6010 G6	I094 G13
2032 E14	6011 F5	I095 A3
2033 E14	6012 E9	I097 A3
2034 C2	6013 C9	I098 A5
2035 F11	6014 F11	I099 A5
2038 E12	6015 H7	I100 A6
2039 C11	6016 G7	I101 A5
2040 C1	6017 I5	I103 C1
2044 D12	6020 H1	I104 D2
2045 F12	6021 E11	I105 E4
2046 I4	6022 H3	I107 C7
2047 I5	6023 F14	I108 D7
2048 I5	6027 C8	I109 D8
2050 E4	6028 E8	I110 D9
2060 C7	6044 D12	I111 C9
2061 C8	6051 H4	I112 E9
2062 D8	6077 A4	I113 E9
2063 C7	6078 A5	I114 D10
2064 D7	6079 A4	I116 C11
2065 D8	6080 A3	I117 D11
2071 E8	6081 B2	I119 D13
2072 C8	7001 C4	I120 D13
2077 H5	7002 B10	I121 E14
2290 H11	7004 H6	I122 F14
3000 A3	7005 C9	I124 H11
3001 F5	7006 D9	I131 I6
3002 C2	7007 D8	I132 I5
3003 C1	7008 E8	I133 I4
3004 D1	7009 G5	I134 I4
3005 C3	7010 F13	I135 H3
3006 D3	7017 F4	I136 H4
3007 E3	7018 F4	I137 H5
3008 E2	7030 C11	I138 H5
3009 E2	9002 G13	I139 G5
3010 H2	9004 F11	I140 G6
3011 H2	9010 G11	I141 H2
3012 F4	F002 C9	I142 G1
3013 G5	F003 C6	I143 G1
3014 C8	F004 D6	I144 A4
3015 C8	F005 D9	I145 E8
3016 C8	F006 E6	I146 B9
3017 D8	F007 F3	I147 C9
3018 E8	F008 D5	I148 C12
3019 E8	F009 D7	I149 C12
3020 E8	F010 E6	I150 D9
3021 G6	F012 E13	I151 I5
3022 D13	F014 F13	I294 C9
3023 E13	F016 D13	c001 F10
3024 E13	F017 D12	c002 F9
3025 F13	F018 B9	
3026 G13	F021 A12	
3027 G3	F022 A13	
3028 B10	F023 F9	
3029 C8	F024 E13	
3030 G12	F025 E13	
3031 C12	F027 E12	
3032 C12	F028 D12	
3033 B11	F029 C10	
3034 F14	F030 H12	
3037 D13	F031 H12	
3038 E14	F032 I12	
3040 E14	F299 A9	
3041 F14	F300 F9	
3043 D2	I006 B3	
3045 G6	I007 C3	
3046 F6	I008 C3	
3047 H3	I009 D2	
3048 D2	I010 D3	
3050 E3	I012 D5	
3052 D13	I018 E3	
3053 E4	I020 F4	
3055 I6	I021 E2	
3056 I4	I022 F3	
3057 C13	I023 F3	
3058 E3	I024 F4	
3061 E4	I025 F3	
3064 F4	I027 C3	
3065 E5	I028 G2	
3066 F3	I029 G3	
3067 G1	I033 F5	
3068 H4	I034 F7	

LCD Supply (42" - v3): MF + Standby Part B

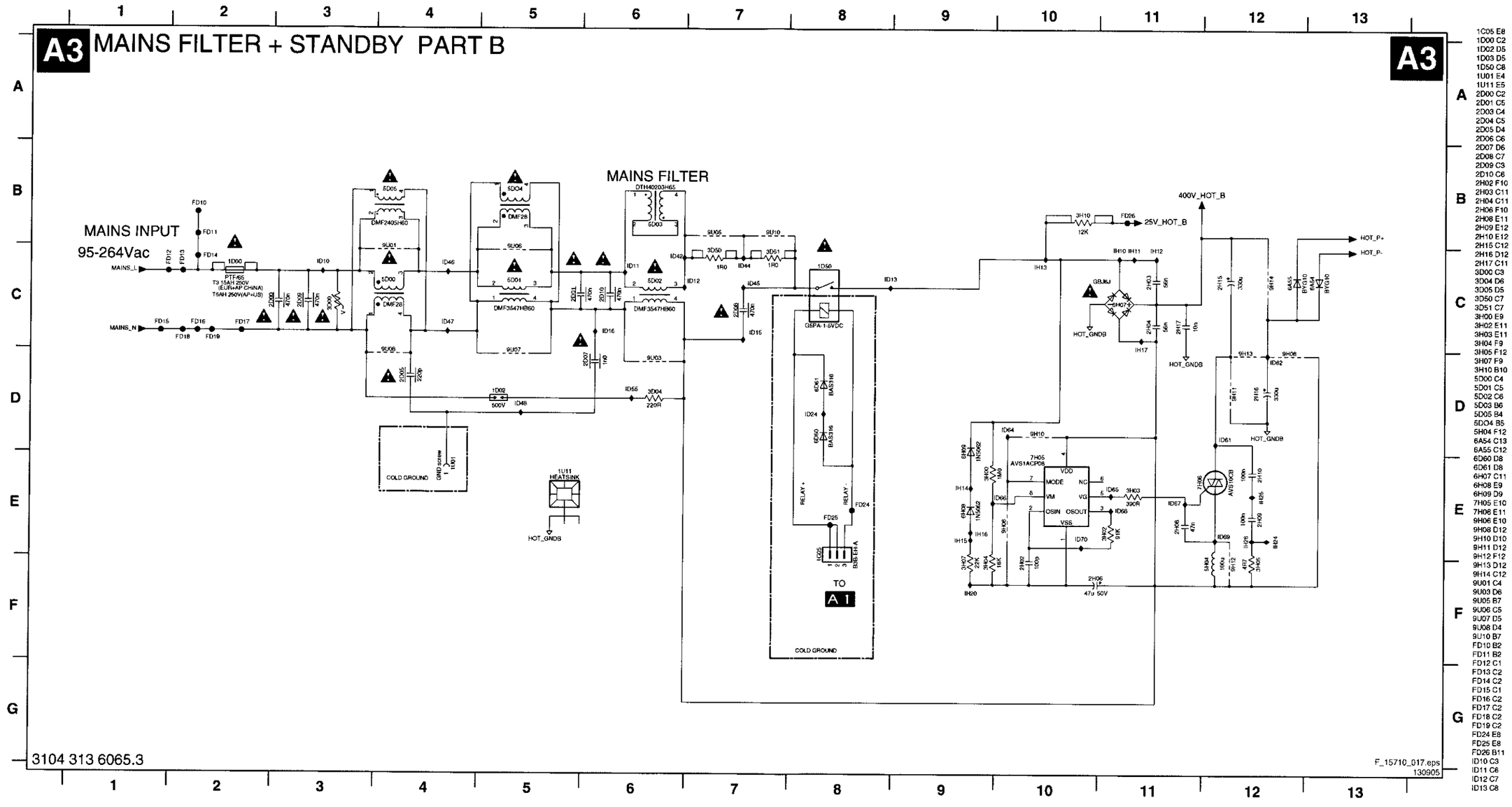

1C05 E8 ID15 C7
1D00 C2 ID16 C6
1D02 D5 ID24 D8
1D03 D5 ID42 C6
1D50 C8 ID44 C7
1U01 E4 ID45 C7
1U11 E5 ID46 C4
2D00 C2 ID47 C4
2D01 C5 ID48 D5
2D03 C4 ID55 D6
2D04 C5 ID61 D12
2D05 D4 ID62 D12
2D06 C6 ID63 D5
2D07 D6 ID64 D10
2D08 C7 ID65 E11
2D09 C3 ID66 E10
2D10 C6 ID67 E11
2H02 F10 ID68 E11
2H03 C11 ID69 E12
2H04 C11 ID70 E10
2H06 F10 IH10 C11
2H08 E11 IH11 C11
2H09 E12 IH12 C11
2H10 E12 IH13 C10
2H15 C12 IH14 E9
2H16 D12 IH15 E9
2H17 C11 IH16 E9
3D00 C3 IH17 C11
3D04 D6 IH20 F9
3D05 D5 IH24 E12
3D50 C7 IH25 E12
3D51 C7 IH26 E12
3H00 E9
3H02 E11
3H03 E11
3H04 F9
3H05 F12
3H07 F9
3H10 B10
5D00 C4
5D01 C5
5D02 C6
5D03 B6
5D05 B4
5DO4 B5
5H04 F12
6A54 C13
6A55 C12
6D60 D8
6D61 D8
6H07 C11
6H08 E9
6H09 D9
7H05 E10
7H06 E11
9H06 E10
9H08 D12
9H10 D10
9H11 D12
9H12 F12
9H13 D12
9H14 C12
9U01 C4
9U03 D6
9U05 B7
9U06 C5
9U07 D5
9U08 D4
9U10 B7
FD10 B2
FD11 B2
FD12 C1
FD13 C2
FD14 C2
FD15 C1
FD16 C2
FD17 C2
FD18 C2
FD19 C2
FD24 E8
FD25 E8
FD26 B11
ID10 C3
ID11 C6
ID12 C7
ID13 C8

LCD Supply (42" - v3): Supply Part B

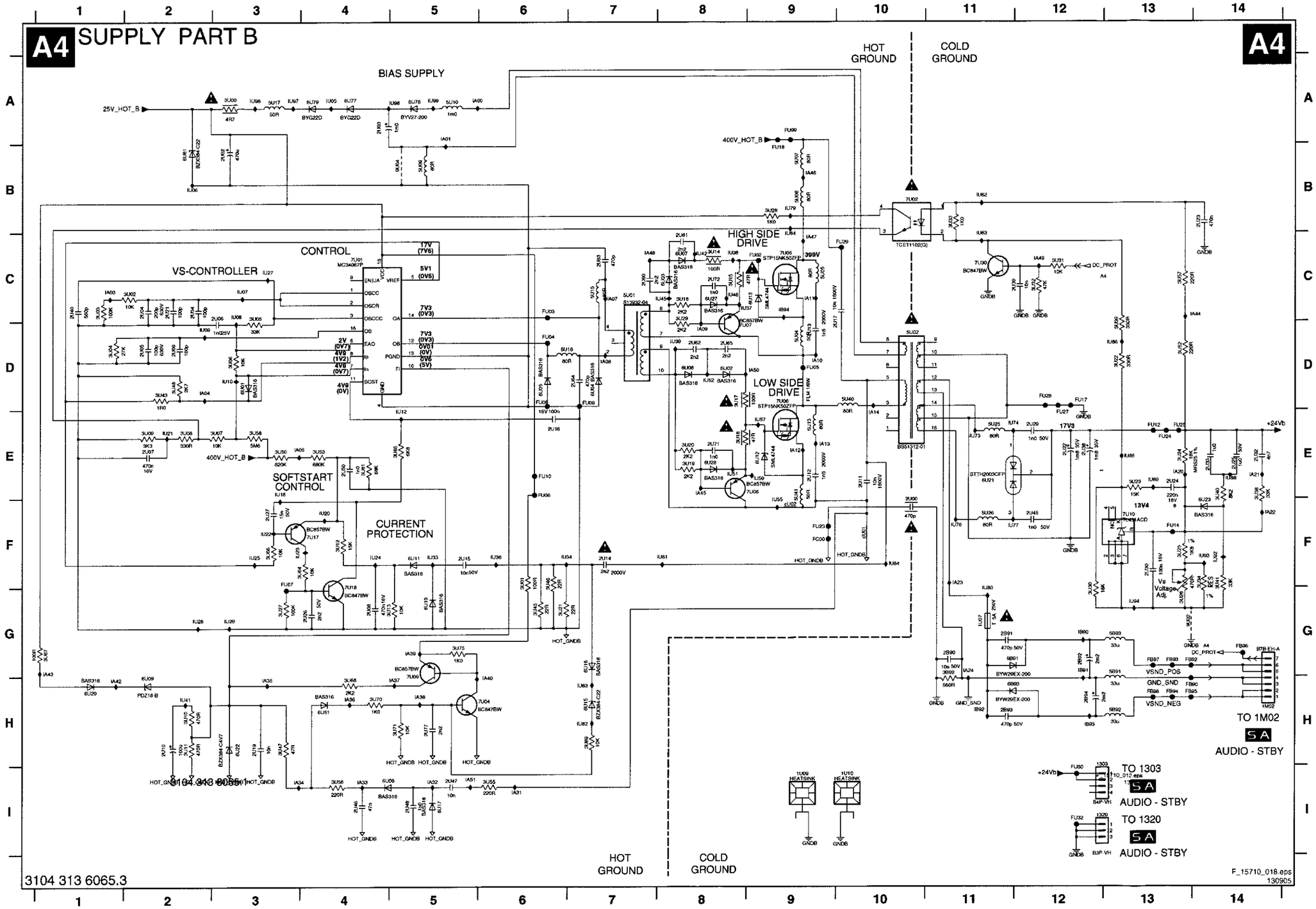

1303 I12	3U70 H4	IA32 I5
1320 I12	3U71 H5	IA33 I4
1M02 H14	3U75 G5	IA34 I3
1U07 G11	3U89 H7	IA35 H3
1U09 I9	5B91 G13	IA36 H4
1U10 I10	5B92 H13	IA37 H5
2B90 G11	5B93 G13	IA38 H5
2B91 G11	5U01 C7	IA39 G5
2B92 G12	5U02 D10	IA40 H6
2B93 H11	5U04 D9	IA42 H1
2B94 H12	5U05 C9	IA43 G1
2U00 F10	5U07 B9	IA44 C14
2U02 B3	5U08 B9	IA45 E8
2U03 A4	5U09 B5	IA46 B9
2U04 C2	5U10 A5	IA47 C9
2U05 D2	5U13 E9	IA48 C7
2U06 C3	5U15 C7	IA49 C12
2U07 E2	5U16 D6	IA50 D9
2U08 G4	5U17 A3	IA51 I5
2U09 D2	5U25 E11	IB90 G12
2U10 H2	5U26 F11	IB91 G12
2U11 E10	5U40 D10	IB92 H11
2U12 E9	5U41 E9	IB93 H12
2U13 D9	6B91 G11	IB94 C9
2U14 F7	6B93 H11	IU05 A4
2U15 F5	6U01 D3	IU06 B2
2U16 E6	6U02 D8	IU07 C3
2U17 D10	6U03 C8	IU08 C3
2U19 H3	6U04 D7	IU09 D2
2U21 C2	6U05 D6	IU10 D3
2U22 E12	6U06 I4	IU12 E5
2U23 B14	6U07 C6	IU18 E3
2U24 E13	6U08 D8	IU20 F4
2U25 E14	6U09 H2	IU21 E2
2U26 G4	6U10 G5	IU22 F3
2U27 F3	6U11 F5	IU23 F3
2U29 E12	6U12 E9	IU24 F4
2U30 F13	6U13 C9	IU25 F3
2U32 E14	6U15 H7	IU27 C3
2U33 E14	6U16 G7	IU28 G2
2U34 C2	6U17 I5	IU29 G3
2U38 E12	6U20 H1	IU33 F5
2U39 C12	6U21 E11	IU34 F6
2U40 C1	6U22 H5	IU36 F6
2U45 F12	6U23 F14	IU37 C8
2U46 I4	6U27 C8	IU38 C8
2U47 I5	6U28 E8	IU39 D8
2U48 I5	6U51 H4	IU41 H2
2U50 E4	6U77 A4	IU42 C8
2U60 C7	6U78 A5	IU45 C8
2U61 D8	6U79 A4	IU46 C8
2U62 D8	6U81 B2	IU51 E8
2U63 C7	7U01 C4	IU52 D8
2U64 D7	7U02 B10	IU55 F9
2U65 D8	7U04 H5	IU57 E9
2U71 E8	7U05 C9	IU59 E9
2U72 C8	7U06 D9	IU62 B11
2U75 H5	7U07 D8	IU63 C11
3B92 G11	7U08 E8	IU64 C9
3U00 A3	7U09 G5	IU73 E11
3U01 F6	7U10 F13	IU74 E11
3U02 C2	7U17 F4	IU76 F11
3U03 C1	7U18 G4	IU77 F11
3U04 D1	7U30 C11	IU79 B9
3U05 C3	9U02 G13	IU80 G11
3U06 D3	9U04 B5	IU81 F8
3U07 E3	FB90 H13	IU82 H7
3U08 E2	FB92 G13	IU83 H7
3U09 E2	FB93 G13	IU84 F10
3U10 H2	FB94 H13	IU85 E13
3U11 H2	FB95 H13	IU86 D13
3U12 F4	FB96 G14	IU88 E14
3U13 G5	FB97 G13	IU89 E13
3U14 C8	FB98 H13	IU92 F14
3U15 C8	FC00 F9	IU93 F14
3U16 C8	FU02 C9	IU94 G13
3U17 D8	FU03 C6	IU95 A3
3U18 E8	FU04 D6	IU97 A3
3U19 E8	FU05 D9	IU98 A5
3U20 E8	FU06 E6	IU99 A5
3U21 G6	FU07 F3	cU01 F10
3U22 D13	FU08 D6	cU02 F9
3U23 E13	FU09 D7	
3U24 E13	FU10 E6	
3U25 F13	FU12 E13	
3U26 G13	FU14 F13	
3U27 G3	FU17 D12	
3U28 B9	FU18 B9	
3U29 C8	FU23 F9	
3U30 G12	FU24 E13	
3U31 C12	FU25 E13	
3U32 C12	FU27 E12	
3U33 B11	FU28 D12	
3U34 F14	FU29 C10	
3U38 E14	FU30 I12	
3U39 D13	FU32 I12	
3U40 E14	FU99 A9	
3U41 F14	IA00 A5	
3U43 D2	IA01 A5	
3U45 G6	IA03 C1	
3U46 F6	IA04 D2	
3U47 H3	IA05 E3	
3U48 D2	IA07 C7	
3U50 E3	IA08 D7	
3U52 D13	IA09 D8	
3U53 E4	IA10 D9	
3U55 I6	IA11 C9	
3U56 I4	IA12 E9	
3U57 C13	IA13 E9	
3U58 E3	IA14 E10	
3U61 E4	IA20 E13	
3U64 F4	IA21 E14	
3U65 E5	IA22 F14	
3U66 F3	IA23 F11	
3U67 G1	IA24 G11	
3U68 H4	IA31 I6	

Layout LCD Supply (42" - v3) (Top Side)

1000 B1	1308 C1	1D00 D1	2002 B8	2020 C11	2405 A3	2808 C5	2D05 D4	2H10 G6	2U11 F8	3014 C7	3402 C1	3805 C5	3H07 E5	3U58 E7	5015 B7	5401 A2	5D01 D3	5U07 E6	5U40 F7	6B91 G10	7006 C8	9003 B4	9082 C4	9097 D6	9H12 F5	9U06 E3	9U55 D8	9U67 A7	9U78 E9	9U88 F3
1001 A2	1309 B11	1D02 F2	2003 B7	2022 B11	2406 B3	2809 D4	2D07 E4	2H15 E5	2U12 G9	3015 C7	3403 C1	3807 B5	3H10 E5	5001 C7	5016 B7	5402 C3	5D02 F3	5U08 E6	5U41 G9	6B93 G11	7805 B5	9004 B11	9088 A10	9098 C4	9H13 E6	9U07 E3	9U56 F10	9U68 B7	9U79 E8	9U90 E2
1010 C10	1400 B1	1M02 F11	2005 A8	2025 A10	2407 B4	2810 D5	2D08 E4	2H16 E6	2U13 G8	3017 D8	3404 B3	3810 B5	3U00 D5	5002 B9	5017 A5	5403 D2	5D03 F2	5U09 E8	6014 A11	6H07 G5	7806 D5	9005 D2	9089 D2	9099 B3	9H14 E6	9U08 E2	9U58 E7	9U69 A8	9U80 E7	9U91 E2
1011 C4	1401 A5	1U01 D3	2010 A8	2033 A11	2408 C3	2815 B4	2D09 E2	2H17 E6	2U14 D8	3018 D7	3405 B3	3D00 D1	3U14 F7	5004 C7	5025 B10	5404 B3	5D05 E2	5U10 E8	6021 B10	6H08 E5	7H05 F6	9006 B2	9090 A10	9808 C6	9H15 F6	9U09 G8	9U59 E5	9U70 A8	9U81 E7	
1303 E11	1402 A3	1U07 F10	2011 C7	2038 B10	2409 B1	2816 B6	2D10 E4	2U00 E9	2U15 F7	3026 A10	3406 D5	3D04 F2	3U15 G7	5005 D7	5026 B10	5405 A2	5D04 E3	5U13 G9	6044 D10	6H09 E5	7H06 G6	9007 B3	9091 A9	9811 C6	9H16 G5	9U10 F4	9U60 D4	9U71 B7	9U82 F7	
1304 B11	1403 A3	1U09 E10	2012 D9	2401 B4	2503 A5	2B92 F10	2H04 F5	2U02 E8	2U22 F11	3050 A7	3407 D6	3D50 G2	3U17 G8	5007 A6	5027 C9	5804 C5	5H04 F5	5U15 E7	6078 B7	6U21 E10	7U01 E7	9008 A1	9092 B8	9812 C5	9H17 C1	9U50 E3	9U61 D5	9U72 B7	9U83 E7	
1305 A4	1450 B4	1U10 G10	2013 C7	2402 A2	2803 C4	2B94 F10	2H06 F5	2U04 D7	2U23 D11	3053 A7	3450 C2	3D51 G4	3U18 G8	5008 A6	5028 C10	5B91 F11	5U01 F7	5U16 E7	6506 B4	6U78 E7	7U02 D9	9009 A5	9093 A8	9813 C6	9U01 E1	9U51 E9	9U62 D5	9U73 B7	9U84 G4	
1306 A5	1B06 A4	1U11 G4	2014 A9	2403 A3	2804 C5	2D00 E2	2H08 F5	2U10 D8	2U38 E10	3058 A7	3451 C3	3H00 E5	3U26 D10	5009 B8	5040 C7	5B92 F11	5U02 F9	5U17 D6	6807 C4	7001 A7	7U05 G7	9010 B11	9094 B7	9814 B6	9U03 E4	9U52 E5	9U63 B11	9U74 D7	9U85 E6	
1307 D5	1C05 D4	2000 A9	2017 B7	2404 A3	2806 B5	2D01 E4	2H09 G5	2U10 D8	3000 A6	3401 C1	3803 C5	3H05 G4	3U53 D6	5013 D8	5400 A1	5D00 D1	5U05 G8	5U26 E10	6809 B5	7005 D7	9001 A1	9080 A8	9096 C7	9H11 F6	9U05 G3	9U54 G7	9U66 D10	9U77 E9	9U87 B9	

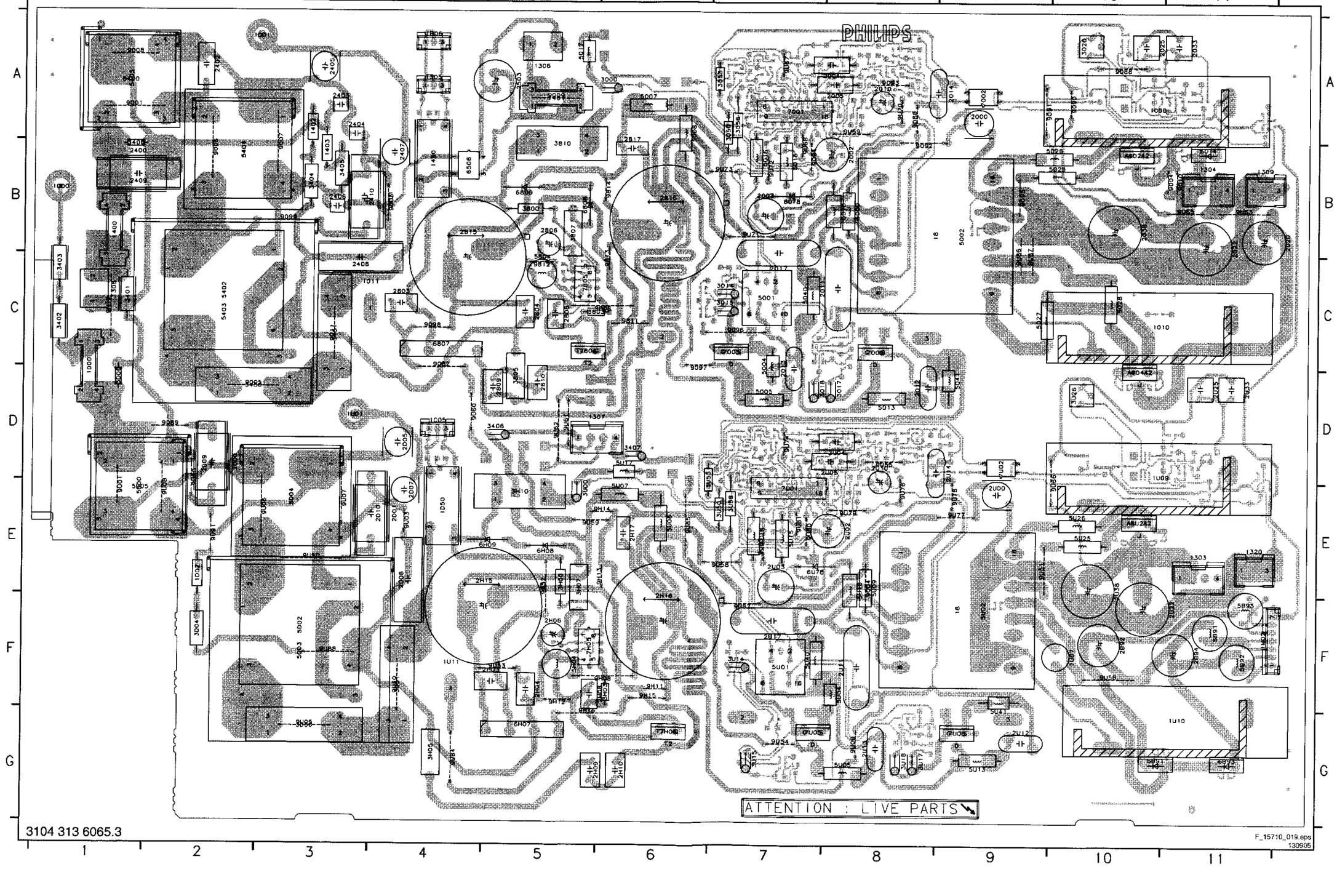

Layout LCD Supply (42" - v3) (Overview Bottom Side)

2006 A5 2024 A2 2035 B1 2060 C5 2290 B3 2U09 D4 2U29 E2 2U48 E4 2U72 G5 3008 A5 3021 A4 3031 A1 3045 A4 3064 A5 3292 B3 3U02 D5 3U11 D4 3U24 D1 3U34 D1 3U48 D5 3U67 E4 6004 B5 6013 C5 6051 A4 6158 C6 6U02 G3 6U11 D5 6U27 G5 7009 A4 7U10 D2 9H10 F7
2007 A5 2026 A5 2039 A1 2061 C5 2802 C7 2U15 D4 2U30 D1 2U50 D5 2U77 D4 3009 A5 3022 A1 3032 A1 3046 A4 3065 A5 3802 C7 3U03 D4 3U12 D5 3U25 D1 3U38 D1 3U52 D2 3U68 D4 6005 A5 6015 A4 6077 B5 6159 D6 6U03 G5 6U12 F3 6U28 G4 7010 A2 7U17 D5 9U02 D2
2008 A5 2027 A5 2040 A5 2062 C5 2B90 F3 2U16 E5 2U32 D1 2U60 G5 3001 A4 3010 A4 3023 A2 3033 A3 3047 A4 3066 A5 3804 C7 3U04 E4 3U13 D5 3U27 D5 3U39 E1 3U55 D4 3U70 D4 6006 A4 6016 A4 6079 A6 6460 A8 6U04 E5 6U13 F5 6U51 D4 7017 A5 7U18 D5 9U57 D1
2009 A4 2028 D2 2044 D2 2063 C5 2B91 G1 2U19 D4 2U34 D4 2U61 F5 3002 A5 3011 A4 3024 A2 3034 A1 3048 A5 3067 A4 3806 C7 3U05 D5 3U16 G5 3U28 D3 3U40 D1 3U56 D4 3U71 D4 6007 C5 6017 A4 6080 A6 6461 A8 6U05 E5 6U15 D4 6U77 E4 7018 A5 7U30 E1
2015 A4 2029 B2 2045 B2 2064 C5 2B93 G1 2U21 D4 2U39 D1 2U62 G4 3003 A4 3012 A5 3025 A1 3037 A2 3052 A2 3068 A4 3999 C2 3U06 D5 3U19 G4 3U29 G5 3U41 D1 3U57 D2 3U75 D4 6008 C5 6020 A4 6081 B4 6A54 D7 6U06 D4 6U16 D3 6U79 D6 7030 A1 9002 A2
2016 A5 2030 A1 2046 A4 2065 C4 2H02 F7 2U23 D2 2U40 E5 2U63 F5 3004 A4 3013 A5 3027 A5 3038 A1 3055 A4 3070 A4 3B92 F3 3U07 E5 3U20 G4 3U30 D1 3U43 D5 3U61 D5 3U89 D3 6009 A4 6022 A4 6154 D6 6A55 D7 6U07 F5 6U17 E4 6U81 E4 7U04 D4 9085 A1
2019 A4 2031 A2 2047 A4 2071 C4 2U06 E5 2U24 D1 2U45 E2 2U64 F5 3005 A5 3016 C6 3028 A4 3040 A1 3056 A4 3071 A4 3H02 F7 3U08 E5 3U21 D4 3U31 E1 3U45 D5 3U64 D5 6001 A5 6010 A5 6023 A1 6155 D6 6D60 D8 6U08 G4 6U20 E4 7004 A4 7U07 G5 9806 C7
2021 A4 2032 A2 2048 A4 2072 C6 2U07 E5 2U26 D5 2U46 D4 2U65 G4 3006 A5 3019 C4 3029 C6 3041 A1 3057 A2 3075 A4 3H04 F7 3U09 E5 3U22 E1 3U32 D1 3U46 D5 3U65 D5 6002 C4 6011 A5 6027 C6 6156 D7 6D61 D8 6U09 D4 6U22 D4 7007 C6 7U08 G4 9810 C7
2023 A2 2034 A4 2050 A5 2077 A4 2U08 D5 2U27 D5 2U47 D4 2U71 G4 3007 A5 3020 C4 3030 A2 3043 A5 3061 A5 3089 A4 3U01 D4 3U10 E4 3U23 D1 3U33 D3 3U47 D4 3U66 D5 6003 C5 6012 C4 6028 C4 6157 E7 6U01 D5 6U10 D4 6U23 D1 7008 C5 7U09 D4 9H06 F7

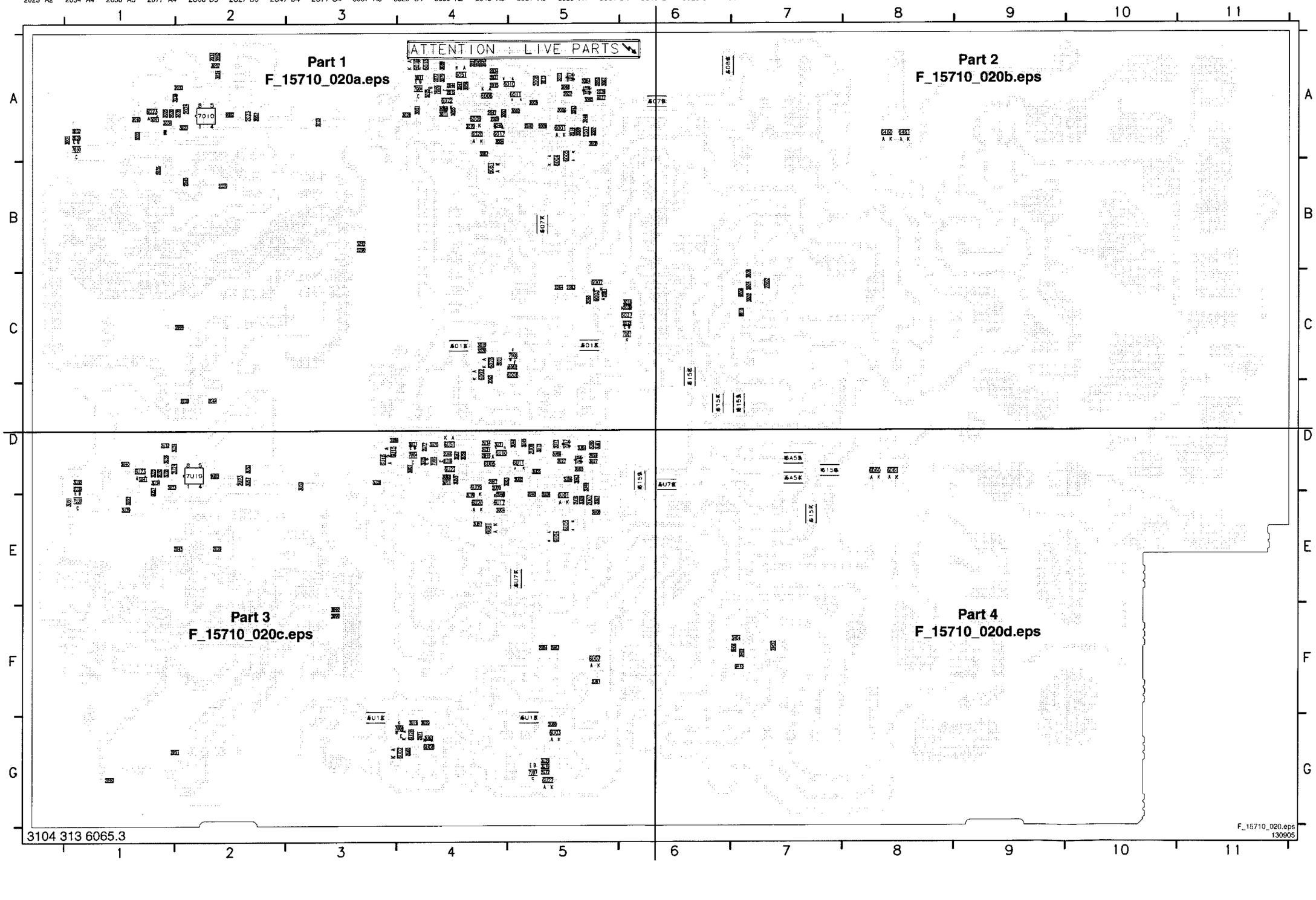

3104 313 6065.3

Layout LCD Supply (42" - v3) (Part 1 Bottom Side)

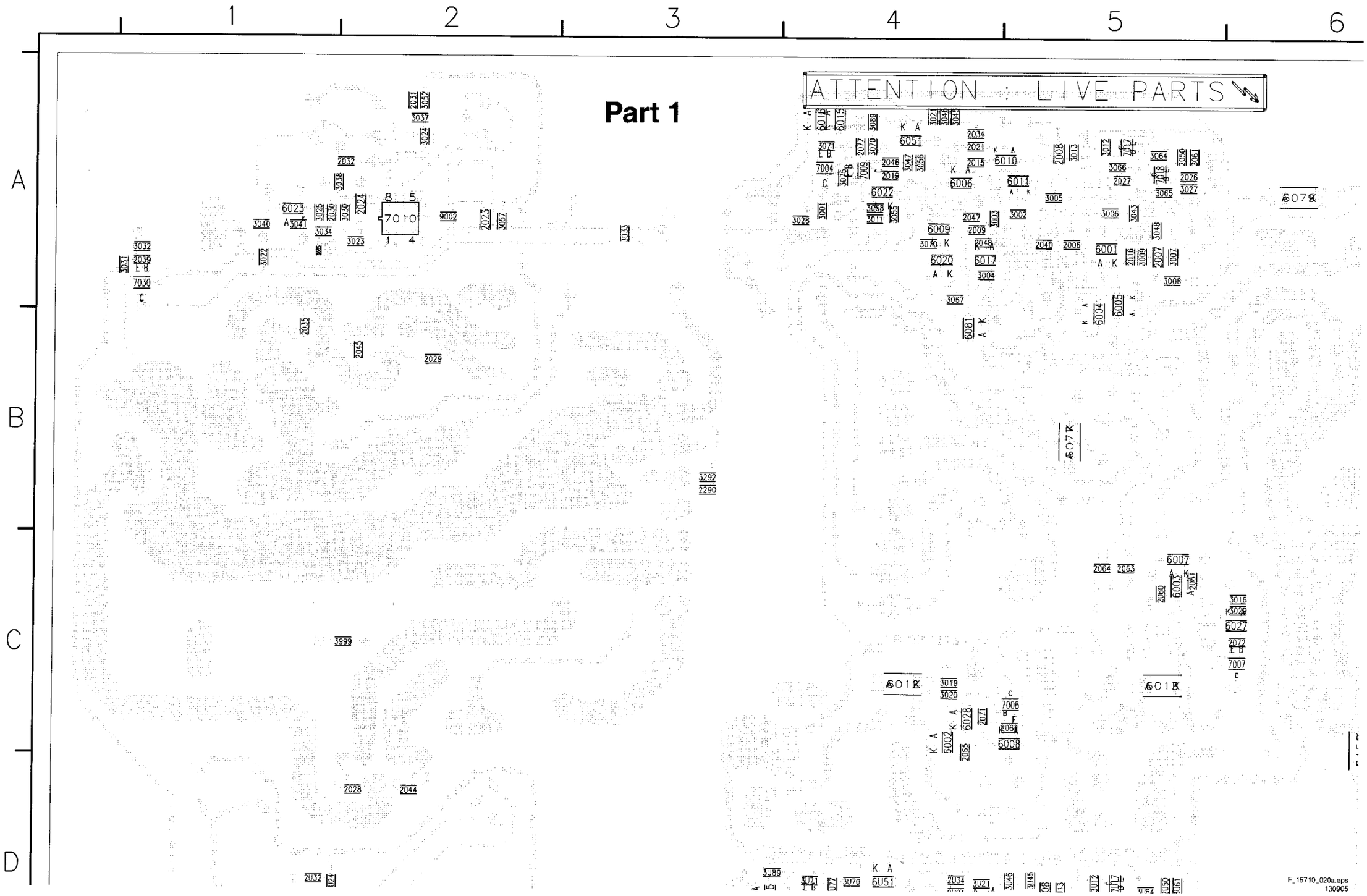

Layout LCD Supply (42" - v3) (Part 2 Bottom Side)

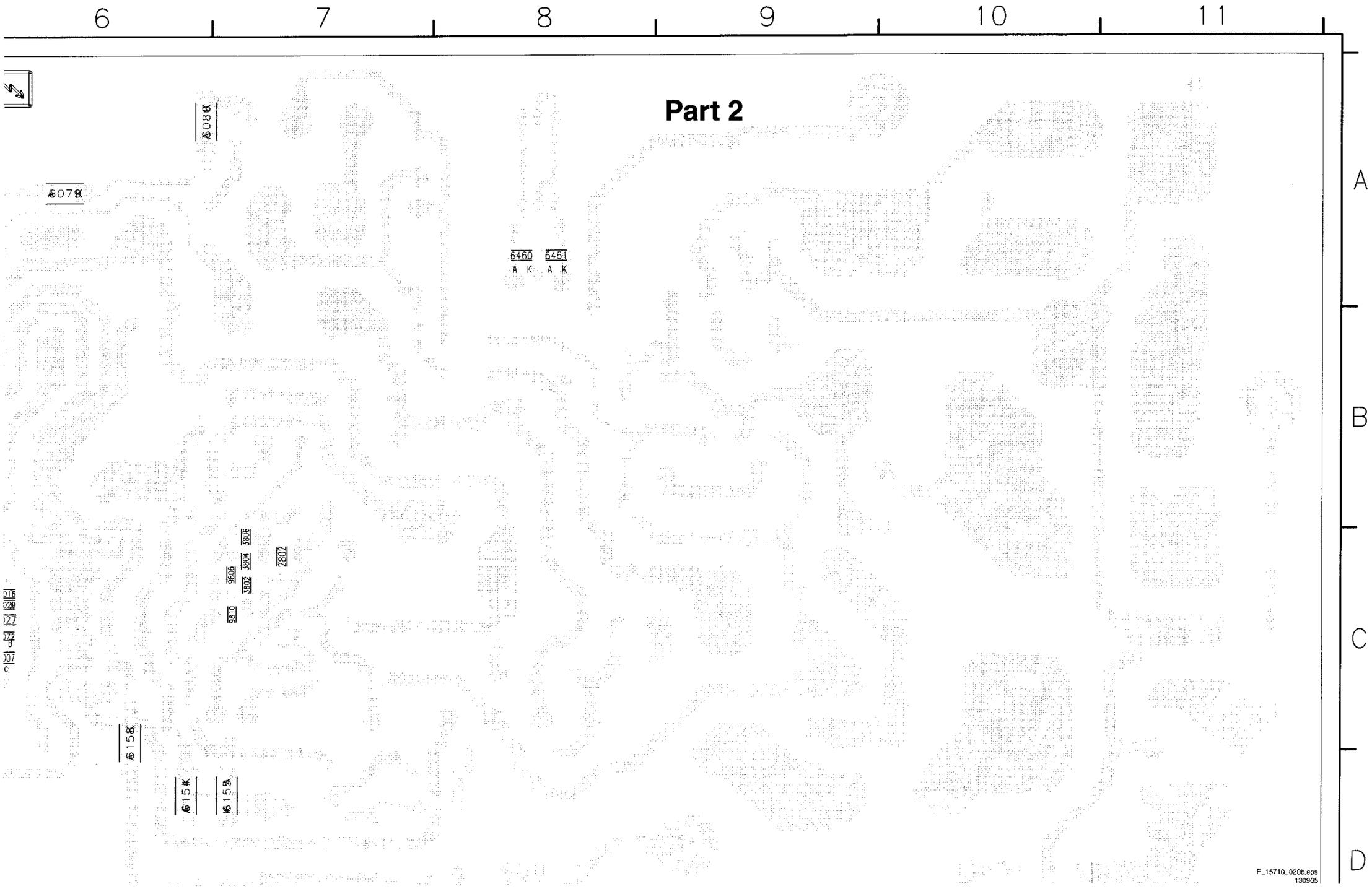

Layout LCD Supply (42" - v3) (Part 3 Bottom Side)

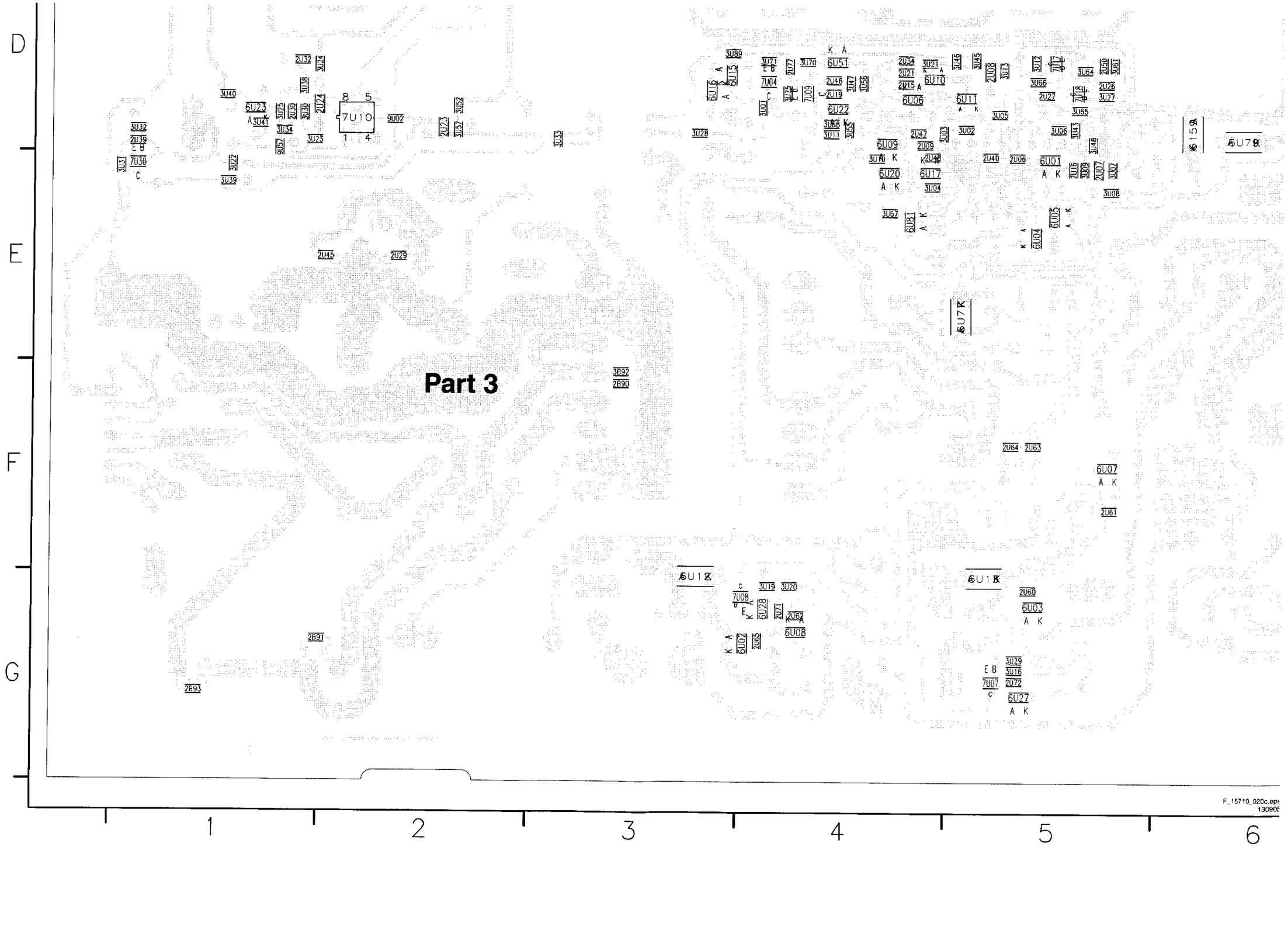

Layout LCD Supply (42" - v3) (Part 4 Bottom Side)

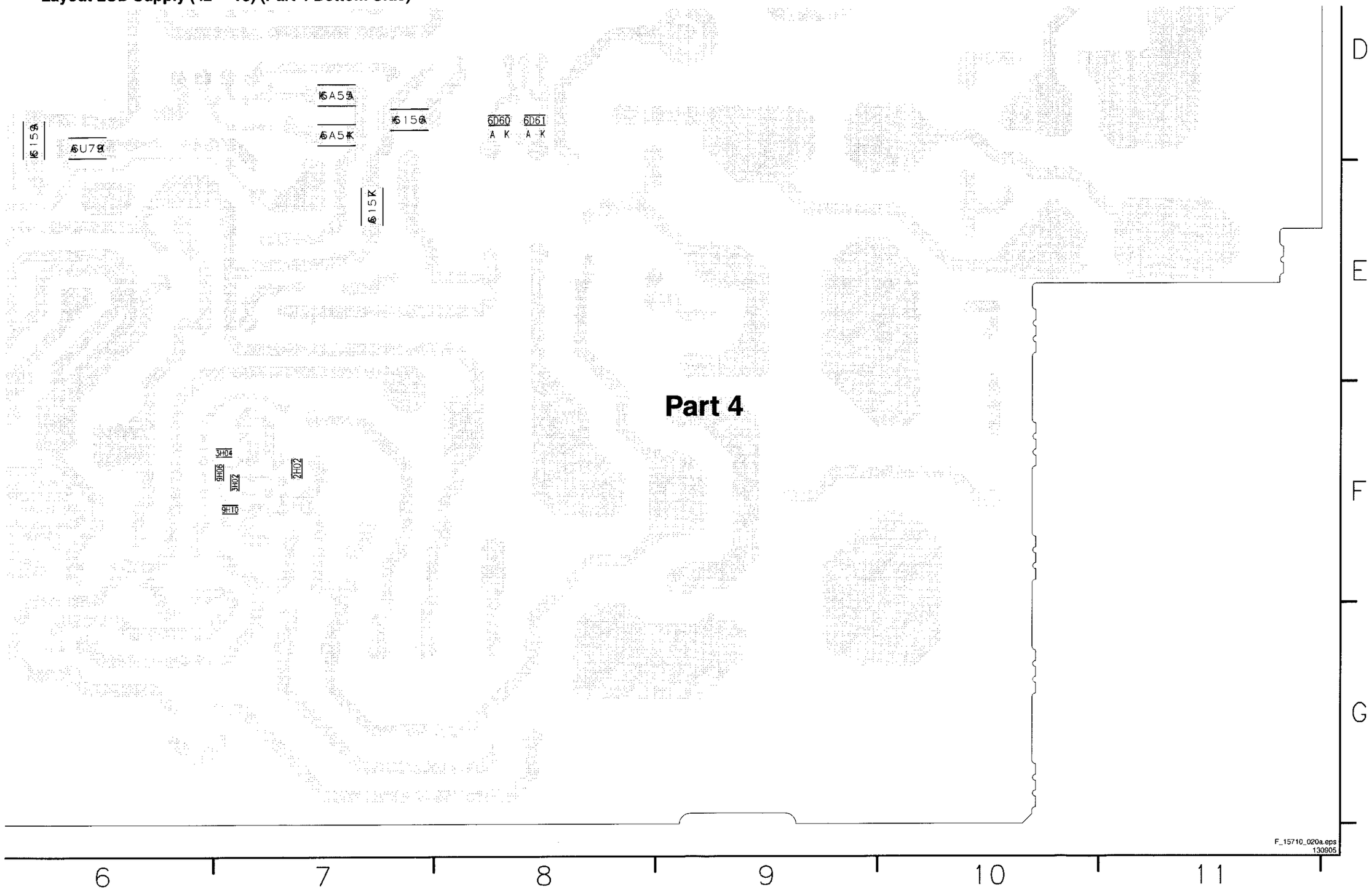

Part 4

Interface Panel DC / DC

AB INTERFACE PANEL

12V/5V CONVERTER

TO 1D40 B

SSB

TO DISPLAY

8204 000 8423.4

F_15710_021.eps 130905

1D00 A6	3D59 D9	ID70 E4
1D40 B9	3D60 D7	ID71 C6
1D55 D9	3D62 E8	ID72 D5
2D10 B6	5D11 C6	ID73 D5
2D30 B5	5D12 E7	ID74 D5
2D31 B4	5D13 E7	ID75 D5
2D32 B5	5D14 B6	ID76 E5
2D33 B6	6D01 B4	ID77 D5
2D34 B6	6D02 B5	ID78 D6
2D35 C2	6D03 F6	ID79 B2
2D36 C2	6D04 F6	ID80 B3
2D37 C6	6D06 B3	ID81 D2
2D38 C7	6D62 F8	ID82 C7
2D39 C2	7D04 C3	ID83 D7
2D40 C5	7D05-1 D5	ID84 D7
2D41 C2	7D05-2 E5	
2D42 D6	7D06-1 D2	
2D43 D6	7D06-2 F5	
2D44 D6	7D08-1 A2	
2D45 E2	7D08-2 A4	
2D46 E5	7D09 A1	
2D47 E5	7D10-1 F1	
2D48 E7	7D10-2 D1	
2D49 D6	9D81 A7	
2D50 E1	9D82 A7	
2D51 D1	9D83 F5	
2D52 C8	FD20 C6	
2D53 C8	FD21 D3	
2D54 C8	FD22 B9	
2D55 C9	FD23 E2	
2D56 D5	FD24 F7	
2D57 D2	FD25 B9	
2D58 D8	FD26 B9	
2D59 D8	FD27 D9	
2D60 D7	FD28 D9	
2D61 C9	FD29 A8	
2D62 F8	FD30 A9	
3999 A9	FD55 D9	
3D20 A4	FD62 F9	
3D21 A3	ID30 D3	
3D22 B2	ID31 C2	
3D23 A3	ID32 C4	
3D24 B2	ID33 C5	
3D25 B2	ID34 C2	
3D26 B4	ID35 D6	
3D27 C7	ID36 D6	
3D28 C5	ID37 E5	
3D29 D2	ID38 E6	
3D30 D5	ID39 E4	
3D31 D6	ID40 E5	
3D32 E6	ID41 A4	
3D33 E2	ID42 A4	
3D34 E5	ID43 A2	
3D35 E6	ID44 B4	
3D36 E5	ID45 D3	
3D37 E6	ID46 E1	
3D38 F5	ID47 E1	
3D39 F6	ID48 E1	
3D40 F6	ID49 F2	
3D41 E2	ID50 A1	
3D42 A5	ID51 A4	
3D43 B4	ID52 C4	
3D44 F2	ID53 E5	
3D45 F2	ID54 F5	
3D46 F2	ID55 F6	
3D47 E1	ID56 A2	
3D48 E1	ID57 F1	
3D49 D1	ID58 B4	
3D50 A1	ID59 C5	
3D51 B1	ID60 D5	
3D52 D2	ID61 E5	
3D53 D5	ID62 D5	
3D54 E6	ID63 B6	
3D55 D8	ID64 C7	
3D56 D8	ID65 F6	
3D57 D8	ID68 C9	
3D58 D8	ID69 E4	

Layout Interface Panel DC / DC

1D00 --	2D33 --	2D40 --	2D47 --	2D54 --	2D61 --	3D24 --	3D31 --	3D38 --	3D45 --	3D52 --	3D59 --	6D01 --	7D05 --	9D83 --
1D40 --	2D34 --	2D41 --	2D48 --	2D55 --	2D62 --	3D25 --	3D32 --	3D39 --	3D46 --	3D53 --	3D60 --	6D02 --	7D06 --	
1D55 --	2D35 --	2D42 --	2D49 --	2D56 --	3999 --	3D26 --	3D33 --	3D40 --	3D47 --	3D54 --	3D62 --	6D03 --	7D08 --	
2D10 --	2D36 --	2D43 --	2D50 --	2D57 --	3D20 --	3D27 --	3D34 --	3D41 --	3D48 --	3D55 --	5D11 --	6D04 --	7D09 --	
2D30 --	2D37 --	2D44 --	2D51 --	2D58 --	3D21 --	3D28 --	3D35 --	3D42 --	3D49 --	3D56 --	5D12 --	6D06 --	7D10 --	
2D31 --	2D38 --	2D45 --	2D52 --	2D59 --	3D22 --	3D29 --	3D36 --	3D43 --	3D50 --	3D57 --	5D13 --	6D62 --	9D81 --	
2D32 --	2D39 --	2D46 --	2D53 --	2D60 --	3D23 --	3D30 --	3D37 --	3D44 --	3D51 --	3D58 --	5D14 --	7D04 --	9D82 --	

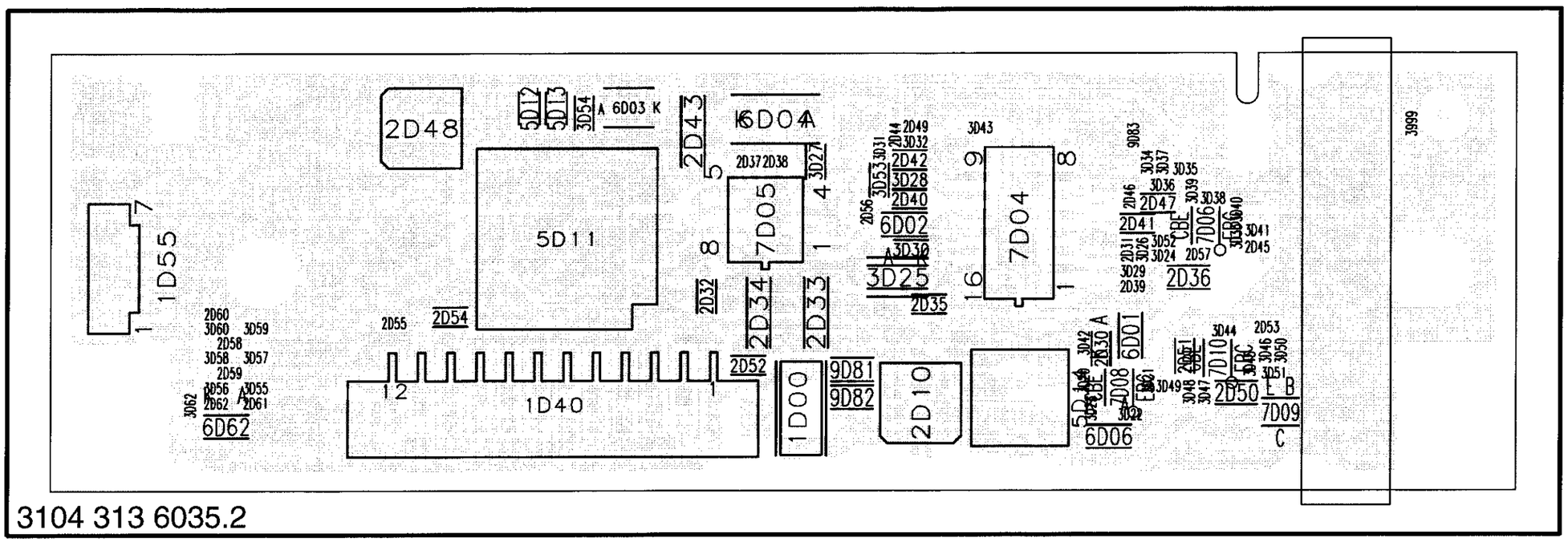

3104 313 6035.2

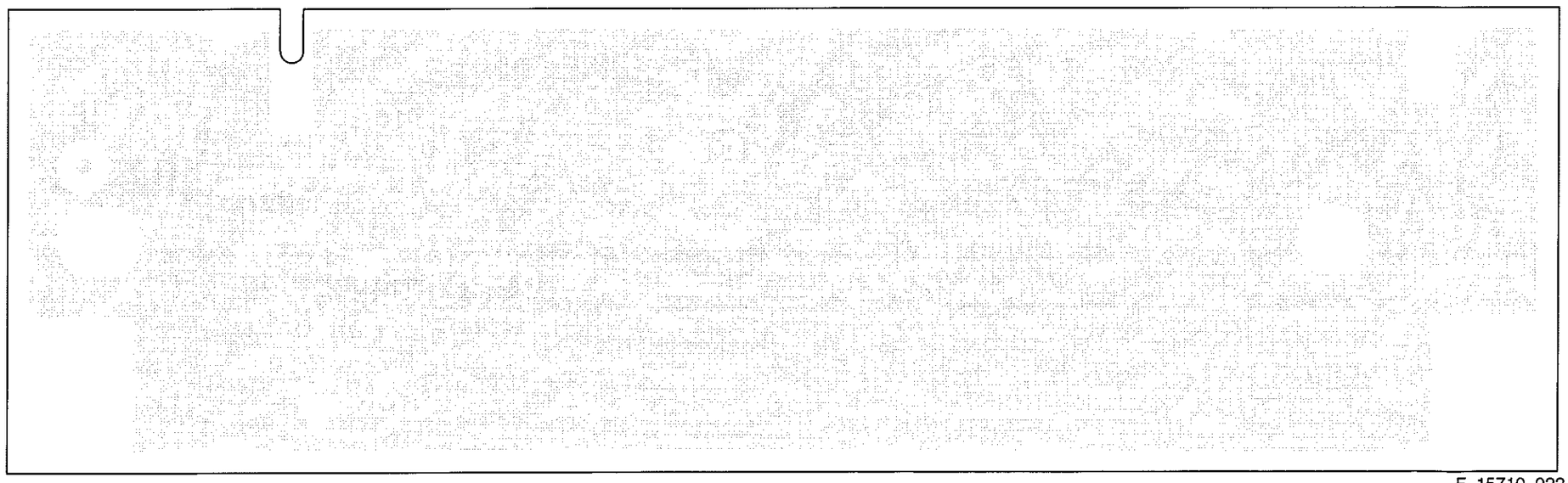

F_15710_022.eps
130905

3104 313 6035.2

Ambi Light Panel

1004 D1	2001 A2	2010 C6	2040 C7	2070 D7	3007 D7	3016 C2	3026 D2	5007 A8	6004 D6	7002 A3	7017-2 D7	F002 C4	F011 E1	F020 B2	F029 C10	F038 C7	F050 B5	I006 B5
1010 A2	2002 A3	2011 B6	2041 C8	2071 D8	3008 C6	3017 B4	3027 D2	5008 A8	6005 D5	7009 B5	7018 A5	F003 C4	F012 E1	F021 B1	F030 E10	F040 B7	F060 D5	I007 A6
1050 C4	2003 C2	2012 B6	2042 C8	2072 D8	3009 C6	3018 A4	3028 C2	5014 A9	6006 B6	7010 C5	7019 B5	F004 C4	F013 E1	F022 B1	F031 E10	F041 B7	F098 E4	I008 A6
1M08 A1	2004 D2	2020 A7	2050 C7	3001 C1	3010 C7	3019 A4	3029 A4	5015 B9	6007 B6	7011 E5	7020 D5	F005 C2	F014 E1	F023 A2	F032 E9	F042 A7	F099 E4	I009 B6
1M10 B1	2005 D4	2021 A8	2051 C8	3002 D1	3011 B7	3020 A4	3030 B4	5016 C9	6008 C6	7015-1 A7	A001 E10	F006 D2	F015 D1	F024 A2	F033 E9	F043 A7	I001 A2	I010 C6
1M11 B10	2006 D4	2022 A8	2052 C8	3003 D4	3012 B6	3022 E2	3031 C5	6000 A6	6009 C6	7015-2 A7	A002 B10	F007 E2	F016 C1	F025 A1	F034 E7	F045 B5	I002 C2	I011 D6
1M12 E10	2007 E6	2030 B7	2060 D7	3004 E6	3013 B6	3023 E2	3042 E8	6001 B6	6010 E6	7016-1 C7	A003 A10	F008 E1	F017 C1	F026 A3	F035 D7	F046 C5	I003 D2	I012 D6
1M48 C1	2008 E6	2031 B8	2061 D8	3005 E6	3014 B7	3024 D4	3999 E4	6002 C6	6011 E6	7016-2 C7	A004 A10	F009 E1	F018 B2	F027 A10	F036 D7	F047 D5	I004 D5	
1M49 E1	2009 C6	2032 B8	2062 D8	3006 D7	3015 A7	3025 C4	5002 A9	6003 C6	7001 C3	7017-1 D7	F001 C4	F010 E1	F019 B2	F028 B10	F037 C7	F048 A5	I005 C5	

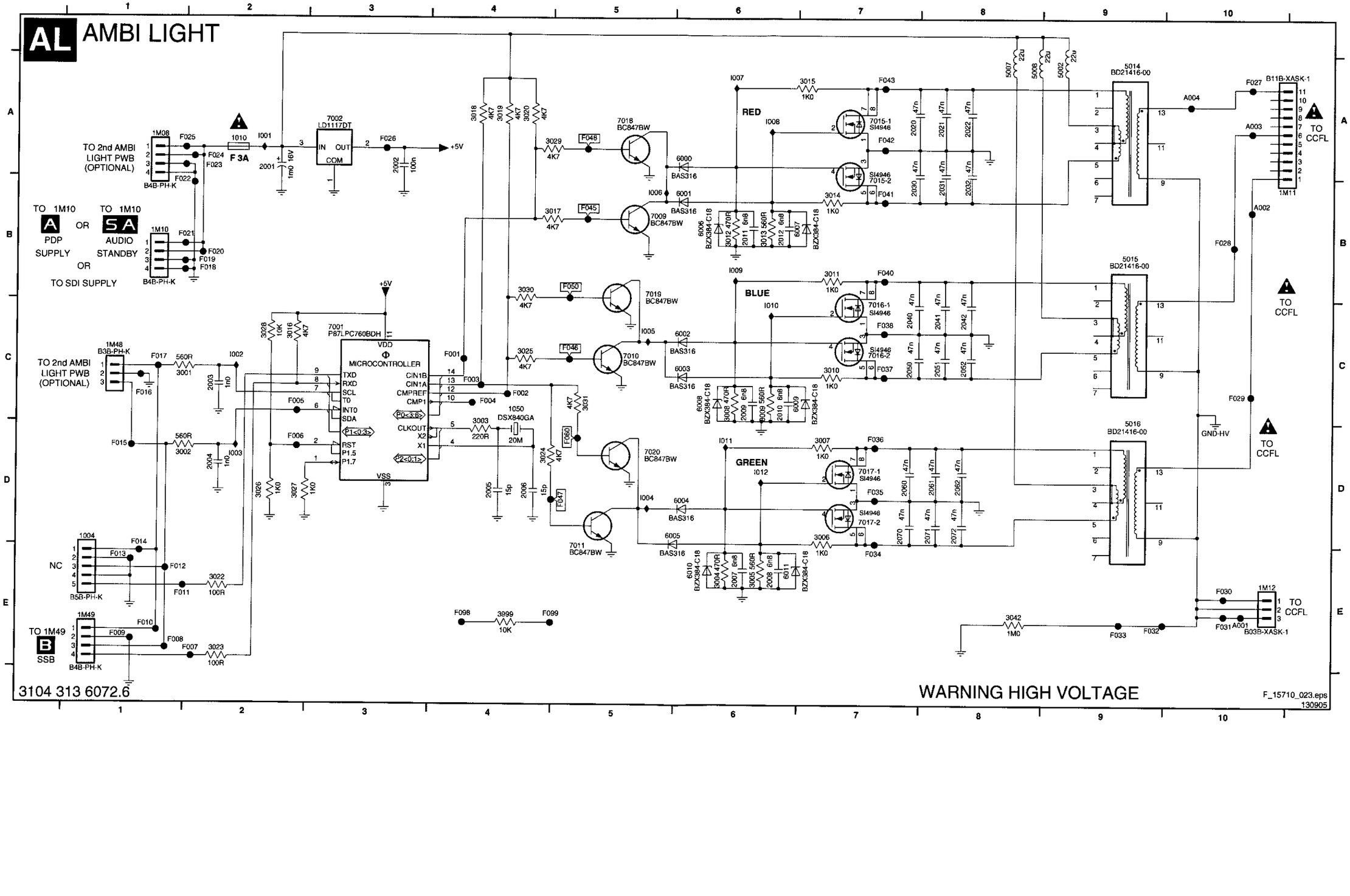

Layout Ambi Light Panel (Top Side)

1004	B2	1M48	B2	2006	B2	2020	A2	2041	A1	2062	A1	3004	B1	3011	B2	3018	B2	3026	B2	3999	B1	6000	B2	6007	B2	7009	B2	7019	B2
1010	B1	1M49	B2	2007	B1	2021	A2	2042	A2	2070	A1	3005	B1	3012	B2	3019	B2	3027	B2	5002	B2	6001	B2	6008	B2	7010	B2	7020	B1
1050	B2	2001	B1	2008	B1	2022	A2	2050	A2	2071	A1	3006	B1	3013	B2	3020	B2	3028	B2	5007	B1	6002	B2	6009	B2	7011	B1		
1M08	B1	2002	B2	2009	B2	2030	A2	2051	A2	2072	A1	3007	B1	3014	B2	3022	B2	3029	B2	5008	B1	6003	B2	6010	B1	7015	B2		
1M10	B1	2003	B2	2010	B2	2031	A2	2052	A2	3001	B2	3008	B2	3015	B2	3023	B2	3030	B2	5014	A2	6004	B1	6011	B1	7016	B2		
1M11	A2	2004	B2	2011	B2	2032	A2	2060	A1	3002	B2	3009	B2	3016	B2	3024	B2	3031	B2	5015	A1	6005	B1	7001	B2	7017	B1		
1M12	A1	2005	B2	2012	B2	2040	A1	2061	A1	3003	B2	3010	B2	3017	B2	3025	B2	3042	A1	5016	A1	6006	B2	7002	B2	7018	B2		

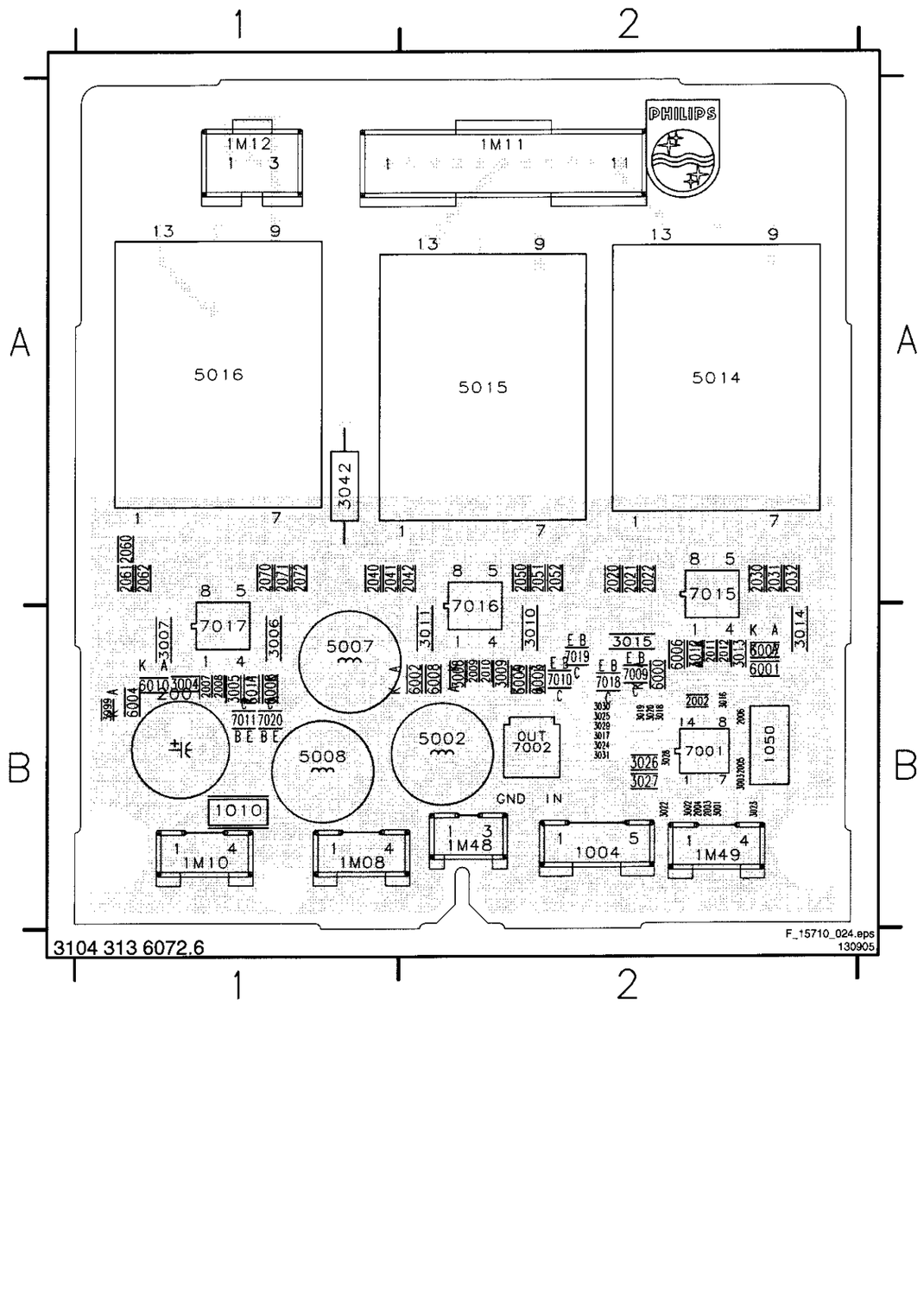

Layout Ambi Light Panel (Bottom Side)

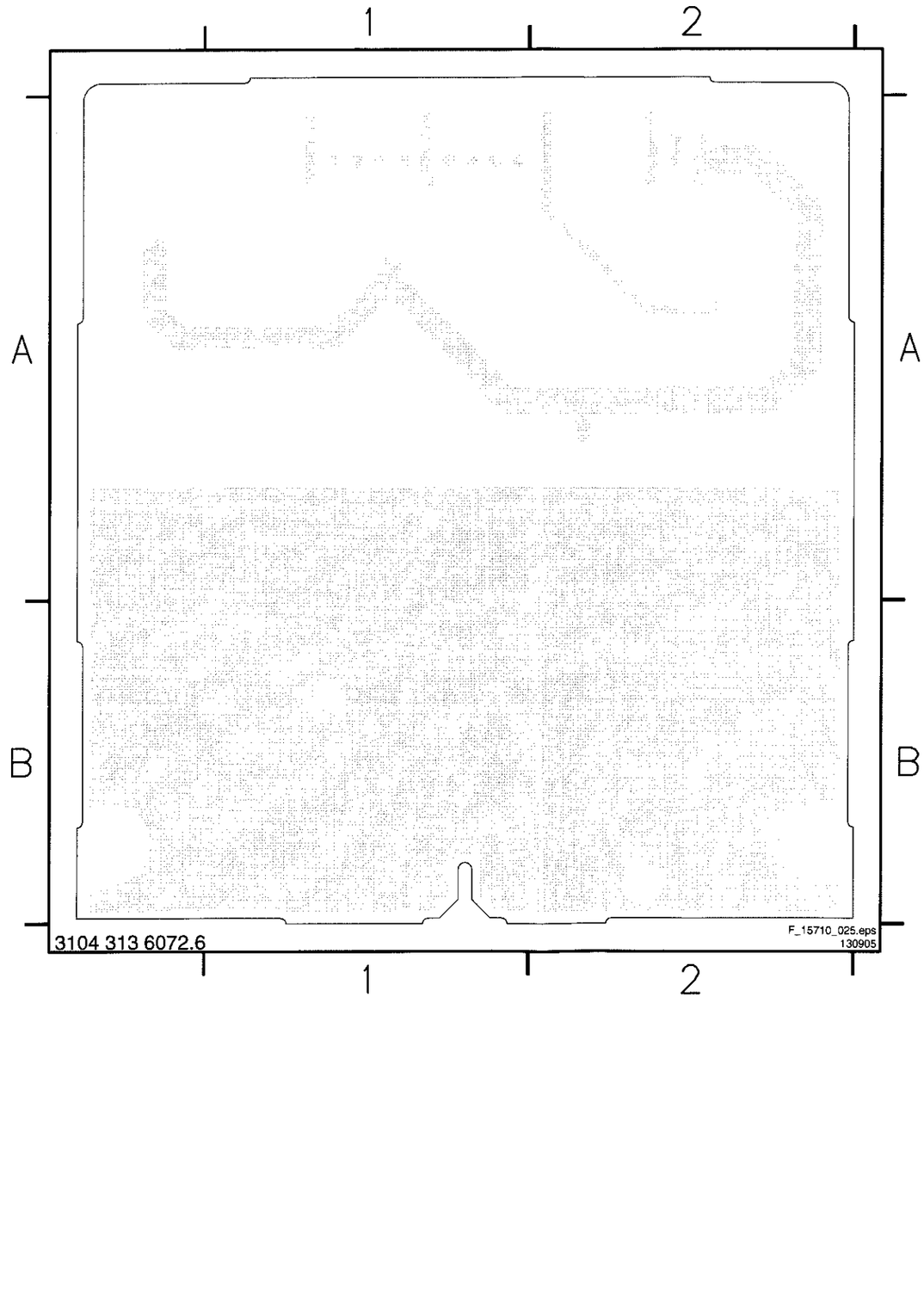

SSB: DC / DC

B1 DC/DC
B1
+5V2S SWITCH (Reserved)
12V SWITCH
12V/3V3 CONVERTOR
12V/2V5 CONVERTOR
12V/1V2 CONVERTOR
VTUN GENERATOR (Reserved)
12V UNDER-VOLTAGE DETECTION
+2V5D STABILIZER
8204 000 8362.8
F_15710_026.eps 130905

SSB: Tuner: Main

1T03 A5	2T03 B2	2T10 C7	2T18 B3	2T23 A10	2T28 E6	3T09 D7	3T18 D3	3T23 B9	3T27 D4	5T04 B4	5T11 D7	6T03 E4	7T03 E2	9T01 E1	9T07 B9	FT01 C3	IT02 D8	IT06 E1	IT13 C7	IT17 E10	IT24 B4	IT28 A9
1T04 B4	2T04 D7	2T11 E5	2T20 E5	2T25 D5	3T04 C2	3T12 D4	3T19 E3	3T24 A9	3T28 E5	5T05 C3	5T12 A9	6T06 E2	7T04 D3	9T02 A3	9T10 D5	FT02 B5	IT03 B3	IT07 D3	IT14 C7	IT18 E10	IT25 A8	IT29 A9
2T01 C2	2T05 D6	2T12 B1	2T21 A8	2T26 E6	3T06 C2	3T16 D2	3T21 A8	3T25 B9	3T29 E5	5T06 C3	6T01 C2	6T07 D3	7T06 A9	9T05 E9	9T11 C6	FT04 C6	IT04 B1	IT09 E8	IT15 D3	IT20 E2	IT26 A8	IT30 E5
2T02 E4	2T06 B3	2T13 D7	2T22 A10	2T27 E6	3T07 D7	3T17 D3	3T22 B8	3T26 D4	5T01 B3	5T10 D7	6T02 D4	7T02 A2	7T10 E5	9T06 E9	AT01 D10	FT05 B4	IT05 D4	IT12 C6	IT16 D2	IT21 D3	IT27 A9	

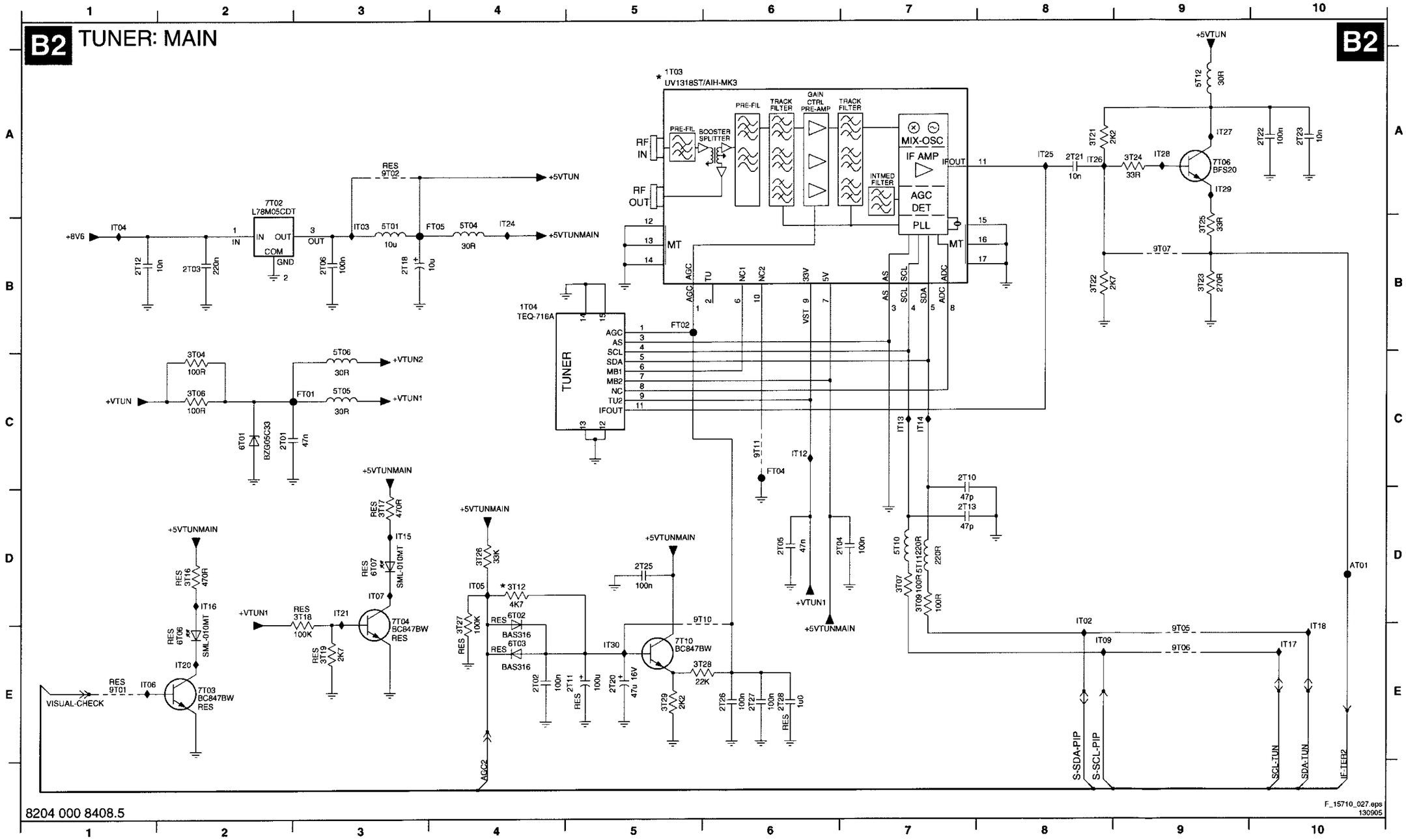

8204 000 8408.5

F_15710_027.eps
130905

SSB: Tuner: Sub

1W02 A4	2W07 C5	2W16 D5	2W20 E4	2W24 D3	3W14 B6	3W18 C7	3W23 E3	5W06 B7	7W10 D3	AW02 E7	IW11 B5	IW15 C1	IW19 E5	IW23 C6
1W03 B3	2W08 C5	2W17 C6	2W21 E4	3W03 E5	3W15 D6	3W20 D2	5W03 C1	6T05 D2	9W01 C6	FW03 C4	IW12 B5	IW16 D4	IW20 E4	IW24 C6
2W03 E2	2W14 E2	2W18 B7	2W22 E4	3W05 E5	3W16 D7	3W21 D2	5W04 D5	6W04 D2	9W10 C5	IW04 D2	IW13 C5	IW17 D5	IW21 B7	IW25 C7
2W06 C4	2W15 D5	2W19 B7	2W23 E3	3W13 D2	3W17 C6	3W22 E4	5W05 D5	7W01 C7	9W11 D3	IW10 B4	IW14 C1	IW18 D4	IW22 C6	IW26 D2

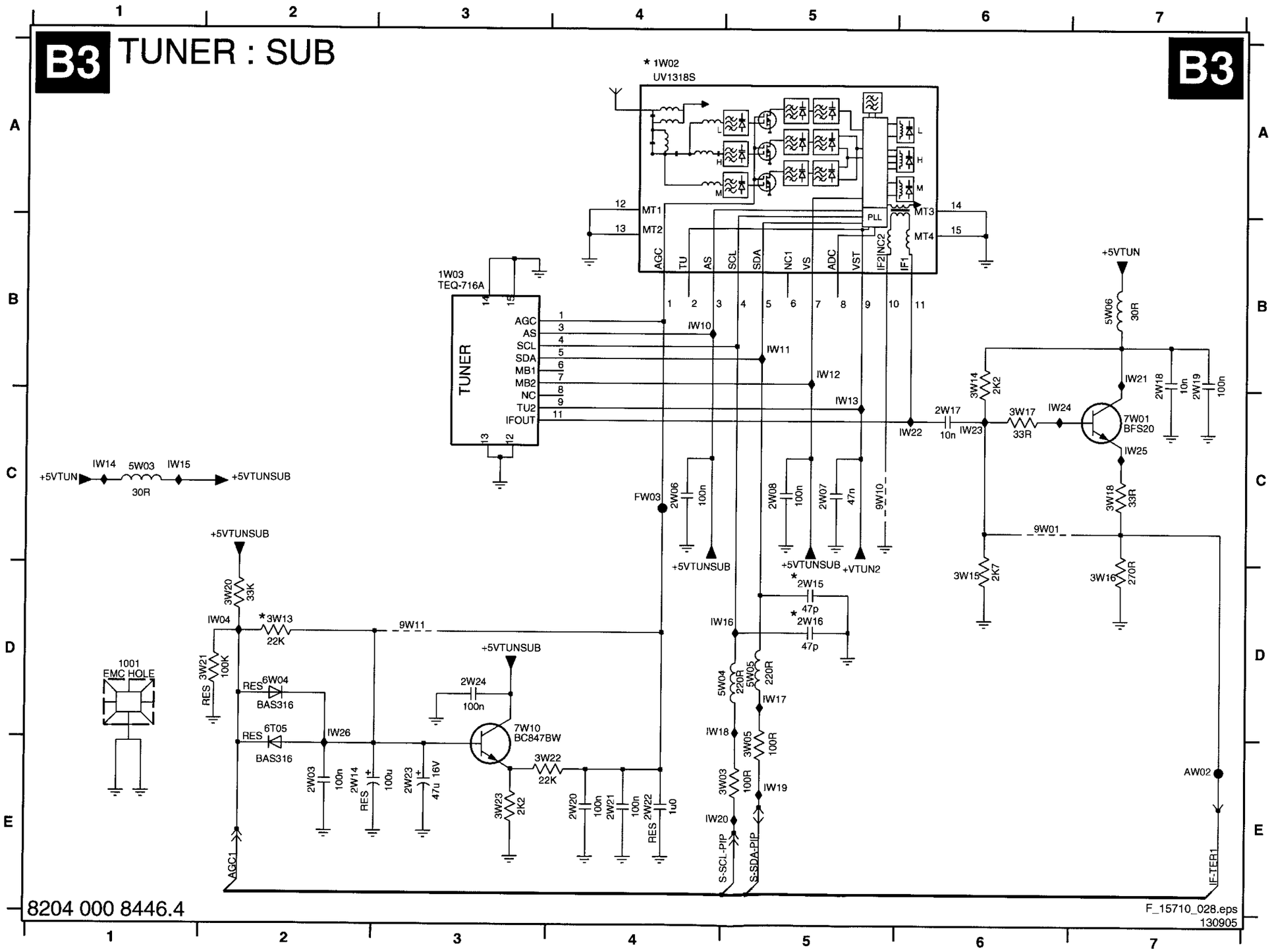

SSB: MPIF Main: Video Source Select

2C01 B4	2C04 C4	2C07 C3	2C10 B2	2C13 E6	2C16 E3	2C19 F3	2C22 F7	2C25 G6	2C29 C3	3C09 B10	5C03 G6	7C07-2 B10	FC03 F5	FC06 G6	IC05 E9	IC08 D5	IC12 B3
2C02 C4	2C05 C3	2C08 C2	2C11 D3	2C14 D3	2C17 E3	2C20 F2	2C23 E9	2C27 F5	3C07 A10	5C01 F4	7C00-4 B7	9C23 A11	FC04 E11	FC07 A12	IC06 B4	IC09 D6	
2C03 B2	2C06 C2	2C09 D3	2C12 D4	2C15 E3	2C18 F2	2C21 F5	2C24 A8	2C28 G6	3C08 B11	5C02 A8	7C07-1 B11	FC02 B5	FC05 A9	IC04 F7	IC07 C5	IC11 B9	

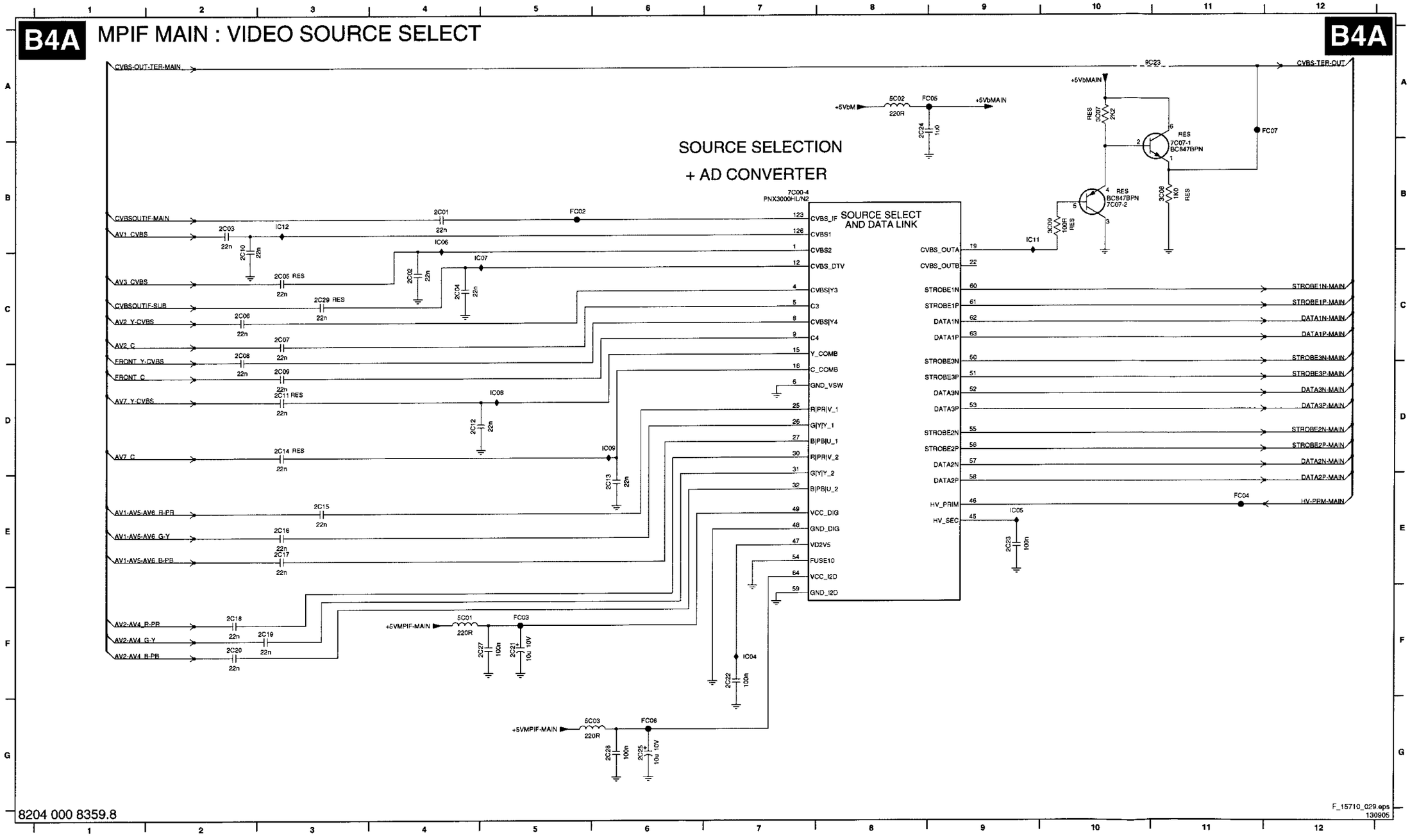

SSB: MPIF Main: Supply + Control

B4B MPIF MAIN: SUPPLY + CONTROL

B4B

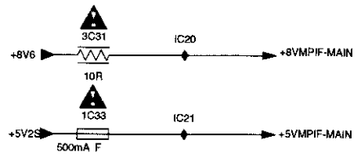

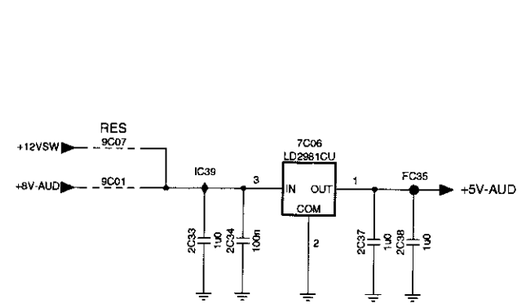

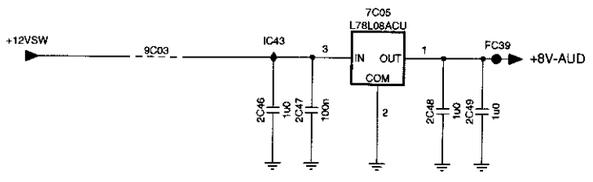

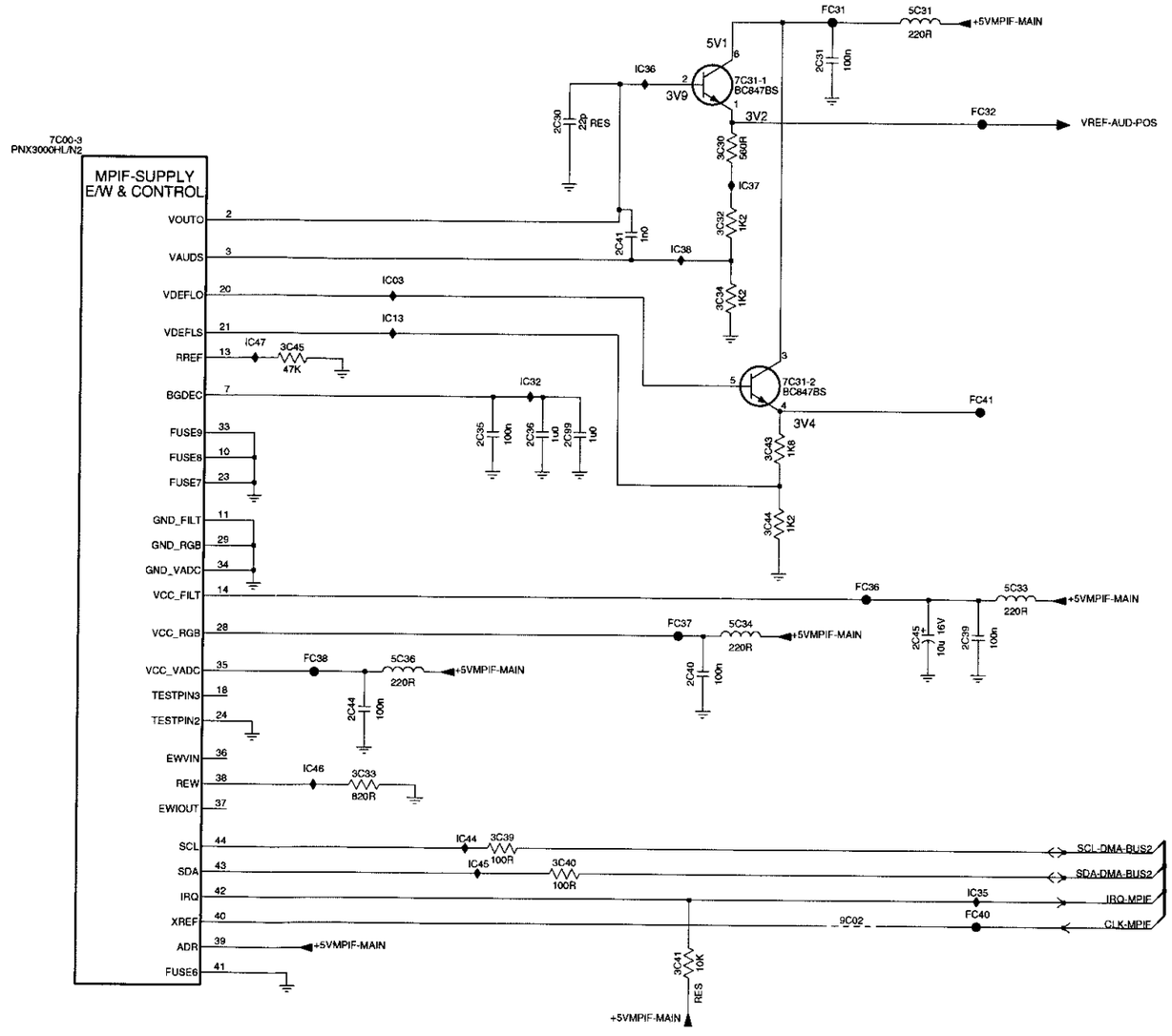

1C33 B1
2C30 B8
2C31 A9
2C33 E2
2C34 E2
2C35 C7
2C36 C8
2C37 E3
2C38 E3
2C39 D10
2C40 E9
2C41 B8
2C44 E7
2C45 D10
2C46 F2
2C47 F2
2C48 F3
2C49 F3
2C99 C8
3C30 B9
3C31 A1
3C32 B9
3C33 E7
3C34 C9
3C39 F8
3C40 F8
3C41 F9
3C43 C9
3C44 D9
3C45 C6
5C31 A10
5C33 D10
5C34 D9
5C36 E7
7C00-3 B5
7C05 F2
7C06 D3
7C31-1 A9
7C31-2 C9
9C01 D2
9C02 F10
9C03 F1
9C07 D2
FC31 A9
FC32 B10
FC35 D3
FC36 D10
FC37 D9
FC38 E6
FC39 F3
FC40 F10
FC41 C10
IC03 B7
IC13 C7
IC20 A2
IC21 B2
IC32 C8
IC35 F10
IC36 A8
IC37 B9
IC38 B9
IC39 D2
IC43 F2
IC44 F7
IC45 F7
IC46 E6
IC47 C6

8204 000 8359.8

F_15710_030.eps
190905

SSB: MPIF Main: IF + SAW Filter

1C51 A3	1C62 B3	2C53 A1	2C60 B1	2C65 C8	2C70 D1	2C79 C7	3C00 B10	3C05 C9	3C53 B5	3C60 D1	3C67 E2	5C53 B6	5C60 C10	7C01-1 B10	7C55 E2	9C54 C2	9C59 E1	AC05 B3	IC14 A2	IC19 B10	IC54 D1	IC59 B5	IC64 C7	IC71 B8
1C52 C3	1C63 C3	2C55 A6	2C61 A10	2C66 C9	2C72 D1	2C80 B10	3C01 B9	3C06 C9	3C56 D1	3C61 D2	3C80 B8	5C54 A1	6C51 C2	7C01-2 B9	7C56 B8	9C55 C8	AC01 B5	FC52 C5	IC15 C2	IC22 B10	IC55 B2	IC60 B5	IC65 C7	IC72 B6
1C53 D3	2C42 A9	2C56 B6	2C62 B10	2C67 C4	2C73 B10	2C81 C10	3C02 B9	3C50 D2	3C57 D1	3C63 D6	3C81 B10	5C55 A10	6C52 D2	7C02 B10	9C51 A2	9C56 C2	AC02 C5	IC01 C10	IC16 D1	IC51 A1	IC56 D1	IC61 C5	IC66 B7	IC73 D1
1C55 B8	2C50 A4	2C57 B6	2C63 B5	2C68 C7	2C74 B6	2C82 D1	3C03 B8	3C51 A5	3C58 D2	3C65 D1	3C83 C10	5C56 C9	6C53 C8	7C53 D2	9C52 A2	9C57 C2	AC03 C5	IC02 C10	IC17 B7	IC52 B1	IC57 D2	IC62 C5	IC67 B8	IC74 C3
1C61 A3	2C52 A1	2C59 B1	2C64 A5	2C69 C5	2C78 C4	2C83 C9	3C04 B7	3C52 C8	3C59 D2	3C66 D2	5C52 A1	5C57 D1	7C00-2 B6	7C54 D2	9C53 B2	9C58 E2	AC04 C5	IC10 B9	IC18 A9	IC53 C8	IC58 E2	IC63 C8	IC68 C9	IC75 B5

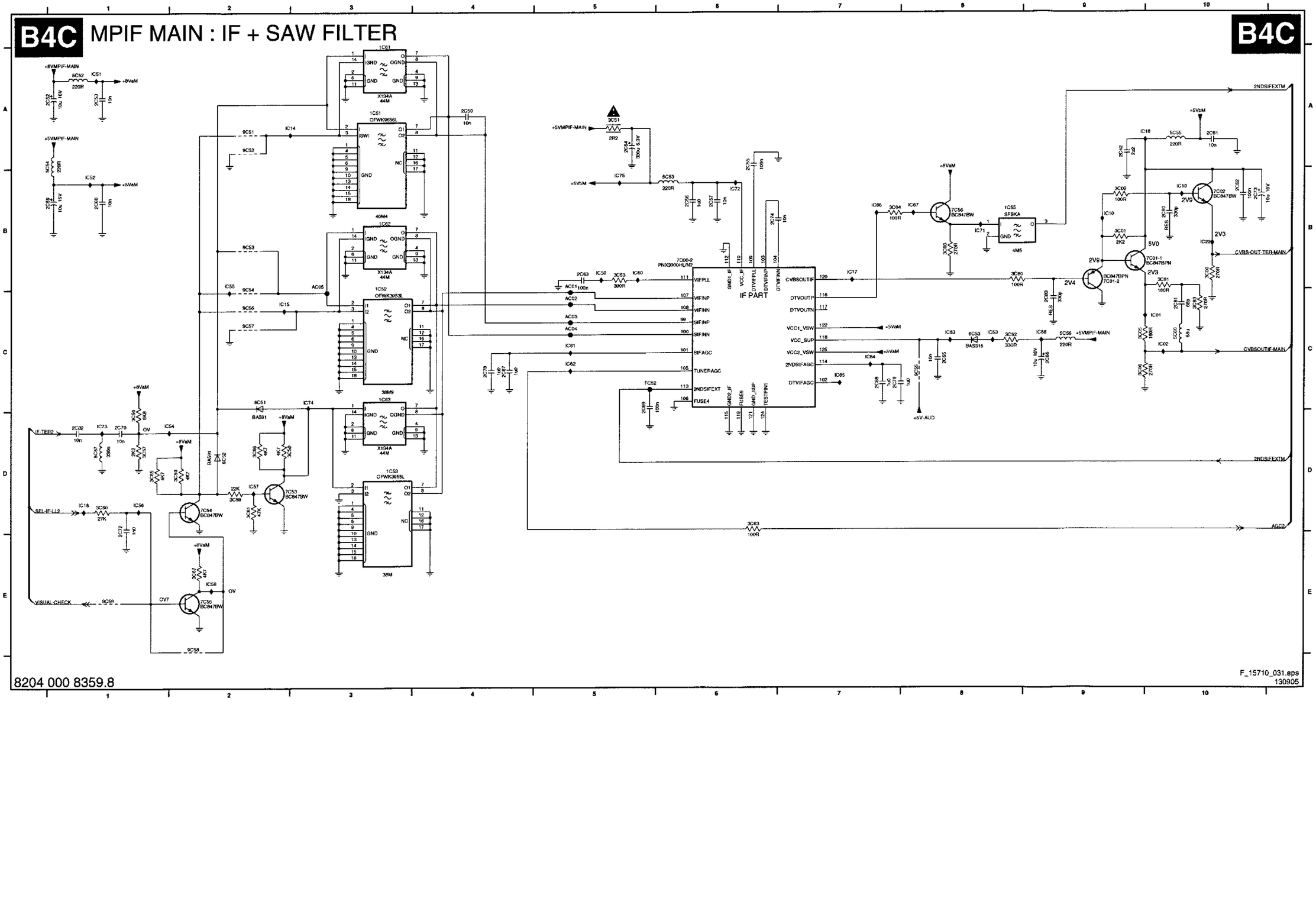

SSB: MPIF Main: Audio Source Selection

B4D MPIF MAIN : AUDIO SOURCE SELECTION

B4D

AUDIO SOURCE SELECTION

AUDIO SOURCE SELECT

7C00-1
PNX3000HL/N2

VAADCP 91
VCC_AADC 77
VCC1_ASW 96
VCC2_ASW 88
MIC2N 92
MIC2P 93
MIC1N 94
MIC1P 95
VAADCREF 89
VAADCN 90
GND1_ASW 97
FUSE1 98
FUSE2 78
GND_AADC 76
FUSE3 71
GND2_ASW 87

AMEXT 17
L1 86
R1 85
L2 84
R2 83
L3 82
R3 81
L4 80
R4 79
L5 128
R5 127
DSNDL1 75
DSNDR1 74
DSNDL2 73
DSNDR2 72
LINEL 68
LINER 67
SCART1L 70
SCART1R 69
SCART2L 66
SCART2R 65

+5V-AUD
+8V-AUD
9K01
IK02
IK23
2K38 1u0
2K39 1u0
2K40 100n
2K41 100n
2K42 47u 16V
2K43 1u 100n
2K45 100n

AUDIO-CENTER-IN — 2K74 1u0 — IK21 — 1n0 2K47 RES
AUDIO-IN1-L — 2K67 1u0 — IK01 — 1n0 2K49 RES
AUDIO-IN1-R — 2K75 1u0 — IK22 — 1n0 2K51 RES
AUDIO-IN2-L — 2K68 1u0 — IK03 — 1n0 2K53 RES
AUDIO-IN2-R — 2K76 1u0 — IK04 — 1n0 2K56 RES
AUDIO-IN3-L — 2K69 1u0 — IK05 — 1n0 2K57
AUDIO-IN3-R — 2K77 1u0 — IK06 — 1n0 2K59 RES
AUDIO-IN5-L — 2K70 1u0 — IK07 — 1n0 2K65 RES
AUDIO-IN5-R — 2K73 1u0 — IK08 — 1n0 2K66 RES
AUDIO-IN4-L — 2K72 1u0 RES — IK10 — 1n0 2K62
AUDIO-IN4-R — 2K71 1u0 — IK09 — RES 1n0 2K64

IK11 — 2K46 1n0 RES — AUDIO-OUT2-M-R
IK12 — 2K48 1n0 RES — AUDIO-OUT2-M-L
IK13 — 2K50 1n0 RES — AUDIO-OUT1-R
IK14 — 2K54 1n0 RES — AUDIO-OUT1-L
IK15 — 1u0 2K60 — DSNDR2
IK16 — 1u0 2K58 — DSNDL2
IK17 — 1u0 2K63 — DSNDR1
IK18 — 1u0 2K61 — DSNDL1
IK19 — 2K32 1n0 RES — AUDIO-OUT3-R
IK20 — 2K55 1n0 RES — AUDIO-OUT3-L

2K38 B2
2K39 B2
2K40 B2
2K41 B3
2K42 B3
2K43 B4
2K45 C4
2K46 E10
2K47 E4
2K48 E10
2K49 E3
2K50 F10
2K51 E4
2K52 H10
2K53 F3
2K54 F10
2K55 I10
2K56 F4
2K57 G3
2K58 G10
2K59 G4
2K60 G10
2K61 H10
2K62 H3
2K63 G10
2K64 I4
2K65 H3
2K66 H4
2K67 E2
2K68 F2
2K69 G2
2K70 H2
2K71 H4
2K72 H2
2K73 H4
2K74 E4
2K75 E4
2K76 F4
2K77 G4
7C00-1 A5
9K01 B4
IK01 E4
IK02 A4
IK03 F4
IK04 F4
IK05 G4
IK06 G4
IK07 H4
IK08 H4
IK09 H5
IK10 H5
IK11 D8
IK12 E8
IK13 F8
IK14 F8
IK15 G8
IK16 G8
IK17 G8
IK18 H8
IK19 H8
IK20 H8
IK21 E4
IK22 E4
IK23 C4

8204 000 8359.8

F_15710_032.eps
130905

SSB: MPIF SUB: Video Source Selection

B4E MPIF SUB : VIDEO SOURCE SELECTION B4E

VIDEO SOURCE SELECTION

7A00-4 PNX3000H-L/N2

SOURCE SELECT AND DATA LINK

CVBSOUT/F-SUB, AV1_CVBS, AV3_CVBS, CVBSOUT/F-MAIN, AV2_Y-CVBS, AV2_C, FRONT_Y-CVBS, FRONT_C, AV7_Y-CVBS, AV7_C, AV1-AV5-AV6_R-PR, AV1-AV5-AV6_G-Y, AV1-AV5-AV6_B-PB, AV2-AV4_R-PR, AV2-AV4_G-Y, AV2-AV4_B-PB

CVBS_IF, CVBS1, CVBS2, CVBS_DTV, CVBS|Y3, C3, CVBS|Y4, C4, Y_COMB, C_COMB, GND_VSW, R|PR|V_1, G|Y|Y_1, B|PB|U_1, R|PR|V_2, G|Y|Y_2, B|PB|U_2, VCC_DIG, GND_DIG, VD2V5, FUSE10, VCC_I2D, GND_I2D

CVBS_OUTA, CVBS_OUTB, STROBE1N, STROBE1P, DATA1N, DATA1P, STROBE3N, STROBE3P, DATA3N, DATA3P, STROBE2N, STROBE2P, DATA2N, DATA2P, HV_PRIM, HV_SEC

STROBE1N-SUB, STROBE1P-SUB, DATA1N-SUB, DATA1P-SUB, STROBE3N-SUB, STROBE3P-SUB, DATA3N-SUB, DATA3P-SUB, STROBE2N-SUB, STROBE2P-SUB, DATA2N-SUB, DATA2P-SUB, HV-PRIM-SUB

+5VMPIF-SUB

8204 000 8359.8

F_15710_033.eps 130905

2A01 B4
2A02 B4
2A03 B2
2A04 B4
2A05 B3
2A06 C2
2A07 C3
2A08 C2
2A09 C3
2A11 C3
2A12 D4
2A13 D5
2A14 D3
2A15 D3
2A16 D3
2A17 E3
2A18 E2
2A19 E3
2A20 F2
2A21 E5
2A22 F6
2A23 E9
2A24 B2
2A25 F5
2A26 C3
2A27 E4
2A28 F4
5A01 E4
5A03 F4
7A00-4 B7
9A10 D2
9A11 D2
9A12 E2
FA02 B5
FA03 E5
FA04 D11
FA06 F5
IA04 E6
IA05 D9
IA06 B4
IA07 B5
IA08 C5
IA09 C5
IA12 B3

SSB: MPIF SUB: Supply + Control

B4F MPIF SUB : SUPPLY + CONTROL

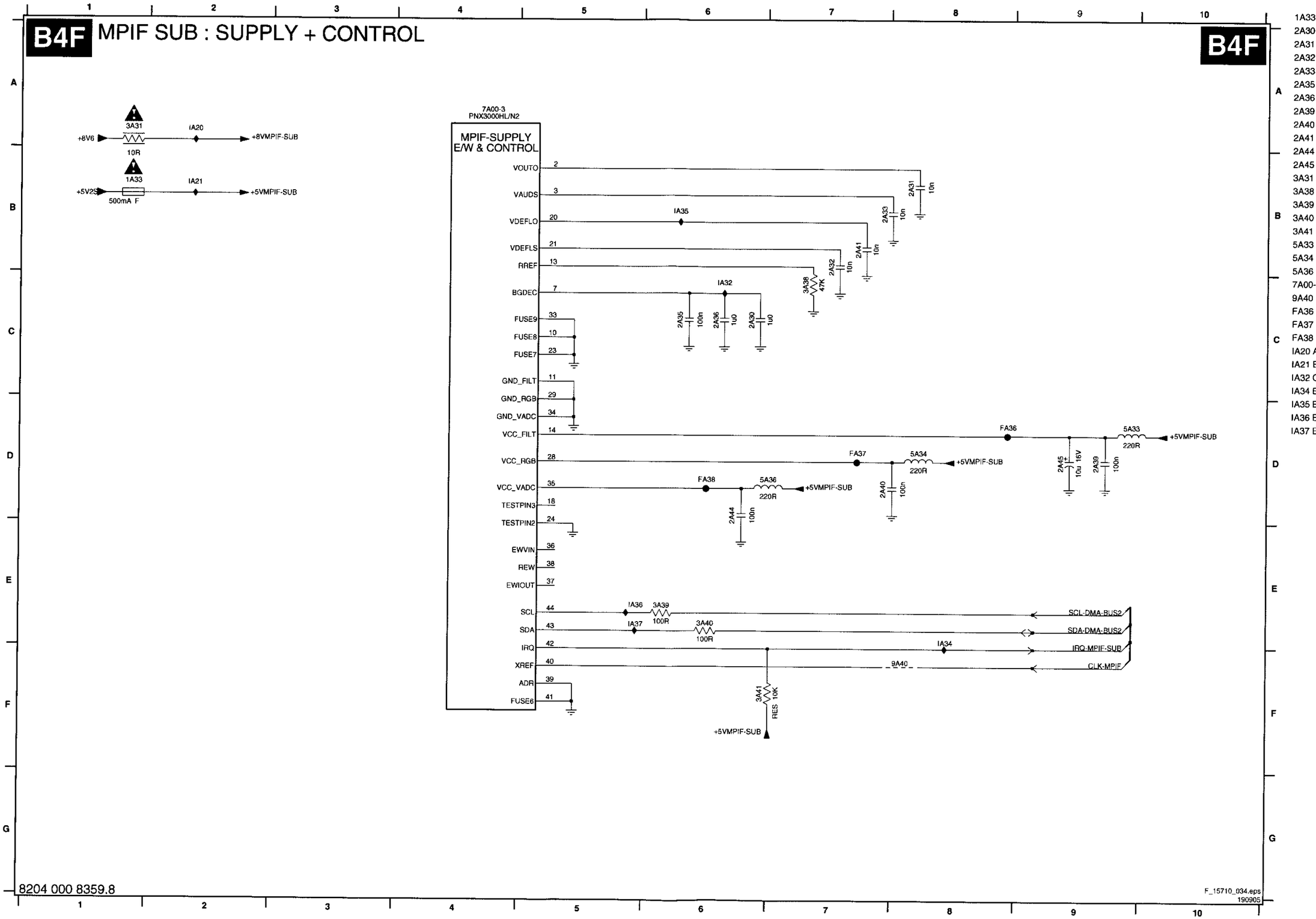

1A33 B1
2A30 C6
2A31 B8
2A32 B7
2A33 B7
2A35 C6
2A36 C6
2A39 D9
2A40 D7
2A41 B7
2A44 D6
2A45 D9
3A31 A1
3A38 C7
3A39 E6
3A40 E6
3A41 F6
5A33 D9
5A34 D8
5A36 D7
7A00-3 A4
9A40 F8
FA36 D8
FA37 D7
FA38 D6
IA20 A2
IA21 B2
IA32 C6
IA34 E8
IA35 B6
IA36 E5
IA37 E5

8204 000 8359.8

F_15710_034.eps
190905

SSB: MPIF SUB: IF + SAW Filter

1A51 B5	1A62 C5	2A50 B6	2A56 B8	2A63 C7	2A68 D10	2A75 C15	3A01 C14	3A06 D14	3A56 E2	3A61 F3	3A80 C12	5A53 B8	6A51 E3	7A01-2 C13	7A57 B11	9A55 D11	AA02 D7	FA51 F8	IA10 B13	IA16 B14	IA51 B9	IA60 C8	IA65 E2	IA70 E4
1A52 D5	1A63 E5	2A52 A1	2A57 B9	2A64 B8	2A69 E8	2A76 C14	3A02 B14	3A07 D12	3A57 F2	3A63 F9	3A81 C14	5A54 B1	6A52 F3	7A02 B15	9A51 B3	9A56 D3	AA03 D7	FA52 E8	IA11 D4	IA17 C15	IA54 B3	IA61 C8	IA66 F3	IA71 B7
1A53 F4	2A10 B14	2A53 A2	2A59 B1	2A65 D11	2A70 E2	2A77 C13	3A03 B11	3A50 F2	3A58 E4	3A65 F2	3A83 C15	5A56 D13	6A53 D11	7A53 F4	9A52 B3	9A57 D3	AA04 D7	IA01 D14	IA13 F1	IA18 D12	IA55 B2	IA62 B10	IA67 F2	
1A55 B12	2A29 B14	2A54 F2	2A60 B2	2A66 D13	2A71 E1	2A90 D10	3A04 B11	3A51 A7	3A59 F3	3A66 E3	5A02 A13	5A57 F1	7A00-2 C8	7A54 F3	9A53 D3	9A58 H2	AA05 D4	IA02 D14	IA14 D8	IA19 D12	IA57 B12	IA63 D11	IA68 G3	
1A61 A5	2A42 B14	2A55 B9	2A61 D7	2A67 D7	2A74 C9	3A00 C15	3A05 D14	3A53 C8	3A60 F2	3A67 G2	5A52 A1	5A60 D14	7A01-1 C14	7A55 G3	9A54 D3	AA01 C7	FA06 A14	IA03 B4	IA15 C10	IA50 A2	IA58 B11	IA64 D10	IA69 E1	

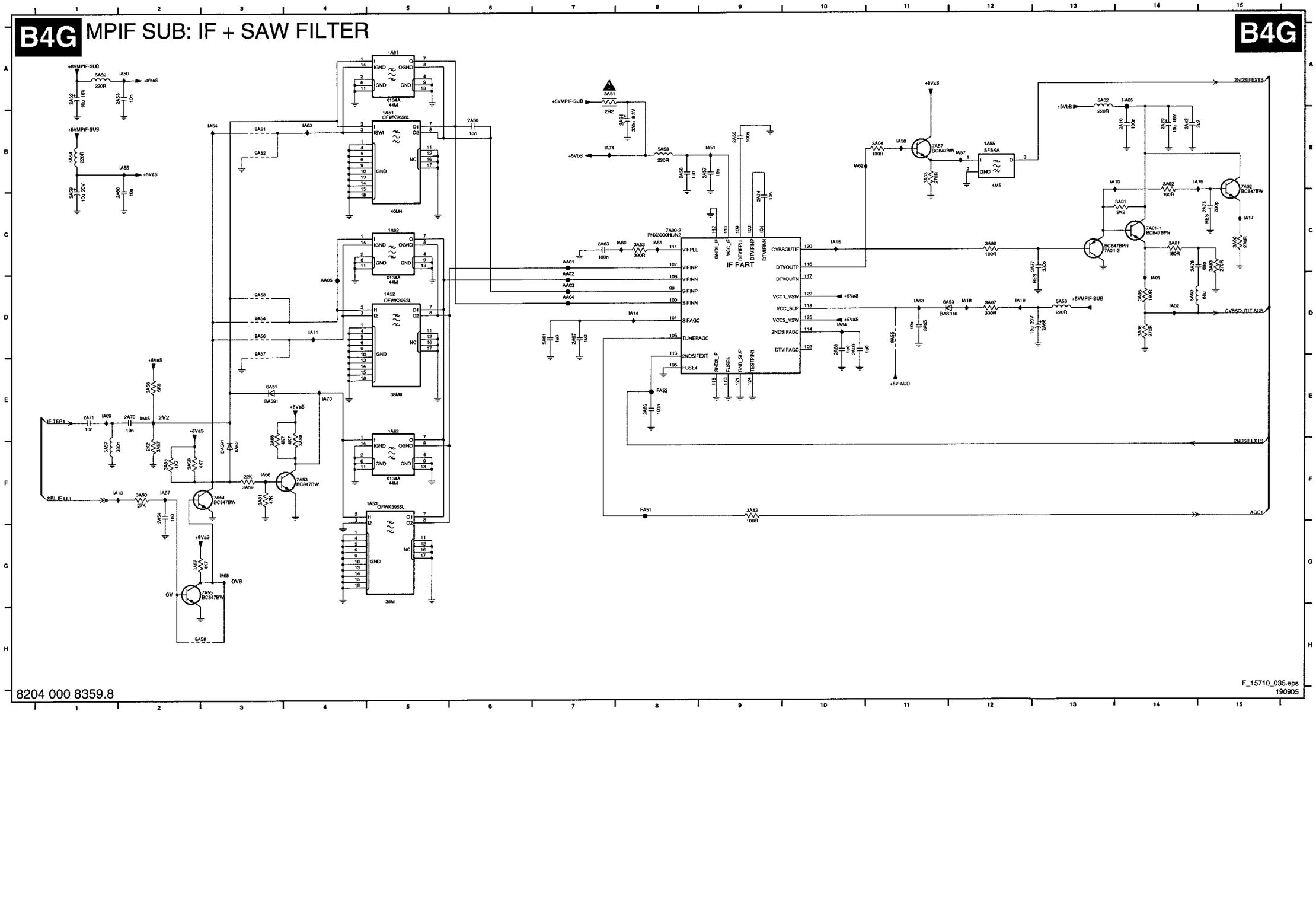

8204 000 8359.8

SSB: MPIF SUB: Audio Source Selection

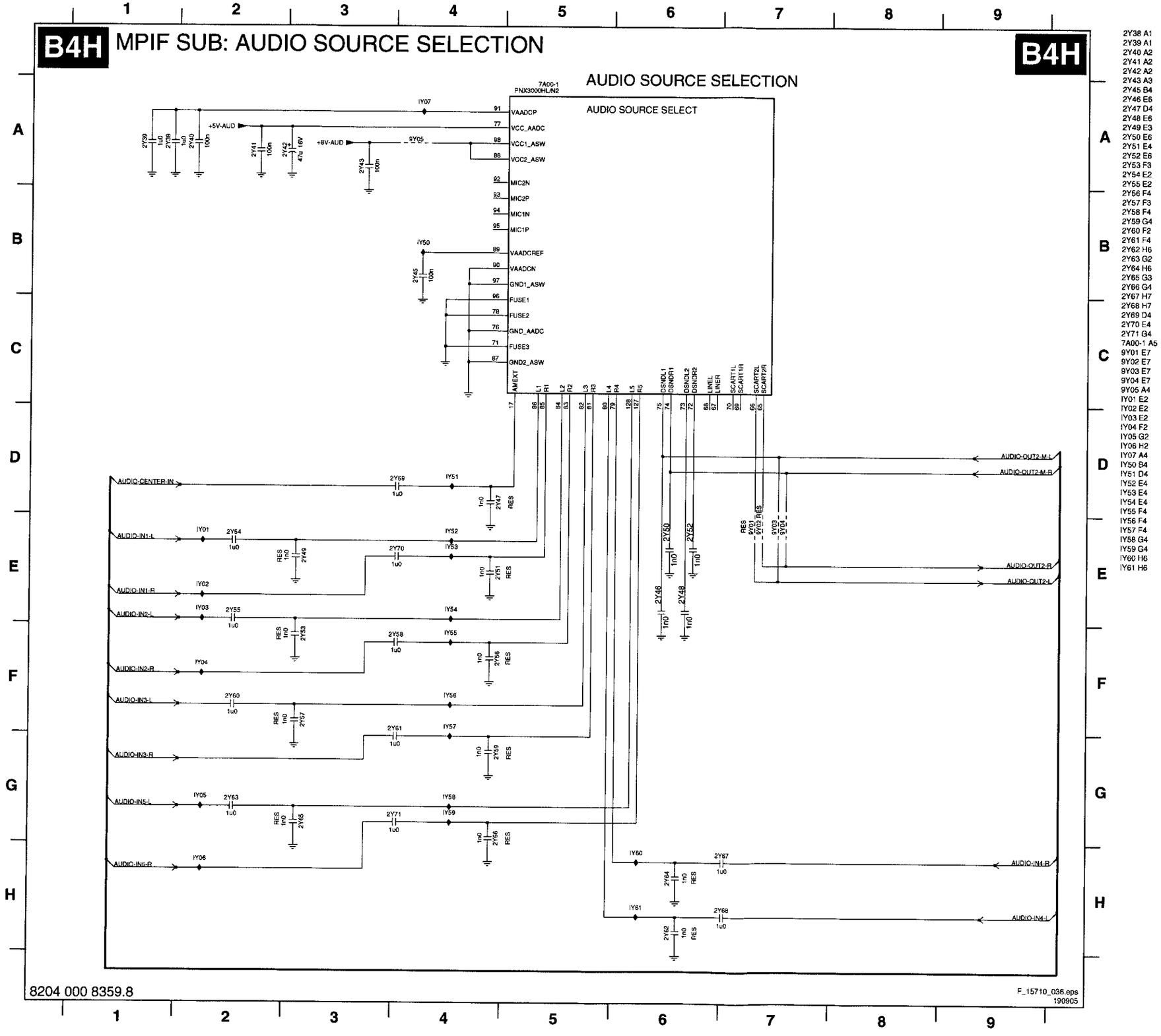

2Y38 A1
2Y39 A1
2Y40 A2
2Y41 A2
2Y42 A2
2Y43 A3
2Y45 B4
2Y46 E6
2Y47 D4
2Y48 E6
2Y49 E3
2Y50 E6
2Y51 E4
2Y52 E6
2Y53 F3
2Y54 E2
2Y55 E2
2Y56 F4
2Y57 F3
2Y58 F4
2Y59 G4
2Y60 F2
2Y61 F4
2Y62 H6
2Y63 G2
2Y64 H6
2Y65 G3
2Y66 G4
2Y67 H7
2Y68 H7
2Y69 D4
2Y70 E4
2Y71 G4
7A00-1 A5
9Y01 E7
9Y02 E7
9Y03 E7
9Y04 E7
9Y05 A4
IY01 E2
IY02 E2
IY03 E2
IY04 F2
IY05 G2
IY06 H2
IY07 A4
IY50 B4
IY51 D4
IY52 E4
IY53 E4
IY54 E4
IY55 F4
IY56 F4
IY57 F4
IY58 G4
IY59 G4
IY60 H6
IY61 H6

SSB: MPIF SUB: Audio Amplifier

B4I MPIF SUB: AUDIO AMPLIFIER

B4I

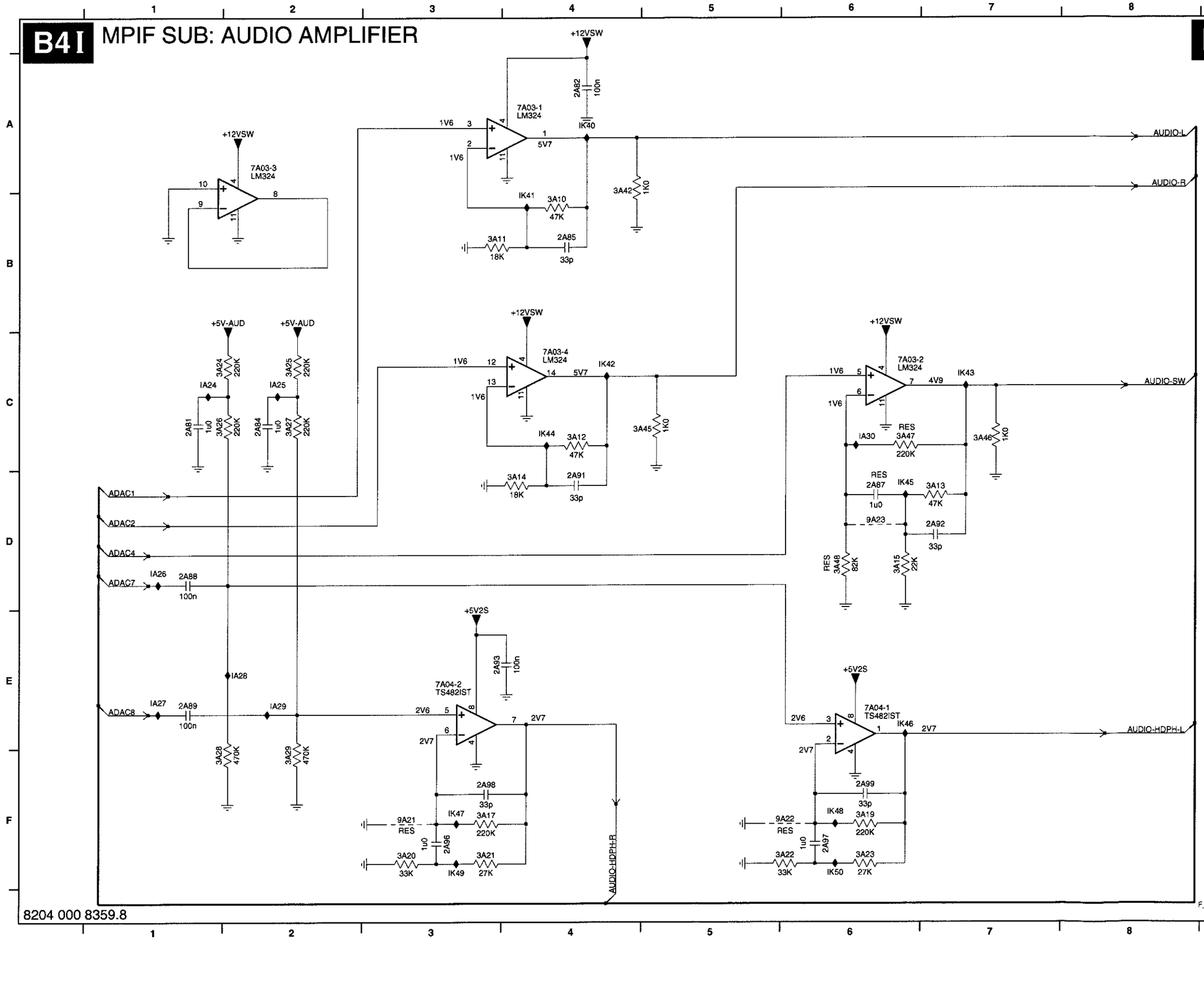

8204 000 8359.8

2A81 C1 IK48 F6
2A82 A4 IK49 F3
2A84 C2 IK50 F6
2A85 B4
2A87 D6
2A88 D1
2A89 E1
2A91 D4
2A92 D7
2A93 E3
2A96 F3
2A97 F6
2A98 F3
2A99 F6
3A10 B4
3A11 B3
3A12 C4
3A13 D7
3A14 D4
3A15 D6
3A17 F3
3A19 F6
3A20 F3
3A21 F3
3A22 F6
3A23 F6
3A24 C1
3A25 C2
3A26 C1
3A27 C2
3A28 F1
3A29 F2
3A42 A4
3A45 C5
3A46 C7
3A47 C6
3A48 D6
7A03-1 A4
7A03-2 C6
7A03-3 A2
7A03-4 C4
7A04-1 E6
7A04-2 E3
9A21 F3
9A22 F6
9A23 D6
IA24 C1
IA25 C2
IA26 D1
IA27 E1
IA28 E2
IA29 E2
IA30 C6
IK40 A4
IK41 B4
IK42 C4
IK43 C7
IK44 C4
IK45 D6
IK46 E6
IK47 F3

SSB: PNX2015: Audio/Video

B5A PNX 2015: AUDIO / VIDEO

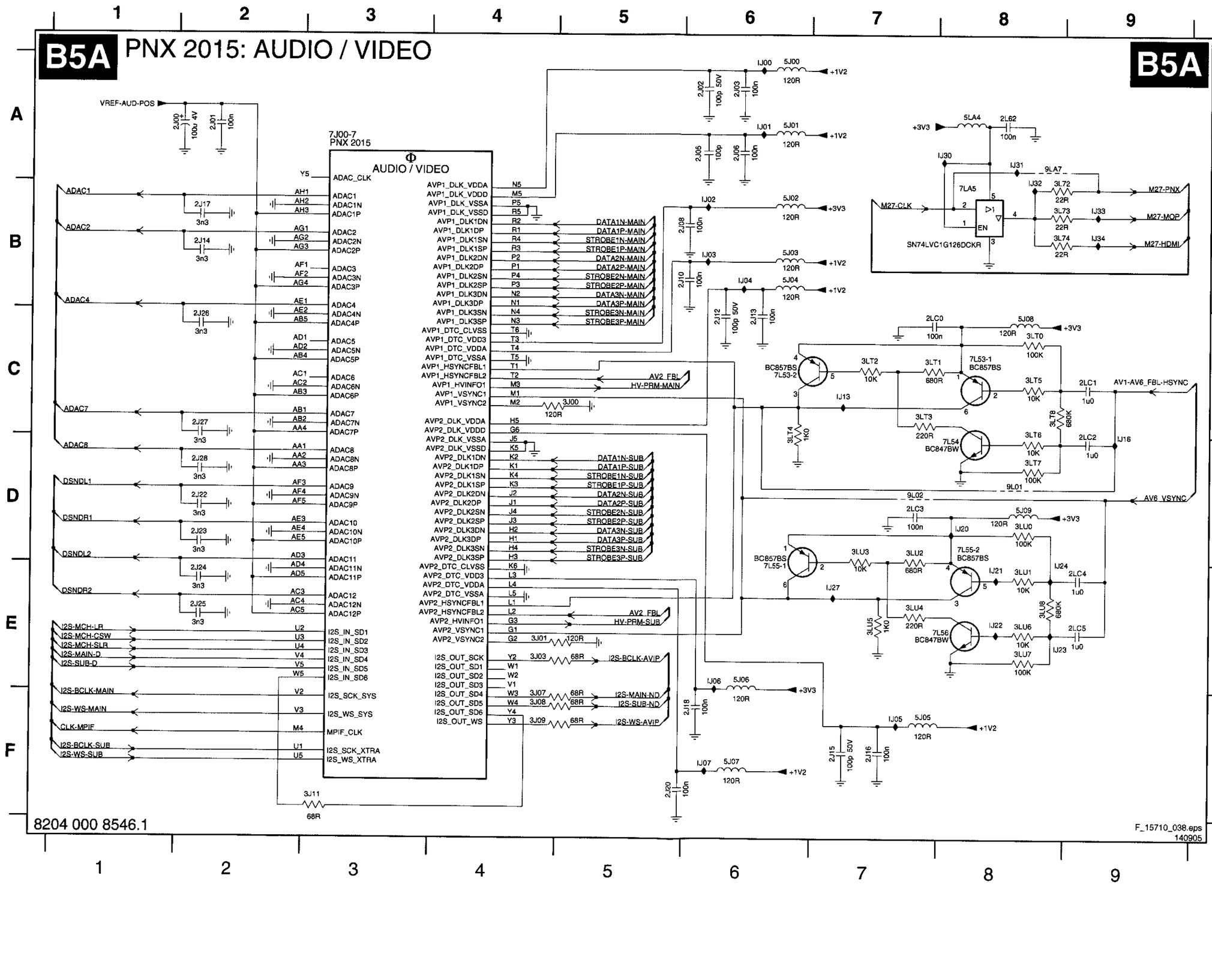

2J00 A1 7LA5 B8
2J01 A2 9L01 D8
2J02 A6 9L02 D7
2J03 A6 9LA7 A8
2J05 A6 IJ00 A6
2J06 A6 IJ01 A6
2J08 B5 IJ02 B6
2J10 B5 IJ03 B6
2J12 C6 IJ04 B6
2J13 C6 IJ05 F7
2J14 B2 IJ06 E6
2J15 F7 IJ07 F6
2J16 F7 IJ13 C7
2J17 B2 IJ16 C9
2J18 F6 IJ20 D8
2J20 F5 IJ21 E8
2J22 D2 IJ22 E8
2J23 D2 IJ23 E8
2J24 E2 IJ24 D8
2J25 E2 IJ27 E7
2J26 C2 IJ30 A8
2J27 C2 IJ31 A8
2J28 D2 IJ32 A8
2L62 A8 IJ33 B9
2LC0 C7 IJ34 B9
2LC1 C9
2LC2 D9
2LC3 D7
2LC4 E9
2LC5 E9
3J00 C5
3J01 E4
3J03 E4
3J07 F4
3J08 F4
3J09 F4
3J11 F3
3L72 B8
3L73 B8
3L74 B8
3LT0 C8
3LT1 C7
3LT2 C7
3LT3 C7
3LT4 C6
3LT5 C8
3LT6 C8
3LT7 D8
3LT8 C8
3LU0 D8
3LU1 E8
3LU2 D7
3LU3 D7
3LU4 E7
3LU5 E7
3LU6 E8
3LU7 E8
3LU8 E8
5J00 A6
5J01 A6
5J02 B6
5J03 B6
5J04 B6
5J05 F7
5J06 E6
5J07 F6
5J08 C8
5J09 D8
5LA4 A8
7J00-7 A3
7L53-1 C8
7L53-2 C6
7L54 D8
7L55-1 D6
7L55-2 D8
7L56 E8

SSB: PNX2015: DV I/O Interface

B5B PNX 2015: DV I/O INTERFACE

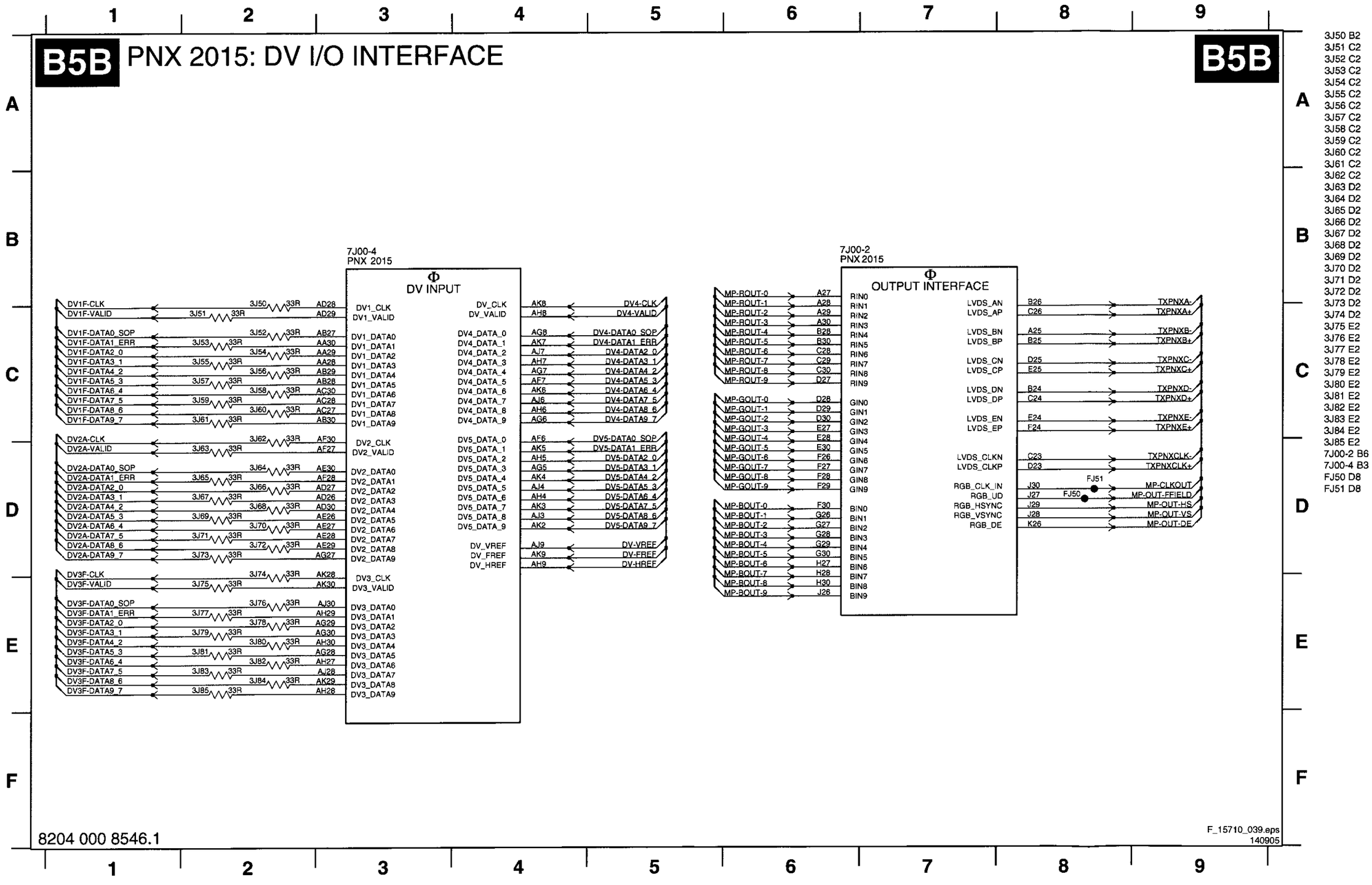

3J50 B2
3J51 C2
3J52 C2
3J53 C2
3J54 C2
3J55 C2
3J56 C2
3J57 C2
3J58 C2
3J59 C2
3J60 C2
3J61 C2
3J62 C2
3J63 D2
3J64 D2
3J65 D2
3J66 D2
3J67 D2
3J68 D2
3J69 D2
3J70 D2
3J71 D2
3J72 D2
3J73 D2
3J74 D2
3J75 E2
3J76 E2
3J77 E2
3J78 E2
3J79 E2
3J80 E2
3J81 E2
3J82 E2
3J83 E2
3J84 E2
3J85 E2
7J00-2 B6
7J00-4 B3
FJ50 D8
FJ51 D8

8204 000 8546.1

F_15710_039.eps
140905

SSB: PNX2015: Tunnel Bus

B5C PNX 2015: TUNNELBUS

B5C

7J00-1
PNX 2015

TUNNELBUS

+2V5-S
3L38 1K0
2L03 100n
3L39 1K0
2L01 100n
IL05
3L78 47R
IL92
TUNS-REF

+2V5-TUN
9LA8
+2V5-N
9LA9 RES
3L36 1K0
2L04 100n RES
3L37 1K0
2L00 100n
IL04
3L79 47R
IL93
TUNN-REF

+2V5-N
3L57 100R RES
3L56 100R RES

TUN-SPIDER-RX-BUSY A1
TUN-SPIDER-RX-CLKN 3L00 47R D2
TUN-SPIDER-RX-CLKP 3L10 47R C2
TUN-SPIDER-RX-DATA0 3L01 47R C4
TUN-SPIDER-RX-DATA1 3L02 47R B4
TUN-SPIDER-RX-DATA2 3L03 47R A4
TUN-SPIDER-RX-DATA3 3L04 47R F3
TUN-SPIDER-RX-DATA4 3L05 47R B3
TUN-SPIDER-RX-DATA5 3L06 47R C3
TUN-SPIDER-RX-DATA6 3L07 47R D3
TUN-SPIDER-RX-DATA7 3L08 47R E3
TUN-SPIDER-RX-DATA8 3L09 47R F2
TUN-SPIDER-RX-DATA9 3L20 47R A3
TUN-SPIDER-RX-DATA10 3L22 47R F1
TUN-SPIDER-RX-DATA11 3L24 47R A2
TUN-SPIDER-RX-DATA12 3L26 47R B1
TUN-SPIDER-RX-DATA13 3L28 47R C1
TUN-SPIDER-RX-DATA14 3L30 47R D1
TUN-SPIDER-RX-DATA15 3L32 47R E1

TUN-SPIDER-TX-DATA0 D9
TUN-SPIDER-TX-DATA1 C9
TUN-SPIDER-TX-DATA2 A9
TUN-SPIDER-TX-DATA3 D8
TUN-SPIDER-TX-DATA4 B9
TUN-SPIDER-TX-DATA5 D7
TUN-SPIDER-TX-DATA6 C8
TUN-SPIDER-TX-DATA7 A8
TUN-SPIDER-TX-DATA8 D6
TUN-SPIDER-TX-DATA9 C6
TUN-SPIDER-TX-DATA10 B6
TUN-SPIDER-TX-DATA11 A6
TUN-SPIDER-TX-DATA12 D5
TUN-SPIDER-TX-DATA13 C5
TUN-SPIDER-TX-DATA14 A5
TUN-SPIDER-TX-DATA15 E4

TUN-SPIDER-TX-BUSY 3L44 47R D4
TUN-SPIDER-TX-CLKN B7
TUN-SPIDER-TX-CLKP C7
3L34 100R RES
TUNN-REF A7
2L05 1n0

TUNN_TX_BUSY	TUNS_TX_BUSY	R28 TUN-VIPER-RX-BUSY
TUNN_TX_CLKN	TUNS_TX_CLKN	M30
TUNN_TX_CLKP	TUNS_TX_CLKP	M29 3L41 47R TUN-VIPER-RX-CLKP
TUNN_TX_D0	TUNS_TX_D0	K28 3L11 47R TUN-VIPER-RX-DATA0
TUNN_TX_D1	TUNS_TX_D1	K27 3L12 47R TUN-VIPER-RX-DATA1
TUNN_TX_D2	TUNS_TX_D2	L30 3L13 47R TUN-VIPER-RX-DATA2
TUNN_TX_D3	TUNS_TX_D3	L28 3L14 47R TUN-VIPER-RX-DATA3
TUNN_TX_D4	TUNS_TX_D4	K29 3L15 47R TUN-VIPER-RX-DATA4
TUNN_TX_D5	TUNS_TX_D5	N26 3L16 47R TUN-VIPER-RX-DATA5
TUNN_TX_D6	TUNS_TX_D6	L27 3L17 47R TUN-VIPER-RX-DATA6
TUNN_TX_D7	TUNS_TX_D7	K30 3L18 47R TUN-VIPER-RX-DATA7
TUNN_TX_D8	TUNS_TX_D8	M27 3L19 47R TUN-VIPER-RX-DATA8
TUNN_TX_D9	TUNS_TX_D9	N28 3L21 47R TUN-VIPER-RX-DATA9
TUNN_TX_D10	TUNS_TX_D10	N27 3L23 47R TUN-VIPER-RX-DATA10
TUNN_TX_D11	TUNS_TX_D11	P28 3L25 47R TUN-VIPER-RX-DATA11
TUNN_TX_D12	TUNS_TX_D12	P27 3L27 47R TUN-VIPER-RX-DATA12
TUNN_TX_D13	TUNS_TX_D13	N30 3L29 47R TUN-VIPER-RX-DATA13
TUNN_TX_D14	TUNS_TX_D14	N29 3L31 47R TUN-VIPER-RX-DATA14
TUNN_TX_D15	TUNS_TX_D15	R29 3L33 47R TUN-VIPER-RX-DATA15
TUNN_RX_D0	TUNS_RX_D0	R27 TUN-VIPER-TX-DATA0
TUNN_RX_D1	TUNS_RX_D1	P30 TUN-VIPER-TX-DATA1
TUNN_RX_D2	TUNS_RX_D2	T27 TUN-VIPER-TX-DATA2
TUNN_RX_D3	TUNS_RX_D3	R30 TUN-VIPER-TX-DATA3
TUNN_RX_D4	TUNS_RX_D4	T28 TUN-VIPER-TX-DATA4
TUNN_RX_D5	TUNS_RX_D5	T29 TUN-VIPER-TX-DATA5
TUNN_RX_D6	TUNS_RX_D6	T30 TUN-VIPER-TX-DATA6
TUNN_RX_D7	TUNS_RX_D7	U27 TUN-VIPER-TX-DATA7
TUNN_RX_D8	TUNS_RX_D8	V27 TUN-VIPER-TX-DATA8
TUNN_RX_D9	TUNS_RX_D9	V28 TUN-VIPER-TX-DATA9
TUNN_RX_D10	TUNS_RX_D10	V29 TUN-VIPER-TX-DATA10
TUNN_RX_D11	TUNS_RX_D11	V30 TUN-VIPER-TX-DATA11
TUNN_RX_D12	TUNS_RX_D12	W26 TUN-VIPER-TX-DATA12
TUNN_RX_D13	TUNS_RX_D13	W27 TUN-VIPER-TX-DATA13
TUNN_RX_D14	TUNS_RX_D14	W28 TUN-VIPER-TX-DATA14
TUNN_RX_D15	TUNS_RX_D15	W29 TUN-VIPER-TX-DATA15
TUNN_RX_BUSY	TUNS_RX_BUSY	W30 3L43 47R TUN-VIPER-TX-BUSY
TUNN_RX_CLKN	TUNS_RX_CLKN	U30 TUN-VIPER-TX-CLKN
TUNN_RX_CLKP	TUNS_RX_CLKP	U28 120R RES 3L35 TUN-VIPER-TX-CLKP
TUNN_REF	TUNS_REF	M28 TUNS-REF

2L02 100p

8204 000 8546.1

F_15710_040.eps
140905

2L00 D2
2L01 C2
2L02 E8
2L03 C2
2L04 D2
2L05 E5
3L00 B5
3L01 B5
3L02 B5
3L03 B5
3L04 B5
3L05 B5
3L06 B5
3L07 C5
3L08 C5
3L09 C5
3L10 B5
3L11 B8
3L12 B7
3L13 B8
3L14 B7
3L15 B8
3L16 B7
3L17 C8
3L18 C7
3L19 C8
3L20 C5
3L21 C7
3L22 C5
3L23 C8
3L24 C5
3L25 C7
3L26 C5
3L27 C8
3L28 C5
3L29 C7
3L30 C5
3L31 C8
3L32 C5
3L33 C7
3L34 E5
3L35 E8
3L36 D1
3L37 D1
3L38 C1
3L39 C1
3L41 B8
3L43 E7
3L44 D5
3L78 C2
3L79 D2
3LS6 B5
3LS7 B5
7J00-1 A6
9L00 B2
9LA8 D1
9LA9 D1
IL04 D2
IL05 C2
IL06 B2
IL92 C2
IL93 D2

SSB: PNX2015: DDR Interface

B5D PNX 2015: DDR INTERFACE

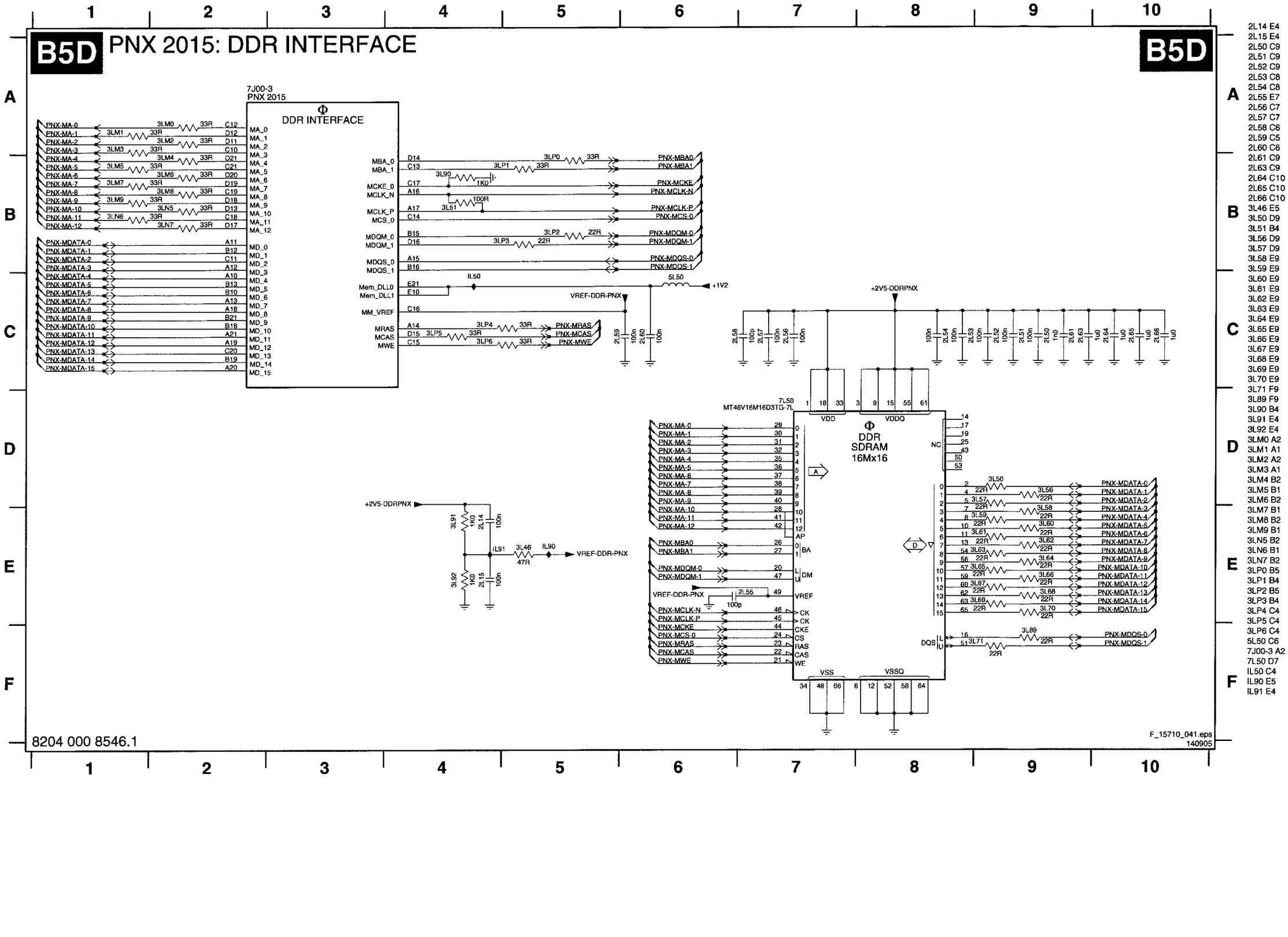

8204 000 8546.1

2L14 E4
2L15 E4
2L50 C9
2L51 C9
2L52 C9
2L53 C8
2L54 C8
2L55 E7
2L56 C7
2L57 C7
2L58 C6
2L59 C5
2L60 C6
2L61 C9
2L63 C9
2L64 C10
2L65 C10
2L66 C10
3L46 E5
3L50 D9
3L51 B4
3L56 D9
3L57 D9
3L58 E9
3L59 E9
3L60 E9
3L61 E9
3L62 E9
3L63 E9
3L64 E9
3L65 E9
3L66 E9
3L67 E9
3L68 E9
3L69 E9
3L70 E9
3L71 F9
3L89 F9
3L90 B4
3L91 E4
3L92 E4
3LM0 A2
3LM1 A1
3LM2 A2
3LM3 A1
3LM4 B2
3LM5 B1
3LM6 B2
3LM7 B1
3LM8 B2
3LM9 B1
3LN5 B2
3LN6 B1
3LN7 B2
3LP0 B5
3LP1 B4
3LP2 B5
3LP3 B4
3LP4 C4
3LP5 C4
3LP6 C4
5L50 C6
7J00-3 A2
7L50 D7
IL50 C4
IL90 E5
IL91 E4

SSB: PNX2015: Standby + Control

B5E PNX 2015: STANDBY + CONTROL

B5E

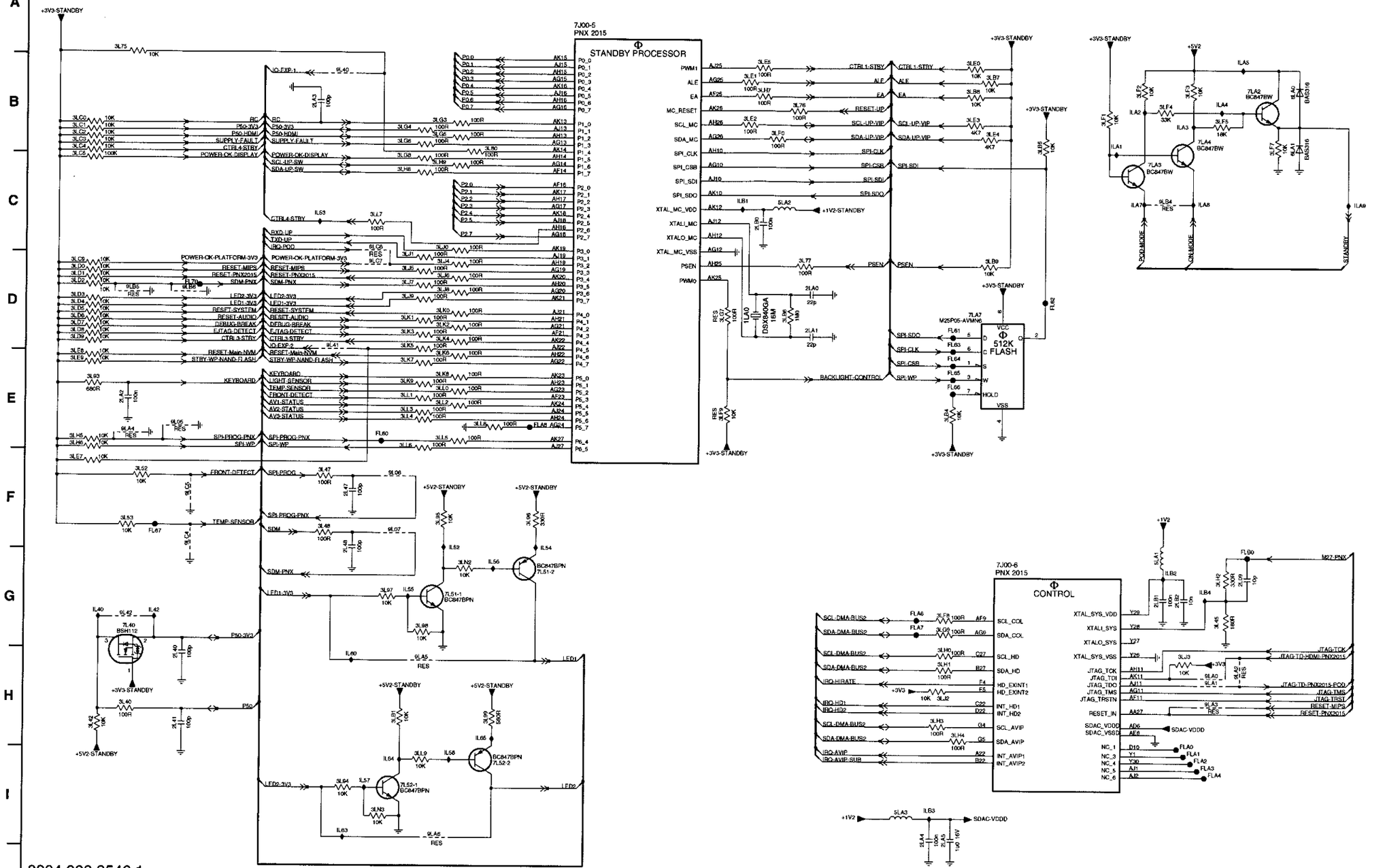

1LA0 D7	3LK1 D4
2L09 G12	3LK2 D4
2L40 H2	3LK3 D4
2L41 H2	3LK4 D4
2L47 F3	3LK5 D4
2L48 F3	3LK6 E4
2LA0 D8	3LK7 E4
2LA1 D8	3LK8 E4
2LA2 E1	3LK9 E4
2LA3 B3	3LL0 E4
2LA4 I9	3LL1 E4
2LA5 I9	3LL2 E4
2LB0 C7	3LL3 E4
2LB1 G12	3LL4 E4
2LB2 G12	3LL5 E4
3L40 H1	3LL6 E4
3L42 H1	3LL7 C4
3L45 G12	3LL8 E5
3L47 F3	3LL9 I4
3L48 F3	3LN2 G5
3L52 F1	3LN3 I4
3L53 F1	5LA1 G12
3L75 A1	5LA2 C8
3L76 B8	5LA3 I9
3L77 D8	6LA0 B13
3L80 B5	6LA1 B13
3L93 E1	7J00-5 A6
3L94 I3	7J00-6 G10
3L95 F4	7L40 G1
3L96 F5	7L51-1 G4
3L97 G4	7L51-2 G5
3L98 G4	7L52-1 I4
3L99 H5	7L52-2 I5
3LB1 H4	7LA2 B12
3LB4 E9	7LA3 C11
3LB5 B10	7LA4 B12
3LB6 D8	7LA7 D10
3LB7 B10	9L05 E2
3LB8 B10	9L06 F4
3LB9 D10	9L07 F4
3LC0 B1	9L40 B3
3LC1 B1	9L41 D3
3LC2 B1	9L42 G1
3LC3 B1	9LA0 H12
3LC4 B1	9LA1 H12
3LC5 C1	9LA2 H12
3LC9 D1	9LA3 H12
3LD0 D1	9LA4 E1
3LD1 D1	9LA5 H4
3LD2 D1	9LA6 I4
3LD3 D1	9LB4 C12
3LD4 D1	9LB5 D1
3LD5 D1	9LB6 D2
3LD6 D1	9LC4 F2
3LD7 D1	9LC5 F2
3LD8 D1	9LC6 C4
3LD9 D1	9LC7 D4
3LE0 B10	FL60 E4
3LE1 B7	FL61 D9
3LE2 B7	FL62 D10
3LE3 B10	FL63 D9
3LE4 B10	FL64 E9
3LE5 B8	FL65 E9
3LE7 F1	FL66 E9
3LE8 E1	FL67 F1
3LE9 E1	FL70 D2
3LF0 B8	FLA0 H12
3LF1 B11	FLA1 I12
3LF2 B11	FLA2 I12
3LF3 B12	FLA3 I12
3LF4 B12	FLA4 I12
3LF5 B12	FLA6 G9
3LF7 B13	FLA7 G9
3LF8 G9	FLA8 E5
3LF9 E7	FLB0 G12
3LG3 B4	IL40 G1
3LG4 B4	IL42 G1
3LG5 B4	IL52 F4
3LG6 B4	IL53 C3
3LG7 D7	IL54 F5
3LG8 C4	IL55 G4
3LG9 G9	IL56 G5
3LH0 H9	IL57 I4
3LH1 H9	IL58 I4
3LH2 G12	IL60 H3
3LH3 H9	IL63 I3
3LH4 H10	IL64 I4
3LH5 E1	IL65 H5
3LH6 E1	ILA1 B11
3LH7 B8	ILA2 B11
3LH8 C4	ILA3 B12
3LH9 C4	ILA4 B12
3LJ0 C4	ILA5 B12
3LJ1 D4	ILA7 C11
3LJ2 H9	ILA8 C12
3LJ3 H12	ILA9 C13
3LJ4 D4	ILB1 C7
3LJ5 D4	ILB2 G12
3LJ6 D4	ILB3 I9
3LJ7 D4	ILB4 G12
3LJ8 D4	
3LJ9 D4	
3LK0 D4	

SSB: PNX2015: Supply

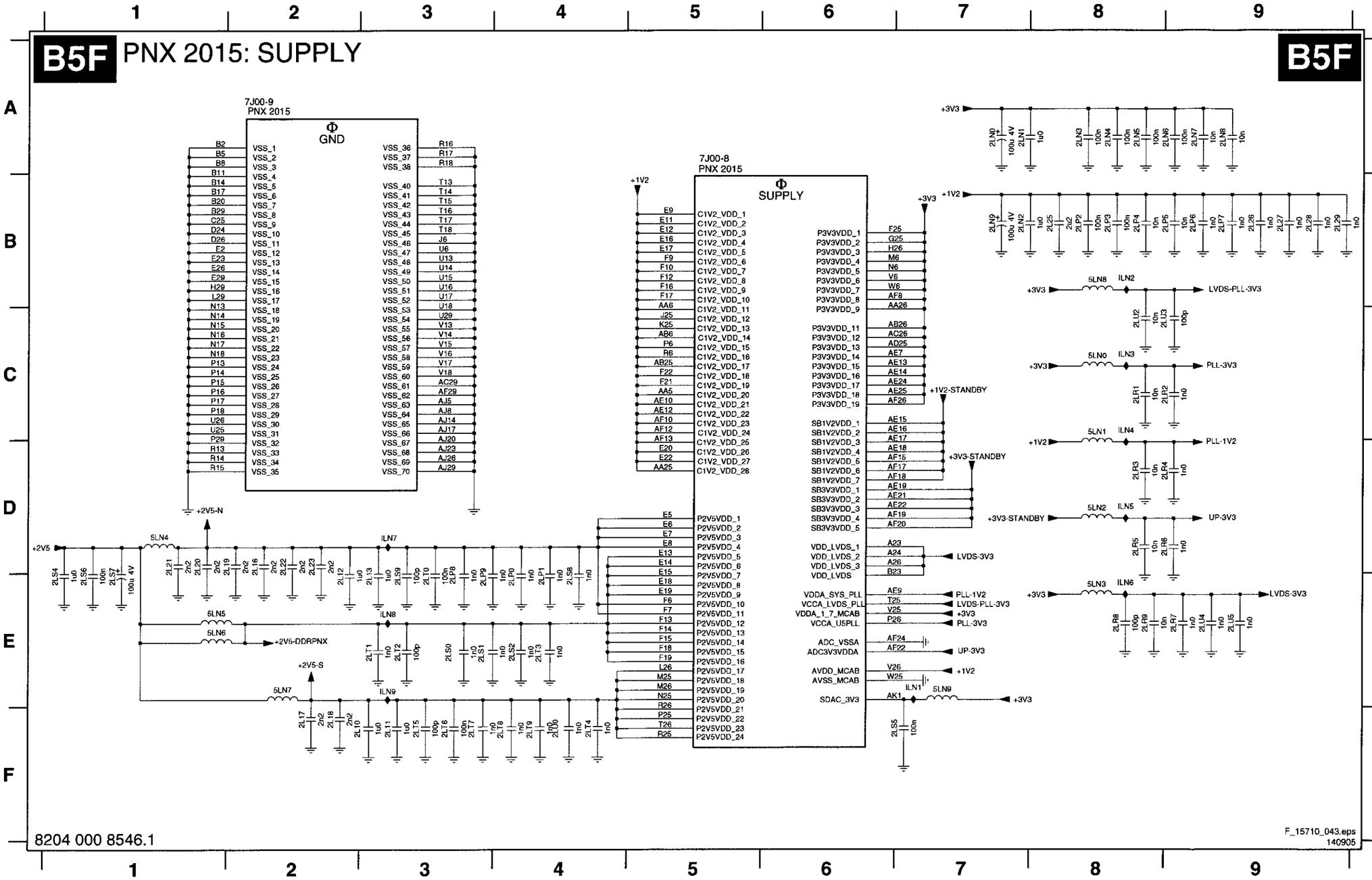

2L10 F3
2L11 F3
2L12 E2
2L13 E3
2L16 D2
2L17 F2
2L18 F2
2L19 D2
2L20 D1
2L21 D1
2L22 D2
2L23 D2
2L25 B8
2L26 B9
2L27 B9
2L28 B9
2L29 B9
2LN0 A7
2LN1 A7
2LN2 B7
2LN3 A8
2LN4 A8
2LN5 A8
2LN6 A9
2LN7 A9
2LN8 A9
2LN9 B7
2LP0 E4
2LP1 E4
2LP2 B8
2LP3 B8
2LP4 B8
2LP5 B9
2LP6 B9
2LP7 B9
2LP8 E3
2LP9 E3
2LR1 C8
2LR2 C9
2LR3 D8
2LR4 D9
2LR5 D8
2LR6 D9
2LR7 E9
2LR8 E8
2LR9 E8
2LS0 E3
2LS1 E3
2LS2 E4
2LS4 E1
2LS5 F7
2LS6 E1
2LS7 E1
2LS8 E4
2LS9 E3
2LT0 E3
2LT1 E3
2LT2 E3
2LT3 E4
2LT4 F4
2LT5 F3
2LT6 F3
2LT7 F3
2LT8 F4
2LT9 F4
2LU0 F4
2LU2 C8
2LU3 C8
2LU4 E9
2LU5 E9
5LN0 C8
5LN1 C8
5LN2 D8
5LN3 E8
5LN4 D1
5LN5 E1
5LN6 E1
5LN7 E2
5LN8 B8
5LN9 E7
7J00-8 A5
7J00-9 A2
ILN1 E7
ILN2 B8
ILN3 C8
ILN4 C8
ILN5 D8
ILN6 E8
ILN7 D3
ILN8 E3
ILN9 E3

SSB: PNX2015: Standby Processor Debug

B5G PNX 2015: STANDBY PROCESSOR DEBUG

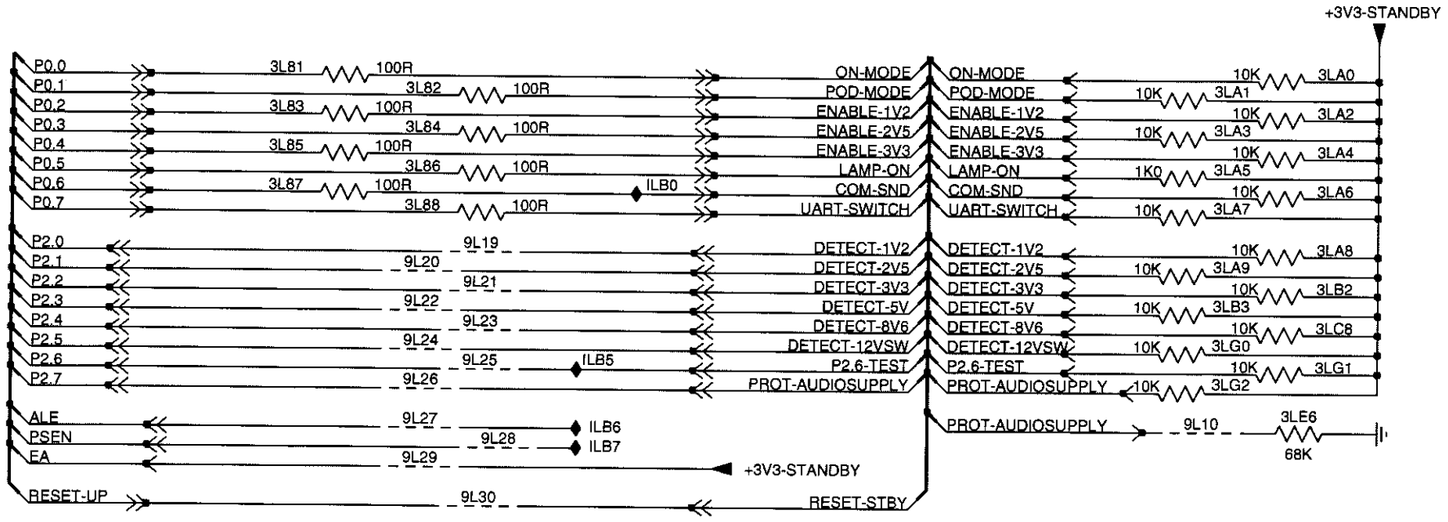

8204 000 8546.1

F_15710_044.eps
140905

3L81 B2
3L82 B2
3L83 B2
3L84 B2
3L85 B2
3L86 B2
3L87 B2
3L88 B2
3LA0 B6
3LA1 B5
3LA2 B6
3LA3 B5
3LA4 B6
3LA5 B5
3LA6 B6
3LA7 B5
3LA8 C6
3LA9 C5
3LB2 C6
3LB3 C5
3LC8 C6
3LE6 C6
3LG0 C5
3LG1 C6
3LG2 C5
9L10 C5
9L19 C3
9L20 C2
9L21 C3
9L22 C2
9L23 C3
9L24 C2
9L25 C3
9L26 C2
9L27 C2
9L28 C3
9L29 C2
9L30 C3
ILB0 B3
ILB5 C3
ILB6 C3
ILB7 C3

SSB (v2): SPIDER: Tunnel Bus

B6A SPIDER: TUNNELBUS

B6A

7R00-2
SPIDER 2

TUNNELBUS

TUN-SPIDER-RX-DATA0 A2
TUN-SPIDER-RX-DATA1 B2
TUN-SPIDER-RX-DATA2 A1
TUN-SPIDER-RX-DATA3 B6
TUN-SPIDER-RX-DATA4 A3
TUN-SPIDER-RX-DATA5 A4
TUN-SPIDER-RX-DATA6 B5
TUN-SPIDER-RX-DATA7 A5
TUN-SPIDER-RX-DATA8 B11
TUN-SPIDER-RX-DATA9 B3
TUN-SPIDER-RX-DATA10 B12
TUN-SPIDER-RX-DATA11 B7
TUN-SPIDER-RX-DATA12 B8
TUN-SPIDER-RX-DATA13 B9
TUN-SPIDER-RX-DATA14 A9
TUN-SPIDER-RX-DATA15 A10
TUN-SPIDER-RX-BUSY B10
TUN-SPIDER-RX-CLKN A7
TUN-SPIDER-RX-CLKP A6

TUN-RX-DATA0 … TUN-RX-DATA15
TUN-RX-BUSY
TUN-RX-CKAN
TUN-RX-CKAP
TUN_RX_VREF1
TUN_RX_VREF2

TUN-TX-DATA0 … TUN-TX-DATA15
TUN-TX-BUSY
TUN-TX-CKAN
TUN-TX-CKAP
TUN_TX_VREF1

K2 TUN-SPIDER-TX-DATA0 (3R10 47R)
L1 TUN-SPIDER-TX-DATA1 (3R11 47R)
N1 TUN-SPIDER-TX-DATA2 (3R02 47R)
J1 TUN-SPIDER-TX-DATA3 (3R12 47R)
N2 TUN-SPIDER-TX-DATA4 (3R14 47R)
F2 TUN-SPIDER-TX-DATA5 (3R13 47R)
K1 TUN-SPIDER-TX-DATA6 (3R04 47R)
J2 TUN-SPIDER-TX-DATA7 (3R03 47R)
D2 TUN-SPIDER-TX-DATA8 (3R06 47R)
F1 TUN-SPIDER-TX-DATA9 (3R05 47R)
E1 TUN-SPIDER-TX-DATA10 (3R15 47R)
G1 TUN-SPIDER-TX-DATA11 (3R07 47R)
B1 TUN-SPIDER-TX-DATA12 (3R17 47R)
D1 TUN-SPIDER-TX-DATA13 (3R16 47R)
C2 TUN-SPIDER-TX-DATA14 (3R09 47R)
C1 TUN-SPIDER-TX-DATA15 (3R08 47R)
M1 TUN-SPIDER-TX-BUSY (RES 100R 3R88 +2V5-TUN)
H1 TUN-SPIDER-TX-CLKN (100R RES 3R89)
G2 TUN-SPIDER-TX-CLKP (3R71 47R 3R72 47R)
M3 IR34

3R19 47R
3R40 100R RES
IR29
RES 9R25 +2V5-TUN
9R26 +2V5-N
3R00 1K0 2R27 100n RES
3R01 1K0 2R32 100n
3R85 47R 2R62 1n0 2R63 1n0
2R18 100n

PCI-CLK-SPIDER 9R06

7R00-3
SPIDER 2

CONTROL

RESET-TM 3R47 10K
IR24 IR25 9R08 res
7R04 BC847BW
+3V3-SPIDER 3R46 10K
+3V3-SPIDER 3R48 4K7

IR03 Y2 CLK
IR04 A23 RESET
IR05 E22 SCL
IR06 E23 SDA
AB8 BISTEN
IR01 AC8 DIODE_IN
IR00 AC7 DIODE_OUT
H23 INT

TCK D23
TDI G22
TDO G23
TMS F22
TRST F23

JTAG-TCK
JTAG-TD-MOP-SPIDER
9R01 res
JTAG-TD-SPIDER-HDMI
JTAG-TMS
JTAG-TRST

3R43 10K RES
3R44 10K
3R45 10K RES
+3V3-SPIDER

3R37 4K7 res
3R38 4K7 res
SCL-DMA-BUS1 3R39 100R
SDA-DMA-BUS1 3R42 100R

+3V3-SPIDER 3R49 10K res
IRQ-SPIDER IR26 9R17 IR40

8204 000 8422.5

F_15710_045.eps
140905

2R18 C6 IR29 C4
2R27 C3 IR34 C6
2R32 C3 IR40 F4
2R62 C4
2R63 C4
3R00 C3
3R01 C3
3R02 A7
3R03 B6
3R04 B7
3R05 B6
3R06 B7
3R07 B6
3R08 B6
3R09 B7
3R10 A7
3R11 A6
3R12 A6
3R13 A6
3R14 A7
3R15 B7
3R16 B6
3R17 B7
3R19 B4
3R37 E3
3R38 E3
3R39 F3
3R40 C3
3R42 F3
3R43 F6
3R44 F6
3R45 F7
3R46 D2
3R47 E3
3R48 D3
3R49 F3
3R71 B6
3R72 C7
3R85 C3
3R88 B7
3R89 B7
7R00-2 A5
7R00-3 D5
7R04 E3
9R01 E7
9R06 E4
9R08 E3
9R17 F3
9R25 C2
9R26 C2
IR00 F4
IR01 F4
IR03 E4
IR04 E4
IR05 E4
IR06 E4
IR24 E2
IR25 E3
IR26 F3

SSB (v2): SPIDER: DDR

2R01 B5	2R04 B6	2R08 F7	2R15 B7	2R19 B8	2R42 B7	2R83 E1	2RA2 B5	3R21 E5	3R51 D4	3R54 D4	3R57 E4	3R60 D5	3R63 D5	3R66 E6	3R69 E6	3R74 E5	7R00-4 C3	9R14 E2	IR19 E5	IR41 E2
2R02 B6	2R05 B6	2R10 B7	2R16 B8	2R22 B3	2R43 E1	2R91 E1	2RA3 F7	3R22 F5	3R52 D4	3R55 D4	3R58 D5	3R61 D5	3R64 D5	3R67 B3	3R70 E6	3R75 E2	7R01 C7	9R15 F6	IR27 B3	
2R03 B6	2R07 B7	2R14 B5	2R17 B8	2R26 B3	2R44 B7	2RA1 B5	3R18 E2	3R50 D4	3R53 D4	3R56 D4	3R59 D5	3R62 D5	3R65 E5	3R68 B3	3R73 E4	5R06 A5	9R13 F6	FR18 A7	IR28 E7	

B6B SPIDER: DDR

B6B

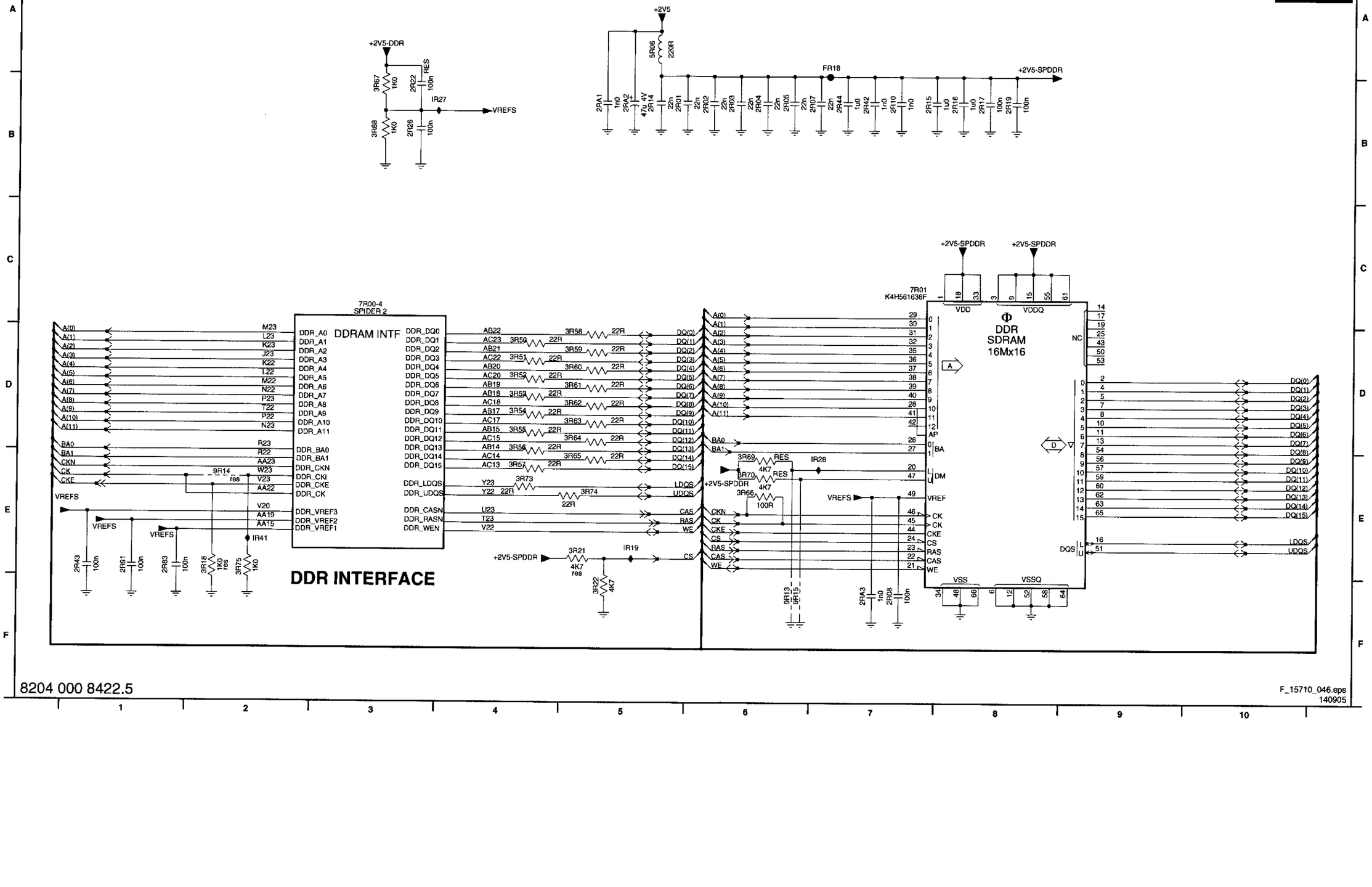

8204 000 8422.5

F_15710_046.eps
140905

SSB (v2): SPIDER: Supply

2R00 E7	2R20 D4	2R29 D3	2R36 D2	2R47 B2	2R53 E8	2R59 D7	2R67 D7	2R73 D8	2R79 E2	2R87 E3	2R94 E6	2RA4 D5	2RB2 D9	5R02 C7	FR11 D5
2R06 E7	2R21 D4	2R30 D3	2R37 D5	2R48 E6	2R54 C2	2R60 D7	2R68 D7	2R74 D8	2R80 D8	2R88 E3	2R95 E4	2RA5 D1	2RB3 D9	5R03 B1	FR12 E6
2R09 E4	2R23 D4	2R31 D3	2R38 C1	2R49 E5	2R55 D2	2R61 D9	2R69 D8	2R75 D8	2R81 D8	2R89 E1	2R96 E7	2RA6 D1	2RB5 E8	5R04 C1	FR13 B2
2R11 E7	2R24 D1	2R33 D2	2R40 B1	2R50 E5	2R56 D6	2R64 D7	2R70 D8	2R76 E1	2R82 E2	2R90 E3	2R97 E4	2RA7 D1	2RB6 E8	5R05 D6	FR14 C2
2R12 E7	2R25 D3	2R34 D4	2R41 E4	2R51 E5	2R57 E5	2R65 D7	2R71 D8	2R77 D5	2R84 E2	2R92 E3	2R98 E4	2RA8 D1	5R00 C1	7R00-5 A2	FR15 C2
2R13 E1	2R28 D3	2R35 D2	2R46 E6	2R52 E5	2R58 D6	2R66 D8	2R72 D9	2R78 E2	2R86 E2	2R93 E1	2R99 E6	2RA9 D7	5R01 D2	FR10 C9	FR58 D8

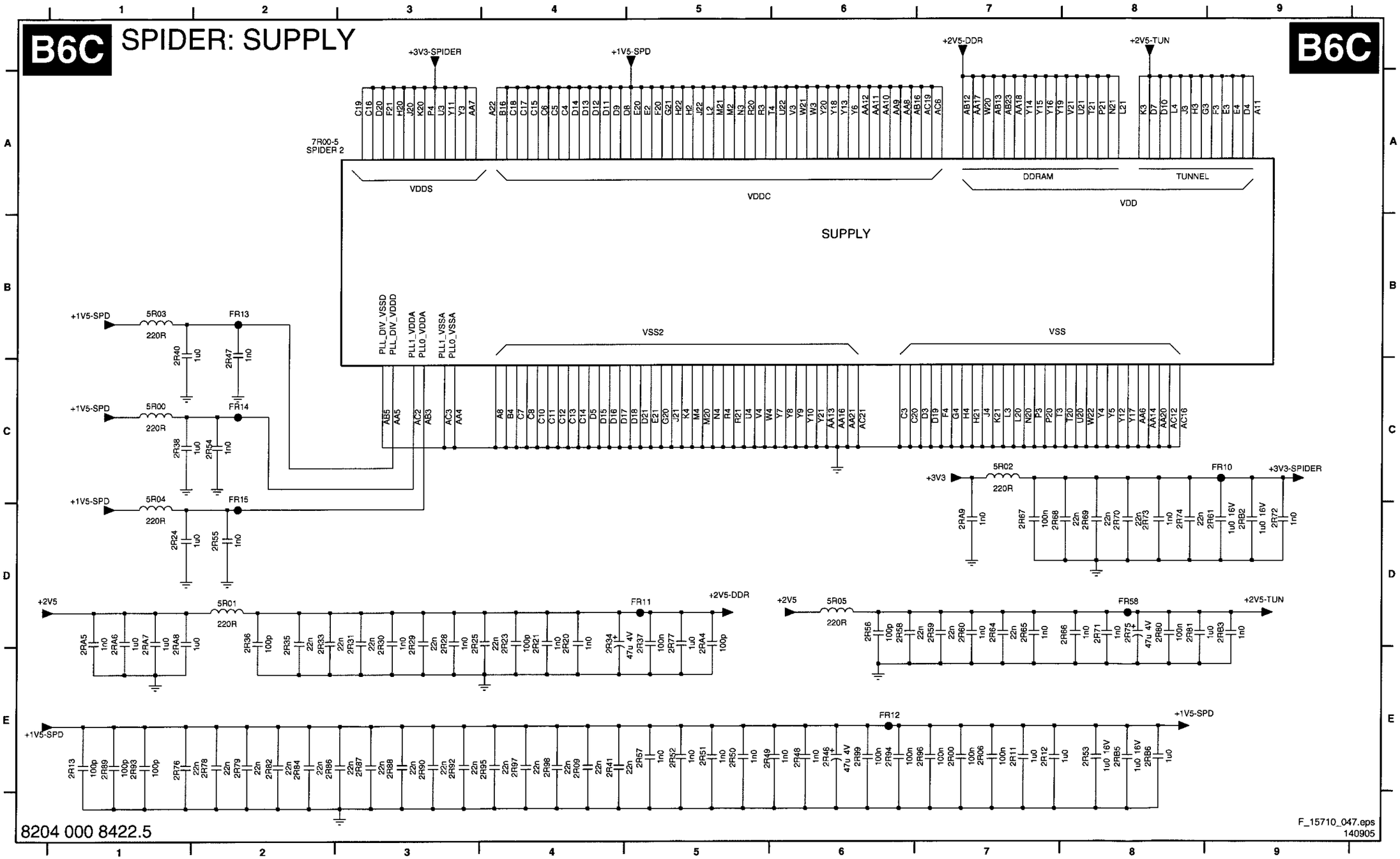

SSB (v2): SPIDER: Debug

B6D SPIDER: DEBUG

B6D

3R80 B3
3R81 C3
3R82 C3
3R83 C3
3R90 C4
7R00-1 A6
9R02 D5
9R03 D5
9R04 D5
9R05 D5
9R20 C3
9R21 C3
9R22 C3
9R23 C4
9R50 D7
9R51 D7
IR07 A7
IR08 A7
IR09 B7
IR10 B7
IR11 B7
IR12 B7
IR13 B7
IR14 B7
IR15 B7
IR16 B7
IR17 B7
IR18 B7
IR20 C7
IR21 C7
IR22 C7
IR23 C7
IR30 B3
IR31 C4
IR32 C4
IR33 C4

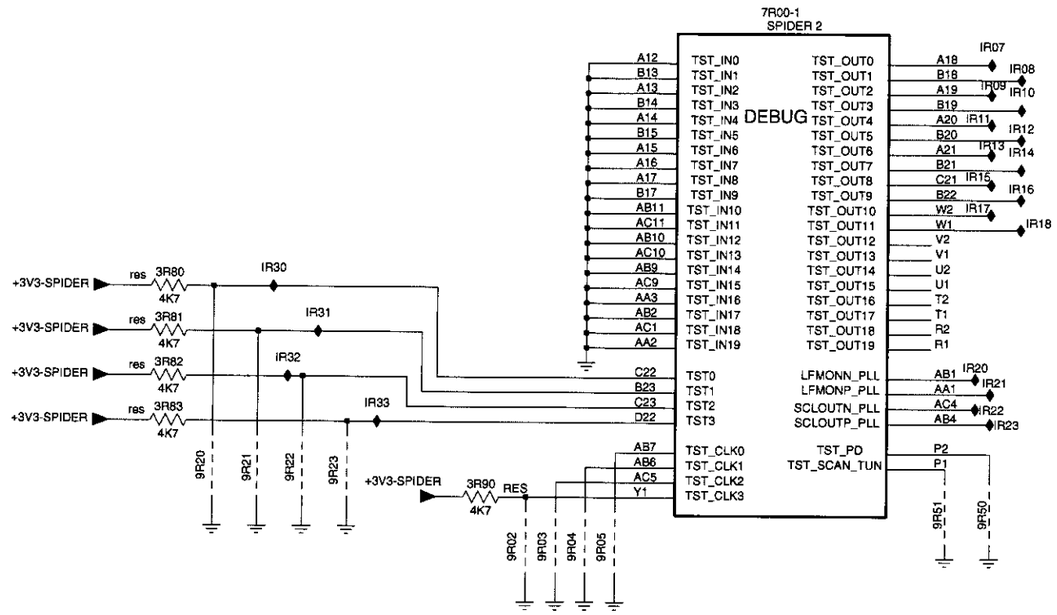

8204 000 8422.5

F_15710_048.eps
140905

SSB (v2): VIPER: Control

1H00 A3 2Q01 F12 3H01 C2 3H09 D2 3H14-3 D9 3H17-3 D9 3H70 E9 3H79 A8 3H88 E9 3H97 F1 3Q13 B5 3Q19 H12 3Q25 F12 3Q31 B3 5H04 F14 6H05-1 G13 9H03 B5 9H10 E2 9H16 B5 9H25 D13 9Q07 E11 FQ00 G15 FQ09 G14 IQ04 H12 IQ14 F7 IQ23 G8 IQ31 F1
1H01 F15 2Q41 C2 3H02 D5 3H10 D2 3H14-4 D9 3H29 E3 3H71 C2 3H82 A3 3H89 E12 3H98 B5 3Q20 G12 3Q26 C4 3Q32 B3 6H00 H8 6H05-2 G13 9H04 B2 9H11 E2 9H17 F8 9H26 D13 9Q08 F11 FQ01 G15 FQ30 G8 IQ05 H12 IQ15 F12 IQ24 G8
2H06 H9 2Q67 E13 3H03 D4 3H11 D2 3H15 D2 3H31 E3 3H72 D8 3H83 E2 3H90 B1 3H99 B5 3Q21 H12 3Q27 B1 3Q70 C1 6H01 E1 7Q01 F12 9H05 F5 9H18 D1 9H27 D11 9Q09 F11 FQ02 G15 FQ31 G8 IQ06 H12 IQ16 F12 IQ26 G8
2H07 H10 2Q69 F13 3H04 G8 3H13 D2 3H16 D4 3H33 C2 3H73 A8 3H84 E9 3H93 E9 3Q10 B5 3Q22 H12 3Q28 C3 5H01 H13 6H03 F1 7V00-5 A6 9H06 E5 9H19 D1 9H28 D13 AH10 A8 FQ04 G15 IH02 E4 IQ11 F7 IQ17 F13 IQ27 E8
2H08 A3 2Q70 F14 3H05 G8 3H14-1 D9 3H17-1 D9 3H67 G9 3H74 A8 3H85 E9 3H94 H8 3Q11 A5 3Q17 H12 3Q23 H12 3Q29 E13 5H02 H13 6H04-1 H14 9H01 D11 9H07 C2 9H20 D11 9H29 D11 FH12 H8 FQ05 G15 IH09 D1 IQ12 F8 IQ21 F13 IQ28 F8
2H09 A3 3H00 C2 3H08 D4 3H14-2 D9 3H17-2 D9 3H69 G10 3H75 A4 3H87 E2 3H95 H8 3Q12 B5 3Q18 H12 3Q24 E11 3Q30 E13 5H03 F13 6H04-2 H13 9H02 D2 9H08 C2 9H15 F5 9H24 D11 9Q06 E11 FQ06 G15 IQ03 G12 IQ13 E12 IQ22 F8 IQ30 E1

SSB (v2): VIPER: Main Memory

2V00 D6	2V05 H10	2V18 H12	2V22 H12	2V26 H13	2V30 H14	2V34 H7	2V38 H11	2V43 B9	2V47 B11	2V51 B11	3V03 C11	3V07 C11	3V11 D11	3V15 D11	3V19 D11	3V23 D11	3V33 D11	3V37 D11	3V41 D11	3V78 F2	7V01 B7	IV02 G7
2V01 D13	2V06 H10	2V19 H12	2V23 H13	2V27 H13	2V31 H14	2V35 H10	2V40 B8	2V44 B9	2V48 B11	3V00 C9	3V04 C9	3V08 C9	3V12 D9	3V16 D9	3V20 D9	3V24 G3	3V34 D8	3V38 D8	3V42 D8	5V01 G7	7V02 B13	
2V02 D1	2V16 H11	2V20 H12	2V24 H13	2V28 H14	2V32 H9	2V36 H10	2V41 B8	2V45 B9	2V49 B11	3V01 C11	3V05 C11	3V09 C11	3V13 D11	3V17 D11	3V21 D11	3V25 H3	3V35 D11	3V39 D11	3V43 D11	5V02 G7	IQ25 G3	
2V03 H3	2V17 H11	2V21 H12	2V25 H13	2V29 H14	2V33 H7	2V37 H11	2V42 B9	2V46 B10	2V50 B11	3V02 C8	3V06 C8	3V10 D8	3V14 D8	3V18 D8	3V22 D8	3V32 D9	3V36 D9	3V40 D8	3V44 F1	7V00-2 B3	IQ39 D1	

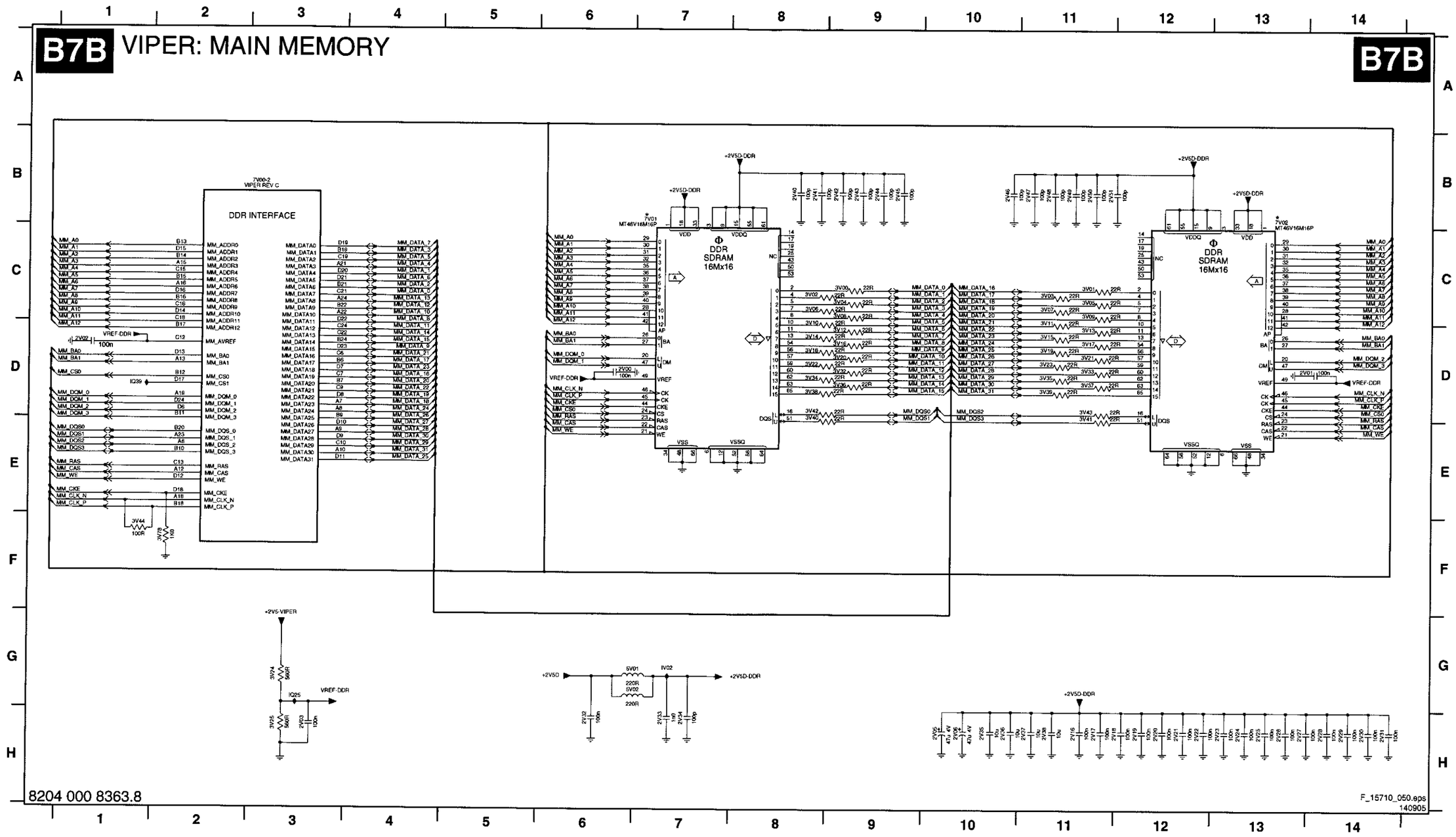

SSB (v2): VIPER: A/V + Tunnel Bus

B7C VIPER: A/V + TUNNELBUS B7C

7V00-1 VIPER REV C

AUDIO/VIDEO

7V00-4 VIPER REV C

TUNNELBUS

2H00 H3
2H01 I6
2H02 H3
2H03 H2
2H12 D11
2H13 D11
2Q25 C11
2Q29 C11
2Q31 C11
3H07 E7
3H12 D10
3H18 D2
3H19 D8
3H20 D8
3H21 D8
3H22 F8
3H28 B2
3H32 C2
3H34-1 A7
3H34-2 A7
3H34-3 A7
3H34-4 A7
3H35-1 C7
3H35-2 C7
3H35-3 B7
3H35-4 B7
3H36-1 C7
3H36-2 C7
3H36-3 B7
3H36-4 B7
3H37-1 B7
3H37-2 B7
3H37-3 B7
3H37-4 B7
3H38-1 C7
3H38-2 C7
3H38-3 C7
3H38-4 C7
3H39-1 C7
3H39-2 C7
3H39-3 C7
3H39-4 C7
3H40-1 B7
3H40-2 B7
3H40-3 B7
3H40-4 B7
3H41-1 B7
3H41-2 B7
3H42 C7
3H44 E7
3H50 H2
3H51 H2
3H65-1 D7
3H65-2 C7
3H65-3 D7
3H65-4 D7
3H92 D10
3Q00 C10
3Q01 D10
3Q03 C10
3Q06 C10
3Q33 H5
3Q34 I6
3Q35 H6
3Q36 I5
3Q37 H6
3Q38 I8
3Q39 H5
3Q41 H6
3Q43 H6
3Q45 H5
3Q47 H6
3Q49 H6
3Q51 H5
3Q53 H6
3Q55 H6
3Q57 H5
3Q59 H6
3Q61 I6
3Q63 I5
5H05 H2
5Q05 C11
5Q06 D11
7V00-1 A5
7V00-4 G7
9H09 E8
9H18 D2
9H19 D2
9H20 E8
9H26 G7
9H27 G7
9H29 G6
9H32 E2
9H33 E2
9H34 G6
9H50 F8
9H51 F8
9H52 F8
9H53 F8
9H54 F8
9H55 F8
9H56 E8
9H57 E8
9H59 E8
IH00 E3
IH01 D3
IH03 E3
IH04 F7
IH05 F7
IH06 D8
IH07 D8
IH08 D8
IH10 D4
IH11 D4
IH12 D10
IH13 D11
IH14 D12
IH15 D4
IQ00 C10
IQ01 C11
IQ02 C12
IQ35 H2
IQ36 H3
IQ40 F7

8204 000 8363.8

F_15710_051.eps
140905

SSB (v2): VIPER: Supply

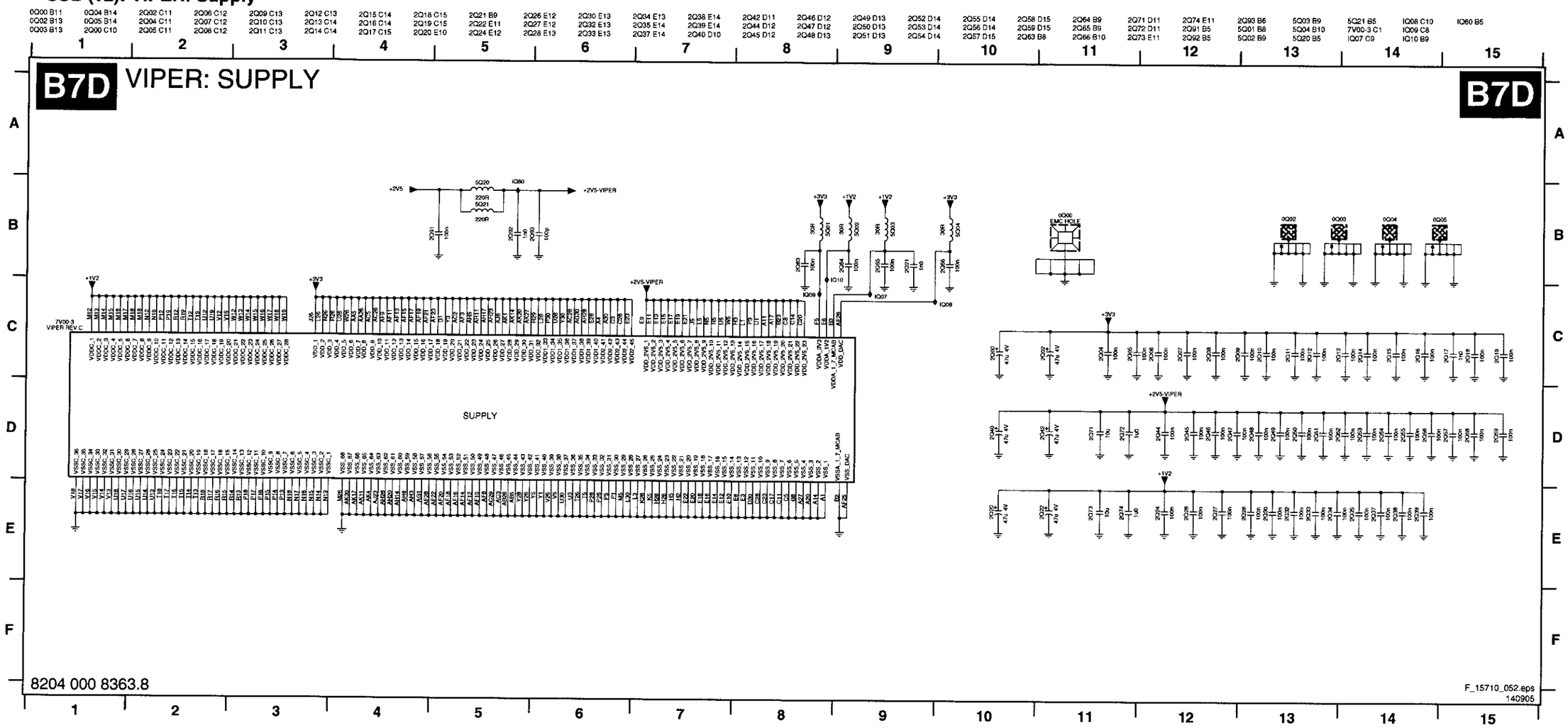

8204 000 8363.8

F_15710_052.eps
140905

SSB (v2): VIPER: Debug

B7E VIPER: DEBUG

B7E

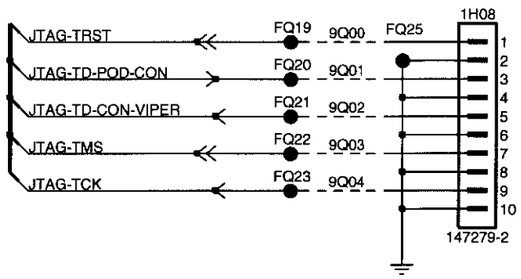

FOR FACTORY USE ONLY

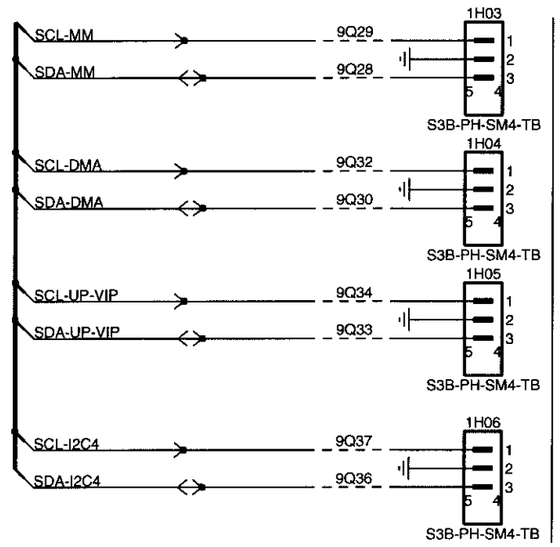

FOR FACTORY USE ONLY

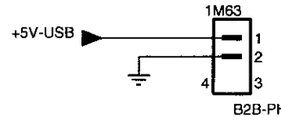

N.C

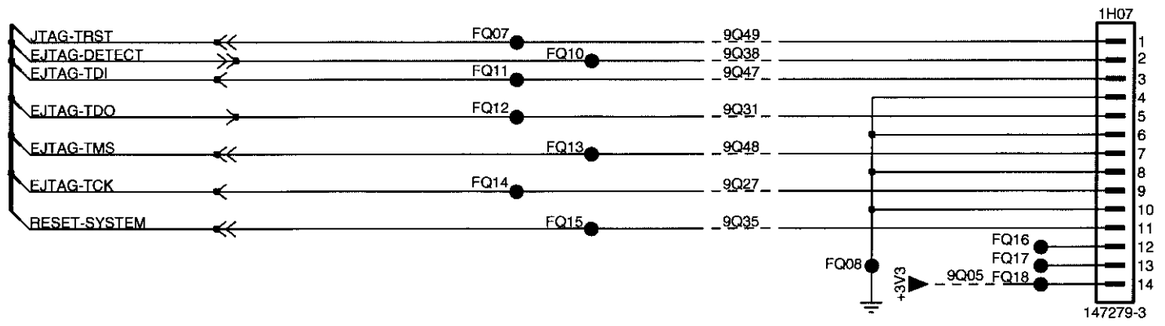

FOR FACTORY USE ONLY

1H03 A6
1H04 B6
1H05 B6
1H06 C6
1H07 D6
1H08 B3
1M63 C6
9Q00 B3
9Q01 B3
9Q02 B3
9Q03 B3
9Q04 B3
9Q05 E5
9Q27 E5
9Q28 A6
9Q29 A6
9Q30 B6
9Q31 D5
9Q32 B6
9Q33 B6
9Q34 B6
9Q35 E5
9Q36 C6
9Q37 C6
9Q38 D5
9Q47 D5
9Q48 D5
9Q49 D5
FQ07 D4
FQ08 E5
FQ10 D4
FQ11 D4
FQ12 D4
FQ13 D4
FQ14 E4
FQ15 E4
FQ16 E6
FQ17 E6
FQ18 E6
FQ19 B3
FQ20 B3
FQ21 B3
FQ22 B3
FQ23 B3
FQ25 B3

8204 000 8363.8

F_15710_053.eps
140905

SSB (v2): UART Switch / Stby Supply / Voltage Detect / I²C

B8A UART SWITCH / STBY SUPPLY / VOLTAGE DETECT / I²C

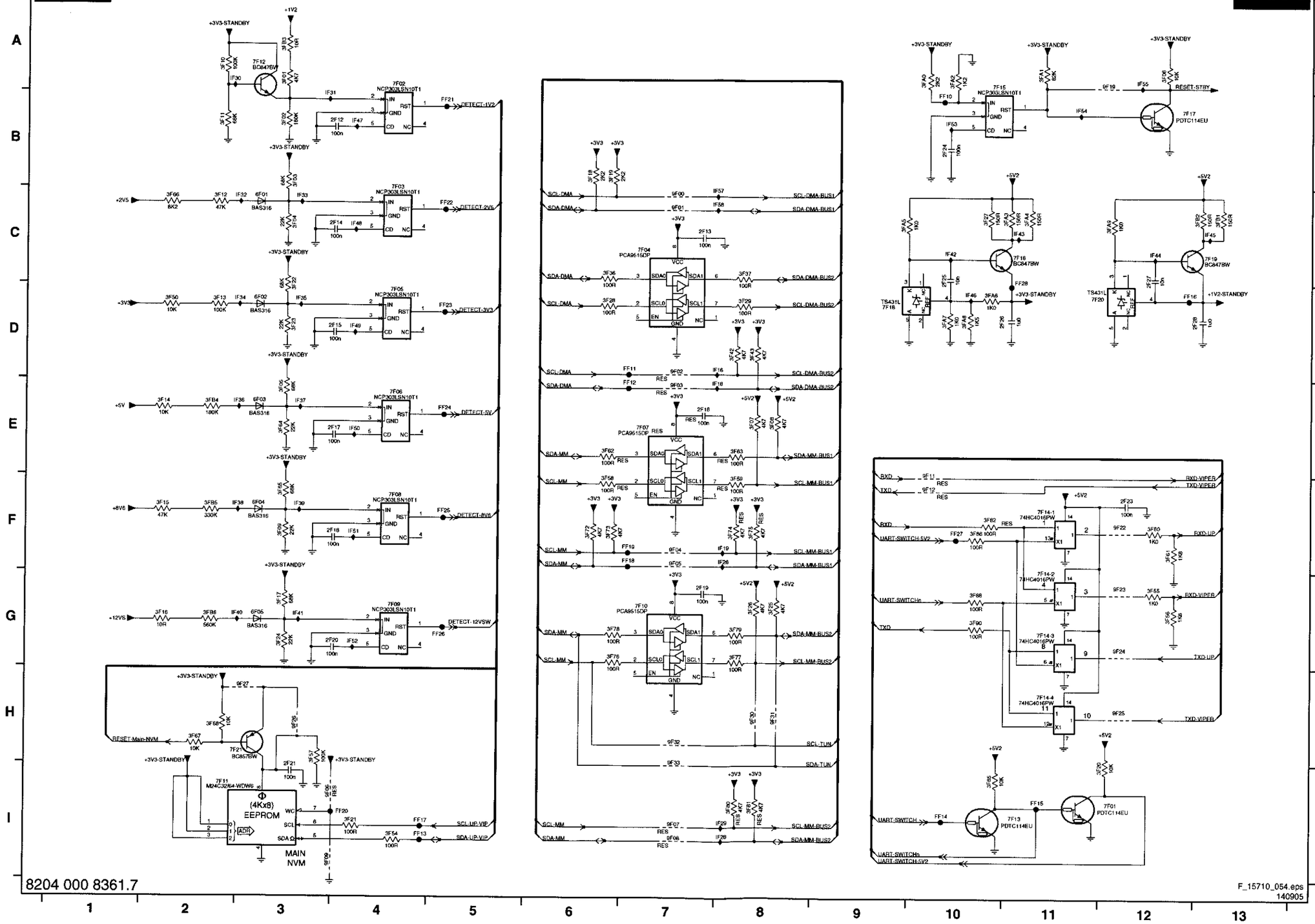

8204 000 8361.7

F_15710_054.eps
140905

2F12 B4	7F03 C4	
2F13 C7	7F04 C7	
2F14 C4	7F05 D4	
2F15 D4	7F06 E4	
2F16 E7	7F07 E7	
2F17 E4	7F08 F4	
2F18 F4	7F09 G4	
2F19 G7	7F10 G7	
2F20 G4	7F11 I2	
2F21 I3	7F12 A3	
2F23 F12	7F13 I11	
2F24 B10	7F14-1 F11	
2F25 C10	7F14-2 G11	
2F26 D10	7F14-3 G11	
2F27 C12	7F14-4 H11	
2F28 D13	7F15 A10	
3F01 A3	7F16 C11	
3F02 B3	7F17 B12	
3F03 B3	7F18 D9	
3F04 C3	7F19 C13	
3F05 E3	7F20 D11	
3F06 A12	7F21 H2	
3F07 E8	9F00 C7	
3F08 E8	9F01 C7	
3F09 F3	9F02 D7	
3F10 A2	9F03 E7	
3F11 B2	9F04 F7	
3F12 C2	9F05 F7	
3F13 D2	9F06 I3	
3F14 E2	9F07 I7	
3F15 F2	9F08 I7	
3F16 G2	9F09 I3	
3F17 G3	9F11 F10	
3F18 B6	9F12 F10	
3F19 B6	9F19 A12	
3F20 I12	9F22 F12	
3F21 I4	9F23 G12	
3F22 D3	9F24 G12	
3F23 D3	9F25 H12	
3F24 G3	9F26 H3	
3F25 G8	9F27 H3	
3F26 G8	9F30 H8	
3F27 C10	9F31 H8	
3F28 D6	9F32 H7	
3F29 D8	9F33 I7	
3F36 C6	FF10 B10	
3F37 C8	FF11 D7	
3F42 D8	FF12 E7	
3F43 D8	FF13 I4	
3F50 D2	FF14 I10	
3F54 I4	FF15 I11	
3F55 G12	FF16 D12	
3F56 G12	FF17 I4	
3F57 H3	FF18 F7	
3F58 F6	FF19 F7	
3F59 F8	FF20 I4	
3F60 F12	FF21 B5	
3F61 F12	FF22 C5	
3F62 E6	FF23 D5	
3F63 E8	FF24 E5	
3F64 E3	FF25 F5	
3F65 F3	FF26 G5	
3F66 C2	FF27 F10	
3F67 H2	FF28 C11	
3F68 H2	IF16 D8	
3F72 F6	IF18 E8	
3F73 F6	IF19 F8	
3F74 F8	IF26 F8	
3F75 F8	IF28 I8	
3F76 G6	IF29 I8	
3F77 G8	IF30 A2	
3F78 G6	IF31 B3	
3F79 G8	IF32 C3	
3F80 I8	IF33 C3	
3F81 I8	IF34 D3	
3F82 F10	IF35 D3	
3F85 I10	IF36 E3	
3F86 F10	IF37 E3	
3F88 G10	IF38 F3	
3F90 G10	IF39 F3	
3FA0 A10	IF40 G3	
3FA1 A11	IF41 G3	
3FA2 A10	IF42 C10	
3FA3 C11	IF43 C11	
3FA4 C11	IF44 C12	
3FA5 C9	IF45 C13	
3FA6 D10	IF46 D10	
3FA7 D10	IF47 B4	
3FA8 D10	IF48 C4	
3FA9 C12	IF49 D4	
3FB1 C13	IF50 E4	
3FB2 C13	IF51 F4	
3FB3 A3	IF52 G4	
3FB4 E2	IF53 B10	
3FB5 F2	IF54 B11	
3FB6 G2	IF55 A12	
6F01 C3	IF57 C8	
6F02 D8	IF58 C8	
6F03 E3		
6F04 F3		
6F05 G3		
7F01 I12		
7F02 A4		

SSB (v2): NAND Flash

B8B NAND FLASH

B8B

2F31 A5
2F32 A6
2F33 C2
2F34 F2
2F35 C8
2F36 D8
2F37 B7
2F38 B7
2F39 A9
2F40 A9
3F30 E9
3F31 D8
3F32 D9
3F33 D8
3F34 D9
3F35 A7
3F38 E8
3F39 B3
3F40 C3
3F41 D5
3F44 F1
3F45 B7
3F46 A8
3F47 B8
3F48 A8
3F70 B8
3F71 B8
5F10 A9
7F50 A2
7F51 F2
7F52 D1
7F53 B5
7F54 D7
7F55-1 B8
7F55-2 B8
9F21 C5
FF30 E9
FF31 D9
FF33 D9
IF10 A8
IF11 B7
IF12 B8
IF13 B8
IF14 B8
IF15 D9
IF17 C5
IF60 F2
IF61 B8

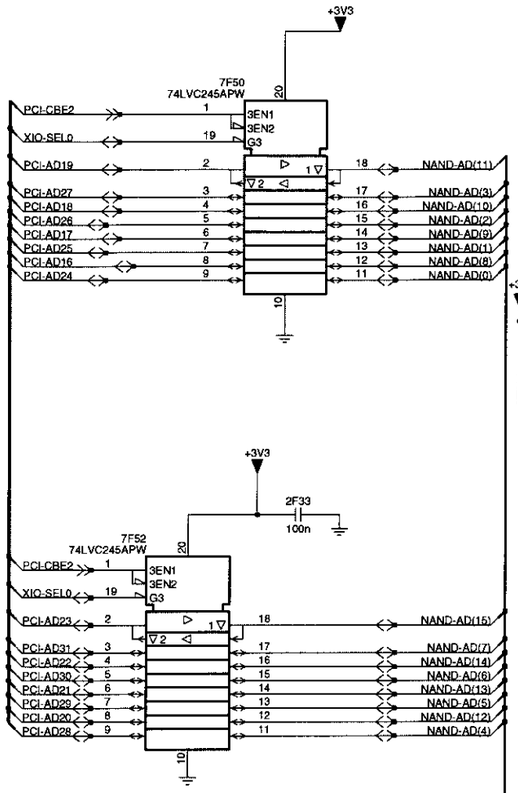

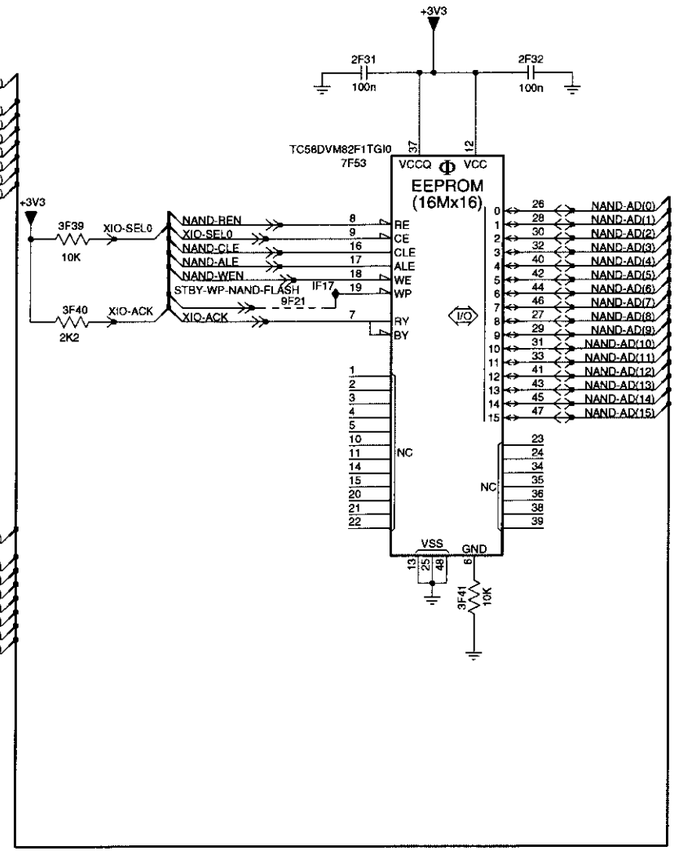

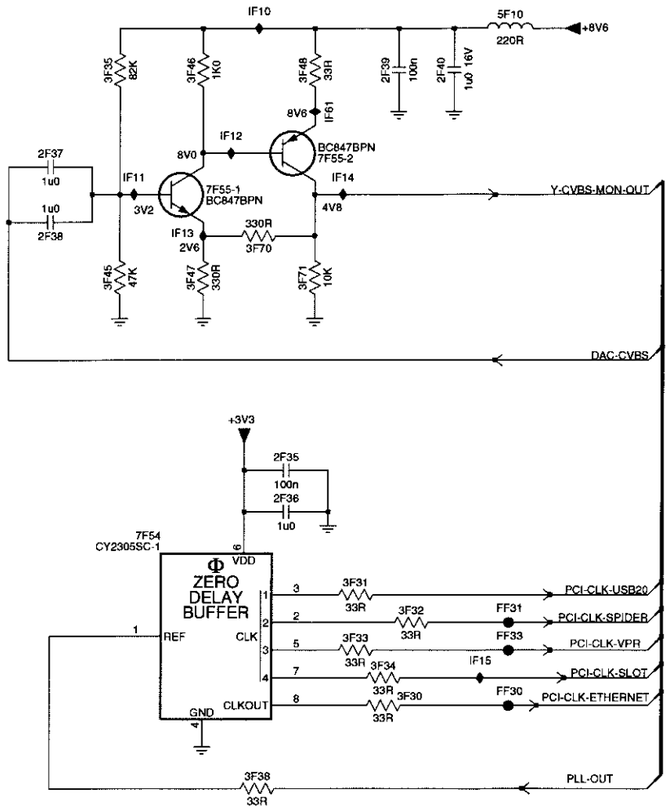

PCI
CLOCK - BUFFER

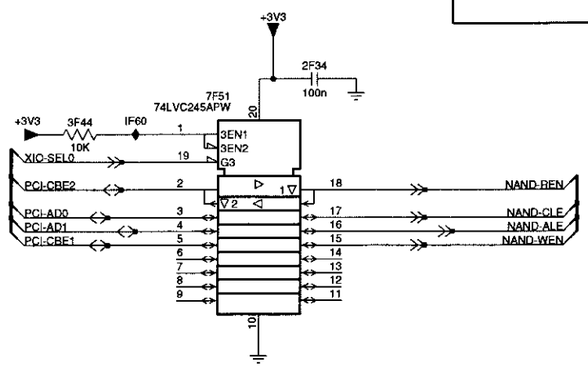

8204 000 8361.7

F_15710_055.eps
140905

SSB (v2): Anti Plop

2F62 B2	3F52 C2	6F62 B2	7F61-2 C2	IF22 C3	IF25 C2	IF59 B2
3F49 B2	3F53 C3	7F60 C1	IF20 B1	IF23 C2	IF27 C2	
3F51 B2	6F61 B1	7F61-1 C2	IF21 C3	IF24 C1	IF56 B1	

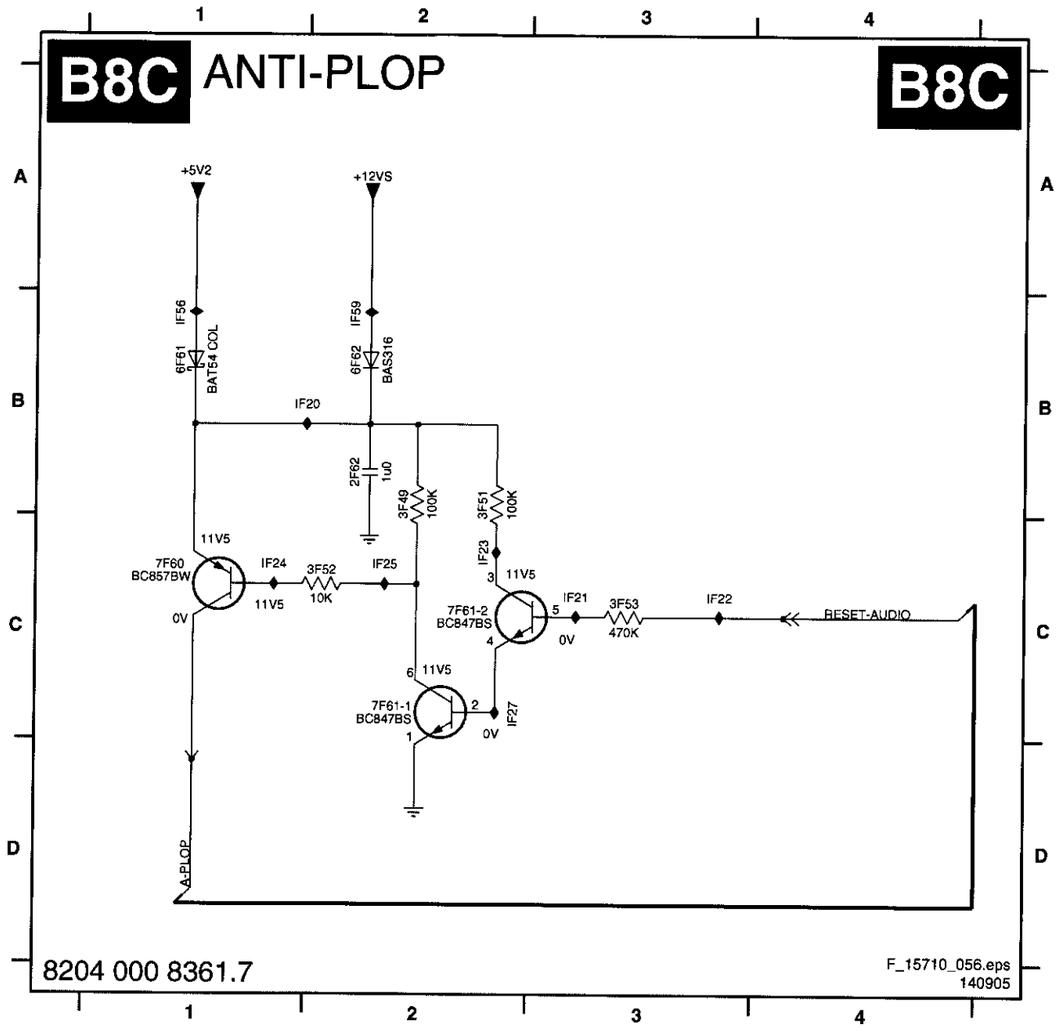

Personal Notes:

E_06532_012.eps
131004

SSB (v2): MOP: Supply

1G02 C11 2G03 A2 2G07 A3 2G11 A1 2G15 B3 2G19 C2 2G23 C2 2G31 A6 2G35 A7 2G39 A10 2G53 D5 2G57 E3 3G01 E4 3G05 G3 3G09 C7 3G13 C10 3G17 D10 5G03 C1 7G02-1 G4 7G04-6 B14 FG02 D11 FG06 C12 FG12 G3 IG09 F3
2G00 A2 2G04 A3 2G08 A3 2G12 B3 2G16 B4 2G20 C2 2G24 C3 2G32 A6 2G36 A7 2G50 A10 2G54 E5 2G58 G4 3G02 F4 3G06 E7 3G10 C9 3G14 C10 5G00 A9 5G16 B3 7G02-2 G4 7G04-1 D8 FG03 C11 FG07 A3 FG33 A11 IG10 F4
2G01 A2 2G05 A4 2G09 A3 2G13 B3 2G17 B3 2G21 C2 2G25 C3 2G33 A6 2G37 A7 2G51 A11 2G55 E4 2G59 F3 3G03 F4 3G07 C6 3G11 C9 3G15 C10 5G01 A5 7G00 B2 7G03 D6 FG01 C11 FG04 C11 FG08 B4 IG12 E4
2G02 A2 2G06 A3 2G10 A4 2G14 B3 2G18 B2 2G22 C2 2G30 A6 2G34 A6 2G38 A7 2G52 A11 2G56 F4 3G00 E4 3G04 F3 3G08 C7 3G12 C10 3G16 C10 5G02 A1 7G01 E4 7G04-1 D8 FG01 C11 FG05 D12 FG09 A8 IG08 E4

B9A MOP: SUPPLY

B9A

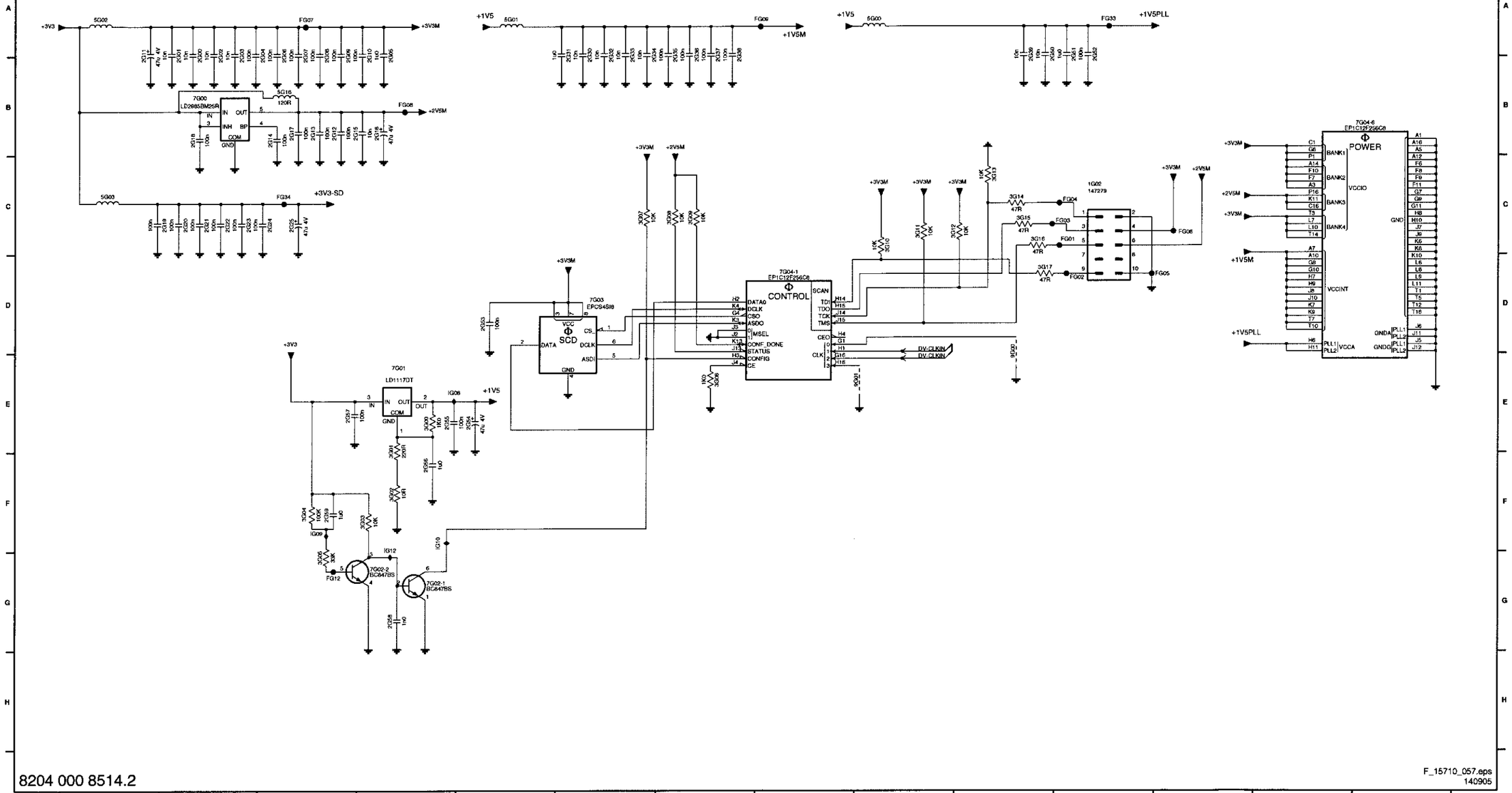

8204 000 8514.2

F_15710_057.eps
140905

SSB (v2): MOP: Control

B9B MOP: CONTROL

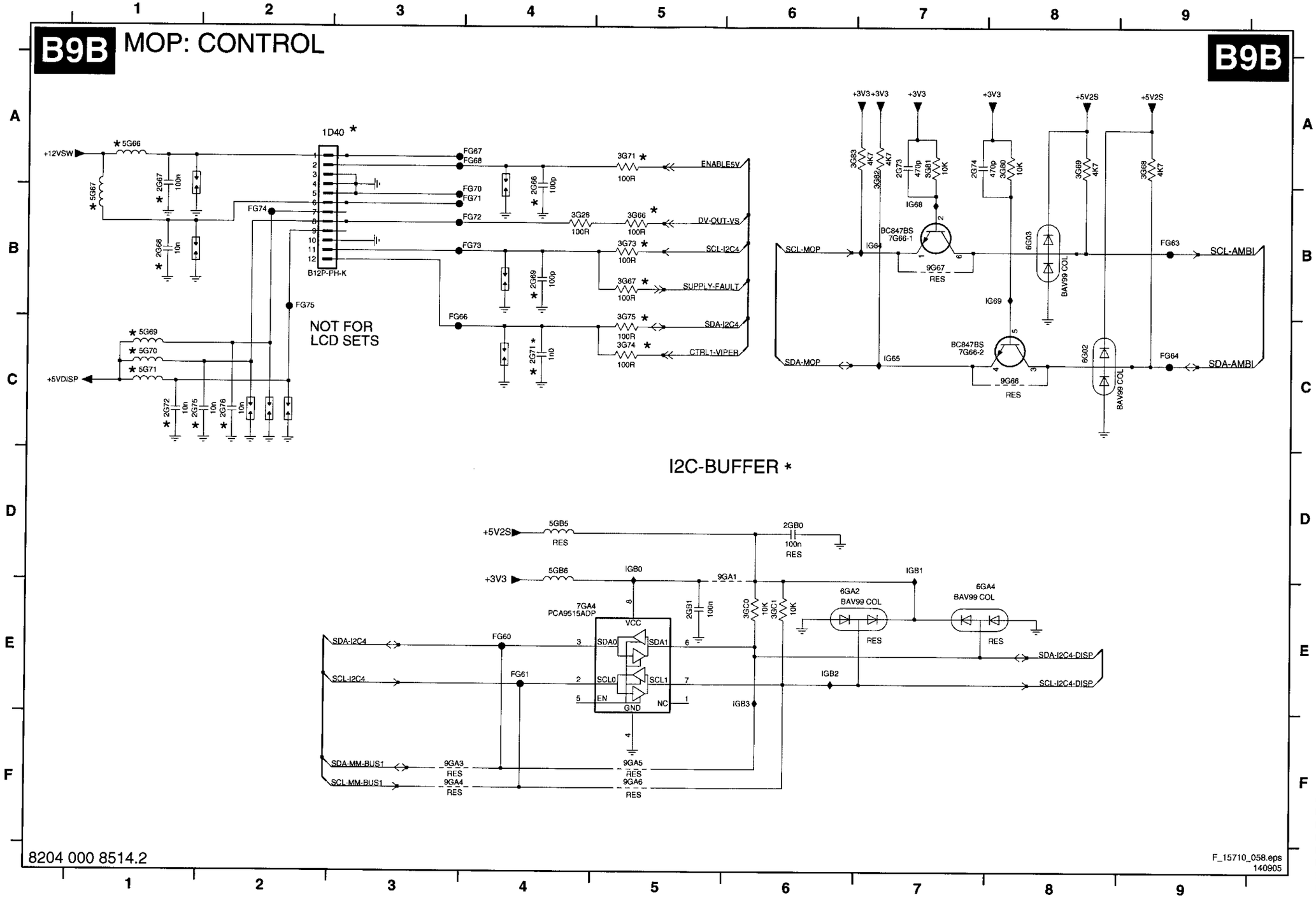

8204 000 8514.2

F_15710_058.eps
140905

1D40 A2 IGB2 E6
2G66 A4 IGB3 E6
2G67 A1
2G68 B1
2G69 B4
2G71 C4
2G72 C1
2G73 A7
2G74 A7
2G75 C1
2G76 C2
2GB0 D6
2GB1 E5
3G28 B4
3G66 B5
3G67 B5
3G68 A9
3G69 A8
3G71 A5
3G73 B5
3G74 C5
3G75 C5
3G80 A8
3G81 A7
3G82 A7
3G83 A6
3GC0 E6
3GC1 E6
5G66 A1
5G67 B1
5G69 C1
5G70 C1
5G71 C1
5GB5 D4
5GB6 D4
6G02 C8
6G03 B8
6GA2 E6
6GA4 E8
7G66-1 B7
7G66-2 C7
7GA4 E5
9G66 C8
9G67 B7
9GA1 D6
9GA3 F3
9GA4 F3
9GA5 F5
9GA6 F5
FG60 E4
FG61 E4
FG63 B9
FG64 C9
FG66 C3
FG67 A4
FG68 A4
FG70 B4
FG71 B4
FG72 B4
FG73 B4
FG74 B2
FG75 B2
IG64 B7
IG65 C7
IG68 B7
IG69 B8
IGB0 D5
IGB1 D7

SSB (v2): MOP: LVDS

B9C MOP: LVDS

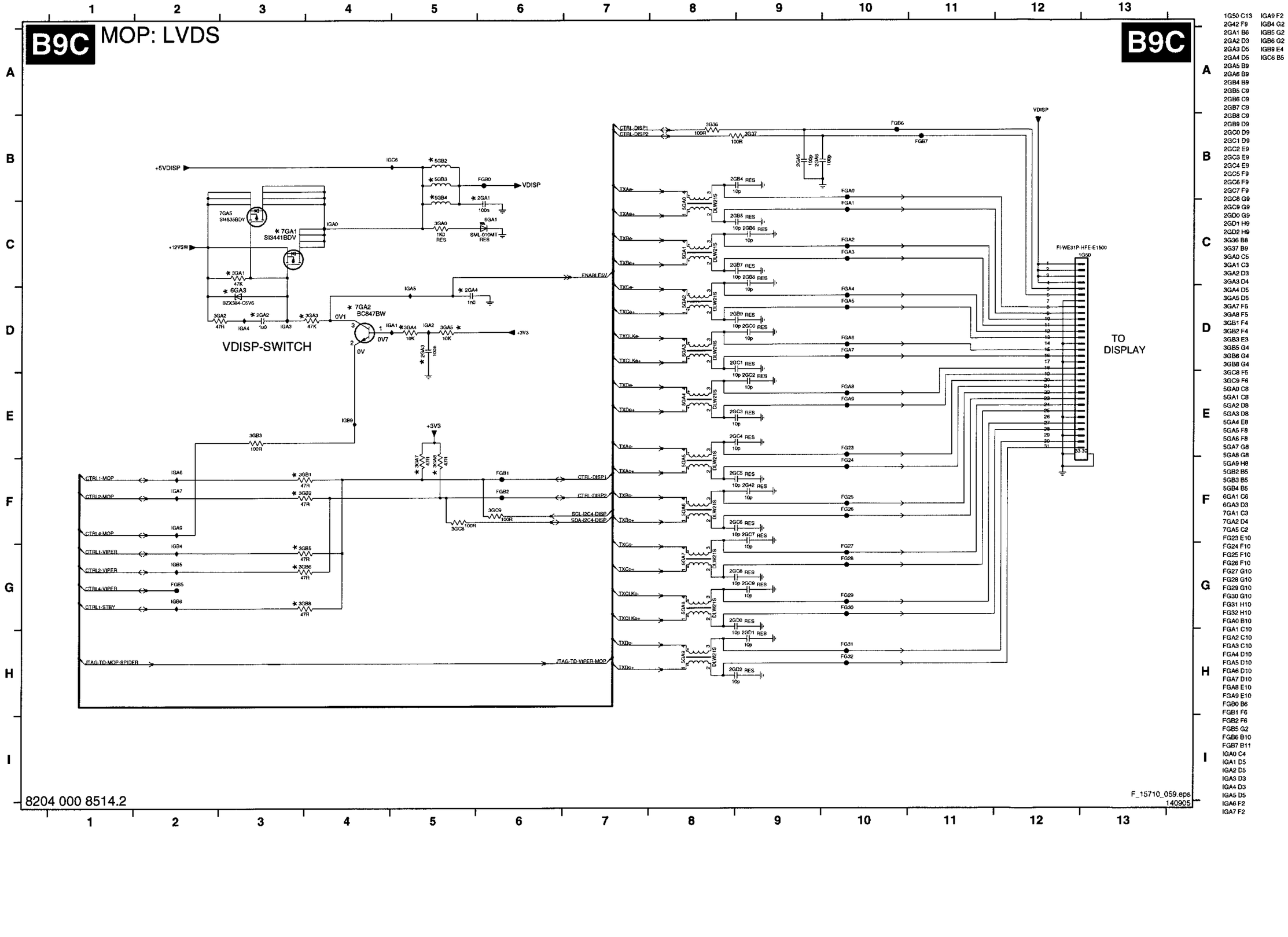

1G50 C13 IGA9 F2
2G42 F9 IGB4 G2
2GA1 B6 IGB5 G2
2GA2 D3 IGB6 G2
2GA3 D5 IGB9 E4
2GA4 D5 IGC6 B5
2GA5 B9
2GA6 B9
2GB4 B9
2GB5 C9
2GB6 C9
2GB7 C9
2GB8 C9
2GB9 D9
2GC0 D9
2GC1 D9
2GC2 E9
2GC3 E9
2GC4 E9
2GC5 F9
2GC6 F9
2GC7 F9
2GC8 G9
2GC9 G9
2GD0 G9
2GD1 H9
2GD2 H9
3G36 B8
3G37 B9
3GA0 C5
3GA1 C3
3GA2 D3
3GA3 D4
3GA4 D5
3GA5 D5
3GA7 F5
3GA8 F5
3GB1 F4
3GB2 F4
3GB3 E3
3GB5 G4
3GB6 G4
3GB8 G4
3GC8 F5
3GC9 F6
5GA0 C8
5GA1 C8
5GA2 D8
5GA3 D8
5GA4 E8
5GA5 F8
5GA6 F8
5GA7 G8
5GA8 G8
5GA9 H8
5GB2 B5
5GB3 B5
5GB4 B5
6GA1 C6
6GA3 D3
7GA1 C3
7GA2 D4
7GA5 C2
FG23 E10
FG24 F10
FG25 F10
FG26 F10
FG27 G10
FG28 G10
FG29 G10
FG30 G10
FG31 H10
FG32 H10
FGA0 B10
FGA1 C10
FGA2 C10
FGA3 C10
FGA4 D10
FGA5 D10
FGA6 D10
FGA7 D10
FGA8 E10
FGA9 E10
FGB0 B6
FGB1 F6
FGB2 F6
FGB5 G2
FGB6 B10
FGB7 B11
IGA0 C4
IGA1 D5
IGA2 D5
IGA3 D3
IGA4 D3
IGA5 D5
IGA6 F2
IGA7 F2

SSB (v2): MOP: I/O

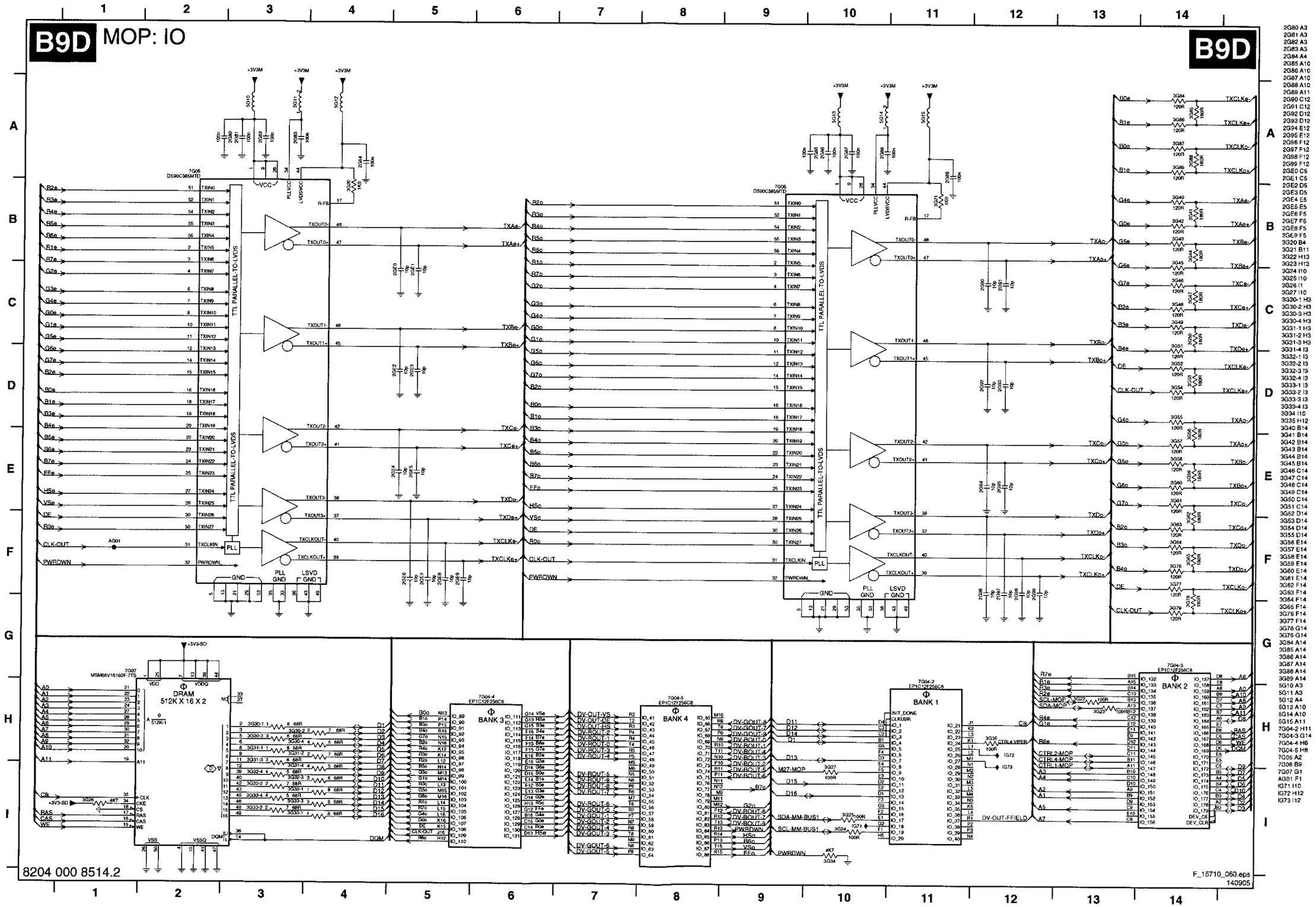
B9D MOP: IO
B9D
TTL PARALLEL-TO-LVDS
DRAM 512K X 16 X 2
BANK 1
BANK 2
BANK 3
BANK 4
8204 000 8514.2
F_15710_060.eps 140905

SSB (v2): HDMI

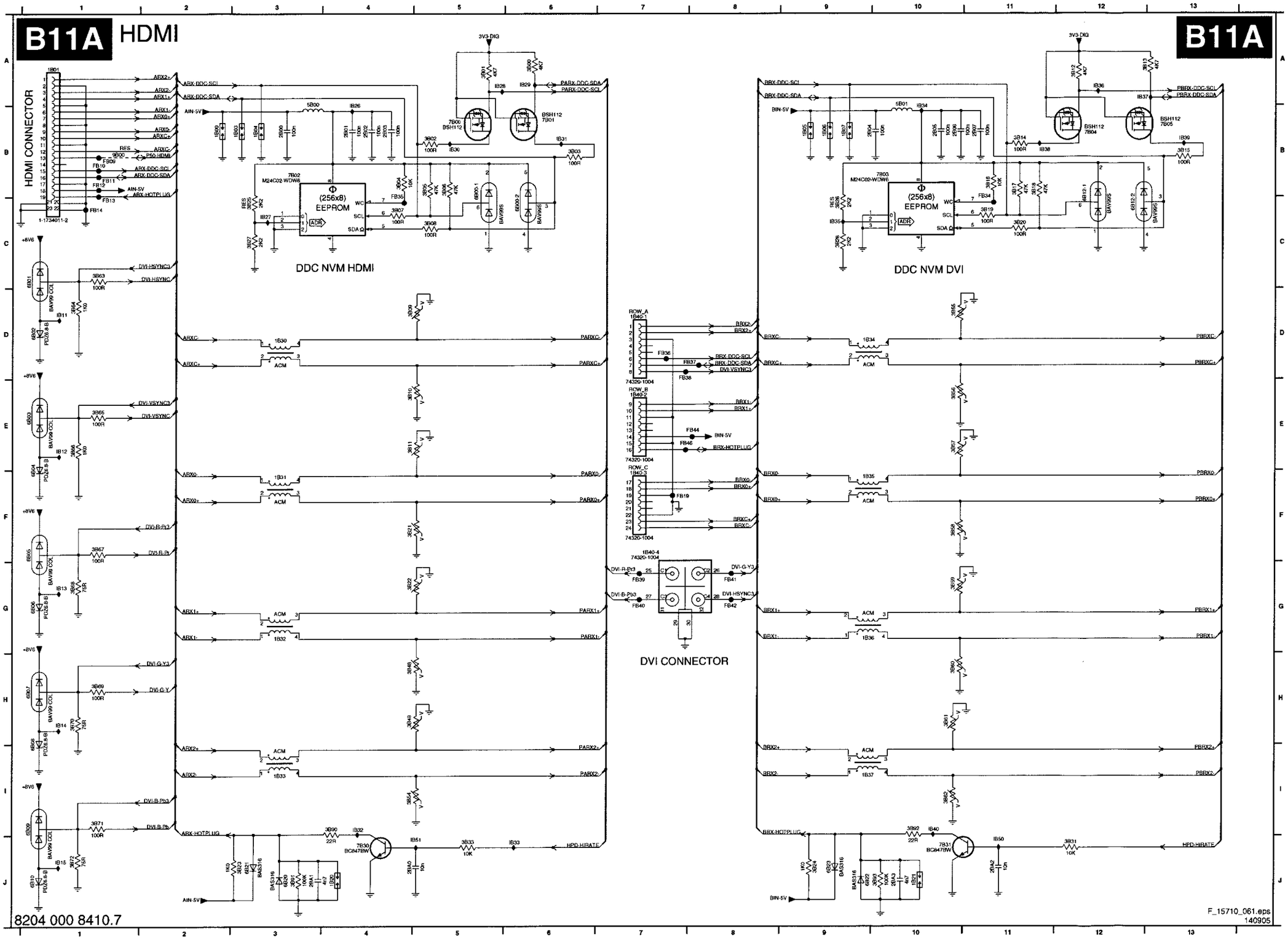

1B00 B2 FB09 B1
1B01 A1 FB10 B1
1B03 B3 FB11 B1
1B04 B3 FB12 B1
1B05 B9 FB13 C1
1B06 B9 FB14 C1
1B07 B9 FB19 F7
1B20 J4 FB34 C11
1B21 J10 FB35 C4
1B30 D3 FB36 D7
1B31 F3 FB37 D8
1B32 G3 FB38 E7
1B33 I3 FB39 G7
1B34 D9 FB40 G7
1B35 F9 FB41 G8
1B36 G9 FB42 G8
1B37 I9 FB44 E8
1B40-1 D7 FB46 E7
1B40-2 E7 IB11 D1
1B40-3 F7 IB12 E1
1B40-4 F7 IB13 G1
2B00 B3 IB14 H1
2B01 B4 IB15 J1
2B02 B4 IB26 A4
2B03 B4 IB27 C3
2B04 B9 IB28 A5
2B05 B10 IB29 A6
2B06 B10 IB30 B5
2B07 B11 IB31 B6
2BA0 J4 IB32 I4
2BA1 J3 IB33 J6
2BA2 J11 IB34 B10
2BA3 J10 IB35 C9
3B00 A6 IB36 A12
3B01 A5 IB37 A12
3B02 B5 IB38 B11
3B03 B6 IB39 B13
3B04 B4 IB40 I10
3B05 B5 IB50 J11
3B06 B5 IB51 J5
3B07 C4
3B08 C5
3B09 D4
3B10 E4
3B11 E4
3B12 A12
3B13 A12
3B14 B11
3B15 B13
3B16 B11
3B17 B11
3B18 B11
3B19 C11
3B20 C11
3B21 F4
3B22 G4
3B23 J3
3B24 J9
3B25 C3
3B26 C9
3B27 C3
3B28 C9
3B31 J12
3B33 J5
3B48 H4
3B49 H4
3B54 I4
3B55 D10
3B56 E10
3B57 E10
3B58 F10
3B59 G10
3B60 H10
3B61 H10
3B62 I10
3B63 C1
3B64 D1
3B65 E1
3B66 E1
3B67 F1
3B68 G1
3B69 H1
3B70 H1
3B71 I1
3B72 J1
3B90 I4
3B91 J3
3B92 I10
3B93 J10
5B00 B3
5B01 B10
6B00-1 B5
6B00-2 C6
6B01 C1
6B02 D1
6B03 E1
6B04 E1
6B05 F1
6B06 G1
6B07 H1
6B08 H1
6B09 I1
6B10 J1
6B12-1 B12
6B12-2 C12
6B20 J3
6B21 J3
6B22 J9
6B23 J9
7B00 B5
7B01 B6
7B02 B3
7B03 B10
7B04 B12
7B05 B13
7B30 J4
7B31 J10
9B00 B1

SSB (v2): HDMI: I/O + Control

B11B HDMI: I/O + CONTROL

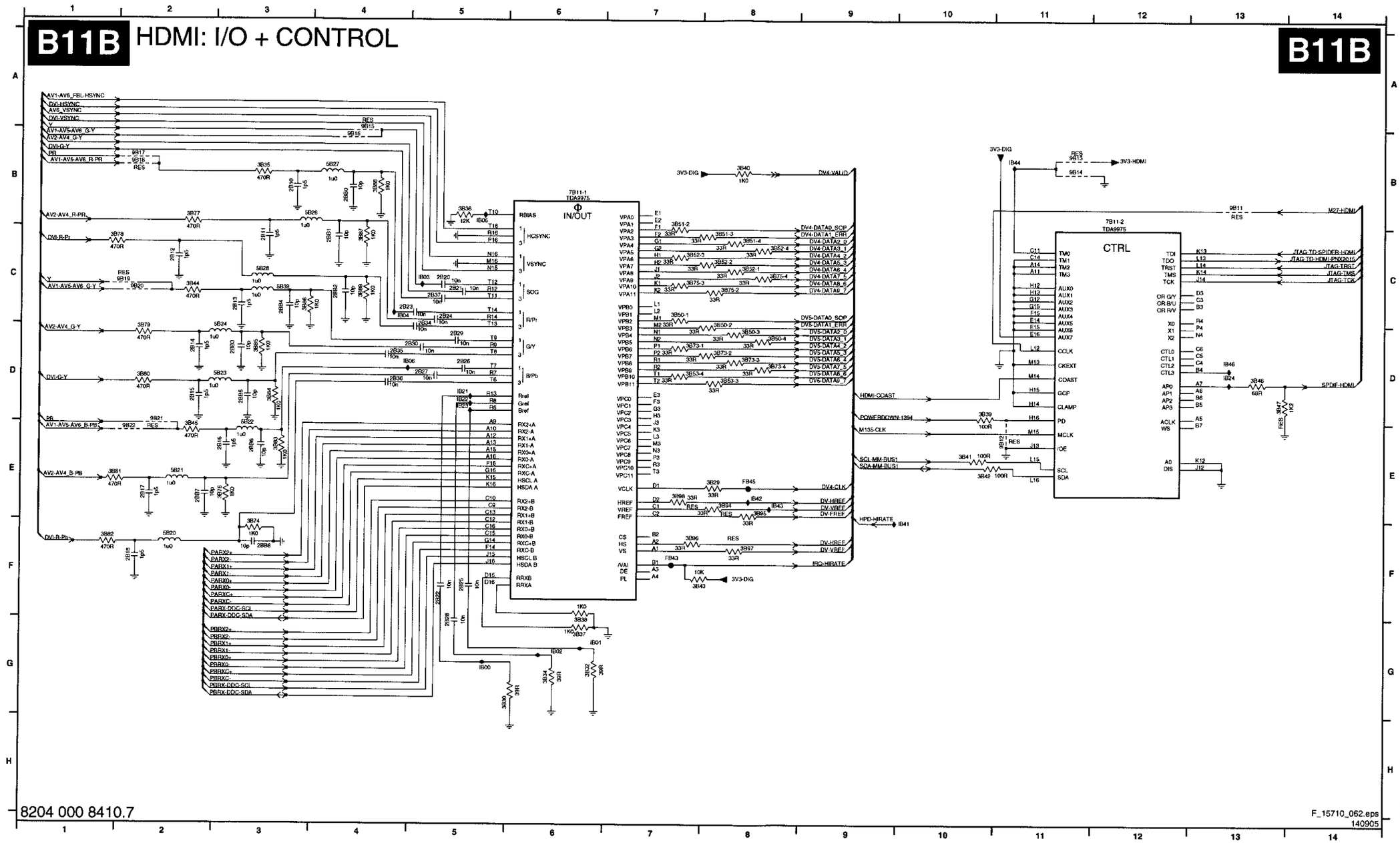

2B10 B3	3B82 F1	3B51-2 B7	
2B11 C3	3B83 E3	3B51-3 C8	
2B12 C2	3B84 D3	3B51-4 C8	
2B13 C3	3B85 D3	3B52-1 C8	
2B14 D2	3B86 C3	3B52-2 C8	
2B15 D2	3B87 C4	3B52-3 C7	
2B16 E3	3B88 B4	3B52-4 C8	
2B17 E2	3B89 C4	3B53-3 D8	
2B18 F2	3B94 E8	3B53-4 D7	
2B20 C5	3B95 E8	3B73-1 D7	
2B21 C5	3B96 F7	3B73-2 D8	
2B22 F5	3B97 F8	3B73-3 D8	
2B23 C4	3B98 E7	3B73-4 D8	
2B24 C5	5B20 F2	3B74 F3	
2B25 F5	5B21 E2	3B75-2 C8	
2B26 D5	5B22 E3	3B75-3 C7	
2B27 D5	5B23 D3	3B75-4 C8	
2B28 G5	5B24 D3	3B76 E3	
2B29 D5	5B26 B3	3B77 B2	
2B30 D5	5B27 B4	3B78 C1	
2B34 D5	5B28 C3	3B79 D2	
2B35 D4	5B39 C3	3B80 D2	
2B36 D4	7B11-1 B6	3B81 E1	
2B37 C5	7B11-2 B12		
2B80 B4	9B11 B13		
2B81 C4	9B12 E11		
2B82 C4	9B13 B11		
2B83 D3	9B14 B11		
2B84 C3	9B15 B4		
2B85 D3	9B16 B4		
2B86 E3	9B17 B2		
2B87 E2	9B18 B2		
2B88 F3	9B19 C2		
3B29 E8	9B20 C2		
3B30 G6	9B21 E2		
3B32 G6	9B22 E2		
3B34 G6	FB43 F7		
3B35 B3	FB45 E8		
3B36 B5	IB00 G5		
3B37 G6	IB01 G6		
3B38 F6	IB02 G6		
3B39 D10	IB03 C5		
3B40 B8	IB04 C4		
3B41 E10	IB05 B5		
3B42 E10	IB06 D4		
3B43 F7	IB21 D5		
3B44 C2	IB22 D5		
3B45 E2	IB23 D5		
3B46 D13	IB24 D13		
3B47 D13	IB41 F10		
3B50-1 C7	IB42 E8		
3B50-2 D8	IB43 E8		
3B50-3 D8	IB44 B11		
3B50-4 D8	IB46 D13		

SSB (v2): HDMI: Supply

B11C HDMI: SUPPLY

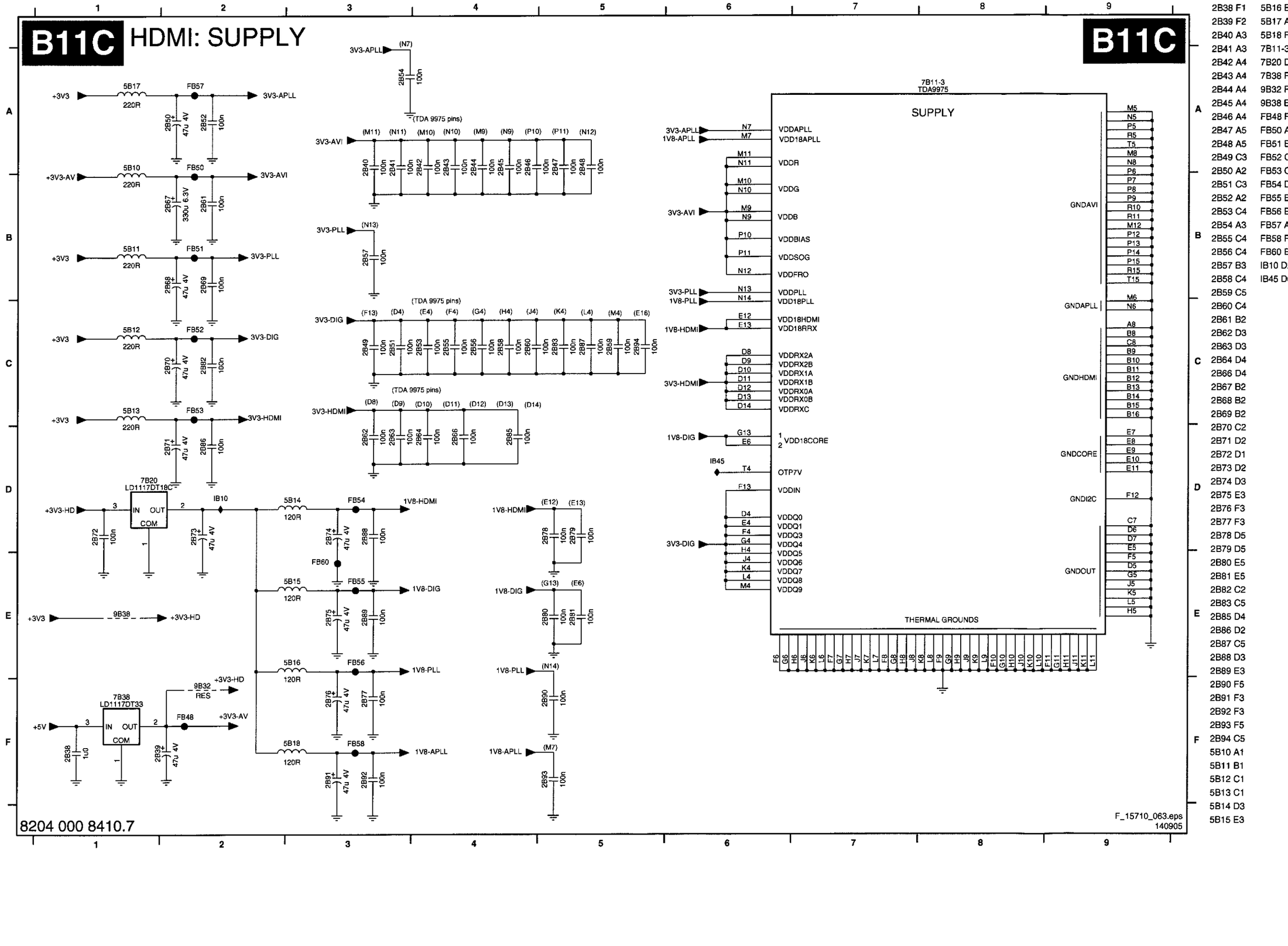

2B38 F1 5B16 E3
2B39 F2 5B17 A1
2B40 A3 5B18 F3
2B41 A3 7B11-3 A8
2B42 A4 7B20 D1
2B43 A4 7B38 F1
2B44 A4 9B32 F2
2B45 A4 9B38 E1
2B46 A4 FB48 F2
2B47 A5 FB50 A2
2B48 A5 FB51 B2
2B49 C3 FB52 C2
2B50 A2 FB53 C2
2B51 C3 FB54 D3
2B52 A2 FB55 E3
2B53 C4 FB56 E3
2B54 A3 FB57 A2
2B55 C4 FB58 F3
2B56 C4 FB60 E3
2B57 B3 IB10 D2
2B58 C4 IB45 D6
2B59 C5
2B60 C4
2B61 B2
2B62 D3
2B63 D3
2B64 D4
2B66 D4
2B67 B2
2B68 B2
2B69 B2
2B70 C2
2B71 D2
2B72 D1
2B73 D2
2B74 D3
2B75 E3
2B76 F3
2B77 F3
2B78 D5
2B79 D5
2B80 E5
2B81 E5
2B82 C2
2B83 C5
2B85 D4
2B86 D2
2B87 C5
2B88 D3
2B89 E3
2B90 F5
2B91 F3
2B92 F3
2B93 F5
2B94 C5
5B10 A1
5B11 B1
5B12 C1
5B13 C1
5B14 D3
5B15 E3

SSB: I/O: SCART

B12A I/O: SCART

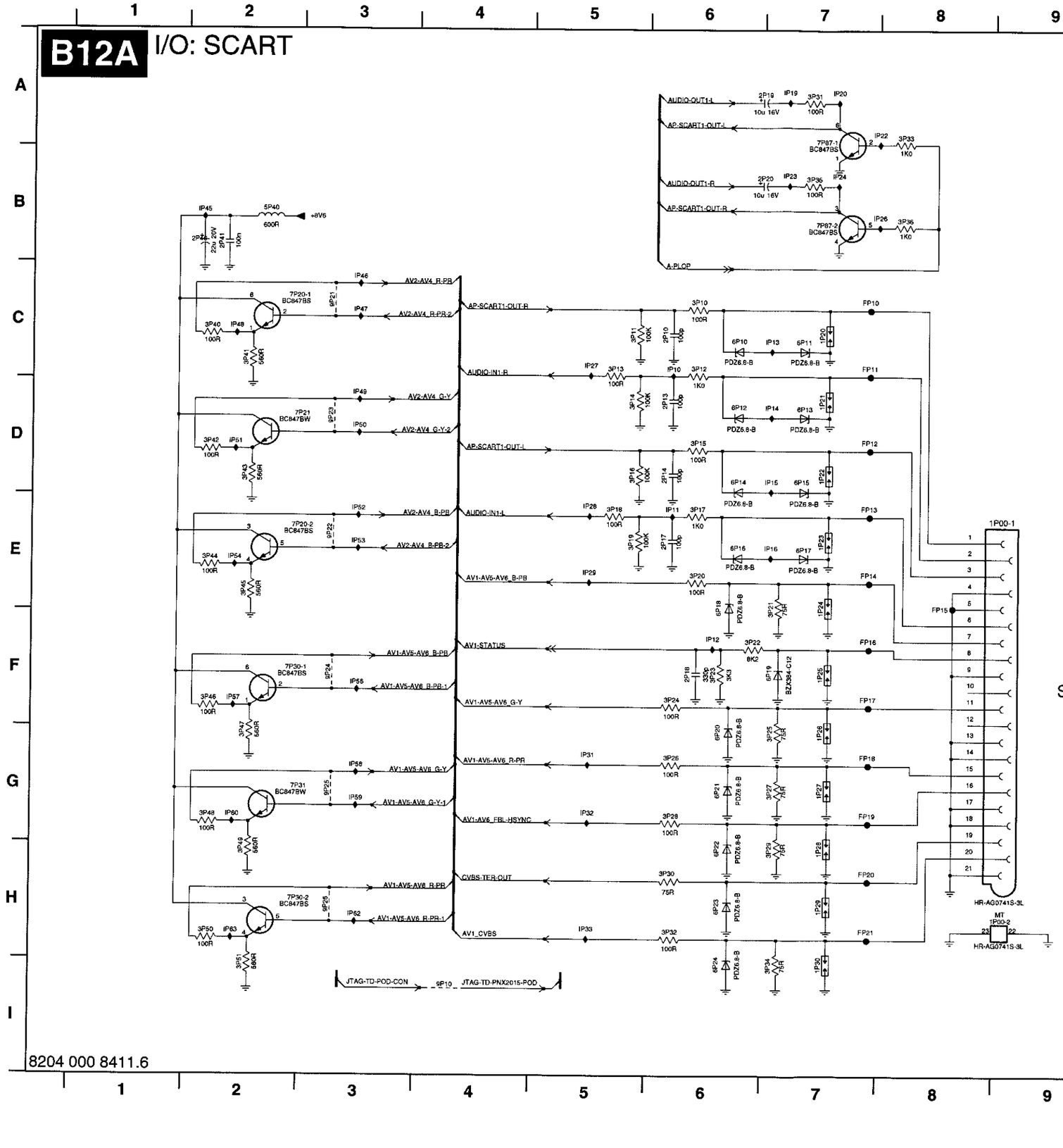

8204 000 8411.6

F_15710_064.eps 190905

1P00-1	E8	FP13	E7
1P00-2	H9	FP14	E7
1P20	C7	FP15	E8
1P21	D7	FP16	F7
1P22	D7	FP17	F7
1P23	E7	FP18	G7
1P24	E7	FP19	G7
1P25	F7	FP20	H7
1P26	G7	FP21	H7
1P27	G7	IP10	C6
1P28	H7	IP11	E6
1P29	H7	IP12	F6
1P30	I7	IP13	C7
2P10	C6	IP14	D7
2P13	D6	IP15	D7
2P14	D6	IP16	E7
2P17	E6	IP19	A7
2P18	F6	IP20	A7
2P19	A6	IP22	A7
2P20	B6	IP23	B7
2P40	B2	IP24	B7
2P41	B2	IP26	B7
3P10	C6	IP27	C5
3P11	C5	IP28	E5
3P12	C6	IP29	E5
3P13	C5	IP30	F5
3P14	D5	IP31	G5
3P15	D6	IP32	G5
3P16	D5	IP33	H5
3P17	E6	IP45	B2
3P18	E5	IP46	C3
3P19	E5	IP47	C3
3P20	E6	IP48	C2
3P21	E7	IP49	D3
3P22	F6	IP50	D3
3P23	F6	IP51	D2
3P24	F6	IP52	E3
3P25	G7	IP53	E3
3P26	G6	IP54	E2
3P27	G7	IP55	F3
3P28	G6	IP56	F3
3P29	H7	IP57	F2
3P30	H6	IP58	G3
3P31	A7	IP59	G3
3P32	H6	IP60	G2
3P33	A8	IP61	H3
3P34	I7	IP62	H3
3P35	B7	IP63	H2
3P36	B8		
3P40	C2		
3P41	C2		
3P42	D2		
3P43	D2		
3P44	E2		
3P45	E2		
3P46	F2		
3P47	G2		
3P48	G2		
3P49	H2		
3P50	H2		
3P51	I2		
5P40	B2		
6P10	C6		
6P11	C7		
6P12	D6		
6P13	D7		
6P14	D6		
6P15	D7		
6P16	E6		
6P17	E7		
6P18	E6		
6P19	F7		
6P20	G6		
6P21	G6		
6P22	H6		
6P23	H6		
6P24	I6		
7P20	C3		
7P20	E3		
7P21	D3		
7P30	F3		
7P30	H3		
7P31	G3		
7P87-1	A7		
7P87-2	B7		
9P10	I4		
9P21	C3		
9P22	E3		
9P23	D3		
9P24	F3		
9P25	G3		
9P26	H3		
FP10	C7		
FP11	C7		
FP12	D7		

SSB: I/O: PCI Debug

1P55-A B3 1P55-B B4 1P55-C B4 1P55-D B1 IP35 B1 IP36 B1 IP37 D1 IP38 B3 IP39 B1 IP40 B1 IP41 B1

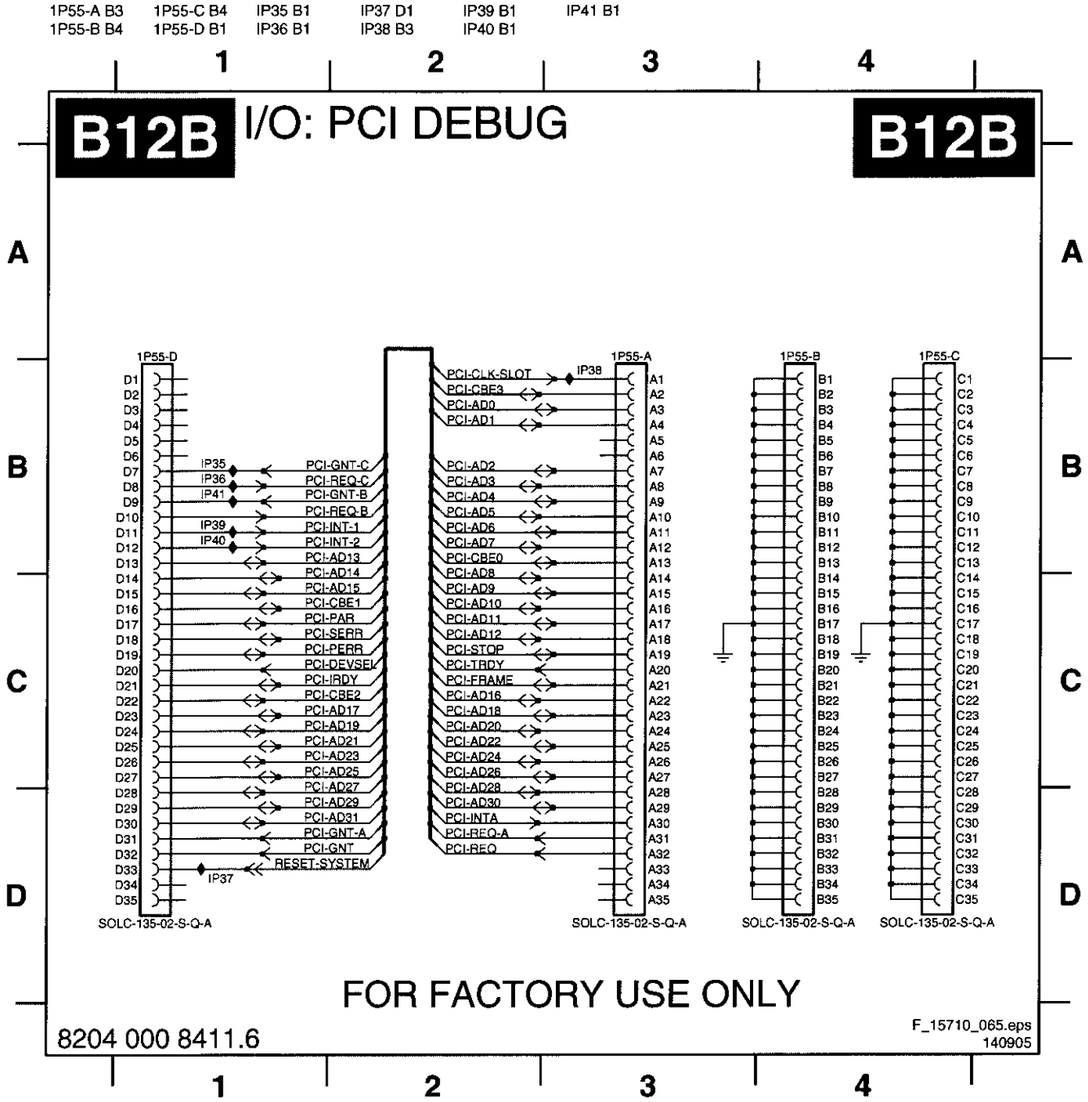

Personal Notes:

E_06532_012.eps
131004

SSB2: USB 2.0: Host

1N00 F8 2N01 F8 2N03 A4 2N05 A4 2N07 A5 2N10 A7 2N12 A4 3N09 C4 3N13 F5 3N15 F5 3N17 F4 3N19 F4 3N25 C1 3N28 F3 3N30 F3 3N32 B4 5N01 A5 7N00 B5 9N24 C3 9N26 C4 IN01 C5 IN03 A6 IN05 D5 IN07 A6
2N00 F8 2N02 A5 2N04 A4 2N06 A4 2N08 A5 2N11 A7 3N08 D4 3N12 F5 3N14 F5 3N16 F4 3N18 F4 3N24 C1 3N27 F3 3N29 F3 3N31 B4 5N00 G6 5N02 A5 9N23 C8 9N25 C4 FN01 F7 IN02 C8 IN04 C4 IN06 F6

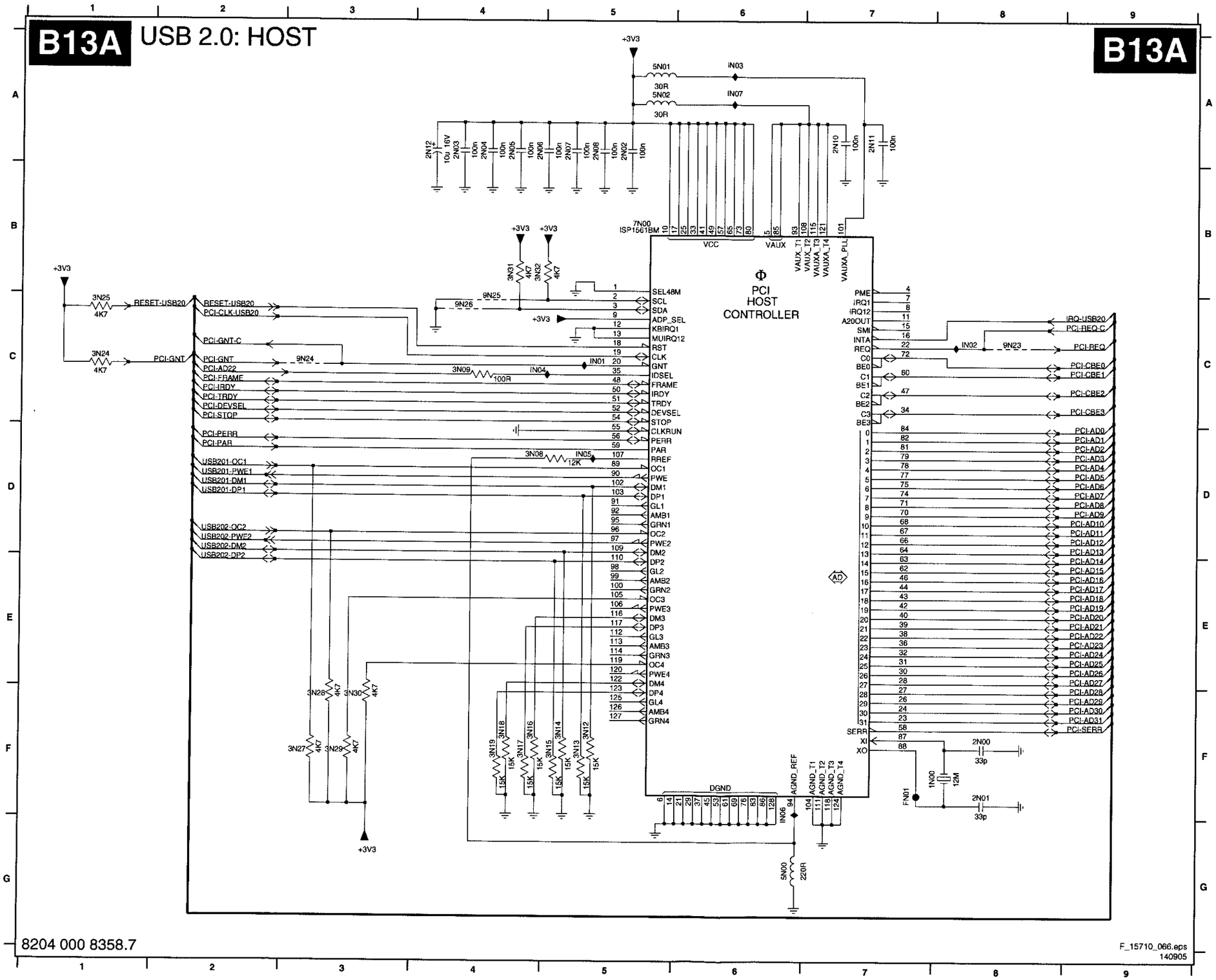

SSB: USB 2.0: PCI Connector

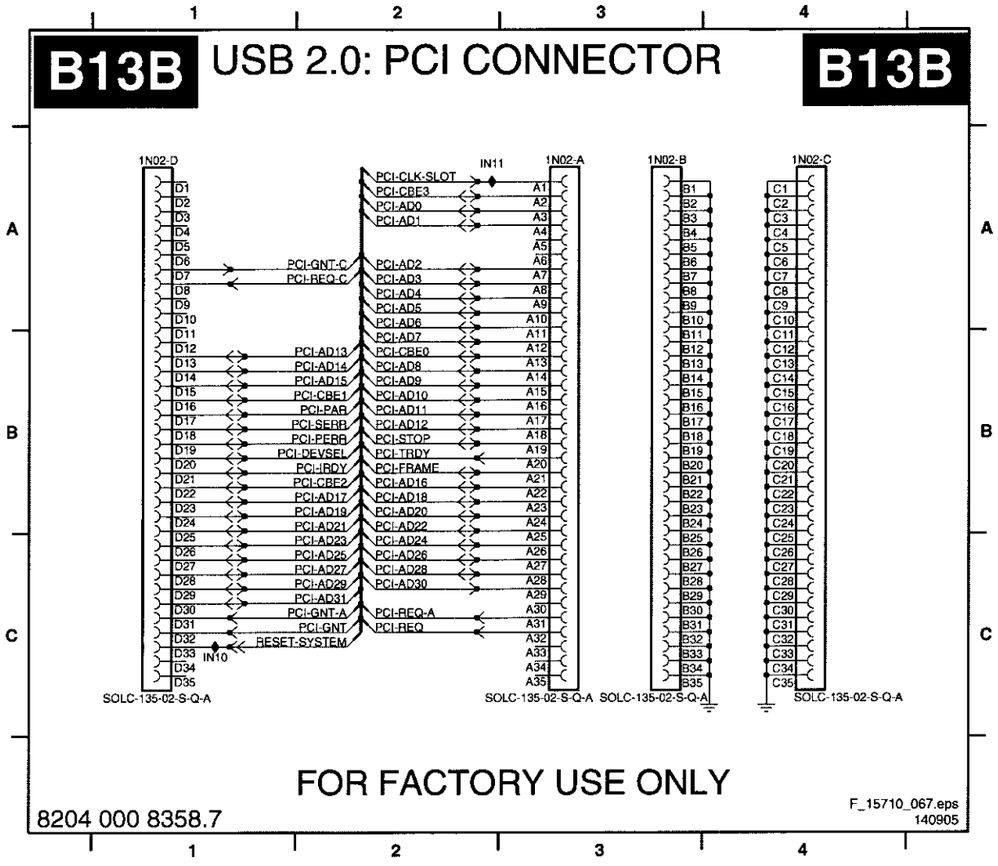

Personal Notes:

E_06532_012.eps
131004

SSB2: Headphone Antiplop

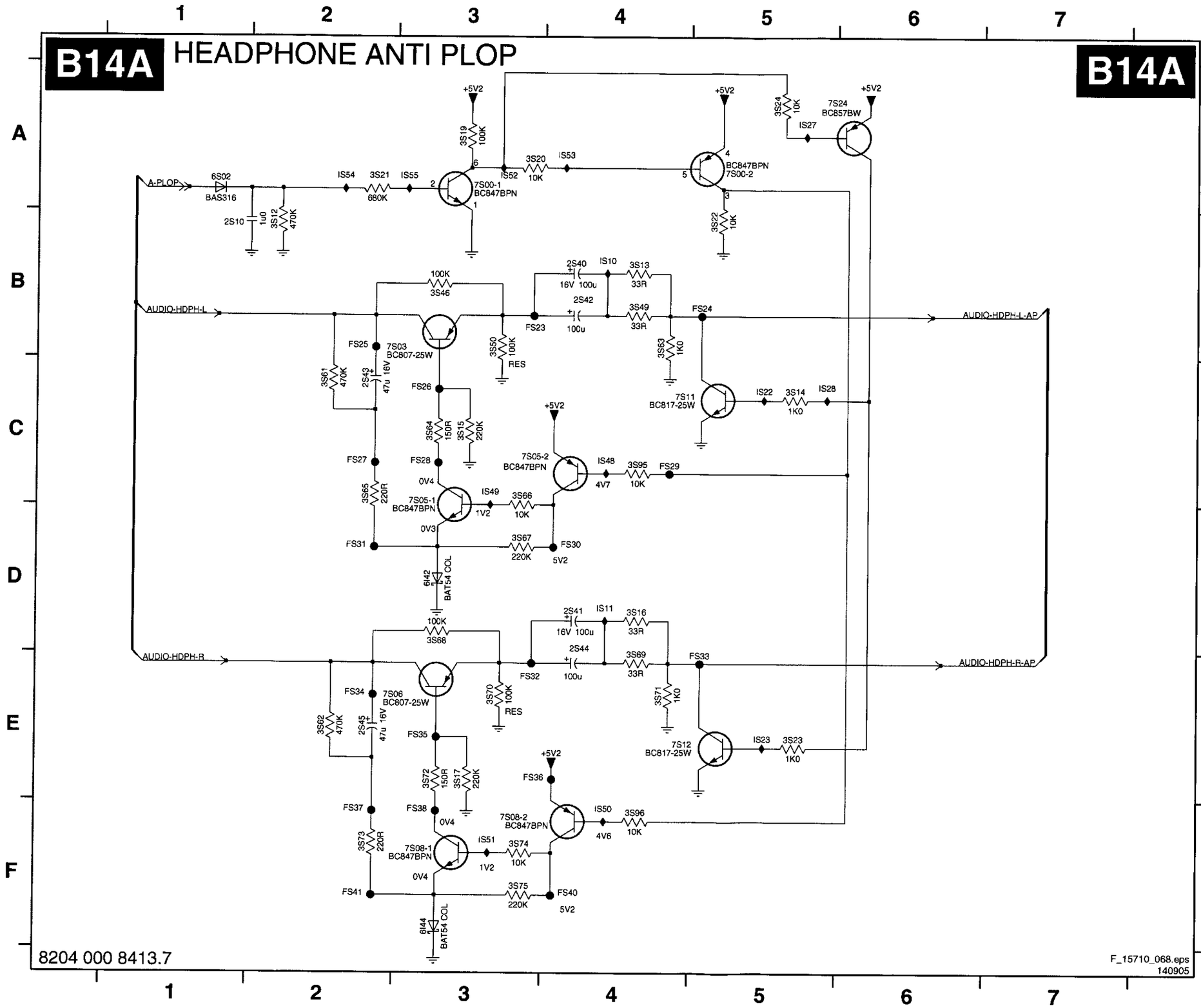

2S10 B1 FS38 F3
2S40 B4 FS40 F4
2S41 D4 FS41 F2
2S42 B4 IS10 B4
2S43 C2 IS11 D4
2S44 D4 IS22 C5
2S45 E2 IS23 E5
3S12 B2 IS27 A5
3S13 B4 IS28 C5
3S14 C5 IS48 C4
3S15 C3 IS49 C3
3S16 D4 IS50 F4
3S17 E3 IS51 F3
3S19 A3 IS52 A3
3S20 A3 IS53 A4
3S21 A2 IS54 A2
3S22 B5 IS55 A3
3S23 E5
3S24 A5
3S46 B3
3S49 B4
3S50 B3
3S61 C2
3S62 E2
3S63 B4
3S64 C3
3S65 C2
3S66 C3
3S67 D3
3S68 D3
3S69 E4
3S70 E3
3S71 E4
3S72 E3
3S73 F2
3S74 F3
3S75 F3
3S95 C4
3S96 F4
6I42 D3
6I44 F3
6S02 A1
7S00-1 A3
7S00-2 A5
7S03 B2
7S05-1 C3
7S05-2 C4
7S06 E2
7S08-1 F3
7S08-2 F3
7S11 C5
7S12 E5
7S24 A5
FS23 B3
FS24 B5
FS25 B2
FS26 C3
FS27 C2
FS28 C3
FS29 C4
FS30 D4
FS31 D2
FS32 E3
FS33 E5
FS34 E2
FS35 E3
FS36 E3
FS37 F2

SSB: I/O + Gemstar

B14B I/O + GEMSTAR

B14B

DIGITAL AUDIO OUT

DIGITAL AUDIO IN 1

DIGITAL AUDIO IN 2

DVI AUDIO LEFT

DVI AUDIO RIGHT

UART CONNECTORS FOR FACTORY USE

1100-1 B8 FS17 F7
1100-2 E1 FS39 G8
1100-3 C1 FS42 B7
1101 F2 IS01 C7
1102 B2 IS02 C10
1104 C2 IS03 C10
1107-1 C1 IS08 D9
1107-2 E1 IS09 D9
1107-3 C8 IS12 B5
1108 E2 IS14 F2
1110 C8 IS15 C2
1111 C7 IS16 D7
1125 B7 IS17 G3
1131 D7 IS18 G3
1133 D7 IS21 H3
1S51 G9 IS26 B6
1S52 H9 IS32 D7
2101 F3 IS33 B3
2102 A6 IS34 C5
2103 C3 IS35 E3
2105 D5 IS36 D5
2106 D5 IS37 B4
2120 D2 IS38 D4
2121 C5 IS40 C3
2161 C4
2170 B9
2191 G3
2192 H3
2193 H3
2194 H3
2195 H3
2198 G3
2S15 F7
2S16 F6
2S17 G7
2S18 F7
2S19 G6
3102 C6
3104 F3
3105 C3
3116 C3
3122 C6
3123 D6
3125 D6
3126 D6
3127 B3
3128 B4
3129 E3
3130 D4
3142 B6
3143 B5
3167 C8
3168 D9
3S06 G8
3S07 G8
3S08 G5
3S09 H8
3S10 H5
3S11 H8
5101 E3
5102 C6
6102 F3
6103 F3
6104 C3
6105 C3
6106 C6
6107 C6
6132 D7
6134 D7
6136 D7
6138 D7
6143 B6
6160 D3
6161 E3
6162 B3
6163 C3
6164 B7
7155 C9
7S04 F6
9132 G5
9133 H5
9145 C10
9146 C10
9191 G2
9192 G2
9194 H2
9S34 H6
9S35 H6
FS00 E1
FS01 E2
FS02 C7
FS04 C2
FS05 C7
FS07 D7
FS08 B2
FS09 D2
FS13 G8
FS14 G8
FS15 H8
FS16 H8

F_15710_069.eps
140905

8204 000 8413.7

SSB: SPDIF

B14C SPDIF

B14C

IO-EXP-1	IO-EXP-2	SPDIF-SEL-OUT1
0	0	SPI-1
0	1	0
1	0	SPI-2
1	1	Option (SPDIF-OPT-IN)

LEVEL CONVERSION

+3V3-AIO
3I58 2R2
IS61
2I58 100n
2I59 100u 4V
3I50 22K
SPDIF-SEL-OUT1
IS66
7I94-1 74HCU04PW
IS67
7I94-2 74HCU04PW
3I51 47K
3I60 68R
SPDIF-IN1
7I94-3 74HCU04PW
7I94-4 74HCU04PW
SPDIF-OUT1
7I94-5 74HCU04PW
7I94-6 74HCU04PW
IS74
9I42
9I20
IS73
SPI-OUT
9I89

+5V-AIO
2I35 100n
9I37 RES
7I90 74HC4053PW
VDD
MDX
Q4
4X1
4X2
VEE
VEE VSS
IS60
3I35 47K
3I36 47K
3I37 47K
3I41 47K
IS62
2I36 100n
2I37 100n
IS63
2I38 100n
IS64
IS65
SPI-1
SPI-2
3I61 75R
3I62 75R
IO-EXP-1
IO-EXP-2
SPDIF-SEL-OUT1
IS70
IS68
IS75
2I41 100n
IS76
SPDIF-OPT-IN
3I64 75R

2I35 C7
2I36 C8
2I37 C8
2I38 C8
2I41 E8
2I58 B1
2I59 B1
3I35 C7
3I36 C7
3I37 C8
3I41 C8
3I50 C2
3I51 C3
3I58 B2
3I60 C4
3I61 D8
3I62 D9
3I64 E8
7I90 C7
7I94-1 C2
7I94-2 C3
7I94-3 D2
7I94-4 D3
7I94-5 E2
7I94-6 E3
9I20 E4
9I37 C6
9I42 E3
9I89 E4
IS60 C8
IS61 B2
IS62 C7
IS63 C8
IS64 C7
IS65 C9
IS66 C1
IS67 C3
IS68 E7
IS70 E6
IS73 E4
IS74 E3
IS75 E7
IS76 E8

8204 000 8413.7

F_15710_070.eps
140905

SSB: Ethernet (Optional)

1000 C7	2002 H3	2006 D12	2012 G8	2016 C8	2020 H11	2024 G11	2028 H12	3003 C7	3007 D1	3011 D8	3021 A8	3025 B8	5000 G8	7000-1 B3	FO02 B9	FO06 F8	IO02 C7	IO06 C8	IO13 E7	IO21 C7
1010 A10	2003 H3	2007 D11	2013 B8	2017 G8	2021 G12	2025 G11	3000 C7	3004 E7	3008 D1	3012 D8	3022 A8	3026 B8	5001 G8	7000-2 H7	FO03 B9	FO07 F8	IO03 H3	IO07 F8	IO14 F7	IO22 C7
2000 D7	2004 A11	2010 E2	2014 B9	2018 G9	2022 H12	2026 H11	3001 C7	3005 F7	3009 A11	3013 D9	3023 A9	3027 C8	6000 F7	9016 C9	FO04 C9	FO08 E3	IO04 G9	IO11 G9	IO15 F7	
2001 D7	2005 A12	2011 G9	2015 B10	2019 H10	2023 H12	2027 H11	3002 D2	3006 F8	3010 C11	3014 D9	3024 A9	3028 C8	6001 F7	FO01 A9	FO05 C10	IO01 E7	IO05 A8	IO12 C11	IO20 A11	

B15 ETHERNET

B15

ETHERNET CONTROLLER

MacPhyter II 10/100 Mb/s

ETHERNET CONNECTOR

8204 000 8414.6

F_15710_071.eps
210905

SSB (v2): Connections A

1M01 G5	1M62 G6	2M07 E9	2M16 E2	2M31 E10	2M66 E13	2M74 D14	2M83 E9	2M97 E1	3M08 D2	3M32 D8	3M42 C5	3M56 C10	5M02 E13	5M10 D11	5M19 E13	5M27 D2	7M01-2 C6	9M03 C14	FM04 F3	FM12 F12	FM20 F11	FM28 F7	FM37 F14	FM45 F3	IM01 B5	IM19 B6	IM28 B7	IM37 C10
1M03 G7	2M00 E12	2M06 E8	2M18 E11	2M47 E2	2M67 E14	2M75 D14	2M85 E9	2M98 E1	3M20 D12	3M34 D9	3M43 C4	3M57 C9	5M03 E14	5M11 D10	5M20 E12	5M28 E15	7M02 C5	9M04 C15	FM05 F2	FM13 F12	FM21 F8	FM29 F7	FM38 F14	FM50 G13	IM02 C5	IM20 C6	IM29 B9	IM40 C15
1M20 G2	2M01 E12	2M10 E12	2M19 E11	2M49 E8	2M68 E14	2M76 D14	2M90 D5	3M01 D3	3M21 D12	3M35 D7	3M44 D9	3M58 C10	5M04 E14	5M12 D11	5M21 E12	5M29 E15	7M06 D7	9M07 D7	FM06 F2	FM14 F12	FM22 F2	FM30 F8	FM39 F7	FM55 G6	IM03 D7	IM21 B2	IM30 B7	IM41 F1
1M36 G12	2M02 E12	2M11 E13	2M20 E2	2M50 E4	2M69 E14	2M77 E15	2M92 D9	3M02 D3	3M24 D1	3M36 D9	3M46 D5	3M60 D1	5M05 E14	5M13 D11	5M22 D9	5M30 F6	7M09 C9	9M08 D6	FM07 F9	FM15 F12	FM23 G13	FM32 F9	FM40 F7	FM62 F1	IM04 C7	IM22 B2	IM31 B11	IM42 D3
1M46 G13	2M03 E6	2M12 E13	2M21 E2	2M51 E2	2M70 E15	2M78 D15	2M93 D10	3M03 D4	3M25 D2	3M37 C7	3M47 D6	3M61 D1	5M06 E14	5M14 D9	5M23 D3	5M31 F5	7M11 C10	9M09 F11	FM08 F12	FM16 F13	FM24 G13	FM33 G4	FM41 F9	FM64 F3	IM05 C9	IM23 B2	IM32 B12	IM44 C15
1M49 G1	2M04 E7	2M13 E12	2M22 D11	2M58 E2	2M71 E15	2M80 D5	2M94 F6	3M04 D8	3M27 D2	3M38 C7	3M50 D4	3M62 D1	5M07 E15	5M15 D10	5M24 D3	5M32 F6	7M12 D6	9M01 C6	FM09 F12	FM17 F10	FM25 G13	FM34 F8	FM42 F3	FM65 F9	IM06 C10	IM24 B2	IM33 B12	IM45 F2
1M51 G1	2M05 E8	2M14 E1	2M29 E10	2M62 E11	2M72 D13	2M81 F4	2M95 C10	3M05 D2	3M30 D6	3M40 B5	3M54 C5	5M00 E13	5M08 E15	5M17 D13	5M25 D3	6M01-2 E4	9M02 C14	FM02 F2	FM10 F10	FM18 F11	FM26 F14	FM35 G13	FM43 F1	FM66 F1	IM08 E6	IM25 B3	IM34 B12	
1M52 G10	2M06 E7	2M15 E1	2M30 E9	2M65 E13	2M73 D13	2M82 F4	2M96 E1	3M07 D3	3M31 D7	3M41 B6	3M55 C9	5M01 E13	5M09 D8	5M18 D12	5M26 D2	7M01-1 B6	9M02 C14	FM03 F4	FM11 F14	FM19 F11	FM27 F14	FM36 G12	FM44 F3	FM67 F1	IM18 C4	IM26 B4	IM36 D9	

B16A CONNECTIONS A

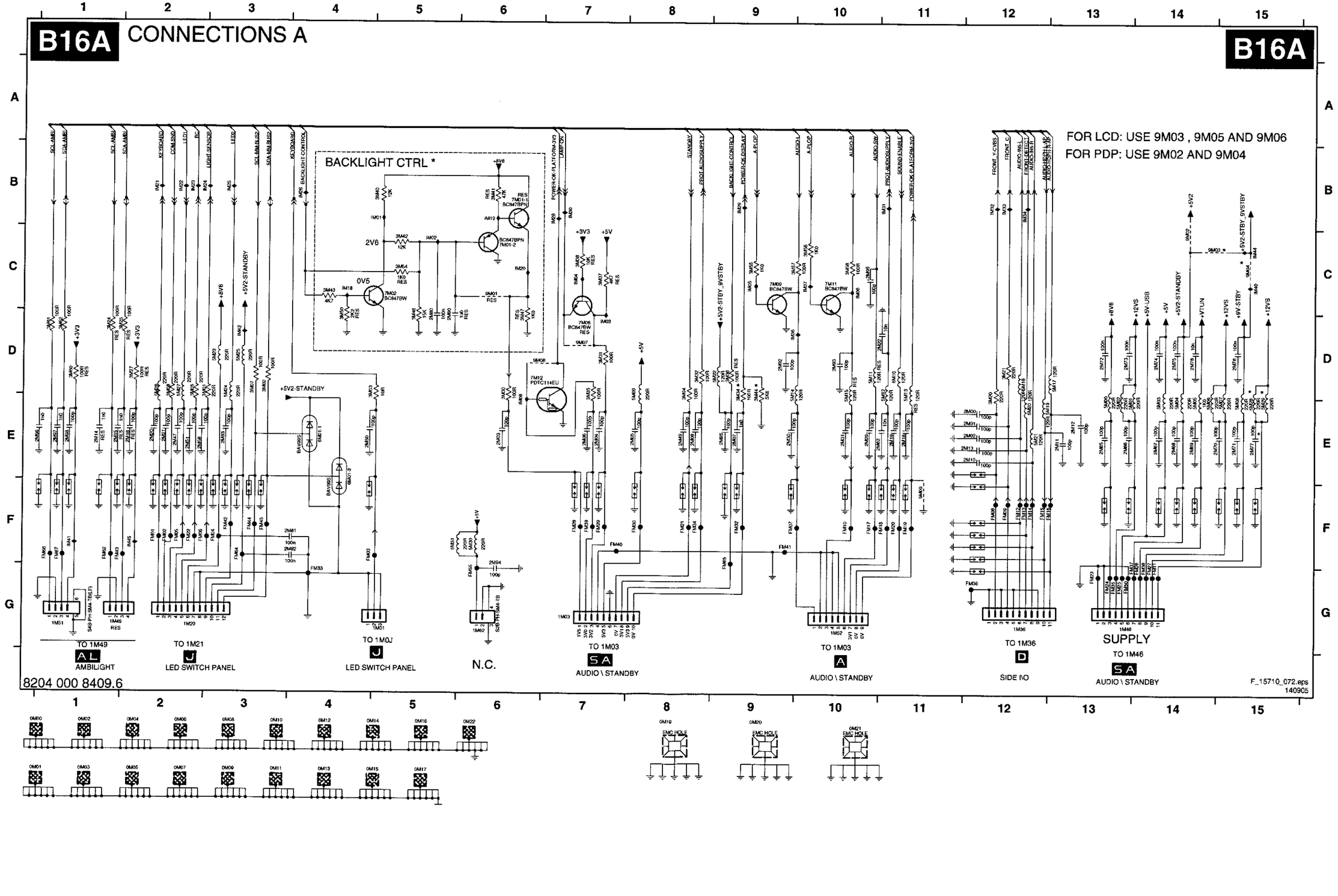

SSB (v2): Connections B

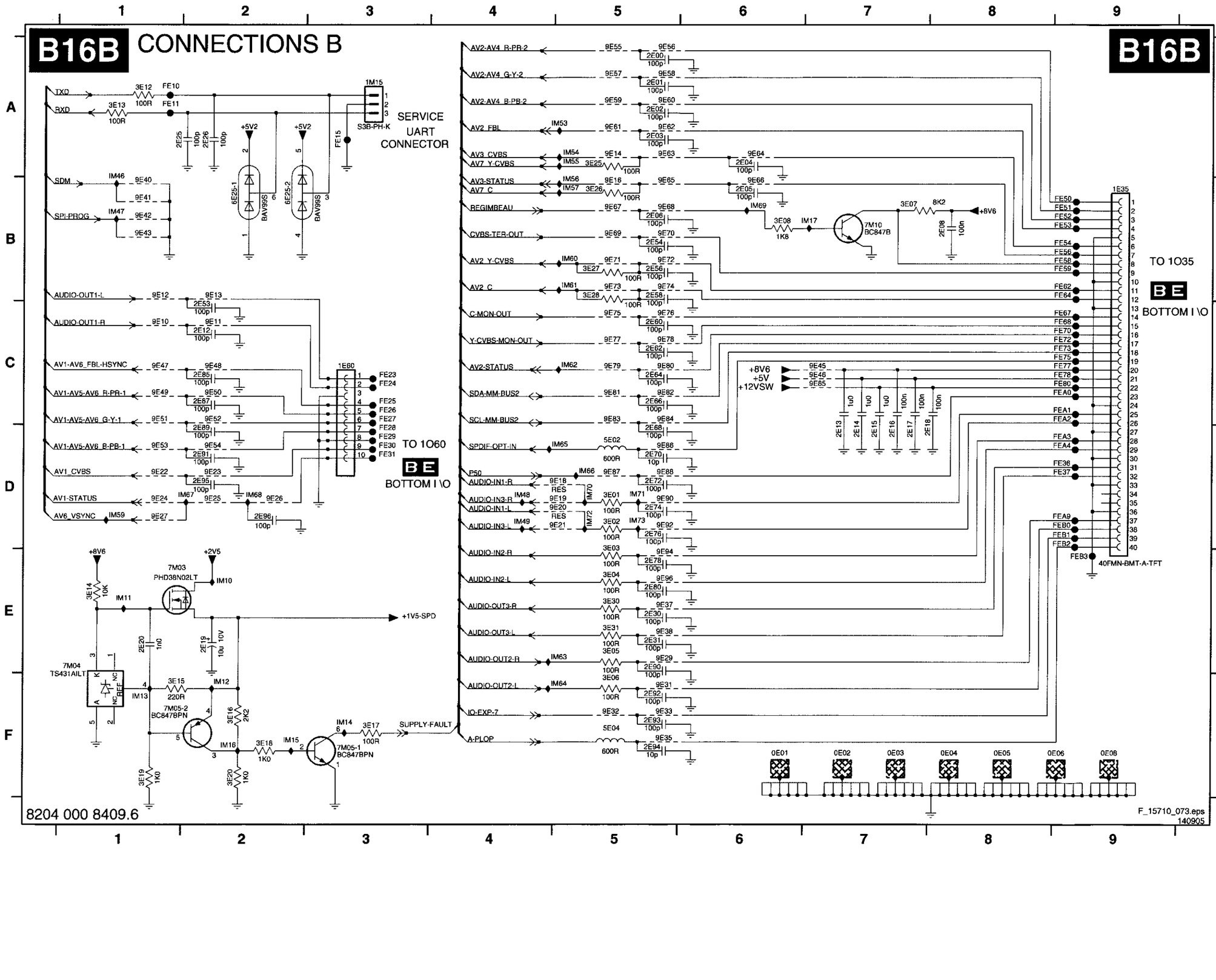

0E01 F6	7M05-1 F3	FE27 C3	
0E02 F7	7M05-2 F1	FE28 D3	
0E03 F7	7M10 B7	FE29 D3	
0E04 F8	9E10 C1	FE30 D3	
0E05 F8	9E11 C2	FE31 D3	
0E06 F9	9E12 B1	FE36 D9	
0E08 F9	9E13 B2	FE37 D9	
1E35 B9	9E14 A5	FE50 B9	
1E60 C3	9E16 B5	FE51 B9	
1M15 A3	9E18 D5	FE52 B9	
2E00 A5	9E19 D5	FE53 B9	
2E01 A5	9E20 D5	FE54 B9	
2E02 A5	9E21 D5	FE56 B9	
2E03 A5	9E22 D1	FE58 B9	
2E04 A6	9E23 D2	FE59 B9	
2E05 B6	9E24 D1	FE62 B9	
2E06 B5	9E25 D2	FE64 B9	
2E08 B8	9E26 D2	FE67 C9	
2E12 C2	9E27 D1	FE68 C9	
2E13 D7	9E29 E5	FE70 C9	
2E14 D7	9E31 F5	FE72 C9	
2E15 D7	9E32 F5	FE73 C9	
2E16 D7	9E33 F5	FE75 C9	
2E17 D7	9E35 F5	FE77 C9	
2E18 D8	9E37 E5	FE78 C9	
2E19 E2	9E38 E5	FE80 C9	
2E20 E1	9E40 B1	FEA0 C9	
2E25 A1	9E41 B1	FEA1 C9	
2E26 A2	9E42 B1	FEA2 C9	
2E30 E5	9E43 B1	FEA3 D9	
2E31 E5	9E45 C7	FEA4 D9	
2E53 C2	9E46 C7	FEA9 D9	
2E54 B5	9E47 C1	FEB0 D9	
2E56 B5	9E48 C2	FEB1 D9	
2E58 B5	9E49 C1	FEB2 D9	
2E60 C5	9E50 C2	FEB3 E9	
2E62 C5	9E51 C1	IM10 E2	
2E64 C5	9E52 C2	IM11 E1	
2E66 C5	9E53 D1	IM12 F2	
2E68 D5	9E54 D2	IM13 F1	
2E70 D5	9E55 A5	IM14 F3	
2E72 D5	9E56 A5	IM15 F2	
2E74 D5	9E57 A5	IM16 F2	
2E76 D5	9E58 A5	IM17 B7	
2E78 E5	9E59 A5	IM46 A1	
2E80 E5	9E60 A5	IM47 B1	
2E85 C2	9E61 A5	IM48 D4	
2E87 C2	9E62 A5	IM49 D4	
2E89 D2	9E63 A5	IM53 A5	
2E90 E5	9E64 A6	IM54 A5	
2E91 D2	9E65 B5	IM55 A5	
2E92 F5	9E66 B6	IM56 B5	
2E93 F5	9E67 B5	IM57 B5	
2E94 F5	9E68 B5	IM59 D1	
2E95 D2	9E69 B5	IM60 B5	
2E96 D2	9E70 B5	IM61 B5	
3E01 D5	9E71 B5	IM62 C5	
3E02 D5	9E72 B5	IM63 E5	
3E03 E5	9E73 B5	IM64 F5	
3E04 E5	9E74 B5	IM65 D5	
3E05 E5	9E75 C5	IM66 D5	
3E06 F5	9E76 C5	IM67 D2	
3E07 B7	9E77 C5	IM68 D2	
3E08 B6	9E78 C5	IM69 B6	
3E12 A1	9E79 C5	IM70 D5	
3E13 A1	9E80 C5	IM71 D5	
3E14 E1	9E81 C5	IM72 D5	
3E15 F1	9E82 C5	IM73 D5	
3E16 F2	9E83 C5		
3E17 F3	9E84 C5		
3E18 F2	9E85 C7		
3E19 F1	9E86 D5		
3E20 F2	9E87 D5		
3E25 A5	9E88 D5		
3E26 B5	9E90 D5		
3E27 B5	9E92 D5		
3E28 B5	9E94 E5		
3E30 E5	9E96 E5		
3E31 E5	FE10 A1		
5E02 D5	FE11 A1		
5E04 F5	FE15 A3		
6E25-1 B2	FE23 C3		
6E25-2 B2	FE24 C3		
7M03 E1	FE25 C3		
7M04 E1	FE26 C3		

SSB: Signal Lines Overview (v2) Part 1

Netname	Page
+12V-DC	B01
+12VS	B01
+12VS	B08a
+12VS	B08c
+12VS	B16a
+12VSW	B01
+12VSW	B04b
+12VSW	B04i
+12VSW	B09b
+12VSW	B09c
+12VSW	B14b
+12VSW	B16b
+12VSW-AIO	B14b
+1V2	B01
+1V2	B05e
+1V2	B07d
+1V2	B08a
+1V2-STANDBY	B05e
+1V2-STANDBY	B08a
+1V5	B09a
+1V5M	B09a
+1V5PLL	B09a
+1V5-SPD	B06c
+1V5-SPD	B16b
+2V5	B01
+2V5	B06b
+2V5	B06c
+2V5	B07d
+2V5	B08a
+2V5	B16b
+2V5D	B01
+2V5D	B07b
+2V5D-DDR	B07b
+2V5-DDR	B06b
+2V5-DDR	B06c
+2V5-DDRPNX	B05d
+2V5-DDRPNX	B05f
+2V5M	B09a
+2V5-N	B05c
+2V5-N	B06a
+2V5-S	B05c
+2V5-S	B05f
+2V5-SPDDR	B06b
+2V5-TUN	B05c
+2V5-TUN	B06a
+2V5-TUN	B06c
+2V5-VIPER	B07b
+2V5-VIPER	B07c
+2V5-VIPER	B07d
+2V8	B01
+3V3	B01
+3V3	B05a
+3V3	B05e
+3V3	B06c
+3V3	B07a
+3V3	B07c
+3V3	B07d
+3V3	B07e
+3V3	B08a
+3V3	B08b
+3V3	B09a
+3V3	B09b
+3V3	B09c
+3V3	B11c
+3V3	B13a
+3V3	B14b
+3V3	B15
+3V3	B16a
+3V3-AIO	B14b
+3V3-AIO	B14c
+3V3-AV	B11c
+3V3-ET-ANA	B15
+3V3-ET-DIG	B15
+3V3-HD	B11c
+3V3M	B09a
+3V3M	B09d
+3V3-SD	B09a
+3V3-SD	B09d
+3V3-SPIDER	B06a
+3V3-SPIDER	B06c
+3V3-SPIDER	B06d
+3V3-STANDBY	B05e
+3V3-STANDBY	B08a
+3V3-STANDBY	B14b
+5V	B01
+5V	B07a
+5V	B08a
+5V	B11c
+5V	B14b
+5V	B16a
+5V	B16b
+5V2	B01
+5V2	B05e
+5V2	B08a
+5V2	B08c
+5V2	B14a
+5V2	B16a
+5V2	B16b
+5V2S	B04b
+5V2S	B04f
+5V2S	B04i

+5V2S	B09b
+5V2-STANDBY	B05e
+5V2-STANDBY	B16a
+5V2-STBY_9VSTBY	B16a
+5V-AIO	B14b
+5V-AIO	B14c
+5VaM	B04c
+5VaS	B04g
+5V-AUD	B04b
+5V-AUD	B04i
+5VbM	B04a
+5VbM	B04c
+5VbMAIN	B04a
+5VbS	B04g
+5VDISP	B09b
+5VDISP	B09c
+5VMPIF-MAIN	B04a
+5VMPIF-MAIN	B04b
+5VMPIF-MAIN	B04c
+5VMPIF-SUB	B04e
+5VMPIF-SUB	B04f
+5VMPIF-SUB	B04g
+5VTUN	B02
+5VTUN	B03
+5VTUNMAIN	B02
+5VTUNSUB	B03
+5V-USB	B07e
+5V-USB	B16a
+8V6	B02
+8V6	B04b
+8V6	B04f
+8V6	B08a
+8V6	B08b
+8V6	B11a
+8V6	B12a
+8V6	B14b
+8V6	B16a
+8V6	B16b
+8VaM	B04c
+8VaS	B04g
+8V-AUD	B04b
+8VMPIF-MAIN	B04b
+8VMPIF-MAIN	B04c
+8VMPIF-SUB	B04f
+8VMPIF-SUB	B04g
+9V-STBY	B16a
+VTUN	B01
+VTUN	B02
+VTUN	B16a
+VTUN1	B02
+VTUN2	B02
+VTUN2	B03
1V8-APLL	B11c
1V8-DIG	B11c
1V8-HDMI	B11c
1V8-PLL	B11c
2NDSIFEXTM	B04c
2NDSIFEXTS	B04g
3V3-APLL	B11c
3V3-AVI	B11c
3V3-DIG	B11a
3V3-DIG	B11b
3V3-DIG	B11c
3V3-HDMI	B11b
3V3-HDMI	B11c
3V3-PLL	B11c
A(0)	B06b
A(1)	B06b
A(10)	B06b
A(11)	B06b
A(2)	B06b
A(3)	B06b
A(4)	B06b
A(5)	B06b
A(6)	B06b
A(7)	B06b
A(8)	B06b
A(9)	B06b
A0	B09d
A1	B09d
A10	B09d
A11	B09d
A2	B09d
A3	B09d
A4	B09d
A5	B09d
A6	B09d
A7	B09d
A8	B09d
A9	B09d
ADAC1	B04i
ADAC1	B05a
ADAC2	B04i
ADAC2	B05a
ADAC4	B04i
ADAC4	B05a
ADAC7	B04i
ADAC7	B05a
ADAC8	B04i
ADAC8	B05a
AGC1	B03
AGC1	B04g

AGC2	B02
AGC2	B04c
AIN-5V	B11a
ALE	B05e
ALE	B05g
A-PLOP	B07a
A-PLOP	B08c
A-PLOP	B12a
A-PLOP	B14a
A-PLOP	B16a
A-PLOP	B16b
AP-SCART1-OUT-L	B12a
AP-SCART1-OUT-R	B12a
ARX0-	B11a
ARX0+	B11a
ARX1-	B11a
ARX1+	B11a
ARX2-	B11a
ARX2+	B11a
ARXC-	B11a
ARXC+	B11a
ARX-DDC-SCL	B11a
ARX-DDC-SDA	B11a
ARX-HOTPLUG	B11a
AUDIO-CENTER-IN	B04d
AUDIO-CENTER-IN	B04h
AUDIO-HDPH-L	B04i
AUDIO-HDPH-L	B14a
AUDIO-HDPH-L-AP	B14a
AUDIO-HDPH-L-AP	B16a
AUDIO-HDPH-R	B04i
AUDIO-HDPH-R	B14a
AUDIO-HDPH-R-AP	B14a
AUDIO-HDPH-R-AP	B16a
AUDIO-IN1-L	B04d
AUDIO-IN1-L	B04h
AUDIO-IN1-L	B12a
AUDIO-IN1-L	B16b
AUDIO-IN1-R	B04d
AUDIO-IN1-R	B04h
AUDIO-IN1-R	B12a
AUDIO-IN1-R	B16b
AUDIO-IN2-L	B04d
AUDIO-IN2-L	B04h
AUDIO-IN2-L	B16b
AUDIO-IN2-R	B04d
AUDIO-IN2-R	B04h
AUDIO-IN2-R	B16b
AUDIO-IN3-L	B04d
AUDIO-IN3-L	B04h
AUDIO-IN3-L	B16b
AUDIO-IN3-R	B04d
AUDIO-IN3-R	B04h
AUDIO-IN3-R	B16b
AUDIO-IN4-L	B04d
AUDIO-IN4-L	B04h
AUDIO-IN4-L	B14b
AUDIO-IN4-R	B04d
AUDIO-IN4-R	B04h
AUDIO-IN4-R	B14b
AUDIO-IN5-L	B04d
AUDIO-IN5-L	B04h
AUDIO-IN5-L	B16a
AUDIO-IN5-R	B04d
AUDIO-IN5-R	B04h
AUDIO-IN5-R	B16a
AUDIO-L	B04i
AUDIO-L	B16a
AUDIO-OUT1-L	B04d
AUDIO-OUT1-L	B12a
AUDIO-OUT1-L	B16b
AUDIO-OUT1-R	B04d
AUDIO-OUT1-R	B12a
AUDIO-OUT1-R	B16b
AUDIO-OUT2-L	B04h
AUDIO-OUT2-L	B16b
AUDIO-OUT2-M-L	B04d
AUDIO-OUT2-M-L	B04h
AUDIO-OUT2-M-R	B04d
AUDIO-OUT2-M-R	B04h
AUDIO-OUT2-R	B04h
AUDIO-OUT2-R	B16b
AUDIO-OUT3-L	B04d
AUDIO-OUT3-L	B16b
AUDIO-OUT3-R	B04d
AUDIO-OUT3-R	B16b
AUDIO-R	B04i
AUDIO-R	B16a
AUDIO-SW	B04i
AUDIO-SW	B16a
AV1_CVBS	B04a
AV1_CVBS	B04e
AV1_CVBS	B12a
AV1_CVBS	B16b
AV1-AV5-AV6_B-PB	B04a
AV1-AV5-AV6_B-PB	B04e
AV1-AV5-AV6_B-PB	B11b
AV1-AV5-AV6_B-PB	B12a
AV1-AV5-AV6_B-PB-1	B12a
AV1-AV5-AV6_B-PB-1	B16b
AV1-AV5-AV6_G-Y	B04a
AV1-AV5-AV6_G-Y	B04e

AV1-AV5-AV6_G-Y	B11b
AV1-AV5-AV6_G-Y	B12a
AV1-AV5-AV6_G-Y-1	B12a
AV1-AV5-AV6_G-Y-1	B16b
AV1-AV5-AV6_R-PR	B04a
AV1-AV5-AV6_R-PR	B04e
AV1-AV5-AV6_R-PR	B11b
AV1-AV5-AV6_R-PR	B12a
AV1-AV5-AV6_R-PR-1	B12a
AV1-AV5-AV6_R-PR-1	B16b
AV1-AV6_FBL-HSYNC	B05a
AV1-AV6_FBL-HSYNC	B11b
AV1-AV6_FBL-HSYNC	B12a
AV1-AV6_FBL-HSYNC	B16b
AV1-STATUS	B05e
AV1-STATUS	B12a
AV1-STATUS	B16b
AV2_C	B04a
AV2_C	B04e
AV2_C	B16b
AV2_FBL	B05a
AV2_FBL	B16b
AV2_Y-CVBS	B04a
AV2_Y-CVBS	B04e
AV2_Y-CVBS	B16b
AV2-AV4_B-PB	B04a
AV2-AV4_B-PB	B04e
AV2-AV4_B-PB	B11b
AV2-AV4_B-PB	B12a
AV2-AV4_B-PB-2	B12a
AV2-AV4_B-PB-2	B16b
AV2-AV4_G-Y	B04a
AV2-AV4_G-Y	B04e
AV2-AV4_G-Y	B11b
AV2-AV4_G-Y	B12a
AV2-AV4_G-Y-2	B12a
AV2-AV4_G-Y-2	B16b
AV2-AV4_R-PR	B04a
AV2-AV4_R-PR	B04e
AV2-AV4_R-PR	B11b
AV2-AV4_R-PR	B12a
AV2-AV4_R-PR-2	B12a
AV2-AV4_R-PR-2	B16b
AV2-STATUS	B05e
AV2-STATUS	B16b
AV3_CVBS	B04a
AV3_CVBS	B04e
AV3_CVBS	B16b
AV3-STATUS	B05e
AV3-STATUS	B16b
AV6_VSYNC	B05a
AV6_VSYNC	B11b
AV6_VSYNC	B16b
AV7_C	B04a
AV7_C	B04e
AV7_C	B16b
AV7_Y-CVBS	B04a
AV7_Y-CVBS	B04e
AV7_Y-CVBS	B16b
B0e	B09d
B0o	B09d
B1e	B09d
B1o	B09d
B2e	B09d
B2o	B09d
B3e	B09d
B3o	B09d
B4e	B09d
B4o	B09d
B5e	B09d
B5o	B09d
B6e	B09d
B6o	B09d
B7e	B09d
B7o	B09d
BA0	B06b
BA1	B06b
BACKLIGHT-CONTROL	B05e
BACKLIGHT-CONTROL	B07c
BACKLIGHT-CONTROL	B16a
BIN-5V	B11a
BRX0-	B11a
BRX0+	B11a
BRX1-	B11a
BRX1+	B11a
BRX2-	B11a
BRX2+	B11a
BRXC-	B11a
BRXC+	B11a
BRX-DDC-SCL	B11a
BRX-DDC-SDA	B11a
BRX-HOTPLUG	B11a
CAS	B06b
CAS	B09d
CK	B06b
CKE	B06b
CKN	B06b
Clk	B09d
CLK-MPIF	B04b
CLK-MPIF	B04f
CLK-MPIF	B05a
CLK-OUT	B09d

C-MON-OUT	B07c
C-MON-OUT	B16b
COM-SND	B05g
COM-SND	B16a
CS	B06b
CTRL1-MOP	B09c
CTRL1-MOP	B09d
CTRL1-STBY	B05e
CTRL1-STBY	B09c
CTRL1-VIPER	B07c
CTRL1-VIPER	B09b
CTRL1-VIPER	B09c
CTRL2-MOP	B09c
CTRL2-MOP	B09d
CTRL2-VIPER	B07c
CTRL2-VIPER	B09c
CTRL3-STBY	B05e
CTRL4-MOP	B09c
CTRL4-MOP	B09d
CTRL4-STBY	B05e
CTRL4-VIPER	B07a
CTRL4-VIPER	B09c
CTRL4-VIPER	B09d
CTRL-DISP1	B09c
CTRL-DISP2	B09c
CVBSOUTIF-MAIN	B04a
CVBSOUTIF-MAIN	B04c
CVBSOUTIF-MAIN	B04e
CVBSOUTIF-SUB	B04a
CVBSOUTIF-SUB	B04e
CVBSOUTIF-SUB	B04g
CVBS-OUT-TER-MAIN	B04a
CVBS-OUT-TER-MAIN	B04c
CVBS-TER-OUT	B04a
CVBS-TER-OUT	B12a
CVBS-TER-OUT	B16b
D1	B09d
D10	B09d
D11	B09d
D12	B09d
D13	B09d
D14	B09d
D15	B09d
D16	B09d
D2	B09d
D3	B09d
D4	B09d
D5	B09d
D6	B09d
D7	B09d
D8	B09d
D9	B09d
DAC-CVBS	B07c
DAC-CVBS	B08b
DATA1N-MAIN	B04a
DATA1N-MAIN	B05a
DATA1N-SUB	B04e
DATA1N-SUB	B05a
DATA1P-MAIN	B04a
DATA1P-MAIN	B05a
DATA1P-SUB	B04e
DATA1P-SUB	B05a
DATA2N-MAIN	B04a
DATA2N-MAIN	B05a
DATA2N-SUB	B04e
DATA2N-SUB	B05a
DATA2P-MAIN	B04a
DATA2P-MAIN	B05a
DATA2P-SUB	B04e
DATA2P-SUB	B05a
DATA3N-MAIN	B04a
DATA3N-MAIN	B05a
DATA3N-SUB	B04e
DATA3N-SUB	B05a
DATA3P-MAIN	B04a
DATA3P-MAIN	B05a
DATA3P-SUB	B04e
DATA3P-SUB	B05a
DE	B09d
DEBUG-BREAK	B05e
DEBUG-BREAK	B07a
DETECT-12VSW	B05g
DETECT-12VSW	B08a
DETECT-1V2	B05g
DETECT-1V2	B08a
DETECT-2V5	B05g
DETECT-2V5	B08a
DETECT-3V3	B05g
DETECT-3V3	B08a
DETECT-5V	B05g
DETECT-5V	B08a
DETECT-8V6	B05g
DETECT-8V6	B08a
DQ(0)	B06b
DQ(1)	B06b
DQ(10)	B06b
DQ(11)	B06b
DQ(12)	B06b
DQ(13)	B06b
DQ(14)	B06b
DQ(15)	B06b
DQ(2)	B06b

DQ(3)	B06b
DQ(4)	B06b
DQ(5)	B06b
DQ(6)	B06b
DQ(7)	B06b
DQ(8)	B06b
DQ(9)	B06b
DQM	B09d
DSNDL1	B04d
DSNDL1	B05a
DSNDL2	B04d
DSNDL2	B05a
DSNDR1	B04d
DSNDR1	B05a
DSNDR2	B04d
DSNDR2	B05a
DV1F-CLK	B05b
DV1F-CLK	B07c
DV1F-DATA0_SOP	B05b
DV1F-DATA0_SOP	B07c
DV1F-DATA1_ERR	B05b
DV1F-DATA1_ERR	B07c
DV1F-DATA2_0	B05b
DV1F-DATA2_0	B07c
DV1F-DATA3_1	B05b
DV1F-DATA3_1	B07c
DV1F-DATA4_2	B05b
DV1F-DATA4_2	B07c
DV1F-DATA5_3	B05b
DV1F-DATA5_3	B07c
DV1F-DATA6_4	B05b
DV1F-DATA6_4	B07c
DV1F-DATA7_5	B05b
DV1F-DATA7_5	B07c
DV1F-DATA8_6	B05b
DV1F-DATA8_6	B07c
DV1F-DATA9_7	B05b
DV1F-DATA9_7	B07c
DV1F-VALID	B05b
DV1F-VALID	B07c
DV2A-CLK	B05b
DV2A-CLK	B07c
DV2A-DATA0_SOP	B05b
DV2A-DATA0_SOP	B07c
DV2A-DATA1_ERR	B05b
DV2A-DATA1_ERR	B07c
DV2A-DATA2_0	B05b
DV2A-DATA2_0	B07c
DV2A-DATA3_1	B05b
DV2A-DATA3_1	B07c
DV2A-DATA4_2	B05b
DV2A-DATA4_2	B07c
DV2A-DATA5_3	B05b
DV2A-DATA5_3	B07c
DV2A-DATA6_4	B05b
DV2A-DATA6_4	B07c
DV2A-DATA7_5	B05b
DV2A-DATA7_5	B07c
DV2A-DATA8_6	B05b
DV2A-DATA8_6	B07c
DV2A-DATA9_7	B05b
DV2A-DATA9_7	B07c
DV2A-VALID	B05b
DV2A-VALID	B07c
DV3F-CLK	B05b
DV3F-CLK	B07c
DV3F-DATA0_SOP	B05b
DV3F-DATA0_SOP	B07c
DV3F-DATA1_ERR	B05b
DV3F-DATA1_ERR	B07c
DV3F-DATA2_0	B05b
DV3F-DATA2_0	B07c
DV3F-DATA3_1	B05b
DV3F-DATA3_1	B07c
DV3F-DATA4_2	B05b
DV3F-DATA4_2	B07c
DV3F-DATA5_3	B05b
DV3F-DATA5_3	B07c
DV3F-DATA6_4	B05b
DV3F-DATA6_4	B07c
DV3F-DATA7_5	B05b
DV3F-DATA7_5	B07c
DV3F-DATA8_6	B05b
DV3F-DATA8_6	B07c
DV3F-DATA9_7	B05b
DV3F-DATA9_7	B07c
DV3F-VALID	B05b
DV3F-VALID	B07c
DV4-CLK	B05b
DV4-CLK	B11b
DV4-DATA0_SOP	B05b
DV4-DATA0_SOP	B11b
DV4-DATA1_ERR	B05b
DV4-DATA1_ERR	B11b
DV4-DATA2_0	B05b
DV4-DATA2_0	B11b
DV4-DATA3_1	B05b
DV4-DATA3_1	B11b
DV4-DATA4_2	B05b
DV4-DATA4_2	B11b
DV4-DATA5_3	B05b
DV4-DATA5_3	B11b

DV4-DATA6_4	B05b
DV4-DATA6_4	B11b
DV4-DATA7_5	B05b
DV4-DATA7_5	B11b
DV4-DATA8_6	B05b
DV4-DATA8_6	B11b
DV4-DATA9_7	B05b
DV4-DATA9_7	B11b
DV4-VALID	B05b
DV4-VALID	B11b
DV5-DATA0_SOP	B05b
DV5-DATA0_SOP	B11b
DV5-DATA1_ERR	B05b
DV5-DATA1_ERR	B11b
DV5-DATA2_0	B05b
DV5-DATA2_0	B11b
DV5-DATA3_1	B05b
DV5-DATA3_1	B11b
DV5-DATA4_2	B05b
DV5-DATA4_2	B11b
DV5-DATA5_3	B05b
DV5-DATA5_3	B11b
DV5-DATA6_4	B05b
DV5-DATA6_4	B11b
DV5-DATA7_5	B05b
DV5-DATA7_5	B11b
DV5-DATA8_6	B05b
DV5-DATA8_6	B11b
DV5-DATA9_7	B05b
DV5-DATA9_7	B11b
DV-BOUT-0	B07c
DV-BOUT-0	B09d
DV-BOUT-1	B07c
DV-BOUT-1	B09d
DV-BOUT-2	B07c
DV-BOUT-2	B09d
DV-BOUT-3	B07c
DV-BOUT-3	B09d
DV-BOUT-4	B07c
DV-BOUT-4	B09d
DV-BOUT-5	B07c
DV-BOUT-5	B09d
DV-BOUT-6	B07c
DV-BOUT-6	B09d
DV-BOUT-7	B07c
DV-BOUT-7	B09d
DV-BOUT-8	B07c
DV-BOUT-8	B09d
DV-BOUT-9	B07c
DV-BOUT-9	B09d
DV-CLKIN	B07c
DV-CLKIN	B09a
DV-FREF	B05b
DV-FREF	B11b
DV-GOUT-0	B07c
DV-GOUT-0	B09d
DV-GOUT-1	B07c
DV-GOUT-1	B09d
DV-GOUT-2	B07c
DV-GOUT-2	B09d
DV-GOUT-3	B07c
DV-GOUT-3	B09d
DV-GOUT-4	B07c
DV-GOUT-4	B09d
DV-GOUT-5	B07c
DV-GOUT-5	B09d
DV-GOUT-6	B07c
DV-GOUT-6	B09d
DV-GOUT-7	B07c
DV-GOUT-7	B09d
DV-GOUT-8	B07c
DV-GOUT-8	B09d
DV-GOUT-9	B07c
DV-GOUT-9	B09d
DV-HREF	B05b
DV-HREF	B11b
DVI-B-Pb	B11a
DVI-B-Pb	B11b
DVI-B-Pb3	B11a
DVI-G-Y	B11a
DVI-G-Y	B11b
DVI-G-Y3	B11a
DVI-HSYNC	B11a
DVI-HSYNC	B11b
DVI-HSYNC3	B11a
DVI-R-Pr	B11a
DVI-R-Pr	B11b
DVI-R-Pr3	B11a
DVI-VSYNC	B11a
DVI-VSYNC	B11b
DVI-VSYNC3	B11a
DV-OUT-DE	B07c
DV-OUT-DE	B09d
DV-OUT-FFIELD	B07c
DV-OUT-FFIELD	B09d
DV-OUT-HS	B07c
DV-OUT-HS	B09d
DV-OUT-VS	B07c
DV-OUT-VS	B09b
DV-OUT-VS	B09d
DV-ROUT-0	B07c
DV-ROUT-0	B09d

DV-ROUT-1	B07c
DV-ROUT-1	B09d
DV-ROUT-2	B07c
DV-ROUT-2	B09d
DV-ROUT-3	B07c
DV-ROUT-3	B09d
DV-ROUT-4	B07c
DV-ROUT-4	B09d
DV-ROUT-5	B07c
DV-ROUT-5	B09d
DV-ROUT-6	B07c
DV-ROUT-6	B09d
DV-ROUT-7	B07c
DV-ROUT-7	B09d
DV-ROUT-8	B07c
DV-ROUT-8	B09d
DV-ROUT-9	B07c
DV-ROUT-9	B09d
DV-VREF	B05b
DV-VREF	B11b
EA	B05e
EA	B05g
EJTAG-DETECT	B05e
EJTAG-DETECT	B07e
EJTAG-TCK	B07a
EJTAG-TCK	B07e
EJTAG-TDI	B07a
EJTAG-TDI	B07e
EJTAG-TDO	B07a
EJTAG-TDO	B07e
EJTAG-TMS	B07a
EJTAG-TMS	B07e
ENABLE-1V2	B01
ENABLE-1V2	B05g
ENABLE-2V5	B01
ENABLE-2V5	B05g
ENABLE-3V3	B01
ENABLE-3V3	B05g
ENABLE5V	B09b
ENABLE5V	B09c
FFe	B09d
FFo	B09d
FRONT_C	B04a
FRONT_C	B04e
FRONT_C	B16a
FRONT_Y-CVBS	B04a
FRONT_Y-CVBS	B04e
FRONT_Y-CVBS	B16a
FRONT-DETECT	B05e
FRONT-DETECT	B16a
G0e	B09d
G0o	B09d
G1e	B09d
G1o	B09d
G2e	B09d
G2o	B09d
G3e	B09d
G3o	B09d
G4e	B09d
G4o	B09d
G5e	B09d
G5o	B09d
G6e	B09d
G6o	B09d
G7e	B09d
G7o	B09d
GLINK-IR-OUT	B07a
GLINK-RXD	B07a
GLINK-RXD	B14b
GLINK-TXD	B07a
GLINK-TXD	B14b
HDMI-COAST	B07a
HDMI-COAST	B11b
HPD-HIRATE	B07a
HPD-HIRATE	B11a
HPD-HIRATE	B11b
HSe	B09d
HSo	B09d
HV-PRM-MAIN	B04a
HV-PRM-MAIN	B05a
HV-PRM-SUB	B04e
HV-PRM-SUB	B05a
I2S-BCLK-AVIP	B05a
I2S-BCLK-AVIP	B07c
I2S-BCLK-MAIN	B05a
I2S-BCLK-MAIN	B07c
I2S-BCLK-SUB	B05a
I2S-BCLK-SUB	B07c
I2S-MAIN-D	B05a
I2S-MAIN-D	B07c
I2S-MAIN-ND	B05a
I2S-MAIN-ND	B07c
I2S-MCH-CSW	B05a
I2S-MCH-CSW	B07c
I2S-MCH-LR	B05a
I2S-MCH-LR	B07c
I2S-MCH-SLR	B05a
I2S-MCH-SLR	B07c
I2S-SUB-D	B05a
I2S-SUB-D	B07c
I2S-SUB-ND	B05a
I2S-SUB-ND	B07c

I2S-WS-AVIP	B05a
I2S-WS-AVIP	B07c
I2S-WS-MAIN	B05a
I2S-WS-MAIN	B07c
I2S-WS-SUB	B05a
I2S-WS-SUB	B07c
IF-TER1	B03
IF-TER1	B04g
IF-TER2	B02
IF-TER2	B04c
IO-EXP-1	B05e
IO-EXP-1	B14b
IO-EXP-1	B14c
IO-EXP-2	B05e
IO-EXP-2	B14b
IO-EXP-2	B14c
IO-EXP-7	B16b
IRQ-AVIP	B05e
IRQ-AVIP	B07a
IRQ-AVIP-SUB	B05e
IRQ-AVIP-SUB	B07a
IRQ-ETHERNET	B07a
IRQ-ETHERNET	B15
IRQ-FE-MAIN	B07a
IRQ-FE-SUB	B07a
IRQ-HD1	B05e
IRQ-HD1	B07a
IRQ-HD2	B05e
IRQ-HD2	B07a
IRQ-HIRATE	B05e
IRQ-HIRATE	B07a
IRQ-HIRATE	B11b
IRQ-IEEE1394	B07a
IRQ-MAIN	B07a
IRQ-MPIF	B04b
IRQ-MPIF	B07a
IRQ-MPIF-SUB	B04f
IRQ-MPIF-SUB	B07a
IRQ-POD	B05e
IRQ-POD	B07a
IRQ-SPIDER	B06a
IRQ-SPIDER	B07a
IRQ-SUB	B07a
IRQ-USB20	B07a
IRQ-USB20	B13a
JTAG-TCK	B05e
JTAG-TCK	B06a
JTAG-TCK	B07a
JTAG-TCK	B07e
JTAG-TCK	B11b
JTAG-TD-CON-VIPER	B07a
JTAG-TD-CON-VIPER	B07e
JTAG-TD-HDMI-PNX2015	B05e
JTAG-TD-HDMI-PNX2015	B11b
JTAG-TD-MOP-SPIDER	B06a
JTAG-TD-MOP-SPIDER	B09c
JTAG-TD-PNX2015-POD	B05e
JTAG-TD-PNX2015-POD	B12a
JTAG-TD-POD-CON	B07e
JTAG-TD-POD-CON	B12a
JTAG-TD-SPIDER-HDMI	B06a
JTAG-TD-SPIDER-HDMI	B11b
JTAG-TD-VIPER-MOP	B07a
JTAG-TD-VIPER-MOP	B09c
JTAG-TMS	B05e
JTAG-TMS	B06a
JTAG-TMS	B07a
JTAG-TMS	B07e
JTAG-TMS	B11b
JTAG-TRST	B05e
JTAG-TRST	B06a
JTAG-TRST	B07a
JTAG-TRST	B07e
JTAG-TRST	B11b
KEYBOARD	B05e
KEYBOARD	B16a
LAMP-ON	B05g
LAMP-ON	B16a
LDQS	B06b
LED1	B05e
LED1	B16a
LED1-3V3	B05e
LED2	B05e
LED2	B16a
LED2-3V3	B05e
LIGHT-SENSOR	B05e
LIGHT-SENSOR	B16a
LVDS-3V3	B05f
LVDS-PLL-3V3	B05f
M135-CLK	B07a
M135-CLK	B11b
M27-CLK	B05a
M27-CLK	B07a
M27-HDMI	B05a
M27-HDMI	B11b
M27-MOP	B05a
M27-MOP	B09d
M27-PNX	B05a
M27-PNX	B05e
MM_A0	B07b
MM_A1	B07b
MM_A10	B07b

MM_A11	B07b
MM_A12	B07b
MM_A2	B07b
MM_A3	B07b
MM_A4	B07b
MM_A5	B07b
MM_A6	B07b
MM_A7	B07b
MM_A8	B07b
MM_A9	B07b
MM_BA0	B07b
MM_BA1	B07b
MM_CAS	B07b
MM_CKE	B07b
MM_CLK_N	B07b
MM_CLK_P	B07b
MM_CS0	B07b
MM_DATA_0	B07b
MM_DATA_1	B07b
MM_DATA_10	B07b
MM_DATA_11	B07b
MM_DATA_12	B07b
MM_DATA_13	B07b
MM_DATA_14	B07b
MM_DATA_15	B07b
MM_DATA_16	B07b
MM_DATA_17	B07b
MM_DATA_18	B07b
MM_DATA_19	B07b
MM_DATA_2	B07b
MM_DATA_20	B07b
MM_DATA_21	B07b
MM_DATA_22	B07b
MM_DATA_23	B07b
MM_DATA_24	B07b
MM_DATA_25	B07b
MM_DATA_26	B07b
MM_DATA_27	B07b
MM_DATA_28	B07b
MM_DATA_29	B07b
MM_DATA_3	B07b
MM_DATA_30	B07b
MM_DATA_31	B07b
MM_DATA_4	B07b
MM_DATA_5	B07b
MM_DATA_6	B07b
MM_DATA_7	B07b
MM_DATA_8	B07b
MM_DATA_9	B07b
MM_DQM_0	B07b
MM_DQM_1	B07b
MM_DQM_2	B07b
MM_DQM_3	B07b
MM_DQS0	B07b
MM_DQS1	B07b
MM_DQS2	B07b
MM_DQS3	B07b
MM_RAS	B07b
MM_WE	B07b
MP-BOUT-0	B05b
MP-BOUT-1	B05b
MP-BOUT-2	B05b
MP-BOUT-3	B05b
MP-BOUT-4	B05b
MP-BOUT-5	B05b
MP-BOUT-6	B05b
MP-BOUT-7	B05b
MP-BOUT-8	B05b
MP-BOUT-9	B05b
MP-CLKOUT	B05b
MP-GOUT-0	B05b
MP-GOUT-1	B05b
MP-GOUT-2	B05b
MP-GOUT-3	B05b
MP-GOUT-4	B05b
MP-GOUT-5	B05b
MP-GOUT-6	B05b
MP-GOUT-7	B05b
MP-GOUT-8	B05b
MP-GOUT-9	B05b
MP-OUT-DE	B05b
MP-OUT-FFIELD	B05b
MP-OUT-HS	B05b
MP-OUT-VS	B05b
MP-ROUT-0	B05b

F_15710_132.eps
190905

SSB: Signal Lines Overview (v2) Part 2

NAND-AD(0)	B08b	PCI-AD0	B13a	PCI-AD26	B07a	PCI-DEVSEL	B07a	PNX-MDATA-5	B05d	SCL-MM-BUS1	B09b	STROBE2N-MAIN	B04a	TUN-SPIDER-TX-DATA8	B05c	TXCLKo-	B09d
NAND-AD(1)	B08b	PCI-AD0	B13b	PCI-AD26	B08b	PCI-DEVSEL	B12b	PNX-MDATA-6	B05d	SCL-MM-BUS1	B09d	STROBE2N-MAIN	B05a	TUN-SPIDER-TX-DATA8	B06a	TXCLKo+	B09c
NAND-AD(10)	B08b	PCI-AD0	B15	PCI-AD26	B12b	PCI-DEVSEL	B13a	PNX-MDATA-7	B05d	SCL-MM-BUS1	B11b	STROBE2N-SUB	B04e	TUN-SPIDER-TX-DATA9	B05c	TXCLKo+	B09d
NAND-AD(11)	B08b	PCI-AD1	B07a	PCI-AD26	B13a	PCI-DEVSEL	B13b	PNX-MDATA-8	B05d	SCL-MM-BUS2	B08a	STROBE2N-SUB	B05a	TUN-SPIDER-TX-DATA9	B06a	TXCo-	B09c
NAND-AD(12)	B08b	PCI-AD1	B08b	PCI-AD26	B13b	PCI-DEVSEL	B15	PNX-MDATA-9	B05d	SCL-MM-BUS2	B14b	STROBE2P-MAIN	B04a	TUNS-REF	B05c	TXCo-	B09d
NAND-AD(13)	B08b	PCI-AD1	B12b	PCI-AD26	B15	PCI-FRAME	B07a	PNX-MDQM-0	B05d	SCL-MM-BUS2	B16a	STROBE2P-MAIN	B05a	TUN-VIPER-RX-BUSY	B05c	TXCo+	B09c
NAND-AD(14)	B08b	PCI-AD1	B13a	PCI-AD27	B07a	PCI-FRAME	B12b	PNX-MDQM-1	B05d	SCL-MM-BUS2	B16b	STROBE2P-SUB	B04e	TUN-VIPER-RX-BUSY	B07c	TXCo+	B09d
NAND-AD(15)	B08b	PCI-AD1	B13b	PCI-AD27	B08b	PCI-FRAME	B13a	PNX-MDQS-0	B05d	SCL-MOP	B09b	STROBE2P-SUB	B05a	TUN-VIPER-RX-CLKP	B05c	TXD	B08a
NAND-AD(2)	B08b	PCI-AD1	B15	PCI-AD27	B12b	PCI-FRAME	B13b	PNX-MDQS-1	B05d	SCL-MOP	B09d	STROBE3N-MAIN	B04a	TUN-VIPER-RX-CLKP	B07c	TXD	B14b
NAND-AD(3)	B08b	PCI-AD10	B07a	PCI-AD27	B13a	PCI-FRAME	B15	PNX-MRAS	B05d	SCL-TUN	B02	STROBE3N-MAIN	B05a	TUN-VIPER-RX-DATA0	B05c	TXD	B16b
NAND-AD(4)	B08b	PCI-AD10	B12b	PCI-AD27	B13b	PCI-GNT	B07a	PNX-MWE	B05d	SCL-TUN	B08a	STROBE3N-SUB	B04e	TUN-VIPER-RX-DATA0	B07c	TXDe-	B09c
NAND-AD(5)	B08b	PCI-AD10	B13a	PCI-AD27	B15	PCI-GNT	B12b	POD-MODE	B01	SCL-UP-SW	B05e	STROBE3N-SUB	B05a	TUN-VIPER-RX-DATA1	B05c	TXDe-	B09d
NAND-AD(6)	B08b	PCI-AD10	B13b	PCI-AD28	B07a	PCI-GNT	B13a	POD-MODE	B05e	SCL-UP-VIP	B05e	STROBE3P-MAIN	B04a	TUN-VIPER-RX-DATA1	B07c	TXDe+	B09c
NAND-AD(7)	B08b	PCI-AD10	B15	PCI-AD28	B08b	PCI-GNT	B13b	POD-MODE	B05g	SCL-UP-VIP	B07a	STROBE3P-MAIN	B05a	TUN-VIPER-RX-DATA10	B05c	TXDe+	B09d
NAND-AD(8)	B08b	PCI-AD11	B07a	PCI-AD28	B12b	PCI-GNT-A	B07a	POWERDOWN-1394	B07a	SCL-UP-VIP	B07e	STROBE3P-SUB	B04e	TUN-VIPER-RX-DATA10	B07c	TXDo-	B09c
NAND-AD(9)	B08b	PCI-AD11	B12b	PCI-AD28	B13a	PCI-GNT-A	B12b	POWERDOWN-1394	B11b	SCL-UP-VIP	B08a	STROBE3P-SUB	B05a	TUN-VIPER-RX-DATA11	B05c	TXDo-	B09d
NAND-ALE	B08b	PCI-AD11	B13a	PCI-AD28	B13b	PCI-GNT-A	B13b	POWER-OK-DISPLAY	B05e	SDA-AMBI	B09b	SUPPLY-FAULT	B05e	TUN-VIPER-RX-DATA11	B07c	TXDo+	B09c
NAND-CLE	B08b	PCI-AD11	B13b	PCI-AD28	B15	PCI-GNT-A	B15	POWER-OK-DISPLAY	B16a	SDA-AMBI	B16a	SUPPLY-FAULT	B09b	TUN-VIPER-RX-DATA12	B05c	TXDo+	B09d
NAND-REN	B08b	PCI-AD11	B15	PCI-AD29	B07a	PCI-GNT-B	B12b	POWER-OK-PLATFORM-3V3	B05e	SDAC-VDDD	B05e	SUPPLY-FAULT	B16b	TUN-VIPER-RX-DATA12	B07c	TXD-UP	B05e
NAND-WEN	B08b	PCI-AD12	B07a	PCI-AD29	B08b	PCI-GNT-C	B12b	POWER-OK-PLATFORM-3V3	B07a	SDA-DMA	B07a	TEMP-SENSOR	B05e	TUN-VIPER-RX-DATA13	B05c	TXD-UP	B08a
ON-MODE	B05e	PCI-AD12	B12b	PCI-AD29	B12b	PCI-GNT-C	B13a	POWER-OK-PLATFORM-3V3	B16a	SDA-DMA	B07e	TS-CLK	B07c	TUN-VIPER-RX-DATA13	B07c	TXD-VIPER	B07a
ON-MODE	B05g	PCI-AD12	B13a	PCI-AD29	B13a	PCI-GNT-C	B13b	PR	B11b	SDA-DMA	B08a	TS-DATA0	B07c	TUN-VIPER-RX-DATA14	B05c	TXD-VIPER	B08a
P0.0	B05e	PCI-AD12	B13b	PCI-AD29	B13b	PCI-INT-1	B12b	PR	B14b	SDA-DMA-BUS1	B06a	TS-DATA1	B07c	TUN-VIPER-RX-DATA14	B07c	TXPNXA-	B05b
P0.0	B05g	PCI-AD12	B15	PCI-AD29	B15	PCI-INT-2	B12b	PROT_DC	B01	SDA-DMA-BUS1	B08a	TS-DATA2	B07c	TUN-VIPER-RX-DATA15	B05c	TXPNXA+	B05b
P0.1	B05e	PCI-AD13	B07a	PCI-AD3	B07a	PCI-INTA	B07a	PROT-AUDIOSUPPLY	B05g	SDA-DMA-BUS2	B04b	TS-DATA3	B07c	TUN-VIPER-RX-DATA15	B07c	TXPNXB-	B05b
P0.1	B05g	PCI-AD13	B12b	PCI-AD3	B12b	PCI-INTA	B12b	PROT-AUDIOSUPPLY	B16a	SDA-DMA-BUS2	B04f	TS-DATA4	B07c	TUN-VIPER-RX-DATA2	B05c	TXPNXB+	B05b
P0.2	B05e	PCI-AD13	B13a	PCI-AD3	B13a	PCI-IRDY	B07a	PSEN	B05e	SDA-DMA-BUS2	B05e	TS-DATA5	B07c	TUN-VIPER-RX-DATA2	B07c	TXPNXC-	B05b
P0.2	B05g	PCI-AD13	B13b	PCI-AD3	B13b	PCI-IRDY	B12b	PSEN	B05g	SDA-DMA-BUS2	B08a	TS-DATA6	B07c	TUN-VIPER-RX-DATA3	B05c	TXPNXC+	B05b
P0.3	B05e	PCI-AD13	B15	PCI-AD3	B15	PCI-IRDY	B13a	PWRDWN	B09d	SDA-I2C4	B07a	TS-DATA7	B07c	TUN-VIPER-RX-DATA3	B07c	TXPNXCLK-	B05b
P0.3	B05g	PCI-AD14	B07a	PCI-AD30	B07a	PCI-IRDY	B13b	R0e	B09d	SDA-I2C4	B07e	TS-SOP	B07c	TUN-VIPER-RX-DATA4	B05c	TXPNXCLK+	B05b
P0.4	B05e	PCI-AD14	B12b	PCI-AD30	B08b	PCI-IRDY	B15	R0o	B09d	SDA-I2C4	B09b	TS-VALID	B07c	TUN-VIPER-RX-DATA4	B07c	TXPNXD-	B05b
P0.4	B05g	PCI-AD14	B13a	PCI-AD30	B12b	PCI-PAR	B07a	R1e	B09d	SDA-I2C4-DISP	B09b	TUNN-REF	B05c	TUN-VIPER-RX-DATA5	B05c	TXPNXD+	B05b
P0.5	B05e	PCI-AD14	B13b	PCI-AD30	B13a	PCI-PAR	B12b	R1o	B09d	SDA-I2C4-DISP	B09c	TUN-SPIDER-RX-BUSY	B05c	TUN-VIPER-RX-DATA5	B07c	TXPNXE-	B05b
P0.5	B05g	PCI-AD14	B15	PCI-AD30	B13b	PCI-PAR	B13a	R2e	B09d	SDA-MM	B07a	TUN-SPIDER-RX-BUSY	B06a	TUN-VIPER-RX-DATA6	B05c	TXPNXE+	B05b
P0.6	B05e	PCI-AD15	B07a	PCI-AD30	B15	PCI-PAR	B13b	R2o	B09d	SDA-MM	B07e	TUN-SPIDER-RX-CLKN	B05c	TUN-VIPER-RX-DATA6	B07c	UART-SWITCH	B05g
P0.6	B05g	PCI-AD15	B12b	PCI-AD31	B07a	PCI-PAR	B15	R3e	B09d	SDA-MM	B08a	TUN-SPIDER-RX-CLKN	B06a	TUN-VIPER-RX-DATA7	B05c	UART-SWITCH	B08a
P0.7	B05e	PCI-AD15	B13a	PCI-AD31	B08b	PCI-PERR	B07a	R3o	B09d	SDA-MM-BUS1	B08a	TUN-SPIDER-RX-CLKP	B05c	TUN-VIPER-RX-DATA7	B07c	UART-SWITCH-5V2	B08a
P0.7	B05g	PCI-AD15	B13b	PCI-AD31	B12b	PCI-PERR	B12b	R4e	B09d	SDA-MM-BUS1	B09b	TUN-SPIDER-RX-CLKP	B06a	TUN-VIPER-RX-DATA8	B05c	UART-SWITCHn	B08a
P2.0	B05e	PCI-AD15	B15	PCI-AD31	B13a	PCI-PERR	B13a	R4o	B09d	SDA-MM-BUS1	B09d	TUN-SPIDER-RX-DATA0	B05c	TUN-VIPER-RX-DATA8	B07c	UDQS	B06b
P2.0	B05g	PCI-AD16	B07a	PCI-AD31	B13b	PCI-PERR	B13b	R5e	B09d	SDA-MM-BUS1	B11b	TUN-SPIDER-RX-DATA0	B06a	TUN-VIPER-RX-DATA9	B05c	UP-3V3	B05f
P2.1	B05e	PCI-AD16	B08b	PCI-AD31	B15	PCI-PERR	B15	R5o	B09d	SDA-MM-BUS2	B08a	TUN-SPIDER-RX-DATA1	B05c	TUN-VIPER-RX-DATA9	B07c	USB1-DM	B07a
P2.1	B05g	PCI-AD16	B12b	PCI-AD4	B07a	PCI-REQ	B07a	R6e	B09d	SDA-MM-BUS2	B14b	TUN-SPIDER-RX-DATA1	B06a	TUN-VIPER-TX-BUSY	B05c	USB1-DM-1	B07a
P2.2	B05e	PCI-AD16	B13a	PCI-AD4	B12b	PCI-REQ	B12b	R6o	B09d	SDA-MM-BUS2	B16a	TUN-SPIDER-RX-DATA10	B05c	TUN-VIPER-TX-BUSY	B07c	USB1-DP	B07a
P2.2	B05g	PCI-AD16	B13b	PCI-AD4	B13a	PCI-REQ	B13a	R7e	B09d	SDA-MM-BUS2	B16b	TUN-SPIDER-RX-DATA10	B06a	TUN-VIPER-TX-CLKN	B05c	USB1-DP-1	B07a
P2.3	B05e	PCI-AD16	B15	PCI-AD4	B13b	PCI-REQ	B13b	R7o	B09d	SDA-MOP	B09b	TUN-SPIDER-RX-DATA11	B05c	TUN-VIPER-TX-CLKN	B07c	USB201-DM1	B07a
P2.3	B05g	PCI-AD17	B07a	PCI-AD4	B15	PCI-REQ-A	B07a	RAS	B06b	SDA-MOP	B09d	TUN-SPIDER-RX-DATA11	B06a	TUN-VIPER-TX-CLKP	B05c	USB201-DM1	B13a
P2.4	B05e	PCI-AD17	B08b	PCI-AD5	B07a	PCI-REQ-A	B12b	RAS	B09d	SDA-TUN	B02	TUN-SPIDER-RX-DATA12	B05c	TUN-VIPER-TX-CLKP	B07c	USB201-DP1	B07a
P2.4	B05g	PCI-AD17	B12b	PCI-AD5	B12b	PCI-REQ-A	B13b	RC	B05e	SDA-TUN	B08a	TUN-SPIDER-RX-DATA12	B06a	TUN-VIPER-TX-DATA0	B05c	USB201-DP1	B13a
P2.5	B05e	PCI-AD17	B13a	PCI-AD5	B13a	PCI-REQ-A	B15	RC	B16a	SDA-UP-SW	B05e	TUN-SPIDER-RX-DATA13	B05c	TUN-VIPER-TX-DATA0	B07c	USB201-OC1	B07a
P2.5	B05g	PCI-AD17	B13b	PCI-AD5	B13b	PCI-REQ-B	B07a	REGIMBEAU	B07a	SDA-UP-VIP	B05e	TUN-SPIDER-RX-DATA13	B06a	TUN-VIPER-TX-DATA1	B05c	USB201-OC1	B13a
P2.6	B05g	PCI-AD17	B15	PCI-AD5	B15	PCI-REQ-B	B12b	REGIMBEAU	B16b	SDA-UP-VIP	B07a	TUN-SPIDER-RX-DATA14	B05c	TUN-VIPER-TX-DATA1	B07c	USB201-PWE1	B07a
P2.6-TEST	B05g	PCI-AD18	B07a	PCI-AD6	B07a	PCI-REQ-C	B12b	RESET-1394	B07a	SDA-UP-VIP	B07e	TUN-SPIDER-RX-DATA14	B06a	TUN-VIPER-TX-DATA10	B05c	USB201-PWE1	B13a
P2.7	B05e	PCI-AD18	B08b	PCI-AD6	B12b	PCI-REQ-C	B13a	RESET-AUDIO	B05e	SDA-UP-VIP	B08a	TUN-SPIDER-RX-DATA15	B05c	TUN-VIPER-TX-DATA10	B07c	USB202-DM2	B07a
P2.7	B05g	PCI-AD18	B12b	PCI-AD6	B13a	PCI-REQ-C	B13b	RESET-AUDIO	B08c	SDM	B05e	TUN-SPIDER-RX-DATA15	B06a	TUN-VIPER-TX-DATA11	B05c	USB202-DM2	B13a
P50	B05e	PCI-AD18	B13a	PCI-AD6	B13b	PCI-SERR	B07a	RESET-ETHERNET	B07a	SDM	B16b	TUN-SPIDER-RX-DATA2	B05c	TUN-VIPER-TX-DATA11	B07c	USB202-DP2	B07a
P50	B16b	PCI-AD18	B13b	PCI-AD6	B15	PCI-SERR	B12b	RESET-ETHERNET	B15	SDM-PNX	B05e	TUN-SPIDER-RX-DATA2	B06a	TUN-VIPER-TX-DATA12	B05c	USB202-DP2	B13a
P50-3V3	B05e	PCI-AD18	B15	PCI-AD7	B07a	PCI-SERR	B13a	RESET-FE-MAIN	B07a	SEL-DV1F	B07a	TUN-SPIDER-RX-DATA3	B05c	TUN-VIPER-TX-DATA12	B07c	USB202-OC2	B13a
P50-HDMI	B05e	PCI-AD19	B07a	PCI-AD7	B12b	PCI-SERR	B13b	RESET-FE-SUB	B07a	SEL-DV3F	B07a	TUN-SPIDER-RX-DATA3	B06a	TUN-VIPER-TX-DATA13	B05c	USB202-PWE2	B13a
P50-HDMI	B11a	PCI-AD19	B08b	PCI-AD7	B13a	PCI-SERR	B15	RESET-Main-NVM	B05e	SEL-IF-LL1	B04g	TUN-SPIDER-RX-DATA4	B05c	TUN-VIPER-TX-DATA13	B07c	USB2-DM	B07a
PARX0-	B11a	PCI-AD19	B12b	PCI-AD7	B13b	PCI-STOP	B07a	RESET-Main-NVM	B08a	SEL-IF-LL1	B07a	TUN-SPIDER-RX-DATA4	B06a	TUN-VIPER-TX-DATA14	B05c	USB2-DM-1	B07a
PARX0-	B11b	PCI-AD19	B13a	PCI-AD7	B15	PCI-STOP	B12b	RESET-MIPS	B05e	SEL-IF-LL2	B04c	TUN-SPIDER-RX-DATA5	B05c	TUN-VIPER-TX-DATA14	B07c	USB2-DP	B07a
PARX0+	B11a	PCI-AD19	B13b	PCI-AD8	B07a	PCI-STOP	B13a	RESET-MIPS	B07a	SEL-IF-LL2	B07a	TUN-SPIDER-RX-DATA5	B06a	TUN-VIPER-TX-DATA15	B05c	USB2-DP-1	B07a
PARX0+	B11b	PCI-AD19	B15	PCI-AD8	B12b	PCI-STOP	B13b	RESET-PNX2015	B05e	SOUND-ENABLE	B07a	TUN-SPIDER-RX-DATA6	B05c	TUN-VIPER-TX-DATA15	B07c	USB-BUS-PW	B07a
PARX1-	B11a	PCI-AD2	B07a	PCI-AD8	B13a	PCI-STOP	B15	RESET-POD-CI	B07a	SOUND-ENABLE	B16a	TUN-SPIDER-RX-DATA6	B06a	TUN-VIPER-TX-DATA2	B05c	USB-OVERCUR	B07a
PARX1-	B11b	PCI-AD2	B12b	PCI-AD8	B13b	PCI-TRDY	B07a	RESET-STBY	B05g	SOUND-ENABLE-VPR	B07a	TUN-SPIDER-RX-DATA7	B05c	TUN-VIPER-TX-DATA2	B07c	VDISP	B09c
PARX1+	B11a	PCI-AD2	B13a	PCI-AD8	B15	PCI-TRDY	B12b	RESET-STBY	B08a	SPDIF-HDMI	B07c	TUN-SPIDER-RX-DATA7	B06a	TUN-VIPER-TX-DATA3	B05c	VISUAL-CHECK	B02
PARX1+	B11b	PCI-AD2	B13b	PCI-AD9	B07a	PCI-TRDY	B13a	RESET-SYSTEM	B05e	SPDIF-HDMI	B11b	TUN-SPIDER-RX-DATA8	B05c	TUN-VIPER-TX-DATA3	B07c	VISUAL-CHECK	B04c
PARX2-	B11a	PCI-AD2	B15	PCI-AD9	B12b	PCI-TRDY	B13b	RESET-SYSTEM	B07a	SPDIF-IN1	B07c	TUN-SPIDER-RX-DATA8	B06a	TUN-VIPER-TX-DATA4	B05c	VREF-AUD-POS	B04b
PARX2-	B11b	PCI-AD20	B07a	PCI-AD9	B13a	PCI-TRDY	B15	RESET-SYSTEM	B07e	SPDIF-IN1	B14c	TUN-SPIDER-RX-DATA9	B05c	TUN-VIPER-TX-DATA4	B07c	VREF-AUD-POS	B05a
PARX2+	B11a	PCI-AD20	B08b	PCI-AD9	B13b	PLL-1V2	B05f	RESET-SYSTEM	B12b	SPDIF-OPT-IN	B14c	TUN-SPIDER-RX-DATA9	B06a	TUN-VIPER-TX-DATA5	B05c	VREF-DDR	B07b
PARX2+	B11b	PCI-AD20	B12b	PCI-AD9	B15	PLL-3V3	B05f	RESET-SYSTEM	B13b	SPDIF-OPT-IN	B16b	TUN-SPIDER-TX-BUSY	B05c	TUN-VIPER-TX-DATA5	B07c	VREF-DDR-PNX	B05d
PARXC-	B11a	PCI-AD20	B13a	PCI-CBE0	B07a	PLL-OUT	B07a	RESET-TM	B06a	SPDIF-OUT1	B07c	TUN-SPIDER-TX-BUSY	B06a	TUN-VIPER-TX-DATA6	B05c	VREFS	B06b
PARXC-	B11b	PCI-AD20	B13b	PCI-CBE0	B12b	PLL-OUT	B08b	RESET-TM	B07a	SPDIF-OUT1	B14c	TUN-SPIDER-TX-CLKN	B05c	TUN-VIPER-TX-DATA6	B07c	VREF-VPR	B07c
PARXC+	B11a	PCI-AD20	B15	PCI-CBE0	B13a	PNX-MA-0	B05d	RESET-UP	B05e	SPDIF-SEL-OUT1	B14c	TUN-SPIDER-TX-CLKN	B06a	TUN-VIPER-TX-DATA7	B05c	VSe	B09d
PARXC+	B11b	PCI-AD21	B07a	PCI-CBE0	B13b	PNX-MA-1	B05d	RESET-UP	B05g	SPI-1	B14b	TUN-SPIDER-TX-CLKP	B05c	TUN-VIPER-TX-DATA7	B07c	VSo	B09d
PARX-DDC-SCL	B11a	PCI-AD21	B08b	PCI-CBE0	B15	PNX-MA-10	B05d	RESET-USB20	B07a	SPI-1	B14c	TUN-SPIDER-TX-CLKP	B06a	TUN-VIPER-TX-DATA8	B05c	WE	B06b
PARX-DDC-SCL	B11b	PCI-AD21	B12b	PCI-CBE1	B07a	PNX-MA-11	B05d	RESET-USB20	B13a	SPI-2	B14b	TUN-SPIDER-TX-DATA0	B05c	TUN-VIPER-TX-DATA8	B07c	WE	B09d
PARX-DDC-SDA	B11a	PCI-AD21	B13a	PCI-CBE1	B08b	PNX-MA-12	B05d	RXD	B08a	SPI-2	B14c	TUN-SPIDER-TX-DATA0	B06a	TUN-VIPER-TX-DATA9	B05c	XIO-ACK	B07a
PARX-DDC-SDA	B11b	PCI-AD21	B13b	PCI-CBE1	B12b	PNX-MA-2	B05d	RXD	B14b	SPI-CLK	B05e	TUN-SPIDER-TX-DATA1	B05c	TUN-VIPER-TX-DATA9	B07c	XIO-ACK	B08b
PB	B11b	PCI-AD21	B15	PCI-CBE1	B13a	PNX-MA-3	B05d	RXD	B16b	SPI-CSB	B05e	TUN-SPIDER-TX-DATA1	B06a	TXAe-	B09c	XIO-D10	B07a
PB	B14b	PCI-AD22	B07a	PCI-CBE1	B13b	PNX-MA-4	B05d	RXD-UP	B05e	SPI-OUT	B14b	TUN-SPIDER-TX-DATA10	B05c	TXAe-	B09d	XIO-D11	B07a
PBRX0-	B11a	PCI-AD22	B08b	PCI-CBE1	B15	PNX-MA-5	B05d	RXD-UP	B08a	SPI-OUT	B14c	TUN-SPIDER-TX-DATA10	B06a	TXAe+	B09c	XIO-D12	B07a
PBRX0-	B11b	PCI-AD22	B12b	PCI-CBE2	B07a	PNX-MA-6	B05d	RXD-VIPER	B07a	SPI-PROG	B05e	TUN-SPIDER-TX-DATA11	B05c	TXAe+	B09d	XIO-D13	B07a
PBRX0+	B11a	PCI-AD22	B13a	PCI-CBE2	B08b	PNX-MA-7	B05d	RXD-VIPER	B08a	SPI-PROG	B16b	TUN-SPIDER-TX-DATA11	B06a	TXAo-	B09c	XIO-D14	B07a
PBRX0+	B11b	PCI-AD22	B13b	PCI-CBE2	B12b	PNX-MA-8	B05d	SCL-AMBI	B09b	SPI-PROG-PNX	B05e	TUN-SPIDER-TX-DATA12	B05c	TXAo-	B09d	XIO-D15	B07a
PBRX1-	B11a	PCI-AD22	B15	PCI-CBE2	B13a	PNX-MA-9	B05d	SCL-AMBI	B16a	SPI-SDI	B05e	TUN-SPIDER-TX-DATA12	B06a	TXAo+	B09c	XIO-D8	B07a
PBRX1-	B11b	PCI-AD23	B07a	PCI-CBE2	B13b	PNX-MBA0	B05d	SCL-DMA	B07a	SPI-SDO	B05e	TUN-SPIDER-TX-DATA13	B05c	TXAo+	B09d	XIO-D9	B07a
PBRX1+	B11a	PCI-AD23	B08b	PCI-CBE2	B15	PNX-MBA1	B05d	SCL-DMA	B07e	SPI-WP	B05e	TUN-SPIDER-TX-DATA13	B06a	TXBe-	B09c	XIO-SEL0	B07a
PBRX1+	B11b	PCI-AD23	B12b	PCI-CBE3	B07a	PNX-MCAS	B05d	SCL-DMA	B08a	S-SCL-PIP	B02	TUN-SPIDER-TX-DATA14	B05c	TXBe-	B09d	XIO-SEL0	B08b
PBRX2-	B11a	PCI-AD23	B13a	PCI-CBE3	B12b	PNX-MCKE	B05d	SCL-DMA-BUS1	B06a	S-SCL-PIP	B03	TUN-SPIDER-TX-DATA14	B06a	TXBe+	B09c	XIO-SEL1	B07a
PBRX2-	B11b	PCI-AD23	B13b	PCI-CBE3	B13a	PNX-MCLK-N	B05d	SCL-DMA-BUS1	B08a	S-SDA-PIP	B02	TUN-SPIDER-TX-DATA15	B05c	TXBe+	B09d	XIO-SEL2	B07a
PBRX2+	B11a	PCI-AD23	B15	PCI-CBE3	B13b	PNX-MCLK-P	B05d	SCL-DMA-BUS2	B04b	S-SDA-PIP	B03	TUN-SPIDER-TX-DATA15	B06a	TXBo-	B09c	Y	B11b
PBRX2+	B11b	PCI-AD24	B07a	PCI-CBE3	B15	PNX-MCS-0	B05d	SCL-DMA-BUS2	B04f	STANDBY	B05e	TUN-SPIDER-TX-DATA2	B05c	TXBo-	B09d	Y	B14b
PBRXC-	B11a	PCI-AD24	B08b	PCI-CLK-ETHERNET	B08b	PNX-MDATA-0	B05d	SCL-DMA-BUS2	B05e	STANDBY	B16a	TUN-SPIDER-TX-DATA2	B06a	TXBo+	B09c	Y-CVBS-MON-OUT	B08b
PBRXC-	B11b	PCI-AD24	B12b	PCI-CLK-ETHERNET	B15	PNX-MDATA-1	B05d	SCL-DMA-BUS2	B08a	STBY-WP-NAND-FLASH	B05e	TUN-SPIDER-TX-DATA3	B05c	TXBo+	B09d	Y-CVBS-MON-OUT	B16b
PBRXC+	B11a	PCI-AD24	B13a	PCI-CLK-SLOT	B08b	PNX-MDATA-10	B05d	SCL-I2C4	B07a	STBY-WP-NAND-FLASH	B08b	TUN-SPIDER-TX-DATA3	B06a	TXCe-	B09c		
PBRXC+	B11b	PCI-AD24	B13b	PCI-CLK-SLOT	B12b	PNX-MDATA-11	B05d	SCL-I2C4	B07e	STROBE1N-MAIN	B04a	TUN-SPIDER-TX-DATA4	B05c	TXCe-	B09d		
PBRX-DDC-SCL	B11a	PCI-AD24	B15	PCI-CLK-SLOT	B13b	PNX-MDATA-12	B05d	SCL-I2C4	B09b	STROBE1N-MAIN	B05a	TUN-SPIDER-TX-DATA4	B06a	TXCe+	B09c		
PBRX-DDC-SCL	B11b	PCI-AD25	B07a	PCI-CLK-SPIDER	B06a	PNX-MDATA-13	B05d	SCL-I2C4-DISP	B09b	STROBE1N-SUB	B04e	TUN-SPIDER-TX-DATA5	B05c	TXCe+	B09d		
PBRX-DDC-SDA	B11a	PCI-AD25	B08b	PCI-CLK-SPIDER	B08b	PNX-MDATA-14	B05d	SCL-I2C4-DISP	B09c	STROBE1N-SUB	B05a	TUN-SPIDER-TX-DATA5	B06a	TXCLKe-	B09c		
PBRX-DDC-SDA	B11b	PCI-AD25	B12b	PCI-CLK-USB20	B08b	PNX-MDATA-15	B05d	SCL-MM	B07a	STROBE1P-MAIN	B04a	TUN-SPIDER-TX-DATA6	B05c	TXCLKe-	B09d		
PCI-AD0	B07a	PCI-AD25	B13a	PCI-CLK-USB20	B13a	PNX-MDATA-2	B05d	SCL-MM	B07e	STROBE1P-MAIN	B05a	TUN-SPIDER-TX-DATA6	B06a	TXCLKe+	B09c		
PCI-AD0	B08b	PCI-AD25	B13b	PCI-CLK-VPR	B07a	PNX-MDATA-3	B05d	SCL-MM	B08a	STROBE1P-SUB	B04e	TUN-SPIDER-TX-DATA7	B05c	TXCLKe+	B09d		
PCI-AD0	B12b	PCI-AD25	B15	PCI-CLK-VPR	B08b	PNX-MDATA-4	B05d	SCL-MM-BUS1	B08a	STROBE1P-SUB	B05a	TUN-SPIDER-TX-DATA7	B06a	TXCLKo-	B09c		

F_15710_133.eps
220905

Layout SSB (v2) (Overview Top Side)

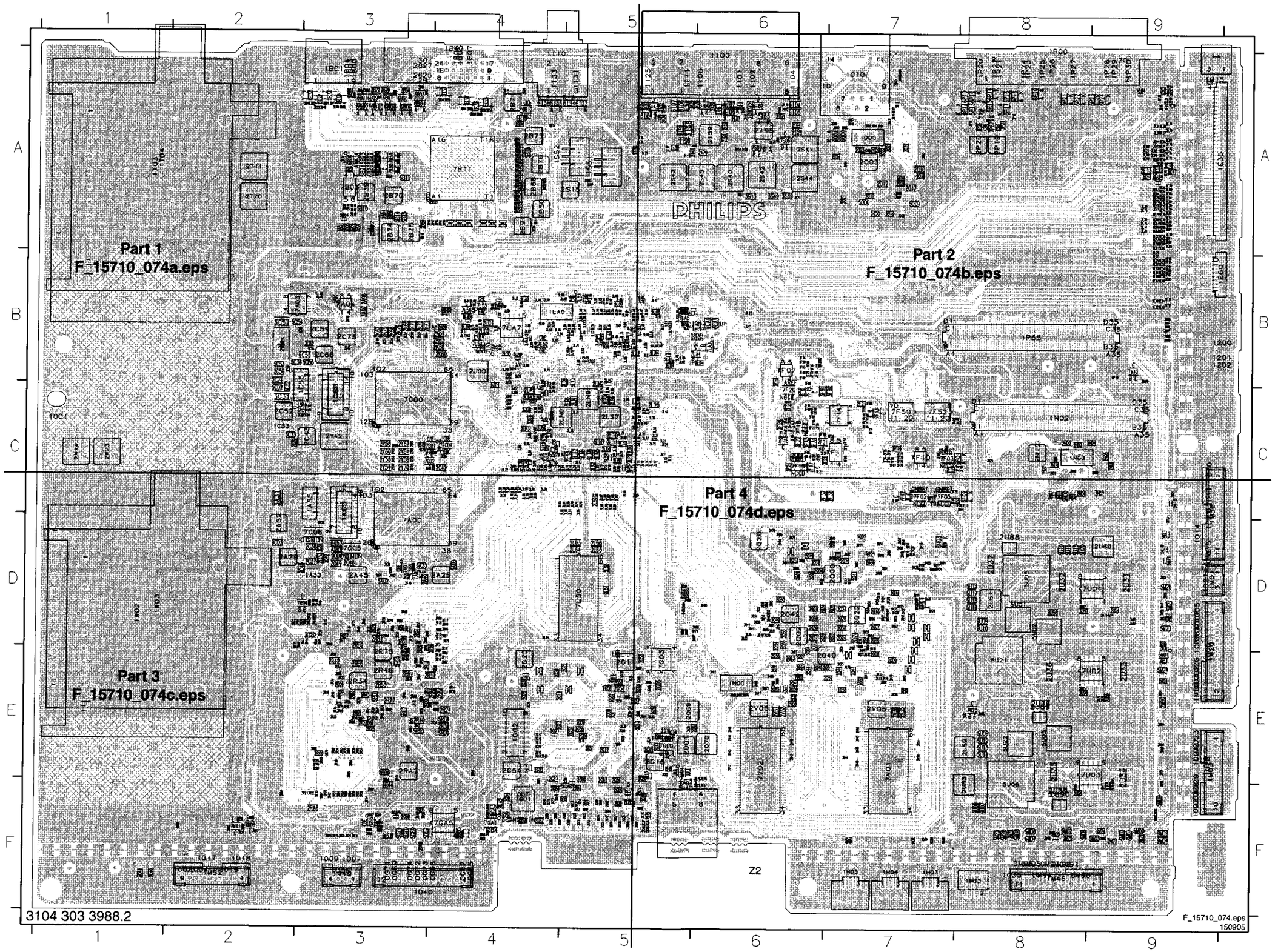

Mapping SSB (v2) (Top Side)

1A33 D3 2C46 D3 2G56 F4 2K58 B4 2LU2 C5 2Q47 E7 2R97 E3 3B23 A3 3F86 C7 3H74 E7 3LB3 B5 3LP5 C5 3R15 D4 5G71 F3 6I04 A6 9E14 A9 9H26 D7
1A53 C3 2C47 D3 2G57 F4 2K59 B3 2LU3 C5 2Q48 E6 2R98 E3 3B24 A4 3F88 C7 3H75 E6 3LB4 B4 3LP6 C5 3R16 D4 5GB5 F3 6I05 A6 9E16 A9 9H29 D7
1A55 C2 2C48 D3 2G67 F4 2K60 B4 2LU4 C5 2Q49 D6 2R99 D3 3B26 A3 3F90 C7 3H79 D7 3LB5 B4 3LT0 B4 3R17 D4 5H02 E6 6I06 A5 9E18 A9 9H30 D6
1A63 D3 2C49 D3 2G68 F3 2K61 B4 2LU5 C5 2Q50 D6 2RA1 E3 3B28 A3 3FA0 C6 3H82 E6 3LB6 B4 3LT1 B4 3R18 E3 5I01 A6 6I07 A5 9E19 A9 9H31 D7
1B01 A3 2C52 C2 2G69 F3 2K62 B3 2M03 E9 2Q51 E7 2RA2 E3 3B29 A4 3FA1 C6 3H83 E6 3LB7 B5 3LT2 B4 3R19 D3 5I02 A5 6I32 A5 9E20 A9 9H32 D7
1B30 A3 2C53 B2 2G74 F3 2K63 B4 2M04 E9 2Q52 E7 2RA3 E3 3B31 A3 3FA2 C6 3H84 D6 3LB8 B5 3LT3 B4 3R21 F3 5J00 C4 6I34 A4 9E21 A9 9H33 D7
1B31 A3 2C56 B2 2G80 E5 2K64 B3 2M06 E9 2Q53 D6 2RA4 E3 3B33 A3 3FA3 C6 3H86 D6 3LB9 B5 3LT4 B4 3R22 F3 5J01 C4 6I36 A4 9E22 B9 9H34 D7
1B32 A3 2C59 B3 2G81 E4 2K67 B3 2M13 D9 2Q54 D6 2RA5 E3 3B48 A3 3FA4 C6 3H87 E6 3LC0 B5 3LT5 B4 3R37 D3 5J02 C4 6I38 A4 9E23 B9 9H35 D7
1B33 A3 2C60 B2 2G82 E4 2K68 B3 2M14 F3 2Q55 D6 2RA6 E4 3B49 A3 3FA5 C6 3H88 D6 3LC1 B4 3LT6 B4 3R38 D3 5J03 C4 6I43 A5 9E24 A9 9H50 D7
1B34 A4 2C62 B3 2G83 F5 2K69 B3 2M15 F3 2Q56 E6 2RA7 E4 3B50 A4 3FA6 C6 3H90 D7 3LC2 B4 3LT7 B4 3R39 D3 5J04 C4 6I60 A6 9E25 B9 9H51 D7
1B35 A4 2C64 B2 2G84 F4 2K71 B3 2M16 F3 2Q57 E7 2RA8 F3 3B51 A4 3FA7 C6 3H93 D6 3LC3 B4 3LT8 B4 3R40 D3 5J05 C4 6I61 A6 9E26 B9 9H52 D7
1B36 A4 2C66 B3 2G85 E5 2K72 B3 2M47 D9 2Q58 E7 2RA9 E4 3B52 A4 3FA8 C6 3H94 D6 3LC4 B5 3LU2 B4 3R42 D3 5J06 C4 6I62 A6 9E27 B9 9H53 D7
1B37 A4 2C73 B3 2G86 E5 2K75 B3 2M49 E9 2Q59 E6 2RB2 D3 3B53 A4 3FA9 B6 3H97 D7 3LC5 B5 3LU3 B4 3R43 D3 5J07 C4 6I63 A6 9E29 A9 9H54 D7
1B40 A4 2E00 A9 2G87 E5 2K76 B3 2M51 D9 2Q63 E6 2RB3 D3 3B54 A3 3FB1 C6 3H98 D7 3LC8 B5 3LU4 B4 3R44 D3 5J08 B4 6I64 A5 9E31 A9 9H55 D7
1C33 C2 2E01 A9 2G88 F5 2K77 B3 2M58 D9 2Q64 E6 2RB5 E3 3B55 A4 3FB2 C7 3H99 E7 3LC9 B5 3LU5 B4 3R45 D3 5J09 B4 6LA0 B6 9E32 A9 9H56 D7
1C53 B3 2E02 A9 2G89 F5 2L01 C5 2M67 F9 2Q65 E6 2S15 A4 3B56 A4 3FB3 C7 3I02 A5 3LD0 B5 3M02 D9 3R46 D3 5L50 C5 6LA1 B6 9E33 A9 9H57 D7
1C55 C3 2E03 A9 2G90 F5 2L02 C5 2M69 F8 2Q66 D7 2S40 A6 3B57 A4 3G00 F4 3I04 A6 3LD1 B5 3M03 D9 3R47 D3 5LA1 B5 6M01 E9 9E35 A9 9H59 D7
1C63 C3 2E04 A9 2G91 F5 2L03 C5 2M72 F9 2Q67 E6 2S41 A6 3B58 A4 3G01 F4 3I05 A6 3LD2 B5 3M07 D9 3R48 D3 5LA2 B5 6O00 A7 9E37 A9 9I37 A5
1D40 F3 2E05 A9 2G92 F5 2L09 B5 2M73 F9 2Q69 E6 2S42 A6 3B59 A4 3G02 F4 3I16 A6 3LD3 B5 3M08 D9 3R49 D3 5LA3 C4 6O01 A7 9E38 A9 9I91 A5
1E35 A9 2E06 A9 2G93 F5 2L10 C5 2M74 F9 2Q70 E6 2S43 A5 3B60 A4 3G06 E5 3I27 A6 3LD4 B5 3M21 C9 3R50 F3 5LA4 B5 6P10 A8 9E40 F1 9I94 A6
1E60 B9 2E12 B9 2G94 F5 2L11 C5 2M75 F8 2Q73 D6 2S44 A6 3B61 A4 3G07 E5 3I28 A6 3LD5 B5 3M24 F3 3R51 F3 5LN0 C5 6P11 A8 9E42 F1 9L01 B4
1G02 E4 2E13 A9 2G95 F5 2L12 C5 2M76 F8 2Q74 D7 2S45 A5 3B62 A4 3G08 E5 3I29 A5 3LD6 B5 3M25 F3 3R52 F3 5LN1 C4 6P12 A8 9E46 A9 9L02 B4
1H00 E6 2E14 A9 2G96 F5 2L13 C5 2M78 F8 2R00 E9 2T11 A2 3B63 A3 3G09 E5 3I30 A5 3LD7 B5 3M36 F9 3R53 F3 5LN2 B5 6P13 A8 9E47 B9 9L06 B5
1H01 E6 2E15 A9 2G97 F5 2L16 C5 2M81 D9 2R01 F2 2T20 A2 3B64 A3 3G10 E5 3I35 A5 3LD8 B5 3M50 E9 3R54 E3 5LN3 C5 6P14 A8 9E48 B9 9L07 B5
1H03 F7 2E16 A9 2G98 F5 2L17 C5 2M82 E9 2R02 F3 2U31 D9 3B65 A3 3G11 E4 3I36 A5 3LD9 B5 3M54 E9 3R55 E3 5LN4 C5 6P15 A8 9E49 B9 9L10 B5
1H04 F7 2E17 A9 2G99 F5 2L18 C5 2M85 F9 2R03 E3 2U32 D8 3B66 A3 3G12 E4 3I37 A5 3LE0 B5 3M55 F2 3R56 E3 5LN5 C5 6P16 A8 9E50 B9 9L40 B5
1H05 F7 2E18 A9 2GA2 F4 2L19 C5 2M90 E9 2R04 F3 2U33 E9 3B67 A3 3G13 E4 3I41 A5 3LE1 B5 3M56 F2 3R57 E3 5LN6 C5 6P17 A8 9E51 B9 9L41 B5
1I00 A5 2E30 A9 2GA5 F5 2L20 C5 2M92 F2 2R05 E9 2U34 F9 3B68 A3 3G14 E4 3I42 A5 3LE2 B5 3M57 F2 3R58 F3 5LN7 C5 6P18 A8 9E52 B9 9LA0 B4
1I07 A5 2E31 A9 2GA6 F5 2L21 C5 2M93 F2 2R06 E9 2U35 E8 3B69 A3 3G15 E4 3I43 A5 3LE3 B5 3M58 F2 3R59 F3 5LN8 C5 6P20 A8 9E53 B9 9LA2 B4
1I10 A5 2E53 B9 2GB0 F3 2L22 C4 2M96 B9 2R07 F3 2U36 E8 3B70 A3 3G16 E4 3I50 A6 3LE4 B5 3M60 B9 3R60 F3 5LN9 B4 6P21 A8 9E54 B9 9LA3 B5
1LA0 B4 2E54 A9 2GB1 F3 2L23 C4 2M97 B9 2R08 E9 2U37 D8 3B71 A3 3G17 E4 3I51 A6 3LE5 B5 3M61 B9 3R61 F3 5M00 F9 6P22 A8 9E55 A9 9LA4 B5
1M01 D9 2E56 A9 2GB4 F4 2L25 C5 2M98 B9 2R09 E3 2U38 E8 3B72 A3 3G20 F5 3I58 A5 3LE6 B5 3M62 B9 3R62 E3 5M01 F9 6P23 A8 9E56 A9 9LA5 B5
1M03 E9 2E58 A9 2GB5 F4 2L26 C4 2N00 C9 2R10 E3 2U39 F8 3B73 A4 3G21 F5 3I61 A6 3LE7 B5 3N08 C8 3R63 E3 5M02 F9 6P24 A9 9E57 A9 9LA6 B4
1M15 A9 2E60 A9 2GB6 F4 2L27 C5 2N01 C8 2R11 E4 2U58 D8 3B75 A4 3G22 E5 3I62 A5 3LE8 B5 3N25 C8 3R64 E3 5M03 F9 7A00 C3 9E58 A9 9LA7 B5
1M20 D9 2E62 A9 2GB7 F4 2L28 C5 2N02 C8 2R12 E3 2U59 E8 3B89 A4 3G23 E5 3I64 A5 3LE9 B5 3N27 C8 3R65 E3 5M04 F8 7A01 D3 9E59 A9 9LB4 B6
1M36 D9 2E64 A9 2GB8 F5 2L29 C5 2N03 C8 2R13 D3 2U60 D9 3B90 A3 3G26 E4 3J00 C4 3LF0 B5 3N28 C8 3R66 E3 5M05 F8 7A02 D3 9E60 A9 9LB5 B5
1M46 F9 2E66 A9 2GB9 F5 2L40 B4 2N04 C9 2R14 F3 2U61 D8 3B91 A3 3G30 E5 3J01 C4 3LF1 B6 3N29 C8 3R67 E3 5M06 F8 7A03 B3 9E61 A9 9LC4 B5
1M49 F3 2E68 A9 2GC0 F5 2L41 B6 2N05 C9 2R18 E3 2U63 E8 3B92 A3 3G31 E5 3J03 C4 3LF2 B5 3O00 A7 3R68 E3 5M07 F8 7A04 B3 9E62 A9 9LC5 B5
1M52 F2 2E70 A9 2GC1 F5 2L47 B5 2N06 C9 2R20 E3 2U73 D9 3B93 A3 3G32 E4 3J07 C4 3LF3 B5 3O01 A7 3R69 E3 5M08 F8 7B03 A3 9E63 A9 9LC6 B5
1M63 F8 2E72 A9 2GC2 F5 2L48 B5 2N07 C9 2R21 E3 2U74 D9 3B94 A4 3G33 E4 3J08 C4 3LF4 B6 3O02 A7 3R70 E3 5M09 F9 7B11 A4 9E64 A9 9LC7 B5
1N00 C9 2E74 A9 2GC3 F5 2L50 D5 2N08 C8 2R22 E3 2U75 E9 3B95 A4 3G34 E5 3J09 C4 3LF5 B6 3O03 A7 3R71 D4 5M17 D9 7B30 A3 9E65 A9 9M02 F8
1N02 C8 2E76 A9 2GC4 F5 2L51 D5 2N10 C8 2R23 E3 2U76 F9 3B96 A3 3G35 E5 3J11 C4 3LF7 B6 3O04 A7 3R72 D4 5M18 C9 7B31 A3 9E66 A9 9M03 F9
1O00 A7 2E78 A9 2GC5 F5 2L59 C5 2N11 C8 2R24 E4 2U77 E9 3B97 A3 3G36 F5 3L00 C4 3LF8 B4 3O05 A7 3R73 F3 5M19 D9 7C00 B3 9E67 A9 9M04 F9
1O10 A7 2E80 A9 2GC6 F5 2L60 C5 2N12 C8 2R25 E3 2U78 E9 3B98 A4 3G37 F5 3L01 C4 3LF9 B5 3O06 A7 3R74 E3 5M21 D9 7C01 C4 9E68 A9 9M08 B9
1P00 A7 2E85 B9 2GC7 F5 2L61 D4 2O00 A7 2R26 E3 2U85 E8 3C00 C3 3G52 F5 3L02 C4 3LG0 B5 3O07 A7 3R75 E3 5M23 D9 7C02 C3 9E69 A9 9M09 F2
1P55 B8 2E87 B9 2GC8 F5 2L62 B5 2O01 A7 2R27 E3 2U86 F8 3C01 C3 3G53 F5 3L03 C4 3LG1 B5 3O08 A7 3R80 D3 5M24 E9 7C05 D3 9E70 A9 9P10 B9
1S51 A5 2E89 B9 2GC9 F5 2L63 D5 2O02 A7 2R28 E3 2U87 D8 3C02 C4 3G54 F5 3L04 C4 3LG2 B5 3O09 A7 3R81 D3 5M26 D9 7C06 D2 9E71 A9 9Q28 F7
1S52 A5 2E90 A9 2GD0 F5 2L64 D5 2O03 A7 2R29 E3 2U88 D8 3C03 C3 3G66 E5 3L05 C4 3LG3 B5 3O10 A7 3R82 D3 5M27 D9 7C07 C3 9E72 A9 9Q29 F7
1T03 B1 2E91 B9 2GD1 F5 2L65 D5 2O04 A7 2R30 E3 2U89 E8 3C04 C3 3G67 F3 3L06 C4 3LG4 B4 3O11 A7 3R83 D2 5M28 F8 7C56 C3 9E73 A9 9Q30 F7
1T04 B1 2E92 A9 2GD2 F5 2L66 D5 2O05 A7 2R31 E3 2U90 F8 3C05 C4 3G68 F3 3L07 C4 3LG5 B4 3O12 A7 3R85 D3 5M29 F8 7F02 C7 9E74 A9 9Q32 F7
1W02 C1 2E93 A9 2GE0 F4 2LA0 B4 2O06 A7 2R32 D3 2V02 E6 3C06 C4 3G69 F3 3L08 C4 3LG6 B4 3O13 A7 3R88 E3 5N00 C8 7F03 C7 9E75 A9 9Q33 F7
1W03 E1 2E94 A9 2GE1 F4 2LA1 B4 2O07 A7 2R33 E3 2V03 E6 3C07 C4 3G73 F3 3L09 C4 3LG7 B5 3O14 A7 3R89 E3 5N01 C8 7F05 C7 9E76 A9 9Q34 F7
2A01 D3 2E95 B9 2GE2 F4 2LA2 B5 2O10 A7 2R34 E3 2V05 E7 3C08 C3 3G77 F5 3L10 C4 3LG8 B5 3P11 A8 3R90 E4 5N02 C8 7F07 B6 9E77 A9 9R01 D3
2A10 D3 2E96 B9 2GE3 F4 2LA3 B5 2O11 A7 2R35 E3 2V06 E6 3C09 C4 3G78 F5 3L11 C5 3LG9 B4 3P13 A8 3S06 A5 5O00 A7 7F10 C7 9E78 A9 9R02 E4
2A25 D4 2F12 C7 2GE4 F5 2LA4 C4 2O12 A7 2R36 E3 2V35 E7 3C31 C2 3G79 F5 3L12 C5 3LH0 C5 3P16 A8 3S07 A5 5O01 A7 7F11 C7 9E79 A9 9R03 E3
2A29 D2 2F14 C7 2GE5 F5 2LA5 C4 2O17 A7 2R37 E3 2V36 E7 3C51 B2 3G80 F3 3L13 C5 3LH1 C5 3P18 A8 3S13 A6 5O01 E6 7F12 C7 9E80 A9 9R04 E3
2A42 D3 2F15 C7 2GE6 F5 2LB0 B5 2O18 A7 2R38 E4 2V37 E6 3C52 B3 3G82 F3 3L14 C5 3LH2 B5 3P31 A8 3S46 A6 5O02 E6 7F13 C7 9E81 A9 9R05 E3
2A45 D3 2F16 B6 2GE7 F5 2LB1 B5 2O19 A7 2R40 E3 2V38 E6 3E01 A9 3GA1 F4 3L15 C5 3LH3 C4 3P33 A8 3S49 A6 5O03 E6 7F14 C7 9E82 A9 9R06 E4
2A52 D2 2F19 C7 2GE8 F5 2LB2 B5 2O20 A7 2R41 D3 2V40 E6 3E02 A9 3GA2 F4 3L16 C5 3LH4 C4 3P35 A8 3S50 A6 5O04 D7 7F15 C6 9E83 A9 9R06 D3
2A88 B4 2F21 C6 2GE9 F5 2LC0 B4 2O21 A7 2R42 F3 2V41 E6 3E03 A9 3GA3 F4 3L17 C5 3LH5 B5 3P36 A8 3S63 A6 5O05 D7 7F16 C6 9E84 A9 9R13 F3
2A89 B4 2F23 C7 2H00 D5 2LC1 B4 2O22 A7 2R43 E3 2V42 E6 3E04 A9 3GA7 F4 3L18 C5 3LH6 B4 3Q00 D7 3S68 A6 5R00 E4 7F17 C6 9E85 A9 9R14 E3
2A93 B3 2F24 C6 2H02 D5 2LC2 B4 2O23 A7 2R44 F3 2V43 E6 3E05 A9 3GA8 F3 3L19 C5 3LH7 B5 3Q03 D7 3S69 A6 5R01 E3 7F18 C6 9E86 A9 9R15 E3
2A96 B3 2F25 C6 2H06 D7 2LC3 B4 2O24 A7 2R46 E3 2V44 E6 3E06 A9 3GB1 F4 3L20 C4 3LH8 B5 3Q06 D7 3S70 A6 5R02 E3 7F19 C6 9E87 A9 9R17 D2
2A97 B3 2F26 C6 2H07 D7 2LN0 C4 2O25 A7 2R47 E3 2V45 E6 3E25 A9 3GB2 E5 3L21 C5 3LH9 B5 3Q11 D7 3S71 A6 5R03 E3 7F20 C6 9E88 A9 9R20 D3
2A99 B3 2F27 C6 2H08 E6 2LN1 C5 2O26 A7 2R48 D3 2V46 E7 3E26 A9 3GB5 E5 3L22 C4 3LJ0 B5 3Q12 D7 3U54 D9 5R04 E4 7F21 C6 9E90 A9 9R21 D3
2B00 A3 2F28 C6 2H09 E6 2LN2 B5 2O27 A7 2R49 E4 2V47 E7 3E27 A9 3GB6 E5 3L23 C5 3LJ1 B5 3Q13 D7 3U55 F9 5R05 E3 7F50 C7 9E92 A9 9R22 D3
2B04 A3 2F33 C7 2I01 A6 2LN3 C4 2O28 A7 2R50 E3 2V48 E7 3E28 A9 3GB8 F4 3L24 C4 3LJ2 C4 3Q14 D7 3U56 E9 5R06 E3 7F52 C7 9E94 A9 9R23 D2
2B05 A3 2F37 C6 2I02 A5 2LN4 C4 2P19 A8 2R51 E3 2V49 E7 3E30 A9 3GC8 F3 3L25 C5 3LJ3 B4 3Q15 D7 3U66 E8 5U01 D8 7G00 E5 9E96 A9 9R25 E3
2B06 A3 2F38 C7 2I03 A6 2LN5 C5 2P20 A8 2R52 E3 2V50 E7 3E31 A9 3GC9 F4 3L26 C4 3LJ4 B5 3Q17 F6 3U67 E8 5U02 D8 7G01 F4 9F04 B6 9R26 E3
2B07 A3 2G00 E5 2I20 A6 2LN6 C4 2Q00 D7 2R53 E3 2V51 E7 3F01 C7 3H00 D6 3L27 C5 3LJ5 B5 3Q18 E6 3U96 F8 5U03 E8 7G03 E5 9F05 B6 9R50 E4
2B39 A3 2G01 E5 2I21 A5 2LN7 C4 2Q01 E6 2R54 E4 2W14 C1 3F02 C7 3H01 D7 3L28 C4 3LJ6 B5 3Q19 E6 3U97 D8 5U05 D8 7G66 F3 9F06 C7 9R51 E4
2B40 A4 2G02 E5 2I35 A5 2LN8 C4 2Q02 D6 2R55 E3 2W23 C1 3F03 C7 3H02 E7 3L29 C5 3LJ7 B5 3Q22 F6 3U98 E8 5U06 F8 7GA1 F4 9F07 C7 9U07 F8
2B41 A4 2G03 E5 2I36 A5 2LN9 B5 2Q04 D6 2R56 D3 2Y42 C3 3F04 C7 3H03 E6 3L30 C4 3LJ8 B5 3Q25 E7 3UB1 D9 5U09 E8 7GA5 F4 9F08 C7 9U08 F8
2B42 A4 2G04 E5 2I37 A6 2LP0 C4 2Q05 D6 2R57 D3 2Y49 C3 3F06 C6 3H04 D5 3L31 C5 3LJ9 B5 3Q27 E7 3UB2 D9 5U10 D8 7L50 D4 9F09 C6 9U09 D8
2B43 A4 2G05 E5 2I38 A5 2LP1 C5 2Q06 E7 2R58 D3 2Y51 C3 3F07 B6 3H05 D7 3L32 C4 3LK0 B5 3Q28 E7 3V24 E6 5U11 D8 7L51 B5 9F11 C6 9U10 D8
2B44 A4 2G06 E5 2I41 A5 2LP2 C5 2Q07 D7 2R59 D3 2Y53 C3 3F08 B6 3H07 D7 3L33 C5 3LK1 B5 3Q30 E5 3V25 E6 5U12 E8 7L52 B4 9F12 C7
2B45 A4 2G07 E5 2I58 A6 2LP3 C4 2Q08 D6 2R60 E3 2Y54 C3 3F10 C7 3H08 E6 3L34 C4 3LK2 B5 3Q31 D7 3V44 E7 5U13 E8 7L53 B4 9F19 C6
2B46 A4 2G08 E5 2I59 A6 2LP4 C5 2Q09 E7 2R61 E3 2Y55 C3 3F11 C7 3H09 E7 3L35 C5 3LK3 B5 3Q32 E7 3V78 E7 5U14 E8 7L54 B4 9F21 C6
2B47 A4 2G09 E5 2I61 A6 2LP5 C5 2Q10 D7 2R62 D3 2Y56 C3 3F12 C8 3H10 E7 3L38 C5 3LK4 B5 3Q33 D6 5A02 D3 5U15 D8 7L55 B4 9F22 C6
2B48 A4 2G10 E5 2I70 A6 2LP6 C4 2Q11 D7 2R63 D3 2Y57 C3 3F13 C8 3H11 E7 3L39 C5 3LK5 B5 3Q34 D6 5A03 D4 5U16 D8 7L56 B4 9F23 C6
2B50 A4 2G11 E5 2I91 A6 2LP7 C5 2Q12 D6 2R64 D3 2Y58 C3 3F21 C7 3H13 E7 3L42 B6 3LK6 B5 3Q35 D6 5A33 D3 5U17 D8 7LA2 B5 9F24 C7
2B52 A4 2G12 E5 2I94 A6 2LP8 C4 2Q13 D6 2R65 D3 2Y59 C3 3F22 C7 3H14 D6 3L43 C5 3LK7 B5 3Q36 D6 5B01 A3 5U18 D8 7LA3 B6 9F25 C7
2B54 A4 2G13 E5 2I95 A6 2LP9 C4 2Q14 D7 2R66 D3 2Y60 C3 3F23 C7 3H15 E7 3L44 C4 3LK8 B5 3Q37 D6 5B10 A3 5U19 D8 7LA4 B5 9F26 C7
2B61 A3 2G14 E5 2I98 A5 2LR1 C5 2Q15 D7 2R67 D3 2Y61 C3 3F25 C7 3H16 E6 3L45 B5 3LK9 B5 3Q38 D6 5B12 A3 5U20 D8 7LA5 B5 9F27 C6
2B67 A3 2G15 E5 2J00 B4 2LR2 C5 2Q16 D7 2R68 D3 2Y62 C3 3F26 C7 3H17 D6 3L47 B5 3LL0 B5 3Q39 D6 5B13 A4 5U21 E8 7LA7 B4 9G00 E5
2B68 A4 2G16 E5 2J01 C4 2LR3 C4 2Q17 E6 2R69 E3 2Y64 C3 3F27 C6 3H18 D7 3L48 B5 3LL1 B5 3Q41 D6 5B14 A3 5U22 E8 7M09 F2 9G01 E5
2B70 A3 2G17 E5 2J02 C4 2LR4 C4 2Q18 D7 2R70 E3 2Y67 C3 3F50 C8 3H19 D7 3L52 B5 3LL2 B5 3Q43 D6 5B15 A3 6A53 D3 7M11 F2 9G66 F3
2B71 A4 2G18 E5 2J03 C4 2LR5 C5 2Q19 D6 2R71 D3 2Y68 C3 3F54 C7 3H20 D7 3L53 B5 3LL3 B5 3Q45 D6 5B16 A4 6B00 A3 7M12 B9 9G67 F3
2B73 A4 2G19 E4 2J05 C4 2LR6 C5 2Q20 D6 2R72 E3 2Y70 C3 3F55 C6 3H21 D7 3L72 B5 3LL4 B5 3Q47 D6 5C02 C2 6B01 A3 7P87 A8 9H01 D7
2B74 A3 2G20 E4 2J06 C4 2LR7 C5 2Q21 E6 2R73 D3 3A00 D3 3F56 C6 3H28 D7 3L73 B5 3LL5 B5 3Q49 D6 5C33 C2 6B02 A3 7R04 D3 9H02 D5
2B75 A3 2G21 E5 2J08 C4 2LR8 C5 2Q22 D7 2R74 E3 3A01 D3 3F57 C6 3H29 D7 3L74 B5 3LL6 B5 3Q51 D6 5C34 B2 6B03 A3 7S03 A6 9H03 D7
2B76 A4 2G22 E4 2J10 C4 2LR9 C5 2Q24 D7 2R75 D3 3A02 D3 3F58 B6 3H31 D7 3L78 C5 3LL7 B5 3Q53 D6 5C52 C2 6B04 A3 7S06 A6 9H04 D7
2B86 A4 2G23 E4 2J12 C4 2LS0 C5 2Q25 D7 2R76 D3 3A05 D3 3F59 B6 3H32 D7 3L90 C5 3LL8 B5 3Q55 D6 5C53 B2 6B05 A3 7U01 D9 9H05 D6
2B88 A3 2G24 E4 2J13 C4 2LS1 C5 2Q26 D7 2R77 E3 3A06 D3 3F60 C6 3H33 E6 3L93 B5 3LL9 B4 3Q57 D6 5C54 B2 6B06 A3 7U02 E9 9H06 D5
2B89 A3 2G25 E4 2J14 B4 2LS2 C5 2Q27 D7 2R78 D3 3A07 D3 3F61 C6 3H34 E7 3L94 B4 3LM0 C5 3Q59 D6 5C56 B3 6B07 A3 7U03 E9 9H07 D6
2B91 A4 2G30 E5 2J15 C4 2LS4 C5 2Q28 D6 2R79 D3 3A28 B4 3F62 B6 3H35 D7 3L95 B5 3LM1 C5 3Q61 D6 5E02 A9 6B08 A3 7U23 E8 9H08 D5
2B92 A4 2G31 E5 2J16 C4 2LS5 B4 2Q29 D7 2R80 E3 3A29 B4 3F63 B6 3H36 D7 3L96 B5 3LM2 C4 3Q63 D6 5E04 A9 6B09 A3 7V01 E7 9H09 D7
2B93 A4 2G32 E5 2J17 B4 2LS6 C5 2Q30 D6 2R81 D3 3A31 C2 3F66 C8 3H37 D7 3L97 B5 3LM3 C4 3R00 E3 5G00 E5 6B10 A3 7V02 E6 9H10 D7
2BA0 A3 2G33 E5 2J18 C4 2LS7 C5 2Q31 D7 2R82 D3 3A38 D3 3F67 C6 3H38 D7 3L98 B5 3LM4 C5 3R01 D3 5G01 E4 6B12 A4 9A55 D3 9H11 D7
2BA1 A3 2G34 E5 2J20 C4 2LS8 C4 2Q32 D7 2R83 E3 3A47 B3 3F68 C6 3H39 D7 3L99 B4 3LM5 C5 3R02 E4 5G02 E5 6B20 A3 9B11 A4 9H12 D7
2BA2 A3 2G35 E5 2J22 B4 2LS9 C4 2Q33 D7 2R84 D3 3A48 B3 3F72 B6 3H40 E7 3LA0 B4 3LM6 C5 3R03 E4 5G03 E4 6B21 A3 9B17 A4 9H13 D7
2BA3 A3 2G36 E5 2J23 B4 2LT0 C4 2Q34 D6 2R86 E3 3B09 A3 3F73 B6 3H41 E7 3LA1 B5 3LM7 C5 3R04 E4 5G10 E4 6B22 A3 9B18 A3 9H15 D7
2BB2 A4 2G37 E5 2J24 B4 2LT1 C5 2Q35 D7 2R87 E3 3B10 A3 3F74 B6 3H42 E7 3LA2 B5 3LM8 C5 3R05 D4 5G11 F5 6B23 A3 9B21 A4 9H16 D7
2C01 C4 2G38 E5 2J25 B4 2LT2 C5 2Q37 D6 2R88 E3 3B11 A3 3F75 B6 3H44 C8 3LA3 B5 3LM9 C5 3R06 D4 5G12 F5 6C53 B2 9B22 A4 9H18 D7
2C24 B2 2G39 E5 2J26 B4 2LT3 C5 2Q38 D6 2R89 D3 3B15 A4 3F76 C7 3H50 D5 3LA4 B5 3LN2 B5 3R07 D4 5G13 E5 6F01 C8 9C01 D3 9H19 D7
2C33 D3 2G42 F5 2J27 C4 2LT4 C5 2Q39 D6 2R90 E3 3B16 A3 3F77 C7 3H65 E7 3LA5 B5 3LN3 B4 3R08 D4 5G14 F5 6F02 C8 9C03 D2 9H20 D7
2C34 D3 2G50 E5 2J28 C4 2LT5 C5 2Q40 D7 2R91 E3 3B17 A3 3F78 C7 3H67 D7 3LA6 B5 3LN5 C5 3R09 D4 5G15 F5 6GA3 F4 9C23 C3 9H22 D7
2C37 D3 2G51 E5 2K49 B3 2LT6 C5 2Q41 E6 2R92 E3 3B18 A3 3F79 C7 3H69 D5 3LA7 B5 3LN6 C5 3R10 E4 5G16 E5 6H01 D7 9C55 B3 9H23 D7
2C38 D3 2G52 E5 2K51 B3 2LT7 C5 2Q42 D6 2R93 E3 3B19 A3 3F80 C7 3H70 D6 3LA8 B5 3LN7 C5 3R11 E4 5G66 F4 6H03 D7 9E10 B9 9H24 D7
2C39 C2 2G53 E5 2K53 B3 2LT8 C5 2Q44 E6 2R94 D3 3B20 A3 3F81 C7 3H71 D6 3LA9 B5 3LP0 C5 3R12 E4 5G67 F3 6H04 E5 9E11 B9 9H25 D7
2C42 C4 2G54 E4 2K56 B3 2LT9 C5 2Q45 E6 2R95 E3 3B21 A3 3F82 C6 3H72 D6 3LB1 B4 3LP1 C5 3R13 D4 5G69 F3 6I02 A6 9E12 B9 9H26 D7
2C45 C3 2G55 F4 2K57 B3 2LU0 C5 2Q46 E7 2R96 E4 3B22 A3 3F85 C7 3H73 E7 3LB2 B5 3LP4 C5 3R14 E4 5G70 F3 6I03 A6 9E13 B9 9H27 D7

Personal Notes:

E_06532_012.eps
131004

Layout SSB (v2) (Part 1 Top Side)

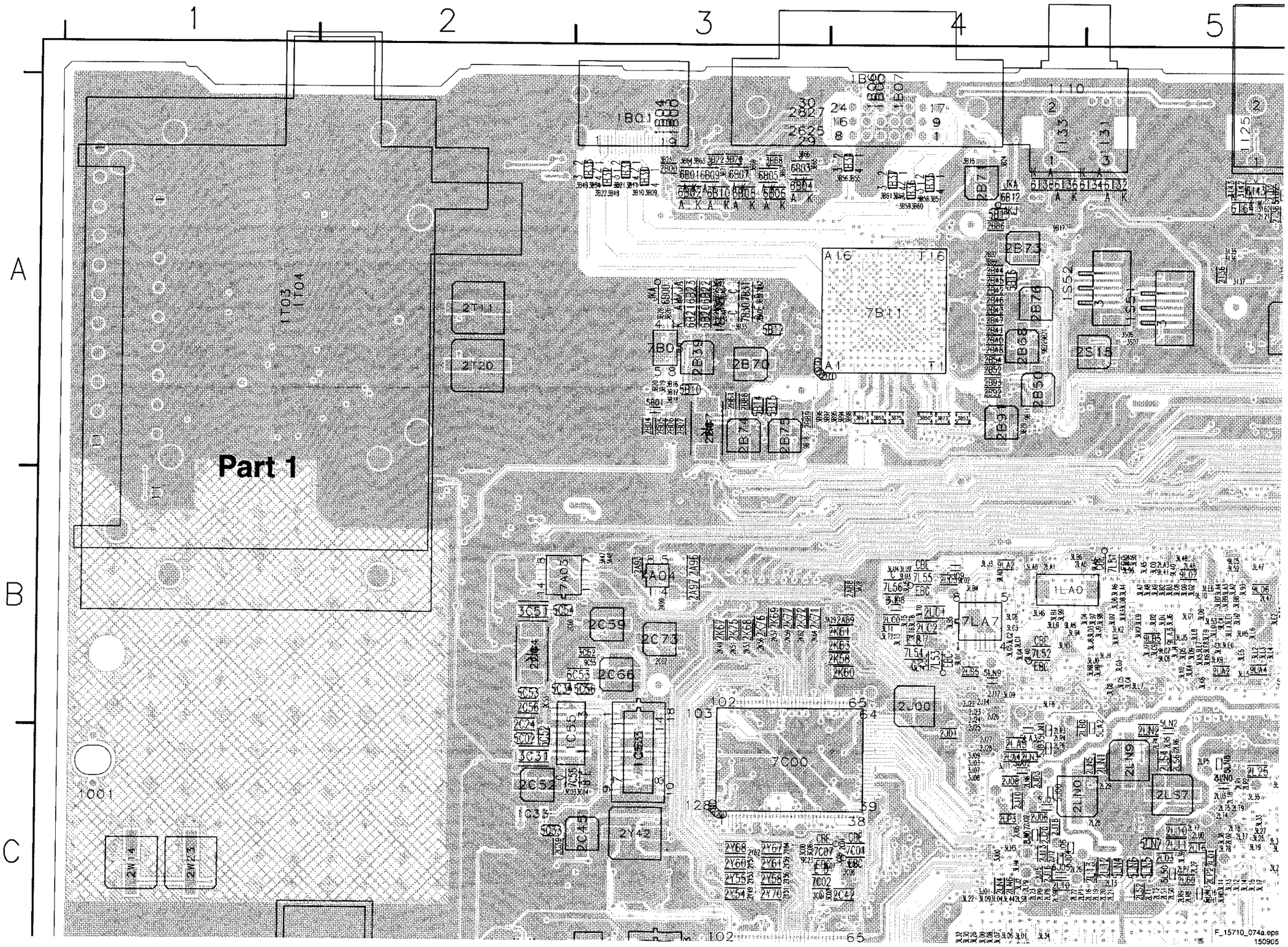

Layout SSB (v2) (Part 2 Top Side)

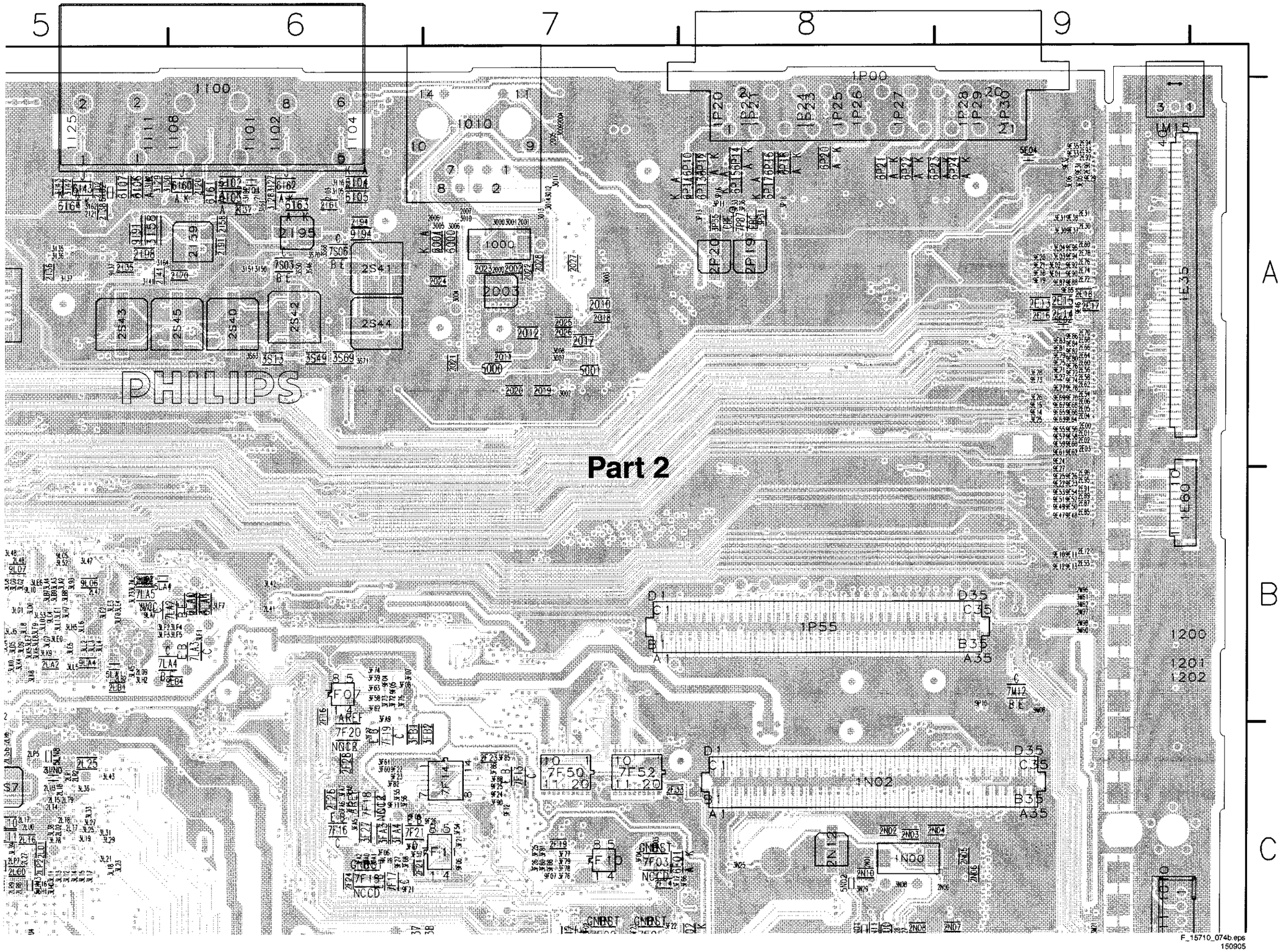

Layout SSB (v2) (Part 3 Top Side)

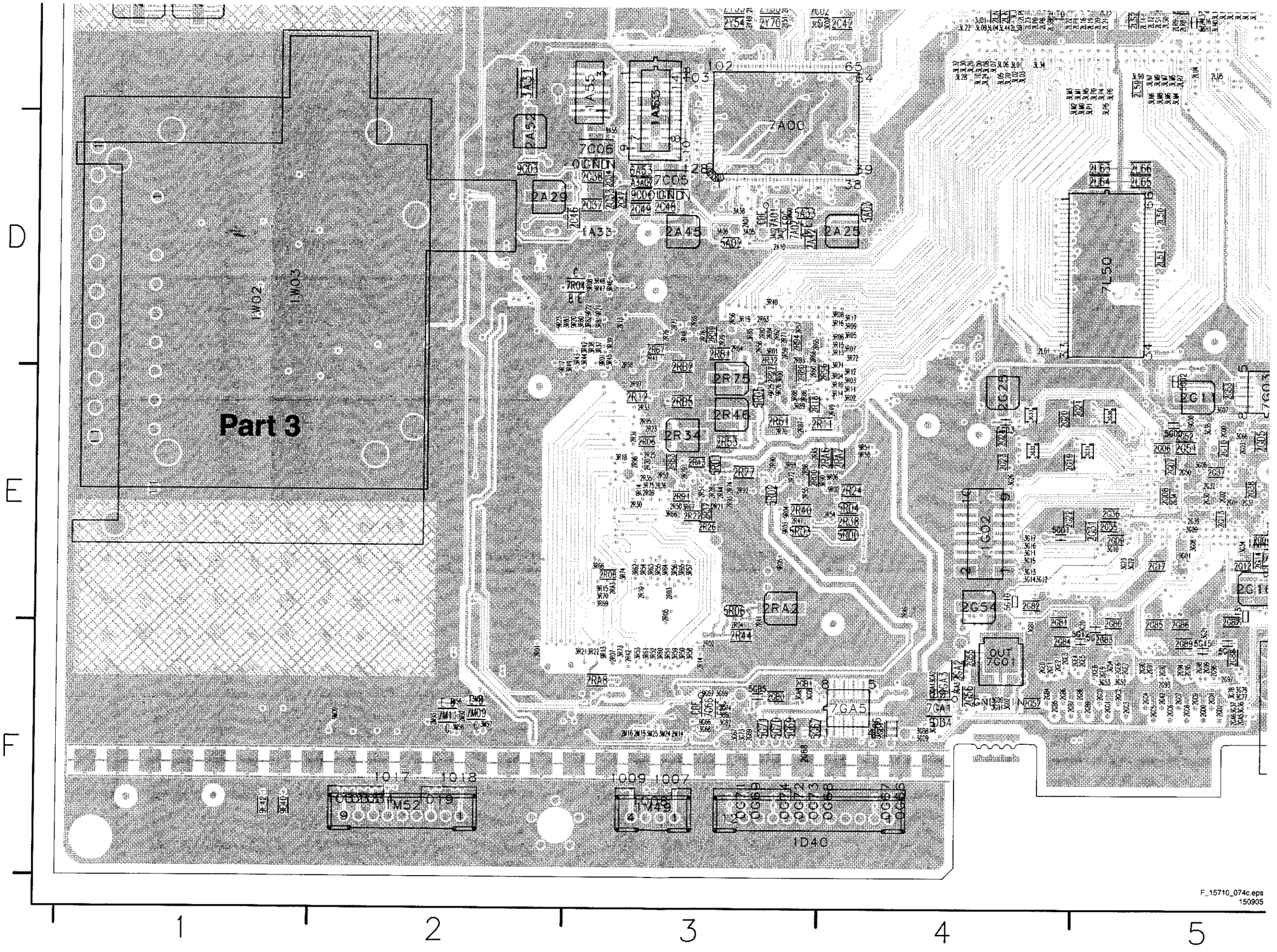

Layout SSB (v2) (Part 4 Top Side)

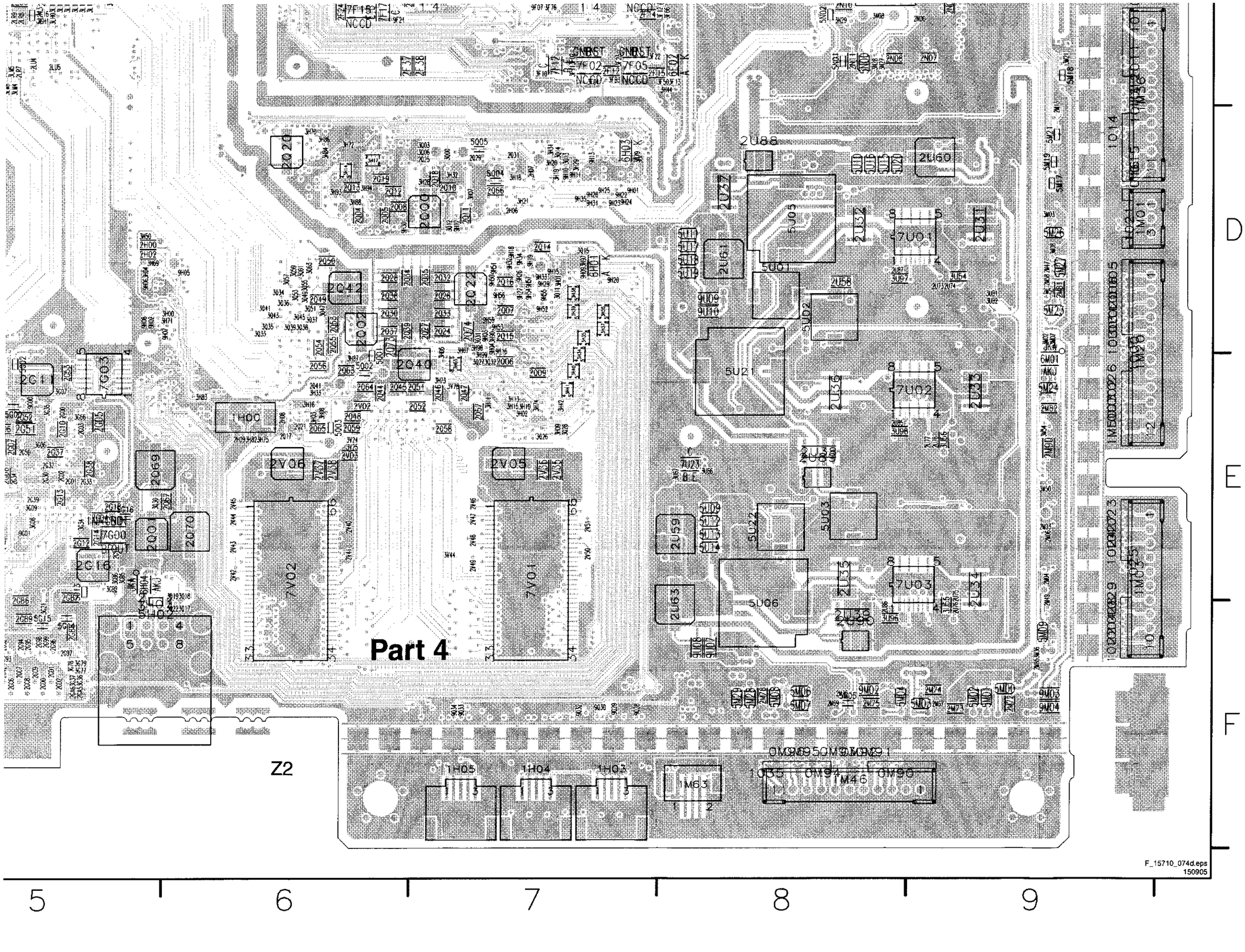

Layout SSB (v2) (Overview Bottom Side)

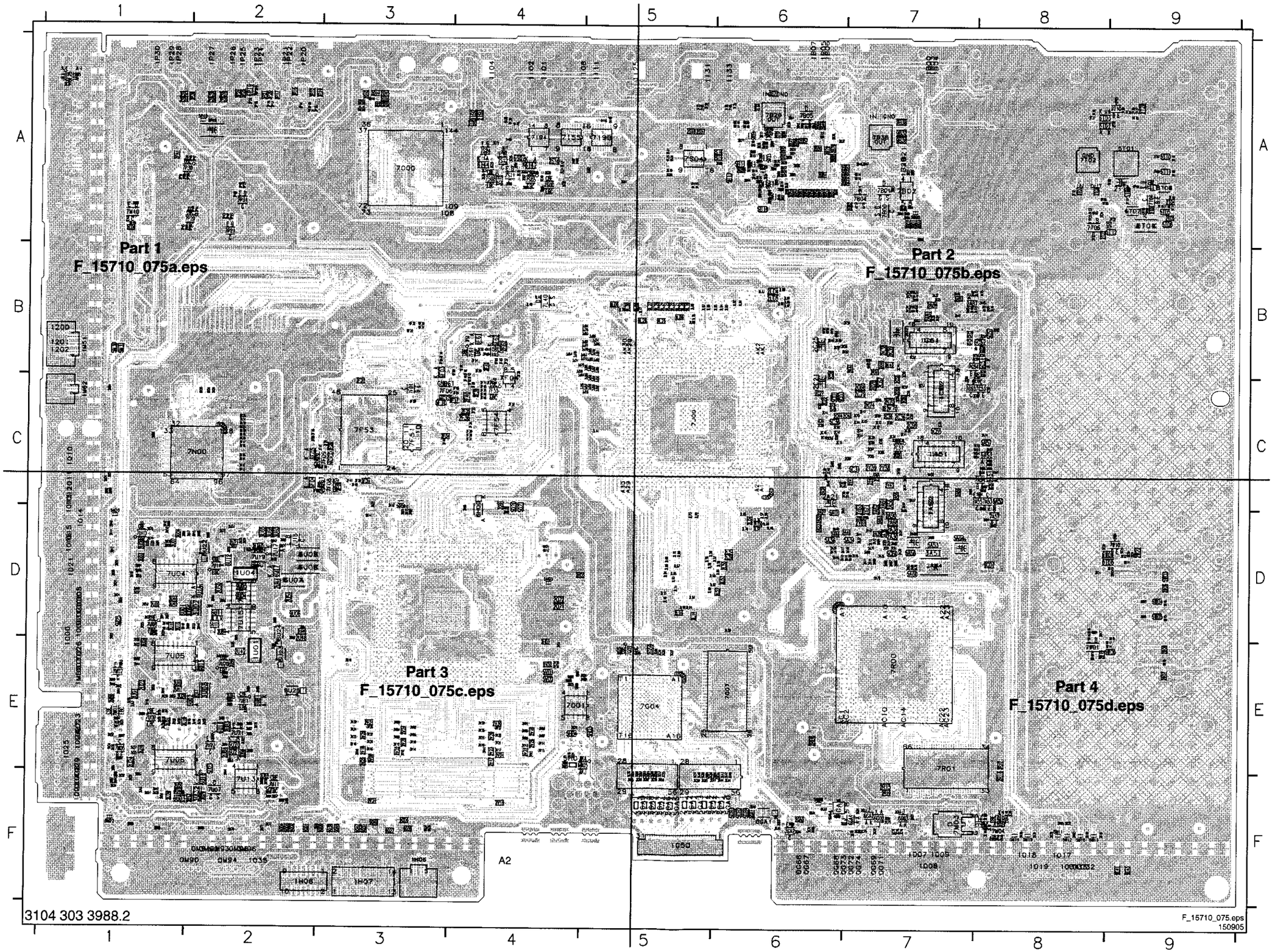

Mapping SSB (v2) (Bottom Side)

1A51 C7 1A52 C7 1A61 C7 1A62 D7 1C51 B7 1C52 B7 1C61 B7 1C62 C7 1G50 F5 1H06 F3 1H07 F3 1H08 F2 1M51 B1 1M62 C1 1U01 E2 1U04 D2 2A02 D7 2A03 C6 2A04 D7 2A05 C6 2A06 D7 2A07 D7 2A08 D7 2A09 D7 2A11 D7 2A12 D7 2A13 D7 2A14 D7 2A15 D7 2A16 D7 2A17 D6 2A18 D6 2A19 D6 2A20 D6 2A21 C6 2A22 D6 2A23 D6 2A24 D7 2A26 D7 2A27 D6 2A28 C6 2A30 D7 2A31 D7 2A32 D7 2A33 D7 2A35 D7 2A36 D7 2A39 D7 2A40 D7 2A41 D7 2A44 D6 2A50 C7 2A53 C8 2A54 C8 2A55 C7 2A56 C7 2A57 C7 2A59 D7 2A60 D7 2A61 C7 2A63 D7 2A64 D7 2A65 D7 2A66 D7 2A67 C7 2A68 D7 2A69 C7 2A70 C8 2A71 C8 2A74 C7 2A75 D7 2A76 D7 2A77 D7 2A81 B7 2A82 B7 2A84 B7 2A85 B7 2A87 B7 2A90 D7 2A91 B8 2A92 B7 2A98 B7 2B01 A7 2B02 A7 2B03 A7 2B10 A6 2B11 A6 2B12 A6 2B13 A6 2B14 A6 2B15 A6 2B16 A6 2B17 A6 2B18 A6 2B20 A6 2B21 A6 2B22 A6 2B23 A6 2B24 A6 2B25 A6 2B26 A6 2B27 A6 2B28 A6 2B29 A6 2B30 A6 2B34 A6 2B35 A6 2B36 A6 2B37 A6 2B38 A7 2B49 A6 2B51 A6 2B53 A6 2B55 A6

2B56 A6 2B57 A6 2B58 A6 2B59 A6 2B60 A6 2B62 A6 2B63 A6 2B64 A6 2B66 A6 2B69 A6 2B72 A6 2B77 A6 2B78 A6 2B79 A6 2B80 A6 2B81 A6 2B82 A7 2B83 A6 2B85 A6 2B87 A6 2B90 A6 2B94 A6 2B80 A6 2B91 A6 2B84 A6 2B93 A6 2B98 A6 2C02 C7 2C03 C7 2C04 C7 2C05 C7 2C06 C7 2C07 C7 2C08 C7 2C09 C7 2C10 C7 2C11 C7 2C12 C7 2C13 C7 2C14 C7 2C15 C6 2C16 C6 2C17 C6 2C18 C6 2C19 C6 2C20 C6 2C21 C6 2C22 C6 2C23 C6 2C25 B6 2C27 C6 2C28 B6 2C29 C7 2C30 C7 2C31 C7 2C35 C7 2C36 C7 2C40 C7 2C41 C7 2C44 C6 2C50 B7 2C55 C7 2C57 C7 2C63 C7 2C65 C7 2C68 C7 2C69 C7 2C70 B7 2C72 C7 2C74 B7 2C78 C7 2C79 C7 2C80 C7 2C81 D7 2C82 B8 2C83 C6 2C99 C7 2D01 A7 2D02 A7 2D03 A7 2D10 A6 2D11 A6 2D12 A6 2D13 A6 2D14 A6 2D15 A6 2D16 A6 2D17 A6 2D18 A6 2D20 A6 2D21 A6 2D22 A6 2D23 A6 2D24 A6 2D25 A6 2D26 A6 2D27 A6 2D28 A6 2D29 A6 2D30 A6 2D31 A6 2D32 A6 2D33 A6 2D34 A6 2D35 A6 2D36 A6 2D37 A6 2D38 A7 2D49 A6 2D51 A6 2D53 A6 2D55 A6

2D06 D2 2D07 D1 2D08 D1 2D09 E1 2D10 D1 2D11 E2 2D12 D1 2D13 D1 2D14 D2 2D15 D1 2D16 E2 2D17 F2 2D18 E1 2D19 E1 2D20 E1 2D21 E1 2D22 D1 2D23 E1 2D24 E1 2D25 D1 2D26 E1 2D27 E1 2D28 F1 2D29 E2 2D30 E1 2D40 D2 2D41 D2 2D42 D2 2D43 F1 2D44 E1 2D45 D1 2D46 E2 2D47 D2 2D48 E2 2D49 D2 2D50 D2 2D51 D2 2D52 D1 2D53 E1 2D54 F1 2D55 D1 2D56 E1 2D57 F1 2D62 F2 2D71 D2 2D72 D2 2D79 E2 2D80 E2 2D82 E2 2D84 E2 2D91 E1 2D92 D2 2D98 D9 2D99 D9 2E01 A1 2E02 A1 2E03 A1 2E04 A1 2E05 A1 2E06 A1 2E07 A1 2E08 A1 2E09 A1 2E10 A1 2E11 A1 2E12 A1 2E13 A1 2E14 F8 2E15 F8 2E16 F8 2E17 E8 2E18 E8 2E19 F8 2E20 F8 2E21 A1 2E22 A1 2E23 A1 2E24 A1 2E25 A1 2E26 A1 2E27 A1 2E28 A1 2E29 A1 2E30 A1 2E31 A1 2E32 A1 2E33 A1 2E34 A1 2E35 A1 2E36 A1 2E37 A1 2E38 A1 2E39 A1 2E40 A1 2E41 A1 2E42 B7 2E43 A1 2E44 A1 2E45 A1 2E46 A1 2E47 C7 2E48 B6 2E49 E6 2E50 B6 2E51 E6 2E52 B6 2E53 D6 2E54 D6 2E55 D5 2E56 D6 2E57 D6 2E58 D6 2E59 A6 2E60 A6 2E61 B7 2E62 B7 2E63 B7 2E64 A6 2E65 B7 2E66 B7 2E67 B7 2E68 B7 2E69 B7 2E70 B7 2E71 B7 2E72 B7 2E73 B7 2E74 B7 2E75 B7 2E76 B7 2E77 A6 2E78 A6 2E79 A6 2E80 A6 2E81 A6 2E82 A7 2E83 A6 2E84 A6 2E85 A6 2E86 A6 2E87 A6 2E88 A6 2E89 A6 2E90 A6 2E91 A6 2E92 A4 2E93 A4 2E94 A6 2E95 A6 2E96 A6 2E97 A6 2E98 A6 2E99 A6 2F01 A6 2F02 A6 2F03 A6 2F04 A6 2F05 A6 2F06 A6 2F07 A6 2F08 A6 2F09 A6 2F10 A6 2F11 A6 2F12 A6 2F13 A6 2F14 A6 2F15 A6 2F16 A6 2F17 A6 2F18 A6 2F19 A6 2F20 A6 2F21 A6 2F22 A6 2F23 A6 2F24 A6 2F25 A6 2F26 A6 2F27 A6 2F28 A6 2F29 A6 2F30 A6 2F31 A6 2F32 A6 2F33 A6 2F34 A6 2F35 A6 2F36 A6 2F37 A6 2F38 A6 2F39 A6 2F40 A6 2F41 A6 2F42 A6 2F43 A6 2F44 A6 2F45 A6 2F46 A6 2F47 A6 2F48 A6 2F49 A6 2F50 A6 2F51 A6 2F52 A6 2F53 A6 2F54 A6 2F55 A6 2F56 A6 2F57 A6 2F58 A6 2F59 A6 2F60 A6 2F61 A6 2F62 A6 2F63 A6 2F64 A6 2F65 A6 2F66 A6 2F67 A6 2F68 A6 2F69 A6 2F70 A6 2F71 A6 2F72 A6 2F73 A6 2F74 A6 2F75 A6 2F76 A6 2F77 A6 2F78 A6 2F79 A6 2F80 A6 2F81 A6 2F82 A6 2F83 A6 2F84 A6 2F85 A6 2F86 A6 2F87 A6 2F88 A6 2F89 A6 2F90 A6 2F91 A6 2F92 A6 2F93 A6 2F94 A6 2F95 A6 2F96 A6 2F97 A6 2F98 A6 2F99 A6 2G01 A6 2G02 A6 2G03 A6 2G04 A6 2G05 A6 2G06 A6 2G07 A6 2G08 A6 2G09 A6 2G10 A6 2G11 A6 2G12 A6 2G13 A6 2G14 A6 2G15 A6 2G16 A6 2G17 A6 2G18 A6 2G19 A6 2G20 A6 2G21 A6 2G22 A6 2G23 A6 2G24 A6 2G25 A6 2G26 A6 2G27 A6 2G28 A6 2G29 A6 2G30 A6 2G31 A6 2G32 A6 2G33 A6 2G34 A6 2G35 A6 2G36 A6 2G37 A6 2G38 A6 2G39 A6 2G40 A6 2G41 A6 2G42 A6 2G43 A6 2G44 A6 2G45 A6 2G46 A6 2G47 A6 2G48 A6 2G49 A6 2G50 A6 2G51 A6 2G52 A6 2G53 A6 2G54 A6 2G55 A6 2G56 A6 2G57 A6 2G58 A6 2G59 A6 2G60 A6 2G61 A6 2G62 A6 2G63 A6 2G64 A6 2G65 A6 2G66 A6 2G67 A6 2G68 A6 2G69 A6 2G70 A6 2G71 A6 2G72 A6 2G73 A6 2G74 A6 2G75 A6 2G76 A6 2G77 A6 2G78 A6 2G79 A6 2G80 A6 2G81 A6 2G82 A6 2G83 A6 2G84 A6 2G85 A6 2G86 A6 2G87 A6 2G88 A6 2G89 A6 2G90 A6 2G91 A6 2G92 A6 2G93 A6 2G94 A6 2G95 A6 2G96 A6 2G97 A6 2G98 A6 2G99 A6 2H01 E4 2H03 D4 2H12 C3 2H13 D3

2I05 A5 2I06 A6 2I92 A4 2I93 A4 2K38 B7 2K39 B7 2K40 B7 2K41 B7 2K42 B7 2K43 B7 2K45 B7 2K46 B6 2K47 C7 2K48 B6 2K50 B6 2K52 B6 2K54 B7 2K55 B6 2K65 C7 2K66 C7 2K70 C7 2K73 C7 2K74 C7 2L00 D6 2L04 D6 2L05 D6 2L14 D5 2L15 D5 2L52 D6 2L53 D6 2L54 D6 2L55 D5 2L56 D6 2L57 D6 2L58 D6 2L04 B6 2L05 B6 2M00 C1 2M01 C1 2M02 C1 2M05 E1 2M07 F1 2M08 F1 2M10 D1 2M11 D1 2M12 D1 2M18 F8 2M19 F8 2M20 D1 2M21 D1 2M22 F8 2M29 F8 2M30 F8 2M31 F8 2M50 D1 2M62 F8 2M65 F1 2M66 F1 2M68 F2 2M70 F2 2M71 F2 2M77 F2 2M80 E1 2M83 E1 2M94 C1 2M95 F8 2O13 A3 2O14 A3 2O15 A3 2O16 A3 2P10 A2 2P13 A2 2P14 A2 2P17 A2 2P18 A2 2P40 A2 2P41 A1 2Q71 D4 2Q72 D4 2Q91 C4 2Q92 D4 2Q93 D4 2R15 F7 2R16 F8 2R17 E8 2R19 F7 2RB6 E6 2S10 A4 2S16 A6 2S17 A5 2S18 A5 2S19 A6 2T01 A9 2T02 A9 2T03 A8 2T04 A9 2T05 A9 2T06 A8 2T10 A9 2T12 A8 2T13 A9 2T18 A8 2T21 A9 2T22 A8 2T23 A8 2T25 A9 2T26 A9 2T27 A9 2T28 A9 2U01 D1 2U02 D1 2U03 D1 2U04 D1 2U05 D2

2U00 D2 2U08 D1 2U09 E1 2U10 D1 2U11 E2 2U12 D1 2U13 D1 2U14 D2 2U15 D1 2U16 E2 2U17 F2 2U18 E1 2U19 E1 2U20 E1 2U21 E1 2U22 D1 2U23 E1 2U24 E1 2U25 D1 2U26 E1 2U27 E1 2U28 F1 2U30 E1 2U40 D2 2U41 D2 2U42 D2 2U43 F1 2U44 E1 2U45 D1 2U46 E2 2U47 D2 2U48 E2 2U49 D2 2U50 D2 2U51 D2 2U52 D1 2U53 E1 2U54 F1 2U55 D1 2U56 E1 2U57 F1 2U62 F2 2U71 D2 2U72 D2 2U79 E2 2U80 E2 2U82 E2 2U84 E2 2U91 E1 2U92 D2 2UB1 E2 2V00 E3 2V01 E4 2V16 E4 2V17 E4 2V18 E3 2V19 F4 2V20 E4 2V21 F3 2V22 E3 2V23 E4 2V24 E3 2V25 E3 2V26 E4 2V27 E4 2V28 E3 2V29 E3 2V30 E4 2V31 E3 2V32 E4 2V33 E4 2V34 E4 2V38 C7 2V41 C7 2V42 C7 2V43 C7 2V44 C7 2V45 C7 2V46 C7 2V47 D7 2V48 C6 2V50 C6 2V52 C6 2V57 D7 2V65 D7 2V66 D7 2V69 D7 2V71 D7 2W00 D9 2W02 D9 2W03 D9 2W05 D9 2W06 D9 2W07 E9 2W08 E9 2W09 E8 2W15 D9 2W17 D9 2W18 D9 2W18 E8 2W19 E8 2W20 D9 2W21 D9 2W22 D9 2W24 D9

3A20 B7 3A21 B7 3A22 B7 3A23 B7 3A24 B7 3A25 B7 3A26 B7 3A27 B7 3A39 C6 3A40 C6 3A41 D6 3A42 B7 3A43 C7 3A44 C7 3A45 B8 3A46 B7 3A50 C8 3A51 D7 3A53 D7 3A56 C8 3A57 C8 3A58 C8 3A59 C8 3A60 C7 3A61 C8 3A63 C7 3A65 C8 3A66 C8 3A67 C8 3A80 D7 3A81 D7 3A83 D7 3B00 A6 3B01 A6 3B02 A7 3B03 A7 3B04 A7 3B05 A7 3B06 A7 3B07 A7 3B08 A7 3B12 A6 3B13 A6 3B14 A7 3B25 A7 3B27 A7 3B30 A6 3B32 A6 3B34 A6 3B35 A6 3B36 A6 3B37 A6 3B38 A6 3B39 A6 3B40 A6 3B41 A6 3B42 A6 3B44 A6 3B45 A6 3B46 A7 3B47 A7 3B74 A6 3B76 A6 3B77 A6 3B78 A6 3B79 A6 3B80 A6 3B83 A6 3B84 A6 3B85 A6 3B86 A6 3B87 A6 3B88 A6 3C30 C7 3C32 C7 3C33 C6 3C34 C7 3C38 C6 3C39 C6 3C40 C6 3C41 C6 3C43 C7 3C45 C7 3C50 B8 3C53 C7 3C56 B8 3C57 B8 3C58 B8 3C59 B7 3C60 C7 3C61 C7 3C63 B7 3C65 B8 3C66 B8 3C67 B7 3C80 C6 3C81 D7 3C83 D7 3E07 A1 3E08 A1 3E12 A1 3E13 A1 3E14 F8 3E15 F8 3E16 F8 3E17 F8 3E18 F8 3E19 F8 3E20 F8 3F05 C4 3F09 C2 3F14 B3 3F15 C3

3F16 C2 3F17 C3 3F18 B4 3F19 C4 3F20 C3 3F24 C3 3F28 C4 3F29 B4 3F30 C4 3F31 C4 3F32 C4 3F33 C4 3F34 C4 3F35 C4 3F36 B4 3F37 B4 3F38 C4 3F39 C3 3F40 C3 3F41 C4 3F42 C4 3F43 B4 3F44 C3 3F45 C4 3F46 C4 3F47 C4 3F48 C4 3F49 B4 3F51 B4 3F52 B4 3F53 B4 3F64 C4 3F65 C2 3F70 C4 3F71 C4 3FB4 B3 3FB5 C2 3FB6 C2 3G03 E5 3G04 E5 3G05 E5 3G24 E5 3G25 E5 3G27 E5 3G28 F7 3G40 F6 3G41 F6 3G42 F6 3G43 F6 3G44 F6 3G45 F6 3G46 F6 3G47 F6 3G48 F5 3G49 F5 3G50 F5 3G51 F5 3G55 F5 3G56 F5 3G57 F5 3G58 F5 3G59 F5 3G60 F5 3G61 F5 3G62 F5 3G63 F5 3G64 F5 3G65 F5 3G80 C4 3G81 F7 3G83 F7 3G84 F5 3G85 F5 3G86 F5 3G87 F5 3G88 F5 3G89 F5 3GA0 F6 3GA4 F6 3GA5 F6 3GB3 F6 3GC0 F7 3GC1 F7 3H12 D3 3H22 C3 3H51 E4 3H89 E5 3H92 D3 3H95 D4 3I22 A5 3I23 A5 3I25 A6 3I26 A6 3I60 A4 3I67 A4 3I68 A4

3J65 B5 3J66 B5 3J67 B5 3J68 B5 3J69 B5 3J70 B4 3J71 B4 3J72 B4 3J73 B5 3J74 B5 3J75 B5 3J76 B5 3J77 B5 3J78 B5 3J79 B5 3J80 B5 3J81 B5 3J82 B5 3J83 B5 3J84 B5 3J85 B5 3L36 D6 3L37 D6 3L40 B4 3L41 C5 3L46 D5 3L50 D5 3L51 D5 3L56 D5 3L57 D6 3L58 D5 3L59 D6 3L60 D5 3L61 D6 3L62 D5 3L63 D5 3L64 D5 3L65 D5 3L66 D5 3L67 D5 3L68 D5 3L69 D5 3L70 D5 3L71 D5 3L75 B5 3L76 B5 3L77 B5 3L79 D6 3L80 B5 3L81 B6 3L82 B6 3L83 B6 3L84 B6 3L85 B6 3L86 B5 3L87 B5 3L88 B5 3L89 D5 3L91 D5 3L92 D5 3LP2 D5 3LP3 D5 3LS6 D6 3LS7 D6 3LU0 B6 3LU1 B6 3LU6 B6 3LU7 B6 3LU8 B6 3M01 D1 3M04 F1 3M05 D1 3M20 C1 3M27 F7 3M30 E1 3M31 E1 3M32 F1 3M34 F1 3M35 E1 3M38 E1 3M40 E1 3M41 E1 3M42 E1 3M43 E1 3M44 F1 3M46 E1 3M47 E1 3M49 A2 3M51 A1 3M92 D3 3N09 C1 3N12 C2 3N13 C2 3N14 C2 3N15 C2 3N16 C2 3N17 C2 3N18 C2 3N19 C2 3N24 C2 3N30 C2 3N31 C2 3N32 C2 3O21 A3 3O22 A3 3O23 A3 3O24 A3 3O25 A3 3O26 A3 3O27 A3 3O28 A3 3P10 A2 3P12 A2 3P14 A2 3P15 A2 3P17 A2

3P19 A2 3P20 A2 3P21 A2 3P22 A2 3P23 A2 3P24 A2 3P25 A2 3P26 A2 3P27 A2 3P28 A2 3P29 A2 3P30 A1 3P32 A1 3P34 A1 3P40 A2 3P41 A2 3P42 A2 3P43 A2 3P44 A1 3P45 A1 3P46 A1 3P47 A2 3P48 A2 3P49 A2 3P50 A1 3P51 A1 3Q01 D3 3Q10 E3 3Q16 E4 3Q20 E4 3Q21 E4 3Q23 E4 3Q24 E5 3Q25 E4 3Q29 E4 3Q70 F3 3S08 A5 3S09 A6 3S10 A5 3S11 A5 3S12 A4 3S14 A4 3S15 A4 3S16 A4 3S17 A4 3S19 A4 3S20 A4 3S21 A4 3S22 A4 3S23 A4 3S24 A4 3S61 A5 3S62 A5 3S64 A4 3S65 A4 3S66 A4 3S67 A4 3S72 A4 3S73 A4 3S74 A4 3S75 A4 3S95 A4 3S96 A4 3T04 A9 3T06 A9 3T07 A9 3T09 A9 3T12 A8 3T16 A9 3T17 A9 3T18 A9 3T19 A9 3T21 A9 3T22 A9 3T23 A8 3T24 A8 3T25 A8 3T26 A8 3T27 A8 3T28 A9 3T29 A9 3U01 E2 3U02 E2 3U03 E2 3U04 E1 3U05 D1 3U06 D1 3U07 D2 3U08 E2 3U10 D1 3U11 D1 3U12 D1 3U13 D1 3U14 E2 3U15 E1 3U16 E1 3U17 D2 3U18 D1 3U19 E1 3U20 F1 3U21 D1 3U22 D1 3U23 D1 3U24 D1 3U25 D1 3U26 E1 3U27 D1 3U28 E1 3U29 D1 3U30 E1 3U31 E2 3U32 F2 3U33 D2

3U34 D2 3U35 D2 3U36 D2 3U37 D1 3U38 E1 3U39 F1 3U40 D1 3U41 E1 3U42 F1 3U43 D2 3U44 D2 3U45 D1 3U46 D1 3U47 E1 3U48 E1 3U49 F1 3U50 F1 3U51 D2 3U52 D2 3U53 D2 3U56 F2 3U58 F2 3U59 F2 3U60 F2 3U61 E2 3U62 D2 3U63 D2 3U64 D2 3U65 D2 3U66 D2 3U68 D2 3U69 E2 3U71 D2 3U72 D1 3U73 D1 3U74 D1 3U75 D1 3U76 D1 3U77 D1 3U78 E1 3U79 E1 3U80 E1 3U81 F2 3U82 F2 3U83 F2 3U84 D2 3U85 E2 3U86 E2 3U87 E2 3U88 E2 3U89 E2 3U90 E2 3U91 E2 3U95 E2 3UA0 E2 3UA1 D2 3UA2 E2 3UA3 E2 3UA4 F2 3UA5 E2 3UA6 D2 3UA7 E1 3UA8 D2 3UB3 E2 3UB4 E2 3UB5 E2 3UB6 E2 3UB7 E2 3V00 E3 3V01 E4 3V02 E3 3V03 E4 3V04 E3 3V05 E4 3V06 E3 3V07 E4 3V08 E3 3V09 E4 3V10 E3 3V11 E4 3V12 E3 3V13 E4 3V14 E3 3V15 E4 3V16 E3 3V17 E4 3V18 E3 3V23 E4 3V32 E3 3V33 E4 3V34 E3 3V35 E4 3V36 E3 3V37 E4 3V38 E3 3V39 E4 3V40 E3 3V41 E4 3V42 E3 3V43 E4 3W03 D9 3W05 D9 3W13 D9 3W14 E9 3W15 D9 3W16 D8 3W17 D8 3W18 D8 3W20 D8 3W21 D8

3W22 D9 3W23 D9 5A01 D6 5A34 D7 5A36 D6 5A52 C8 5A53 D7 5A54 D7 5A56 D7 5A57 C8 5A60 D7 5B00 A7 5B11 A6 5B17 A6 5B18 A6 5B20 A6 5B21 A6 5B22 A6 5B23 A6 5B24 A6 5B26 A6 5B27 A6 5B28 A6 5B39 A6 5C01 C6 5C03 C6 5C31 C7 5C36 C6 5C55 C7 5C57 B8 5C60 D7 5F10 C3 5GA0 F5 5GA1 F5 5GA2 F5 5GA3 F5 5GA4 F5 5GA5 F5 5GA6 F5 5GA7 F5 5GA8 F5 5GA9 F5 5GB2 F6 5GB3 F6 5GB4 F6 5GB6 F6 5H01 E4 5H03 E5 5H04 E4 5H05 D4 5M10 F8 5M11 F8 5M12 F8 5M13 F8 5M14 F8 5M15 F8 5M20 D1 5M22 F1 5M25 D1 5M30 B1 5M31 B1 5P40 A2 5Q06 C3 5Q20 C4 5Q21 C4 5T01 A9 5T04 A9 5T05 A9 5T06 A9 5T10 A9 5T11 A9 5T12 A9 5U23 F2 5V01 E4 5V02 E4 5W03 D9 5W04 D9 5W05 D9 5W06 E9 6A51 C8 6A52 C8 6C51 B7 6C52 B8 6E25 A1 6F03 B3 6F04 C2 6F05 C2 6F61 B4 6F62 B4 6G02 F7 6G03 F7 6GA1 F6 6GA2 F7 6GA4 F7 6H00 D4 6H05 E5 6I42 A4 6I44 A4 6P19 A2 6S02 A4 6T01 A9 6T02 A8 6T03 A8 6T05 D8 6T06 A9 6T07 A9 6U01 D1 6U02 E1 6U03 F1 6U05 D2 6U06 D2 6U07 D2 6U11 D2 6U12 D2

6U14 D2 6U15 E2 6U16 F2 6U17 D2 6U18 E2 6U19 E2 6U20 E2 6U21 E2 6U22 D2 6U23 E2 6U24 D2 6U25 E2 6UB1 E2 6W04 D9 7A53 C8 7A54 C7 7A55 C7 7A57 D8 7B00 A7 7B01 A7 7B02 A7 7B04 A7 7B05 A6 7B20 A6 7B38 A7 7C01 C7 7C53 C8 7C54 B7 7C55 C7 7F01 C3 7F04 C4 7F06 C3 7F08 C3 7F09 C3 7F51 C3 7F53 C3 7F54 C4 7F55 C4 7F60 B4 7F61 B4 7G02 E5 7G04 E5 7G05 E5 7G06 E5 7G07 E6 7GA2 F6 7GA4 F7 7L40 B4 7M01 E1 7M02 E1 7M03 F7 7M04 F8 7M05 F8 7M06 E1 7M10 A1 7N00 C2 7O00 A3 7P20 A2 7P21 A2 7P30 A2 7P31 A2 7Q01 E4 7R00 E7 7R01 E7 7S00 A4 7S04 A5 7S05 A4 7S08 A4 7S11 A4 7S12 A4 7S24 A4 7T02 A8 7T03 A9 7T04 A9 7T06 A8 7T10 A8 7U04 D1 7U05 E1 7U06 E1 7U02 F2 7U08 D1 7U09 E1 7U10 D1 7U11 F2 7U13 F2 7U14 D2 7U15 D2 7U16 D2 7U17 D2 7U18 D2 7U19 D2 7U20 E2 7U21 E2 7U22 E2 7UB1 E2 7V00 D3 7W01 E8 7W10 D8 9A10 D7 9A11 D7 9A12 D6 9A21 B7 9A22 B7 9A23 B7 9A40 D6 9A51 C8 9A52 C7 9A53 C8 9A54 C8 9A56 C8

9A57 C7 9A58 C8 9B00 A7 9B12 A6 9B13 A7 9B14 A7 9B15 A6 9B16 A6 9B19 A6 9B20 A6 9B32 A7 9B38 A7 9C02 C6 9C07 D8 9C51 B7 9C52 B7 9C53 B7 9C54 B7 9C56 B7 9C57 C7 9C58 B7 9C59 C8 9E41 F9 9E43 F9 9E45 A1 9F00 B4 9F01 B4 9F02 C4 9F03 B4 9F30 B3 9F31 B3 9F32 B3 9F33 B3 9GA1 F7 9GA3 F6 9GA4 F6 9GA5 F6 9GA6 F6 9H14 D3 9H17 D4 9H21 D4 9I20 A4 9I32 A5 9I33 A5 9I42 A4 9I45 A5 9I46 A5 9I89 A4 9I92 A4 9K01 B7 9L05 B5 9L19 B5 9L20 B5 9L21 B5 9L22 B5 9L23 B5 9L24 B5 9L25 B5 9L26 B5 9L27 B5 9L28 B5 9L29 B5 9L30 B5 9L42 B4 9LA1 B6 9LA8 D6 9LA9 D6 9LB6 B5 9M01 E1 9M07 E1 9N23 C2 9N24 C2 9N25 C2 9N28 C2 9O16 A3 9P21 A1 9P22 A1 9P23 A2 9P24 A1 9P25 A2 9P26 A1 9Q00 F3 9Q01 F2 9Q02 F2 9Q03 F2 9Q04 F2 9Q05 F3 9Q06 E4 9Q07 E4 9Q08 E4 9Q09 E4 9Q27 F3 9Q31 F3 9Q35 F3 9Q36 F3 9Q37 F3 9Q38 F3 9Q47 F3 9Q48 F3 9Q49 F3 9S34 A5 9S35 A5 9T01 A9 9T02 A8 9T05 A8 9T06 A8 9T07 A8 9T10 A9 9T11 A9 9U01 D1 9U02 E1 9U03 F1 9U04 D2 9U06 D2

9U06 D2 9W01 D8 9W10 E9 9W11 D9 9Y01 B6 9Y02 B6 9Y03 B6 9Y04 B6 9Y05 B7

Personal Notes:

E_06532_012.eps
131004

Layout SSB (v2) (Part 1 Bottom Side)

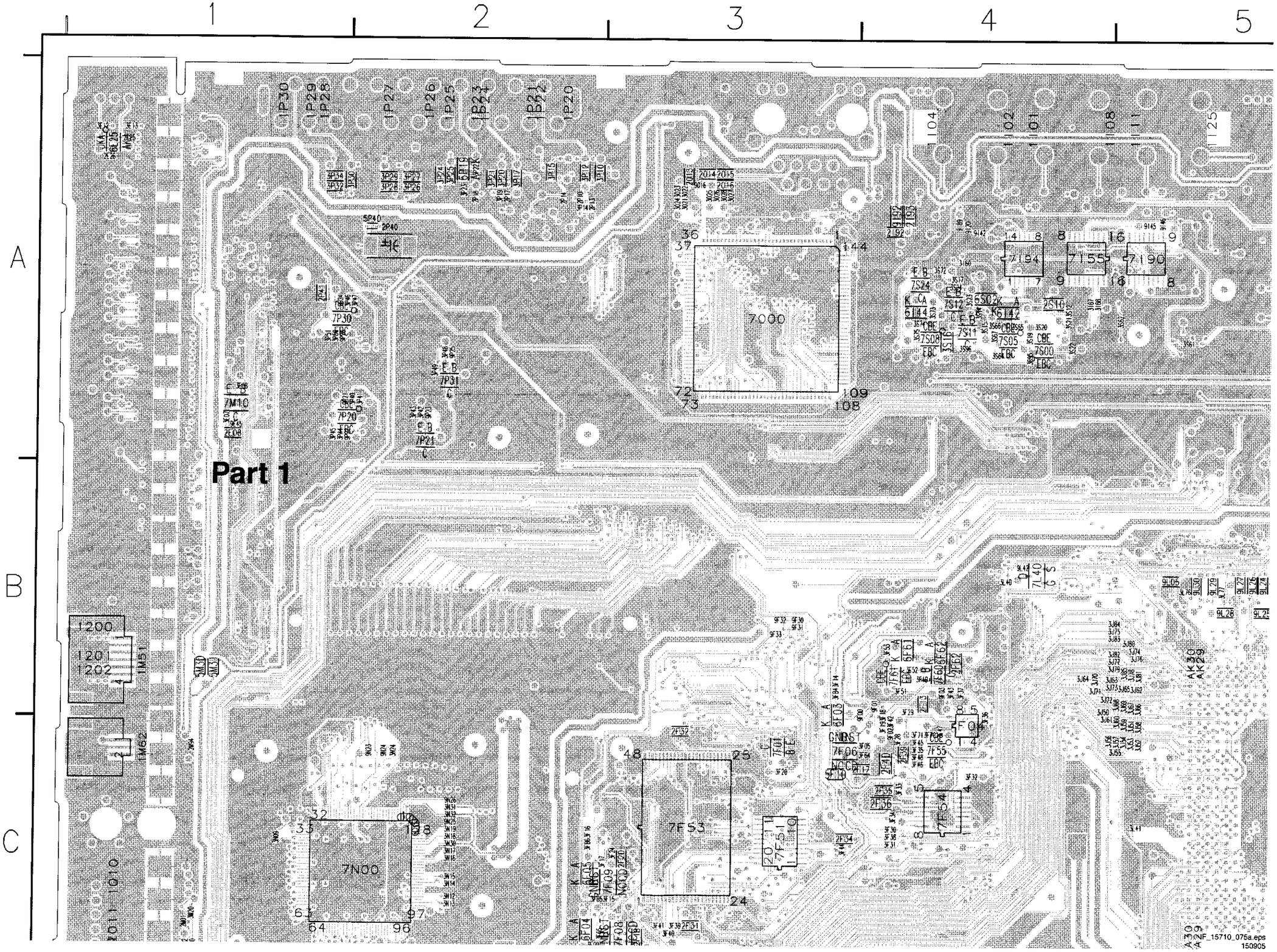

Layout SSB (v2) (Part 2 Bottom Side)

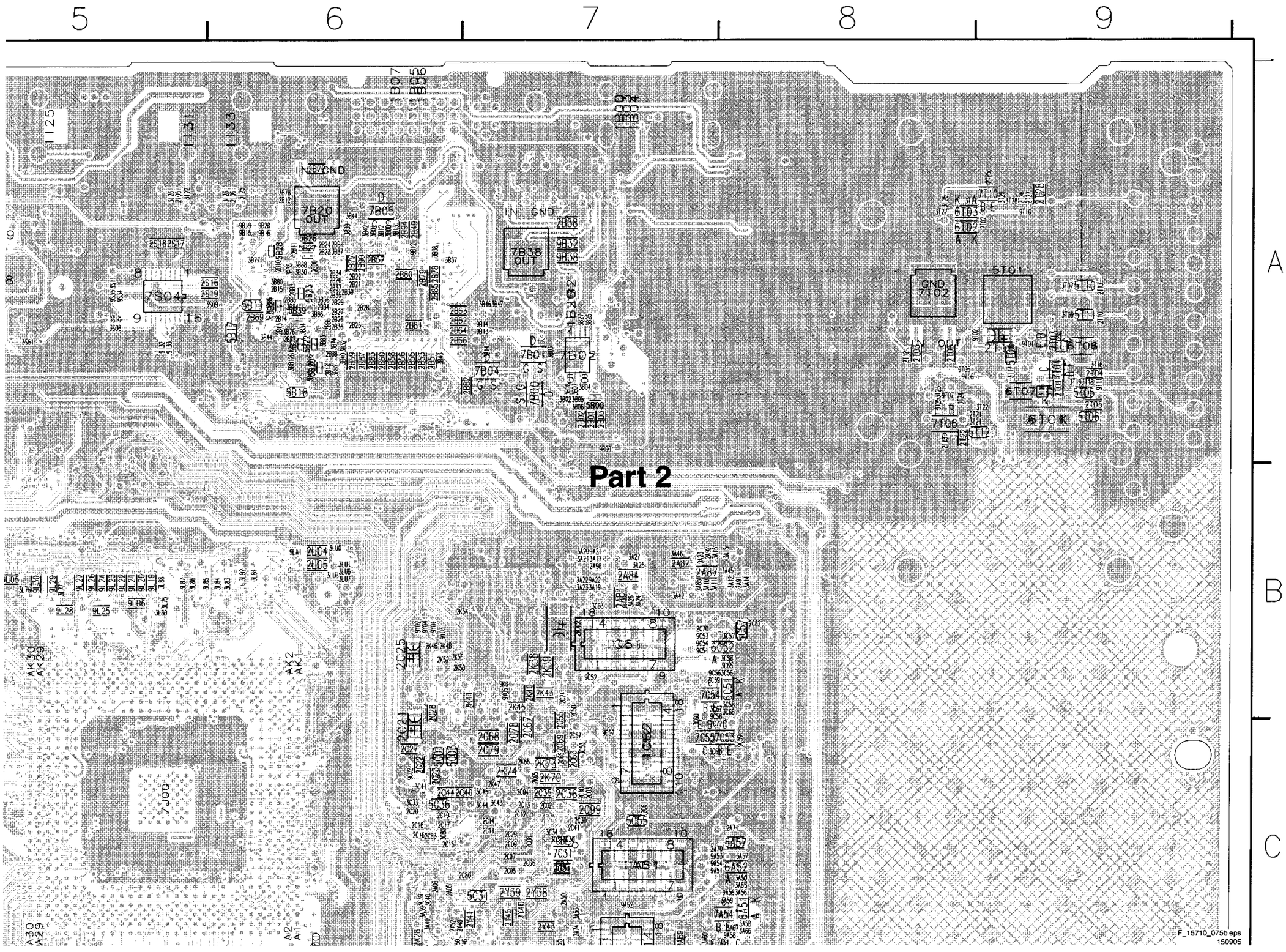

Layout SSB (v2) (Part 3 Bottom Side)

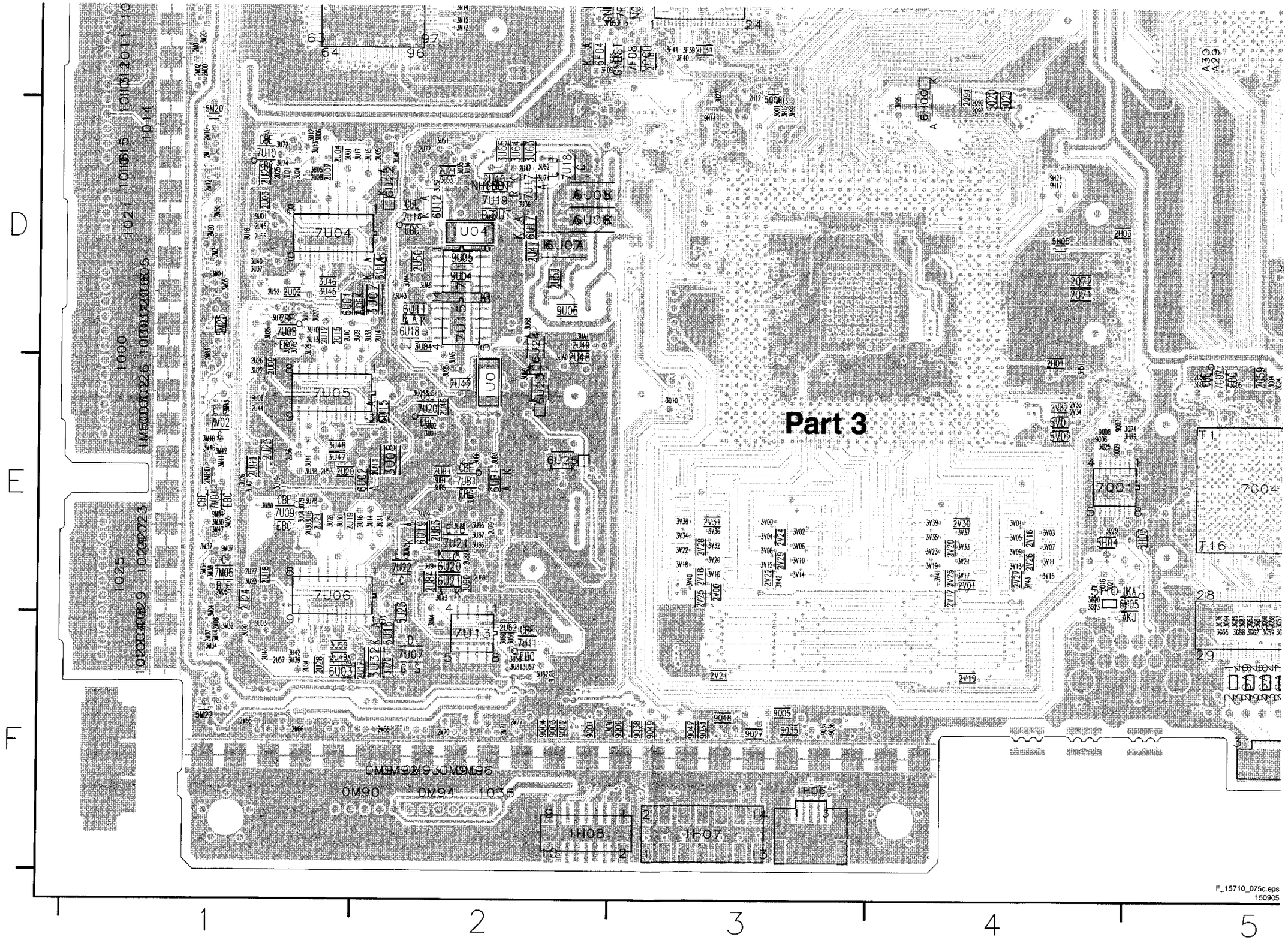

Layout SSB (v2) (Part 4 Bottom Side)

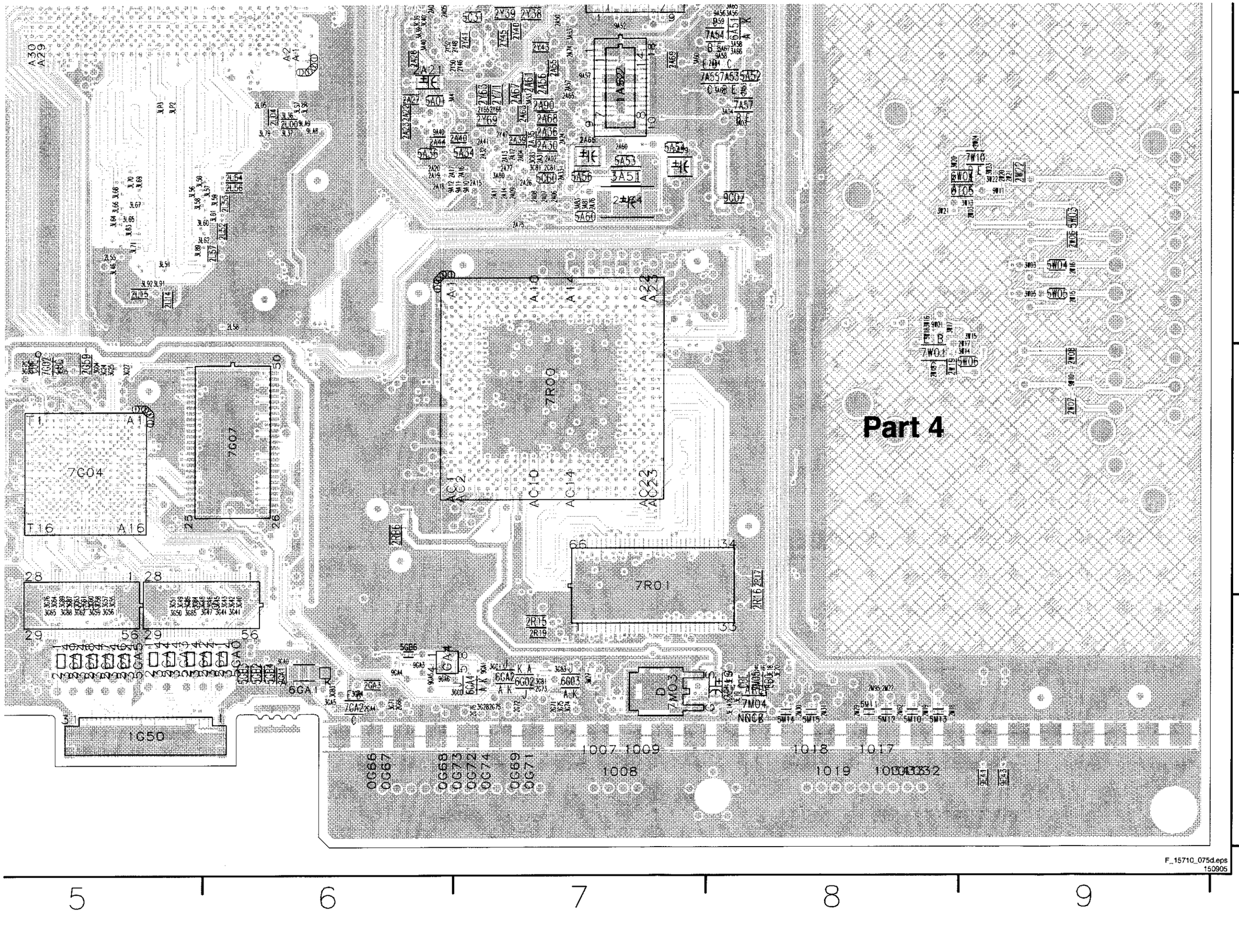

SSB (v3): DC / DC

1U01 A12	2U15 C5	2U31 C4	2U47 H9	2U63 B7	2U84 H14	3U07 C1	3U23 E10	3U39 D14	3U55 D14	3U71 H6	3U87 H11	3UA7 E10	5U01 B4	5U20 F5	6U17 G11	7U03-2 D13	7U14-2 B15	7UB1-2 H4	FU03 C15	FU19 F13	IU13 C7	IU29 E12	IU45 A6	IU61 A2	IU77 F8	IU93 F7	IUB1 H3
1U04 A12	2U16 C12	2U32 C4	2U48 F7	2U64 E6	2U85 D8	3U08 C5	3U24 G7	3U40 D4	3U56 D10	3U72 F3	3U88 H12	3UA8 H1	5U02 B8	5U21 D9	6U18 B12	7U04 C1	7U15 A14	9U01 F3	FU04 G8	FU20 F13	IU14 C10	IU30 E6	IU46 B12	IU62 A3	IU78 C11	IU94 G7	IUB2 H3
2U01 C2	2U17 B13	2U33 C8	2U49 G7	2U65 G6	2U86 D13	3U09 C7	3U25 F7	3U41 E8	3U57 A5	3U73 F4	3U89 G14	3UB1 G4	5U03 B12	5U22 G12	6U19 H13	7U05 C6	7U16 B13	9U02 F8	FU05 G13	FU21 H13	IU15 C11	IU31 E3	IU47 B12	IU63 B6	IU79 D10	IU95 A12	IUB3 H4
2U02 C3	2U18 C10	2U34 B13	2U50 A14	2U66 G6	2U87 D4	3U10 E8	3U26 F12	3U42 D14	3U58 A5	3U74 F4	3U90 H13	3UB2 G5	5U05 C4	5U23 E13	6U20 H13	7U06 C11	7U17 H8	9U03 F14	FU06 A5	FU22 A14	IU16 C11	IU32 E3	IU48 H9	IU64 B1	IU80 D10	IU96 D3	IUB4 H4
2U03 C1	2U19 C10	2U35 B13	2U51 E9	2U67 D4	2U88 D5	3U11 E9	3U27 E8	3U43 B14	3U59 A6	3U75 F8	3U91 H14	3UB3 G3	5U06 C14	6U01 C3	6U21 H13	7U07 E13	7U18 H9	9U04 A13	FU07 F13	FU23 A15	IU17 C8	IU33 B16	IU49 H8	IU65 C5	IU81 D14	IU97 D8	IUB5 H4
2U04 C1	2U20 C8	2U36 C8	2U52 D4	2U72 B10	2U89 D9	3U12 E4	3U28 E14	3U44 A14	3U60 A6	3U76 F8	3U95 B13	3UB4 G3	5U09 C15	6U02 C8	6U22 H1	7U08-1 D5	7U19 G10	9U05 A13	FU08 G13	IU02 B14	IU18 C12	IU34 B14	IU50 H8	IU66 B6	IU82 F13	IU98 D13	IUB7 E13
2U05 C1	2U21 E13	2U37 D4	2U53 D8	2U73 D5	2U90 E14	3U13 E4	3U29 E9	3U45 C3	3U61 A3	3U77 F8	3U96 D13	3UB5 G3	5U10 F5	6U03 B12	6U23 H1	7U08-2 F8	7U20-1 B1	9U06 G10	FU09 G13	IU03 C2	IU19 C10	IU35 B14	IU51 H9	IU67 C6	IU83 A15	IU99 A12	IUB8 E13
2U06 C9	2U22 C1	2U38 D9	2U54 D14	2U74 C5	2U91 E10	3U14 B12	3U30 E14	3U46 D3	3U62 H9	3U78 F15	3U97 D3	3UB6 H3	5U11 F9	6U05 F9	6U24 H2	7U09-1 D10	7U20-2 A3	9U07 B8	FU10 F13	IU04 C1	IU20 C5	IU36 C15	IU52 H10	IU68 D6	IU84 E15	IUA0 A14	IUB9 E5
2U07 E3	2U23 C5	2U39 D14	2U55 D4	2U75 D14	2U92 H10	3U15 D1	3U31 D10	3U47 C8	3U63 H9	3U79 E15	3U98 D8	3UB7 H3	5U12 C15	6U06 F9	6U25 G8	7U09-2 E15	7U21 H12	9U08 A8	FU11 C15	IU05 C2	IU21 D4	IU37 E5	IU53 H8	IU69 F4	IU85 E15	IUA1 B13	IUC0 F6
2U08 E3	2U24 C10	2U40 G8	2U56 D9	2U76 D14	2U93 G3	3U16 E13	3U32 B10	3U48 D8	3U64 H9	3U80 E15	3UA0 F7	3UB8 G5	5U13 B15	6U07 G9	6U26 H5	7U10-1 D1	7U22 H14	9U09 G9	FU12 C4	IU06 C3	IU22 D14	IU38 E4	IU54 H11	IU70 F4	IU86 D8	IUA2 H2	IUC1 G5
2U09 C6	2U25 E1	2U41 G8	2U57 D14	2U77 E10	3U01 B1	3U17 C2	3U33 D5	3U49 C13	3U65 H8	3U81 A5	3UA1 G8	3UB9 E5	5U14 D15	6U08 G7	6UB1 H3	7U10-2 F4	7U23 H8	9U10 G9	FU13 C9	IU07 C1	IU23 D8	IU39 E8	IU55 H12	IU71 A5	IU87 B1	IUA3 H2	IUC2 H6
2U10 C7	2U26 D5	2U42 B12	2U58 B12	2U78 D10	3U02 A2	3U18 C1	3U34 B15	3U50 D13	3U66 H8	3U82 A4	3UA2 H14	3UC0 F6	5U15 E5	6U09 F8	7U01-1 D4	7U11-1 A5	7U24-1 E5	9U11 G9	FU14 C14	IU08 E3	IU24 D4	IU40 E9	IU56 H12	IU72 A4	IU88 D9	IUA4 H1	IUC4 H6
2U11 C7	2U27 E10	2U43 D14	2U59 D15	2U79 H11	3U03 A3	3U19 C5	3U35 C14	3U51 F12	3U67 H7	3U83 A4	3UA3 A7	3UC1 H6	5U16 F5	6U10 F8	7U01-2 E3	7U11-2 A4	7U24-2 F6	AU01 D1	FU15 C15	IU09 F12	IU25 D14	IU41 F9	IU57 G12	IU73 C1	IU89 H7	IUA5 E4	IUC5 G6
2U12 E8	2U28 C13	2U44 E9	2U60 F5	2U80 H12	3U04 E14	3U20 B10	3U36 H8	3U52 B15	3U68 H2	3U84 B12	3UA4 A6	3UC2 H6	5U17 F8	6U11 B14	7U02-1 D8	7U13-1 A7	7U25 G6	AU02 D6	FU16 A8	IU10 D3	IU26 D8	IU42 A5	IU58 H14	IU74 D1	IU90 G13	IUA6 E10	IUC6 G6
2U13 E8	2U29 C10	2U45 D4	2U61 F9	2U82 H13	3U05 E4	3U21 E1	3U37 D4	3U53 B15	3U69 H2	3U85 G11	3UA5 B14	3UC3 H6	5U18 F9	6U12 A15	7U02-2 D8	7U13-2 A8	7U26 H5	AU03 D10	FU17 H15	IU11 C6	IU27 E8	IU43 A7	IU59 A7	IU75 E8	IU91 D13	IUA7 H14	
2U14 C5	2U30 E13	2U46 A3	2U62 A6	2U83 G12	3U06 E4	3U22 D5	3U38 D8	3U54 C4	3U70 D13	3U86 H11	3UA6 B13	3UC4 G6	5U19 F9	6U16 C11	7U03-1 D13	7U14-1 B14	7UB1-1 H4	FU01 A15	FU18 G13	IU12 C5	IU28 E11	IU44 D8	IU60 A6	IU76 F8	IU92 F14	IUA9 D13	

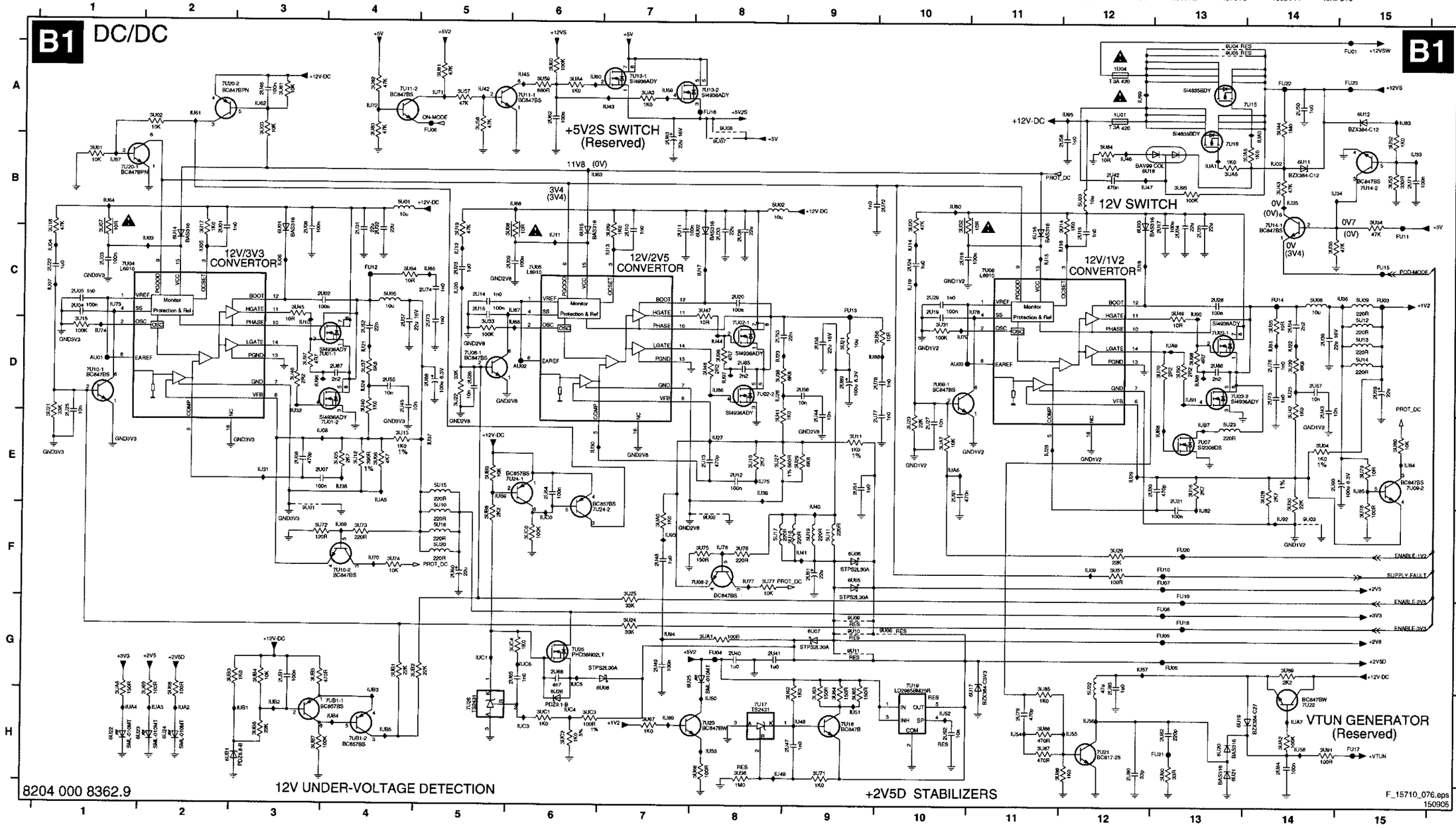

SSB (v3): SPIDER: Tunnel Bus

B6A SPIDER: TUNNELBUS

B6A

7R00-2
SPIDER 2

TUNNELBUS

TUN-SPIDER-RX-DATA0 A2 TUN-RX-DATA0
TUN-SPIDER-RX-DATA1 B2 TUN-RX-DATA1
TUN-SPIDER-RX-DATA2 A1 TUN-RX-DATA2
TUN-SPIDER-RX-DATA3 B6 TUN-RX-DATA3
TUN-SPIDER-RX-DATA4 A3 TUN-RX-DATA4
TUN-SPIDER-RX-DATA5 A4 TUN-RX-DATA5
TUN-SPIDER-RX-DATA6 B5 TUN-RX-DATA6
TUN-SPIDER-RX-DATA7 A5 TUN-RX-DATA7
TUN-SPIDER-RX-DATA8 B11 TUN-RX-DATA8
TUN-SPIDER-RX-DATA9 B3 TUN-RX-DATA9
TUN-SPIDER-RX-DATA10 B12 TUN-RX-DATA10
TUN-SPIDER-RX-DATA11 B7 TUN-RX-DATA11
TUN-SPIDER-RX-DATA12 B8 TUN-RX-DATA12
TUN-SPIDER-RX-DATA13 B9 TUN-RX-DATA13
TUN-SPIDER-RX-DATA14 A9 TUN-RX-DATA14
TUN-SPIDER-RX-DATA15 A10 TUN-RX-DATA15

TUN-SPIDER-RX-BUSY B10 TUN-RX-BUSY
TUN-SPIDER-RX-CLKN A7 TUN-RX-CKAN
TUN-SPIDER-RX-CLKP A6 TUN-RX-CKAP

C9 TUN_RX_VREF1
D6 TUN_RX_VREF2

TUN-TX-DATA0 K2 TUN-SPIDER-TX-DATA0
TUN-TX-DATA1 L1 TUN-SPIDER-TX-DATA1
TUN-TX-DATA2 N1 TUN-SPIDER-TX-DATA2
TUN-TX-DATA3 J1 TUN-SPIDER-TX-DATA3
TUN-TX-DATA4 N2 TUN-SPIDER-TX-DATA4
TUN-TX-DATA5 F2 TUN-SPIDER-TX-DATA5
TUN-TX-DATA6 K1 TUN-SPIDER-TX-DATA6
TUN-TX-DATA7 J2 TUN-SPIDER-TX-DATA7
TUN-TX-DATA8 D2 TUN-SPIDER-TX-DATA8
TUN-TX-DATA9 F1 TUN-SPIDER-TX-DATA9
TUN-TX-DATA10 E1 TUN-SPIDER-TX-DATA10
TUN-TX-DATA11 G1 TUN-SPIDER-TX-DATA11
TUN-TX-DATA12 B1 TUN-SPIDER-TX-DATA12
TUN-TX-DATA13 D1 TUN-SPIDER-TX-DATA13
TUN-TX-DATA14 C2 TUN-SPIDER-TX-DATA14
TUN-TX-DATA15 C1 TUN-SPIDER-TX-DATA15

TUN-TX-BUSY M1 TUN-SPIDER-TX-BUSY
TUN-TX-CKAN H1 TUN-SPIDER-TX-CLKN
TUN-TX-CKAP G2 TUN-SPIDER-TX-CLKP

TUN_TX_VREF1 M3

3R10 47R
3R11 47R
3R02 47R
3R12 47R
3R14 47R
3R13 47R
3R04 47R
3R03 47R
3R06 47R
3R05 47R
3R15 47R
3R07 47R
3R17 47R
3R16 47R
3R09 47R
3R08 47R
3R88 RES 100R +2V5-TUN
3R89 RES 100R
3R71 47R
3R72 47R

3R19 47R
3R40 100R RES
IR29
+2V5-TUN 9R25 RES
+2V5-N 9R26
3R00 1K0
2R27 100n RES
3R01 1K0
2R32 100n
3R85 47R
2R62 1n0
2R63 1n0
IR34
2R18 100n

+3V3-SPIDER
3R46 10K
3R48 4K7
PCI-CLK-SPIDER
9R06
9R08 res
IR24
IR25
RESET-TM
3R47 10K
7R04 BC847BW

7R00-3
SPIDER 2

CONTROL

IR03 Y2 CLK
IR04 A23 RESET
IR05 E22 SCL
IR06 E23 SDA
AB8 BISTEN
IR01 AC8 DIODE_IN
IR00 AC7 DIODE_OUT
H23 INT

TCK D23
TDI G22
TDO G23
TMS F22
TRST F23

JTAG-TCK
JTAG-TD-MOP-SPIDER
9R01 res
JTAG-TD-SPIDER-HDMI
JTAG-TMS
JTAG-TRST

3R37 4K7 res
3R38 4K7 res
SCL-DMA-BUS1 3R39 100R
SDA-DMA-BUS1 3R42 100R
3R43 10K RES
3R44 10K
3R45 10K RES
+3V3-SPIDER
3R49 10K res
IR40
IRQ-SPIDER
IR26
9R17

F_15710_077.eps
150905

8204 000 8422.6

2R18 C6 IR29 C4
2R27 C3 IR34 C6
2R32 C3 IR40 F4
2R62 C4
2R63 C4
3R00 C3
3R01 C3
3R02 A7
3R03 B6
3R04 B7
3R05 B6
3R06 B7
3R07 B6
3R08 B6
3R09 B7
3R10 A7
3R11 A6
3R12 A6
3R13 A6
3R14 A7
3R15 B7
3R16 B6
3R17 B7
3R19 B4
3R37 E3
3R38 E3
3R39 F3
3R40 C3
3R42 F3
3R43 F6
3R44 F6
3R45 F7
3R46 D2
3R47 E3
3R48 D3
3R49 F3
3R71 B6
3R72 C7
3R85 C3
3R88 B7
3R89 B7
7R00-2 A5
7R00-3 D5
7R04 E3
9R01 E7
9R06 E4
9R08 E3
9R17 F3
9R25 C2
9R26 C2
IR00 F4
IR01 F4
IR03 E4
IR04 E4
IR05 E4
IR06 E4
IR24 E2
IR25 E3
IR26 F3

SSB (v3): SPIDER: DDR

2R01 B5	2R04 B6	2R08 F7	2R15 B7	2R19 B8	2R42 B7	2R83 E1	2RA2 B5	3R21 E5	3R51 D4	3R54 D4	3R57 E4	3R60 D5	3R63 D5	3R66 E6	3R69 E6	3R74 E5	7R00-4 C3	9R14 E2	IR19 E5	IR41 E2
2R02 B6	2R05 B6	2R10 B7	2R16 B8	2R22 B3	2R43 E1	2R91 E1	2RA3 F7	3R22 F5	3R52 D4	3R55 D4	3R58 D5	3R61 D5	3R64 D5	3R67 B3	3R70 E6	3R75 E2	7R01 C7	9R15 F6	IR27 B3	
2R03 B6	2R07 B7	2R14 B5	2R17 B8	2R26 B3	2R44 B7	2RA1 B5	3R18 E2	3R50 D4	3R53 D4	3R56 D4	3R59 D5	3R62 D5	3R65 E5	3R68 B3	3R73 E4	5R06 A5	9R13 F6	FR18 A7	IR28 E7	

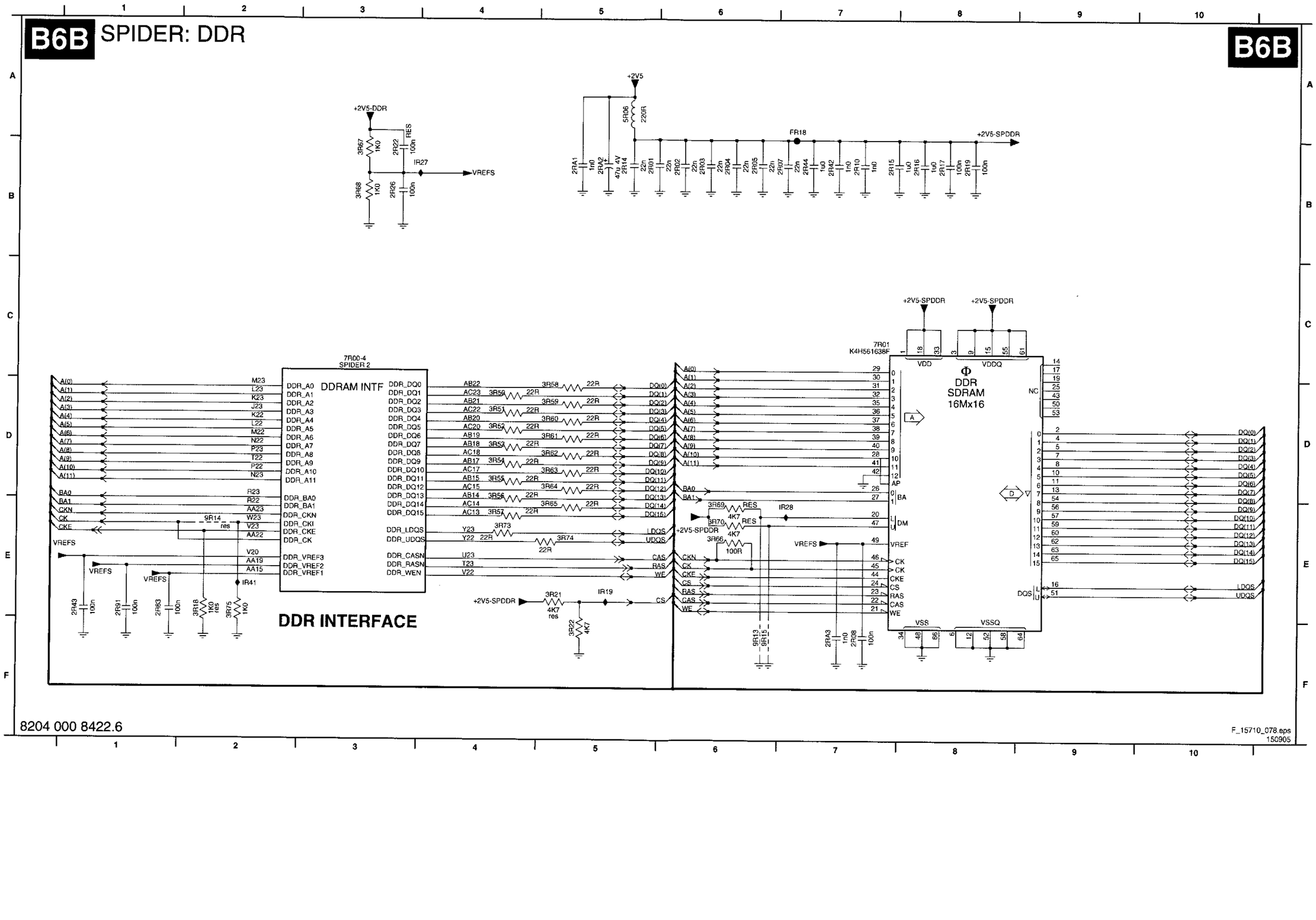

SSB (v3): SPIDER: Supply

2R00 E7	2R20 D4	2R29 D3	2R36 D2	2R47 B2	2R53 E8	2R59 D7	2R67 D7	2R73 D8	2R79 E2	2R87 E3	2R94 E6	2RA4 D5	2RB2 D9	5R02 C7	FR11 D5
2R06 E7	2R21 D4	2R30 D3	2R37 D5	2R48 E6	2R54 C2	2R60 D7	2R68 D7	2R74 D8	2R80 D8	2R88 E3	2R95 E4	2RA5 D1	2RB3 D9	5R03 B1	FR12 E6
2R09 E4	2R23 D4	2R31 D3	2R38 C1	2R49 E5	2R55 D2	2R61 D9	2R69 D8	2R75 D8	2R81 D8	2R89 E1	2R96 E7	2RA6 D1	2RB5 E8	5R04 C1	FR13 B2
2R11 E7	2R24 D1	2R33 D2	2R40 B1	2R50 E5	2R56 D6	2R64 D7	2R70 D8	2R76 E1	2R82 E2	2R90 E3	2R97 E4	2RA7 D1	2RB6 E8	5R05 D6	FR14 C2
2R12 E7	2R25 D3	2R34 D4	2R41 E4	2R51 E5	2R57 E5	2R65 D7	2R71 D8	2R77 D5	2R84 E2	2R92 E3	2R98 E4	2RA8 D1	5R00 C1	7R00-5 A2	FR15 C2
2R13 E1	2R28 D3	2R35 D2	2R46 E6	2R52 E5	2R58 D6	2R66 D8	2R72 D9	2R78 E2	2R86 E2	2R93 E1	2R99 E6	2RA9 D7	5R01 D2	FR10 C9	FR58 D8

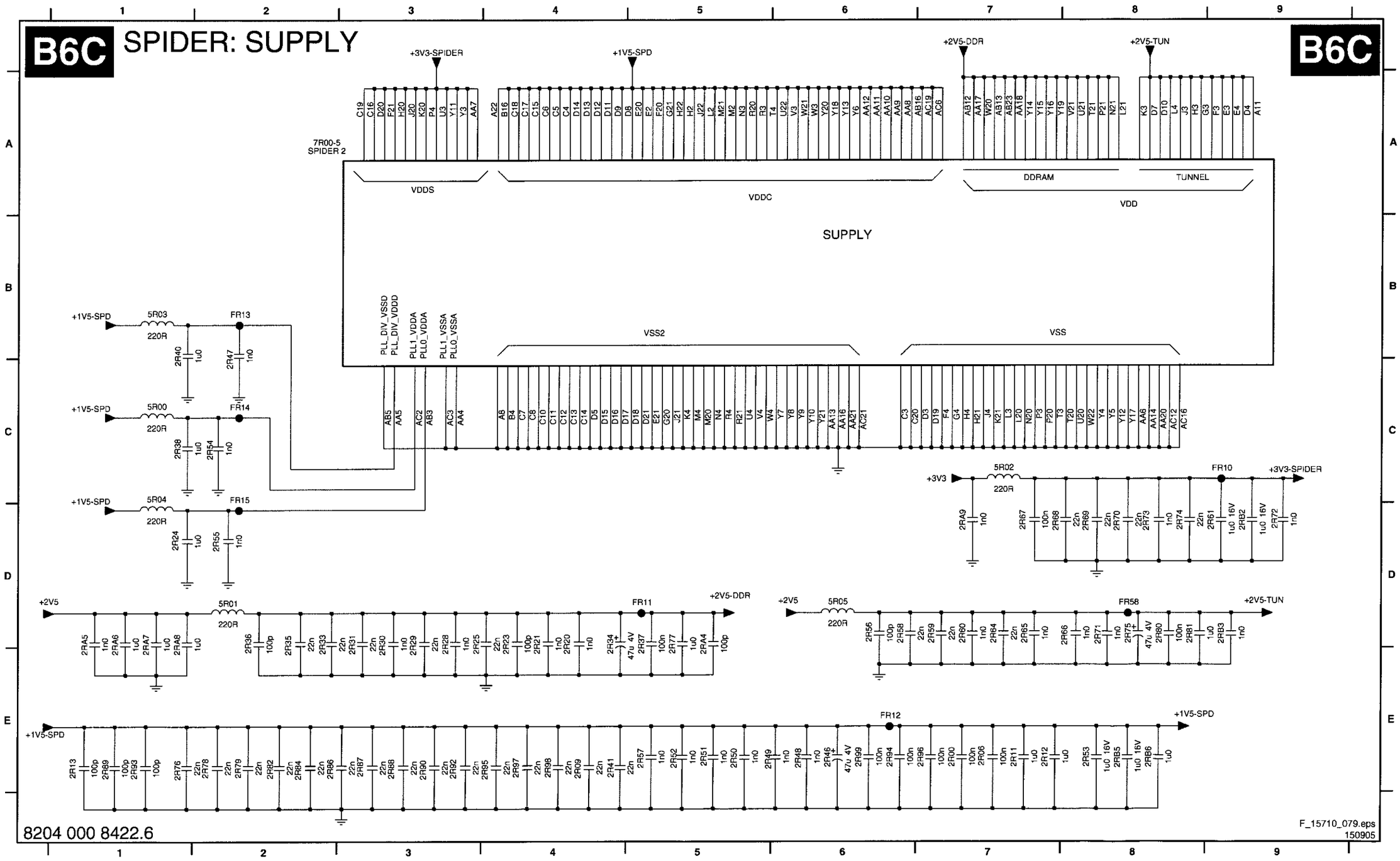

SSB (v3): SPIDER: Debug

B6D SPIDER: DEBUG

B6D

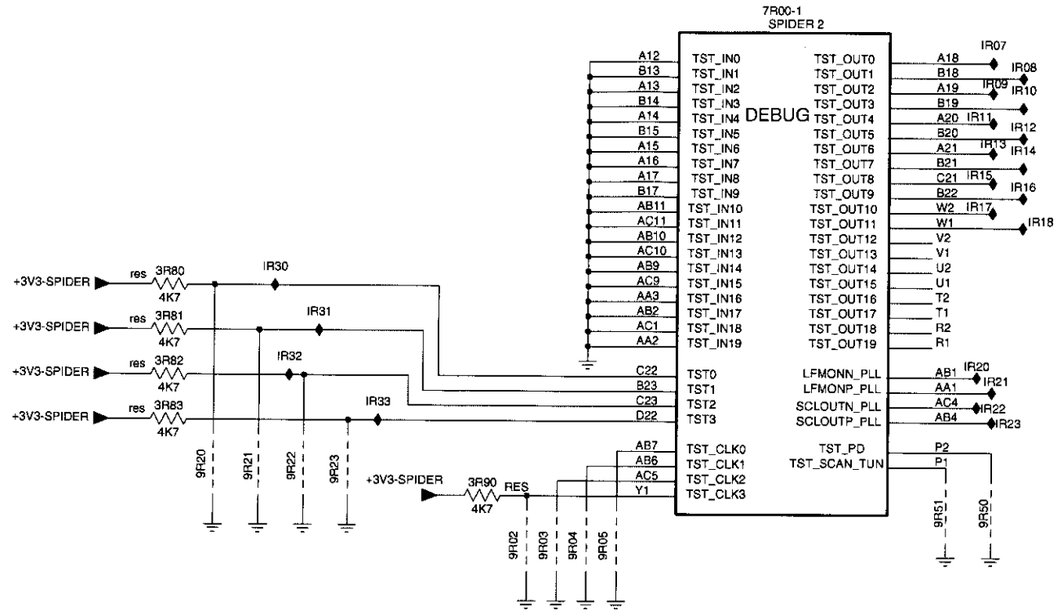

3R80 B3
3R81 C3
3R82 C3
3R83 C3
3R90 C4
7R00-1 A6
9R02 D5
9R03 D5
9R04 D5
9R05 D5
9R20 C3
9R21 C3
9R22 C3
9R23 C4
9R50 D7
9R51 D7
IR07 A7
IR08 A7
IR09 B7
IR10 B7
IR11 B7
IR12 B7
IR13 B7
IR14 B7
IR15 B7
IR16 B7
IR17 B7
IR18 B7
IR20 C7
IR21 C7
IR22 C7
IR23 C7
IR30 B3
IR31 C4
IR32 C4
IR33 C4

8204 000 8422.6

F_15710_080.eps
150905

SSB (v3): VIPER: Control

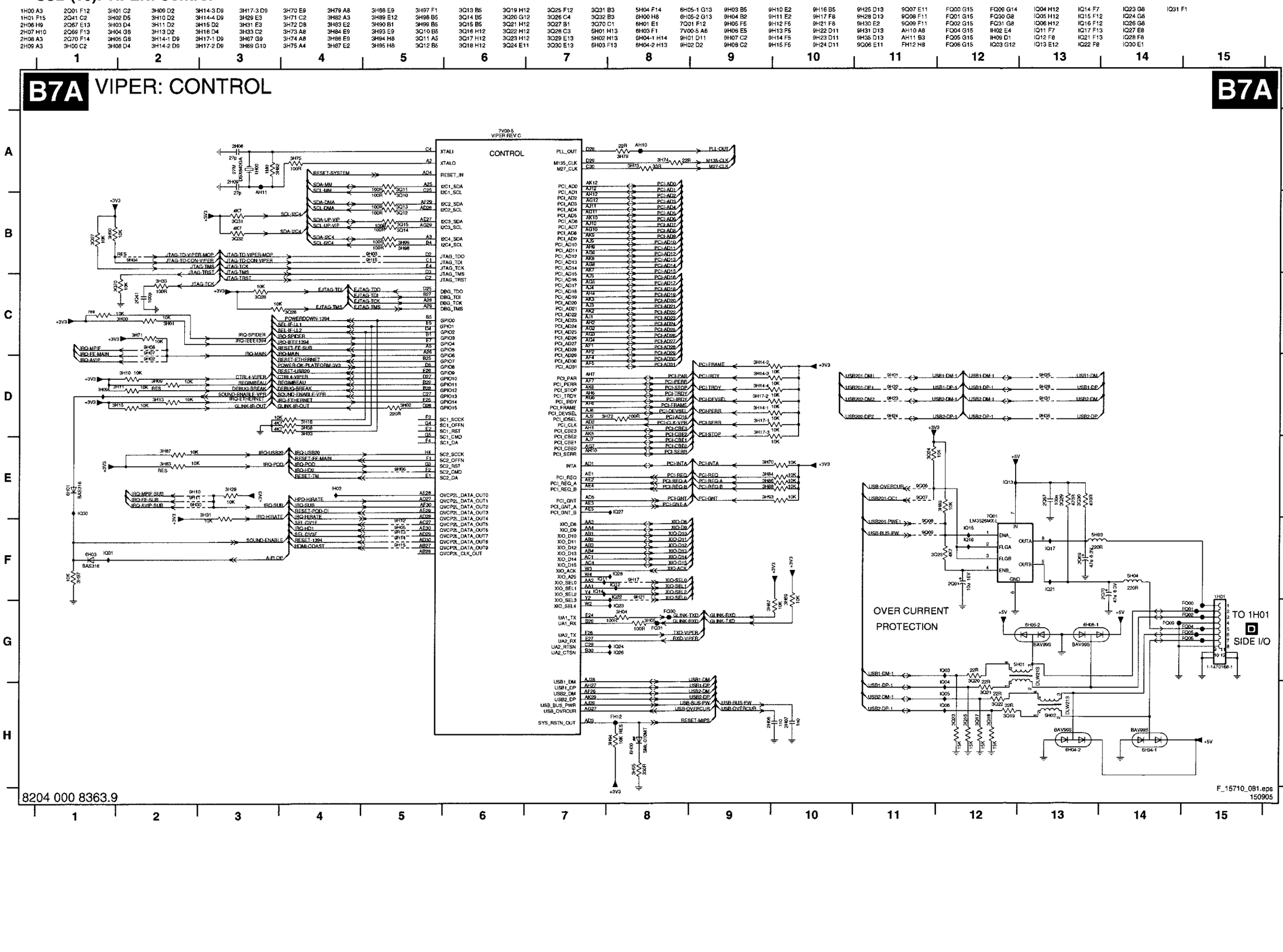

SSB (v3): VIPER: Main Memory

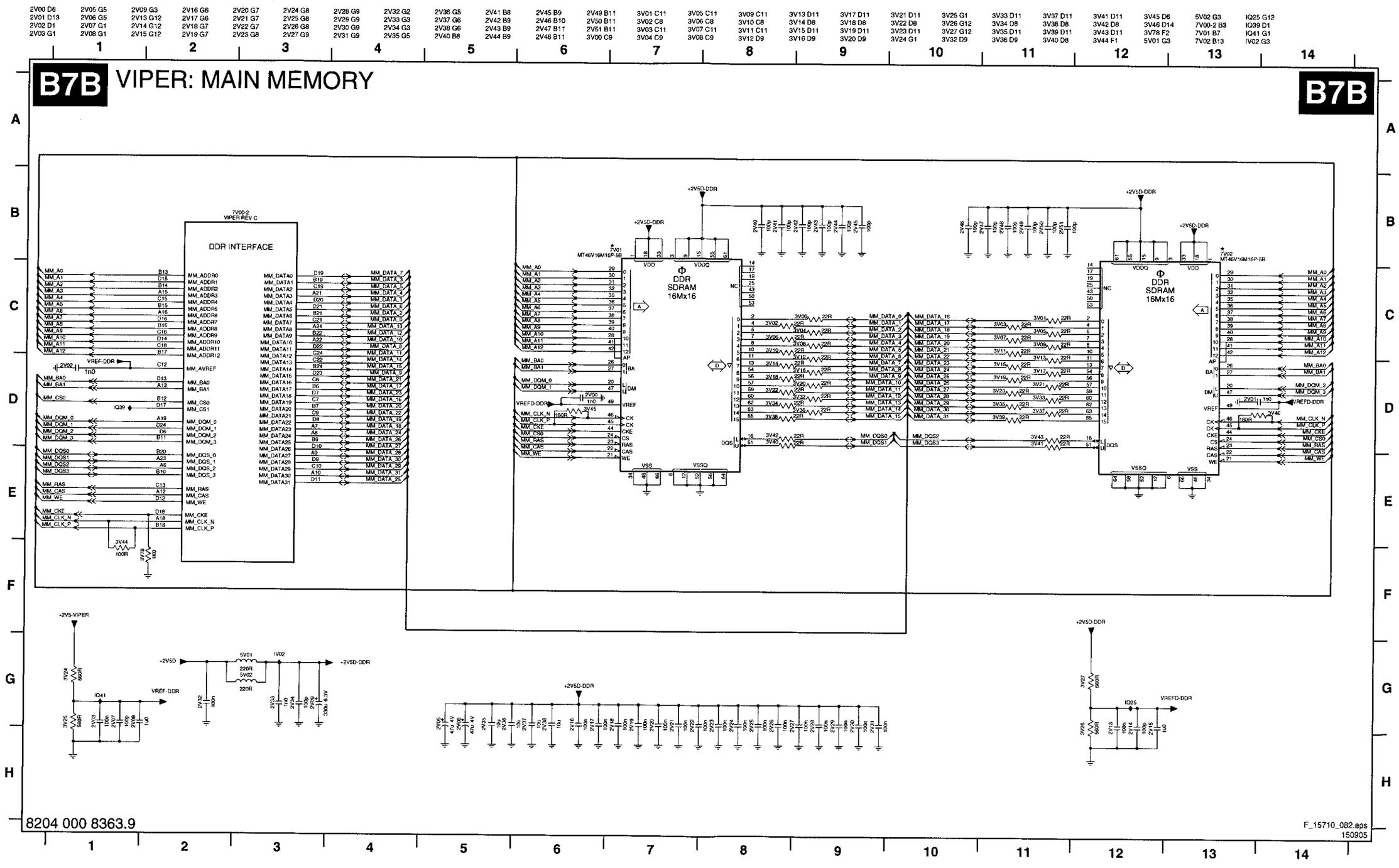

SSB (v3): VIPER: A/V + Tunnel Bus

B7C VIPER: A/V + TUNNELBUS

B7C

7V00-1 VIPER REV C

AUDIO/VIDEO

7V00-4 VIPER REV C

TUNNELBUS

8204 000 8363.9

F_15710_083.eps 150905

2H00 H3
2H01 I6
2H02 H3
2H03 H2
2H12 D11
2H13 D11
2Q25 C11
2Q29 C11
2Q31 C11
3H07 E7
3H12 D10
3H18 D2
3H18 D8
3H20 D8
3H21 D8
3H22 F8
3H28 B2
3H32 C2
3H34-1 A7
3H34-2 A7
3H34-3 A7
3H34-4 A7
3H35-1 C7
3H35-2 C7
3H35-3 B7
3H35-4 B7
3H36-1 C7
3H36-2 C7
3H36-3 B7
3H36-4 B7
3H37-1 B7
3H37-2 B7
3H37-3 B7
3H37-4 B7
3H38-1 C7
3H38-2 C7
3H38-3 C7
3H38-4 C7
3H39-1 C7
3H39-2 C7
3H39-3 C7
3H39-4 C7
3H40-1 B7
3H40-2 B7
3H40-3 B7
3H40-4 B7
3H41-1 B7
3H41-2 B7
3H42 C7
3H44 E7
3H50 H2
3H51 H2
3H65-1 D7
3H65-2 C7
3H65-3 D7
3H65-4 D7
3H92 D10
3Q00 C10
3Q01 D10
3Q03 C10
3Q06 C10
3Q33 H5
3Q34 I6
3Q35 H6
3Q36 I5
3Q37 H6
3Q38 I8
3Q39 H5
3Q41 H6
3Q43 H6
3Q45 H5
3Q47 H6
3Q49 H6
3Q51 H5
3Q53 H6
3Q55 H6
3Q57 H5
3Q59 H6
3Q61 I6
3Q63 I5
5H05 H2
5Q05 C11
5Q06 D11
7V00-1 A5
7V00-4 G7
9H03 E8
9H18 D2
9H19 D2
9H20 E8
9H26 G7
9H27 G7
9H29 G6
9H32 E2
9H33 E2
9H34 G6
9H50 F8
9H51 F8
9H52 F8
9H53 F8
9H54 F8
9H55 F8
9H56 E8
9H57 E8
9H59 E8
IH00 E3
IH01 D3
IH03 E3
IH04 F7
IH05 F7
IH06 D8
IH07 D8
IH08 D8
IH10 D4
IH11 D4
IH12 D10
IH13 D11
IH14 D12
IH15 D4
IQ00 C10
IQ01 C11
IQ02 C12
IQ35 H2
IQ36 H3
IQ40 F7

SSB (v3): VIPER: Supply

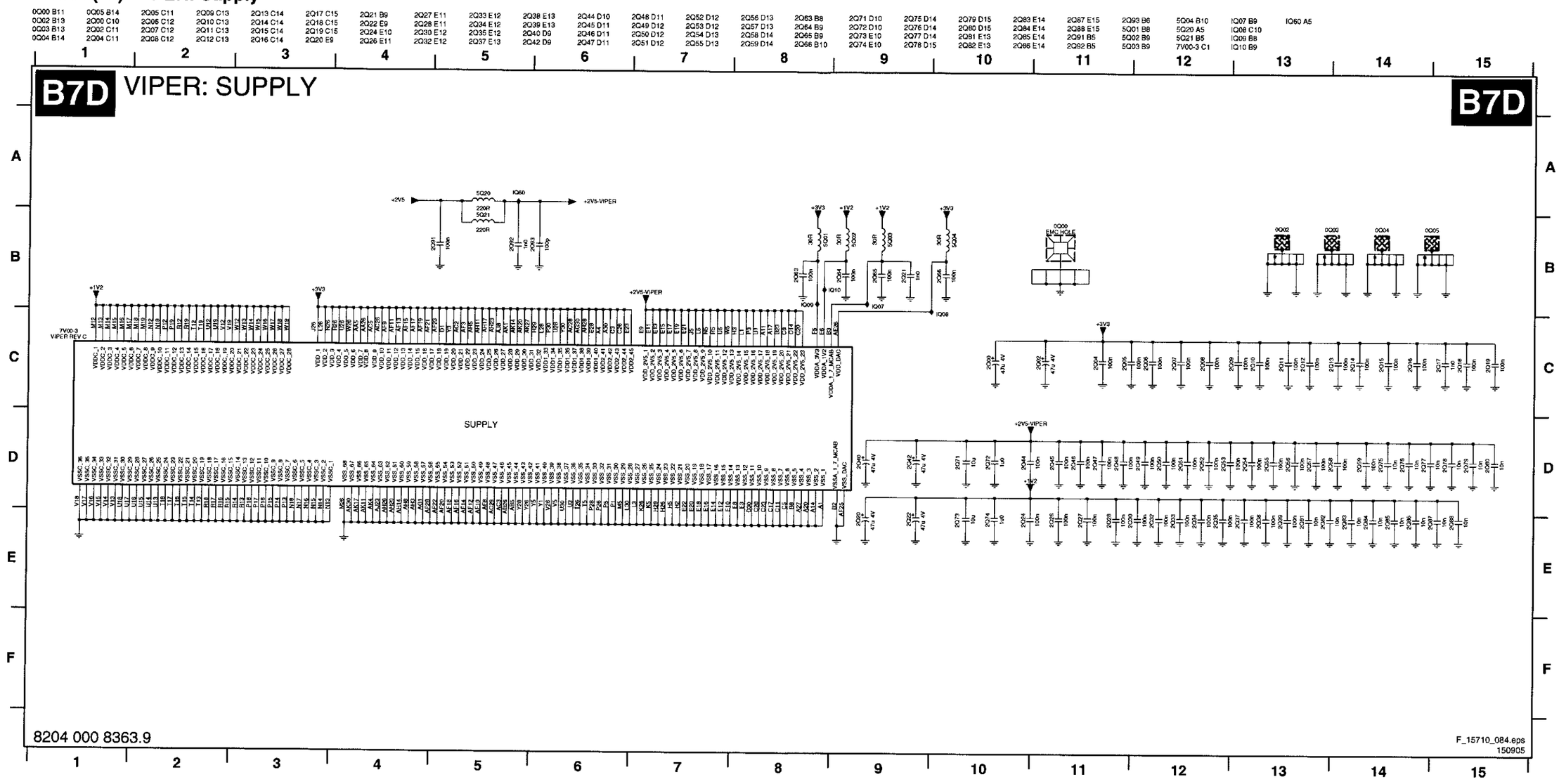

SSB (v3): VIPER: Debug

B7E VIPER: DEBUG

B7E

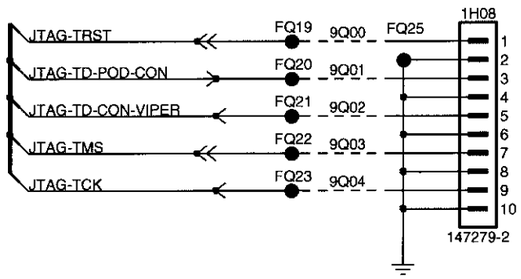

FOR FACTORY USE ONLY

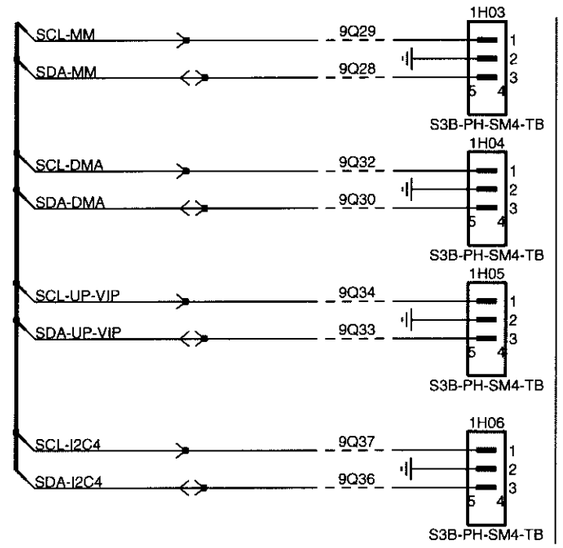

FOR FACTORY USE ONLY

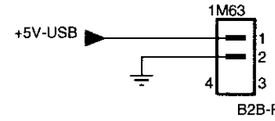

N.C

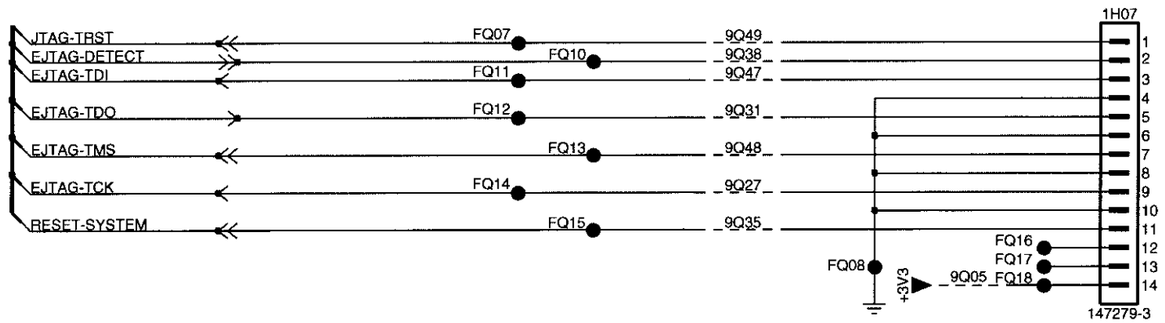

FOR FACTORY USE ONLY

1H03 A6
1H04 B6
1H05 B6
1H06 C6
1H07 D6
1H08 B3
1M63 C6
9Q00 B3
9Q01 B3
9Q02 B3
9Q03 B3
9Q04 B3
9Q05 E5
9Q27 E5
9Q28 A6
9Q29 A6
9Q30 B6
9Q31 D5
9Q32 B6
9Q33 B6
9Q34 B6
9Q35 E5
9Q36 C6
9Q37 C6
9Q38 D5
9Q47 D5
9Q48 D5
9Q49 D5
FQ07 D4
FQ08 E5
FQ10 D4
FQ11 D4
FQ12 D4
FQ13 D4
FQ14 E4
FQ15 E4
FQ16 E6
FQ17 E6
FQ18 E6
FQ19 B3
FQ20 B3
FQ21 B3
FQ22 B3
FQ23 B3
FQ25 B3

8204 000 8363.9

F_15710_085.eps
150905

SSB (v3): UART Switch / Stby Supply / Voltage Detect / I²C

B8A UART SWITCH / STBY SUPPLY / VOLTAGE DETECT / I²C

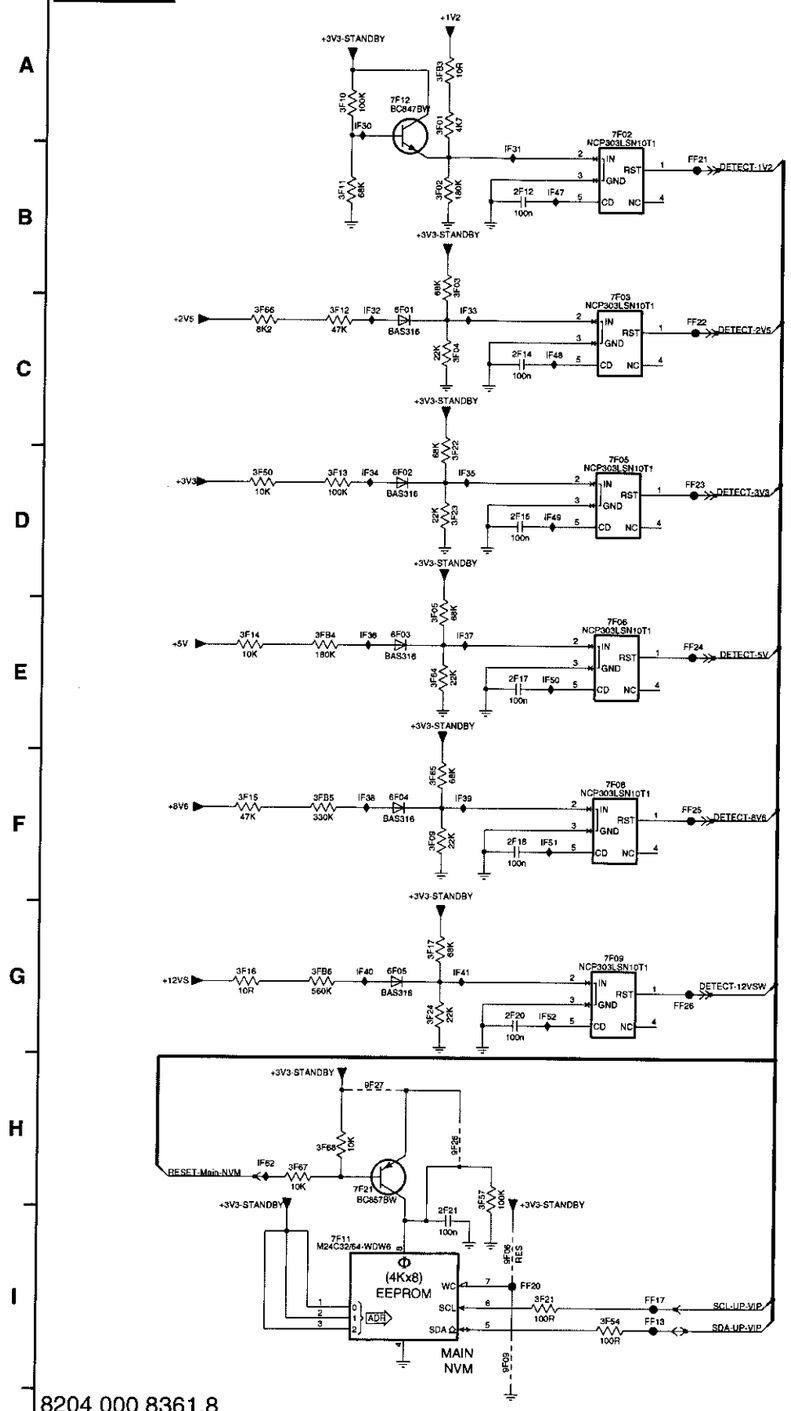

8204 000 8361.8

F_15710_086.eps
150905

2F12	B4	7F04 C7
2F13	C7	7F05 D4
2F14	C4	7F06 E4
2F15	D4	7F07 E7
2F16	E7	7F08 F4
2F17	E4	7F09 G4
2F18	F4	7F10 G7
2F19	G7	7F11 I2
2F20	G4	7F12 A3
2F21	I3	7F13 I11
2F23	F12	7F14-1 F11
2F24	B10	7F14-2 G11
2F25	C10	7F14-3 G11
2F26	D10	7F14-4 H11
2F27	C12	7F15 A10
2F28	D13	7F16 C11
3F01	A3	7F17 B12
3F02	B3	7F18 D9
3F03	B3	7F19 C13
3F04	C3	7F20 D11
3F05	E3	7F21 H2
3F06	A12	9F00 C7
3F07	E8	9F01 C7
3F08	E8	9F02 D7
3F09	F3	9F03 E7
3F10	A2	9F04 F7
3F11	B2	9F05 F7
3F12	C2	9F06 I4
3F13	D2	9F07 I7
3F14	E2	9F08 I7
3F15	F2	9F09 I4
3F16	G2	9F11 F10
3F17	G3	9F12 F10
3F18	B6	9F19 A12
3F19	B6	9F22 F12
3F20	I12	9F23 G12
3F21	I4	9F24 G12
3F22	D3	9F25 H12
3F23	D3	9F26 H3
3F24	G3	9F27 H3
3F25	G8	9F30 H8
3F26	G8	9F31 H8
3F27	C10	9F32 H7
3F28	D6	9F33 I7
3F29	D8	FF10 B10
3F36	C6	FF11 D7
3F37	C8	FF12 E7
3F42	D8	FF13 I4
3F43	D8	FF14 I10
3F50	D2	FF15 I11
3F54	I4	FF16 D12
3F55	G12	FF17 I4
3F56	G12	FF18 F7
3F57	H3	FF19 F7
3F58	F6	FF20 I4
3F59	F8	FF21 B5
3F60	F12	FF22 C5
3F61	F12	FF23 D5
3F62	E6	FF24 E5
3F63	E8	FF25 F5
3F64	E3	FF26 G5
3F65	F3	FF27 F10
3F66	C2	FF28 C11
3F67	H2	IF16 D8
3F68	H2	IF18 E8
3F72	F6	IF19 F8
3F73	F6	IF26 F8
3F74	F8	IF28 I8
3F75	F8	IF29 I8
3F76	G6	IF30 A2
3F77	G8	IF31 B3
3F78	G6	IF32 C3
3F79	G8	IF33 C3
3F80	I8	IF34 D3
3F81	I8	IF35 D3
3F82	F10	IF36 E3
3F85	I10	IF37 E3
3F86	F10	IF38 F3
3F88	G10	IF39 F3
3F90	G10	IF40 G3
3FA0	A10	IF41 G3
3FA1	A11	IF42 C10
3FA2	A10	IF43 C11
3FA3	C11	IF44 C12
3FA4	C11	IF45 C13
3FA5	C9	IF46 D10
3FA6	D10	IF47 B4
3FA7	D10	IF48 C4
3FA8	D10	IF49 D4
3FA9	C12	IF50 E4
3FB1	C13	IF51 F4
3FB2	C13	IF52 G4
3FB3	A3	IF53 B10
3FB4	E2	IF54 B11
3FB5	F2	IF55 A12
3FB6	G2	IF57 C8
6F01	C3	IF58 C8
6F02	D3	IF62 H2
6F03	E3	
6F04	F3	
6F05	G3	
7F01	I12	
7F02	A4	
7F03	C4	

SSB (v3): NAND Flash

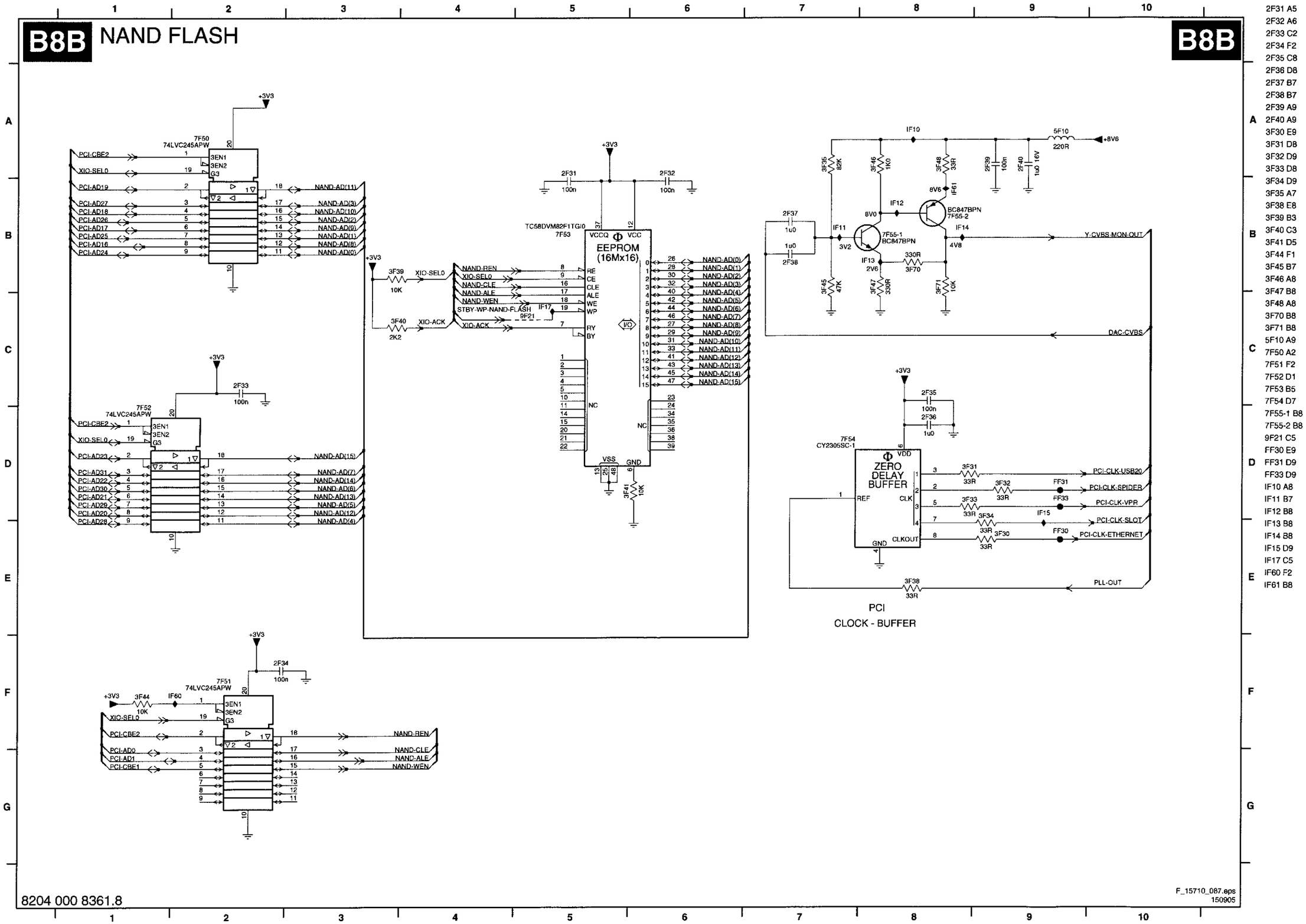

2F31 A5
2F32 A6
2F33 C2
2F34 F2
2F35 C8
2F36 D8
2F37 B7
2F38 B7
2F39 A9
2F40 A9
3F30 E9
3F31 D8
3F32 D9
3F33 D8
3F34 D9
3F35 A7
3F38 E8
3F39 B3
3F40 C3
3F41 D5
3F44 F1
3F45 B7
3F46 A8
3F47 B8
3F48 A8
3F70 B8
3F71 B8
5F10 A9
7F50 A2
7F51 F2
7F52 D1
7F53 B5
7F54 D7
7F55-1 B8
7F55-2 B8
9F21 C5
FF30 E9
FF31 D9
FF33 D9
IF10 A8
IF11 B7
IF12 B8
IF13 B8
IF14 B8
IF15 D9
IF17 C5
IF60 F2
IF61 B8

SSB (v3): Anti Plop

2F62 B2	3F52 C2	6F62 B2	7F61-2 C2	IF22 C3	IF25 C2	IF59 B2
3F49 B2	3F53 C3	7F60 C1	IF20 B1	IF23 C2	IF27 C2	
3F51 B2	6F61 B1	7F61-1 C2	IF21 C3	IF24 C1	IF56 B1	

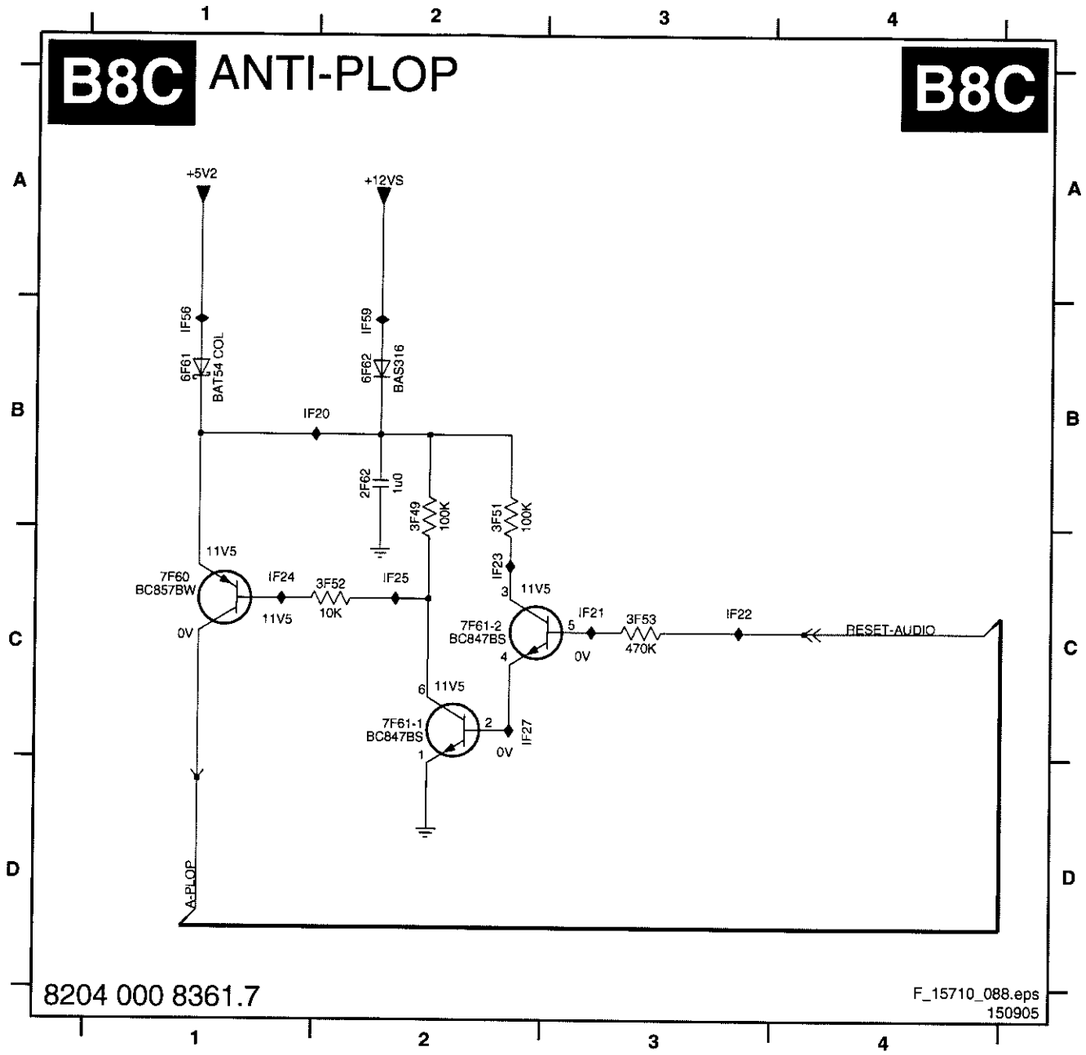

Personal Notes:

E_06532_012.eps
131004

SSB (v3): MOP: Supply

1G02 C11 2G03 A2 2G07 A3 2G11 A1 2G15 B3 2G19 C2 2G23 C2 2G31 A6 2G35 A7 2G39 A10 2G53 D5 2G57 E3 3G01 E4 3G05 G3 3G09 C7 3G13 C10 3G17 D10 5G03 C1 7G02-1 G4 7G04-6 B14 FG02 D11 FG06 C12 FG12 G3 IG09 F3
2G00 A2 2G04 A3 2G08 A3 2G12 B3 2G16 B4 2G20 C2 2G24 C3 2G32 A6 2G36 A7 2G50 A10 2G54 E5 2G58 G4 3G02 F4 3G06 E7 3G10 C9 3G14 C10 5G00 A9 5G16 B3 7G02-2 G4 7G03 D6 9G00 D9 FG03 C11 FG07 A3 FG33 A11 IG10 F4
2G01 A2 2G05 A4 2G09 A3 2G13 B3 2G17 B3 2G21 C2 2G25 C3 2G33 A6 2G37 A7 2G51 A11 2G55 E4 2G59 F3 3G03 F4 3G07 C6 3G11 C9 3G15 C10 5G01 A5 7G00 B2 7G04-1 D8 FG01 C11 FG05 D12 FG08 B4 FG34 C3 IG12 F4
2G02 A2 2G06 A3 2G10 A4 2G14 B3 2G18 B2 2G22 C2 2G30 A6 2G34 A6 2G38 A7 2G52 A11 2G56 F4 3G00 E4 3G04 F3 3G08 C7 3G12 C10 3G16 C10 5G02 A1 7G01 E4 7G04-1 D8 FG01 C11 FG05 D12 FG09 A8 IG08 E4

B9A MOP: SUPPLY

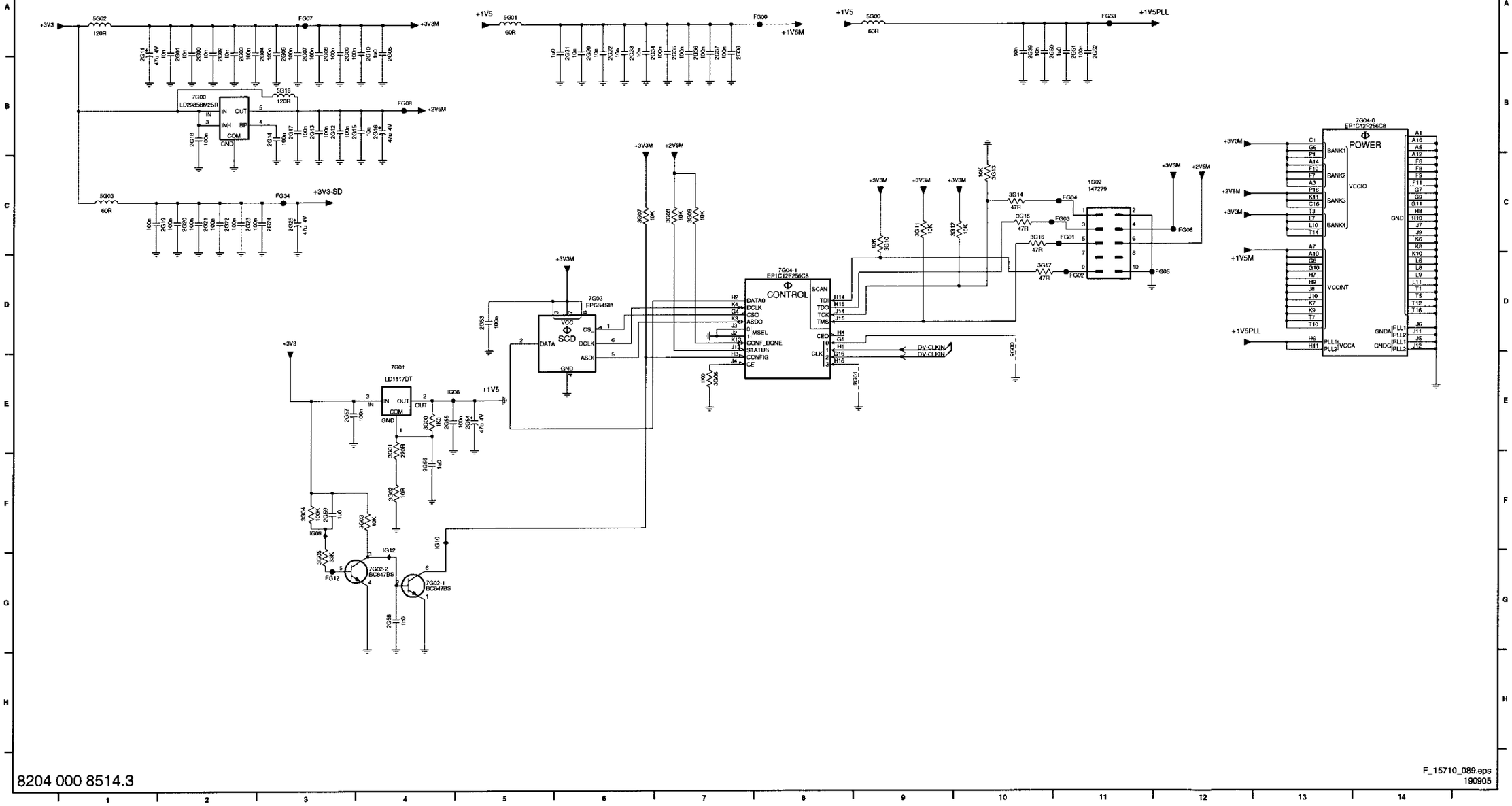

8204 000 8514.3

F_15710_089.eps
190905

SSB (v3): MOP: Control

B9B MOP: CONTROL

B9B

1D40 A2 IGB2 E6
2G66 A4 IGB3 E6
2G67 A1
2G68 B1
2G69 B4
2G71 C4
2G72 C1
2G73 A7
2G74 A7
2G75 C1
2G76 C2
2GB0 D6
2GB1 E5
3G28 B4
3G66 B5
3G67 B5
3G68 A9
3G69 A8
3G71 A5
3G73 B5
3G74 C5
3G75 C5
3G80 A8
3G81 A7
3G82 A7
3G83 A6
3GC0 E6
3GC1 E6
5G66 A1
5G67 B1
5G69 C1
5G70 C1
5G71 C1
5GB5 D4
5GB6 D4
6G02 C8
6G03 B8
6GA2 E6
6GA4 E8
7G66-1 B7
7G66-2 C7
7GA4 E5
9G66 C8
9G67 B7
9GA1 D6
9GA3 F3
9GA4 F3
9GA5 F5
9GA6 F5
FG60 E4
FG61 E4
FG63 B9
FG64 C9
FG66 C3
FG67 A4
FG68 A4
FG70 B4
FG71 B4
FG72 B4
FG73 B4
FG74 B2
FG75 B2
IG64 B7
IG65 C7
IG68 B7
IG69 B8
IGB0 D5
IGB1 D7

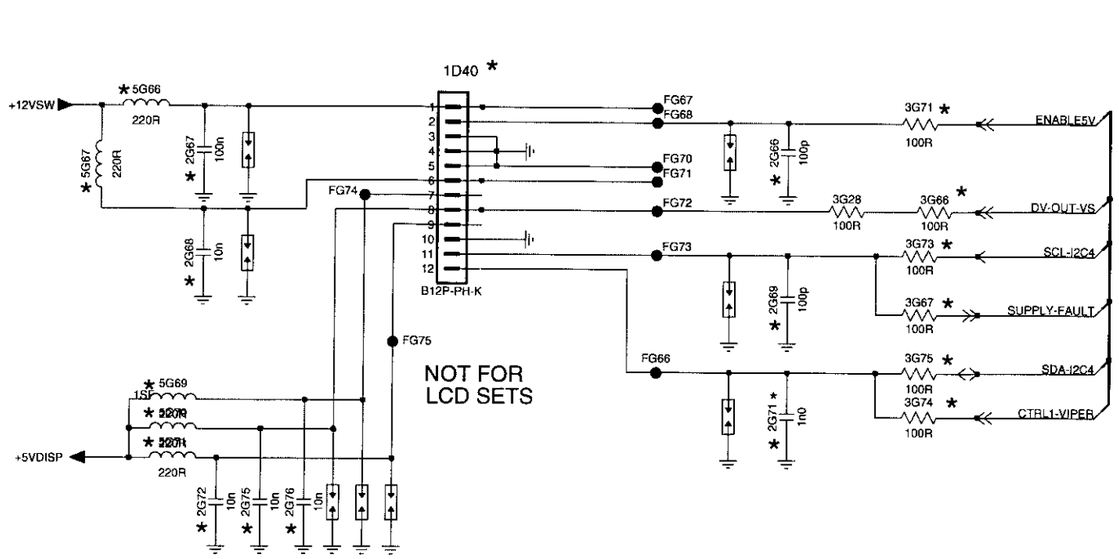

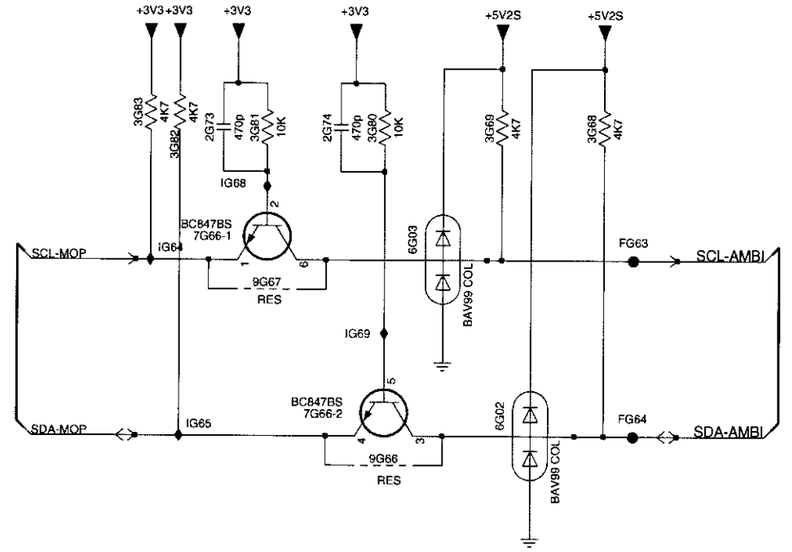

I2C-BUFFER *

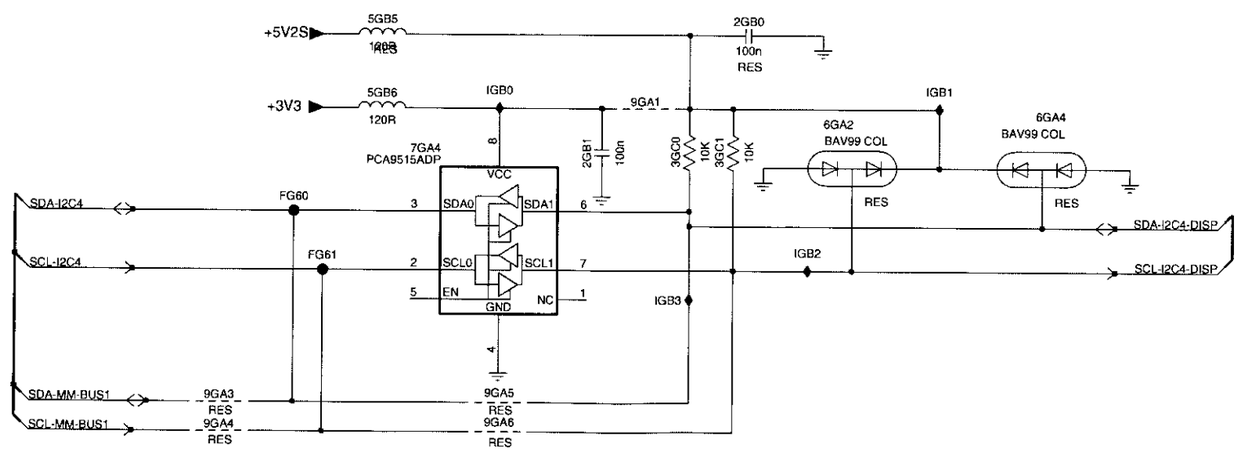

8204 000 8514.3

F_15710_090.eps
150905

SSB (v3): MOP: LVDS

B9C MOP: LVDS

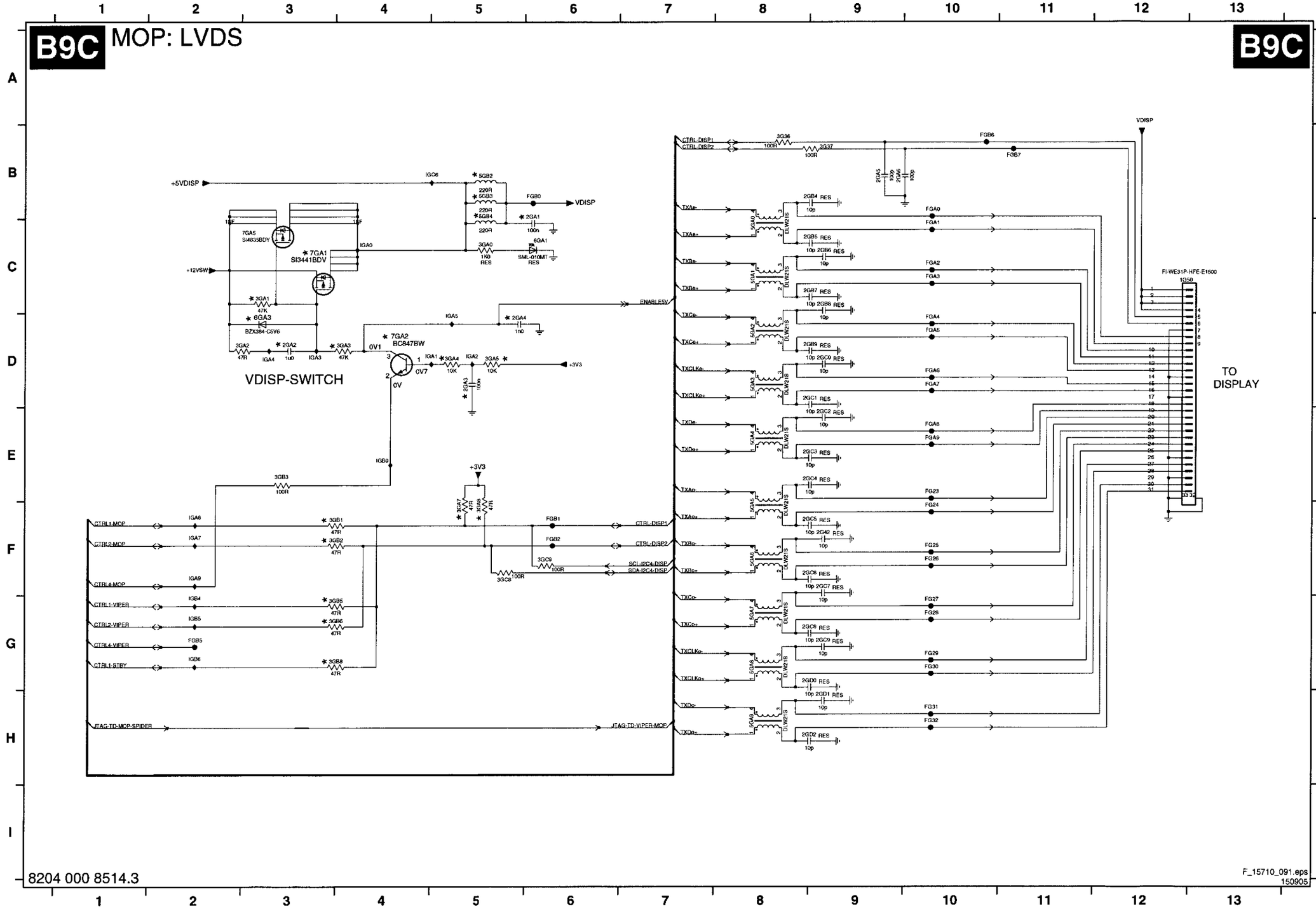

1G50 C13 IGA9 F2
2GA2 F9 IGB4 G2
2GA1 B6 IGB5 G2
2GA2 D3 IGB6 G2
2GA3 D5 IGB9 E4
2GA4 D5 IGC6 B5
2GA5 B9
2GA6 B9
2GB4 B9
2GB5 C9
2GB6 C9
2GB7 C9
2GB8 C9
2GB9 D9
2GC0 D9
2GC1 D9
2GC2 E9
2GC3 E9
2GC4 E9
2GC5 F9
2GC6 F9
2GC7 F9
2GC8 G9
2GC9 G9
2GD0 G9
2GD1 H9
2GD2 H9
3G36 B8
3G37 B9
3GA0 C5
3GA1 C3
3GA2 D3
3GA3 D4
3GA4 D5
3GA5 D5
3GA7 F5
3GA8 F5
3GB1 F4
3GB2 F4
3GB3 E3
3GB5 G4
3GB6 G4
3GB8 G4
3GC8 F5
3GC9 F6
5GA0 C8
5GA1 C8
5GA2 D8
5GA3 D8
5GA4 E8
5GA5 F8
5GA6 F8
5GA7 G8
5GA8 G8
5GA9 H8
5GB2 B5
5GB3 B5
5GB4 B5
6GA1 C6
6GA3 D3
7GA1 C3
7GA2 D4
7GA5 C2
FG23 E10
FG24 F10
FG25 F10
FG26 F10
FG27 G10
FG28 G10
FG29 G10
FG30 G10
FG31 H10
FG32 H10
FGA0 B10
FGA1 C10
FGA2 C10
FGA3 C10
FGA4 D10
FGA5 D10
FGA6 D10
FGA7 D10
FGA8 E10
FGA9 E10
FGB0 B6
FGB1 F6
FGB2 F6
FGB5 G2
FGB6 B10
FGB7 B11
IGA0 C4
IGA1 D5
IGA2 D5
IGA3 D3
IGA4 D3
IGA5 D5
IGA6 F2
IGA7 F2
IGB4 G2
IGB5 G2
IGB6 G2
IGB9 E4
IGC6 B5

SSB (v3): MOP: I/O

B9D MOP: IO

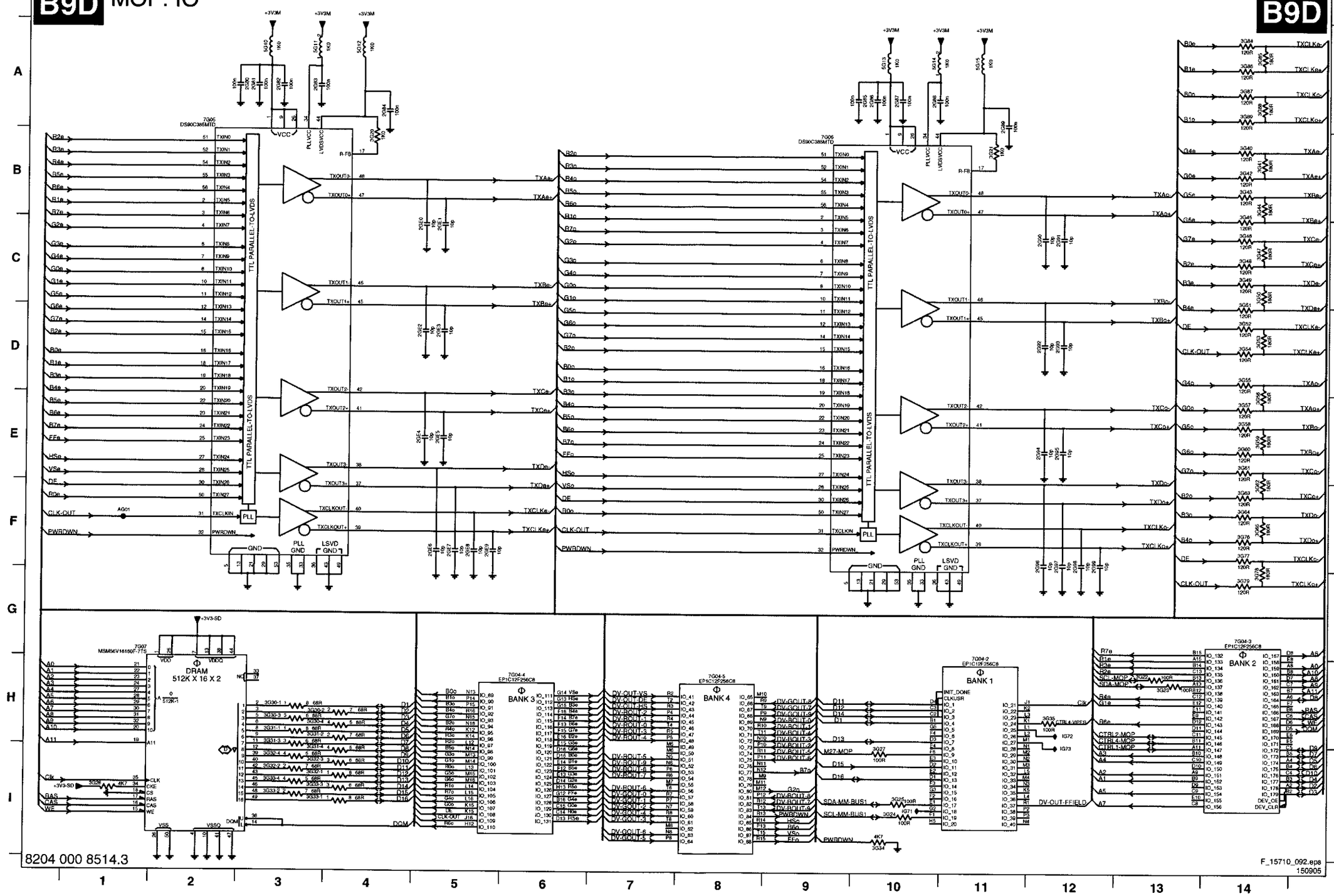

SSB (v3): HDMI

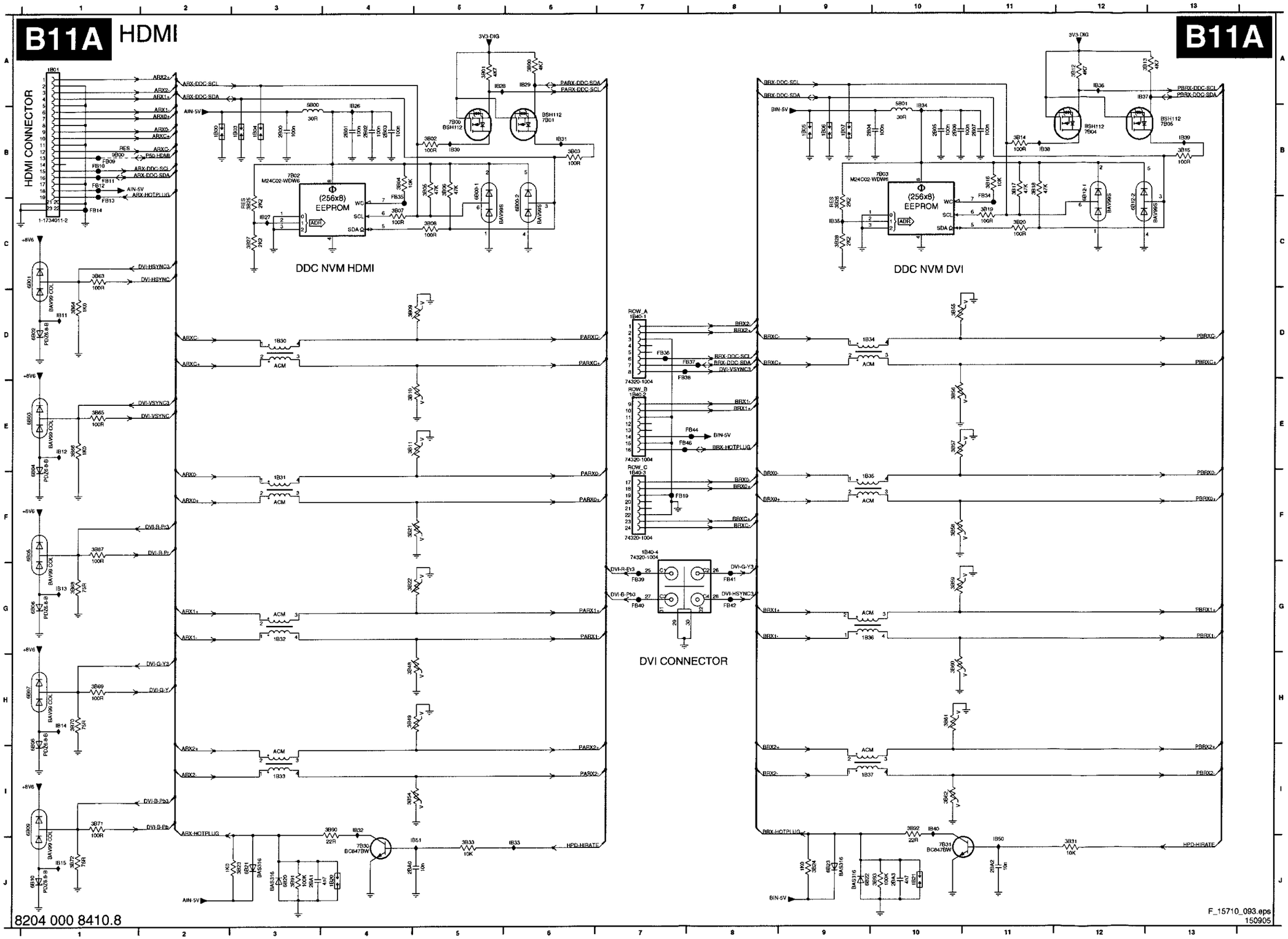

1B00 B2
1B01 A1
1B03 B3
1B04 B3
1B05 B9
1B06 B9
1B07 B9
1B20 J4
1B21 J10
1B30 D3
1B31 F3
1B32 G3
1B33 I3
1B34 D8
1B35 F9
1B36 G9
1B37 I9
1B40-1 D7
1B40-2 E7
1B40-3 F7
1B40-4 F7
2B00 B3
2B01 B4
2B02 B4
2B03 B4
2B04 B9
2B05 B10
2B06 B10
2B07 B11
2BA0 J4
2BA1 J3
2BA2 J11
2BA3 J10
3B00 A6
3B01 A5
3B02 B5
3B03 B6
3B04 B4
3B05 B5
3B06 B5
3B07 C4
3B08 C5
3B09 D4
3B10 E4
3B11 E4
3B12 A12
3B13 A12
3B14 B11
3B15 B13
3B16 B11
3B17 B11
3B18 B11
3B19 C11
3B20 C11
3B21 F4
3B22 G4
3B23 J3
3B24 J9
3B25 C3
3B26 C9
3B27 C3
3B28 C9
3B31 J12
3B33 J5
3B48 H4
3B49 H4
3B54 I4
3B55 D10
3B56 E10
3B57 E10
3B58 F10
3B59 G10
3B60 H10
3B61 H10
3B62 I10
3B63 C1
3B64 D1
3B65 E1
3B66 E1
3B67 F1
3B68 G1
3B69 H1
3B70 H1
3B71 I1
3B72 J1
3B90 I4
3B91 J3
3B92 I10
3B93 J10
5B00 B3
5B01 B10
6B00-1 B5
6B00-2 C6
6B01 C1
6B02 D1
6B03 E1
6B04 E1
6B05 F1
6B06 G1
6B07 H1
6B08 H1
6B09 I1
6B10 J1
6B12-1 B12
6B12-2 C12
6B20 J3
6B21 J3
6B22 J9
6B23 J9
7B00 B5
7B01 B6
7B02 B3
7B03 B10
7B04 B12
7B05 B13
7B30 J4
7B31 J10
9B00 B1

FB09 B1
FB10 B1
FB11 B1
FB12 B1
FB13 C1
FB14 C1
FB19 F7
FB34 C11
FB35 C4
FB36 D7
FB37 D8
FB38 E7
FB39 G7
FB40 G7
FB41 G8
FB42 G8
FB44 E8
FB46 E7
IB11 D1
IB12 E1
IB13 G1
IB14 H1
IB15 J1
IB26 A4
IB27 C3
IB28 A5
IB29 A6
IB30 B5
IB31 B6
IB32 I4
IB33 J6
IB34 B10
IB35 C9
IB36 A12
IB37 A12
IB38 B11
IB39 B13
IB40 I10
IB50 J11
IB51 J5

SSB (v3): HDMI: I/O + Control

B11B HDMI: I/O + CONTROL

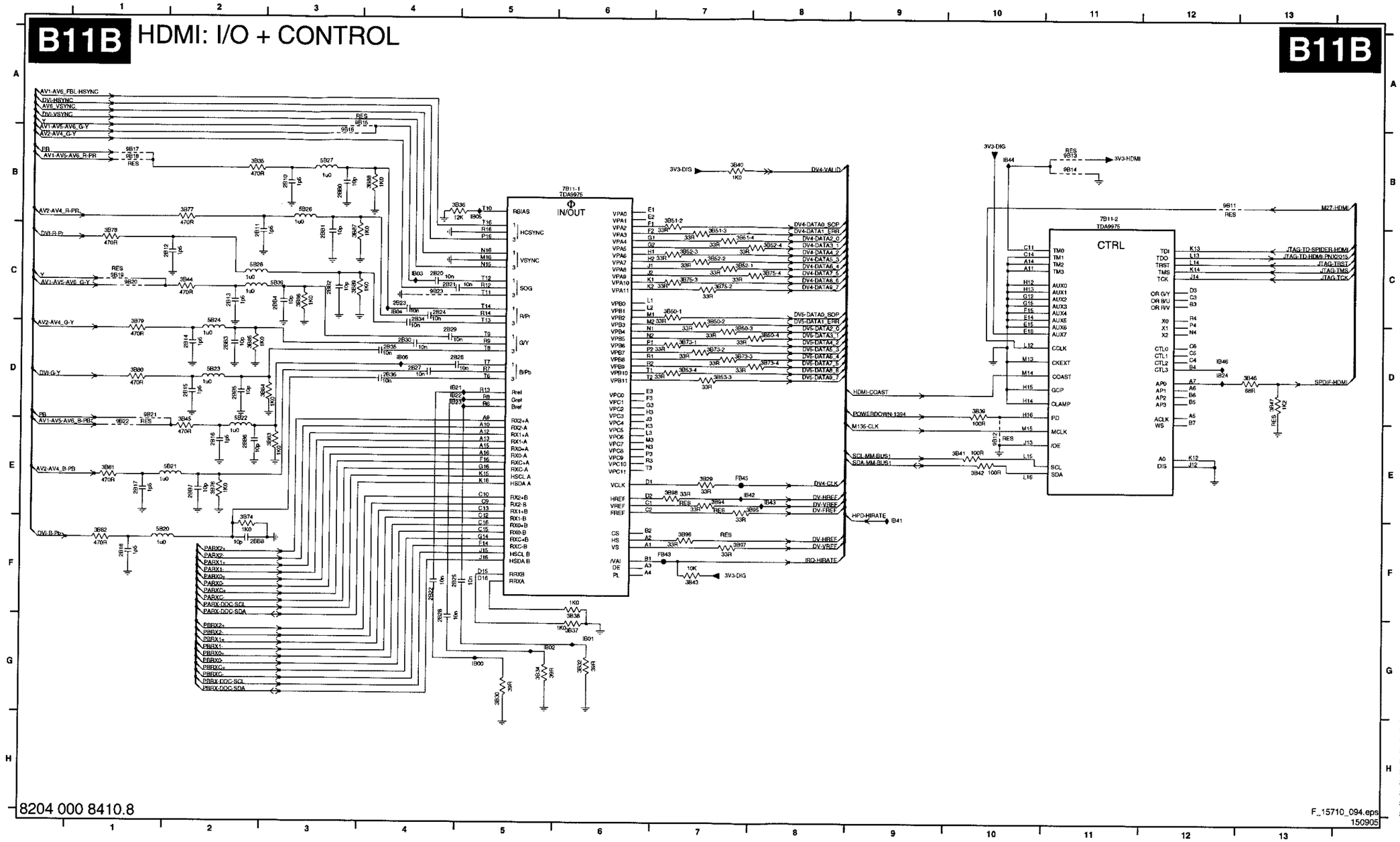

2B10 B3 3B83 E3
2B11 C2 3B84 D3
2B12 C2 3B85 D2
2B13 C2 3B86 C3
2B14 D2 3B87 C3
2B15 D2 3B88 B4
2B16 E2 3B89 C3
2B17 E1 3B94 E7
2B18 F1 3B95 E8
2B20 C4 3B96 F7
2B21 C4 3B97 F7
2B22 F4 3B98 E7
2B23 C4 5B20 F1
2B24 C4 5B21 E2
2B25 F4 5B22 E2
2B26 D4 5B23 D2
2B27 D4 5B24 D2
2B28 G4 5B26 B3
2B29 D4 5B27 B3
2B30 D4 5B28 C2
2B34 C4 5B39 C3
2B35 D4 7B11-1 B6
2B36 D4 7B11-2 B11
2B80 B3 9B11 B12
2B81 C3 9B12 E10
2B82 C3 9B13 B11
2B83 D2 9B14 B11
2B84 C3 9B15 A3
2B85 D2 9B16 B3
2B86 E2 9B17 B1
2B87 E2 9B18 B1
2B88 F2 9B19 C1
3B29 E7 9B20 C1
3B30 G5 9B21 D1
3B32 G6 9B22 E1
3B34 G5 9B23 C4
3B35 B2 FB43 F7
3B36 B4 FB45 E7
3B37 G6 IB00 G5
3B38 F6 IB01 G6
3B39 D10 IB02 G5
3B40 B8 IB03 C4
3B41 E10 IB04 C4
3B42 E10 IB05 B5
3B43 F7 IB06 D4
3B44 C2 IB21 D4
3B45 E2 IB22 D4
3B46 D13 IB23 D4
3B47 D13 IB24 D12
3B50-1 C7 IB41 E9
3B50-2 C7 IB42 E7
3B50-3 D7 IB43 E8
3B50-4 D8 IB44 B10
3B51-2 B7 IB46 D12
3B51-3 C7
3B51-4 C7
3B52-1 C7
3B52-2 C7
3B52-3 C7
3B52-4 C8
3B53-3 D7
3B53-4 D7
3B73-1 D7
3B73-2 D7
3B73-3 D7
3B73-4 D8
3B74 F2
3B75-2 C7
3B75-3 C7
3B75-4 C8
3B76 E2
3B77 B2
3B78 C1
3B79 D1
3B80 D1
3B81 E1
3B82 F1

SSB (v3): HDMI: Supply

B11C HDMI: SUPPLY

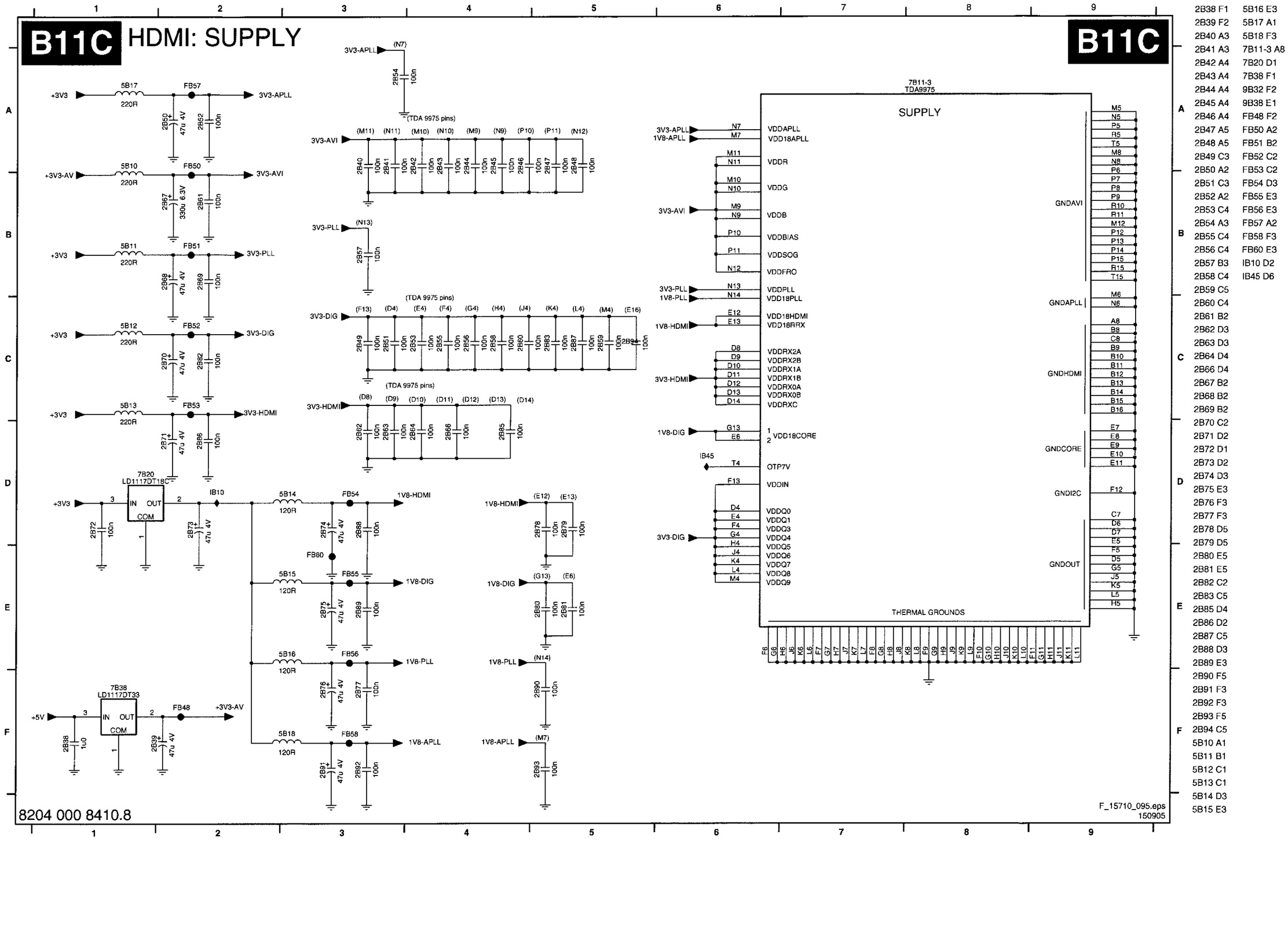

2B38 F1 5B16 E3
2B39 F2 5B17 A1
2B40 A3 5B18 F3
2B41 A3 7B11-3 A8
2B42 A4 7B20 D1
2B43 A4 7B38 F1
2B44 A4 9B32 F2
2B45 A4 9B38 E1
2B46 A4 FB48 F2
2B47 A5 FB50 A2
2B48 A5 FB51 B2
2B49 C3 FB52 C2
2B50 A2 FB53 C2
2B51 C3 FB54 D3
2B52 A2 FB55 E3
2B53 C4 FB56 E3
2B54 A3 FB57 A2
2B55 C4 FB58 F3
2B56 C4 FB60 E3
2B57 B3 IB10 D2
2B58 C4 IB45 D6
2B59 C5
2B60 C4
2B61 B2
2B62 D3
2B63 D3
2B64 D4
2B66 D4
2B67 B2
2B68 B2
2B69 B2
2B70 C2
2B71 D2
2B72 D1
2B73 D2
2B74 D3
2B75 E3
2B76 F3
2B77 F3
2B78 D5
2B79 D5
2B80 E5
2B81 E5
2B82 C2
2B83 C5
2B85 D4
2B86 D2
2B87 C5
2B88 D3
2B89 E3
2B90 F5
2B91 F3
2B92 F3
2B93 F5
2B94 C5
5B10 A1
5B11 B1
5B12 C1
5B13 C1
5B14 D3
5B15 E3

SSB (v3): Connections A

1M01 G5	1M62 G6	2M07 E9	2M16 E2	2M31 E10	2M66 E13	2M74 D14	2M83 E3	2M97 E1	3M08 D2	3M32 D6	3M42 C5	3M56 C10	5M02 E13	5M10 D11	5M19 E13	5M27 D2	7M01-2 C6	9M03 C14	FM04 F3	FM12 F12	FM20 F11	FM28 F7	FM37 F14	FM45 F3	IM01 B5	IM19 B6	IM28 B7	IM37 C10
1M03 G7	2M00 E12	2M08 E8	2M18 E11	2M47 E2	2M67 E14	2M75 D14	2M85 E9	2M98 E1	3M20 D12	3M34 D9	3M43 C4	3M57 C9	5M03 E14	5M11 D10	5M20 E12	5M28 E15	7M02 C5	9M04 C15	FM05 F2	FM13 F12	FM21 F8	FM29 F7	FM38 F14	FM50 G13	IM02 C5	IM20 C6	IM29 B9	IM40 C15
1M20 G2	2M01 E12	2M10 E12	2M19 E11	2M49 E8	2M68 E14	2M76 D14	2M90 D5	3M01 D3	3M21 D12	3M35 D7	3M44 D9	3M58 C10	5M04 E14	5M12 D11	5M21 E12	5M29 E15	7M05 D7	9M07 D7	FM06 F2	FM14 F12	FM22 F2	FM30 F8	FM39 F7	FM55 G6	IM03 D7	IM21 B2	IM30 B7	IM41 F1
1M36 G12	2M02 E12	2M11 E13	2M20 E2	2M50 E4	2M69 E14	2M77 E15	2M92 D9	3M02 D3	3M24 D1	3M36 D9	3M45 D5	3M60 D1	5M05 E14	5M13 D11	5M22 D9	5M30 F6	7M06 D7	9M06 D6	FM07 F9	FM15 F12	FM23 G13	FM32 F9	FM40 F7	FM62 F1	IM04 C7	IM22 B2	IM31 B11	IM42 D3
1M46 G13	2M03 E6	2M12 E13	2M21 E2	2M51 E2	2M70 E15	2M78 D15	2M93 D10	3M03 D4	3M25 D2	3M37 C7	3M47 D6	3M61 D1	5M06 E14	5M14 D9	5M23 D3	5M31 F5	7M11 C10	9M08 F11	FM08 F12	FM16 F13	FM24 G13	FM33 G4	FM41 F9	FM64 F3	IM05 C9	IM23 B2	IM32 B12	IM44 C15
1M49 G1	2M04 E7	2M13 E12	2M22 D11	2M58 E2	2M71 E15	2M80 D5	2M94 F6	3M04 D8	3M27 D2	3M38 C7	3M50 D4	3M62 D1	5M07 E15	5M15 D10	5M24 D3	6M01-1 E4	7M12 D6	FM01 F2	FM09 F12	FM17 F10	FM25 G13	FM34 F8	FM42 F3	FM65 F9	IM06 C10	IM24 B2	IM33 B12	IM45 F2
1M51 G1	2M05 E8	2M14 E1	2M29 E10	2M62 E11	2M72 D13	2M81 F4	2M95 C10	3M05 D2	3M30 D6	3M40 B5	3M54 C5	5M00 E13	5M08 E15	5M17 D13	5M25 D3	6M01-2 E4	9M01 C6	FM02 F2	FM10 F10	FM18 F11	FM26 F14	FM35 G13	FM43 F1	FM66 F1	IM08 E6	IM25 B3	IM34 B12	
1M52 G10	2M06 E7	2M15 E1	2M30 E9	2M65 E13	2M73 D13	2M82 F4	2M96 E1	3M07 D3	3M31 D7	3M41 B6	3M55 C9	5M01 E13	5M09 D8	5M18 D12	5M26 D2	7M01-1 B6	9M02 C14	FM03 F4	FM11 F14	FM19 F11	FM27 F14	FM36 G12	FM44 F3	FM67 F1	IM18 C4	IM26 B4	IM36 D9	

B16A CONNECTIONS A

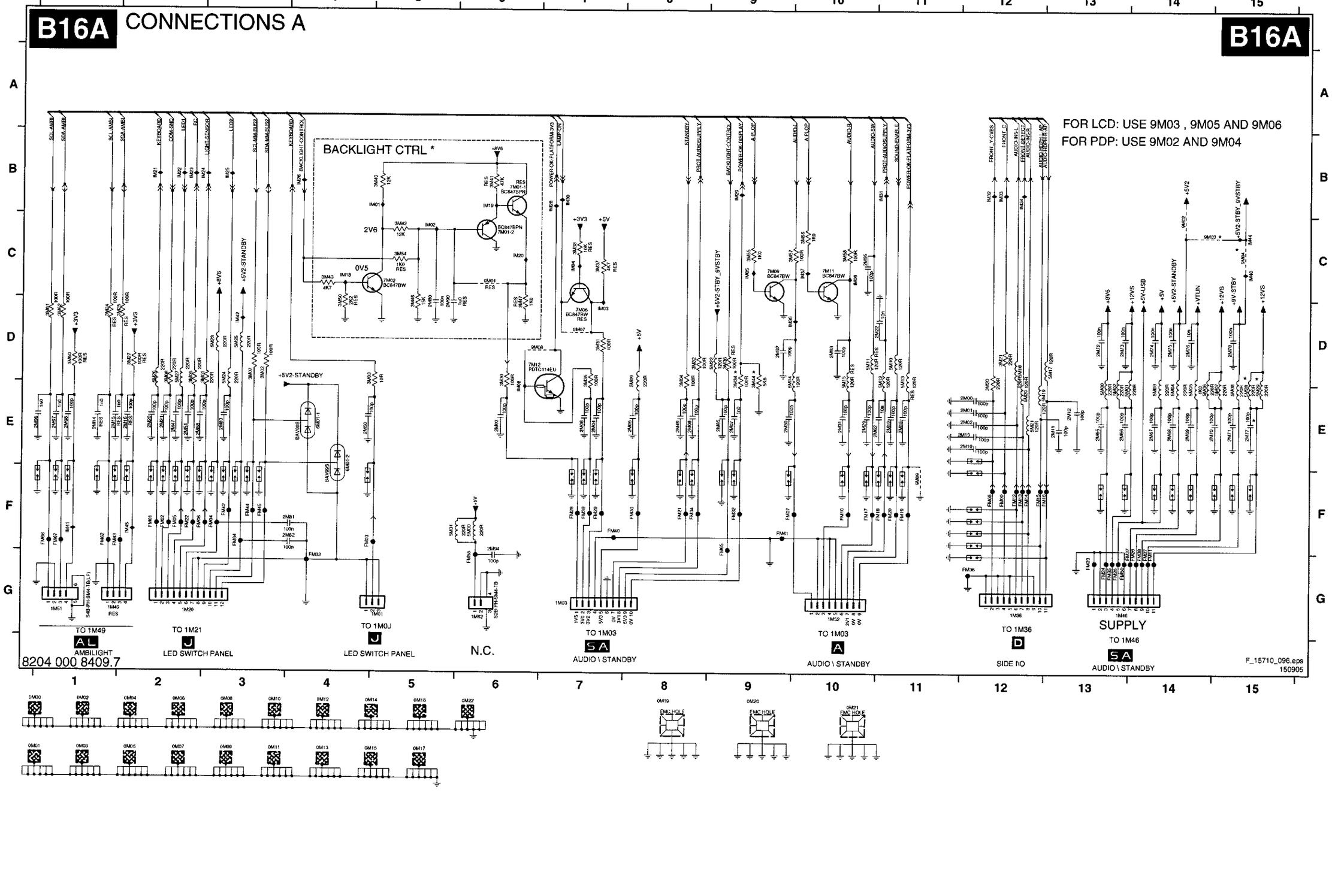

SSB (v3): Connections B

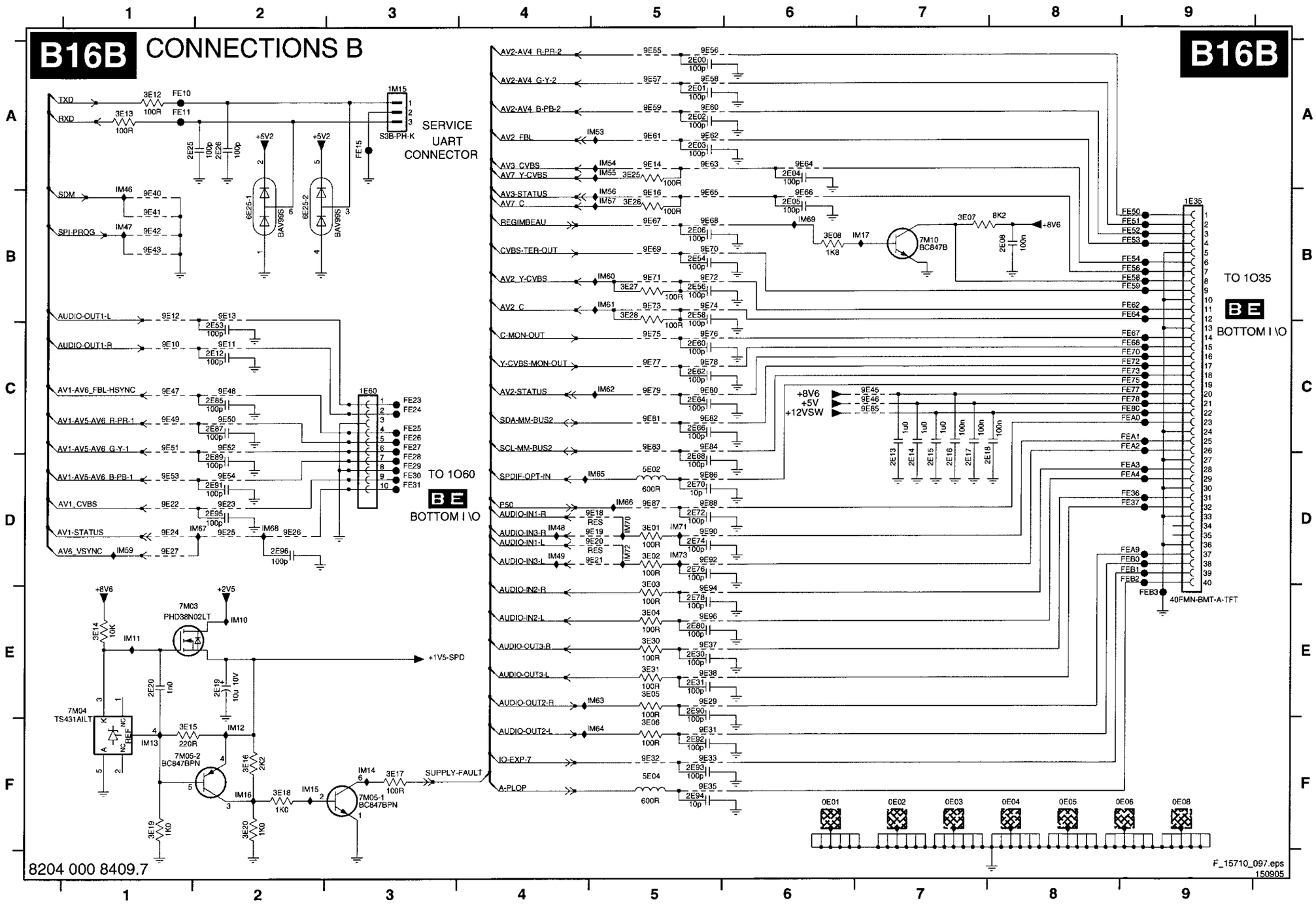

0E01 F6	7M05-1 F3	FE27 C3
0E02 F7	7M05-2 F1	FE28 D3
0E03 F7	7M10 B7	FE29 D3
0E04 F8	9E10 C1	FE30 D3
0E05 F8	9E11 C2	FE31 D3
0E06 F9	9E12 B1	FE36 D9
0E08 F9	9E13 B2	FE37 D9
1E35 B9	9E14 A5	FE50 B9
1E60 C3	9E16 B5	FE51 B9
1M15 A3	9E18 D5	FE52 B9
2E00 A5	9E19 D5	FE53 B9
2E01 A5	9E20 D5	FE54 B9
2E02 A5	9E21 D5	FE56 B9
2E03 A5	9E22 D1	FE58 B9
2E04 A6	9E23 D2	FE59 B9
2E05 B6	9E24 D1	FE62 B9
2E06 B5	9E25 D2	FE64 B9
2E08 B8	9E26 D2	FE67 C9
2E12 C2	9E27 D1	FE68 C9
2E13 D7	9E29 E5	FE70 C9
2E14 D7	9E31 F5	FE72 C9
2E15 D7	9E32 F5	FE73 C9
2E16 D7	9E33 F5	FE75 C9
2E17 D7	9E35 F5	FE77 C9
2E18 D8	9E37 E5	FE78 C9
2E19 E2	9E38 E5	FE80 C9
2E20 E1	9E40 B1	FEA0 C9
2E25 A1	9E41 B1	FEA1 C9
2E26 A2	9E42 B1	FEA2 C9
2E30 E5	9E43 B1	FEA3 D9
2E31 E5	9E45 C7	FEA4 D9
2E53 C2	9E46 C7	FEA9 D9
2E54 B5	9E47 C1	FEB0 D9
2E56 B5	9E48 C2	FEB1 D9
2E58 B5	9E49 C1	FEB2 D9
2E60 C5	9E50 C2	FEB3 E9
2E62 C5	9E51 C1	IM10 E2
2E64 C5	9E52 C2	IM11 E1
2E66 C5	9E53 D1	IM12 F2
2E68 D5	9E54 D2	IM13 F1
2E70 D5	9E55 A5	IM14 F3
2E72 D5	9E56 A5	IM15 F2
2E74 D5	9E57 A5	IM16 F2
2E76 D5	9E58 A5	IM17 B7
2E78 E5	9E59 A5	IM46 A1
2E80 E5	9E60 A5	IM47 B1
2E85 C2	9E61 A5	IM48 D4
2E87 C2	9E62 A5	IM49 D4
2E89 D2	9E63 A5	IM53 A5
2E90 E5	9E64 A6	IM54 A5
2E91 D2	9E65 B5	IM55 A5
2E92 F5	9E66 B6	IM56 B5
2E93 F5	9E67 B5	IM57 B5
2E94 F5	9E68 B5	IM59 D1
2E95 D2	9E69 B5	IM60 B5
2E96 D2	9E70 B5	IM61 B5
3E01 D5	9E71 B5	IM62 C5
3E02 D5	9E72 B5	IM63 E5
3E03 E5	9E73 B5	IM64 F5
3E04 E5	9E74 B5	IM65 D5
3E05 E5	9E75 C5	IM66 D5
3E06 F5	9E76 C5	IM67 D2
3E07 B7	9E77 C5	IM68 D2
3E08 B6	9E78 C5	IM69 B6
3E12 A1	9E79 C5	IM70 D5
3E13 A1	9E80 C5	IM71 D5
3E14 E1	9E81 C5	IM72 D5
3E15 F1	9E82 C5	IM73 D5
3E16 F2	9E83 C5	
3E17 F3	9E84 C5	
3E18 F2	9E85 C7	
3E19 F1	9E86 D5	
3E20 F2	9E87 D5	
3E25 A5	9E88 D5	
3E26 B5	9E90 D5	
3E27 B5	9E92 D5	
3E28 B5	9E94 E5	
3E30 E5	9E96 E5	
3E31 E5	FE10 A1	
5E02 D5	FE11 A1	
5E04 F5	FE15 A3	
6E25-1 B2	FE23 C3	
6E25-2 B2	FE24 C3	
7M03 E1	FE25 C3	
7M04 E1	FE26 C3	

SSB: Signal Lines Overview (v3) Part 1

netname	schematic
+12V-DC	B01
+12VS	B01
+12VS	B08a
+12VS	B08c
+12VS	B16a
+12VSW	B01
+12VSW	B04b
+12VSW	B04i
+12VSW	B09b
+12VSW	B09c
+12VSW	B14b
+12VSW	B16b
+12VSW-AIO	B14b
+1V2	B01
+1V2	B05e
+1V2	B07d
+1V2	B08a
+1V2-STANDBY	B05e
+1V2-STANDBY	B08a
+1V5	B09a
+1V5M	B09a
+1V5PLL	B09a
+1V5-SPD	B06c
+1V5-SPD	B16b
+2V5	B01
+2V5	B06b
+2V5	B06c
+2V5	B07d
+2V5	B08a
+2V5	B16b
+2V5D	B01
+2V5D	B07b
+2V5D-DDR	B07b
+2V5-DDR	B06b
+2V5-DDR	B06c
+2V5-DDRPNX	B05d
+2V5-DDRPNX	B05f
+2V5M	B09a
+2V5-N	B05c
+2V5-N	B06a
+2V5-S	B05c
+2V5-S	B05f
+2V5-SPDDR	B06b
+2V5-TUN	B05c
+2V5-TUN	B06a
+2V5-TUN	B06c
+2V5-VIPER	B07b
+2V5-VIPER	B07c
+2V5-VIPER	B07d
+2V8	B01
+3V3	B01
+3V3	B05a
+3V3	B05e
+3V3	B06c
+3V3	B07a
+3V3	B07c
+3V3	B07d
+3V3	B07e
+3V3	B08a
+3V3	B08b
+3V3	B09a
+3V3	B09b
+3V3	B09c
+3V3	B11c
+3V3	B13a
+3V3	B14b
+3V3	B15
+3V3	B16a
+3V3-AIO	B14b
+3V3-AIO	B14c
+3V3-AV	B11c
+3V3-ET-ANA	B15
+3V3-ET-DIG	B15
+3V3M	B09a
+3V3M	B09d
+3V3-SD	B09a
+3V3-SD	B09d
+3V3-SPIDER	B06a
+3V3-SPIDER	B06c
+3V3-SPIDER	B06d
+3V3-STANDBY	B05e
+3V3-STANDBY	B08a
+3V3-STANDBY	B14b
+5V	B01
+5V	B07a
+5V	B08a
+5V	B11c
+5V	B14b
+5V	B16a
+5V	B16b
+5V2	B01
+5V2	B05e
+5V2	B08a
+5V2	B08c
+5V2	B14a
+5V2	B16a
+5V2	B16b
+5V2S	B04b
+5V2S	B04f
+5V2S	B04i
+5V2S	B09b
+5V2-STANDBY	B05e
+5V2-STANDBY	B16a

+5V2-STBY_9VSTBY	B16a
+5V-AIO	B14b
+5V-AIO	B14c
+5VaM	B04c
+5VaS	B04g
+5V-AUD	B04b
+5V-AUD	B04i
+5VbM	B04a
+5VbM	B04c
+5VbMAIN	B04a
+5VbS	B04g
+5VDISP	B09b
+5VDISP	B09c
+5VMPIF-MAIN	B04a
+5VMPIF-MAIN	B04b
+5VMPIF-MAIN	B04c
+5VMPIF-SUB	B04e
+5VMPIF-SUB	B04f
+5VMPIF-SUB	B04g
+5VTUN	B02
+5VTUN	B03
+5VTUNMAIN	B02
+5VTUNSUB	B03
+5V-USB	B07e
+5V-USB	B16a
+8V6	B02
+8V6	B04b
+8V6	B04f
+8V6	B08a
+8V6	B08b
+8V6	B11a
+8V6	B12a
+8V6	B14b
+8V6	B16a
+8V6	B16b
+8VaM	B04c
+8VaS	B04g
+8V-AUD	B04b
+8VMPIF-MAIN	B04b
+8VMPIF-MAIN	B04c
+8VMPIF-SUB	B04f
+8VMPIF-SUB	B04g
+9V-STBY	B16a
+VTUN	B01
+VTUN	B02
+VTUN	B16a
+VTUN1	B02
+VTUN2	B02
+VTUN2	B03
1V8-APLL	B11c
1V8-DIG	B11c
1V8-HDMI	B11c
1V8-PLL	B11c
2NDSIFEXTM	B04c
2NDSIFEXTS	B04g
3V3-APLL	B11c
3V3-AVI	B11c
3V3-DIG	B11a
3V3-DIG	B11b
3V3-DIG	B11c
3V3-HDMI	B11b
3V3-HDMI	B11c
3V3-PLL	B11c
A(0)	B06b
A(1)	B06b
A(10)	B06b
A(11)	B06b
A(2)	B06b
A(3)	B06b
A(4)	B06b
A(5)	B06b
A(6)	B06b
A(7)	B06b
A(8)	B06b
A(9)	B06b
A0	B09d
A1	B09d
A10	B09d
A11	B09d
A2	B09d
A3	B09d
A4	B09d
A5	B09d
A6	B09d
A7	B09d
A8	B09d
A9	B09d
ADAC1	B04i
ADAC1	B05a
ADAC2	B04i
ADAC2	B05a
ADAC4	B04i
ADAC4	B05a
ADAC7	B04i
ADAC7	B05a
ADAC8	B04i
ADAC8	B05a
AGC1	B03
AGC1	B04g
AGC2	B02
AGC2	B04c
AIN-5V	B11a
ALE	B05e
ALE	B05g

A-PLOP	B07a
A-PLOP	B08c
A-PLOP	B12a
A-PLOP	B14a
A-PLOP	B16a
A-PLOP	B16b
AP-SCART1-OUT-L	B12a
AP-SCART1-OUT-R	B12a
ARX0-	B11a
ARX0+	B11a
ARX1-	B11a
ARX1+	B11a
ARX2-	B11a
ARX2+	B11a
ARXC-	B11a
ARXC+	B11a
ARX-DDC-SCL	B11a
ARX-DDC-SDA	B11a
ARX-HOTPLUG	B11a
AUDIO-CENTER-IN	B04d
AUDIO-CENTER-IN	B04h
AUDIO-HDPH-L	B04i
AUDIO-HDPH-L	B14a
AUDIO-HDPH-L-AP	B14a
AUDIO-HDPH-L-AP	B16a
AUDIO-HDPH-R	B04i
AUDIO-HDPH-R	B14a
AUDIO-HDPH-R-AP	B14a
AUDIO-HDPH-R-AP	B16a
AUDIO-IN1-L	B04d
AUDIO-IN1-L	B04h
AUDIO-IN1-L	B12a
AUDIO-IN1-L	B14b
AUDIO-IN1-L	B16b
AUDIO-IN1-R	B04d
AUDIO-IN1-R	B04h
AUDIO-IN1-R	B12a
AUDIO-IN1-R	B16b
AUDIO-IN2-L	B04d
AUDIO-IN2-L	B04h
AUDIO-IN2-L	B16b
AUDIO-IN2-R	B04d
AUDIO-IN2-R	B04h
AUDIO-IN2-R	B16b
AUDIO-IN3-L	B04d
AUDIO-IN3-L	B04h
AUDIO-IN3-L	B16b
AUDIO-IN3-R	B04d
AUDIO-IN3-R	B04h
AUDIO-IN3-R	B16b
AUDIO-IN4-L	B04d
AUDIO-IN4-L	B04h
AUDIO-IN4-L	B14b
AUDIO-IN4-R	B04d
AUDIO-IN4-R	B04h
AUDIO-IN4-R	B14b
AUDIO-IN5-L	B04d
AUDIO-IN5-L	B04h
AUDIO-IN5-L	B16a
AUDIO-IN5-R	B04d
AUDIO-IN5-R	B04h
AUDIO-IN5-R	B16a
AUDIO-L	B04i
AUDIO-L	B04a
AUDIO-L	B16a
AUDIO-OUT1-L	B04d
AUDIO-OUT1-L	B12a
AUDIO-OUT1-L	B16b
AUDIO-OUT1-R	B04d
AUDIO-OUT1-R	B12a
AUDIO-OUT1-R	B16b
AUDIO-OUT2-L	B04h
AUDIO-OUT2-L	B16b
AUDIO-OUT2-M-L	B04d
AUDIO-OUT2-M-L	B04h
AUDIO-OUT2-M-R	B04d
AUDIO-OUT2-M-R	B04h
AUDIO-OUT2-R	B04h
AUDIO-OUT2-R	B16b
AUDIO-OUT3-L	B04d
AUDIO-OUT3-L	B16b
AUDIO-OUT3-R	B04d
AUDIO-OUT3-R	B16b
AUDIO-R	B04i
AUDIO-R	B16a
AUDIO-SW	B04i
AUDIO-SW	B16a
AV1_CVBS	B04a
AV1_CVBS	B04e
AV1_CVBS	B12a
AV1_CVBS	B16b
AV1-AV5-AV6_B-PB	B04a
AV1-AV5-AV6_B-PB	B04e
AV1-AV5-AV6_B-PB	B11b
AV1-AV5-AV6_B-PB	B12a
AV1-AV5-AV6_B-PB-1	B12a
AV1-AV5-AV6_B-PB-1	B16b
AV1-AV5-AV6_G-Y	B04a
AV1-AV5-AV6_G-Y	B04e
AV1-AV5-AV6_G-Y	B11b
AV1-AV5-AV6_G-Y	B12a
AV1-AV5-AV6_G-Y-1	B12a
AV1-AV5-AV6_G-Y-1	B16b
AV1-AV5-AV6_R-PR	B04a
AV1-AV5-AV6_R-PR	B04e
AV1-AV5-AV6_R-PR	B11b

AV1-AV5-AV6_R-PR	B12a
AV1-AV5-AV6_R-PR-1	B12a
AV1-AV5-AV6_R-PR-1	B16b
AV1-AV6_FBL-HSYNC	B05a
AV1-AV6_FBL-HSYNC	B11b
AV1-AV6_FBL-HSYNC	B12a
AV1-AV6_FBL-HSYNC	B16b
AV1-STATUS	B05e
AV1-STATUS	B12a
AV1-STATUS	B16b
AV2_C	B04a
AV2_C	B04e
AV2_C	B16b
AV2_FBL	B05a
AV2_FBL	B16b
AV2_Y-CVBS	B04a
AV2_Y-CVBS	B04e
AV2_Y-CVBS	B16b
AV2-AV4_B-PB	B04a
AV2-AV4_B-PB	B04e
AV2-AV4_B-PB	B11b
AV2-AV4_B-PB	B12a
AV2-AV4_B-PB-2	B12a
AV2-AV4_B-PB-2	B16b
AV2-AV4_G-Y	B04a
AV2-AV4_G-Y	B04e
AV2-AV4_G-Y	B11b
AV2-AV4_G-Y	B12a
AV2-AV4_G-Y-2	B12a
AV2-AV4_G-Y-2	B16b
AV2-AV4_R-PR	B04a
AV2-AV4_R-PR	B04e
AV2-AV4_R-PR	B11b
AV2-AV4_R-PR	B12a
AV2-AV4_R-PR-2	B12a
AV2-AV4_R-PR-2	B16b
AV2-STATUS	B05e
AV2-STATUS	B16b
AV3_CVBS	B04a
AV3_CVBS	B04e
AV3_CVBS	B16b
AV3-STATUS	B05e
AV3-STATUS	B16b
AV6_VSYNC	B05a
AV6_VSYNC	B11b
AV6_VSYNC	B16b
AV7_C	B04a
AV7_C	B04e
AV7_C	B16b
AV7_Y-CVBS	B04a
AV7_Y-CVBS	B04e
AV7_Y-CVBS	B16b
B0e	B09d
B0o	B09d
B1e	B09d
B1o	B09d
B2e	B09d
B2o	B09d
B3e	B09d
B3o	B09d
B4e	B09d
B4o	B09d
B5e	B09d
B5o	B09d
B6e	B09d
B6o	B09d
B7e	B09d
B7o	B09d
BA0	B06b
BA1	B06b
BACKLIGHT-CONTROL	B05e
BACKLIGHT-CONTROL	B07c
BACKLIGHT-CONTROL	B16a
BIN-5V	B11a
BRX0-	B11a
BRX0+	B11a
BRX1-	B11a
BRX1+	B11a
BRX2-	B11a
BRX2+	B11a
BRXC-	B11a
BRXC+	B11a
BRX-DDC-SCL	B11a
BRX-DDC-SDA	B11a
BRX-HOTPLUG	B11a
CAS	B06b
CAS	B09d
CK	B06b
CKE	B06b
CKN	B06b
Clk	B09d
CLK-MPIF	B04b
CLK-MPIF	B04f
CLK-MPIF	B05a
CLK-OUT	B09d
C-MON-OUT	B07c
C-MON-OUT	B16b
COM-SND	B05g
COM-SND	B16a
CS	B06b
CTRL1-MOP	B09c
CTRL1-MOP	B09d
CTRL1-STBY	B05e
CTRL1-STBY	B09c

CTRL1-VIPER	B07c
CTRL1-VIPER	B09b
CTRL1-VIPER	B09c
CTRL2-MOP	B09c
CTRL2-MOP	B09d
CTRL2-VIPER	B07c
CTRL2-VIPER	B09c
CTRL3-STBY	B05e
CTRL4-MOP	B09c
CTRL4-MOP	B09d
CTRL4-STBY	B05e
CTRL4-VIPER	B07a
CTRL4-VIPER	B09c
CTRL4-VIPER	B09d
CTRL-DISP1	B09c
CTRL-DISP2	B09c
CVBSOUTIF-MAIN	B04a
CVBSOUTIF-MAIN	B04c
CVBSOUTIF-MAIN	B04e
CVBSOUTIF-SUB	B04a
CVBSOUTIF-SUB	B04e
CVBSOUTIF-SUB	B04g
CVBS-OUT-TER-MAIN	B04a
CVBS-OUT-TER-MAIN	B04c
CVBS-TER-OUT	B04a
CVBS-TER-OUT	B12a
CVBS-TER-OUT	B16b
D1	B09d
D10	B09d
D11	B09d
D12	B09d
D13	B09d
D14	B09d
D15	B09d
D16	B09d
D2	B09d
D3	B09d
D4	B09d
D5	B09d
D6	B09d
D7	B09d
D8	B09d
D9	B09d
DAC-CVBS	B07c
DAC-CVBS	B08b
DATA1N-MAIN	B04a
DATA1N-MAIN	B05a
DATA1N-SUB	B04e
DATA1N-SUB	B05a
DATA1P-MAIN	B04a
DATA1P-MAIN	B05a
DATA1P-SUB	B04e
DATA1P-SUB	B05a
DATA2N-MAIN	B04a
DATA2N-MAIN	B05a
DATA2N-SUB	B04e
DATA2N-SUB	B05a
DATA2P-MAIN	B04a
DATA2P-MAIN	B05a
DATA2P-SUB	B04e
DATA2P-SUB	B05a
DATA3N-MAIN	B04a
DATA3N-MAIN	B05a
DATA3N-SUB	B04e
DATA3N-SUB	B05a
DATA3P-MAIN	B04a
DATA3P-MAIN	B05a
DATA3P-SUB	B04e
DATA3P-SUB	B05a
DE	B09d
DEBUG-BREAK	B05e
DEBUG-BREAK	B07a
DETECT-12VSW	B05g
DETECT-12VSW	B08a
DETECT-1V2	B05g
DETECT-1V2	B08a
DETECT-2V5	B05g
DETECT-2V5	B08a
DETECT-3V3	B05g
DETECT-3V3	B08a
DETECT-5V	B05g
DETECT-5V	B08a
DETECT-8V6	B05g
DETECT-8V6	B08a
DQ(0)	B06b
DQ(1)	B06b
DQ(10)	B06b
DQ(11)	B06b
DQ(12)	B06b
DQ(13)	B06b
DQ(14)	B06b
DQ(15)	B06b
DQ(2)	B06b
DQ(3)	B06b
DQ(4)	B06b
DQ(5)	B06b
DQ(6)	B06b
DQ(7)	B06b
DQ(8)	B06b
DQ(9)	B06b
DQM	B09d
DSNDL1	B04d
DSNDL1	B05a
DSNDL2	B04d

DSNDL2	B05a
DSNDR1	B04d
DSNDR1	B05a
DSNDR2	B04d
DSNDR2	B05a
DV1F-CLK	B05b
DV1F-CLK	B07c
DV1F-DATA0_SOP	B05b
DV1F-DATA0_SOP	B07c
DV1F-DATA1_ERR	B05b
DV1F-DATA1_ERR	B07c
DV1F-DATA2_0	B05b
DV1F-DATA2_0	B07c
DV1F-DATA3_1	B05b
DV1F-DATA3_1	B07c
DV1F-DATA4_2	B05b
DV1F-DATA4_2	B07c
DV1F-DATA5_3	B05b
DV1F-DATA5_3	B07c
DV1F-DATA6_4	B05b
DV1F-DATA6_4	B07c
DV1F-DATA7_5	B05b
DV1F-DATA7_5	B07c
DV1F-DATA8_6	B05b
DV1F-DATA8_6	B07c
DV1F-DATA9_7	B05b
DV1F-DATA9_7	B07c
DV1F-VALID	B05b
DV1F-VALID	B07c
DV2A-CLK	B05b
DV2A-CLK	B07c
DV2A-DATA0_SOP	B05b
DV2A-DATA0_SOP	B07c
DV2A-DATA1_ERR	B05b
DV2A-DATA1_ERR	B07c
DV2A-DATA2_0	B05b
DV2A-DATA2_0	B07c
DV2A-DATA3_1	B05b
DV2A-DATA3_1	B07c
DV2A-DATA4_2	B05b
DV2A-DATA4_2	B07c
DV2A-DATA5_3	B05b
DV2A-DATA5_3	B07c
DV2A-DATA6_4	B05b
DV2A-DATA6_4	B07c
DV2A-DATA7_5	B05b
DV2A-DATA7_5	B07c
DV2A-DATA8_6	B05b
DV2A-DATA8_6	B07c
DV2A-DATA9_7	B05b
DV2A-DATA9_7	B07c
DV2A-VALID	B05b
DV2A-VALID	B07c
DV3F-CLK	B05b
DV3F-CLK	B07c
DV3F-DATA0_SOP	B05b
DV3F-DATA0_SOP	B07c
DV3F-DATA1_ERR	B05b
DV3F-DATA1_ERR	B07c
DV3F-DATA2_0	B05b
DV3F-DATA2_0	B07c
DV3F-DATA3_1	B05b
DV3F-DATA3_1	B07c
DV3F-DATA4_2	B05b
DV3F-DATA4_2	B07c
DV3F-DATA5_3	B05b
DV3F-DATA5_3	B07c
DV3F-DATA6_4	B05b
DV3F-DATA6_4	B07c
DV3F-DATA7_5	B05b
DV3F-DATA7_5	B07c
DV3F-DATA8_6	B05b
DV3F-DATA8_6	B07c
DV3F-DATA9_7	B05b
DV3F-DATA9_7	B07c
DV3F-VALID	B05b
DV3F-VALID	B07c
DV4-CLK	B05b
DV4-CLK	B11b
DV4-DATA0_SOP	B05b
DV4-DATA0_SOP	B11b
DV4-DATA1_ERR	B05b
DV4-DATA1_ERR	B11b
DV4-DATA2_0	B05b
DV4-DATA2_0	B11b
DV4-DATA3_1	B05b
DV4-DATA3_1	B11b
DV4-DATA4_2	B05b
DV4-DATA4_2	B11b
DV4-DATA5_3	B05b
DV4-DATA5_3	B11b
DV4-DATA6_4	B05b
DV4-DATA6_4	B11b
DV4-DATA7_5	B05b
DV4-DATA7_5	B11b
DV4-DATA8_6	B05b
DV4-DATA8_6	B11b
DV4-DATA9_7	B05b
DV4-DATA9_7	B11b
DV4-VALID	B05b
DV4-VALID	B11b
DV5-DATA0_SOP	B05b
DV5-DATA0_SOP	B11b
DV5-DATA1_ERR	B05b

DV5-DATA1_ERR	B11b
DV5-DATA2_0	B05b
DV5-DATA2_0	B11b
DV5-DATA3_1	B05b
DV5-DATA3_1	B11b
DV5-DATA4_2	B05b
DV5-DATA4_2	B11b
DV5-DATA5_3	B05b
DV5-DATA5_3	B11b
DV5-DATA6_4	B05b
DV5-DATA6_4	B11b
DV5-DATA7_5	B05b
DV5-DATA7_5	B11b
DV5-DATA8_6	B05b
DV5-DATA8_6	B11b
DV5-DATA9_7	B05b
DV5-DATA9_7	B11b
DV-BOUT-0	B07c
DV-BOUT-0	B09d
DV-BOUT-1	B07c
DV-BOUT-1	B09d
DV-BOUT-2	B07c
DV-BOUT-2	B09d
DV-BOUT-3	B07c
DV-BOUT-3	B09d
DV-BOUT-4	B07c
DV-BOUT-4	B09d
DV-BOUT-5	B07c
DV-BOUT-5	B09d
DV-BOUT-6	B07c
DV-BOUT-6	B09d
DV-BOUT-7	B07c
DV-BOUT-7	B09d
DV-BOUT-8	B07c
DV-BOUT-8	B09d
DV-BOUT-9	B07c
DV-BOUT-9	B09d
DV-CLKIN	B07c
DV-CLKIN	B09a
DV-FREF	B05b
DV-FREF	B11b
DV-GOUT-0	B07c
DV-GOUT-0	B09d
DV-GOUT-1	B07c
DV-GOUT-1	B09d
DV-GOUT-2	B07c
DV-GOUT-2	B09d
DV-GOUT-3	B07c
DV-GOUT-3	B09d
DV-GOUT-4	B07c
DV-GOUT-4	B09d
DV-GOUT-5	B07c
DV-GOUT-5	B09d
DV-GOUT-6	B07c
DV-GOUT-6	B09d
DV-GOUT-7	B07c
DV-GOUT-7	B09d
DV-GOUT-8	B07c
DV-GOUT-8	B09d
DV-GOUT-9	B07c
DV-GOUT-9	B09d
DV-HREF	B05b
DV-HREF	B11b
DVI-B-Pb	B11a
DVI-B-Pb	B11b
DVI-B-Pb3	B11a
DVI-G-Y	B11a
DVI-G-Y	B11b
DVI-G-Y3	B11a
DVI-HSYNC	B11a
DVI-HSYNC	B11b
DVI-HSYNC3	B11a
DVI-R-Pr	B11a
DVI-R-Pr	B11b
DVI-R-Pr3	B11a
DVI-VSYNC	B11a
DVI-VSYNC	B11b
DVI-VSYNC3	B11a
DV-OUT-DE	B07c
DV-OUT-DE	B09d
DV-OUT-FFIELD	B07c
DV-OUT-FFIELD	B09d
DV-OUT-HS	B07c
DV-OUT-HS	B09d
DV-OUT-VS	B07c
DV-OUT-VS	B09b
DV-OUT-VS	B09d
DV-ROUT-0	B07c
DV-ROUT-0	B09d
DV-ROUT-1	B07c
DV-ROUT-1	B09d
DV-ROUT-2	B07c
DV-ROUT-2	B09d
DV-ROUT-3	B07c
DV-ROUT-3	B09d
DV-ROUT-4	B07c
DV-ROUT-4	B09d
DV-ROUT-5	B07c
DV-ROUT-5	B09d
DV-ROUT-6	B07c
DV-ROUT-6	B09d
DV-ROUT-7	B07c
DV-ROUT-7	B09d
DV-ROUT-8	B07c

DV-ROUT-8	B09d
DV-ROUT-9	B07c
DV-ROUT-9	B09d
DV-VREF	B05b
DV-VREF	B11b
EA	B05e
EA	B05g
EJTAG-DETECT	B05e
EJTAG-DETECT	B07e
EJTAG-TCK	B07a
EJTAG-TCK	B07e
EJTAG-TDI	B07a
EJTAG-TDI	B07e
EJTAG-TDO	B07a
EJTAG-TDO	B07e
EJTAG-TMS	B07a
EJTAG-TMS	B07e
ENABLE-1V2	B01
ENABLE-1V2	B05g
ENABLE-2V5	B01
ENABLE-2V5	B05g
ENABLE-3V3	B01
ENABLE-3V3	B05g
ENABLE5V	B09b
ENABLE5V	B09c
FFe	B09d
FFo	B09d
FRONT_C	B04a
FRONT_C	B04e
FRONT_C	B16a
FRONT_Y-CVBS	B04a
FRONT_Y-CVBS	B04e
FRONT_Y-CVBS	B16a
FRONT-DETECT	B05e
FRONT-DETECT	B16a
G0e	B09d
G0o	B09d
G1e	B09d
G1o	B09d
G2e	B09d
G2o	B09d
G3e	B09d
G3o	B09d
G4e	B09d
G4o	B09d
G5e	B09d
G5o	B09d
G6e	B09d
G6o	B09d
G7e	B09d
G7o	B09d
GLINK-IR-OUT	B07a
GLINK-RXD	B07a
GLINK-RXD	B14b
GLINK-TXD	B07a
GLINK-TXD	B14b
GND1V2	B01
GND2V8	B01
GND3V3	B01
HDMI-COAST	B07a
HDMI-COAST	B11b
HPD-HIRATE	B07a
HPD-HIRATE	B11a
HPD-HIRATE	B11b
HSe	B09d
HSo	B09d
HV-PRM-MAIN	B04a
HV-PRM-MAIN	B05a
HV-PRM-SUB	B04e
HV-PRM-SUB	B05a
I2S-BCLK-AVIP	B05a
I2S-BCLK-AVIP	B07c
I2S-BCLK-MAIN	B05a
I2S-BCLK-MAIN	B07c
I2S-BCLK-SUB	B05a
I2S-BCLK-SUB	B07c
I2S-MAIN-D	B05a
I2S-MAIN-D	B07c
I2S-MAIN-ND	B05a
I2S-MAIN-ND	B07c
I2S-MCH-CSW	B05a
I2S-MCH-CSW	B07c
I2S-MCH-LR	B05a
I2S-MCH-LR	B07c
I2S-MCH-SLR	B05a
I2S-MCH-SLR	B07c
I2S-SUB-D	B05a
I2S-SUB-D	B07c
I2S-SUB-ND	B05a
I2S-SUB-ND	B07c
I2S-WS-AVIP	B05a
I2S-WS-AVIP	B07c
I2S-WS-MAIN	B05a
I2S-WS-MAIN	B07c
I2S-WS-SUB	B05a
I2S-WS-SUB	B07c
IF-TER1	B03
IF-TER1	B04g
IF-TER2	B02
IF-TER2	B04c
IO-EXP-1	B05e
IO-EXP-1	B14b
IO-EXP-1	B14c
IO-EXP-2	B05e

IO-EXP-2	B14b
IO-EXP-2	B14c
IO-EXP-7	B16b
IRQ-AVIP	B05e
IRQ-AVIP	B07a
IRQ-AVIP-SUB	B05e
IRQ-AVIP-SUB	B07a
IRQ-ETHERNET	B07a
IRQ-ETHERNET	B15
IRQ-FE-MAIN	B07a
IRQ-FE-SUB	B07a
IRQ-HD1	B05e
IRQ-HD1	B07a
IRQ-HD2	B05e
IRQ-HD2	B07a
IRQ-HIRATE	B05e
IRQ-HIRATE	B07a
IRQ-HIRATE	B11b
IRQ-IEEE1394	B07a
IRQ-MAIN	B07a
IRQ-MPIF	B04b
IRQ-MPIF	B07a
IRQ-MPIF-SUB	B04f
IRQ-MPIF-SUB	B07a
IRQ-POD	B05e
IRQ-POD	B07a
IRQ-SPIDER	B06a
IRQ-SPIDER	B07a
IRQ-SUB	B07a
IRQ-USB20	B07a
IRQ-USB20	B13a
JTAG-TCK	B05e
JTAG-TCK	B06a
JTAG-TCK	B07a
JTAG-TCK	B07e
JTAG-TCK	B11b
JTAG-TD-CON-VIPER	B07a
JTAG-TD-CON-VIPER	B07e
JTAG-TD-HDMI-PNX2015	B05e
JTAG-TD-HDMI-PNX2015	B11b
JTAG-TD-MOP-SPIDER	B06a
JTAG-TD-MOP-SPIDER	B09c
JTAG-TMS	B05e
JTAG-TMS	B06a
JTAG-TMS	B07a
JTAG-TMS	B07e
JTAG-TMS	B11b
JTAG-TRST	B05e
JTAG-TRST	B06a
JTAG-TRST	B07a
JTAG-TRST	B07e
JTAG-TRST	B11b
KEYBOARD	B05e
KEYBOARD	B16a
LAMP-ON	B05g
LAMP-ON	B16a
LDQS	B06b
LED1	B05e
LED1	B16a
LED1-3V3	B05e
LED2	B05e
LED2	B16a
LED2-3V3	B05e
LIGHT-SENSOR	B05e
LIGHT-SENSOR	B16a
LVDS-3V3	B05f
LVDS-PLL-3V3	B05f
M135-CLK	B07a
M135-CLK	B11b
M27-CLK	B05a
M27-CLK	B07a
M27-HDMI	B05a
M27-HDMI	B11b
M27-MOP	B05a
M27-MOP	B09d
M27-PNX	B05a
M27-PNX	B05e
MM_A0	B07b
MM_A1	B07b
MM_A10	B07b
MM_A11	B07b
MM_A12	B07b
MM_A2	B07b
MM_A3	B07b
MM_A4	B07b
MM_A5	B07b
MM_A6	B07b
MM_A7	B07b
MM_A8	B07b
MM_A9	B07b
MM_BA0	B07b
MM_BA1	B07b
MM_CAS	B07b
MM_CKE	B07b
MM_CLK_N	B07b
MM_CLK_P	B07b

MM_CS0	B07b
MM_DATA_0	B07b
MM_DATA_1	B07b
MM_DATA_10	B07b
MM_DATA_11	B07b
MM_DATA_12	B07b
MM_DATA_13	B07b
MM_DATA_14	B07b
MM_DATA_15	B07b
MM_DATA_16	B07b
MM_DATA_17	B07b
MM_DATA_18	B07b
MM_DATA_19	B07b
MM_DATA_2	B07b
MM_DATA_20	B07b
MM_DATA_21	B07b
MM_DATA_22	B07b
MM_DATA_23	B07b
MM_DATA_24	B07b
MM_DATA_25	B07b
MM_DATA_26	B07b
MM_DATA_27	B07b
MM_DATA_28	B07b
MM_DATA_29	B07b
MM_DATA_3	B07b
MM_DATA_30	B07b
MM_DATA_31	B07b
MM_DATA_4	B07b
MM_DATA_5	B07b
MM_DATA_6	B07b
MM_DATA_7	B07b
MM_DATA_8	B07b
MM_DATA_9	B07b
MM_DQM_0	B07b
MM_DQM_1	B07b
MM_DQM_2	B07b
MM_DQM_3	B07b
MM_DQS0	B07b
MM_DQS1	B07b
MM_DQS2	B07b
MM_DQS3	B07b
MM_RAS	B07b
MM_WE	B07b
MP-BOUT-0	B05b
MP-BOUT-1	B05b
MP-BOUT-2	B05b
MP-BOUT-3	B05b
MP-BOUT-4	B05b
MP-BOUT-5	B05b
MP-BOUT-6	B05b
MP-BOUT-7	B05b
MP-BOUT-8	B05b
MP-BOUT-9	B05b
MP-CLKOUT	B05b
MP-GOUT-0	B05b
MP-GOUT-1	B05b
MP-GOUT-2	B05b
MP-GOUT-3	B05b
MP-GOUT-4	B05b
MP-GOUT-5	B05b
MP-GOUT-6	B05b
MP-GOUT-7	B05b
MP-GOUT-8	B05b
MP-GOUT-9	B05b
MP-OUT-DE	B05b
MP-OUT-FFIELD	B05b
MP-OUT-HS	B05b
MP-OUT-VS	B05b
MP-ROUT-0	B05b
MP-ROUT-1	B05b
MP-ROUT-2	B05b
MP-ROUT-3	B05b
MP-ROUT-4	B05b
MP-ROUT-5	B05b
MP-ROUT-6	B05b
MP-ROUT-7	B05b
MP-ROUT-8	B05b
MP-ROUT-9	B05b

F_15710_134.eps
220905

SSB: Signal Lines Overview (v3) Part 2

NAND-AD(0)	B08b	PCI-AD0	B13a	PCI-AD26	B07a	PCI-DEVSEL	B07a	PNX-MDATA-5	B05d	SCL-MM-BUS1	B09b	STROBE2N-MAIN	B04a	TUN-SPIDER-TX-DATA8	B05c	TXCLKo-	B09d
NAND-AD(1)	B08b	PCI-AD0	B13b	PCI-AD26	B08b	PCI-DEVSEL	B12b	PNX-MDATA-6	B05d	SCL-MM-BUS1	B09d	STROBE2N-MAIN	B05a	TUN-SPIDER-TX-DATA8	B06a	TXCLKo+	B09c
NAND-AD(10)	B08b	PCI-AD0	B15	PCI-AD26	B12b	PCI-DEVSEL	B13a	PNX-MDATA-7	B05d	SCL-MM-BUS1	B11b	STROBE2N-SUB	B04e	TUN-SPIDER-TX-DATA9	B05c	TXCLKo+	B09d
NAND-AD(11)	B08b	PCI-AD1	B07a	PCI-AD26	B13a	PCI-DEVSEL	B13b	PNX-MDATA-8	B05d	SCL-MM-BUS2	B08a	STROBE2N-SUB	B05a	TUN-SPIDER-TX-DATA9	B06a	TXCo-	B09c
NAND-AD(12)	B08b	PCI-AD1	B08b	PCI-AD26	B13b	PCI-DEVSEL	B15	PNX-MDATA-9	B05d	SCL-MM-BUS2	B14b	STROBE2P-MAIN	B04a	TUNS-REF	B05c	TXCo-	B09d
NAND-AD(13)	B08b	PCI-AD1	B12b	PCI-AD26	B15	PCI-FRAME	B07a	PNX-MDQM-0	B05d	SCL-MM-BUS2	B16a	STROBE2P-MAIN	B05a	TUN-VIPER-RX-BUSY	B05c	TXCo+	B09c
NAND-AD(14)	B08b	PCI-AD1	B13a	PCI-AD27	B07a	PCI-FRAME	B12b	PNX-MDQM-1	B05d	SCL-MM-BUS2	B16b	STROBE2P-SUB	B04e	TUN-VIPER-RX-BUSY	B07c	TXCo+	B09d
NAND-AD(15)	B08b	PCI-AD1	B13b	PCI-AD27	B08b	PCI-FRAME	B13a	PNX-MDQS-0	B05d	SCL-MOP	B09b	STROBE2P-SUB	B05a	TUN-VIPER-RX-CLKP	B05c	TXD	B08a
NAND-AD(2)	B08b	PCI-AD1	B15	PCI-AD27	B12b	PCI-FRAME	B13b	PNX-MDQS-1	B05d	SCL-MOP	B09d	STROBE3N-MAIN	B04a	TUN-VIPER-RX-CLKP	B07c	TXD	B14b
NAND-AD(3)	B08b	PCI-AD10	B07a	PCI-AD27	B13a	PCI-FRAME	B15	PNX-MRAS	B05d	SCL-TUN	B02	STROBE3N-MAIN	B05a	TUN-VIPER-RX-DATA0	B05c	TXD	B16b
NAND-AD(4)	B08b	PCI-AD10	B12b	PCI-AD27	B13b	PCI-GNT	B07a	PNX-MWE	B05d	SCL-TUN	B08a	STROBE3N-SUB	B04e	TUN-VIPER-RX-DATA0	B07c	TXDe-	B09c
NAND-AD(5)	B08b	PCI-AD10	B13a	PCI-AD27	B15	PCI-GNT	B12b	POD-MODE	B01	SCL-UP-SW	B05e	STROBE3N-SUB	B05a	TUN-VIPER-RX-DATA1	B05c	TXDe-	B09d
NAND-AD(6)	B08b	PCI-AD10	B13b	PCI-AD28	B07a	PCI-GNT	B13a	POD-MODE	B05e	SCL-UP-VIP	B05e	STROBE3P-MAIN	B04a	TUN-VIPER-RX-DATA1	B07c	TXDe+	B09c
NAND-AD(7)	B08b	PCI-AD10	B15	PCI-AD28	B08b	PCI-GNT	B13b	POD-MODE	B05g	SCL-UP-VIP	B07a	STROBE3P-MAIN	B05a	TUN-VIPER-RX-DATA10	B05c	TXDe+	B09d
NAND-AD(8)	B08b	PCI-AD11	B07a	PCI-AD28	B12b	PCI-GNT-A	B07a	POWERDOWN-1394	B07a	SCL-UP-VIP	B07e	STROBE3P-SUB	B04e	TUN-VIPER-RX-DATA10	B07c	TXDo-	B09c
NAND-AD(9)	B08b	PCI-AD11	B12b	PCI-AD28	B13a	PCI-GNT-A	B12b	POWERDOWN-1394	B11b	SCL-UP-VIP	B08a	STROBE3P-SUB	B05a	TUN-VIPER-RX-DATA11	B05c	TXDo-	B09d
NAND-ALE	B08b	PCI-AD11	B13a	PCI-AD28	B13b	PCI-GNT-A	B13b	POWER-OK-DISPLAY	B05e	SDA-AMBI	B09b	SUPPLY-FAULT	B05e	TUN-VIPER-RX-DATA11	B07c	TXDo+	B09c
NAND-CLE	B08b	PCI-AD11	B13b	PCI-AD28	B15	PCI-GNT-A	B15	POWER-OK-DISPLAY	B16a	SDA-AMBI	B16a	SUPPLY-FAULT	B09b	TUN-VIPER-RX-DATA12	B05c	TXDo+	B09d
NAND-REN	B08b	PCI-AD11	B15	PCI-AD29	B07a	PCI-GNT-B	B12b	POWER-OK-PLATFORM-3V3	B05e	SDAC-VDDD	B05e	SUPPLY-FAULT	B16b	TUN-VIPER-RX-DATA12	B07c	TXD-UP	B05e
NAND-WEN	B08b	PCI-AD12	B07a	PCI-AD29	B08b	PCI-GNT-C	B12b	POWER-OK-PLATFORM-3V3	B07a	SDA-DMA	B07a	TEMP-SENSOR	B05e	TUN-VIPER-RX-DATA13	B05c	TXD-UP	B08a
ON-MODE	B05e	PCI-AD12	B12b	PCI-AD29	B12b	PCI-GNT-C	B13a	POWER-OK-PLATFORM-3V3	B16a	SDA-DMA	B07e	TS-CLK	B07c	TUN-VIPER-RX-DATA13	B07c	TXD-VIPER	B07a
ON-MODE	B05g	PCI-AD12	B13a	PCI-AD29	B13a	PCI-GNT-C	B13b	PR	B11b	SDA-DMA	B08a	TS-DATA0	B07c	TUN-VIPER-RX-DATA14	B05c	TXD-VIPER	B08a
P0.0	B05e	PCI-AD12	B13b	PCI-AD29	B13b	PCI-INT-1	B12b	PR	B14b	SDA-DMA-BUS1	B06a	TS-DATA1	B07c	TUN-VIPER-RX-DATA14	B07c	TXPNXA-	B05b
P0.0	B05g	PCI-AD12	B15	PCI-AD29	B15	PCI-INT-2	B12b	PROT_DC	B01	SDA-DMA-BUS1	B08a	TS-DATA2	B07c	TUN-VIPER-RX-DATA15	B05c	TXPNXA+	B05b
P0.1	B05e	PCI-AD13	B07a	PCI-AD3	B07a	PCI-INTA	B07a	PROT-AUDIOSUPPLY	B05g	SDA-DMA-BUS2	B04b	TS-DATA3	B07c	TUN-VIPER-RX-DATA15	B07c	TXPNXB-	B05b
P0.1	B05g	PCI-AD13	B12b	PCI-AD3	B12b	PCI-INTA	B12b	PROT-AUDIOSUPPLY	B16a	SDA-DMA-BUS2	B04f	TS-DATA4	B07c	TUN-VIPER-RX-DATA2	B05c	TXPNXB+	B05b
P0.2	B05e	PCI-AD13	B13a	PCI-AD3	B13a	PCI-IRDY	B07a	PSEN	B05e	SDA-DMA-BUS2	B05e	TS-DATA5	B07c	TUN-VIPER-RX-DATA2	B07c	TXPNXC-	B05b
P0.2	B05g	PCI-AD13	B13b	PCI-AD3	B13b	PCI-IRDY	B12b	PSEN	B05g	SDA-DMA-BUS2	B08a	TS-DATA6	B07c	TUN-VIPER-RX-DATA3	B05c	TXPNXC+	B05b
P0.3	B05e	PCI-AD13	B15	PCI-AD3	B15	PCI-IRDY	B13a	PWRDWN	B09d	SDA-I2C4	B07a	TS-DATA7	B07c	TUN-VIPER-RX-DATA3	B07c	TXPNXCLK-	B05b
P0.3	B05g	PCI-AD14	B07a	PCI-AD30	B07a	PCI-IRDY	B13b	R0e	B09d	SDA-I2C4	B07e	TS-SOP	B07c	TUN-VIPER-RX-DATA4	B05c	TXPNXCLK+	B05b
P0.4	B05e	PCI-AD14	B12b	PCI-AD30	B08b	PCI-IRDY	B15	R0o	B09d	SDA-I2C4	B09b	TS-VALID	B07c	TUN-VIPER-RX-DATA4	B07c	TXPNXD-	B05b
P0.4	B05g	PCI-AD14	B13a	PCI-AD30	B12b	PCI-PAR	B07a	R1e	B09d	SDA-I2C4-DISP	B09b	TUNN-REF	B05c	TUN-VIPER-RX-DATA5	B05c	TXPNXD+	B05b
P0.5	B05e	PCI-AD14	B13b	PCI-AD30	B13a	PCI-PAR	B12b	R1o	B09d	SDA-I2C4-DISP	B09c	TUN-SPIDER-RX-BUSY	B05c	TUN-VIPER-RX-DATA5	B07c	TXPNXE-	B05b
P0.5	B05g	PCI-AD14	B15	PCI-AD30	B13b	PCI-PAR	B13a	R2e	B09d	SDA-MM	B07a	TUN-SPIDER-RX-BUSY	B06a	TUN-VIPER-RX-DATA6	B05c	TXPNXE+	B05b
P0.6	B05e	PCI-AD15	B07a	PCI-AD30	B15	PCI-PAR	B13b	R2o	B09d	SDA-MM	B07e	TUN-SPIDER-RX-CLKN	B05c	TUN-VIPER-RX-DATA6	B07c	UART-SWITCH	B05g
P0.6	B05g	PCI-AD15	B12b	PCI-AD31	B07a	PCI-PAR	B15	R3e	B09d	SDA-MM	B08a	TUN-SPIDER-RX-CLKN	B06a	TUN-VIPER-RX-DATA7	B05c	UART-SWITCH	B08a
P0.7	B05e	PCI-AD15	B13a	PCI-AD31	B08b	PCI-PERR	B07a	R3o	B09d	SDA-MM-BUS1	B08a	TUN-SPIDER-RX-CLKP	B05c	TUN-VIPER-RX-DATA7	B07c	UART-SWITCH-5V2	B08a
P0.7	B05g	PCI-AD15	B13b	PCI-AD31	B12b	PCI-PERR	B12b	R4e	B09d	SDA-MM-BUS1	B09b	TUN-SPIDER-RX-CLKP	B06a	TUN-VIPER-RX-DATA8	B05c	UART-SWITCHn	B08a
P2.0	B05e	PCI-AD15	B15	PCI-AD31	B13a	PCI-PERR	B13a	R4o	B09d	SDA-MM-BUS1	B09d	TUN-SPIDER-RX-DATA0	B05c	TUN-VIPER-RX-DATA8	B07c	UDQS	B06b
P2.0	B05g	PCI-AD16	B07a	PCI-AD31	B13b	PCI-PERR	B13b	R5e	B09d	SDA-MM-BUS1	B11b	TUN-SPIDER-RX-DATA0	B06a	TUN-VIPER-RX-DATA9	B05c	UP-3V3	B05f
P2.1	B05e	PCI-AD16	B08b	PCI-AD31	B15	PCI-PERR	B15	R5o	B09d	SDA-MM-BUS2	B08a	TUN-SPIDER-RX-DATA1	B05c	TUN-VIPER-RX-DATA9	B07c	USB1-DM	B07a
P2.1	B05g	PCI-AD16	B12b	PCI-AD4	B07a	PCI-REQ	B07a	R6e	B09d	SDA-MM-BUS2	B14b	TUN-SPIDER-RX-DATA1	B06a	TUN-VIPER-TX-BUSY	B05c	USB1-DM-1	B07a
P2.2	B05e	PCI-AD16	B13a	PCI-AD4	B12b	PCI-REQ	B12b	R6o	B09d	SDA-MM-BUS2	B16a	TUN-SPIDER-RX-DATA10	B05c	TUN-VIPER-TX-BUSY	B07c	USB1-DP	B07a
P2.2	B05g	PCI-AD16	B13b	PCI-AD4	B13a	PCI-REQ	B13a	R7e	B09d	SDA-MM-BUS2	B16b	TUN-SPIDER-RX-DATA10	B06a	TUN-VIPER-TX-CLKN	B05c	USB1-DP-1	B07a
P2.3	B05e	PCI-AD16	B15	PCI-AD4	B13b	PCI-REQ	B13b	R7o	B09d	SDA-MOP	B09b	TUN-SPIDER-RX-DATA11	B05c	TUN-VIPER-TX-CLKN	B07c	USB201-DM1	B07a
P2.3	B05g	PCI-AD17	B07a	PCI-AD4	B15	PCI-REQ-A	B07a	RAS	B06b	SDA-MOP	B09d	TUN-SPIDER-RX-DATA11	B06a	TUN-VIPER-TX-CLKP	B05c	USB201-DM1	B13a
P2.4	B05e	PCI-AD17	B08b	PCI-AD5	B07a	PCI-REQ-A	B12b	RAS	B09d	SDA-TUN	B02	TUN-SPIDER-RX-DATA12	B05c	TUN-VIPER-TX-CLKP	B07c	USB201-DP1	B07a
P2.4	B05g	PCI-AD17	B12b	PCI-AD5	B12b	PCI-REQ-A	B13b	RC	B05e	SDA-TUN	B08a	TUN-SPIDER-RX-DATA12	B06a	TUN-VIPER-TX-DATA0	B05c	USB201-DP1	B13a
P2.5	B05e	PCI-AD17	B13a	PCI-AD5	B13a	PCI-REQ-A	B15	RC	B16a	SDA-UP-SW	B05e	TUN-SPIDER-RX-DATA13	B05c	TUN-VIPER-TX-DATA0	B07c	USB201-OC1	B07a
P2.5	B05g	PCI-AD17	B13b	PCI-AD5	B13b	PCI-REQ-B	B07a	REGIMBEAU	B07a	SDA-UP-VIP	B05e	TUN-SPIDER-RX-DATA13	B06a	TUN-VIPER-TX-DATA1	B05c	USB201-OC1	B13a
P2.6	B05g	PCI-AD17	B15	PCI-AD5	B15	PCI-REQ-B	B12b	REGIMBEAU	B16b	SDA-UP-VIP	B07a	TUN-SPIDER-RX-DATA14	B05c	TUN-VIPER-TX-DATA1	B07c	USB201-PWE1	B07a
P2.6-TEST	B05g	PCI-AD18	B07a	PCI-AD6	B07a	PCI-REQ-C	B12b	RESET-1394	B07a	SDA-UP-VIP	B07e	TUN-SPIDER-RX-DATA14	B06a	TUN-VIPER-TX-DATA10	B05c	USB201-PWE1	B13a
P2.7	B05e	PCI-AD18	B08b	PCI-AD6	B12b	PCI-REQ-C	B13a	RESET-AUDIO	B05e	SDA-UP-VIP	B08a	TUN-SPIDER-RX-DATA15	B05c	TUN-VIPER-TX-DATA10	B07c	USB202-DM2	B07a
P2.7	B05g	PCI-AD18	B12b	PCI-AD6	B13a	PCI-REQ-C	B13b	RESET-AUDIO	B08c	SDM	B05e	TUN-SPIDER-RX-DATA15	B06a	TUN-VIPER-TX-DATA11	B05c	USB202-DM2	B13a
P50	B05e	PCI-AD18	B13a	PCI-AD6	B13b	PCI-SERR	B07a	RESET-ETHERNET	B07a	SDM	B16b	TUN-SPIDER-RX-DATA2	B05c	TUN-VIPER-TX-DATA11	B07c	USB202-DP2	B07a
P50	B16b	PCI-AD18	B13b	PCI-AD6	B15	PCI-SERR	B12b	RESET-ETHERNET	B15	SDM-PNX	B05e	TUN-SPIDER-RX-DATA2	B06a	TUN-VIPER-TX-DATA12	B05c	USB202-DP2	B13a
P50-3V3	B05e	PCI-AD18	B15	PCI-AD7	B07a	PCI-SERR	B13a	RESET-FE-MAIN	B07a	SEL-DV1F	B07a	TUN-SPIDER-RX-DATA3	B05c	TUN-VIPER-TX-DATA12	B07c	USB202-OC2	B13a
P50-HDMI	B05e	PCI-AD19	B07a	PCI-AD7	B12b	PCI-SERR	B13b	RESET-FE-SUB	B07a	SEL-DV3F	B07a	TUN-SPIDER-RX-DATA3	B06a	TUN-VIPER-TX-DATA13	B05c	USB202-PWE2	B13a
P50-HDMI	B11a	PCI-AD19	B08b	PCI-AD7	B13a	PCI-SERR	B15	RESET-Main-NVM	B05e	SEL-IF-LL1	B04g	TUN-SPIDER-RX-DATA4	B05c	TUN-VIPER-TX-DATA13	B07c	USB2-DM	B07a
PARX0-	B11a	PCI-AD19	B12b	PCI-AD7	B13b	PCI-STOP	B07a	RESET-Main-NVM	B08a	SEL-IF-LL1	B07a	TUN-SPIDER-RX-DATA4	B06a	TUN-VIPER-TX-DATA14	B05c	USB2-DM-1	B07a
PARX0-	B11b	PCI-AD19	B13a	PCI-AD7	B15	PCI-STOP	B12b	RESET-MIPS	B05e	SEL-IF-LL2	B04c	TUN-SPIDER-RX-DATA5	B05c	TUN-VIPER-TX-DATA14	B07c	USB2-DP	B07a
PARX0+	B11a	PCI-AD19	B13b	PCI-AD8	B07a	PCI-STOP	B13a	RESET-MIPS	B07a	SEL-IF-LL2	B07a	TUN-SPIDER-RX-DATA5	B06a	TUN-VIPER-TX-DATA15	B05c	USB2-DP-1	B07a
PARX0+	B11b	PCI-AD19	B15	PCI-AD8	B12b	PCI-STOP	B13b	RESET-PNX2015	B05e	SOUND-ENABLE	B07a	TUN-SPIDER-RX-DATA6	B05c	TUN-VIPER-TX-DATA15	B07c	USB-BUS-PW	B07a
PARX1-	B11a	PCI-AD2	B07a	PCI-AD8	B13a	PCI-STOP	B15	RESET-POD-CI	B07a	SOUND-ENABLE	B16a	TUN-SPIDER-RX-DATA6	B06a	TUN-VIPER-TX-DATA2	B05c	USB-OVERCUR	B07a
PARX1-	B11b	PCI-AD2	B12b	PCI-AD8	B13b	PCI-TRDY	B07a	RESET-STBY	B05g	SOUND-ENABLE-VPR	B07a	TUN-SPIDER-RX-DATA7	B05c	TUN-VIPER-TX-DATA2	B07c	VDISP	B09c
PARX1+	B11a	PCI-AD2	B13a	PCI-AD8	B15	PCI-TRDY	B12b	RESET-STBY	B08a	SPDIF-HDMI	B07c	TUN-SPIDER-RX-DATA7	B06a	TUN-VIPER-TX-DATA3	B05c	VISUAL-CHECK	B02
PARX1+	B11b	PCI-AD2	B13b	PCI-AD9	B07a	PCI-TRDY	B13a	RESET-SYSTEM	B05e	SPDIF-HDMI	B11b	TUN-SPIDER-RX-DATA8	B05c	TUN-VIPER-TX-DATA3	B07c	VISUAL-CHECK	B04c
PARX2-	B11a	PCI-AD2	B15	PCI-AD9	B12b	PCI-TRDY	B13b	RESET-SYSTEM	B07a	SPDIF-IN1	B07c	TUN-SPIDER-RX-DATA8	B06a	TUN-VIPER-TX-DATA4	B05c	VREF-AUD-POS	B04b
PARX2-	B11b	PCI-AD20	B07a	PCI-AD9	B13a	PCI-TRDY	B15	RESET-SYSTEM	B07e	SPDIF-IN1	B14c	TUN-SPIDER-RX-DATA9	B05c	TUN-VIPER-TX-DATA4	B07c	VREF-AUD-POS	B05a
PARX2+	B11a	PCI-AD20	B08b	PCI-AD9	B13b	PLL-1V2	B05f	RESET-SYSTEM	B12b	SPDIF-OPT-IN	B14c	TUN-SPIDER-RX-DATA9	B06a	TUN-VIPER-TX-DATA5	B05c	VREFD-DDR	B07b
PARX2+	B11b	PCI-AD20	B12b	PCI-AD9	B15	PLL-3V3	B05f	RESET-SYSTEM	B13b	SPDIF-OPT-IN	B16b	TUN-SPIDER-TX-BUSY	B05c	TUN-VIPER-TX-DATA5	B07c	VREF-DDR	B07b
PARXC-	B11a	PCI-AD20	B13a	PCI-CBE0	B07a	PLL-OUT	B07a	RESET-TM	B06a	SPDIF-OUT1	B07c	TUN-SPIDER-TX-BUSY	B06a	TUN-VIPER-TX-DATA6	B05c	VREF-DDR-PNX	B05d
PARXC-	B11b	PCI-AD20	B13b	PCI-CBE0	B12b	PLL-OUT	B08b	RESET-TM	B07a	SPDIF-OUT1	B14c	TUN-SPIDER-TX-CLKN	B05c	TUN-VIPER-TX-DATA6	B07c	VREFS	B06b
PARXC+	B11a	PCI-AD20	B15	PCI-CBE0	B13a	PNX-MA-0	B05d	RESET-UP	B05e	SPDIF-SEL-OUT1	B14c	TUN-SPIDER-TX-CLKN	B06a	TUN-VIPER-TX-DATA7	B05c	VREF-VPR	B07c
PARXC+	B11b	PCI-AD21	B07a	PCI-CBE0	B13b	PNX-MA-1	B05d	RESET-UP	B05g	SPI-1	B14b	TUN-SPIDER-TX-CLKP	B05c	TUN-VIPER-TX-DATA7	B07c	VSe	B09d
PARX-DDC-SCL	B11a	PCI-AD21	B08b	PCI-CBE0	B15	PNX-MA-10	B05d	RESET-USB20	B07a	SPI-1	B14c	TUN-SPIDER-TX-CLKP	B06a	TUN-VIPER-TX-DATA8	B05c	VSo	B09d
PARX-DDC-SCL	B11b	PCI-AD21	B12b	PCI-CBE1	B07a	PNX-MA-11	B05d	RESET-USB20	B13a	SPI-2	B14b	TUN-SPIDER-TX-DATA0	B05c	TUN-VIPER-TX-DATA8	B07c	WE	B06b
PARX-DDC-SDA	B11a	PCI-AD21	B13a	PCI-CBE1	B08b	PNX-MA-12	B05d	RXD	B08a	SPI-2	B14c	TUN-SPIDER-TX-DATA0	B06a	TUN-VIPER-TX-DATA9	B05c	WE	B09d
PARX-DDC-SDA	B11b	PCI-AD21	B13b	PCI-CBE1	B12b	PNX-MA-2	B05d	RXD	B14b	SPI-CLK	B05e	TUN-SPIDER-TX-DATA1	B05c	TUN-VIPER-TX-DATA9	B07c	XIO-ACK	B07a
PB	B11b	PCI-AD21	B15	PCI-CBE1	B13a	PNX-MA-3	B05d	RXD	B16b	SPI-CSB	B05e	TUN-SPIDER-TX-DATA1	B06a	TXAe-	B09c	XIO-ACK	B08b
PB	B14b	PCI-AD22	B07a	PCI-CBE1	B13b	PNX-MA-4	B05d	RXD-UP	B05e	SPI-OUT	B14b	TUN-SPIDER-TX-DATA10	B05c	TXAe-	B09d	XIO-D10	B07a
PBRX0-	B11a	PCI-AD22	B08b	PCI-CBE1	B15	PNX-MA-5	B05d	RXD-UP	B08a	SPI-OUT	B14c	TUN-SPIDER-TX-DATA10	B06a	TXAe+	B09c	XIO-D11	B07a
PBRX0-	B11b	PCI-AD22	B12b	PCI-CBE2	B07a	PNX-MA-6	B05d	RXD-VIPER	B07a	SPI-PROG	B05e	TUN-SPIDER-TX-DATA11	B05c	TXAe+	B09d	XIO-D12	B07a
PBRX0+	B11a	PCI-AD22	B13a	PCI-CBE2	B08b	PNX-MA-7	B05d	RXD-VIPER	B08a	SPI-PROG	B16b	TUN-SPIDER-TX-DATA11	B06a	TXAo-	B09c	XIO-D13	B07a
PBRX0+	B11b	PCI-AD22	B13b	PCI-CBE2	B12b	PNX-MA-8	B05d	SCL-AMBI	B09b	SPI-PROG-PNX	B05e	TUN-SPIDER-TX-DATA12	B05c	TXAo-	B09d	XIO-D14	B07a
PBRX1-	B11a	PCI-AD22	B15	PCI-CBE2	B13a	PNX-MA-9	B05d	SCL-AMBI	B16a	SPI-SDI	B05e	TUN-SPIDER-TX-DATA12	B06a	TXAo+	B09c	XIO-D15	B07a
PBRX1-	B11b	PCI-AD23	B07a	PCI-CBE2	B13b	PNX-MBA0	B05d	SCL-DMA	B07a	SPI-SDO	B05e	TUN-SPIDER-TX-DATA13	B05c	TXAo+	B09d	XIO-D8	B07a
PBRX1+	B11a	PCI-AD23	B08b	PCI-CBE2	B15	PNX-MBA1	B05d	SCL-DMA	B07e	SPI-WP	B05e	TUN-SPIDER-TX-DATA13	B06a	TXBe-	B09c	XIO-D9	B07a
PBRX1+	B11b	PCI-AD23	B12b	PCI-CBE3	B07a	PNX-MCAS	B05d	SCL-DMA	B08a	S-SCL-PIP	B02	TUN-SPIDER-TX-DATA14	B05c	TXBe-	B09d	XIO-SEL0	B07a
PBRX2-	B11a	PCI-AD23	B13a	PCI-CBE3	B12b	PNX-MCKE	B05d	SCL-DMA-BUS1	B06a	S-SCL-PIP	B03	TUN-SPIDER-TX-DATA14	B06a	TXBe+	B09c	XIO-SEL0	B08b
PBRX2-	B11b	PCI-AD23	B13b	PCI-CBE3	B13a	PNX-MCLK-N	B05d	SCL-DMA-BUS1	B08a	S-SDA-PIP	B02	TUN-SPIDER-TX-DATA15	B05c	TXBe+	B09d	XIO-SEL1	B07a
PBRX2+	B11a	PCI-AD23	B15	PCI-CBE3	B13b	PNX-MCLK-P	B05d	SCL-DMA-BUS2	B04b	S-SDA-PIP	B03	TUN-SPIDER-TX-DATA15	B06a	TXBo-	B09c	XIO-SEL2	B07a
PBRX2+	B11b	PCI-AD24	B07a	PCI-CBE3	B15	PNX-MCS-0	B05d	SCL-DMA-BUS2	B04f	STANDBY	B05e	TUN-SPIDER-TX-DATA2	B05c	TXBo-	B09d	Y	B11b
PBRXC-	B11a	PCI-AD24	B08b	PCI-CLK-ETHERNET	B08b	PNX-MDATA-0	B05d	SCL-DMA-BUS2	B05e	STANDBY	B16a	TUN-SPIDER-TX-DATA2	B06a	TXBo+	B09c	Y	B14b
PBRXC-	B11b	PCI-AD24	B12b	PCI-CLK-ETHERNET	B15	PNX-MDATA-1	B05d	SCL-DMA-BUS2	B08a	STBY-WP-NAND-FLASH	B05e	TUN-SPIDER-TX-DATA3	B05c	TXBo+	B09d	Y-CVBS-MON-OUT	B08b
PBRXC+	B11a	PCI-AD24	B13a	PCI-CLK-SLOT	B08b	PNX-MDATA-10	B05d	SCL-I2C4	B07a	STBY-WP-NAND-FLASH	B08b	TUN-SPIDER-TX-DATA3	B06a	TXCe-	B09c	Y-CVBS-MON-OUT	B16b
PBRXC+	B11b	PCI-AD24	B13b	PCI-CLK-SLOT	B12b	PNX-MDATA-11	B05d	SCL-I2C4	B07e	STROBE1N-MAIN	B04a	TUN-SPIDER-TX-DATA4	B05c	TXCe-	B09d		
PBRX-DDC-SCL	B11a	PCI-AD24	B15	PCI-CLK-SLOT	B13b	PNX-MDATA-12	B05d	SCL-I2C4	B09b	STROBE1N-MAIN	B05a	TUN-SPIDER-TX-DATA4	B06a	TXCe+	B09c		
PBRX-DDC-SCL	B11b	PCI-AD25	B07a	PCI-CLK-SPIDER	B06a	PNX-MDATA-13	B05d	SCL-I2C4-DISP	B09b	STROBE1N-SUB	B04e	TUN-SPIDER-TX-DATA5	B05c	TXCe+	B09d		
PBRX-DDC-SDA	B11a	PCI-AD25	B08b	PCI-CLK-SPIDER	B08b	PNX-MDATA-14	B05d	SCL-I2C4-DISP	B09c	STROBE1N-SUB	B05a	TUN-SPIDER-TX-DATA5	B06a	TXCLKe-	B09c		
PBRX-DDC-SDA	B11b	PCI-AD25	B12b	PCI-CLK-USB20	B08b	PNX-MDATA-15	B05d	SCL-MM	B07a	STROBE1P-MAIN	B04a	TUN-SPIDER-TX-DATA6	B05c	TXCLKe-	B09d		
PCI-AD0	B07a	PCI-AD25	B13a	PCI-CLK-USB20	B13a	PNX-MDATA-2	B05d	SCL-MM	B07e	STROBE1P-MAIN	B05a	TUN-SPIDER-TX-DATA6	B06a	TXCLKe+	B09c		
PCI-AD0	B08b	PCI-AD25	B13b	PCI-CLK-VPR	B07a	PNX-MDATA-3	B05d	SCL-MM	B08a	STROBE1P-SUB	B04e	TUN-SPIDER-TX-DATA7	B05c	TXCLKe+	B09d		
PCI-AD0	B12b	PCI-AD25	B15	PCI-CLK-VPR	B08b	PNX-MDATA-4	B05d	SCL-MM-BUS1	B08a	STROBE1P-SUB	B05a	TUN-SPIDER-TX-DATA7	B06a	TXCLKo-	B09c		

F_15710_135.eps
220905

Layout SSB (v3) (Overview Top Side)

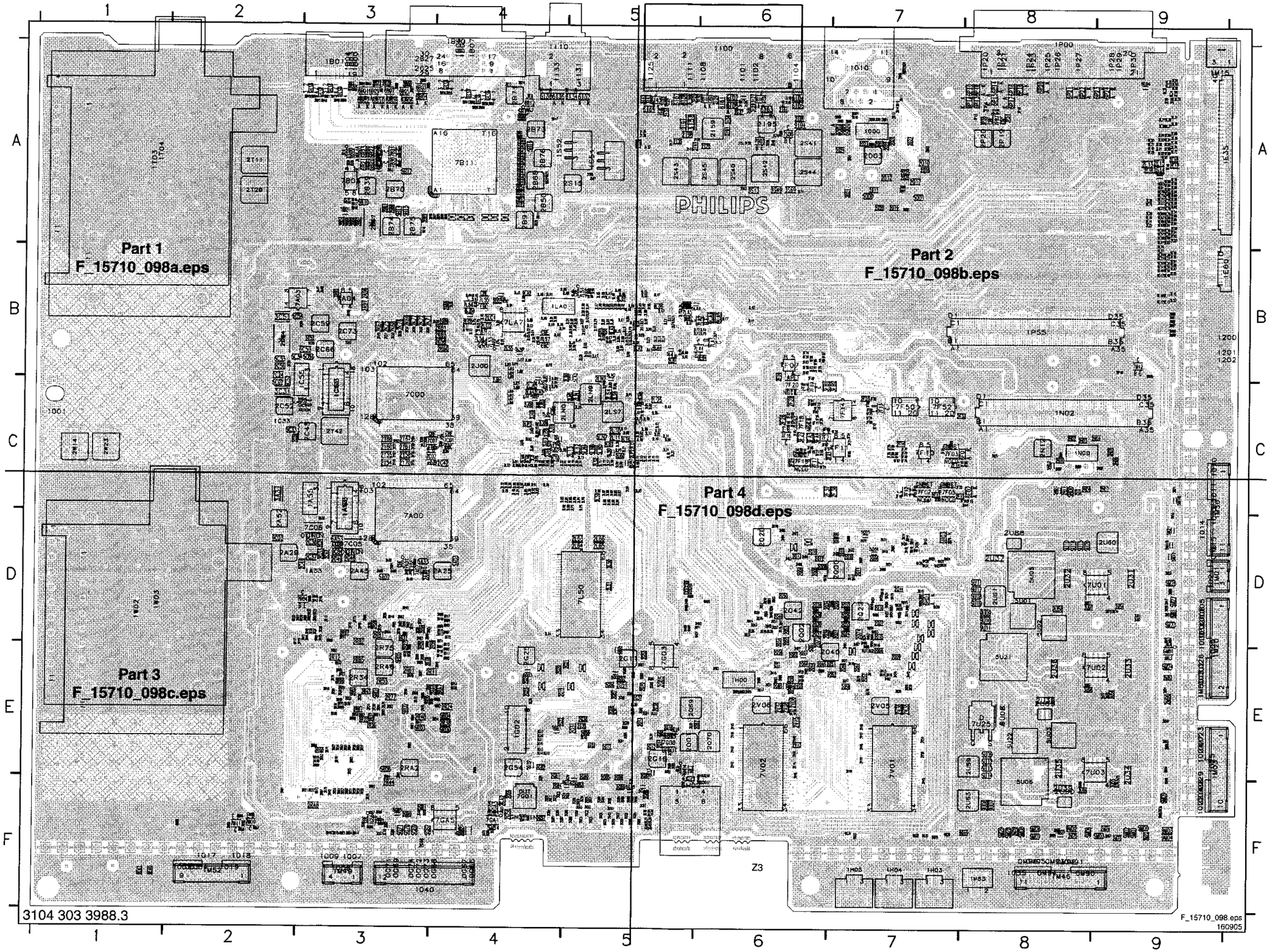

Mapping SSB (v3) (Top Side)

1A33 D3	2C48 D3	2G69 F3	2K64 B3	2M14 F3	2Q57 E7	2R96 E4	3B19 A3	3F82 C6	3H74 E7	3LB5 B4	3LT2 B4	3R22 F3	5J01 C4	6I43 A5	9E25 B9	9H53 D7			
1A53 C3	2C49 D3	2G74 F3	2K67 B3	2M15 F3	2Q58 E7	2R97 E3	3B20 A3	3F85 C7	3H75 E6	3LB6 B4	3LT3 B4	3R37 D3	5J02 C4	6I60 A6	9E26 B9	9H54 D7			
1A55 C2	2C52 C2	2G80 E5	2K68 B3	2M16 F3	2Q59 E6	2R98 E3	3B21 A3	3F86 C7	3H79 D7	3LB7 B5	3LT4 B4	3R38 D3	5J03 C4	6I61 A6	9E27 B9	9H55 D7			
1A63 D3	2C53 B2	2G81 E4	2K69 B3	2M47 D9	2Q63 E6	2R99 D3	3B22 A3	3F88 C7	3H82 E6	3LB8 B5	3LT5 B4	3R39 D3	5J04 C4	6I62 A6	9E29 A9	9H56 D7			
1B01 A3	2C56 B2	2G82 E4	2K71 B3	2M49 E9	2Q64 E6	2RA1 E3	3B23 A3	3F90 C7	3H83 E6	3LB9 B5	3LT6 B4	3R40 D3	5J05 C4	6I63 A6	9E31 A9	9H57 D7			
1B30 A3	2C59 B3	2G83 F5	2K72 B3	2M51 D9	2Q65 E6	2RA2 E3	3B24 A4	3FA0 C6	3H84 D6	3LC0 B5	3LT7 B4	3R42 D3	5J06 C4	6I64 A5	9E32 A9	9H59 D7			
1B31 A3	2C60 B2	2G84 F4	2K75 B3	2M58 D9	2Q66 D7	2RA3 E3	3B26 A3	3FA1 C6	3H86 D6	3LC1 B4	3LT8 B4	3R43 D3	5J07 C4	6LA0 B6	9E33 A9	9I37 A5			
1B32 A3	2C62 B3	2G85 E5	2K76 B3	2M67 F9	2Q67 E6	2RA4 E3	3B28 A3	3FA2 C6	3H87 E6	3LC2 B4	3LU2 B4	3R44 D3	5J08 B4	6LA1 B6	9E35 A9	9I91 A5			
1B33 A3	2C64 B2	2G86 E5	2K77 B3	2M69 F8	2Q69 E6	2RA5 E3	3B29 A4	3FA3 C6	3H88 D6	3LC3 B4	3LU3 B4	3R45 D3	5J09 B4	6M01 E9	9E37 A9	9I94 A6			
1B34 A4	2C66 B3	2G87 E5	2L01 C5	2M72 F9	2Q70 E6	2RA6 E4	3B31 A3	3FA4 C6	3H90 D7	3LC4 B5	3LU4 B4	3R46 D3	5L50 C5	6O00 A7	9E38 A9	9L01 B4			
1B35 A4	2C73 B3	2G88 F5	2L02 C5	2M73 F9	2Q73 D6	2RA7 E4	3B33 A3	3FA5 C6	3H93 D6	3LC5 B5	3LU5 B4	3R47 D3	5LA1 B5	6O01 A7	9E40 F1	9L02 B4			
1B36 A4	2E00 A9	2G89 F5	2L03 C5	2M74 F9	2Q74 D7	2RA8 F3	3B48 A3	3FA6 C6	3H94 D6	3LC8 B5	3M02 D9	3R48 D3	5LA2 B5	6P10 A8	9E42 F1	9L06 B5			
1B37 A4	2E01 A9	2G90 F5	2L09 B5	2M75 F8	2Q76 D6	2RA9 E4	3B49 A3	3FA7 C6	3H97 D7	3LC9 B5	3M03 D9	3R49 D3	5LA3 C4	6P11 A8	9E46 A9	9L07 B5			
1B40 A4	2E02 A9	2G91 F5	2L10 C5	2M76 F8	2Q77 E7	2RB2 D3	3B50 A4	3FA8 C6	3H98 D7	3LD0 B5	3M07 D9	3R50 F3	5LA4 B5	6P12 A8	9E47 B9	9L10 B5			
1C33 C2	2E03 A9	2G92 F5	2L11 C5	2M78 F8	2Q78 E7	2RB3 D3	3B51 A4	3FA9 B6	3H99 E7	3LD1 B5	3M08 D9	3R51 F3	5LN0 C5	6P13 A8	9E48 B9	9L40 B5			
1C53 B3	2E04 A9	2G93 F5	2L12 C5	2M81 D9	2Q79 E7	2RB5 E3	3B52 A4	3FB1 C6	3I02 A5	3LD2 B5	3M21 C9	3R52 F3	5LN1 C4	6P14 A8	9E49 B9	9L41 B5			
1C55 C3	2E05 A9	2G94 F5	2L13 C5	2M82 E9	2Q80 E6	2S15 A4	3B53 A4	3FB2 C7	3I04 A6	3LD3 B5	3M24 F3	3R53 F3	5LN2 B5	6P15 A8	9E50 B9	9LA0 B4			
1C63 C3	2E06 A9	2G95 F5	2L16 C5	2M85 F9	2Q81 D6	2S40 A6	3B54 A3	3FB3 C7	3I05 A6	3LD4 B5	3M25 F3	3R54 E3	5LN3 C5	6P16 A8	9E51 B9	9LA2 B4			
1D40 F3	2E12 B9	2G96 F5	2L17 C5	2M90 E9	2Q82 D7	2S41 A6	3B55 A4	3G00 F4	3I16 A6	3LD5 B5	3M36 F9	3R55 E3	5LN4 C5	6P17 A8	9E52 B9	9LA3 B5			
1E35 A9	2E13 A9	2G97 F5	2L18 C5	2M92 F2	2Q83 D6	2S42 A6	3B56 A4	3G01 F4	3I27 A6	3LD6 B5	3M50 E9	3R56 E3	5LN5 C5	6P18 A8	9E53 B9	9LA4 B5			
1E50 B9	2E14 A9	2G98 F5	2L19 C5	2M93 F2	2Q84 D6	2S43 A5	3B57 A4	3G02 F4	3I28 A6	3LD7 B5	3M54 E9	3R57 E3	5LN6 C5	6P20 A8	9E54 B9	9LA5 B5			
1G02 E4	2E15 A9	2G99 F5	2L20 C5	2M96 B9	2Q85 D7	2S44 A6	3B58 A4	3G06 E5	3I29 A5	3LD8 B5	3M55 F2	3R58 F3	5LN7 C5	6P21 A8	9E55 A9	9LA6 B4			
1H00 E6	2E16 A9	2GA2 F4	2L21 C5	2M97 B9	2Q86 D7	2S45 A5	3B59 A4	3G07 E5	3I30 A5	3LD9 B5	3M56 F2	3R59 F3	5LN8 C5	6P22 A8	9E56 A9	9LA7 B5			
1H01 E6	2E17 A9	2GA5 F6	2L22 C4	2M98 B9	2Q87 D7	2T11 A2	3B60 A4	3G08 E5	3I35 A5	3LE0 B5	3M57 F2	3R60 F3	5LN9 B4	6P23 A8	9E57 A9	9LB4 B6			
1H03 F7	2E18 A9	2GA6 F5	2L23 C4	2N00 C9	2Q88 D7	2T20 A2	3B61 A4	3G09 E5	3I36 A5	3LE1 B5	3M58 F2	3R61 F3	5M00 F9	6P24 A9	9E58 A9	9LB5 B5			
1H04 F7	2E30 A9	2GB0 F3	2L25 C5	2N01 C8	2R00 E3	2U31 D9	3B62 A4	3G10 E5	3I37 A5	3LE2 B5	3M60 B9	3R62 E3	5M01 F9	6U08 E8	9E59 A9	9LC4 B5			
1H05 F7	2E31 A9	2GB1 F3	2L26 C4	2N02 C8	2R01 F2	2U32 D8	3B63 A3	3G11 E4	3I41 A5	3LE3 B5	3M61 B9	3R63 E3	5M02 F9	7A00 C3	9E60 A9	9LC5 B5			
1I00 A5	2E53 B9	2GB4 F4	2L27 C5	2N03 C8	2R02 F3	2U33 E9	3B64 A3	3G12 E4	3I42 A5	3LE4 B5	3M62 B9	3R64 E3	5M03 F9	7A01 D3	9E61 A9	9LC6 B5			
1I07 A5	2E54 A9	2GB5 F4	2L28 C5	2N04 C9	2R03 E3	2U34 F9	3B65 A3	3G13 E4	3I43 A5	3LE5 B5	3N08 C8	3R65 E3	5M04 F8	7A02 D3	9E62 A9	9LC7 B5			
1I10 A5	2E56 A9	2GB6 F4	2L29 C5	2N05 C9	2R04 F3	2U35 E8	3B66 A3	3G14 E4	3I50 A6	3LE6 B5	3N25 C8	3R66 E3	5M05 F8	7A03 B3	9E63 A9	9M02 F8			
1LA0 B4	2E58 A9	2GB7 F4	2L40 B4	2N06 C9	2R05 E3	2U36 E8	3B67 A3	3G15 E4	3I51 A6	3LE7 B5	3N27 C8	3R67 E3	5M06 F8	7A04 B3	9E64 A9	9M03 F9			
1M01 D9	2E60 A9	2GB8 F5	2L41 B6	2N07 C9	2R06 E3	2U37 D8	3B68 A3	3G16 E4	3I58 A5	3LE8 B5	3N28 C8	3R68 E3	5M07 F8	7B03 A3	9E65 A9	9M04 F9			
1M03 E9	2E62 A9	2GB9 F5	2L47 B5	2N08 C8	2R07 F3	2U38 E8	3B69 A3	3G17 E4	3I61 A6	3LE9 B5	3N29 C8	3R69 E3	5M08 F8	7B11 A4	9E66 A9	9M08 B9			
1M15 A9	2E64 A9	2GC0 F5	2L48 B5	2N10 C8	2R08 E3	2U39 F8	3B70 A3	3G20 F5	3I62 A5	3LF0 B5	3O00 A7	3R70 E3	5M09 F9	7B30 A3	9E67 A9	9M09 F2			
1M20 D9	2E66 A9	2GC1 F5	2L50 D5	2N11 C8	2R09 E3	2U58 D8	3B71 A3	3G21 F5	3I64 A5	3LF1 B6	3O01 A7	3R71 D4	5M17 D9	7B31 A3	9E68 A9	9P10 B9			
1M36 D9	2E68 A9	2GC2 F5	2L51 D5	2N12 C8	2R10 E3	2U59 E8	3B72 A3	3G22 E5	3J00 C4	3LF2 B5	3O02 A7	3R72 D4	5M18 C9	7C00 B3	9E69 A9	9Q28 F7			
1M46 F9	2E70 A9	2GC3 F5	2L59 C5	2O00 A7	2R11 E4	2U60 D9	3B73 A4	3G23 E5	3J01 C4	3LF3 B5	3O03 A7	3R73 F3	5M19 D9	7C01 C4	9E70 A9	9Q29 F7			
1M49 F3	2E72 A9	2GC4 F5	2L60 C5	2O01 A7	2R12 E3	2U61 D8	3B75 A4	3G26 E4	3J02 C4	3LF4 B6	3O04 A7	3R74 E3	5M21 D8	7C02 C3	9E71 A9	9Q30 F7			
1M52 F2	2E74 A9	2GC5 F5	2L61 D4	2O02 A7	2R13 D3	2U63 F8	3B89 A4	3G30 E5	3J07 C4	3LF5 B8	3O05 A7	3R75 E3	5M23 D9	7C05 D3	9E72 A9	9Q32 F7			
1M63 F8	2E76 A9	2GC6 F5	2L62 B5	2O03 A7	2R14 F3	2U73 D9	3B90 A3	3G31 E6	3J08 C4	3LF7 B6	3O06 A7	3R80 D3	5M24 E9	7C06 D2	9E73 A9	9Q33 F7			
1N00 C9	2E78 A9	2GC7 F6	2L63 D5	2O04 A7	2R18 E3	2U74 D9	3B91 A3	3G32 E4	3J09 C4	3LF8 B4	3O07 A7	3R81 D3	5M26 D9	7C07 C3	9E74 A9	9Q34 F7			
1N02 C8	2E80 A9	2GC8 F5	2L64 D5	2O05 A7	2R20 E3	2U75 E9	3B92 A3	3G33 E4	3J11 C4	3LF9 B5	3O08 A7	3R82 D3	5M27 D9	7C56 C3	9E75 A9	9Q49 F8			
1O00 A7	2E85 B9	2GC9 F5	2L65 D5	2O06 A7	2R21 E3	2U76 F9	3B93 A3	3G34 E5	3L00 C4	3LG0 B5	3O09 A7	3R83 D2	5M28 F8	7F02 C7	9E76 A9	9R01 D3			
1O10 A7	2E87 B9	2GD0 F5	2L66 D5	2O07 A7	2R22 E3	2U77 E9	3B94 A4	3G35 E5	3L01 C4	3LG1 B5	3O10 A7	3R85 D3	5M29 F8	7F03 C7	9E77 A9	9R02 E4			
1P00 A7	2E89 B9	2GD1 F5	2LA0 B4	2O10 A7	2R23 E3	2U78 E9	3B95 A4	3G36 F5	3L02 C4	3LG2 B5	3O11 A7	3R88 E3	5N00 C8	7F05 C7	9E78 A9	9R03 E3			
1P55 B8	2E90 A9	2GD2 F5	2LA1 B4	2O11 A7	2R24 E4	2U85 E8	3B96 A3	3G37 F5	3L03 C4	3LG3 B5	3O12 A7	3R89 E3	5N01 C8	7F07 B6	9E79 A9	9R04 E3			
1S51 A5	2E91 B9	2GE0 F4	2LA2 B5	2O12 A7	2R25 E3	2U86 F8	3B97 A3	3G52 F5	3L04 C4	3LG4 B4	3O13 A7	3R90 E4	5N02 C8	7F10 C7	9E80 A9	9R05 E3			
1S52 A5	2E92 A9	2GE1 F4	2LA3 B5	2O17 A7	2R26 E3	2U87 D8	3B98 A4	3G53 F5	3L05 C4	3LG5 B4	3O14 A7	3S06 A5	5O00 A7	7F11 C7	9E81 A9	9R06 E4			
1T03 B1	2E93 A9	2GE2 F4	2LA4 C4	2O18 A7	2R27 E3	2U88 D8	3C00 C3	3G54 F5	3L06 C4	3LG6 B4	3P11 A8	3S07 A5	5O01 A7	7F12 C7	9E82 A9	9R08 D3			
1T04 B1	2E94 A9	2GE3 F4	2LA5 C4	2O19 A7	2R28 E3	2U89 E8	3C01 C3	3G66 E5	3L07 C4	3LG7 B5	3P13 A8	3S13 A6	5Q01 E6	7F13 C7	9E83 A9	9R13 F3			
1W02 C1	2E95 B9	2GE4 F5	2LB0 B5	2O20 A7	2R29 E3	2U90 F8	3C02 C4	3G67 F3	3L08 C4	3LG8 B5	3P16 A8	3S46 A6	5Q02 E6	7F14 C7	9E84 A9	9R14 E3			
1W03 E1	2E96 B9	2GE5 F5	2LB1 B5	2O21 A7	2R30 E3	2V02 E6	3C03 C3	3G68 F3	3L09 C4	3LG9 B4	3P18 A8	3S49 A6	5Q03 E6	7F15 C6	9E85 A9	9R15 E3			
2A01 D3	2F12 C7	2GE6 F5	2LB2 B5	2O22 A7	2R31 E3	2V03 E6	3C04 C3	3G69 F3	3L10 C4	3LH0 C5	3P31 A8	3S50 A6	5Q04 D7	7F16 C6	9E86 A9	9R17 D2			
2A10 D3	2F14 C7	2GE7 F5	2LC0 B4	2O23 A7	2R32 D3	2V05 E7	3C05 C4	3G73 F3	3L11 C5	3LH1 C5	3P33 A8	3S63 A6	5Q05 D7	7F17 C6	9E87 A9	9R20 D3			
2A25 D4	2F15 C7	2GE8 F5	2LC1 B4	2O24 A7	2R33 E3	2V06 E6	3C06 C4	3G77 F5	3L12 C5	3LH2 B5	3P35 A8	3S68 A6	5R00 E4	7F18 C6	9E88 A9	9R21 D3			
2A29 D2	2F16 B6	2GE9 F5	2LC2 B4	2O25 A7	2R34 E3	2V07 E6	3C07 C4	3G78 F5	3L13 C5	3LH3 C4	3P36 A8	3S69 A6	5R01 E3	7F19 C6	9E90 A9	9R22 D3			
2A42 D3	2F19 C7	2H00 D5	2LC3 B4	2O26 A7	2R35 E3	2V08 E6	3C08 C3	3G79 F5	3L14 C5	3LH4 C4	3Q00 D7	3S70 A6	5R02 E3	7F20 C6	9E92 A9	9R23 D2			
2A45 D3	2F21 C6	2H02 D5	2LN0 C4	2O27 A7	2R36 E3	2V13 E6	3C09 C4	3G80 F3	3L15 C5	3LH5 B5	3Q03 D7	3S71 A6	5R03 E3	7F21 C6	9E94 A9	9R25 E3			
2A52 D2	2F23 C7	2H06 D7	2LN1 C5	2O28 A7	2R37 E3	2V14 E6	3C31 C2	3G82 F3	3L16 C5	3LH6 B4	3Q06 D7	3U54 D9	5R04 E4	7F50 C7	9E96 A9	9R26 E3			
2A88 B4	2F24 C6	2H07 D7	2LN2 B5	2P19 A8	2R38 E4	2V15 E6	3C51 B2	3GA1 F4	3L17 C5	3LH7 B5	3Q11 D7	3U55 F9	5R05 E3	7F52 C7	9F04 B6	9R50 E4			
2A89 B4	2F25 C6	2H08 E6	2LN3 C4	2P20 A8	2R40 E3	2V35 E7	3C52 B3	3GA2 F4	3L18 C5	3LH8 B5	3Q12 D7	3U56 E9	5R06 E3	7G00 E5	9F05 B6	9R51 E4			
2A93 B3	2F26 C6	2H09 E6	2LN4 C4	2Q00 D7	2R41 D3	2V36 E7	3E01 A9	3GA3 F4	3L19 C5	3LH9 B5	3Q13 D7	3U96 F8	5U01 D8	7G01 F4	9F06 C7	9U07 F8			
2A96 B3	2F27 C6	2I01 A6	2LN5 C5	2Q01 E6	2R42 F3	2V37 E6	3E02 A9	3GA7 F4	3L20 C4	3LJ0 B5	3Q14 D7	3U97 D8	5U02 D8	7G03 E5	9F07 C7	9U08 F8			
2A97 B3	2F28 C6	2I02 A5	2LN6 C4	2Q02 D6	2R43 E3	2V38 E6	3E03 A9	3GA8 F3	3L21 C5	3LJ1 B5	3Q15 D7	3U98 E8	5U03 E8	7G66 F3	9F08 C7	9U09 D8			
2A99 B3	2F33 C7	2I03 A6	2LN7 C4	2Q04 D6	2R44 F3	2V40 E6	3E04 A9	3GB1 F4	3L22 C4	3LJ2 C4	3Q17 F6	3UB1 D9	5U05 D8	7GA1 F4	9F09 C6	9U10 D8			
2B00 A3	2F37 C6	2I20 A6	2LN8 C4	2Q05 D6	2R46 E3	2V41 E6	3E05 A9	3GB2 E5	3L23 C5	3LJ3 B4	3Q18 E6	3UB2 D9	5U06 F9	7GA5 F4	9F11 C6	9U11 D8			
2B04 A3	2F38 C7	2I21 A5	2LN9 B5	2Q06 E7	2R47 E3	2V42 E6	3E06 A9	3GB5 E5	3L24 C4	3LJ4 B5	3Q19 E6	3V24 E6	5U09 E8	7L50 D4	9F12 C7				
2B05 A3	2G00 E5	2I35 A5	2LP0 C4	2Q07 D7	2R48 D3	2V43 E6	3E25 A9	3GB6 E5	3L25 C5	3LJ5 B5	3Q22 F6	3V25 E6	5U10 D8	7L51 B5	9F19 C6				
2B06 A3	2G01 E5	2I36 A5	2LP1 C5	2Q08 D6	2R49 E4	2V44 E6	3E26 A9	3GB8 F4	3L26 C4	3LJ6 B5	3Q26 E7	3V26 E6	5U11 D8	7L52 B4	9F21 C6				
2B07 A3	2G02 E5	2I37 A6	2LP2 C5	2Q09 E7	2R50 E3	2V45 E6	3E27 A9	3GC8 F3	3L27 C5	3LJ7 B5	3Q27 E7	3V27 E6	5U12 E8	7L53 B4	9F22 C6				
2B39 A3	2G03 E5	2I38 A5	2LP3 C4	2Q10 D7	2R51 E3	2V46 E7	3E28 A9	3GC9 F4	3L28 C4	3LJ8 B5	3Q28 E7	3V44 E7	5U13 E8	7L54 B4	9F23 C6				
2B40 A4	2G04 E5	2I41 A5	2LP4 C5	2Q11 D7	2R52 E3	2V47 E7	3E30 A9	3H00 D8	3L29 C5	3LJ9 B5	3Q30 E5	3V45 F7	5U14 E8	7L55 B4	9F24 C7				
2B41 A4	2G05 E5	2I58 A6	2LP5 C5	2Q12 D6	2R53 E3	2V48 E7	3E31 A9	3H01 D7	3L30 C4	3LK0 B5	3Q31 D7	3V46 E6	5U15 D8	7L56 B4	9F25 C7				
2B42 A4	2G06 E5	2I59 A6	2LP6 C4	2Q13 D6	2R54 E4	2V49 E7	3F01 C7	3H02 E7	3L31 C5	3LK1 B5	3Q32 E7	3V78 E7	5U16 D8	7LA2 B5	9F26 C7				
2B43 A4	2G07 E5	2I61 A6	2LP7 C5	2Q14 D7	2R55 E3	2V50 E7	3F02 C7	3H03 E6	3L32 C4	3LK2 B5	3Q33 D6	5A02 D3	5U17 D8	7LA3 B6	9F27 C6				
2B44 A4	2G08 E6	2I70 A6	2LP8 C4	2Q15 D7	2R56 D3	2V51 E7	3F03 C7	3H04 D5	3L33 C5	3LK3 B5	3Q34 D6	5A03 D4	5U18 D8	7LA4 B5	9G00 E5				
2B45 A4	2G09 E5	2I91 A6	2LP9 C4	2Q16 D7	2R57 D3	2W14 C1	3F04 C7	3H05 D7	3L34 C4	3LK4 B5	3Q35 D6	5A33 D3	5U19 D8	7LA5 B5	9G01 E5				
2B46 A4	2G10 E5	2I94 A6	2LR1 C5	2Q17 E6	2R58 D3	2W23 C1	3F06 C6	3H07 D7	3L35 C5	3LK5 B5	3Q36 D6	5B01 A3	5U20 D8	7LA7 B4	9G66 F3				
2B47 A4	2G11 E5	2I95 A6	2LR2 C5	2Q18 D7	2R59 D3	2Y42 C3	3F07 B6	3H08 E6	3L38 C5	3LK6 B5	3Q37 D6	5B10 A3	5U21 E8	7M09 F2	9G67 F3				
2B48 A4	2G12 E5	2I98 A5	2LR3 C4	2Q19 D6	2R60 E3	2Y49 C3	3F08 B6	3H09 E7	3L39 C5	3LK7 B5	3Q38 D6	5B12 A3	5U22 E8	7M11 F2	9H01 D7				
2B50 A4	2G13 E5	2J00 B4	2LR4 C4	2Q20 D6	2R61 E3	2Y51 C3	3F10 C7	3H10 E7	3L42 B6	3LK8 B5	3Q39 D6	5B13 A4	6A53 D3	7M12 B9	9H02 D5				
2B52 A4	2G14 E5	2J01 C4	2LR5 C5	2Q21 E6	2R62 D3	2Y53 C3	3F11 C7	3H11 E7	3L43 C5	3LK9 B5	3Q41 D6	5B14 A3	6B00 A3	7P87 A8	9H03 D7				
2B54 A4	2G15 E5	2J02 C4	2LR6 C5	2Q22 D7	2R63 D3	2Y54 C3	3F12 C8	3H13 E7	3L44 C4	3LL0 B5	3Q43 D6	5B15 A3	6B01 A3	7R04 D3	9H04 D7				
2B61 A3	2G16 E5	2J03 C4	2LR7 C5	2Q24 D7	2R64 D3	2Y55 C3	3F13 C8	3H14 D6	3L45 B5	3LL1 B5	3Q45 D6	5B16 A4	6B02 A3	7S03 A8	9H05 D6				
2B67 A3	2G17 E5	2J05 C4	2LR8 C5	2Q25 D7	2R65 D3	2Y56 C3	3F21 C7	3H15 E7	3L47 B5	3LL2 B5	3Q47 D6	5C02 C2	6B03 A3	7S06 A8	9H06 D5				
2B68 A4	2G18 E5	2J06 C4	2LR9 C5	2Q26 D7	2R66 D3	2Y57 C3	3F22 C7	3H16 E6	3L48 B5	3LL3 B5	3Q49 D6	5C33 C2	6B04 A3	7U01 D9	9H07 D6				
2B70 A3	2G19 E4	2J08 C4	2LS0 C5	2Q27 D7	2R67 D3	2Y58 C3	3F23 C7	3H17 D6	3L52 B5	3LL4 B5	3Q51 D6	5C34 B2	6B05 A3	7U02 E9	9H08 D5				
2B71 A4	2G20 E4	2J10 C4	2LS1 C5	2Q28 D6	2R68 D3	2Y59 C3	3F25 C7	3H18 D7	3L53 B5	3LL5 B5	3Q53 D6	5C52 C2	6B06 A3	7U03 E9	9H09 D7				
2B73 A4	2G21 E5	2J12 C4	2LS2 C5	2Q29 D7	2R69 E3	2Y60 C3	3F26 C7	3H19 D7	3L72 B5	3LL6 B5	3Q55 D6	5C53 B2	6B07 A3	7U25 E8	9H10 D7				
2B74 B3	2G22 E4	2J13 C4	2LS4 C5	2Q30 D6	2R70 E3	2Y61 C3	3F27 C6	3H20 D7	3L73 B5	3LL7 B5	3Q57 D6	5C54 B2	6B08 A3	7V01 E7	9H11 D7				
2B75 A3	2G23 E4	2J14 B4	2LS5 B4	2Q31 D7	2R71 D3	2Y62 C3	3F50 C8	3H21 D7	3L74 B5	3LL8 B5	3Q59 D6	5C56 B3	6B09 A3	7V02 E6	9H12 D7				
2B76 A4	2G24 E4	2J15 C4	2LS6 C5	2Q32 D7	2R72 E3	2Y64 C3	3F54 C7	3H28 D7	3L78 C5	3LL9 B4	3Q61 D6	5E02 A9	6B10 A3	9A55 D3	9H13 D7				
2B86 A4	2G25 E4	2J16 C4	2LS7 C5	2Q33 D7	2R73 D3	2Y67 C3	3F55 C6	3H29 D7	3L90 C5	3LM0 C5	3Q63 D6	5E04 A9	6B12 A4	9B11 A4	9H15 D7				
2B88 A3	2G30 E5	2J17 B4	2LS8 C4	2Q34 D6	2R74 E3	2Y68 C3	3F56 C6	3H31 D7	3L93 B5	3LM1 C5	3R00 E3	5G00 E5	6B20 A3	9B17 A4	9H16 D7				
2B89 A3	2G31 E5	2J18 C4	2LS9 C4	2Q35 D7	2R75 D3	2Y70 C3	3F57 C6	3H32 D7	3L94 B4	3LM2 C4	3R01 D3	5G01 E4	6B21 A3	9B18 A3	9H18 D7				
2B91 A4	2G32 E5	2J20 C4	2LT0 C4	2Q37 D6	2R76 D3	3A00 D3	3F58 B6	3H33 E6	3L95 B5	3LM3 C4	3R02 E4	5G02 E5	6B22 A3	9B21 A4	9H19 D7				
2B92 A4	2G33 E5	2J22 B4	2LT1 C5	2Q38 D6	2R77 E3	3A01 D3	3F59 B6	3H34 E7	3L96 B5	3LM4 C5	3R03 E4	5G03 E4	6B23 A3	9B22 A4	9H20 D7				
2B93 A4	2G34 E5	2J23 B4	2LT2 C5	2Q39 D6	2R78 D3	3A02 D3	3F60 C6	3H35 D7	3L97 B5	3LM5 C5	3R04 E4	5G10 E4	6C53 B2	9C01 D3	9H22 D7				
2BA0 A3	2G35 E5	2J24 B4	2LT3 C5	2Q40 D7	2R79 D3	3A05 D3	3F61 C6	3H36 D7	3L98 B5	3LM6 C5	3R05 D4	5G11 F5	6F01 C8	9C03 D2	9H23 D7				
2BA1 A3	2G36 E5	2J25 B4	2LT4 C5	2Q41 E6	2R80 E3	3A06 D3	3F

Layout SSB (v3) (Part 1 Top Side)

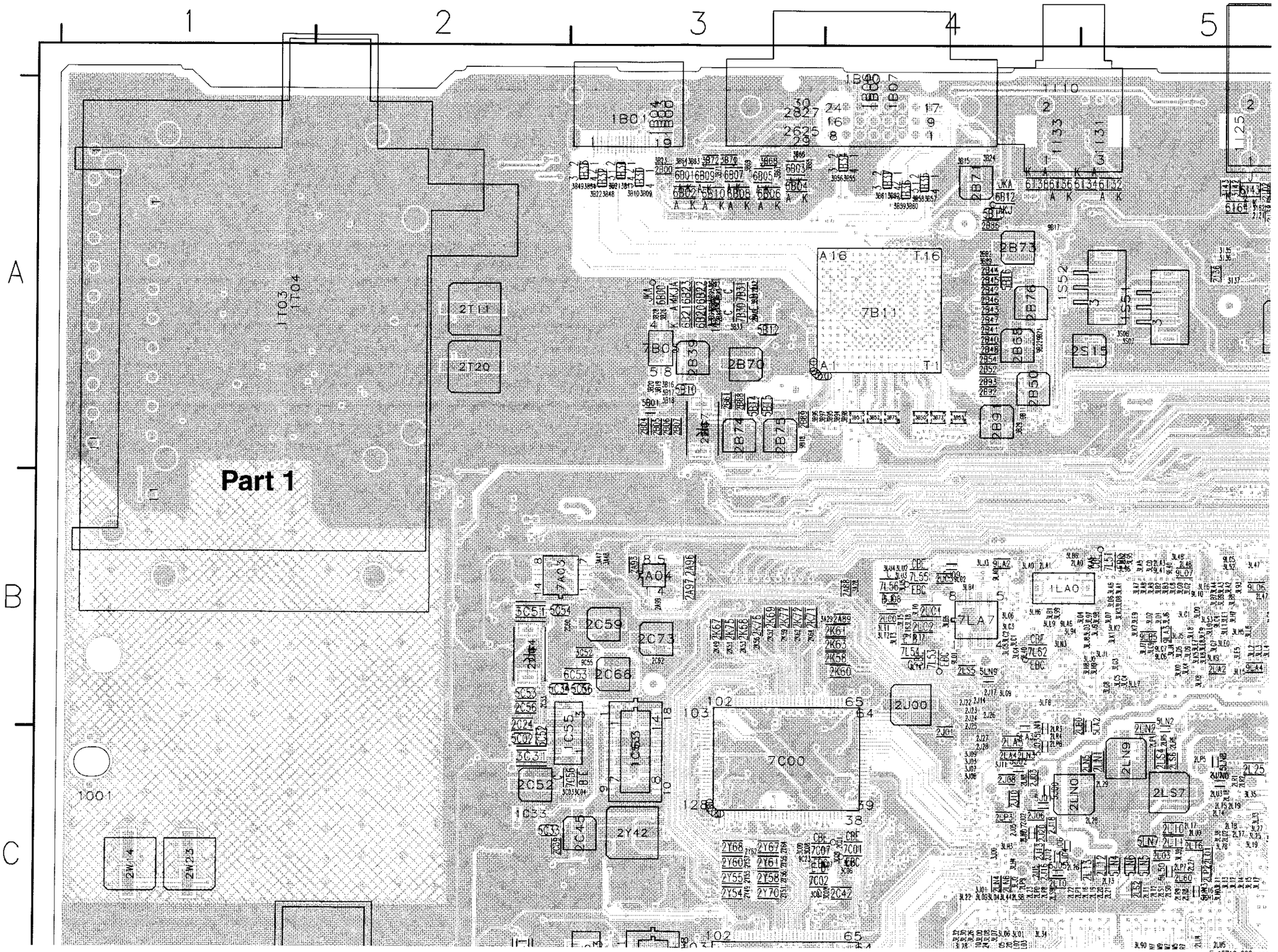

F_15710_098a.eps
150905

Layout SSB (v3) (Part 2 Top Side)

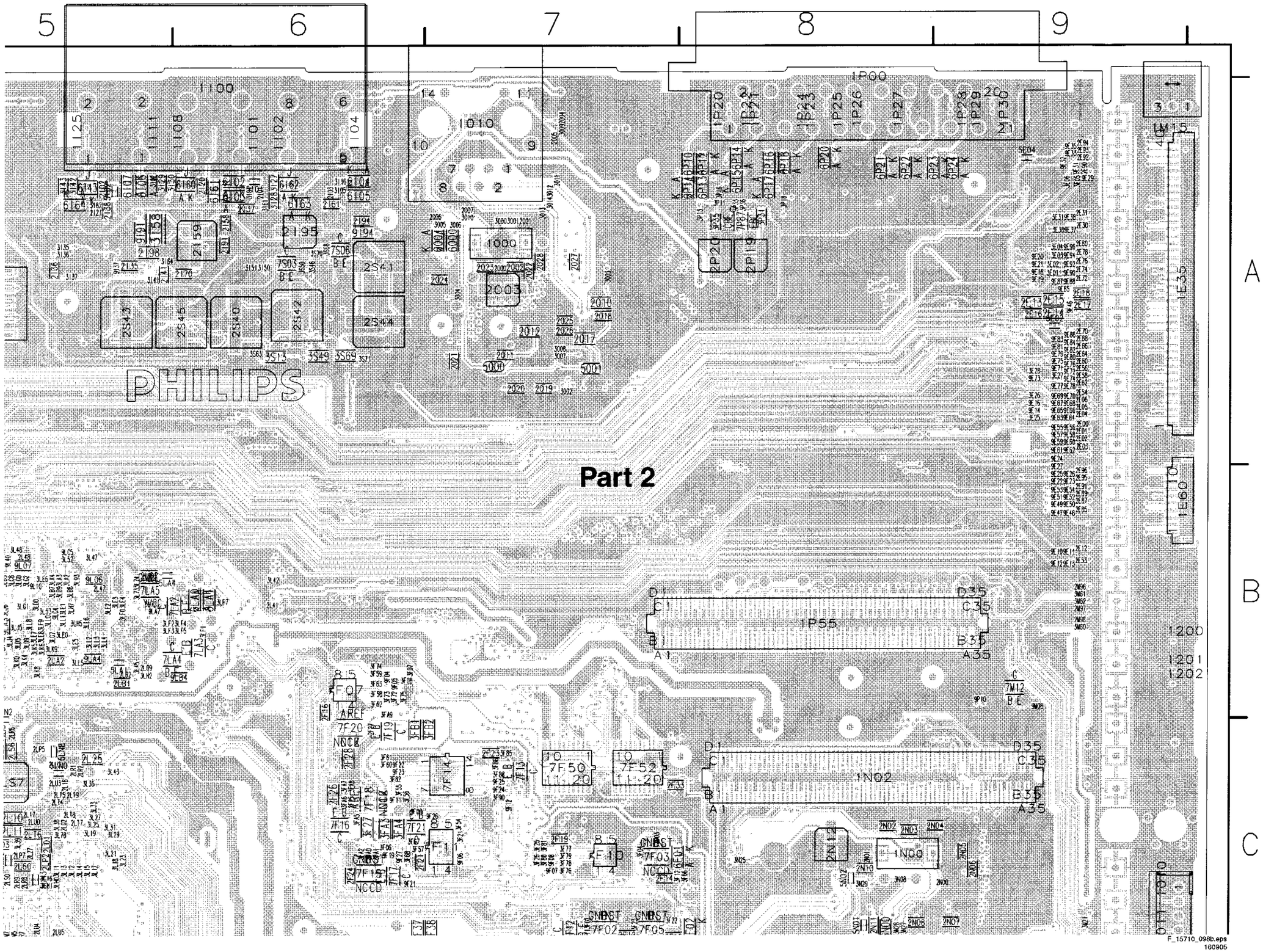

Layout SSB (v3) (Part 3 Top Side)

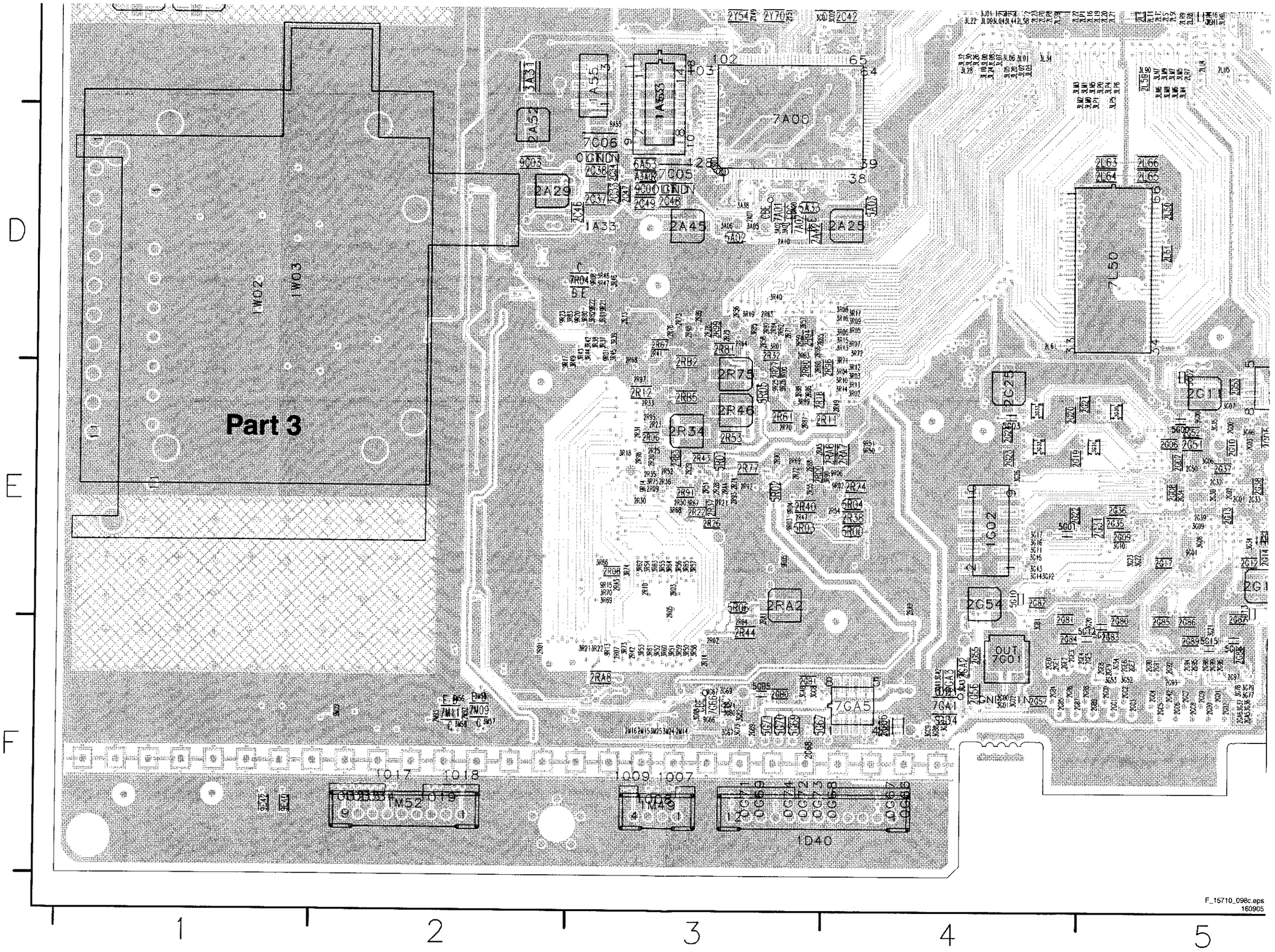

Layout SSB (v3) (Part 4 Top Side)

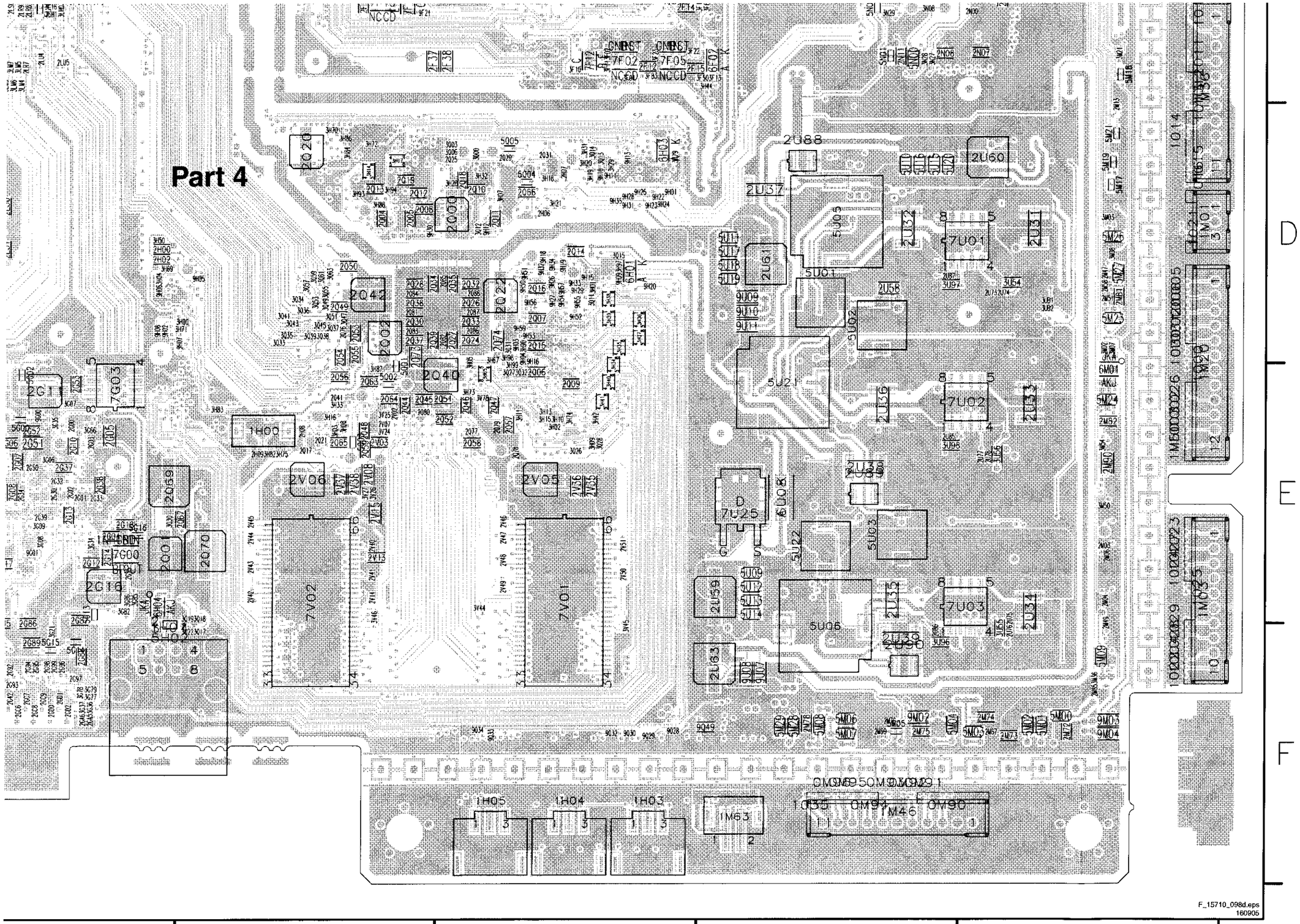

Layout SSB (v3) (Overview Bottom Side)

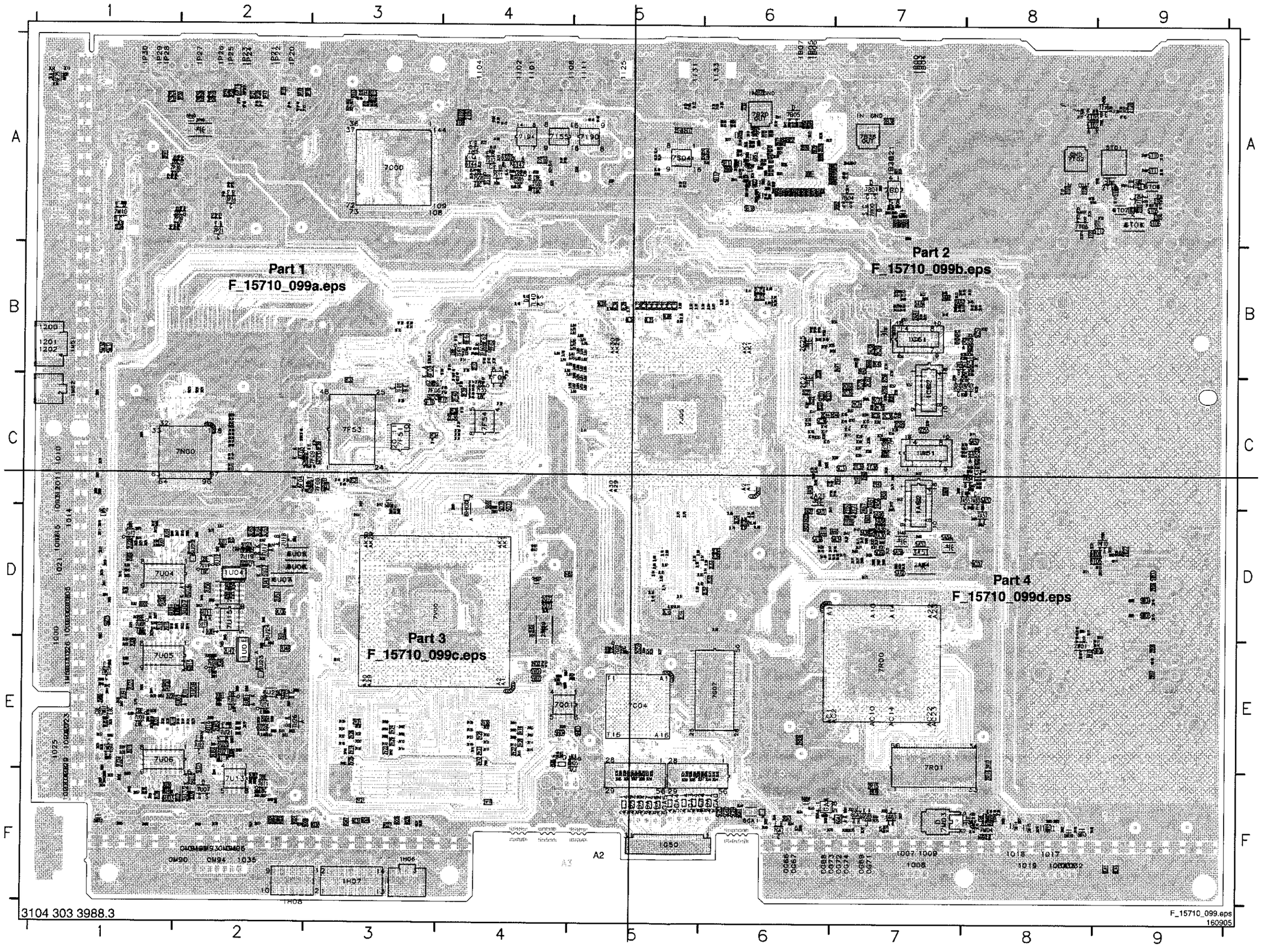

Mapping SSB (v3) (Bottom Side)

1A51 C7
1A52 C7
1A61 C7
1A62 D7
1C51 B7
1C52 B7
1C61 B7
1C62 C7
1G50 F5
1H06 F3
1H07 F3
1H08 F2
1M51 B1
1M62 C1
1U01 E2
1U04 D2
2A02 D7
2A03 C6
2A04 D7
2A05 C6
2A06 D7
2A07 D7
2A08 D7
2A09 D7
2A11 D7
2A12 D7
2A13 D7
2A14 D7
2A15 D7
2A16 D7
2A17 D6
2A18 D6
2A19 D6
2A20 D6
2A21 C6
2A22 D6
2A23 D6
2A24 D7
2A26 D7
2A27 D6
2A28 C6
2A30 D7
2A31 D7
2A32 D7
2A33 D7
2A35 D7
2A36 D7
2A39 D7
2A40 D7
2A41 D7
2A44 D6
2A50 C7
2A53 C8
2A54 C8
2A55 C7
2A56 C7
2A57 C7
2A59 D7
2A60 D7
2A61 C7
2A63 D7
2A64 D7
2A65 D7
2A66 D7
2A67 C7
2A68 D7
2A69 C7
2A70 C8
2A71 C8
2A74 C7
2A75 D7
2A76 D7
2A77 D7
2A81 B7
2A82 B7
2A84 B7
2A85 B7
2A87 B7
2A90 D7
2A91 B8
2A92 B7
2A98 B7
2B01 A7
2B02 A7
2B03 A7
2B10 A6
2B11 A6
2B12 A6
2B13 A6
2B14 A6
2B15 A6
2B16 A6
2B17 A6
2B18 A6
2B20 A6
2B21 A6
2B22 A6
2B23 A6
2B24 A6
2B25 A6
2B26 A6
2B27 A6
2B28 A6
2B29 A6
2B30 A6
2B34 A6
2B35 A6
2B36 A6
2B38 A7
2B49 A6
2B51 A6
2B53 A6
2B55 A6

2B56 A6
2B57 A6
2B58 A6
2B59 A6
2B60 A6
2B62 A6
2B64 A6
2B66 A6
2B69 A6
2B72 A6
2B77 A6
2B78 A6
2B79 A6
2B80 A6
2B81 A6
2B82 A7
2B83 A6
2B85 A6
2B87 A6
2B90 A6
2B94 A6
2BB0 A6
2BB1 A6
2BB3 A6
2BB4 A6
2BB5 A6
2BB6 A6
2BB7 A6
2BB8 A6
2C02 C7
2C03 C7
2C04 C7
2C05 C7
2C06 C7
2C07 C7
2C08 C7
2C09 C7
2C10 C7
2C11 C7
2C12 C7
2C13 C7
2C14 C7
2C15 C6
2C16 C6
2C17 C6
2C18 C6
2C19 C6
2C20 C6
2C21 C6
2C22 C6
2C23 C6
2C25 B6
2C27 C6
2C28 B6
2C29 C7
2C30 C7
2C31 C7
2C35 C7
2C36 C7
2C40 C7
2C41 C7
2C44 C6
2C50 B7
2C55 C7
2C57 C7
2C61 C7
2C63 C7
2C65 C7
2C67 C7
2C68 C7
2C69 C7
2C70 B7
2C72 C7
2C74 B7
2C78 C7
2C79 C7
2C80 C7
2C81 D7
2C82 B8
2C83 C6
2C99 C7
2E08 A1
2E19 F8
2E20 F8
2E25 A1
2E26 A1
2F13 B4
2F17 C4
2F18 C3
2F20 C3
2F31 C3
2F32 C3
2F34 C3
2F35 C4
2F36 C4
2F39 C4
2F40 C4
2F62 B4
2G58 E5
2G59 E5
2G66 F6
2G71 F7
2G73 F7
2G75 F7
2G76 F7
2GA1 F6
2GA3 F6
2GA4 F6
2H01 D4
2H03 D4
2H12 C3

2H13 D3
2I05 A5
2I06 A6
2I92 A4
2I93 A4
2K38 B7
2K39 B7
2K40 B7
2K41 B7
2K42 B7
2K43 B7
2K45 B7
2K46 B6
2K47 C7
2K48 B6
2K50 B6
2K52 B6
2K54 B7
2K55 B6
2K65 C7
2K66 C7
2K70 C7
2K73 C7
2K74 C7
2L00 D6
2L04 D6
2L05 D6
2L14 D5
2L15 D5
2L52 D6
2L53 D6
2L54 D6
2L55 D5
2L56 D6
2L57 D6
2L58 D6
2LC4 B6
2LC5 B6
2M00 C1
2M01 C1
2M02 C1
2M05 E1
2M07 F1
2M08 F1
2M10 D1
2M11 D1
2M12 D1
2M18 F8
2M19 F8
2M20 D1
2M21 D1
2M22 F8
2M29 F8
2M30 F8
2M31 F8
2M50 D1
2M62 F8
2M65 F1
2M66 F1
2M68 F2
2M70 F2
2M77 F2
2M80 E1
2M83 E1
2M94 C1
2M95 F8
2O13 A3
2O14 A3
2O15 A3
2O16 A3
2P10 A2
2P13 A2
2P14 A2
2P17 A2
2P18 A2
2P40 A2
2P41 A1
2Q71 D4
2Q72 D4
2Q75 D4
2Q91 C4
2Q92 D4
2Q93 D4
2R15 F7
2R16 F8
2R17 E8
2R19 F7
2RB6 E6
2S10 A4
2S16 A6
2S17 A5
2S18 A5
2S19 A6
2T01 A9
2T02 A9
2T03 A8
2T04 A9
2T05 A9
2T06 A8
2T10 A9
2T12 A8
2T13 A9
2T18 A8
2T21 A9
2T22 A8
2T23 A8
2T25 A9
2T26 A9
2T27 A9
2T28 A9
2U01 D1
2U02 D1

2U03 D1
2U04 D1
2U05 D2
2U06 D2
2U07 D1
2U08 D1
2U09 E1
2U10 D1
2U11 E2
2U12 D1
2U13 D1
2U14 D2
2U15 D1
2U16 E2
2U17 F2
2U18 E1
2U19 E1
2U20 E1
2U21 E1
2U22 D1
2U23 E1
2U24 E1
2U25 D1
2U26 E1
2U27 E1
2U28 F1
2U29 E2
2U30 E1
2U40 D2
2U41 D2
2U42 E2
2U43 F1
2U44 E1
2U45 D1
2U46 E2
2U47 D2
2U48 E2
2U49 D2
2U50 D2
2U51 D2
2U52 D1
2U53 E1
2U54 F1
2U55 D1
2U56 E1
2U57 F1
2U62 F2
2U64 E2
2U65 E2
2U66 E2
2U71 D2
2U72 D2
2U79 E2
2U80 E2
2U82 E2
2U83 E2
2U84 E2
2U91 E1
2U92 D2
2UB1 E2
2V00 E3
2V01 E4
2V09 D4
2V16 E4
2V17 E4
2V18 E3
2V19 F4
2V20 E4
2V21 F3
2V22 E3
2V23 E4
2V24 E3
2V25 E3
2V26 E4
2V27 E4
2V28 E3
2V30 E4
2V31 E3
2V32 E4
2V33 E4
2V34 E4
2W03 D9
2W06 D9
2W07 E9
2W08 E9
2W15 D9
2W16 D9
2W17 D9
2W18 E8
2W19 E8
2W20 D9
2W21 D9
2W22 D9
2W24 D9
2Y38 C7
2Y39 C7
2Y40 C7
2Y41 C7
2Y43 C7
2Y45 C7
2Y46 C7
2Y47 D7
2Y48 C6
2Y50 C6
2Y52 C6
2Y63 D7
2Y65 D7
2Y66 D7
2Y69 D7
2Y71 D7

3A10 B7
3A11 B7
3A12 B8
3A13 B7
3A14 B8
3A15 B8
3A17 B7
3A19 B7
3A20 B7
3A21 B7
3A22 B7
3A23 B7
3A24 B7
3A25 B7
3A26 B7
3A27 B7
3A39 C6
3A40 C6
3A41 D6
3A42 B7
3A43 B7
3A44 B8
3A45 B8
3A46 B7
3A50 C8
3A51 D7
3A53 D7
3A56 C8
3A57 C8
3A58 C8
3A59 C8
3A60 C7
3A61 C8
3A63 C7
3A65 C8
3A66 C8
3A67 C8
3A80 D7
3A81 D7
3A83 D7
3AB0 A6
3B01 A6
3B02 A7
3B03 A7
3B04 A7
3B05 A7
3B06 A7
3B07 A7
3B08 A7
3B12 A6
3B13 A6
3B24 A7
3B25 A7
3B27 A7
3B30 A6
3B32 A6
3B34 A6
3B35 A6
3B36 A6
3B37 A6
3B38 A6
3B39 A6
3B40 A6
3B41 A6
3B42 A6
3B43 A6
3B44 A6
3B46 F6
3B47 F6
3B48 F5
3B49 F5
3B50 F5
3B51 F5
3B56 F5
3B57 F5
3B58 F5
3B59 F5
3B60 F5
3B61 F5
3B66 F5
3B67 F5
3B68 F5
3B69 F5
3B70 F5
3B71 F5
3B72 F5
3B73 F5
3B74 A6
3B76 A6
3B78 A6
3B79 A6
3B80 A6
3B81 A6
3B82 A6
3B83 A6
3B84 A6
3B85 A6
3B86 A6
3B87 A6
3B88 F5
3B89 F5
3B90 F5
3B91 F5
3B92 F5
3B93 F5
3B94 F5
3B95 F5
3B96 F5
3B97 F5
3B98 F5
3B99 A6
3B100 A6
3B101 A6
3B102 A6
3B103 A6
3B104 A6
3B105 A6
3B106 A6
3B107 A6
3B108 A6
3B109 A6
3B110 A6
3B111 A6
3B112 A6
3B113 A6
3B114 A7
3B115 A7
3B116 A7
3B117 A7
3B118 A7
3B119 A7
3B120 A7
3B121 A7
3B122 A5
3B123 A5
3B125 A6
3B126 A6
3B160 A4
3B167 A4
3B168 A4
3C30 C7
3C32 C7
3C33 C6
3C34 C7
3C39 C6
3C40 C6
3C41 C6
3C43 C7
3C44 C7
3C45 C7
3C50 B8
3C53 C7
3C56 B8
3C57 B8
3C58 B8
3C59 B7
3C60 C7
3C61 C7
3C63 B7
3C65 B8
3C66 B8
3C67 B7
3C80 C6
3C81 D7
3C83 D7
3C84 F5
3C85 F5
3C86 F5
3C87 F5
3C88 F5
3C89 F5
3C90 F6
3C91 F6
3C92 F6
3C93 F6
3C94 F6
3C95 F6
3C96 F6
3C97 F6
3C98 F6
3C99 F6
3C100 F6
3C101 F6
3C102 F6
3C103 F6
3C104 F6
3C105 F6
3C106 F6
3C107 F6
3C108 F6
3C109 F6

Layout SSB (v3) (Part 1 Bottom Side)

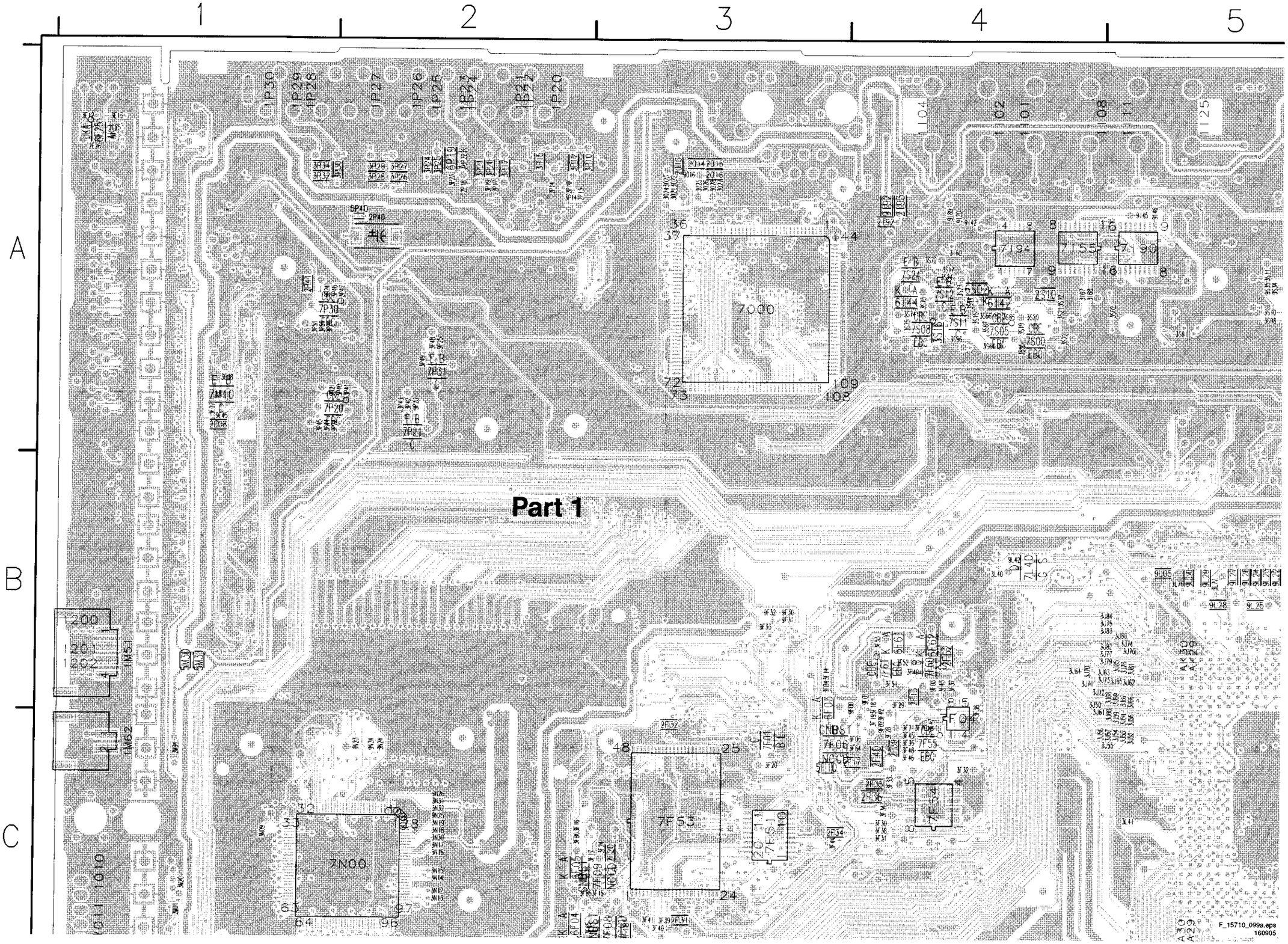

Layout SSB (v3) (Part 2 Bottom Side)

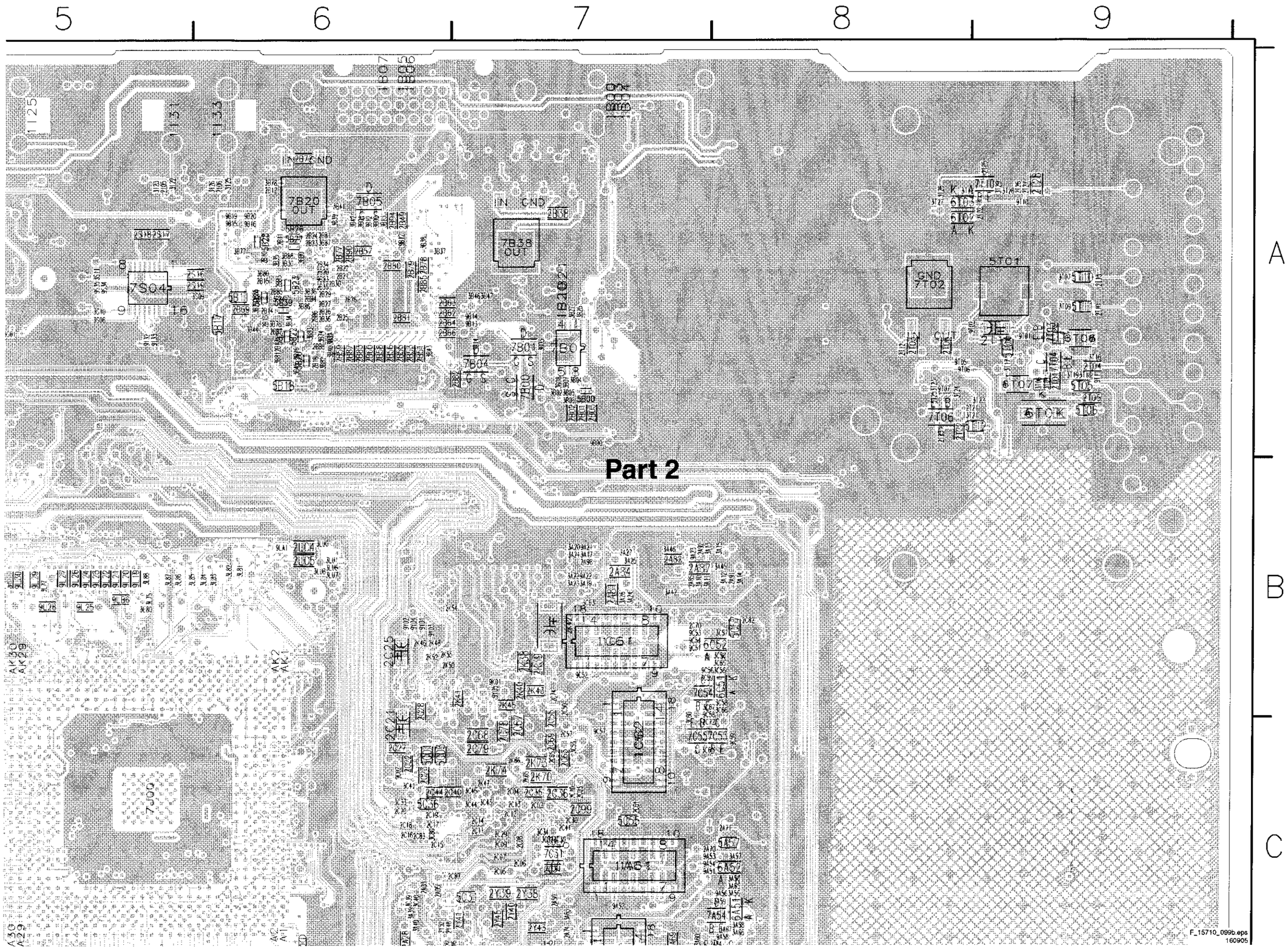

Layout SSB (v3) (Part 3 Bottom Side)

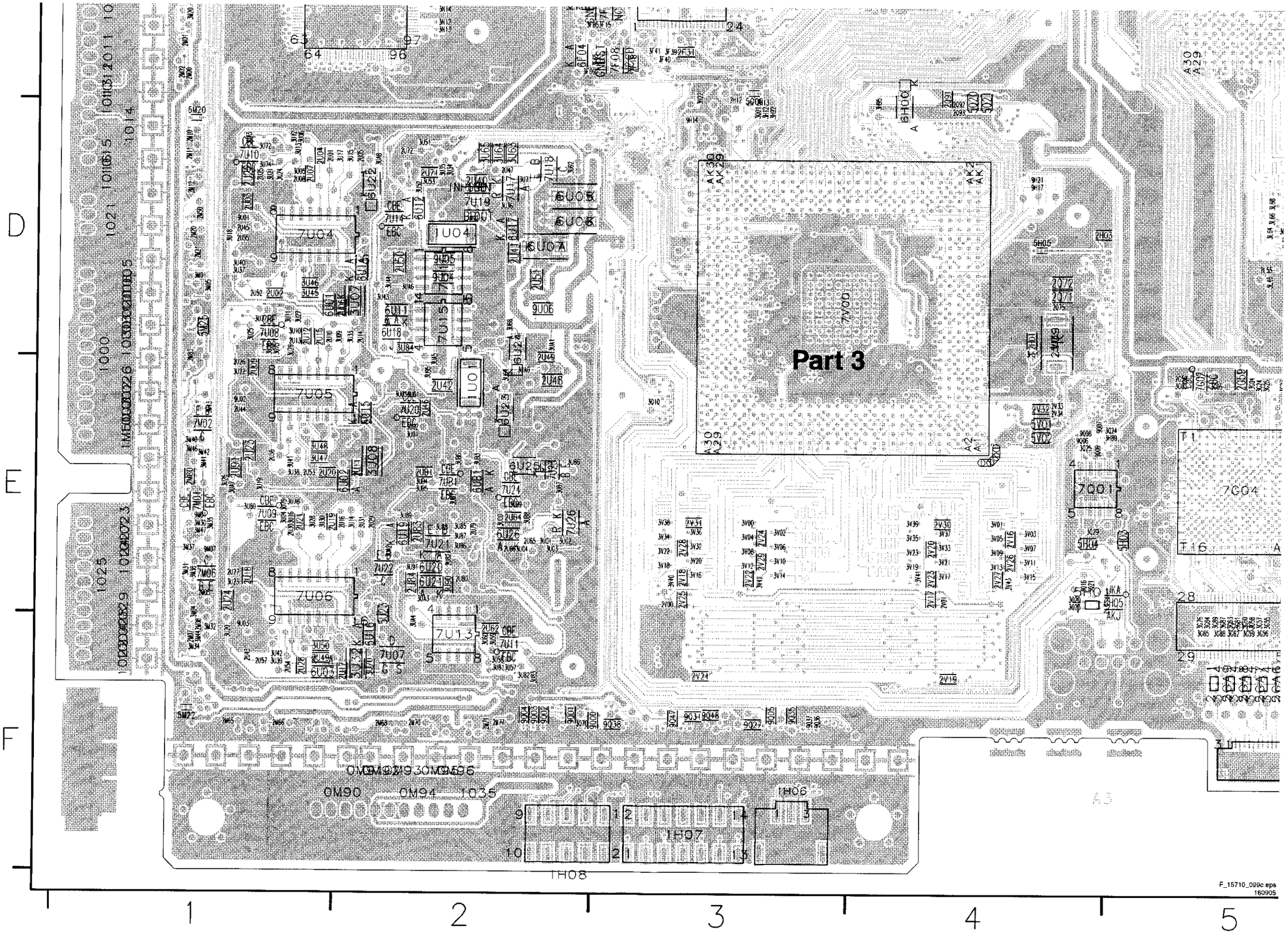

Layout SSB (v3) (Part 4 Bottom Side)

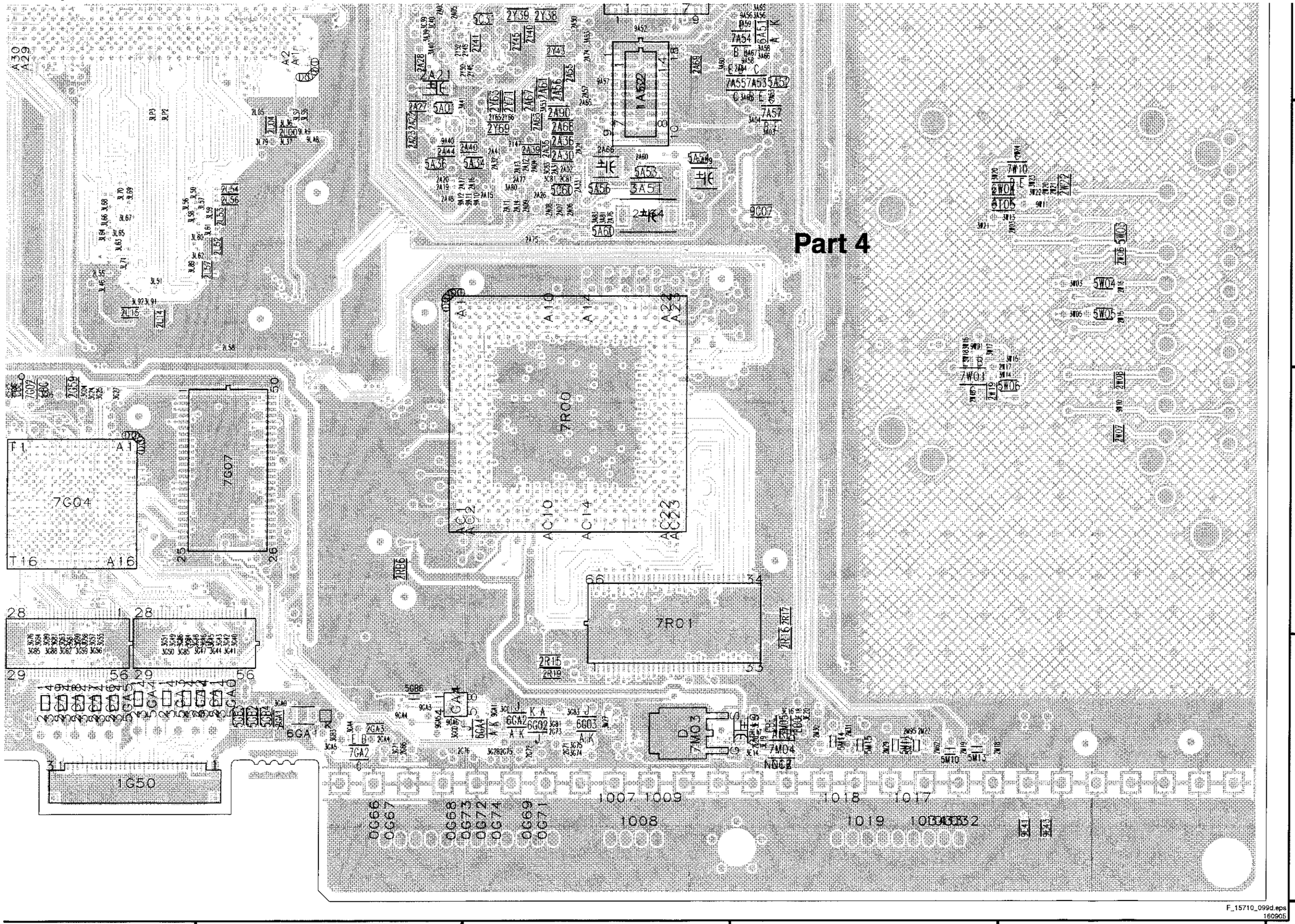

External I/O part 1

BE1 EXTERNAL I/O 1

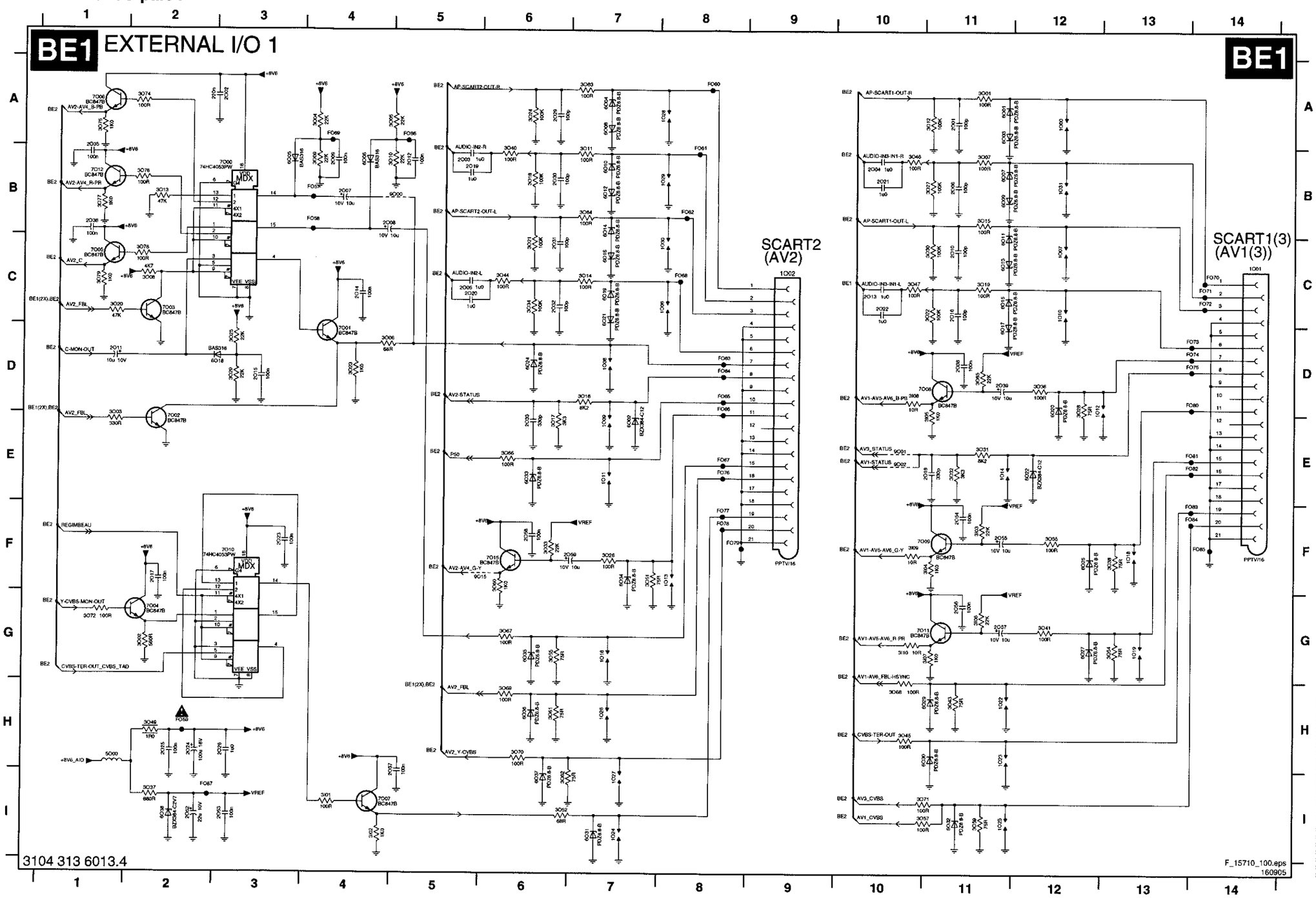

1O00 A12	3O33 F6	FO75 D14
1O01 C14	3O34 C8	FO76 E8
1O02 C9	3O35 F12	FO77 F8
1O06 C8	3O36 D12	FO78 F8
1O07 C12	3O37 I2	FO79 F8
1O08 D7	3O38 F13	FO80 D14
1O09 E7	3O40 B6	FO81 E14
1O10 C12	3O41 G12	FO82 E14
1O11 E7	3O43 H11	FO83 F14
1O12 D12	3O44 C6	FO84 F14
1O13 F8	3O45 H10	FO85 F14
1O14 E11	3O46 B10	FO86 A5
1O16 G7	3O47 C10	FO67 I2
1O18 F13	3O49 H2	
1O19 G13	3O51 F7	
1O22 H11	3O52 I6	
1O23 H11	3O54 G13	
1O24 I7	3O55 G6	
1O25 I11	3O57 I11	
1O26 H7	3O59 I11	
1O27 I7	3O60 F6	
1O28 A8	3O61 H6	
1O29 B8	3O62 I6	
1O30 C8	3O63 A7	
1O31 B12	3O64 B7	
2O01 A11	3O65 D11	
2O02 A3	3O66 E6	
2O03 B5	3O67 G6	
2O04 B10	3O68 H6	
2O05 C5	3O69 H6	
2O06 B11	3O70 H6	
2O07 B4	3O71 I11	
2O08 B4	3O72 G1	
2O09 B4	3O74 A2	
2O10 C11	3O75 A1	
2O11 D1	3O76 B2	
2O12 B5	3O77 B1	
2O13 C10	3O78 C2	
2O14 C4	3O79 C1	
2O15 D3	5O00 H1	
2O16 C11	6O01 A11	
2O17 F2	6O02 E7	
2O18 E11	6O03 A11	
2O19 B5	6O04 A7	
2O20 C5	6O05 B3	
2O21 B10	6O06 B4	
2O22 C10	6O07 B11	
2O23 F3	6O08 A7	
2O24 H2	6O09 B11	
2O25 H2	6O10 B7	
2O26 H3	6O11 C11	
2O29 A6	6O12 B7	
2O30 B6	6O13 C11	
2O31 C6	6O14 B7	
2O32 C6	6O15 C11	
2O39 E6	6O16 C7	
2O35 B1	6O17 D11	
2O36 B1	6O18 D3	
2O37 I5	6O19 C7	
2O38 D11	6O20 D12	
2O39 D11	6O21 C7	
2O52 I2	6O22 E12	
2O53 I3	6O24 D6	
2O54 F11	6O25 F12	
2O55 F11	6O27 G12	
2O56 G11	6O28 H11	
2O57 G11	6O30 H11	
2O58 F6	6O31 I7	
2O59 F7	6O32 I11	
3I01 I4	6O33 E6	
3I02 I4	6O34 F7	
3I03 F11	6O35 G6	
3I04 F11	6O36 H6	
3I05 E11	6O37 I6	
3I06 G11	6O38 I2	
3I07 G11	7O00 B3	
3I08 D10	7O01 D4	
3I09 F10	7O02 E2	
3I10 G10	7O03 C2	
3O01 A11	7O04 G2	
3O02 G2	7O05 C1	
3O03 E1	7O06 A1	
3O04 A4	7O07 I4	
3O05 A4	7O08 D11	
3O06 D4	7O09 F11	
3O07 B11	7O10 F3	
3O08 C2	7O11 G11	
3O09 B4	7O12 B1	
3O10 B4	7O15 F6	
3O11 B7	9O00 B5	
3O12 A11	9O01 E10	
3O13 B2	9O02 E10	
3O14 C7	9O15 F6	
3O15 B11	FO57 B4	
3O16 D7	FO58 B4	
3O17 E6	FO59 H2	
3O18 B6	FO60 A8	
3O19 C11	FO61 B8	
3O20 C1	FO62 B8	
3O21 C6	FO63 D8	
3O22 C11	FO64 D8	
3O23 D4	FO65 D8	
3O24 A6	FO66 D8	
3O25 D3	FO67 E8	
3O26 F7	FO68 C8	
3O27 B11	FO69 A4	
3O28 D12	FO70 C14	
3O29 D3	FO71 C14	
3O30 C11	FO72 C14	
3O31 E11	FO73 D14	
3O32 E11	FO74 D14	

External I/O part 2

BE2 EXTERNAL I/O 2

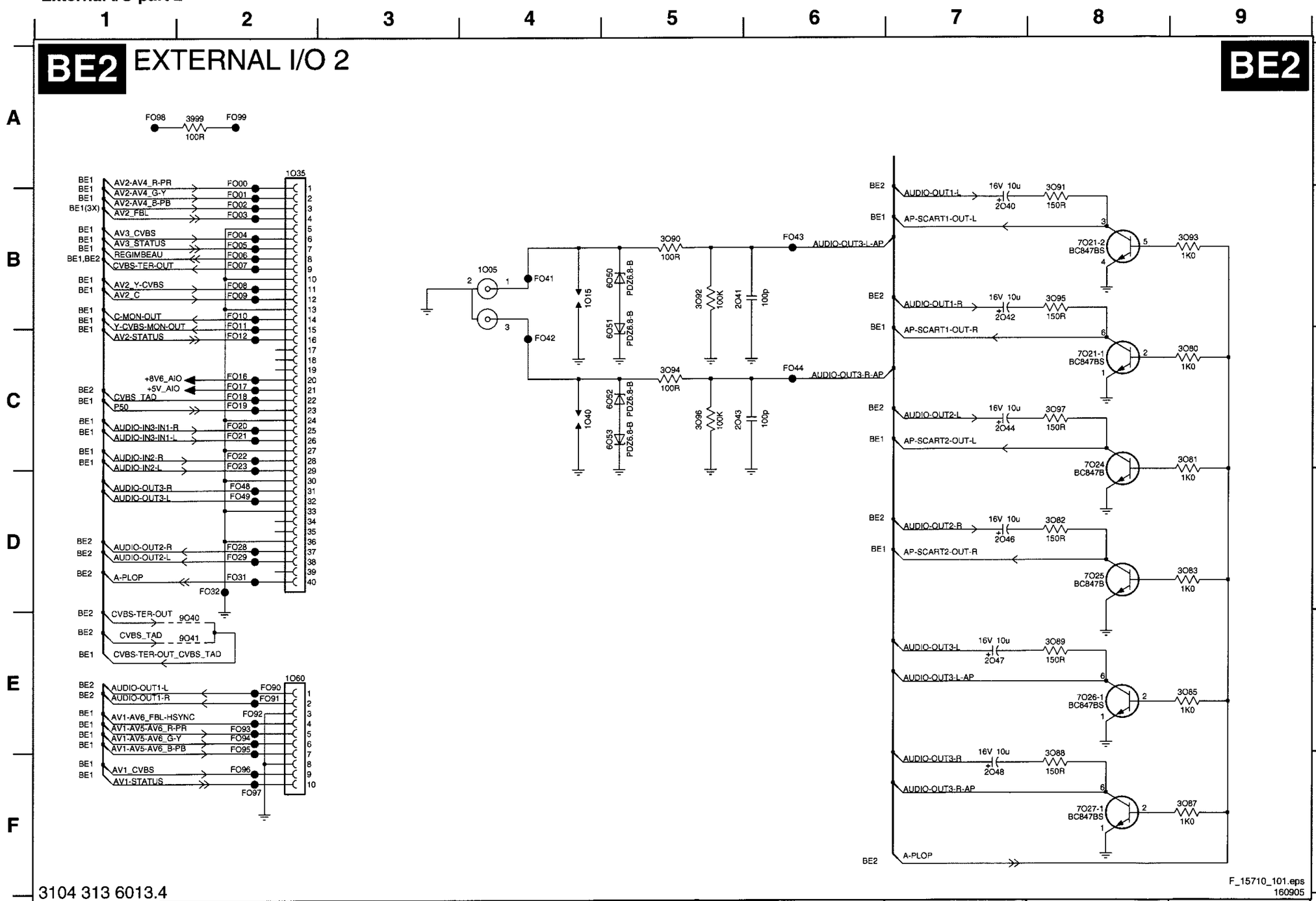

1O05 B4 FO90 E2
1O15 B4 FO91 E2
1O35 A2 FO92 E2
1O40 C4 FO93 E2
1O60 E2 FO94 E2
2O40 B7 FO95 E2
2O41 B5 FO96 F2
2O42 B7 FO97 F2
2O43 C5 FO98 A1
2O44 C7 FO99 A2
2O46 D7
2O47 E7
2O48 F7
3999 A2
3O80 C9
3O81 C9
3O82 D8
3O83 D9
3O85 E9
3O87 F9
3O88 F8
3O89 E8
3O90 B5
3O91 B8
3O92 B5
3O93 B9
3O94 C5
3O95 B8
3O96 C5
3O97 C8
6O50 B5
6O51 C5
6O52 C5
6O53 C5
7O21-1 C8
7O21-2 B8
7O24 C8
7O25 D8
7O26-1 E8
7O27-1 F8
9O40 E2
9O41 E2
FO00 A2
FO01 B2
FO02 B2
FO03 B2
FO04 B2
FO05 B2
FO06 B2
FO07 B2
FO08 B2
FO09 B2
FO10 B2
FO11 B2
FO12 C2
FO16 C2
FO17 C2
FO18 C2
FO19 C2
FO20 C2
FO21 C2
FO22 C2
FO23 C2
FO28 D2
FO29 D2
FO31 D2
FO32 D2
FO41 B4
FO42 C4
FO43 B6
FO44 C6
FO48 D2
FO49 D2

Layout External I/O Panel (Top Side)

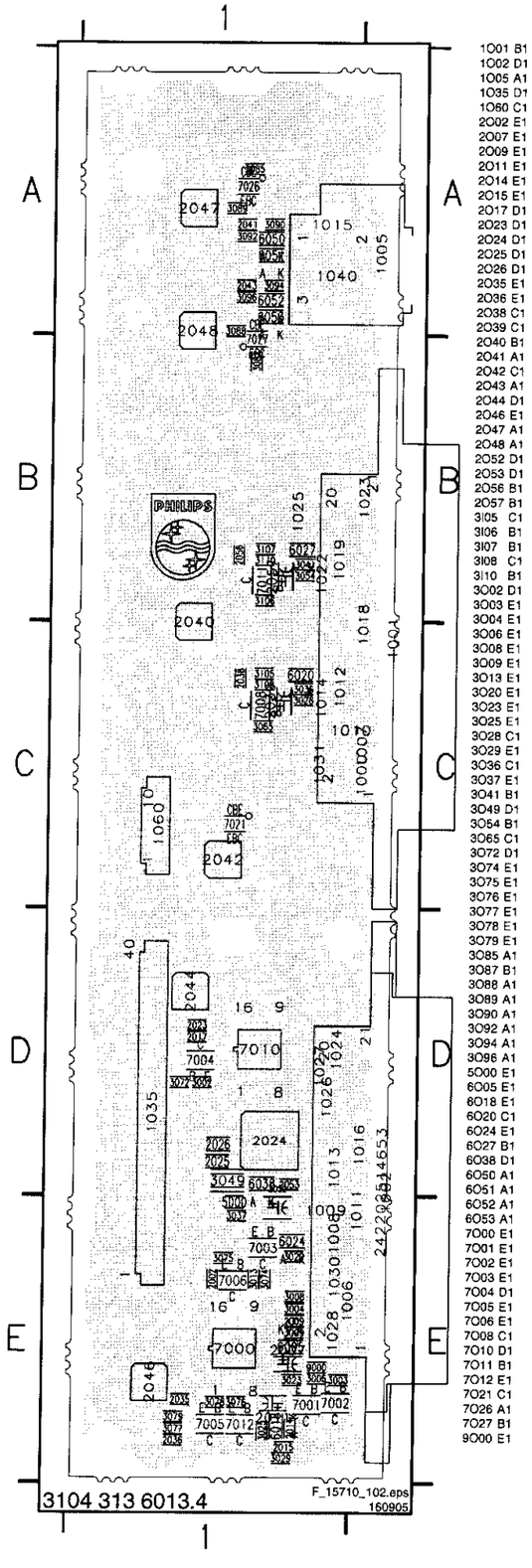

Layout External I/O Panel (Bottom Side)

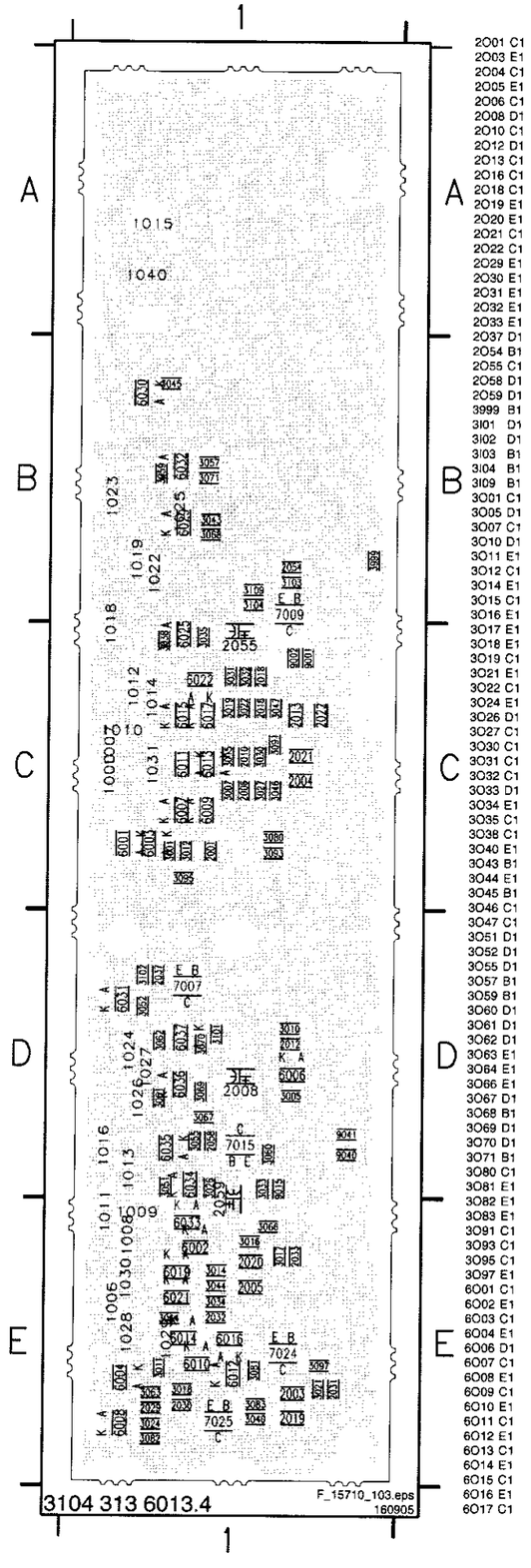

Side I/O Panel (v2)

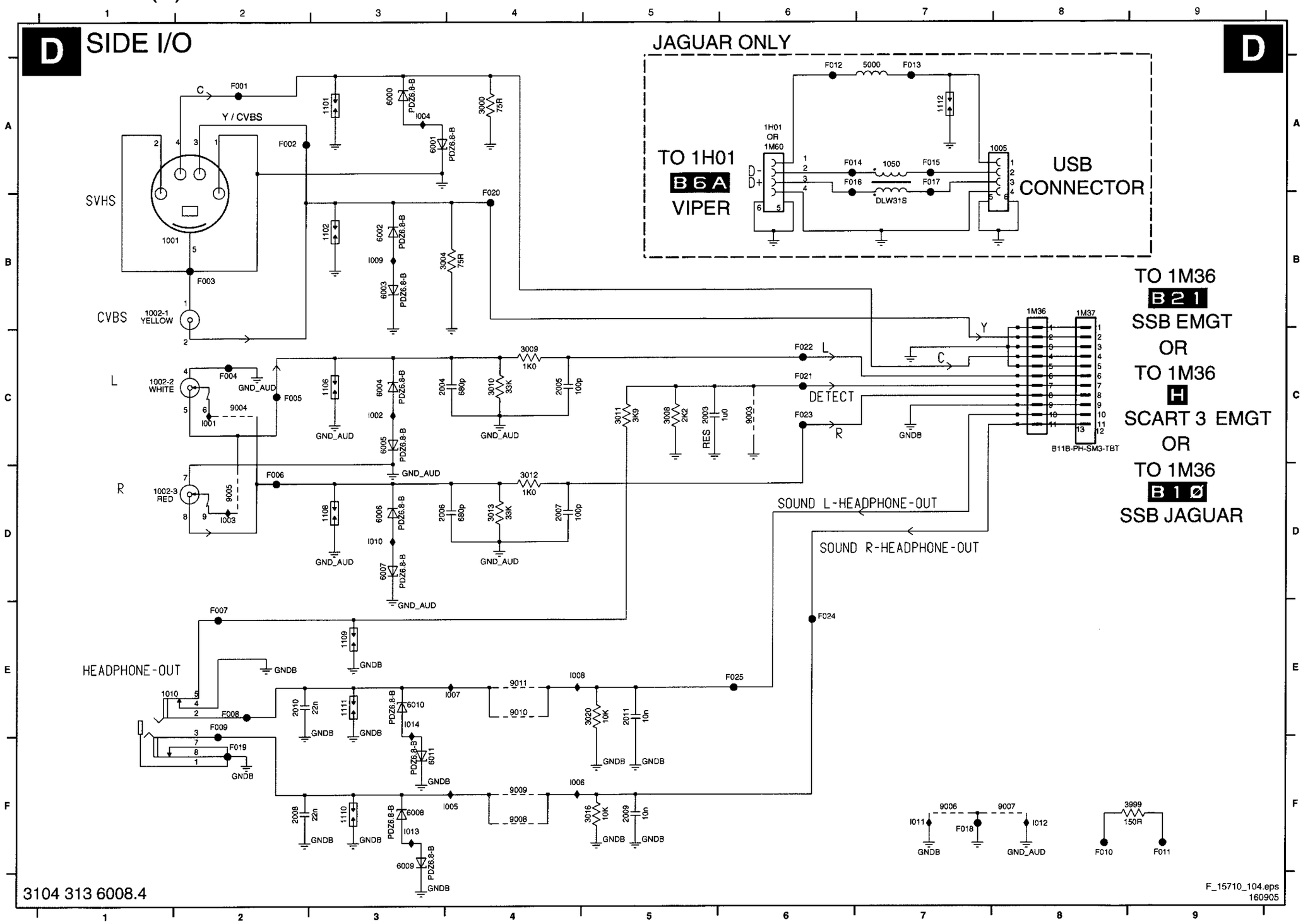

1001 B2	F002 A2
1002-1 B1	F003 B2
1002-2 C1	F004 C2
1002-3 D1	F005 C2
1005 A8	F006 D2
1010 E1	F007 E2
1050 A7	F008 E2
1101 A3	F009 E2
1102 B3	F010 F8
1106 C3	F011 F9
1108 D3	F012 A6
1109 E3	F013 A7
1110 F3	F014 A6
1111 E3	F015 A7
1112 A7	F016 A6
1H01 A6	F017 A7
1M36 B8	F018 F7
1M37 B8	F019 F2
2003 C5	F020 B4
2004 C3	F021 C6
2005 C4	F022 C6
2006 D3	F023 C6
2007 D4	F024 E6
2008 F2	F025 E6
2009 F5	I001 C2
2010 E2	I002 C3
2011 E5	I003 D2
3000 A4	I004 A3
3004 B3	I005 F4
3008 C5	I006 F4
3009 C4	I007 E4
3010 C4	I008 E4
3011 C5	I009 B3
3012 D4	I010 D3
3013 D4	I011 F7
3016 F5	I012 F8
3020 E5	I013 F3
3999 F9	I014 E3
5000 A7	
6000 A3	
6001 A3	
6002 B3	
6003 B3	
6004 C3	
6005 C3	
6006 D3	
6007 D3	
6008 F3	
6009 F3	
6010 E3	
6011 F3	
9003 C6	
9004 C2	
9005 D2	
9006 F7	
9007 F8	
9008 F4	
9009 F4	
9010 E4	
9011 E4	
F001 A2	

Layout Side I/O Panel (v2) (Top Side)

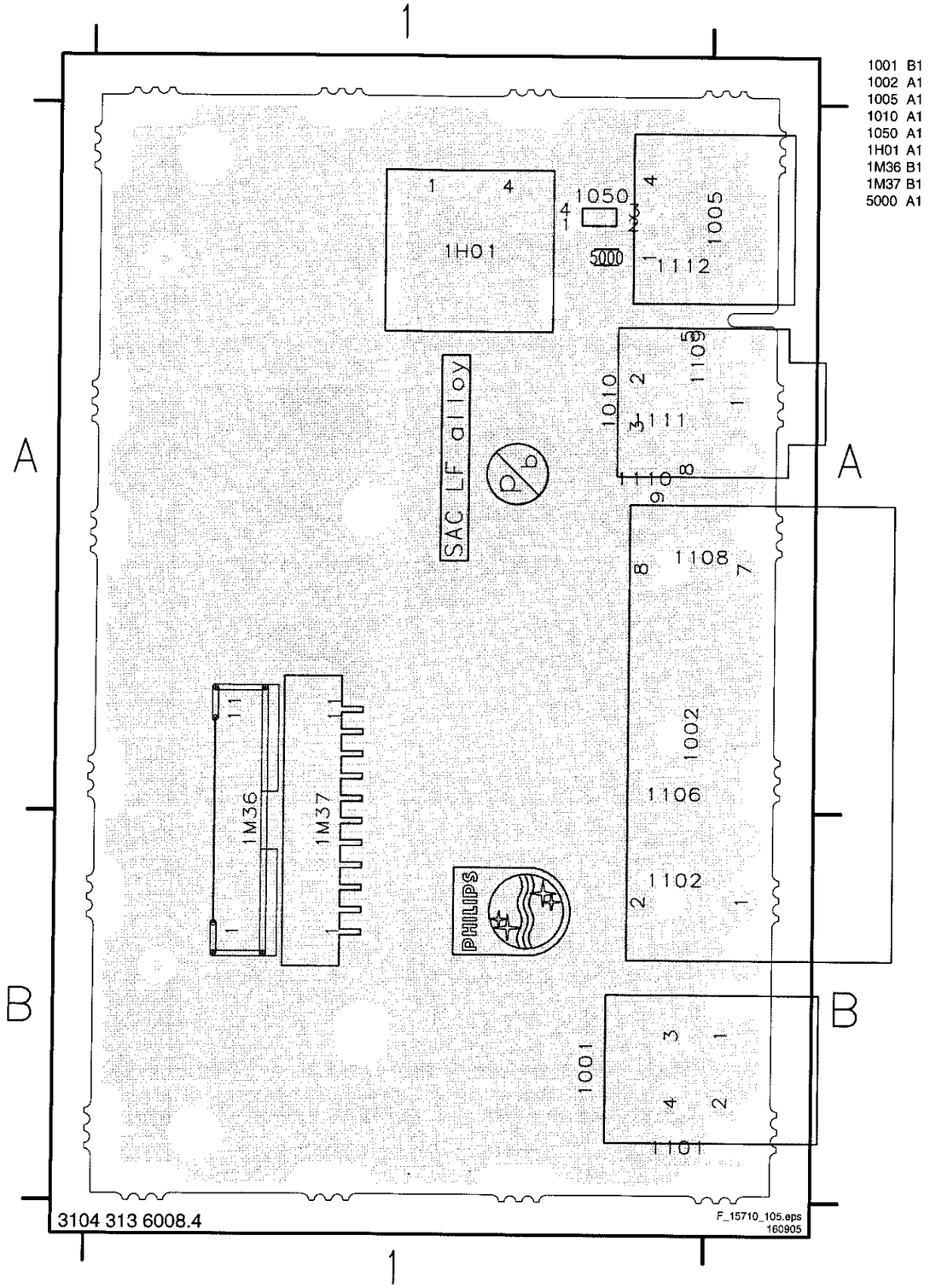

Layout Side I/O Panel (v2) (Bottom Side)

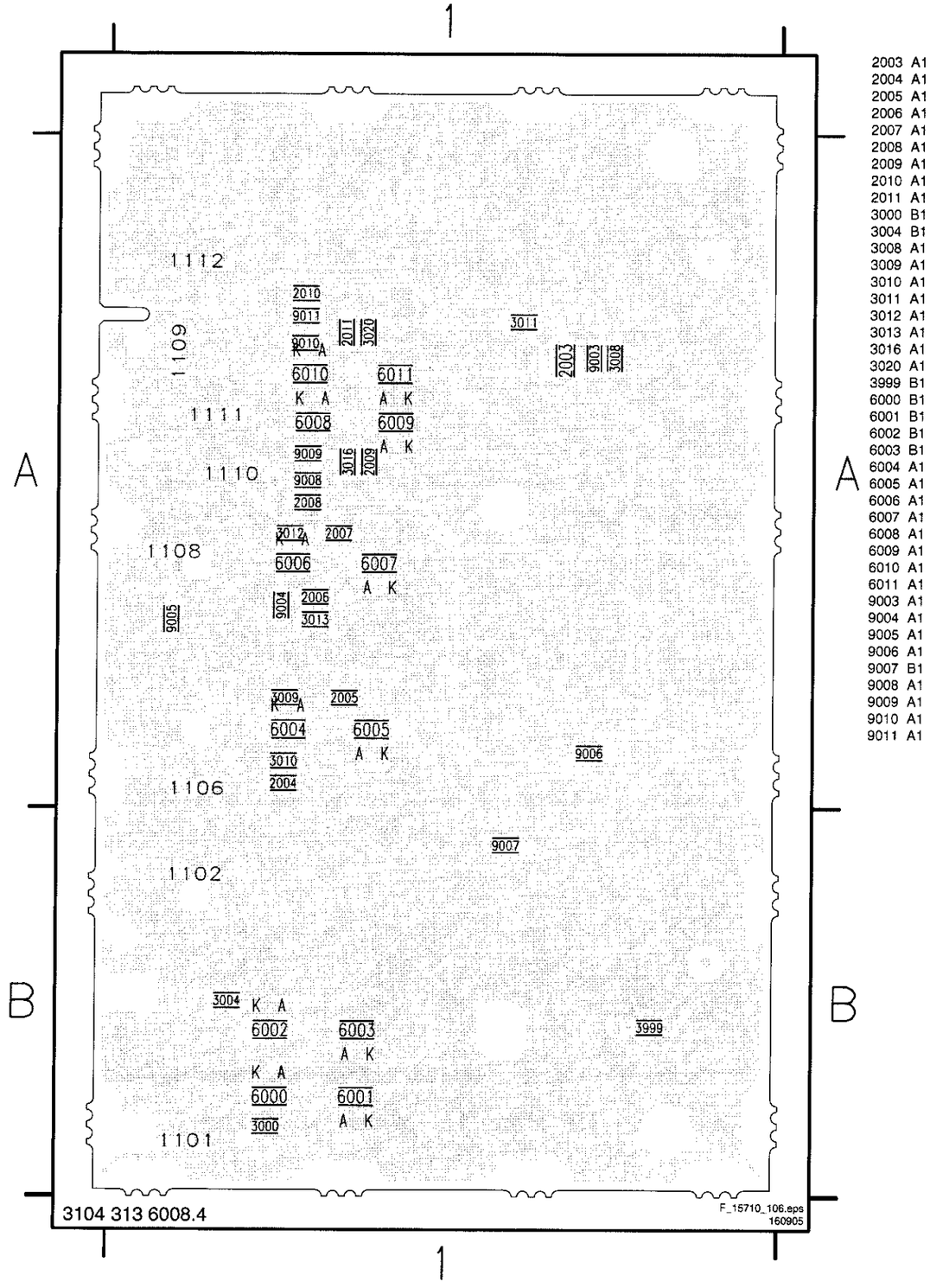

Side I/O Panel (v3)

SIDE I/O

JAGUAR ONLY

TO 1H01 B6A VIPER

USB CONNECTOR

TO 1M36 B21 SSB EMGT OR TO 1M36 H SCART 3 EMGT OR TO 1M36 B10 SSB JAGUAR

SVHS

CVBS

L

R

HEADPHONE-OUT

SOUND L-HEADPHONE-OUT

SOUND R-HEADPHONE-OUT

DETECT

B11B-PH-SM3-TBT

1001	B2	F002	A2
1002-1	B1	F003	B2
1002-2	C1	F004	C2
1002-3	D1	F005	C2
1005	A8	F006	D2
1010	E1	F007	E2
1050	A7	F008	E2
1101	A3	F009	E2
1102	B3	F010	F8
1106	C3	F011	F9
1108	D3	F012	A6
1109	E3	F013	A7
1110	F3	F014	A6
1111	E3	F015	A7
1112	A7	F016	A6
1H01	A6	F017	A7
1M36	B8	F018	F7
1M37	B8	F019	F2
2003	C5	F020	B4
2004	C3	F021	C6
2005	C4	F022	C6
2006	D3	F023	C6
2007	D4	F024	E6
2008	F2	F025	E6
2009	F5	I001	C2
2010	E2	I002	C3
2011	E5	I003	D2
3000	A4	I004	A3
3004	B3	I005	F4
3008	C5	I006	F4
3009	C4	I007	E4
3010	C4	I008	E4
3011	C5	I009	B3
3012	D4	I010	D3
3013	D4	I011	F7
3016	F5	I012	F8
3020	E5	I013	F3
3999	F9	I014	E3
5000	A7		
6000	A3		
6001	A3		
6002	B3		
6003	B3		
6004	C3		
6005	C3		
6006	D3		
6007	D3		
6008	F3		
6009	F3		
6010	E3		
6011	F3		
9003	C6		
9004	C2		
9005	D2		
9006	F7		
9007	F8		
9008	F4		
9009	F4		
9010	E4		
9011	E4		
F001	A2		

3104 313 6008.5

F_15710_107.eps 160905

Layout Side I/O Panel (v3) (Top Side)

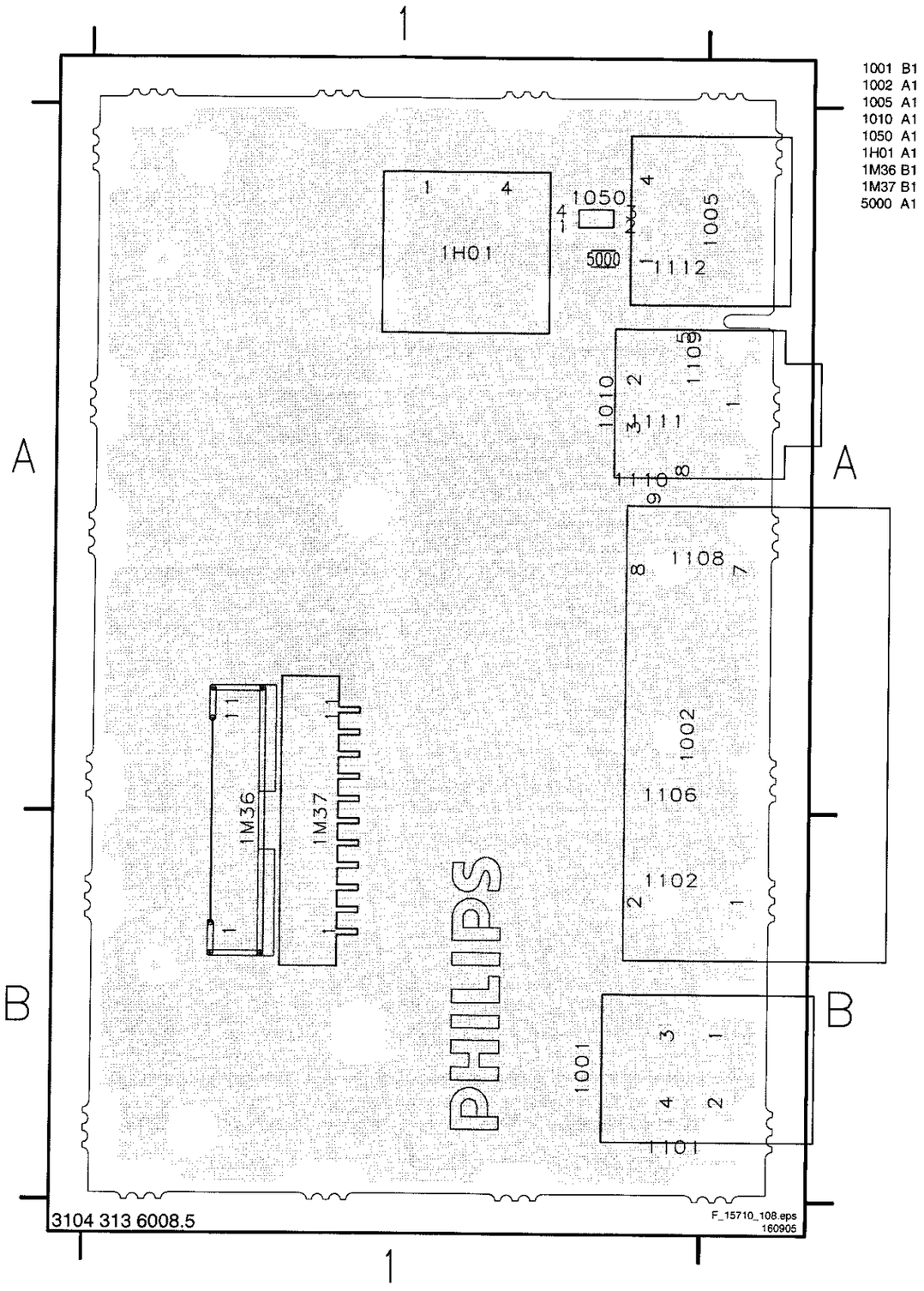

Layout Side I/O Panel (v3) (Bottom Side)

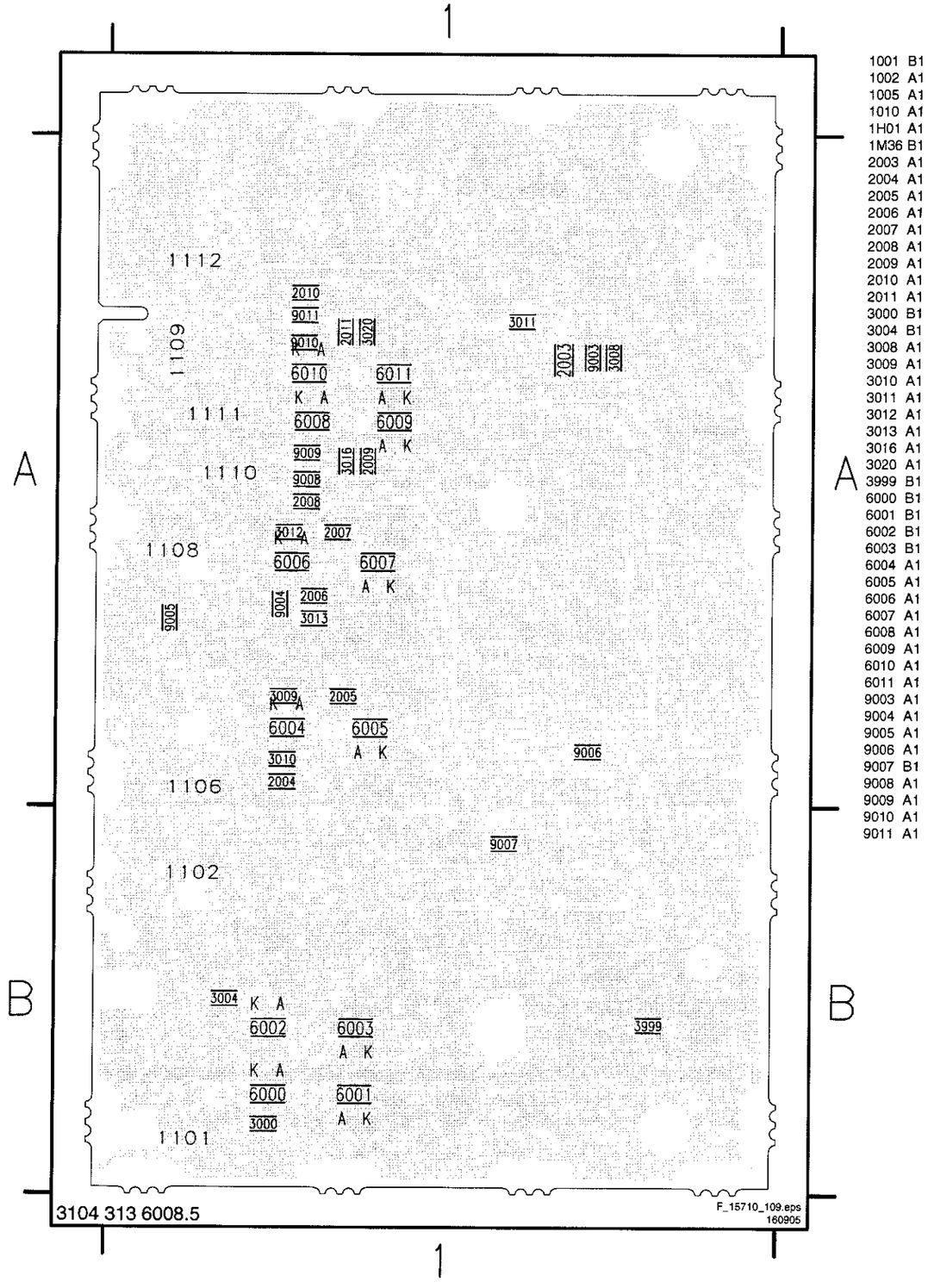

Control Board (Top Control)

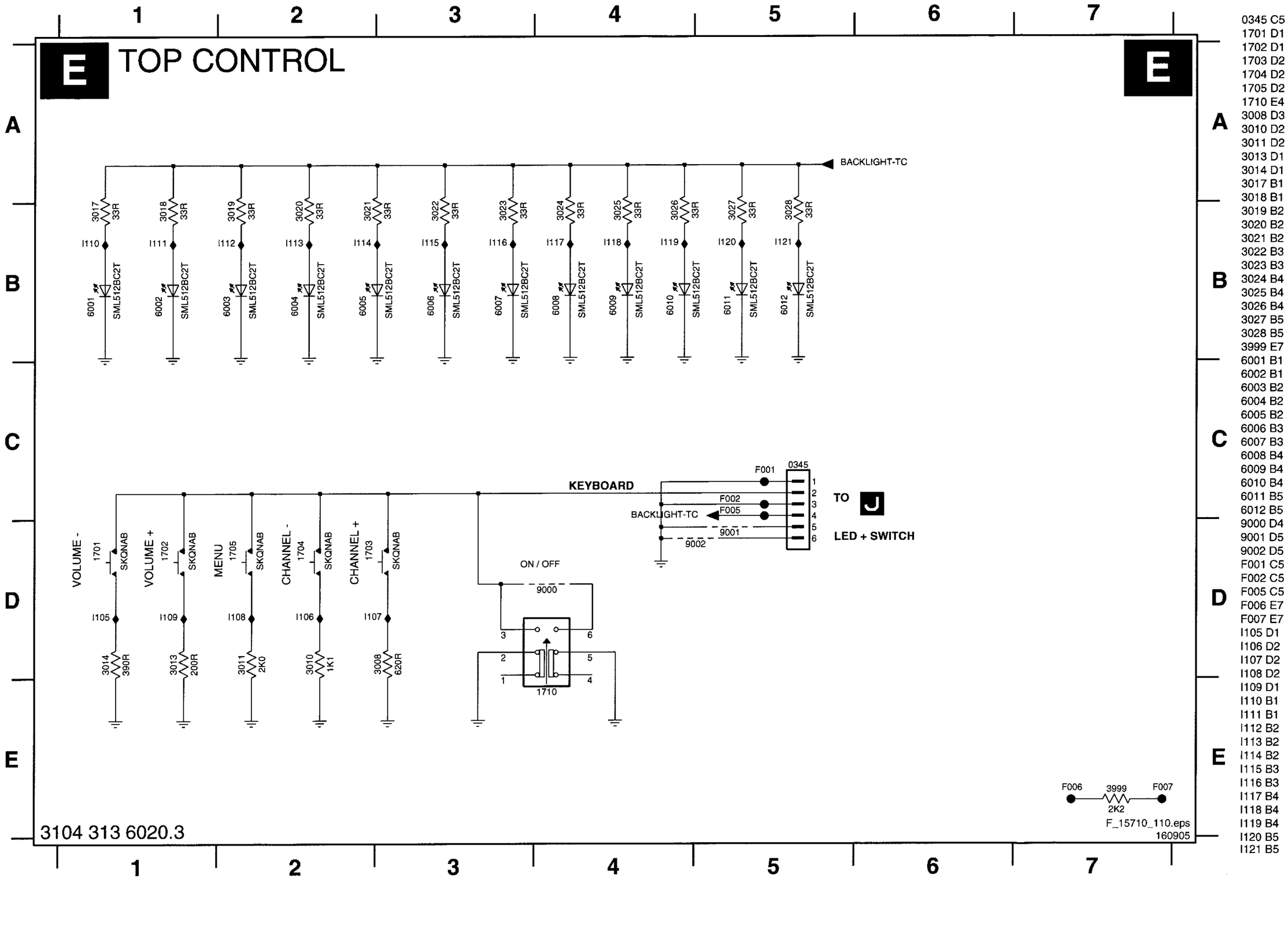

0345 C5
1701 D1
1702 D1
1703 D2
1704 D2
1705 D2
1710 E4
3008 D3
3010 D2
3011 D2
3013 D1
3014 D1
3017 B1
3018 B1
3019 B2
3020 B2
3021 B2
3022 B3
3023 B3
3024 B4
3025 B4
3026 B4
3027 B5
3028 B5
3999 E7
6001 B1
6002 B1
6003 B2
6004 B2
6005 B2
6006 B3
6007 B3
6008 B4
6009 B4
6010 B4
6011 B5
6012 B5
9000 D4
9001 D5
9002 D5
F001 C5
F002 C5
F005 C5
F006 E7
F007 E7
I105 D1
I106 D2
I107 D2
I108 D2
I109 D1
I110 B1
I111 B1
I112 B2
I113 B2
I114 B2
I115 B3
I116 B3
I117 B4
I118 B4
I119 B4
I120 B5
I121 B5

Layout Control Board (Top Side)

0345 -- 1702 -- 1704 -- 1710 -- 3010 -- 3013 -- 3017 -- 3019 -- 3021 -- 3023 -- 3025 -- 3027 -- 3999 -- 6002 -- 6004 -- 6006 -- 6008 -- 6010 -- 6012 -- 9001 --
1701 -- 1703 -- 1705 -- 3008 -- 3011 -- 3014 -- 3018 -- 3020 -- 3022 -- 3024 -- 3026 -- 3028 -- 6001 -- 6003 -- 6005 -- 6007 -- 6009 -- 6011 -- 9000 -- 9002 --

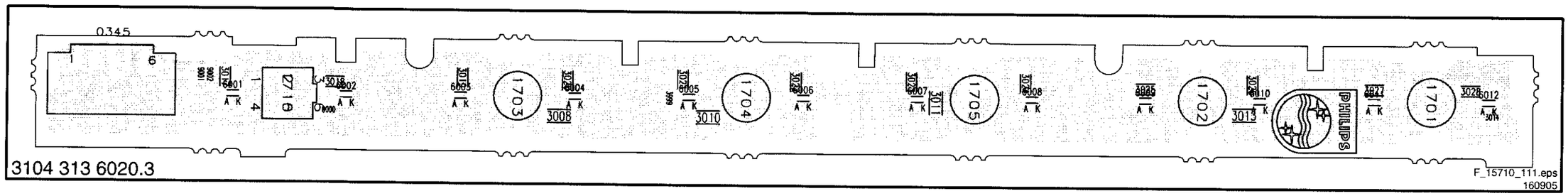

Layout Control Board (Bottom Side)

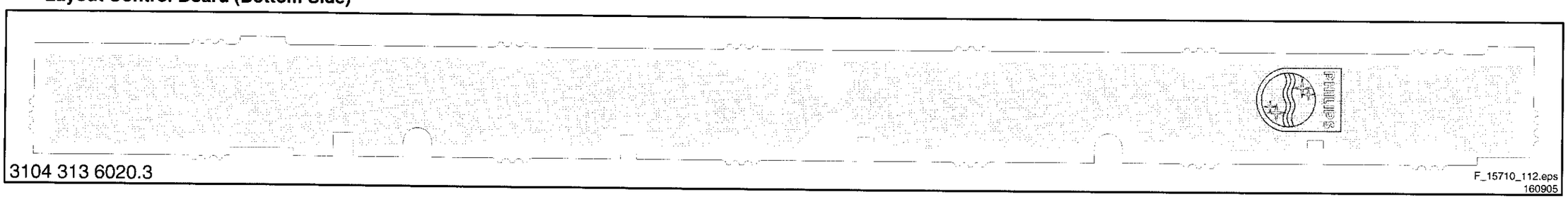

LED Panel

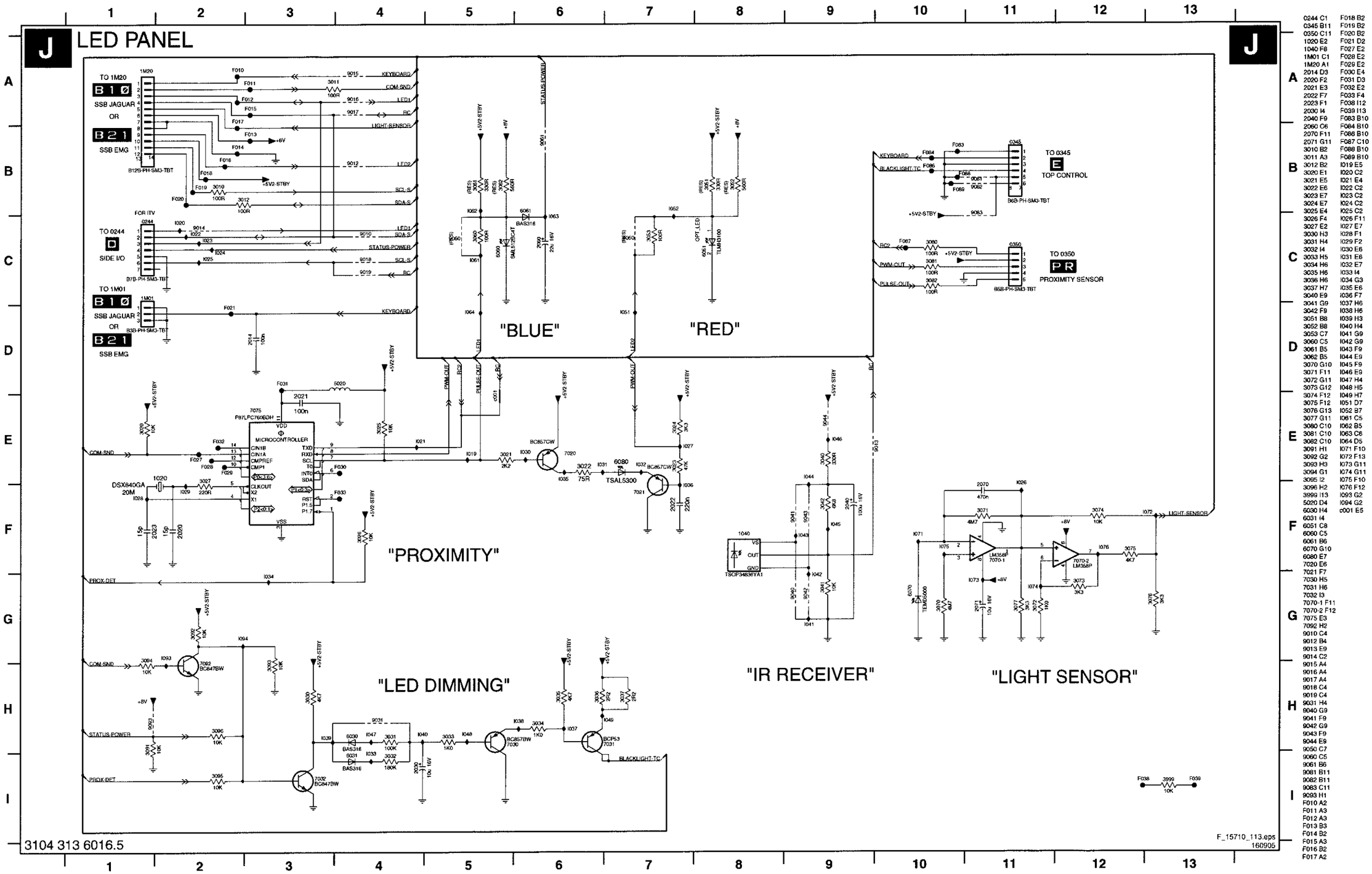

0244 C1
0345 B11
0350 C11
1020 E2
1040 F8
1M01 C1
1M20 A1
2014 D3
2020 F2
2021 E3
2022 F7
2023 F1
2030 I4
2040 F9
2060 C6
2070 F11
2071 G11
3010 B2
3011 A3
3012 B2
3020 E1
3021 E5
3022 E6
3023 E7
3024 E7
3025 E4
3026 F4
3027 E2
3030 H3
3031 H4
3032 I4
3033 H5
3034 H6
3035 H6
3036 H6
3037 H7
3040 E9
3041 G9
3042 F9
3051 B8
3052 B8
3053 C7
3060 C5
3061 B5
3062 B5
3070 G10
3071 F11
3072 G11
3073 G12
3074 F12
3075 F12
3076 G13
3077 G11
3080 C10
3081 C10
3082 C10
3091 H1
3092 G2
3093 H3
3094 G1
3095 I2
3096 H2
3999 I13
5020 D4
6030 H4
6031 I4
6051 C8
6060 C5
6061 B6
6070 G10
6080 E7
7020 E6
7021 F7
7030 H5
7031 H6
7032 I3
7070-1 F11
7070-2 F12
7075 E3
7092 H2
9010 C4
9012 B4
9013 E9
9014 C2
9015 A4
9016 A4
9017 A4
9018 C4
9019 C4
9031 H4
9040 G9
9041 F9
9042 G9
9043 F9
9044 E9
9050 C7
9060 C5
9061 B6
9081 B11
9082 B11
9083 C11
9093 H1
F010 A2
F011 A3
F012 A3
F013 B3
F014 B2
F015 A3
F016 B2
F017 A2
F018 B2
F019 B2
F020 B2
F021 D2
F027 E2
F028 E2
F029 E2
F030 E4
F031 D3
F032 E2
F033 F4
F038 I12
F039 I13
F083 B10
F084 B10
F086 B10
F087 C10
F088 B10
F089 B10
I019 E5
I020 C2
I021 E4
I022 C2
I023 C2
I024 C2
I025 C2
I026 F11
I027 E7
I028 F1
I029 F2
I030 E6
I031 E6
I032 E7
I033 I4
I034 G3
I035 E6
I036 F7
I037 H6
I038 H6
I039 H3
I040 H4
I041 G9
I042 G9
I043 F9
I044 E9
I045 F9
I046 E9
I047 H4
I048 H5
I049 H7
I051 D7
I052 B7
I061 C5
I062 B5
I063 C6
I064 D5
I071 F10
I072 F13
I073 G11
I074 G11
I075 F10
I076 F12
I093 G2
I094 G2
c001 E5

Layout LED Panel (Top Side)

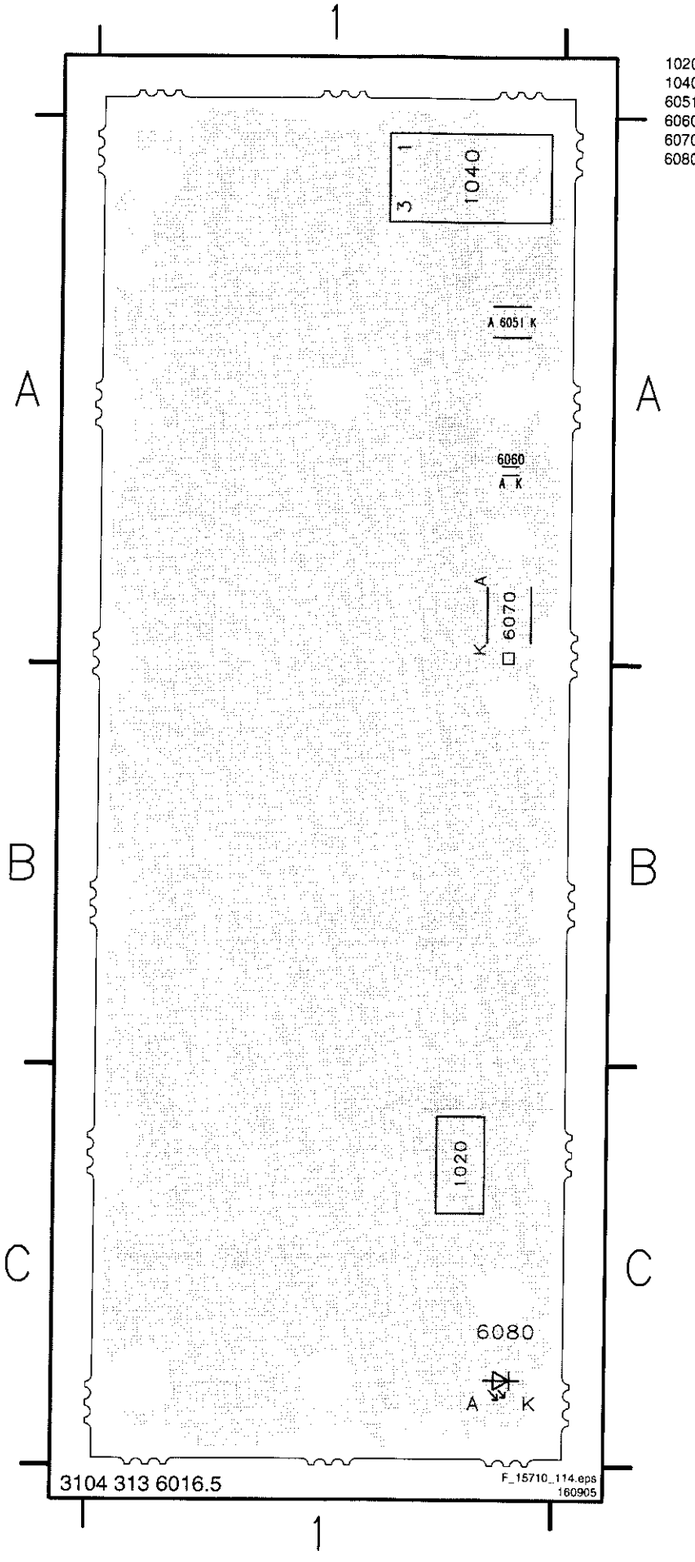

1020 C1
1040 A1
6051 A1
6060 A1
6070 A1
6080 C1

Layout LED Panel (Bottom Side)

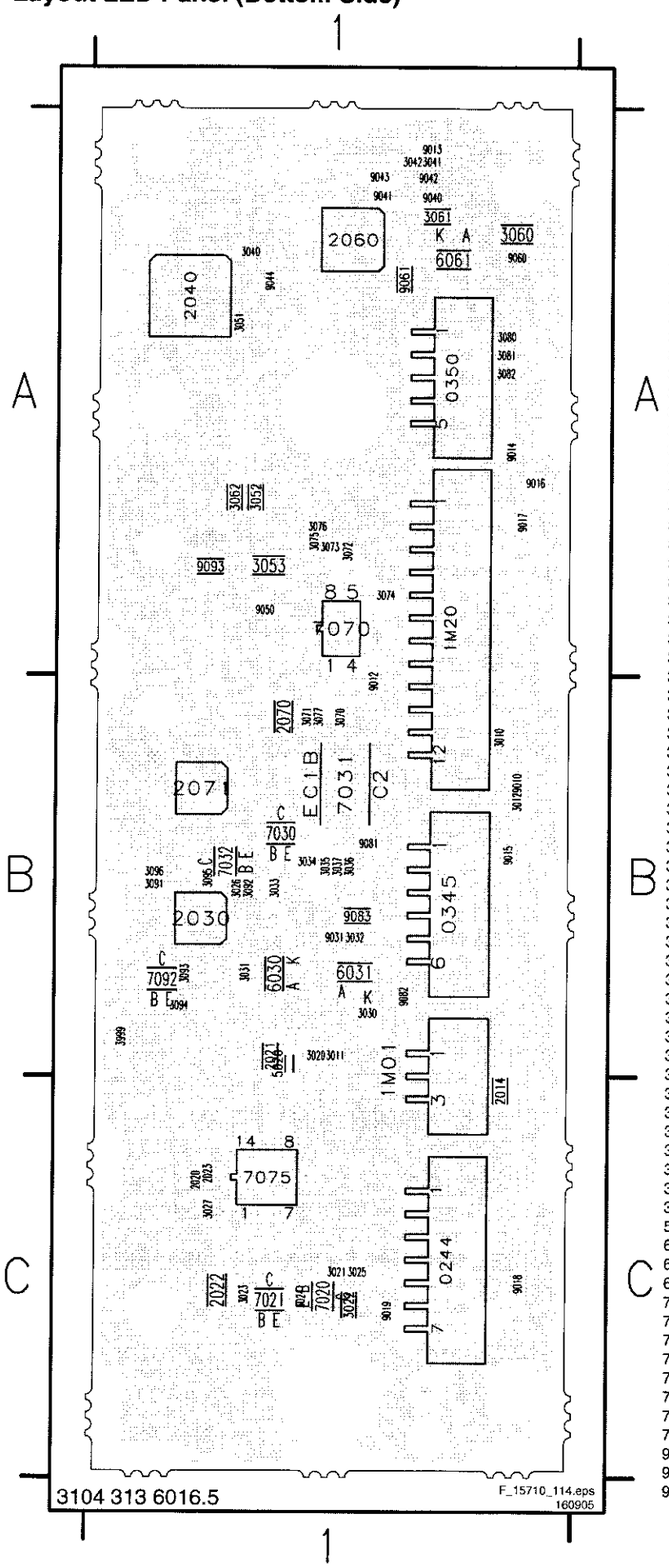

0244 C1
0345 B1
0350 A1
1M01 B1
1M20 A1
2014 C1
2020 C1
2021 B1
2022 C1
2023 C1
2030 B1
2040 A1
2060 A1
2070 B1
2071 B1
3010 B1
3011 B1
3012 B1
3020 B1
3021 C1
3022 C1
3023 C1
3024 C1
3025 C1
3026 B1
3027 C1
3030 B1
3031 B1
3032 B1
3033 B1
3034 B1
3035 B1
3036 B1
3037 B1
3040 A1
3041 A1
3042 A1
3051 A1
3052 A1
3053 A1
3060 A1
3061 A1
3062 A1
3070 B1
3071 B1
3072 A1
3073 A1
3074 A1
3075 A1
3076 A1
3077 B1
3080 A1
3081 A1
3082 A1
3091 B1
3092 B1
3093 B1
3094 B1
3095 B1
3096 B1
3999 B1
5020 B1
6030 B1
6031 B1
6061 A1
7020 C1
7021 C1
7030 B1
7031 B1
7032 B1
7070 A1
7075 C1
7092 B1
9010 B1
9012 B1
9013 A1
9014 A1
9015 B1
9016 A1
9017 A1
9018 C1
9019 C1
9031 B1
9040 A1
9041 A1
9042 A1
9043 A1
9044 A1
9050 A1
9060 A1
9061 A1
9081 B1
9082 B1
9083 B1
9093 A1

Standby/Audio Panel: Connections

SA1 CONNECTIONS

SA1

TO DISPLAY 1316 B12P-PH-K
TO DISPLAY 1317 B12P-PH-K
1318 B6B-PH-K
+5V_SW +5V_SW 9008 9009 RES
F137 F138 GND-SSP
9002 RES 9003 RES
GND-SSP GND-SSP
F105 F104
DIM_CONTROL ON_OFF
SA1 (3x)
DIM_CONTROL SA1 (3x) ON_OFF SA1 (3x)
F111 F113 F115
POR SA2
+5V_SW 9113 I551
STANDBY F121
PROT_AUDIOSUPPLY F139
F122 +5V2-RELAY-IO2_PWM
DRIVE_AMBILIGHT
1M03 B10P-PH-K-S
TO 1M46 B FTV 2.X BL 2.X JL 2.X LC 4.X
TO DISPLAY 1319 B14B-PH-K
9012 I550 9014 9013
TO 1303 A LCD SUPPLY 42"
1303 B4P-VH +24V_2 F103
1320 B3P-VH
TO 1320 A LCD SUPPLY 42"
6516 BAS316 I525
3526 470R
F140 F110
1M10 B4B-PH-K
TO 1M10 AL AMBI LIGHT
VTUN 100K 3525
BZX384-C15 6515
BSP030 7515
I524
9106
F101 +12V_+24V
1304 B4P-VH
9018
F108 +12V_A
TO 1304 A LCD SUPPLY 30"/37"/42"
2517 4u7 50V
220K 3520
3527 100R
9004 5018 68u 9010
9005 5019 68u 9011
9006 9007
F119 F120
3190 1K2 3191 1K2 3192 1K2
GND-SSP

TO DISPLAY 1314 B10P-PH-K-S
TO DISPLAY 1315 B10P-PH-K-S
GND-SSP
1M46 B11B-PH-K
F131 GND-SSP
+8V6 F135
+12V F136
+5V_SW F109
GND-SSP +5V2 F132
VTUN F114
+12V 9001 F117
TO 1M46 B FTV 2.X BL 2.X JL 2.X LC 4.X
1M63 B2B-PH-K +5V_SW GND-SSP
1309 B3P-VH F112 GND-SSP
TO 1309 A LCD SUPPLY 30"/32"/37"/42"
0001 GND screw GND-SSP
0002 GND screw GND-SSP
0003 GND screw GND-SSP
1M49 B4B-PH-K I552 I553 I554 I555 1K49 B4B-PH-K
1D40 B5B-PH-K I556 I557 I558 I559 I560 1D42 B5B-PH-K

8204 000 8450.4
F_15710_116.eps 160905

0001 F4	F140 B8
0002 F4	I524 C8
0003 F5	I525 C7
1303 B7	I550 C6
1304 C8	I551 C4
1309 E7	I552 F6
1314 E1	I553 F6
1315 E2	I554 F6
1316 B1	I555 F6
1317 B2	I556 F7
1318 B3	I557 F8
1319 B6	I558 F7
1320 B7	I559 F8
1D40 F7	I560 F7
1D42 F8	
1K49 F6	
1M03 B5	
1M10 B9	
1M46 E4	
1M49 F6	
1M63 E6	
2517 C7	
3190 E7	
3191 E7	
3192 E7	
3520 C8	
3525 C7	
3526 C7	
3527 D7	
5018 D6	
5019 D6	
6515 B8	
6516 C7	
7515 C8	
9001 F3	
9002 C3	
9003 C3	
9004 C6	
9005 D6	
9006 D7	
9007 D7	
9008 B3	
9009 B3	
9010 D6	
9011 E6	
9012 C5	
9013 C5	
9014 C6	
9016 B8	
9018 C9	
9113 C4	
F101 C9	
F103 B7	
F104 C3	
F105 C3	
F108 C9	
F109 E3	
F110 B8	
F111 B4	
F112 E7	
F113 B5	
F114 E3	
F115 C4	
F117 F3	
F119 D6	
F120 D6	
F121 C4	
F122 C5	
F131 E3	
F132 E3	
F135 E3	
F136 E3	
F137 B3	
F138 B3	
F139 C4	

Standby/Audio Panel: Standby

SA2 STANDBY

HOT GROUND

COLD GROUND

TO 1306 A LCD SUPPLY 30"/32"/37"/42"

TO 1307 A LCD SUPPLY 30"/32"/37"/42"

TO 1305 A 1 LCD SUPPLY 30"/37"/42"

8204 000 8450.4

F_15710_117.eps 160905

1301 B1	3506 H11	7511 A8	I186 G6
1305 D13	3507 F13	7512 A10	I187 D11
1306 B3	3508 G13	7513 B7	I188 D9
1307 H3	3509 A7	7514 A9	I189 H10
1310 A13	3510 F12	7531 E10	I190 G1
1311 A12	3511 C6	7532 D9	I191 G4
2101 C1	3512 C9	7560 E12	I192 H9
2102 F1	3513 D8	9015 E11	I197 C9
2103 D2	3514 A7	9019 A7	I198 D7
2105 D2	3515 A8	9020 C3	I199 D4
2107 B4	3516 A9	9021 B3	I501 F6
2108 B4	3517 A11	9022 B3	I502 F6
2109 F7	3518 A7	9023 C2	I503 F6
2110 G2	3519 A8	9024 D13	I504 G12
2111 E2	3521 B7	9110 H9	I505 F12
2112 E3	3522 A9	9111 D1	I506 F13
2115 E6	3523 A9	9112 E9	I507 F13
2118 D7	3524 A10	9120 B11	I508 A8
2123 E4	3528 C11	9121 B12	I509 A9
2124 H2	3529 C11	F100 E4	I510 A9
2125 B6	3530 D13	F123 B3	I511 A10
2131 C10	3531 D13	F124 B3	I512 H9
2132 C10	3532 C12	F125 E12	I513 D1
2140 G8	3533 D12	F126 E12	I514 E6
2141 D7	3534 H8	F127 H3	I515 E9
2143 D7	3535 H9	F128 H4	I516 D9
2144 F2	3536 H10	F129 H4	I517 C13
2145 D3	3537 H9	F130 H4	I518 B7
2149 G7	3538 F8	F133 H7	I519 B8
2150 H5	3539 H10	F134 H8	I520 A8
2152 B4	3540 G12	I100 B4	I521 A8
2153 F5	3541 G12	I101 B6	I522 A9
2154 G9	3542 H12	I102 B6	I523 A9
2159 E2	3543 D12	I103 C9	
2162 C9	3544 G12	I104 C9	
2162 D2	3560 E11	I105 B6	
2153 G1	3561 F12	I106 C10	
2503 D10	3562 E12	I107 C8	
2506 D5	3999 H7	I108 C8	
2507 C6	5102 E1	I109 C11	
2508 C6	5103 E6	I110 G2	
2509 G13	5104 C5	I111 C3	
2510 E7	5105 D5	I112 C9	
2511 B9	5106 D1	I113 C4	
2512 E9	5108 D4	I114 C6	
2513 E7	5110 B6	I115 C11	
2515 A10	5112 D6	I116 C10	
2516 A8	5115 B8	I117 C12	
2522 A9	5500 C5	I118 C5	
2523 A9	5501 B3	I119 C4	
2533 F11	5504 B3	I120 C6	
2534 E8	5505 B4	I121 C12	
2535 D9	5506 E8	I122 C1	
2536 D11	5507 B10	I123 C6	
2537 D13	5508 E9	I124 C5	
2538 H9	6103 C1	I125 D8	
2539 E8	6104 E2	I126 D9	
2540 H12	6105 D3	I127 B8	
2544 G12	6106 F2	I128 D7	
3100 G3	6107 E7	I129 D7	
3101 D2	6108 G2	I130 C3	
3102 E2	6109 A8	I131 C2	
3103 D2	6110 A8	I132 D4	
3104 D3	6113 C7	I133 D4	
3105 D2	6114 G1	I134 D2	
3106 E1	6115 D3	I135 D9	
3107 F1	6116 F4	I136 D2	
3108 D4	6117 C2	I137 E7	
3109 F1	6118 C2	I138 E7	
3110 G1	6119 C3	I139 E12	
3111 D1	6120 G7	I140 C1	
3112 G1	6121 G7	I141 D2	
3113 E7	6122 F7	I142 D2	
3114 F6	6125 B8	I143 D2	
3115 E6	6130 C9	I144 D2	
3116 A7	6132 C9	I145 D3	
3117 D3	6133 D8	I146 D4	
3118 A7	6134 C9	I147 E1	
3122 B6	6140 D6	I148 E10	
3123 F7	6142 F2	I149 E7	
3124 F7	6144 E3	I150 E12	
3125 F3	6147 D4	I151 E12	
3126 F3	6148 F8	I152 F12	
3127 F3	6149 F9	I153 E1	
3128 F6	6150 G4	I154 E4	
3132 D9	6151 G4	I155 E3	
3134 C10	6153 H5	I156 E4	
3135 C9	6156 G5	I157 F6	
3137 B8	6503 D9	I158 F7	
3138 E2	6504 B6	I159 F8	
3139 B8	6505 E7	I160 F7	
3140 C8	6508 H9	I161 F9	
3141 F9	6510 C13	I162 E1	
3142 G8	6511 A8	I163 F8	
3145 G2	6513 A8	I164 F7	
3146 F4	6514 B7	I165 G7	
3147 H2	6517 A7	I166 F3	
3148 E4	6531 F10	I167 F3	
3149 E4	6532 C11	I168 G9	
3150 D4	6540 F12	I169 F1	
3152 E3	6562 F12	I170 G7	
3153 C8	7100 F3	I171 F5	
3155 G4	7101 D3	I172 F2	
3156 G5	7102 C4	I173 F2	
3157 H5	7105 F4	I174 F2	
3158 G6	7131 B9	I175 F4	
3159 E8	7140 G10	I176 G7	
3160 D3	7150 G5	I177 F1	
3161 C9	7501 F6	I178 G13	
3171 C9	7503 D10	I179 G12	
3172 C10	7506 G12	I180 G4	
3175 G8	7506 C11	I181 G1	
3176 G9	7507 C12	I182 G12	
3502 C9	7508 H10	I183 G5	
3503 D11	7509 H12	I184 G5	
3504 D11	7510 F13	I185 F3	

Standby/Audio Panel: Audio

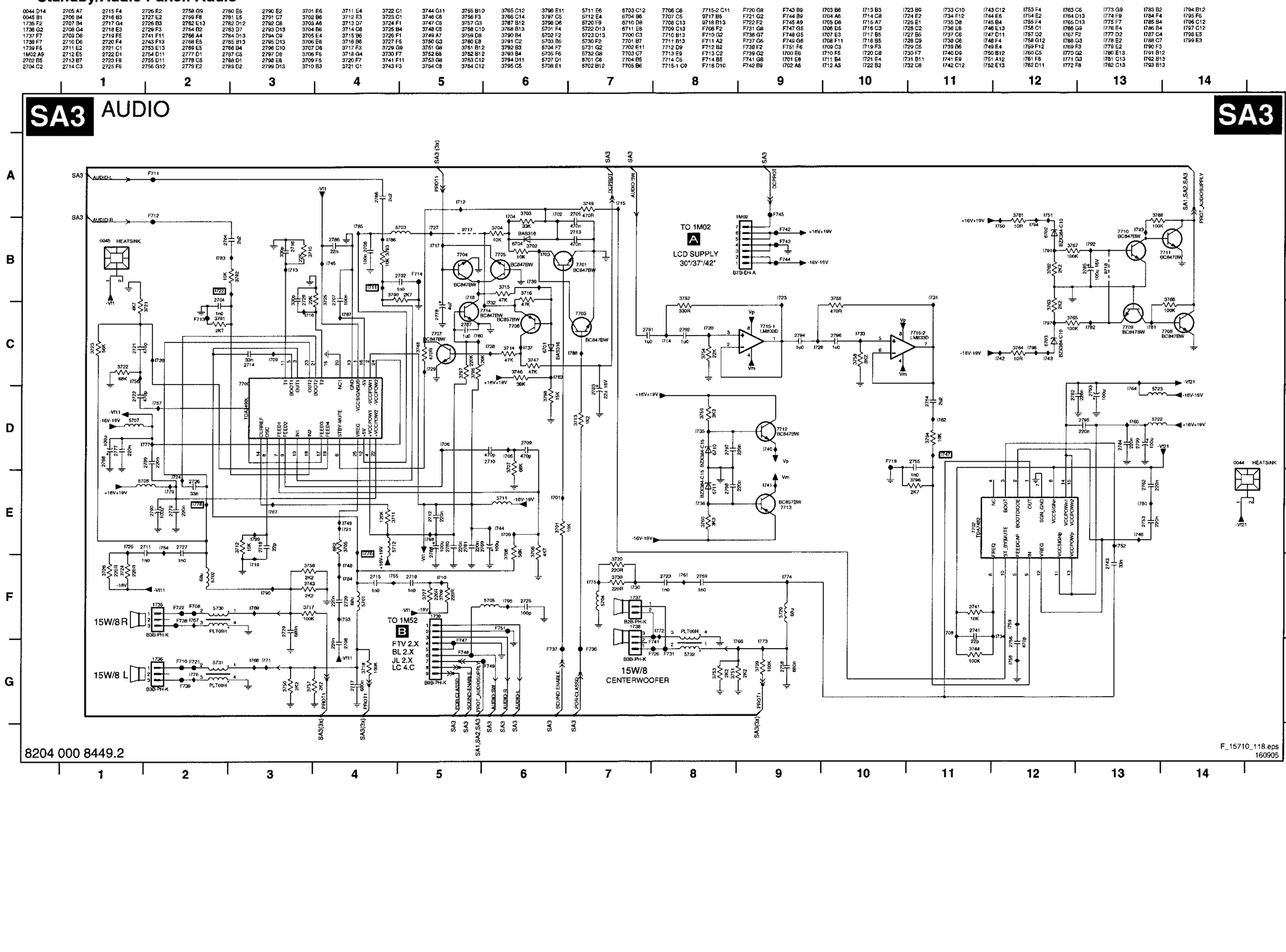

Layout Standby/Audio Panel (Top Side)

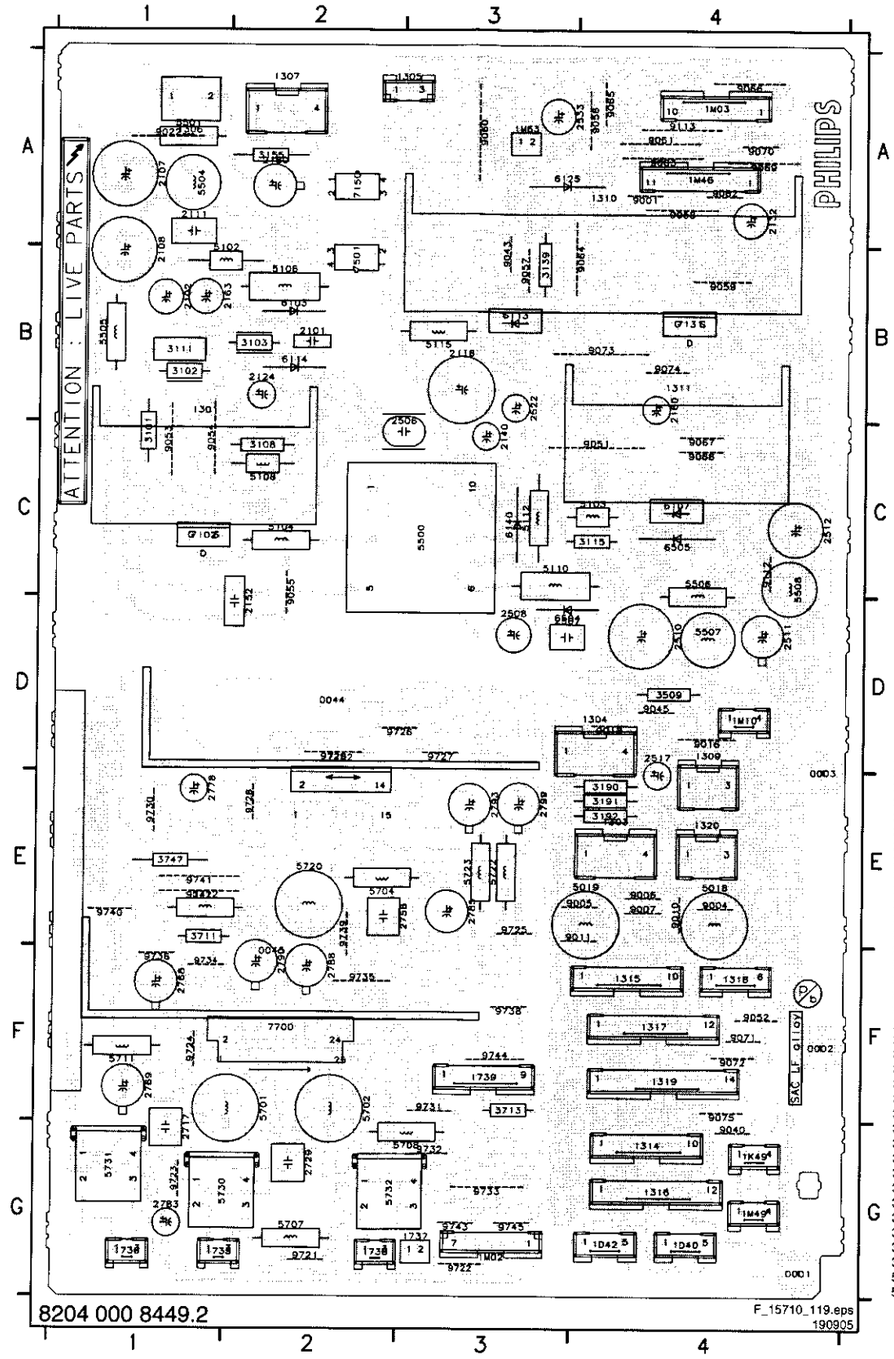

0001	G4	5102	B2	9725	E3	2163	B1	9010	E4	3509	D4
0002	F4	5103	C4	9726	D2	2506	B2	9011	E4	3711	F1
0003	D4	5104	C2	9727	D3	2507	D3	9016	D4	3713	F3
0044	D1	5106	B2	9728	E2	2508	D3	9018	D4	3747	E1
0045	E1	5108	C2	9729	D2	2510	D4	9022	A1	5018	E4
1301	C1	5110	C3	9730	E1	2511	D4	9040	G4	5019	E4
1303	E4	5112	C3	9731	F3	2512	C4	9043	B3		
1304	D4	5115	B3	9732	G3	2517	D4	9045	D4		
1305	A3	5500	C3	9733	G3	2522	B3	9051	C4		
1306	A1	5501	A1	9734	F1	2533	A4	9052	F4		
1307	A2	5504	A1	9735	F3	2717	F1	9053	B1		
1309	D4	5505	B1	9736	F1	2729	G2	9054	B1		
1310	A3	5506	C4	9738	F3	2758	E3	9055	C2		
1311	B4	5507	D4	9739	F2	2768	F1	9056	A4		
1314	G4	5508	C4	9740	E1	2769	F1	9057	A3		
1315	F4	5701	F2	9741	E1	2778	E1	9058	A4		
1316	G4	5702	F2	9742	E1	2783	G1	9059	B4		
1317	F4	5704	E2	9743	G3	2785	E3	9060	A3		
1318	F4	5707	G2	9744	F3	2788	F2	9061	A4		
1319	F4	5708	G3	9745	G3	2790	E2	9062	A4		
1320	E4	5711	F1			2793	E3	9063	A4		
1735	G1	5712	E1			2799	E3	9064	A3		
1736	G1	5720	E2			3101	C1	9065	A4		
1737	G3	5722	E3			3102	B1	9066	A4		
1738	G2	5723	E3			3103	B2	9067	C4		
1739	F3	5730	G2			3108	C2	9068	C4		
1D40	G4	5731	G1			3111	B1	9069	A4		
1D42	G4	5732	G3			3115	C4	9070	A4		
1K49	G4	6103	B2			3139	B3	9071	F4		
1M02	G3	6107	C4			3155	A2	9072	F4		
1M03	A4	6113	B3			3190	E3	9073	B4		
1M10	D4	6114	B2			3191	E3	9074	B4		
1M46	A4	6125	A3			3192	E3	9075	F4		
1M49	G4	6140	C3			3509	D4	9112	C4		
1M63	A3	6504	D3			3711	F1	9113	A4		
2101	B2	6505	C4			3713	F3	9721	G2		
2102	B1	7102	C1			3747	E1	9722	G3		
2107	A1	7131	B4			5018	E4	9723	G1		
2108	A1	7150	A2			5019	E4	9724	F1		
2111	A1	7501	B2								
2118	B3	7700	F2								
2124	B2	7702	D2								
2132	A4	9001	A4								
2140	C3	9004	E4								
2150	A2	9005	E4								
2152	D2	9006	E4								
2160	B4	9007	E4								

Layout Standby/Audio Panel (Overview Bottom Side)

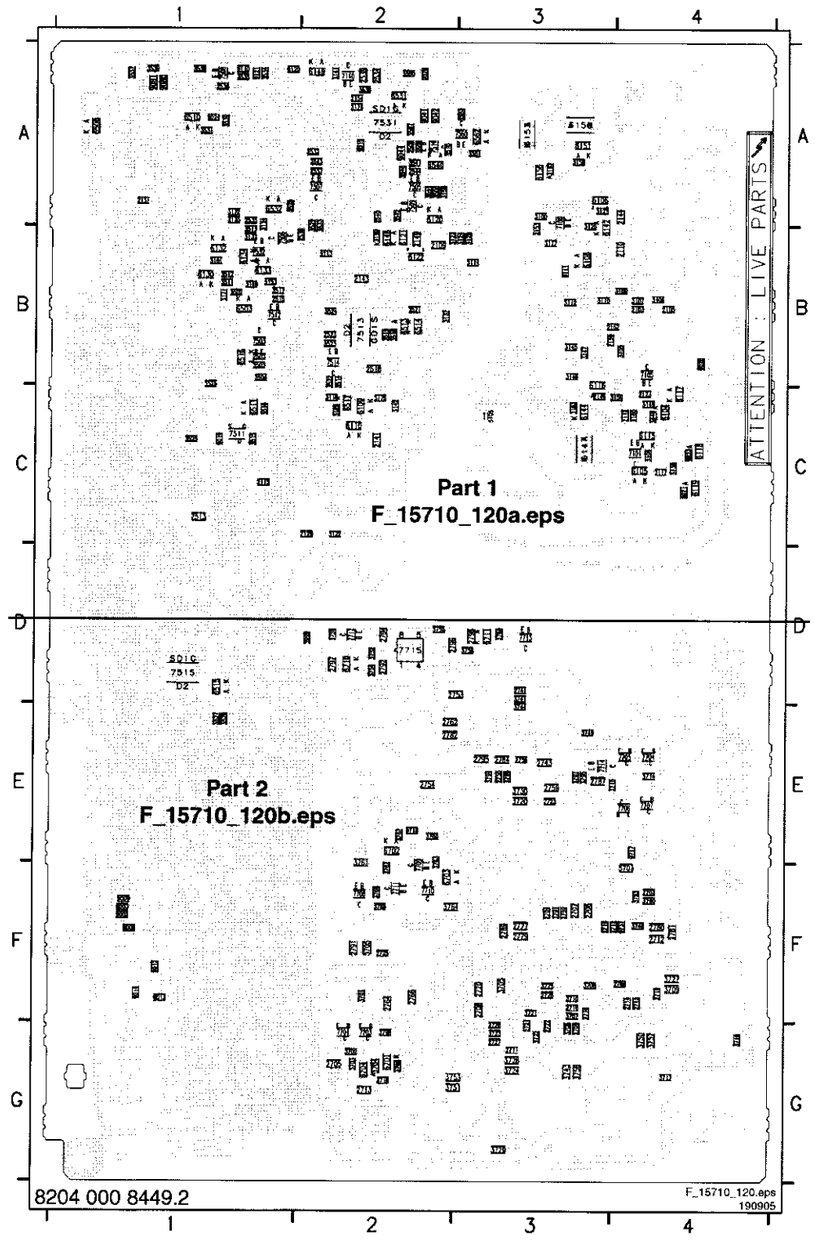

2103	B4	3110	B3	3705	F3	6508	A1	2794	D2	3541	A2
2105	B4	3112	B3	3706	G3	6510	A1	2795	E3	3542	A2
2109	B2	3113	B2	3707	F3	6511	C1	2796	D2	3543	A2
2110	B4	3114	B3	3708	F3	6513	B2	2797	D2	3544	A2
2112	C4	3116	C2	3709	F4	6514	B2	2798	D3	3560	A2
2115	C1	3117	C4	3710	F3	6515	D1	3100	A3	3561	A3
2123	C4	3118	C2	3712	F4	6516	B1	3104	C4	3562	A3
2129	C2	3122	C2	3714	E4	6517	C2	3105	B4	3701	F2
2131	A1	3123	B2	3715	E3	6531	A2	3106	B4	3702	G2
2141	C2	3124	B3	3716	G2	6532	A1	3107	B4	3703	G2
2143	B2	3125	A3	3717	G4	6540	A2	3109	B4	3704	G2
2144	A4	3126	A3	3718	G4	6562	A3				
2145	C3	3127	B3	3720	E3	6701	G2				
2149	B2	3128	B3	3721	F3	6702	E2				
2153	B3	3132	B1	3722	G3	6703	F3				
2154	A2	3134	A1	3723	G3	6704	G2				
2159	B3	3135	A1	3724	G3	6710	D2				
2162	B3	3137	B2	3725	F3	6711	D3				
2503	B1	3138	C4	3726	G3	7100	A3				
2509	A2	3140	B1	3727	F4	7101	C4				
2513	C1	3141	A2	3729	G3	7105	B4				
2515	B1	3142	C2	3730	E3	7140	A2				
2518	B2	3145	B3	3741	D3	7503	B1				
2523	B2	3146	B3	3743	G3	7505	A2				
2534	A2	3147	B3	3744	E3	7506	B1				
2535	A1	3148	C4	3746	G2	7507	A2				
2536	B2	3149	C4	3748	F4	7508	A1				
2537	A2	3150	C4	3749	E3	7509	A2				
2538	A1	3152	C3	3750	G4	7510	A2				
2539	A2	3153	B1	3751	G3	7511	C1				
2540	A2	3156	A3	3752	D2	7512	B1				
2544	A2	3157	A3	3753	G3	7513	B2				
2702	F4	3158	A2	3754	D2	7514	B2				
2704	F3	3159	B2	3755	D2	7515	D1				
2705	G2	3160	C4	3756	G3	7531	A2				
2706	F3	3161	B1	3757	G4	7532	B1				
2707	F3	3171	B1	3758	D3	7560	A3				
2708	F3	3172	A1	3759	D2	7701	G2				
2709	G3	3175	C2	3760	D3	7703	G2				
2710	F3	3176	A2	3761	F2	7704	E4				
2711	G3	3502	B1	3762	F2	7705	E4				
2712	F4	3503	B1	3763	E2	7706	E4				
2713	G2	3504	B1	3764	F2	7707	E4				
2714	F4	3506	A2	3765	E2	7708	F2				
2715	F4	3507	A2	3766	F2	7709	F2				
2716	F3	3508	A2	3767	E2	7710	F2				
2718	F3	3510	A2	3768	F2	7711	F2				
2719	F4	3511	B1	3790	F4	7712	D2				
2720	F3	3512	B1	3791	F3	7713	D3				
2721	G3	3513	B1	3792	F3	7714	E3				
2722	G3	3514	B2	3793	F4	7715	D2				
2723	E3	3515	C1	3794	E3	9002	F1				
2725	F2	3516	C1	3795	E3	9003	F1				
2726	G3	3517	B1	3796	E3	9008	F1				
2727	G3	3518	B2	3797	E3	9009	F1				
2728	F3	3519	B2	3798	G2	9012	F1				
2741	D3	3520	E1	3999	D2	9013	F1				
2743	E3	3521	B2	5105	C3	9014	F1				
2753	D3	3522	B2	5703	F4	9015	A2				
2754	E2	3523	B2	5705	F2	9019	C1				
2755	E3	3524	B2	6104	C4	9020	B4				
2756	E3	3525	C1	6105	C4	9021	C4				
2759	E3	3526	B1	6106	A3	9023	C4				
2762	E2	3527	E1	6108	B3	9024	A1				
2764	F2	3528	A1	6109	C2	9041	A2				
2766	F2	3529	B2	6110	C2	9042	A2				
2777	F3	3530	A1	6115	C4	9044	A2				
2779	F3	3531	A1	6116	B3	9076	A2				
2780	F4	3532	A2	6117	B4	9080	A1				
2781	F4	3533	B2	6118	C4	9081	A1				
2782	E2	3534	A1	6119	C4	9110	A1				
2784	E3	3535	A1	6120	A2	9111	B3				
2786	F4	3536	A1	6121	B2	9120	A1				
2787	E3	3537	A1	6122	B2	9121	A1				
2789	F3	3538	A2	6130	B1	9717	E4				
2791	F2	3539	A1	6132	B1	9718	E2				
2792	D2	3540	A2	6133	B1	9737	F4				

Layout Standby/Audio Panel (Part 1 Bottom Side)

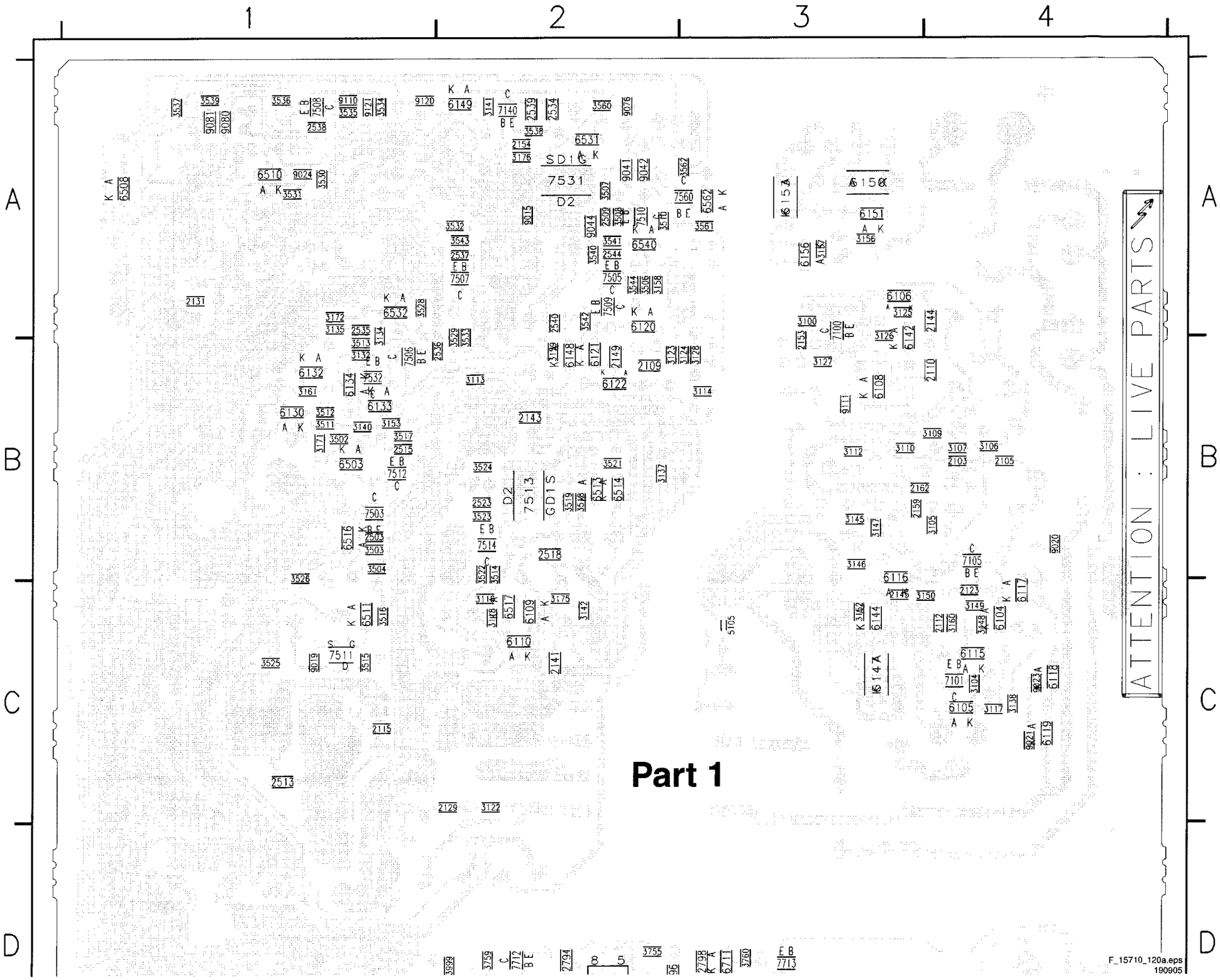

Layout Standby/Audio Panel (Part 2 Bottom Side)

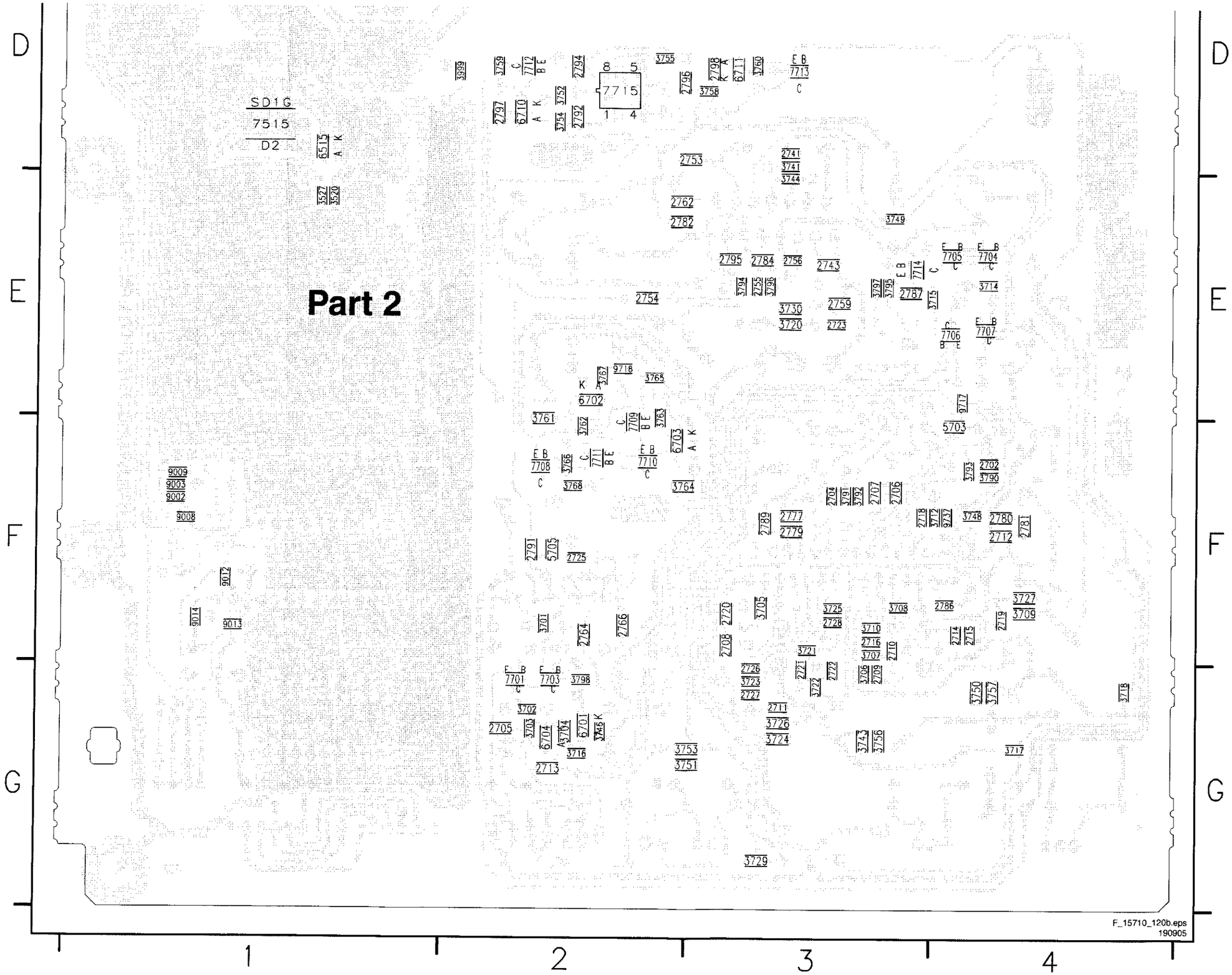

8. Alignments

Index of this chapter:

8.1 General Alignment Conditions
8.2 Hardware Alignments
8.3 Software Alignments
8.4 Option Settings

Note: The Service Default Mode (SDM) and Service Alignment Mode (SAM) are described in chapter 5. Menu navigation is done with the CURSOR UP, DOWN, LEFT or RIGHT keys of the remote control transmitter.

8.1 General Alignment Conditions

8.1.1 Start Conditions

Perform all electrical adjustments under the following conditions:

- Power supply voltage (depends on region):
  - **AP-NTSC:** 120 V_{AC} or 230 V_{AC} / 50 Hz (± 10%).
  - **AP-PAL-multi:** 120 - 230 V_{AC} / 50 Hz (± 10%).
  - **EU:** 230 V_{AC} / 50 Hz (± 10%).
  - **LATAM-NTSC:** 120 - 230 V_{AC} / 50 Hz (± 10%).
  - **US:** 120 V_{AC} / 60 Hz (± 10%).
- Connect the set to the mains via an isolation transformer with low internal resistance.
- Allow the set to warm up for approximately 15 minutes.
- Measure voltages and waveforms in relation to chassis ground (with the exception of the voltages on the primary side of the power supply).
  Caution: never use heatsinks as ground.
- Test probe: Ri > 10 Mohm, Ci < 20 pF.
- Use an isolated trimmer/screwdriver to perform alignments.

8.1.2 Initial Settings

Perform all electrical adjustments with the following initial settings (via the ACTIVE CONTROL button on the RC):

1. To avoid the working of the lightsensor, set ACTIVE CONTROL to OFF.
2. Set SMART PICTURE to NATURAL.
3. Set ACTIVE DISPLAY to OFF

8.1.3 Alignment Sequence

- First, set the correct options:
  - In SAM, select OPTIONS -> OPTION NUMBERS,
  - Fill in the option settings according to the set sticker (see also paragraph "Option Settings"),
  - Select STORE, push CURSOR RIGHT and OK on the remote control, The display will show the message "Store completed".
  - After storing, the set must be restarted!
- Warming up (>10 minutes).
- White-D alignment.

8.2 Hardware Alignments

8.2.1 Backlight Voltage Alignment

Switch the TV "on" and measure (on the LCD Supply panel) the voltage between MP1 and MP2 (ground) as mentioned in the table. Align the mentioned potmeter until the correct voltage is measured.

Table 8-1 Backlight alignment values

Model	MP1 (conn.-pin)	MP2 (conn.-pin)	Voltage (tolerance)	Potmeter
32"	1304-1/2	1309-1/2/3	12V (+/- 0.1V)	3026
37"	1304-3/4	1309-1/2/3	12V (+/- 0.1V)	3026
42"	1304-3/4	1309-1/2/3	11.8V (+/- 0.1V)	3026
	1303-1/2	1320-1/2/3	24.5V (+/- 0.1V)	3U26

Caution: This voltage must be aligned very precisely. When it is too high, it can destroy the inverters, but when it is too low, the backlight will not start up.

8.3 Software Alignments

Put the set in SAM mode (see the "Service Modes, Error Codes and Fault Finding" section). The SAM menu will now appear on the screen. Select ALIGNMENTS and go to one of the sub menus. The alignments are explained below.

Notes:

- All changes must be stored manually.
- If an empty EAROM (permanent memory) is detected, all settings are set to pre-programmed default values.

For the next alignments, supply the following test signals via a video generator to the RF input:

- **EU/AP-PAL** models: a PAL B/G TV-signal with a signal strength of at least 1 mV and a frequency of 475.25 MHz
- **US/AP-NTSC** models: an NTSC M/N TV-signal with a signal strength of at least 1 mV and a frequency of 61.25 MHz (channel 3).
- **LATAM** models: an NTSC M or PAL M TV-signal with a signal strength of at least 1 mV and a frequency of 61.25 MHz (channel 3).

8.3.1 General

IF PLL Offset
Purpose: To minimise crosstalk of video into sound.

Default value: "32".

In case the default value gives problems, use the next method:

1. Set the video generator to a crosshatch test pattern (no sound) and a RF amplitude of 10 mV.
2. Select the channel with the test picture.
3. Listen to the audio on the loudspeakers.
4. Align the value to get minimum noise in the sound.

IF PLL Offset 2nd Tuner
Use the same procedure as described above with the set switched to the DW source.

Tuner AGC
Purpose: To keep the tuner output signal constant as the input signal amplitude varies.

Default value: "40".

In case the default value gives problems, use the next method:
1. Set the video generator to a colour bar test pattern and a RF amplitude of 1 mV.
2. Select the channel with the test picture.
3. Measure the DC voltage on pin 1 of the (main) Tuner.
4. Adjust this voltage via TUNER AGC to just below 3.5 V.

Tuner AGC 2nd Tuner
Use the same procedure as described above with the set switched to the DW source. Measure on pin 1 of the DW Tuner.

8.3.2 White D Alignment

- Set ACTIVE CONTROL to OFF (via RC).
- In the TV -> PICTURE user menu set:
  - DYNAMIC CONTRAST to OFF.
  - COLOUR ENHANCEMENT to OFF.
  - COLOUR to "0".
  - CONTRAST to "100".
  - BRIGHTNESS to "50".
- Go to the SAM and select ALIGNMENTS -> WHITE POINT.

Method 1 (with colour analyser):
- Use a 100% white screen as input signal and set the following values:
  - COLOR TEMPERATURE: "Tint to be aligned".
  - WHITEPOINT RED, GREEN, and BLUE: "127".
  - RED BL OFFSET: "7"
  - GREEN BL OFFSET: "3".
- Measure with a calibrated (phosphor- independent) colour analyser in the centre of the screen. Use a contactless analyser (e.g. Minolta CA-210) for LC displays. Consequently, the measurement needs to be done in a dark environment.
- Adjust, by means of decreasing the value of one or two white points, the correct x,y coordinates (see table "White D alignment values"). Tolerance: dx,dy: ± 0.004.
- Repeat this step for the other Colour Temperatures that need to be aligned.
- When finished press "Store" to store the aligned values to the NVM.

Table 8-2 White D alignment values

Coordinates (temp. in K)	Cool (11000)	Normal (9300)	Warm (D65)
X	0.276	0.285	0.313
Y	0.282	0.293	0.329

Method 2 (without colour analyser):
If you do not have a colour analyser, you can use the default values. This is the next best solution. The default values are average values coming from production (statistics).
1. Select a COLOUR TEMPERATURE (e.g. COOL, NORMAL, or WARM).
2. Set the RED, GREEN and BLUE default values according to the values in the "Tint settings" table.
3. When finished press "Store" to store the aligned values to the NVM.

Table 8-3 Tint settings

Colour Temp.	Display	Cool	Normal	Warm
Cool	32"	104	127	117
	37"	104	126	127
	42"	127	120	122
Normal	32"	115	127	109
	37"	116	127	118
	42"	127	112	105
Warm	32"	127	120	80
	37"	127	118	87
	42"	127	95	68

8.4 Option Settings

8.4.1 Introduction

The microprocessor communicates with a large number of I²C ICs in the set. To ensure good communication and to make digital diagnosis possible, the microprocessor has to know which ICs to address. The presence / absence of these specific ICs (or functions) is made known by the option codes.

Notes:
- After changing the option(s), save them with the STORE command.
- The new option setting is only active after the TV is switched "off" and "on" again with the Mains switch (the EAROM is then read again).

8.4.2 Dealer Options

Table 8-4 Dealer option overview

Menu name	Subjects	Options	Description
Personal Options	Picture Mute	Yes	Picture (blue) mute active in case no picture detected
		No	Noise in case of no picture detected
	Virgin Mode	Yes	TV starts up (once) with language selection menu after mains switch "on" for the first time (virgin mode)
		No	TV does not starts up (once) with language selection menu after mains switch "on" for the first time (virgin mode)
	Auto Store Mode (only for EU and AP-PAL/M sets)	None	Autostore mode disabled (not in installation menu)
		PDC-VPS	Autostore mode via ATS (PDC/VPS) enabled
		TXT page	Autostore mode via ACI enabled
		PDC-VPS-TXT	Autostore mode via ACI or ATS enabled
	TXT Preference (only for EU and AP-PAL sets)	TOP	Preference to TOP Teletext
		FLOF	Preference to FLOF Teletext

8.4.3 Service Options

Select the sub menu's to set the initialisation codes (options) of the set via text menus.

Table 8-5 Service options

Menu-item	Subjects	Options	Description
PIP/DS	Dual Screen	None / 1 tuner / 2 tuners	no DS / DS with one tuner / DS with two tuners
Data	TV Guide US	On / Off	Feature present / not present
Display	Screen	"Value"	Used screen size, type, and resolution (see table "Option code overview" for the values)
	Scanning Backlight	On / Off	Feature present / not present
	Dimming Backlight	On / Off	Feature present / not present
Video Repro	Picture Processing	SPIDER / No SPIDER	Feature present / not present
	Combfilter	None / 2D / 3D	Only selectable with Columbus in set: No/without RAM/with RAM
	Ambient Light	None / Mono / Stereo	Inverter not present / two inverters mono / two inverters stereo
	MOP	On / Off	Feature present / not present (for sets with AmbiLight this is "on")
Source Selection	HDMI 1	None / Audio / No Audio	No HDMI / HDMI with analog audio / HDMI without analog audio
	HDMI 2	None / Audio / No Audio	No HDMI / HDMI with analog audio / HDMI without analog audio
	USB version	None / 1.1 / 2.0 + CR	No USB / USB 1.1 in side I/O panel / USB 2.0 in card reader panel
	IEEE1394	Yes / No	Connector present / not present
	Ethernet	Yes / No	Connector present / not present
	S/PDIF inputs	None / 1 conn. / 2 conn.	None / 1 connector present (in)/ 2 connectors present (in/out)
Audio Repro	Subw. Internal Present	Yes / No	Internal sub woofer present / not present
	Acoustic System (Cabinet design, used for setting dynamic audio parameters).	None	
		Entry ME5 5W	
		Entry ME5 15W	
		(Soft) Wrap	
		Top	xxPF9830
		Entry+	
		Others	
Miscellaneous	Alternative Tuner	Philips / Alps	Tuner brand
	Tuner Type	TD1336S	Tuner type
Opt. no.	Group 1		xxxxx xxxxx xxxxx xxxxx (see set sticker)
	Group 2		xxxxx xxxxx xxxxx xxxxx (see set sticker)

8.4.4 Opt. No. (Option numbers)

Select this sub menu to set all options at once (expressed in two long strings of numbers).
An option number (or "option byte") represents a number of different options. When you change these numbers directly, you can set all options very quickly. All options are controlled via eight option numbers.
When the EAROM is replaced, all options will require resetting. To be certain that the factory settings are reproduced exactly, you must set both option number lines. You can find the correct option numbers on a sticker inside the TV set.

Example: The options sticker gives the following option numbers:
- 01617 00004 02137 20544
- 01030 00000 00551 00000

The first line (group 1) indicates hardware options 1 to 4, the second line (group 2) indicates software options 5 to 8.
Every 5-digit number represents 16 bits (so the maximum value will be 65536 if all options are set).
When all the correct options are set, the sum of the decimal values of each Option Byte (OB) will give the option number.
See next table for the option overview.

Table 8-6 Option code overview

Byte	Bit (dec. value)	Subject	Options	Settings (in decimal values)	Remarks
1	0 (1)	Video Repro	Picture Processing	0= No SPIDER, 1= SPIDER	SPIDER availability, influences, digital options.
	1 (2)				
	2 (4)				
	3 (8)		Comb Filter	0= None, 8= 2D Comb (Columbus without DRAM), 16= 3D Comb (Columbus with DRAM)	
	4 (16)				
	5 (32)		Ambient Light	0= None, 32=Ambi-light Stereo, 64= Ambi-light Mono	
	6 (64)				
	7 (128)				
	8 (256)		Dual Screen	0= None, 256= One Tuner DS, 512= Two Tuner DS	
	9 (512)				
	10 (1024)		MOP	0= Off, 1024= On	Matrix Output Processor (or EBILD)
	11 (2048)		JOP	0= Off, 2048= On	Jaguar Output Processor (or EBILD) Reserved for future use
	12 (4096)		POD	0= Off, 4096= On	
	13 (8192)		n.a.		
	14 (16384)		n.a.		
	15 (32768)		n.a.		
2	0 (1)	Sound Repro	Cabinet type (Acoustic System	0= None, 1= Entry_ ME5_5W, 2= Entry_ME5_15W, 3= (Soft)Wrap, 4= Top, 5= Entry+, 15= Others	Cabinet design, used for setting dynamic audio parameters.
	1 (2)				
	2 (4)				
	3 (8)				
	4 (16)		Aux Headphone Sound	0= Off, 16= On	Dual AC3 sound in Aux available.
	5 (32)		n.a.		
	6 (64)		n.a.		
	7 (128)		n.a.		
	8 (256)		n.a.		
	9 (512)		Sub woofer Internal	0= Not Present, 512= Present	
	10 (1024)		Centre Mode Support	0= Not Supported, 1024= Supported	
	11 (2048)		n.a.		
	12 (4096)		n.a.		
	13 (8192)		n.a.		
	14 (16384)		n.a.		
	15 (32768)		n.a.		
3	0 (1)	Source Select	HDMI1	0= None, 1= With analog audio, 2= Without analog audio	
	1 (2)				
	2 (4)		HDMI2	0= None, 4= With analog audio, 8= Without analog audio	
	3 (8)				
	4 (16)		n.a.		
	5 (32)		USB Version	0= None, 32= USB 1.1, 64= USB 2.0 + Card reader	USB support.
	6 (64)				
	7 (128)		IEEE1394	0= Not Present, 128= Present	
	8 (256)		Ethernet	0= LAN not present, 256= LAN present	
	9 (512)		n.a.		
	10 (1024)		S/PDIF Inputs	0= None, 1024= 1 Connector, 2048= 2 Connectors	
	11 (2048)				
	12 (4096)		LCOS I/O	0= Not Present, 4096= Present	
	13 (8192)		n.a.		
	14 (16384)		n.a.		
	15 (32768)		n.a.		
4	0 (1)	Region	Region	0= EU, 1= AP-P, 2= AP-N, 3= US, 4= Latam	
	1 (2)				
	2 (4)				
	3 (8)	Interconnect	China IF	0= Off, 8= On	
	4 (16)		Alternative Tuner	0= Philips, 16= Alps	Tuner make.
	5 (32)		Tuner Type	0= TD1336s (B-Chassis US), 32= TD1331(J-Chassis US), 64= UV1318 (Analogue EU), 96= TD1316 (Hybrid EU)	Tuner type (B-chassis US is e.g "BP2.3U").
	6 (64)				
	7 (128)	Source Select	n.a.		
	8 (256)		AV1	0= CVBS/RGB, 256= CVBS/YC/LR, 512= CVBS/YC/YPbPr/HV/LR	Input type.
	9 (512)				
	10 (1024)		AV2	0= CVBS/YC/RGB/P50, 1024= CVBS/YC/LR	Input type.
	11 (2048)				
	12 (4096)		AV3	0= Not Available, 4096= CVBS, 8192= YPbPr	Input type.
	13 (8192)				
	14 (16384)		AV4	0= Not Available, 16384= YPbPr	Input type.
	15 (32768)				

Byte	Bit (dec. value)	Subject	Options	Settings (in decimal values)	Remarks
5	0 (1)	Display	Screen	See table "Display option code overview" in chapter 5 "Service Modes, ...". Example: 028 (6912)= 37-inch LCD Sharp full HD (used in 37PF9830/10)	Screen size, type, and resolution.
	1 (2)				
	2 (4)				
	3 (8)				
	4 (16)				
	5 (32)				
	6 (64)				
	7 (128)				
	8 (256)		n.a.		
	9 (512)		n.a.		
	10 (1024)		Dimming Backlight	0= Off, 1024= On	
	11 (2048)		Scanning Backlight	0= Off, 2048= On	
	12 (4096)		n.a.		
	13 (8192)		n.a.		
	14 (16384)		n.a.		
	15 (32768)		n.a.		
6	0 (1)	Miscellaneous	Monitor	0= Off, 2= On	Reserved for future use
	1 (2)		n.a.		
	2 (4)		Stand Alone	0= Off, 4= On	Reserved for future use
	3 (8)		n.a.		
	4 (16)		n.a.		
	5 (32)		n.a.		
	6 (64)		Proximity Sensor	0= Off, 64= On	
	7 (128)		n.a.		
	8 (256)		Touch Pad	0= Off, 256= On	Reserved for future use
	9 (512)		n.a.		
	10 (1024)		n.a.		
	11 (2048)		n.a.		
	12 (4096)		n.a.		
	13 (8192)		n.a.		
	14 (16384)		n.a.		
	15 (32768)		n.a.		
7	0 (1)	Personal	Self Learning TV	0= Off, 1= On	
	1 (2)		Auto Store Mode	0= None, 2= PDC/VPS, 4= TXT Page, 6= PDC/VPS/TXT Page	Fixed to: "None" in the AP-N and US versions.
	2 (4)				
	3 (8)		2CS Korea	0= Off, 8= On, 16= Auto	
	4 (16)				
	5 (32)		Picture Mute	0= Off, 32= On	
	6 (64)		n.a.		
	7 (128)		Virgin Mode	0= Off, 128= On	
	8 (256)		Hotel Mode	0= Off, 256= On	
	9 (512)		Content Browser	0= Not Present, 512= Present	
	10 (1024)		Connected Planet	0= Off, 1024= Full Connected Planet + logo support	
	11 (2048)				
	12 (4096)		n.a.		
	13 (8192)		EPG	0= None, 8192= TXT Guide only, 16384= NextView 2C3, 24576 = NexTView 2	
	14 (16384)				
	15 (32768)		TV Guide USA (Gemstar)	0= Off, 32768= On	
8	0 (1)	n.a.	n.a.		
	1 (2)	n.a.	n.a.		
	2 (4)	n.a.	n.a.		
	3 (8)	n.a.	n.a.		
	4 (16)	n.a.	n.a.		
	5 (32)	n.a.	n.a.		
	6 (64)	n.a.	n.a.		
	7 (128)	n.a.	n.a.		
	8 (256)	n.a.	n.a.		
	9 (512)	n.a.	n.a.		
	10 (1024)	n.a.	n.a.		
	11 (2048)	n.a.	n.a.		
	12 (4096)	n.a.	n.a.		
	13 (8192)	n.a.	n.a.		
	14 (16384)	n.a.	n.a.		
	15 (32768)	n.a.	n.a.		

9. Circuit Descriptions, Abbreviation List, and IC Data Sheets

Index of this chapter:

9.1 Introduction
9.2 LCD Power Supply
9.3 DC/DC Converters (on SSB)
9.4 Inputs
9.5 MPIF (PNX 3000)
9.6 PNX2015
9.7 PNX2015: AVIP
9.8 PNX2015: Columbus (Comb Filter)
9.9 PNX2015: HD Subsystem
9.10 PNX2015: LVDS Transmitter (if used)
9.11 PNX2015: Stand-by Processor
9.13 VIPER 2 (PNX 8550)
9.14 MOP
9.15 Ambient Light (if present)
9.16 Abbreviation List
9.17 IC Data Sheets

Notes:

- Only **new** circuits (circuits that are not published recently) are described.
- Figures can deviate slightly from the actual situation, due to different set executions.
- For a good understanding of the following circuit descriptions, please use the wiring, block (chapter 6) and circuit diagrams (chapter 7). Where necessary, you will find a separate drawing for clarification.

9.1 Introduction

This chassis (development name "Jaguar ") is: The move from the analog world to the digital world. W.o.w. from signal processing via "hardware circuits" to signal processing via "software algorithms". This means: no software = no picture and sound!

Some key components are:

- MPIF (PNX3000).
- AVIP/COLUMBUS (PNX2015).
- SPIDER.
- VIPER 2 (PNX8550).
- MOP (EPLD).

9.1.1 Chassis Block Diagram

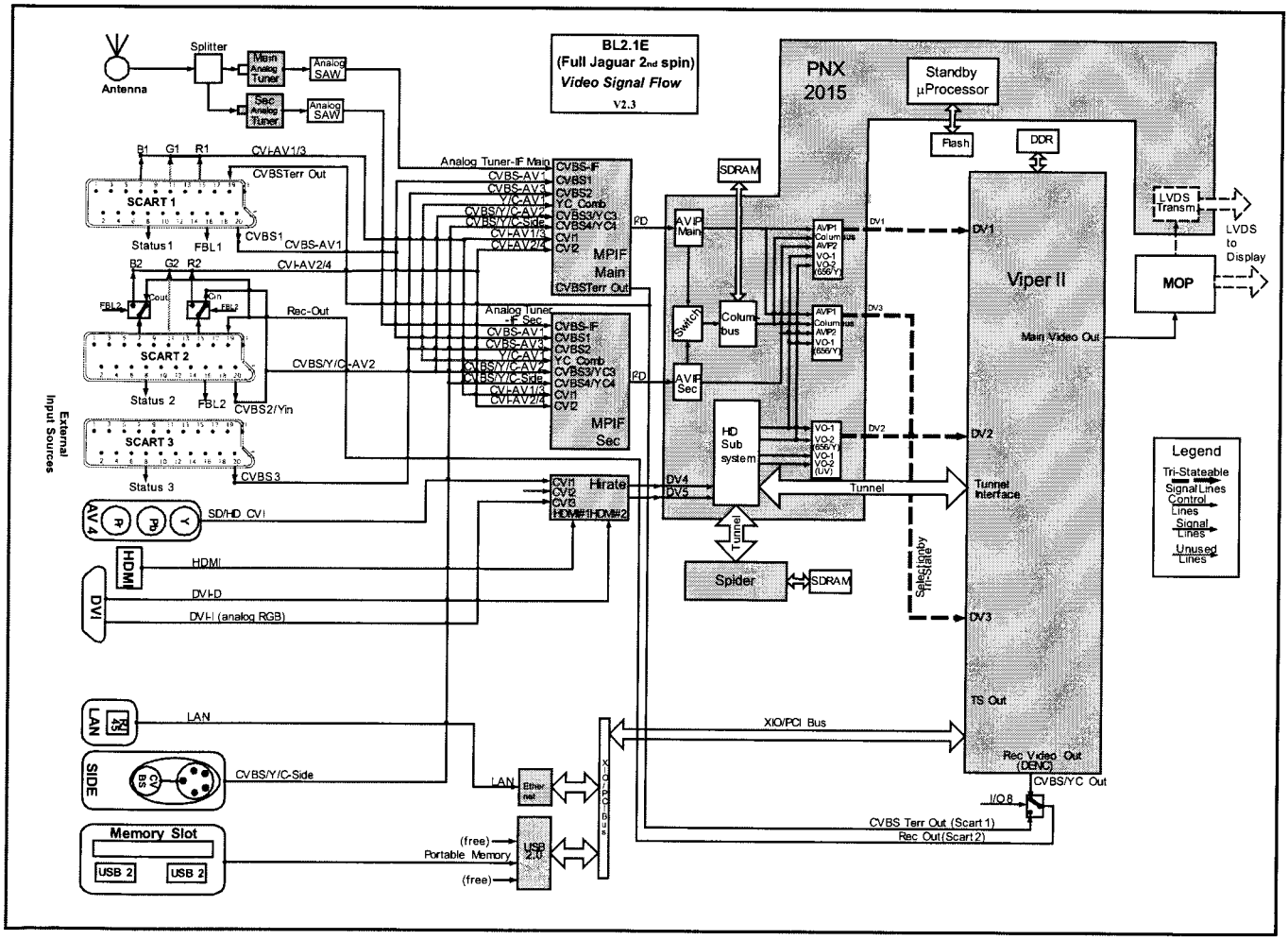

F_15710_177.eps
260905

Figure 9-1 Video Block Diagram

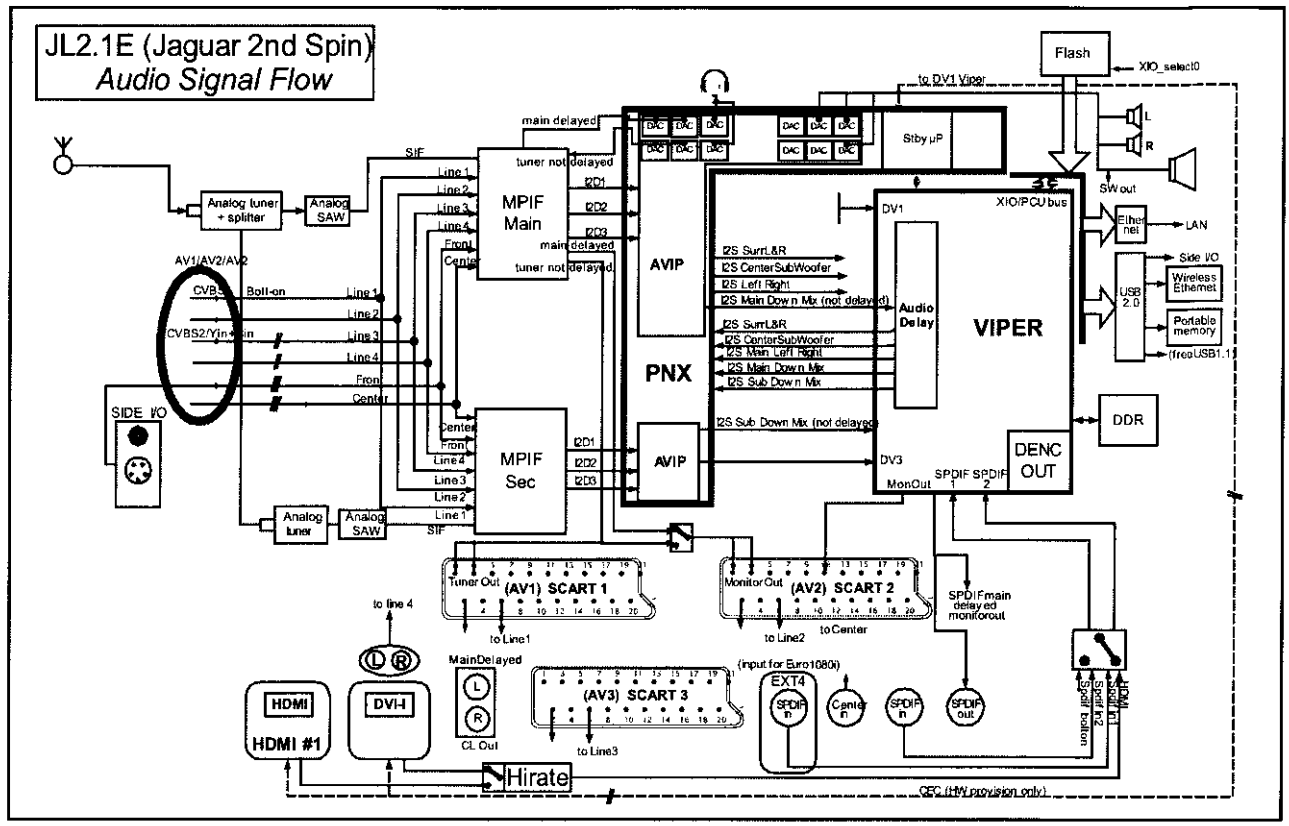

F_15710_178.eps
260905

Figure 9-2 Audio Block Diagram

The AVIP together with the MPIF device is used to perform the input decoding of a single stream of analog audio and video broadcast signals. In addition, the AVIP is used for decoding and presentation of audio output streams. The main data connection between MPIF and AVIP is done via an I²D bus. The AVIP converts the incoming video data to ITU-656 format for communication to the VIPER IC.

The audio data is transferred between the AVIP and VIPER using I²S.

The AVIP IC is controlled by the VIPER via the I²C bus.

The key component in the system, the VIPER, performs almost all key features, like video quality enhancement, motion compensation, picture-in-picture processing, and others. It is a completely digital IC with a TriMedia DSP (Digital Signal Processor) core and a MIPS microcontroller core. The DSP and some additional cores are used to do the video feature processing and some auxiliary sound feature processing. The MIPS microcontroller core is used for all internal and external controlling tasks including a system wide I²C bus.

Connected to the VIPER (via the tunnel bus of the PNX2015) is the SPIDER IC. This video co-processor is responsible for extra picture processing like temporal noise reduction, de-interlacing for HD signals, scaling, and PixelPlus 2 processing. The VIPER provides a primary digital (YUV or RGB) output to the LVDS transmitter. For models with the AmbiLight feature, an EPLD is connected between VIPER output and LVDS Transmitter input. This EPLD (or MOP) is used for the AmbiLight processing and some picture enhancements.

9.1.2 Features

Table 9-1 Main chassis features

Feature	32"	37"	42"
AmbiLight	Stereo	Stereo	Stereo
Display	1366x768	1920x1080	1920x1080
USB	2 x USB2.0	2 x USB2.0	2 x USB2.0
Clear LCD	Yes	No	No
Ethernet	No	No	Yes
Card reader	Yes	Yes	Yes
MPEG playback	No	No	Yes
SPIDER	Yes	Yes	Yes
MOP (EPLD)	Yes	Yes	Yes
PixelPlus	2 HD	2 HD	2 HD

The main features for this chassis are (see also table):

- Fit for both analog and digital signal processing, this by converting analog signals into digital transport streams and allowing seamless zapping between all possible signal sources. This makes the chassis applicable for e.g. receiving ATSC in an integrated product form.
- AmbiLight: To be able to control lamps at the rear of the TV with respect to the measured ambient light level from the light sensor or the picture content, a control output from AutoTV has been foreseen.
- The internal digital processing allows new "Multi-Media" applications such as Content Browser, Memory Card Slot, Local Area Network support and all kinds of streaming applications.
- The chassis can be upgraded in the future with internal functionality such as Personal Video Recording, DVD/RW, MPEG playback.

9.1.3 SSB Cell Layout

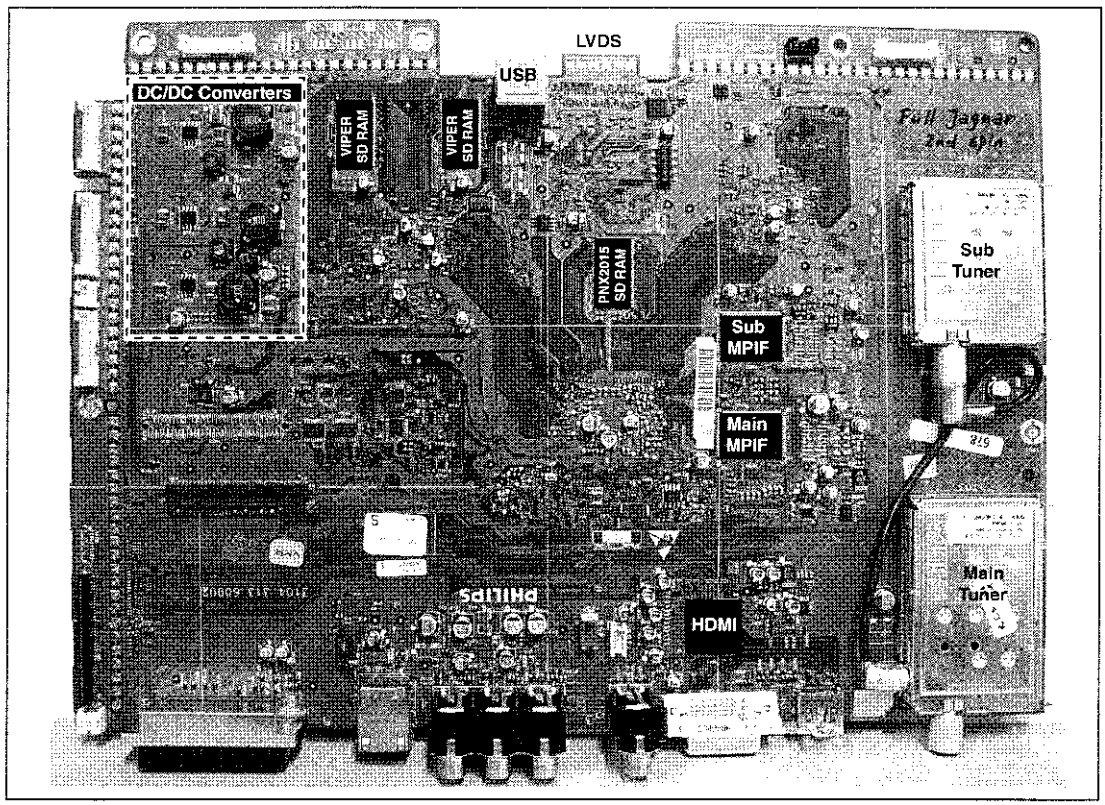

Figure 9-3 SSB top view

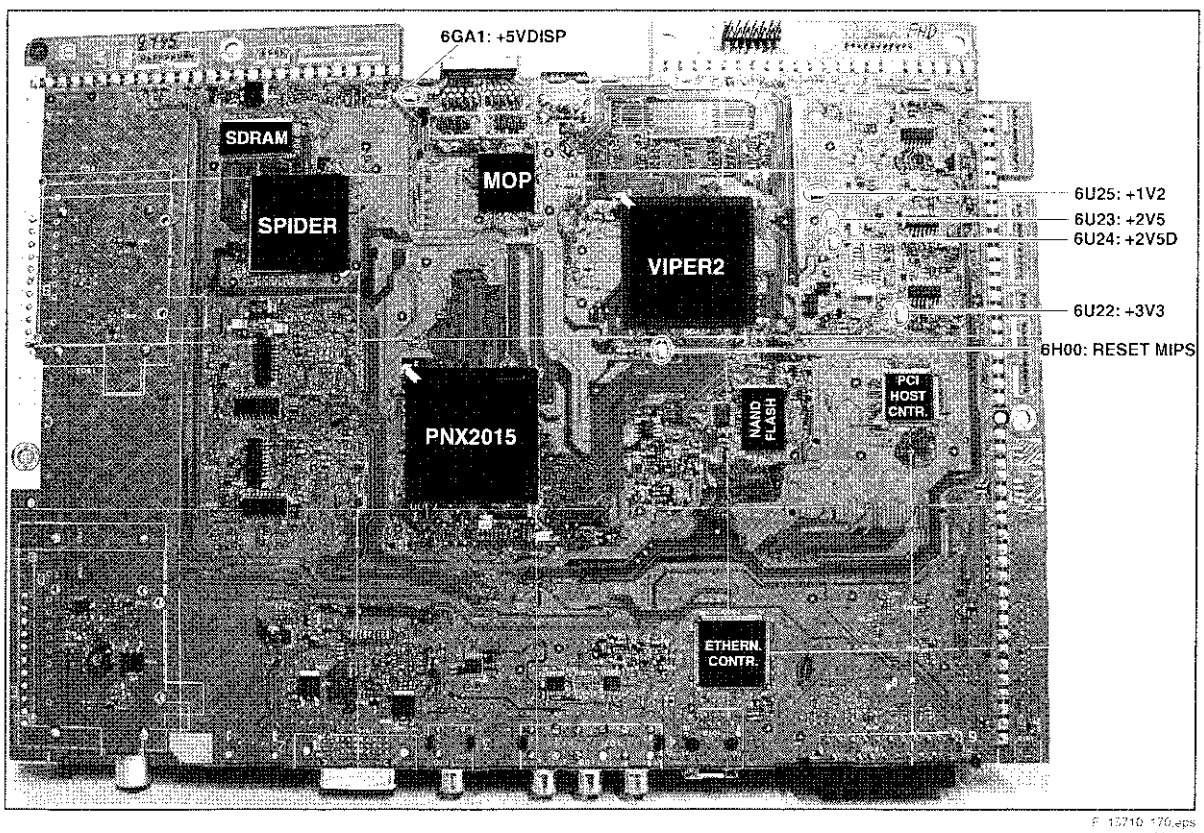

Figure 9-4 SSB bottom view

9.2 LCD Power Supply

9.2.1 General

- All displays:
  - The sound supplies are +/- 18V.
  - A loudspeaker DC protection is added (via TS7030 on the Main Supply).
  - A POK (Power OK) is generated when the 12V from the Aux supply is stabilised.
  - The STANDBY supply is integrated on the Audio Amplifier panel.

9.2.2 Block Diagram

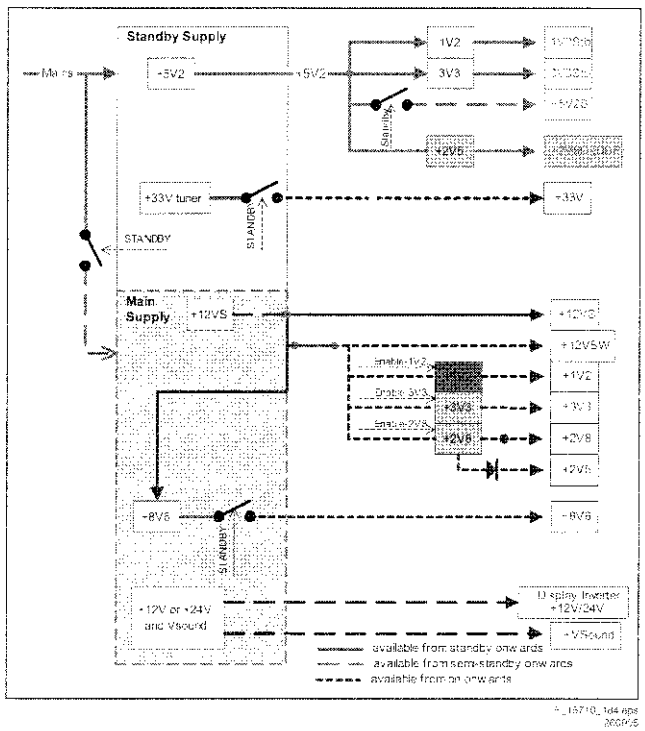

Figure 9-5 Block diagram power supply

Main Supply

Diversity

- Mains input voltage:
  - 240 V_{AC}.
- Mains filter diversity:
  - 2 x mains filter + inrush current resistor.
- Screen size diversity:
  - One module for 32" and 37" sets.
  - Two (almost identical) modules on one PWB for 42" sets.

Specifications

- 12 V / 3 A on connector 1304 (for AmbiLight and to generate +8V6).
- 24 V / 5 A for LCD backlight on connector 1304.
- +18V, -18V sound on connector 1M02.
- +8V6 (derived from +12V from the Main Supply, switched "off" in stand-by).
- Output voltage: over-voltage protection of resonant supply.
- Output current protection of resonant supply.
- Current protection at some safety fault conditions.

Stand-by Mode

- The resonant supply is switched "off" via a relay (1350 or 1450) that is driven by the Stand-by Supply (via connector 1305).

Outputs

- 130-400 V_{DC} (full range) to Stand-by Supply (connector 1306).
- Mains over-voltage and safety protection for Stand-by Supply (connector 1307).

Inputs

- Relay drive voltage (for STANDBY/ON mode) on connector 1305.
- DC_PROT signal to protect loudspeakers when there is a DC voltage across the loudspeakers (1M02).

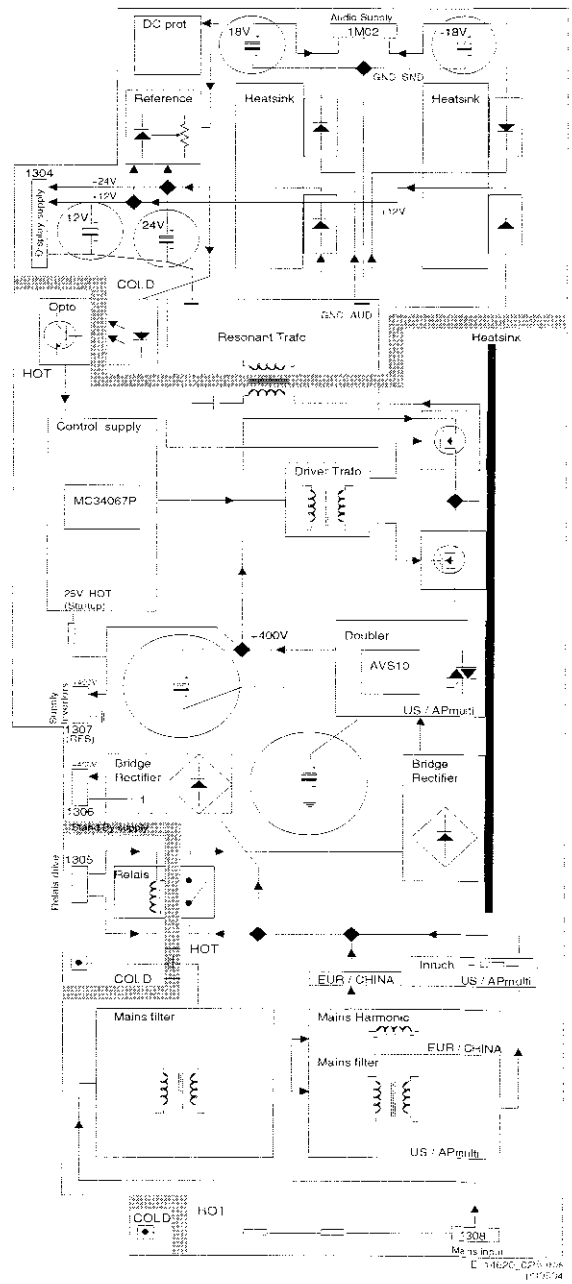

Figure 9-6 Functional diagram Main Supply (one module)

Stand-by Supply

The Stand-by Supply is based upon the "Fly Back Converter" principle. A description of this principle can be found in the FM2x Service Manuals.

Specifications

- Class D audio amplifier on same panel.
- Low profile.
- Full range (90 - 270 V_{AC}) and for all screen sizes (however NOT exchangeable due to component diversity).

Outputs

- +5V2.
- +5V_SW (switched "off" in stand-by).
- V_TUN (Tuner voltage, switched "off" in stand-by).

Inputs

- 130-400 V_{DC} from the Mains Filter panel (1306).
- STANDBY_INFO from SSB (1M03).
- Over-voltage / safety protection from the Main Supply (1307 -> 6150/51/53 -> 7150 -> 7505/09 -> 7560).
  - Protection against over-voltage of the mains.
  - Protection against short-circuit of mains elco's with doubler.

Interfacing between SSB and Main Supply

- +24V (or +12V) from MF supply (1304) to Display (backlight) (1312, 1313, or 1314, 1315 or 1316, 1317).
- +12V from MF supply (1304) to SSB (1M46) and Ambient Light circuit (1M10).

9.2.3 Start-up Sequence

Connect the Mains Voltage

1. A voltage of 130-400 V_{DC} (depends on region) will be available at the Stand-by Supply panel.
2. The +5V2 becomes available for the SSB.

Close the Functional Switch

1. +5V2_RELAY_IO will be present (= supply for relay and uP). A POR is generated.
2. If STANDBY bit is "low", the +5V_SW will be present for the SSB.
3. The relay is closed.
4. The Main Supply will start up.
5. The +24V (+12V for Sharp displays) and the Audio Supply becomes available.
6. +12V ready from MF panel -> +8V6 on Stand-by Supply panel is ready to SSB

9.2.4 Power States

There are four different power states.

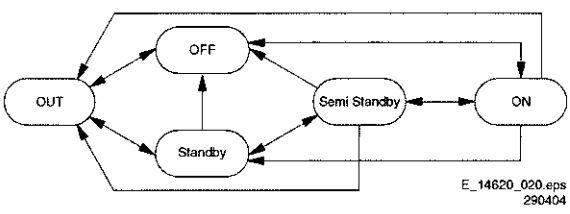

Figure 9-7 Power state diagram

- **OUT:** The set is OUT when the mains cord is disconnected. When the mains cord is connected, the set goes to OFF or to STANDBY state, depending on the last status in the NVM. From all states, the set can be set to the OUT state by disconnecting the mains cord or by a mains interruption.
- **OFF:** In the OFF state, the OTC is powered but is in low power STANDBY state. No LEDs are "on", RC6 is ignored, no EPG or P50 is possible, Proximity is set to "off", time extraction is not started (if it was done before this state, the clock stays running). This state can only be changed by the tact switch; the set goes via SEMI-STANDBY to ON. From all states, we can go to the OFF state by the tact switch.
- **STANDBY:** The set is in STANDBY if the STANDBY bit is set. This state can change with the RC6 "on" command, for EPG loading, P50 recording, for time extraction, or for ambient light. The next state is SEMI-STANDBY and to ON if the STANDBY bit is not set.
- **SEMI-STANDBY:** State between STANDBY or OFF and ON state. All supply voltages are present, but the screen is blanked.
- **ON:** set is ON.

Notes:

- In SEMI-STANDBY coming from STANDBY, the blue LED is "on",
- In SEMI-STANDBY coming from ON, the red LED is "on".

9.2.5 POR Detection

Since the ON/OFF switch is always closed (not present any more), there is no POR by starting up. The POR line is connected to +5V2 and is always "high". Only when the mains cord is reconnected, the Stand-by supply starts up, and the POR line follows the start up of the 5V2

9.3 DC/DC Converters (on SSB)

9.3.1 Introduction

The LCD Supply and Stand-by Supply are the main power supplies for this chassis. They deliver the following supply voltages to the SSB (connector 1M46):

- +12VS.
- +8V6.
- +5V2.
- +5V.
- +VTUN.

As the VIPER and many other ICs on the SSB require low supply voltages at high current (up to 3 A for the main voltages), on board DC/DC converters are implemented. The circuit on the SSP provides the 3.3 V, 2.5 V, and 1.2 V. A DC/DC converter has the following advantages:

- The DC/DC converter is directly on the SSB near the circuits that needs to be powered.
- Some circuits on the SSB need high current by low voltage, so there is no risk to have power dips or voltage loss in connections between the PSU and the SSB panel.

9.3.2 Block Diagram

See also diagram B1.

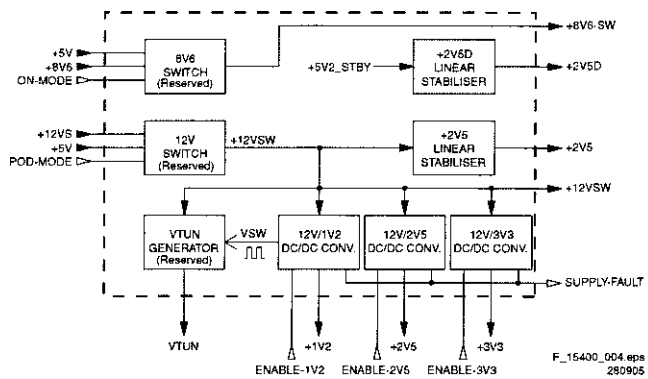

Figure 9-8 DC/DC converter block diagram

9.3.3 Start-up Sequence

1. If the input voltage of the DC/DC converters is around 12 V (measured on the decoupling capacitors 2U17/2U25/ 2U45) and the ENABLE signals are "low" (active), then the output voltages should have their normal values.
2. First, the Stand-by Processor activates the +1V2 supply (via ENABLE-1V2).
3. Then, after this voltage becomes present and is detected OK (about 100 ms), the other two voltages (+2V5 and +3V3) will be activated (via ENABLE-3V3).
4. The current consumption of controller IC 7U00 is around 20 mA (that means around 200 mV drop voltage across resistor 3U22).

9.3.4 1.2V, 2.5V, and 3.3V DC/DC Converters

Introduction

The circuits use a so-called "synchronous buck converter".
Some characteristics:

- Switching frequency: approx. 250 kHz.
- Efficiency: approx. 90%.
- Built-in output over-voltage and over-current protections
- Soft start.
- Software controlled "on/off" (via ENABLE line).

Block Diagram

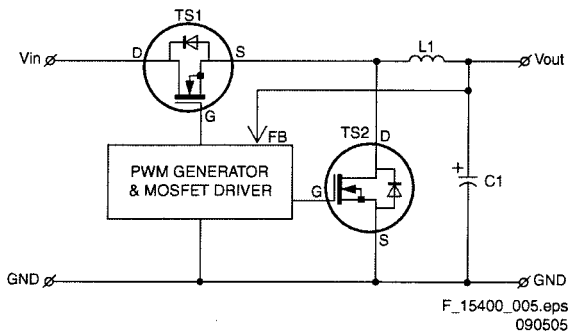

Figure 9-9 Block diagram synchronous buck converter.

The advantage of a "synchronous buck converter" over a "classical buck converter" is its better efficiency (about 90%). The difference between the two is that in a synchronous buck converter the "low -side" diode is replaced by a MOSFET TS2. This, because the voltage drop across a MOSFET is smaller than the forward voltage drop of a diode.
This second MOSFET TS2 conducts current during the "off" times of the first MOSFET TS1. The upper MOSFET TS1 conducts, to transfer energy from the input to the inductor L_1 and load R_L, while the lower MOSFET TS2 conducts to circulate the inductor current (free wheel). The synchronous PWM control block regulates the output voltage by modulating the conduction intervals of the upper and lower MOSFETs.

12 V to 1.2 V DC/DC converter (7U06)

This circuit is activated when the ENABLE-1V2 signal is "low". The network 3U26+2U91+3UA7 delays the switch "off" of the converter in case of a power drop on +5V2.
The controller IC contains the error amplifier, a reference voltage of 0.9 V 2% (pin 1), an oscillator (250 kHz, set by resistor 3U31), driver stages for the output MOS-FETs 7U03-1 and 7U03-2 (pins 11: HGATE and 14: LGATE), and a window comparator for the output voltage (it has as output PGOOD pin, connected to SUPPLY-FAULT signal).
The output voltage is set by resistors 3U04, 3U28, and 3U30 and filtered by 2U39 and 5U06 for medium frequency (switching frequency) and 2U59, 5U09, 5U12, 5U13, and 5U14 for high frequency (tenths of MHz).
A boost voltage (peaks of 22 V) is provided by components 2U28 and 6U03 to pin 12 for properly driving the transistor 7U03-1.
The output voltage is ramped-up in about 5 ms (set by value of capacitor 2U19).
Additional AC-feedback for stability of converter (components 2U43, 2U54, 2U57,3U39 and 3U42).
The switching speed of 7U03-A is reduced for noise reason by means of components 2U86, 3U49, and 3U96.
The output over-voltage protection (crowbar action) and over-current protection (6...8A) is set by resistor 3U14.

12 V to 2.5 V DC/DC converter (7U05)

Is almost similar to the 12 V to 1.2 V DC/DC converter, but is providing two output voltages: +2V5 and +2V5D (separated by Schottky diodes).
It is started after the 12 V to 1.2 V DC/DC converter, by making the ENABLE-2V5 line "low".

12 V to 3.3V DC/DC converter (7U04)

Is similar to the 12 V to 1.2 V DC/DC converter, but is providing 3.3 V and is started together with the 12 V to 2.5 V DC/DC converter by making its enable signal ENABLE-3V3 "low".

Service Tips

- When a power MOS-FET is found defective, replace the other power MOS-FET and fuse 1U01 as well.
- For a normal operation of the converter, it is important to check the switching frequency, the value of the boost voltage, and the amplitude of the gate voltage of transistor 7U04 (it should be close to the boost voltage).

9.3.5 +2V5D Linear Stabiliser (7U19)

- Provides the +2V5D voltage for the DDR memory chips of the VIPER, and is derived from the +5V2-STBY voltage coming from the Main Power Supply.
- The output current is limited to a few tenths of mA.
- Output over-voltage protection is done by zener diode 6U17.

9.3.6 Internal Protection (7U20)

- This circuit around 7U20 provides a SUPPLY-FAULT signal (active "low"), when the output voltage of any DC/DC converter is out of its limits (± 10% of the normal value). In such cases, the Stand-by Processor will immediately stop the supplies by sending a "high" control signal towards the external and internal supplies: ENABLE-xVx, ON-MODE, and STAND-BY.
  Note: The SUPPLY-FAULT control signal is "low" when any DC/DC converter is disabled by its control signal (ENABLE-xVx) and +12VSW is present, therefore it is ignored during start-up!
- The internal protection works also together with the over-voltage detection transistors 7U08-2, 7U09-2, 7U10-2, and the PGOOD pin of the controller ICs (7U04, 7U05, and 7U06).

9.3.7 +12V Under-voltage Detection (7UB1)

This circuit around 7UB1 detects when the incoming +12V drops below 9 V and then switches "off" the 2.5 V and 3.3V DC/DC converters. In this way, the power "off" sequence of the VIPER (+3V3, +2V5, and +2V5D must drop before the +1V2 drops) is guaranteed.

9.3.8 Indicator LEDs (6U22, 6U23, 6U24)

They provide a visual indication on the availability of the +1V2, +2V5, and +3V3 voltages.

9.3.9 Useful Data

See table below for the voltage specifications:

Voltage Name	Value [V]	Tolerance [%]
+5V2	5.2	5
+5V	5.1	5
+8V6	8.6	5
+12VS	12	5
+VTUN	33	5
+1V2	1.26	3
+2V5	2.6	4
+2V5D	2.6 (2.5) *	4 (5) *
+3V3	3.3	5
+5V2S	5.1	5
*) ON mode (STAND-BY mode)		

In the next figures an overview is given of the power distribution in the different power states: STANDBY, SEMI-STANDBY, and ON-mode.

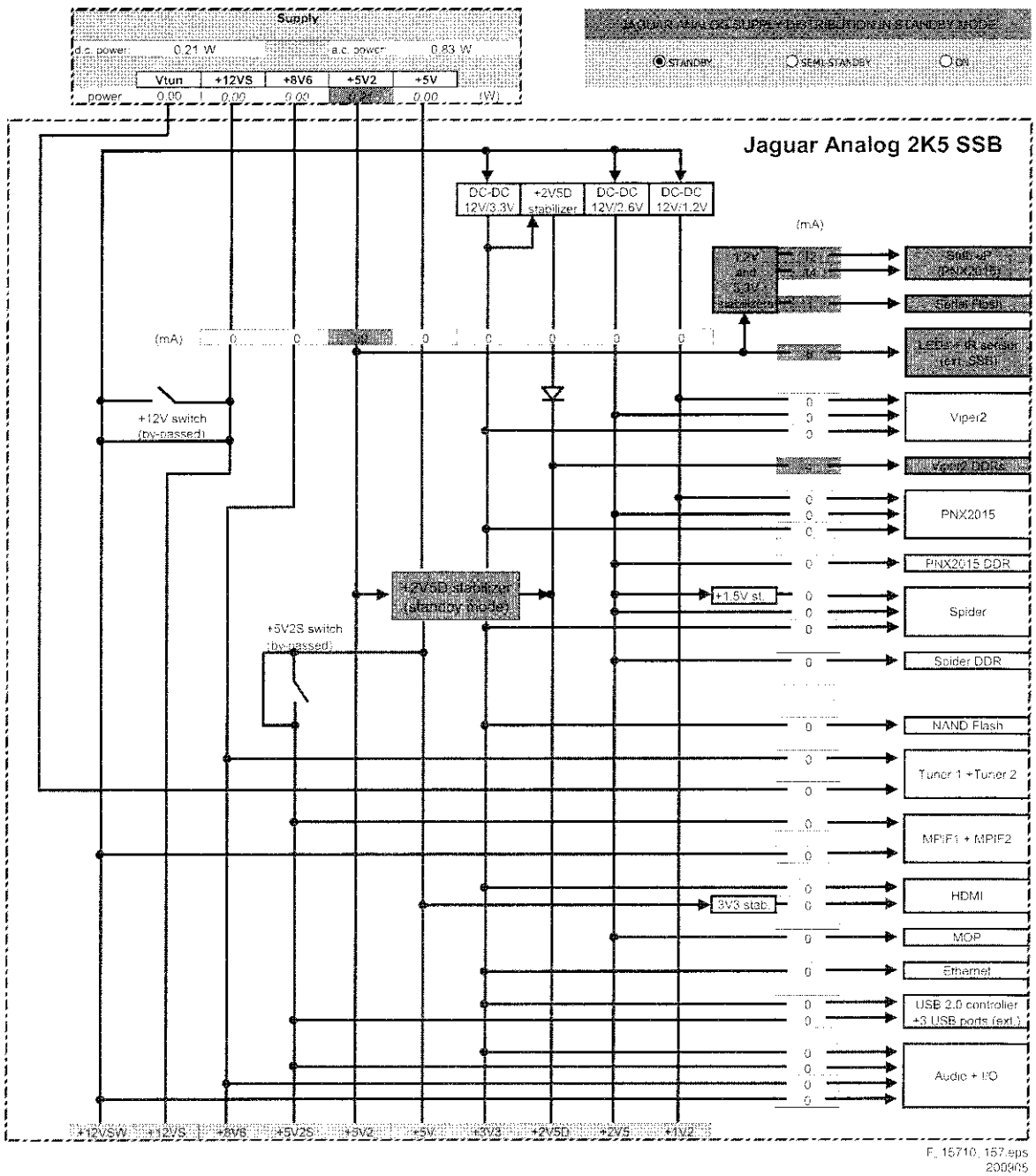

Figure 9-10 Supply distribution: STANDBY Mode (mentioned values are indicative)

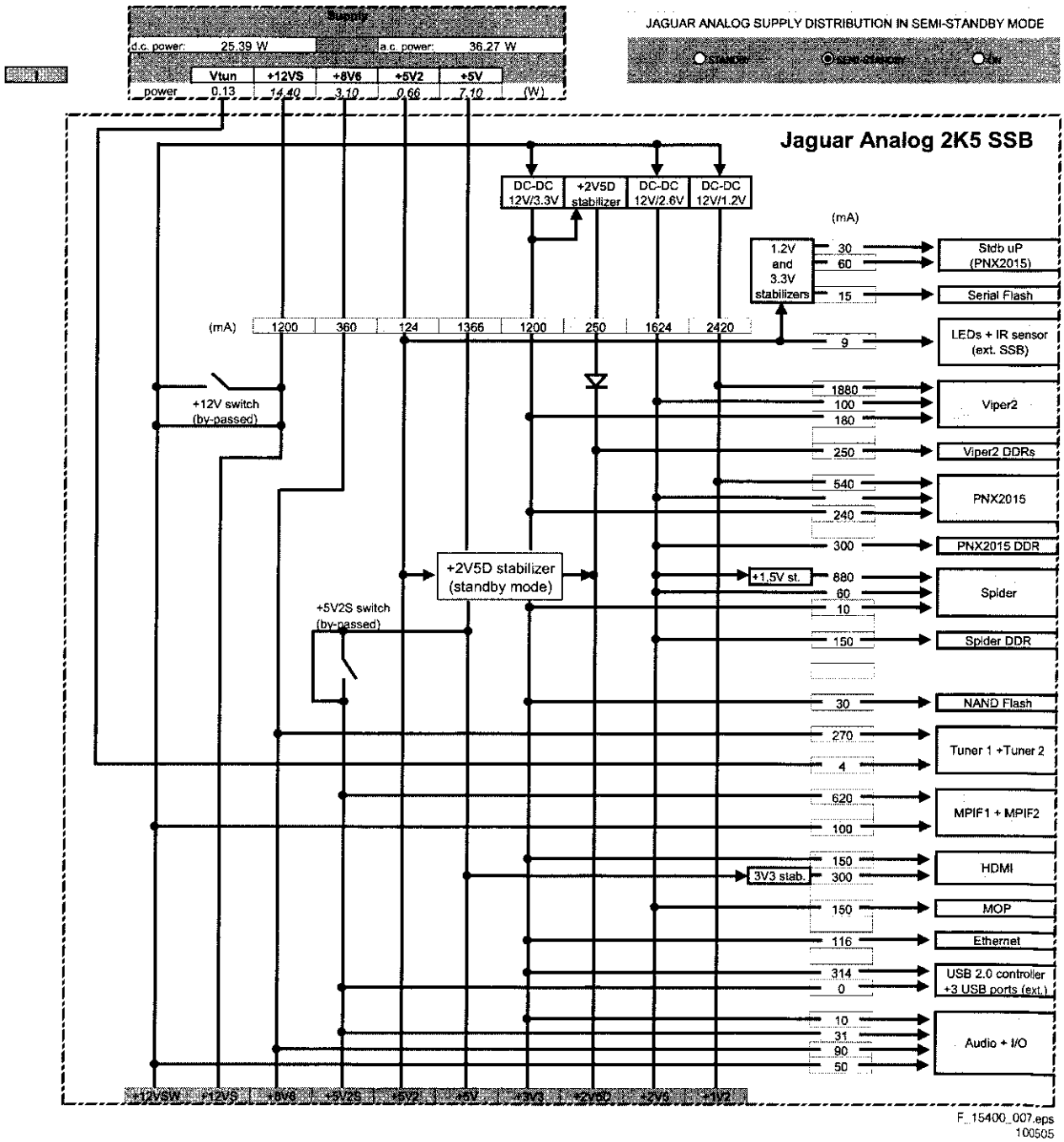

Figure 9-11 Supply distribution: SEMI STDBY Mode (mentioned values are indicative)

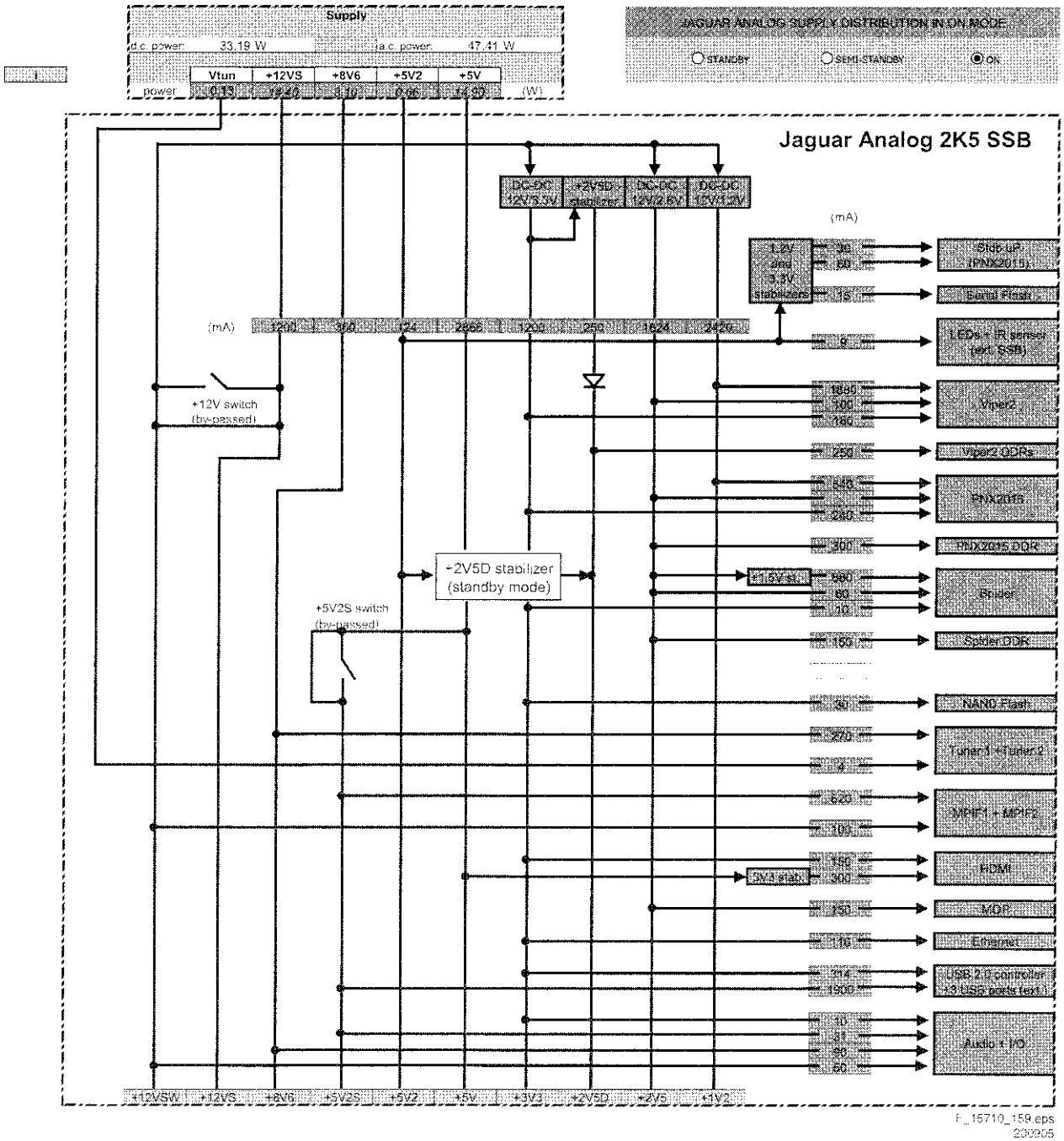

Figure 9-12 Supply distribution: ON Mode (mentioned values are indicative)

9.4 Inputs

9.4.1 USB

This chassis features USB2.0. It is hosted by a separate IC (7N00, diagram B13A) which communicates with the VIPER via a PCI bus.
Each USB port has four lines:
1. 5V (red).
2. D- (white).
3. D+ (green).
4. GND (black).

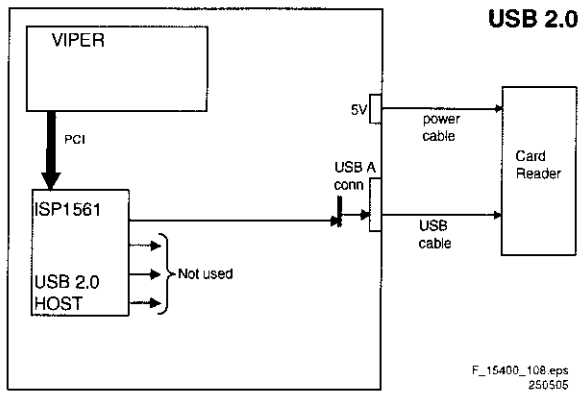

Figure 9-13 USB configuration

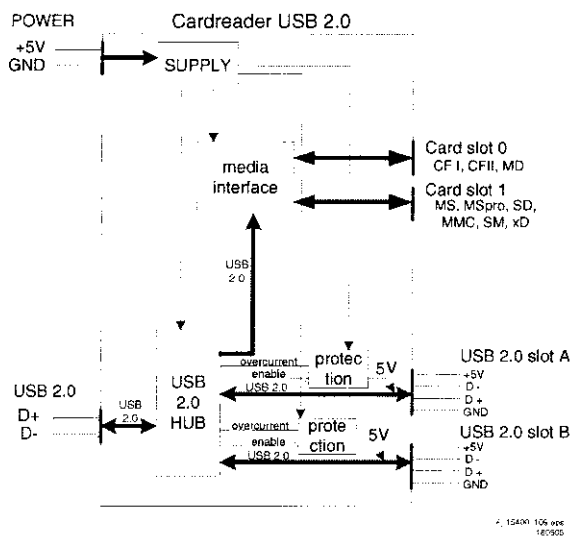

Figure 9-14 Multimedia card reader assy

USB2.0
A tandem USB connector (1H01) is mounted on the SSB, on which you can connect two USB devices (each port has a D+ and D- line; this is the differential signal path for USB); one device (hub) is the card-reader; only USB mass storage class device is supported, so other USB devices (card-readers) have to be compliant with this class.
The host (= SSB) needs to provide the power supply (coming from the Stand-by Supply) to the attached devices (like memory cards or other USB devices). Since it is not known what the customer will attach (e.g. a USB hub with multiple USB devices), and these USB devices draw current from the SSB, these supply lines must be protected against over-current and/or too many connected devices. Upon detecting an over-current condition, the hub device reports the over-current condition to the host and disables the power supply to the downstream port. This protection is done on a per-port basis. There are two downstream USB ports where the customer can attach bus-powered devices, two card slots and internal logic that needs power. So, the card reader is a self-powered device with a separate power connection (max. 1900 mA):
- Downstream USB port A: max. 500 mA
- Downstream USB port B: max. 500 mA
- Media interface: max. 500 mA

9.4.2 HDMI

Introduction
Note: Text below is an excerpt from the"HDMI Specification" that is issued by the HDMI founders (see *http://www.hdmi.org*).

This High-Definition Multimedia Interface is developed for transmitting digital television audiovisual signals from DVD players, set-top boxes and other audiovisual sources to television sets, projectors and other video displays.
HDMI can carry high quality multi-channel audio data and can carry all standard and high-definition consumer electronics video formats. Content protection technology is available. HDMI can also carry control and status information in both directions.

As shown in the HDMI block diagram, the HDMI connector carries four differential pairs that make up the TMDS (Transition Minimized Differential Signalling) data and clock channels. These channels are used to carry video, audio, and auxiliary data. In addition, HDMI carries a VESA DDC channel. The DDC is used for configuration and status exchange between a single source device and a single sink device.

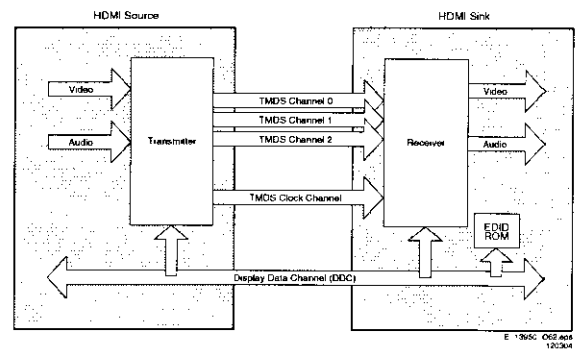

Figure 9-15 HDMI block diagram

Audio, video, and auxiliary data is transmitted across the three TMDS data channels. The video pixel clock is transmitted on the TMDS clock channel and is used by the receiver as a frequency reference for data recovery on the three TMDS data channels.

Video data is carried as a series of 24-bit pixels on the three TMDS data channels. TMDS encoding, converts the 8 bits per channel into the 10 bit DC-balanced transition minimized sequence, which is then transmitted serially across the pair at a rate of 10 bits per pixel clock period.
Video pixel rates can range from 25 MHz to 165 MHz. Video formats with rates below 25 MHz (e.g. 13.5 MHz for 480i/NTSC) can be transmitted using a pixel-repetition scheme. The video pixels can be encoded in either RGB, YC_BC_R 4:4:4, or YC_BC_R 4:2:2 formats. In all three cases, up to 24 bits per pixel can be transferred.

In order to transmit audio and auxiliary data across the TMDS channels, HDMI uses a packet structure. In order to attain the higher reliability required of audio and control data, this data is protected with a BCH error correction code and is encoded

using a special error reduction coding to produce the 10-bit word that is transmitted.
Basic audio functionality consists of a single IEC 60958 audio stream at sample rates of 32 kHz, 44.1 kHz, or 48 kHz. This can accommodate any normal stereo stream. Optionally, HDMI can carry a single such stream at sample rates up to 192 kHz or from two to four such streams (3 to 8 audio channels) at sample rates up to 96 kHz. HDMI can also carry IEC 61937 compressed (e.g. surround-sound) stream at sample rates up to 192 kHz.

The DDC is used by the source to read the sink's Enhanced Extended Display Identification Data (E-EDID) in order to discover the sink's configuration and/or capabilities.

HDMI is backward compatible with DVI (1.0). Compared with DVI, HDMI offers extra:
- YUV 4:4:4 (3 x 8-bit) or 4:2:2 (up to 2 x 12-bit), where DVI offers only RGB 4:4:4 (3 x 8 bit).
- Digital audio in CD quality (16-bit, 32/44.1/48 kHz), higher quality available (8 channels, 192 kHz).
- Remote control via CEC bus (Consumer Electronics Control): allows user to control all HDMI devices with the TV's remote control and menus.
- Smaller connector (SCART successor).
- Less cables: e.g. from 10 audio/9 video cables to 3 HDMI cables.

Implementation
The IC used is the TDA9975 (triple 10-bit video converter interface), item 7B11 on the SSB.
- Power supply: 3V3 and 1V8.
- Inputs:
  - HDMI connectors (Video, Audio, HDCP, Control).
  - Analogue (YPbPr, RGB, and H/V).
- Control signals:
  - I^2C coming from TDA9975 (MM-BUS1).
  - 13.5 MHz clock for analog format detection.
  - JTAG.
- Output to PNX2015: Video (DV4 and DV5):
  - YUV 4:2:2 20 bit (10 bit Y, 10 bit UV multiplexed) + clock + sync.
  - ITU-656 (compressed DVD video) encoded in data stream.
- Output to VIPER:
  - Audio: S/PDIF.
  - Interrupt signal.

Data Content

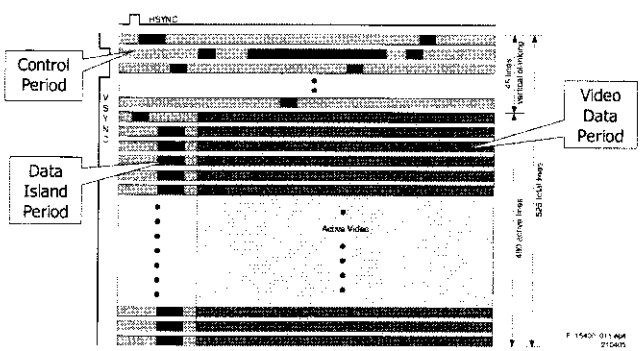

Figure 9-16 Typical video frame

A typical video frame is built up with the following info blocks:
- Control Period.
  - Transmission of the pre-amble.
  - Character synchronization.
- Data Island Period.
  - Audio and auxiliary information are carried in packets within a Data Island.
  - HSYNC, VSYNC are also carried during Data Island Period.
  - Packet Types:
    - Audio Sample.
    - Audio Clock Recovery.
    - InfoFrame: Aux. Video IF, Audio IF, MPEG IF, vendor-defined IF.
- Video Data Period.
  - Carries the pixels of an active video line.
  - TMDS encoding.

Data Islands: Audio Formats
- All current CE audio formats can be transmitted.
- Supports compressed formats like:
  - Dolby Digital.
  - Dolby Digital EX (THX-EX).
  - DTS.
  - Etc.
- Supports uncompressed formats ("discrete" PCM audio):
  - Up to 8 channels, up to 192 kHz, up to 24 bits.
- CD-quality audio is always available, so the user will always hear sound.
  - 2 channel, 16 bit at 32 kHz (STB), 44.1kHz (CD), or 48 kHz (DVD)

Data Islands: InfoFrames (EIA/CEA-861B)
- Auxiliary Video Information (AVI):
  - Specifies active aspect ratio, colorimetric info, pixel encoding, etc.
- Audio InfoFrame:
  - Describes audio stream, speaker/channel allocation, etc.
- Source Product Info:
  - Contains manufacturer name, product name, type, etc. (replaced by CEC).
- MPEG Source:
  - Contains flags that permit optimized display of de-compressed video.
- Vendor unique info.

Content Protection: HDCP
- HDCP (High-bandwidth Digital Content Protection) for HDMI encrypts and protects video, audio, and other auxiliary data.
- If a source device is HDCP coded and is connected to a HDTV display or projector via DVI/HDMI without the proper HDCP decoding mechanism, the picture is relegated to "snow" or in some cases, a very low (480p) resolution. In order to see HDTV with HDCP compliance, both the source and display devices must be equipped with DVI/HDMI connections that can enable HDCP using "software key" decoding.
- HDCP requires that decoding takes place in the display device (no external converters).

CEC Bus (Consumer Electronics Control)
- This is the successor of the P50 protocol.
- It allows the user to control all HDMI devices with the TV's remote control and menus.
- High-level functions such as "One-touch play".
- Optional for device to implement protocol.
- Mandatory to implement wire pass-through.

9.5 MPIF (PNX 3000)

9.5.1 Introduction

The MPIF (Multi Platform InterFace, type number PNX3000, item number 7C00) is an analogue video and audio pre-processing unit for the AVIP TV processor. It contains the high frequent IF part and all the analog video and audio source switching for external in- and outputs. The MPIF can handle CVBS, Y/C, RGB (1fH/2fH) and YPbPr (1fH/2fH) video signals as well as stereo, I²S, and second sound IF audio signals. The MPIF converts the selected video and audio streams from the analog to the digital domain. Via three high-speed serial data links (I²D), the digitized audio and video signals are streamed (594 Mbit/s) to the AVIP IC for further processing.
The MPIF uses a clock coming from the AVIP of 13.5 MHz (CLK_MPIF) and is I²C driven. The supply voltage for the MPIF is 5V.

The MPIF uses the following input signals:
- CVBS, Y/C, YPbPr, or RGB video format.
- 1fH or 2fH video.
- Clock 13.5 MHz from the AVIP.
- I²C from the VIPER.
- Clamping-pulse from the AVIP.

9.5.2 Block Diagram

Following figure shows the MPIF block diagram:

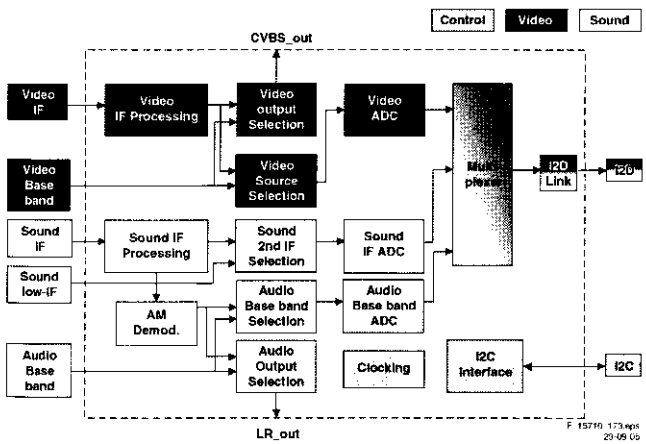

Figure 9-17 MPIF block diagram

9.5.3 IF Processing

The MPIF is capable of demodulation of RF signals.

Analogue Vision IF Processing
Some specifications:
- Synchronous demodulation of the IF vision carrier. Selectable frequency and auto-calibration of the VCO (Voltage controlled oscillator).
- Group delay correction for BG system.
- AGC at vision IF level to give fixed CVBS output level, and AGC at RF level (tuner AGC) to limit output level of the tuner.
- AGC gating for bad reception conditions.
- CVBS amplitude correction and mute.
- Detections for AFC and video presence.

The video signal is demodulated by means of an alignment-free PLL carrier regenerator with an internal VCO. This VCO is calibrated by means of a digital control circuit, which uses an external crystal frequency as reference. The frequency setting for the various standards (33.4, 33.9, 38.0, 38.9, 45.75 and 58.75 MHz) is realized via the I²C bus.

The AFC output is generated by the digital control circuit of the IF-PLL demodulator and can be read via the I²C bus.
The AGC-detector operates on "top sync" or "top white" level.
The MPIF IC has an integrated sound trap filter. The trap frequencies can be switched via the I²C-bus.
Also, a group delay correction filter is integrated. The filter can be switched between the PAL BG curve and a flat group delay response characteristic. This has the advantage that in multi-standard receivers the video SAW filter does not need to be switchable (cost effective).

Analogue Sound IF Processing
Some specifications:
- A switch to select QSS or inter-carrier mode.
- Sound carrier frequency conversion at second IF sound frequency (SSIF)
- A switch to select internal or external SSIF.
- AGC at sound IF level (for QSS (quasi-split-sound) mode) and AGC at SSIF level (for inter-carrier and QSS modes).
- Demodulation of AM modulated carrier (L and L' standards).

The MPIF has a separate sound IF input to enable Quasi Split Sound (QSS) applications. The sound IF amplifier is similar to the vision IF amplifier and has a gain control range of about 55 dB.
The AGC detector measures the SIF carrier levels (average level of AM or FM carriers) and ensures a constant signal amplitude for the AM demodulator and QSS mixer.
For applications without SIF SAW filter, the IC can also be used in intercarrier mode. In this mode, the composite video signal from the VIF amplifier is fed to the QSS mixer and converted to the intercarrier frequency. AM sound demodulation is realized in the analog domain with the QSS mixer.

9.5.4 Source Selection

Below the main functions and features of the main blocks in the MPIF for video and audio are explained.

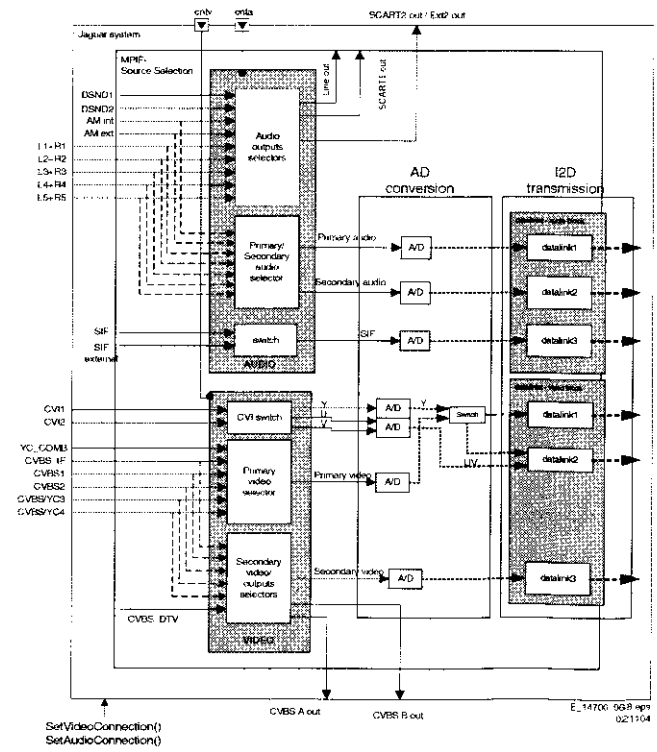

Figure 9-18 MPIF analog source selection block

Video Selectors

The CVI switch (Composite Video Input, including RGB, YUV, and YPbPr) is selecting the signal from one of the two CVI inputs; the output is always a YUV signal.
The primary video selector is selecting a signal from the CVBS and YC inputs; the video coding of the output signal equals to the video coding of the input signal.
The primary video selector has an extra input (YC_COMB), capable of selecting an Y/C signal from the comb filter. This input cannot be downscaled to a CVBS signal and fed back to the CVBS_A or CVBS_B output. It is also advisable not to connect other sources to the YC_COMB input because it is treated as an internal one that is not available for the outside world.
Two video output selectors are responsible for the contents of CVBS_A and CVBS_B video out.

Audio Selectors

The primary audio selector is selecting a signal from five external stereo inputs and one stereo input that handles two mono signals (AM internal and AM external). The AM internal signal is demodulated in the IF part and is internally routed, so not available as external input. Additionally, the AM internal signal is available on the left channel whereas the AM external signal is available on the right channel.
The secondary audio selector is selecting a signal from the same range as the primary audio selector; the second audio selector can work in stereo or mono mode. In case the stereo mode is selected, it is alike the primary audio selector. In mono mode, the input stereo signal L+R is transformed into a mono signal (L+R)/2 and put on the left channel of the stereo output. When the stereo input (handling two mono signals) is selected and the selector works in mono mode, the AMint and AMext can be swapped on the primary as well as on the secondary audio channel. It is also possible to digitize the mono + AM on the secondary audio channel.
Further it is possible to select the AM signal on the analog audio outputs independently from the AM signal that is selected for the secondary (digital) audio channel.
Three audio output selectors are responsible for the content of the Line, SCART1, and SCART2 outputs. These selectors allow selection of the output out of five L+R inputs, two mono signals (AM internal or AM external) and two externally connected DSND streams.

SIF Switching

SIF (Sound Intermediate Frequency) switching allows selecting between internal or external SIF signals.

AD Converters

The second part of the MPIF is responsible for conversion of the chosen signals into digital signals and grouping them into three data streams. Each data stream handles both video and audio. These data streams are fed into three data links and send via I2D to the outside.

The MPIF contains four video ADCs for analog and digital video broadcast signals. The clock frequency for these ADCs is either 27 MHz or 54 MHz. In some cases, two analog signals are multiplexed at the input of one ADC. In these cases, the clock frequency of the ADCs is 54 MHz, while the sample frequency for each of the two signals is 27 MHz.

The sample frequency for standard 1fH video signals is 27 MHz. For the YUV channel the sample frequency of the U and V components is half the sample frequency of the Y signal. For 2fH YPbPr or RGB input signals (for instance 480p or 1080i ATSC signals), the frequency that is used to sample the YUV signals is twice as high as for 1fH signals. The sample frequency is 54 MHz for Y and 27 MHz for U and V.
Due to the high sample frequency, two data links are needed for transport of the video data to the digital video processor.

I^2D Data Link

The digital interface between MPIF and AVIP is called Data Link (or I^2D Link). This is a serial interface that transfers the data from MPIF to AVIP over three Data Link interfaces. Each Data Link has a data signal and a strobe signal. The synchronization information is distributed over the data and the strobe signal. To minimize EMC, both signal outputs are low voltage differential swing signals, with a swing of about 300 mV.
Each Data Link has four lines, one differential pair for the data, and one differential pair for the strobe. The data rate is 594 Mbit/s. Each Data Link can carry two 27 MHz sampled video streams (or one 54 MHz sampled 2fH video stream) and two audio channels sampled at 6.75 MHz.

In the MPIF, the (video and audio) data to be transmitted is multiplexed in an output register of 44 bits (including the 2 bit sync information). The content of that 44 bits register is serial transmitted on one of the three data links. In the AVIP, the serial data is de-multiplexed into parallel streams. The data on the data link is divided in several groups of signals (video, audio and strobe signals). Obvious it is important that the transmitter and receiver are in the same transmitting mode

Data links can operate in two different modes called:
1. Normal mode.
2. YUV2fH.

Normal Mode

In the normal mode the content of the data links is as follows:

Table 9-2 Normal mode

Data Stream	Video	Audio
1	CVBS/YC primary	(L+R) primary
2	YUV 1fH	(L+R) secondary
3	CVBS secondary	SIF
Data link Mode bit: DM= 0		

In the normal mode the data links can handle up to three video signals: CVBS or YC signal from the primary video selector, CVI 1fH source selected on the CVI switch, and CVBS signal from the secondary video selector.

YUV 2fH Mode

In the YUV 2fH mode (higher bandwidth signal) the data links content is as follows:

Table 9-3 YUV 2fH mode

Data Stream	Video	Audio
1	Y 2fH	(L+R) primary
2	UV 2fH	(L+R) secondary
3	CVBS secondary	SIF
Data link Mode bit: DM= 1		

The data link 1 can output only one of two input signals: the output of the primary video selector or the Y output of the CVI switch. Only one can be active at a moment, and that is determined by the data link mode bit (DM). It means, that for data links working in YUV 2fH mode, the data link 1 carries the Y component of the YUV 2fH signal, the data link 2 carries the UV component, and the data link 3 contains the signal that is connected through the secondary video selector.

9.6 PNX2015

The functional blocks of the PNX2015 (item 7J00) are:
- Audio Video Input Processor (AVIP).
- 3D Comb Filter (COLUMBUS).
- High Definition MPEG Decoder (HD Subsystem).
- LVDS transmitter.
- Stand-by Processor for low-power control.

BLOCK DIAGRAM

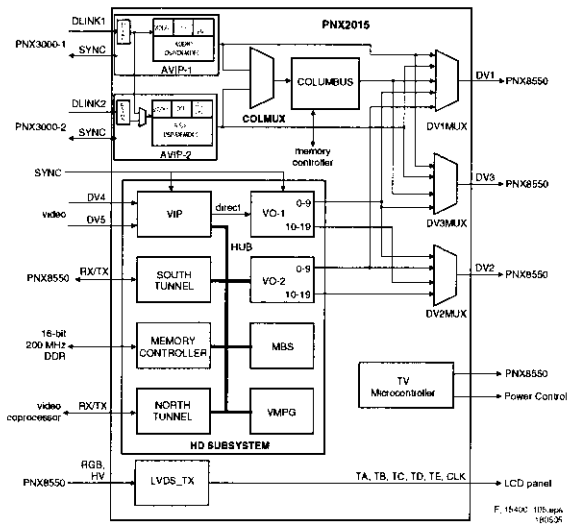

Figure 9-19 Block diagram PNX2015

These different blocks are described separately in the next paragraphs.

9.7 PNX2015: AVIP

9.7.1 Introduction

The AVIP (Audio Video Input Processor) receives the digital data via the I²D link (coming from MPIF). It reformats this data and maps (synchronizes) the data to the clock of the AVIP. Then a digital AGC is passed. After this, the video decoding is performed in the VIDDEC-block of the AVIP. The decoded video is sent to an output block, which formats the data to an ITU-656 compatible standard data stream.
The AVIP power supply is 1.2 V and 3.3 V. To ensure synchronization of video streams processed across the VIPER and PNX2015 devices, a 27 MHz is coming from the VIPER. The AVIP is I²C driven.
Initialization of this IC begins with a hard reset (MIPS-RESET) provided by the VIPER. Besides video decoding, the AVIP is also used for decoding and presentation of all audio output streams in the system.

9.7.2 Block Diagrams

Below the main functions and features in the AVIP for video and audio are given.

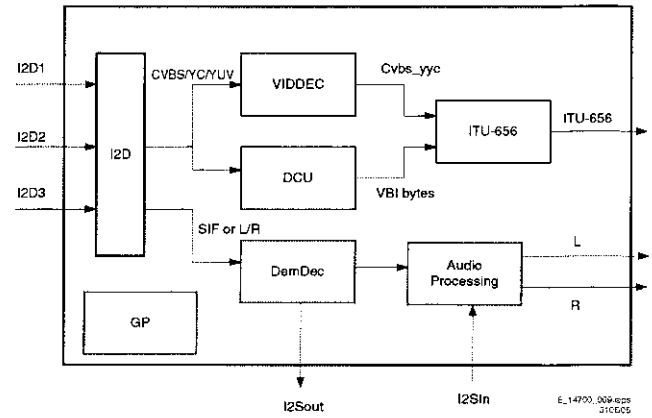

Figure 9-20 AVIP block diagram

Main AVIP function:
- I²D receiver.
- Colour decoding into ITU-601 compatible format (1fH/2fH).
- Interface with 3D comb filter (called Columbus in this chassis).
- VBI data capture via DCU (Teletext, CC, etc.).
- ITU-656 formatting.
- Audio demodulation and decoding via DEMDEC.
- Audio processing and D/A conversion.

I²D Receiver

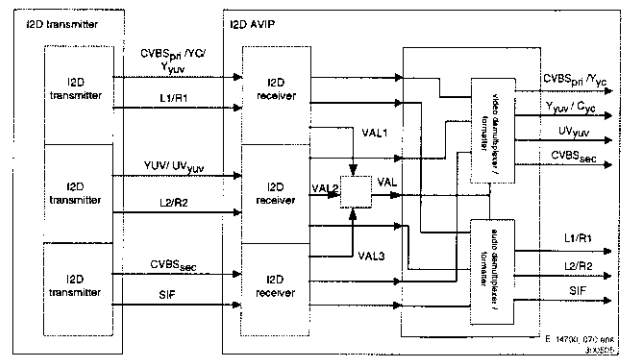

Figure 9-21 I²D receiver block diagram

The receiver block gets the serial data stream and converts it to a parallel stream. This parallel data is fed to the "de-multiplexer and formatter " block where the selected audio/ video stream is forwarded to the video and audio decoder for further processing. This communication bus is completely digital and very difficult to monitor.

The I²D link has the following characteristics.
- The data-link runs at 297 MHz / 594 Mbps.
- The driver rise/fall time is around 200 ps.
- The data-link uses differential signals.

VIDDEC (Video Decoder)

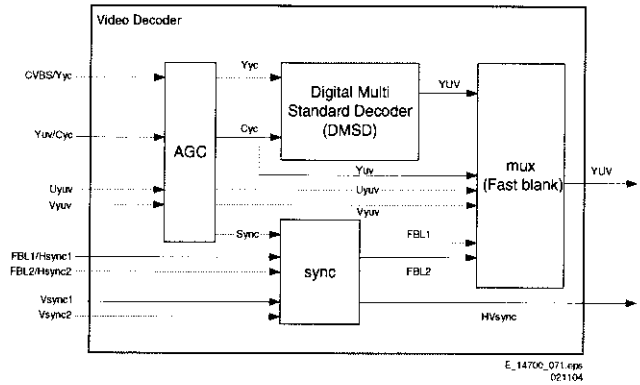

Figure 9-22 VIDDEC block diagram

The CVBS/YC/YUV signals (coming from the I²D receiver block) enter the DMSD block (Digital Multi Standard Decoder) via the AGC (Automatic Gain Control) block. The multiplexer block (MUX) takes care of the correct output signal. The sync signals are processed in the sync block.

The VIDDEC has the following main functions:

- Multi standard colour decoder.
- Automatic system recognition.
- Fully programmable static or automatic (AGC) for all analog video base band signals.
- AGC on sync amplitude in digital domain.
- Selectable peak white control.
- AGC for chrominance (PAL and NTSC only).
- Programmable Luminance and Chrominance bandwidth for CVBS and Y/C sources.
- Programmable clamp window for the selected video base band signals.
- Digital PLL for synchronization on 2fH and ATSC standards.
- Horizontal (including 3-level sync for 2fH) and vertical sync detection.
- Automatic detection of 50/60Hz ATSC field frequency.
- Adaptive 2/4-line delay comb filter for two-dimensional Chrominance/Luminance separation.
- Copy protected source detection according to MacroVision up to version 7.01
- Possibility of RGB insertion through fast blanking in CVBS input mode, not in Y/C.

DCU (Data Capturing Unit)

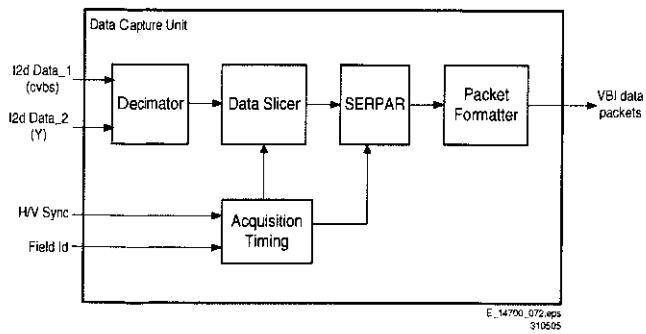

Figure 9-23 DCU block diagram

The purpose of this block is to acquire digital data (containing Teletext, Closed Captions, ...) from a CVBS/Y/C video input source. It performs processing on the received data and provides the data to the ITU-656 formatter unit.
The decimator reduces the sample rate (from 27 MHz to 13.5 MHz) of the incoming digitized CVBS or Y data stream from the I²D receiver. From the video input, the data slicer reconstructs the transmitted bit stream and associated clock. The SERPAR block converts the serial bits, coming from the data slicer, into parallel bytes. The packet processor performs data decoding and some error correction, assembles received bytes into packet structure, and streams out the data to the ITU-656 formatter.
The acquisition-timing block locks onto sync signals, and provides timing information to the other blocks of the data capture unit.

ITU656 Output Formatter

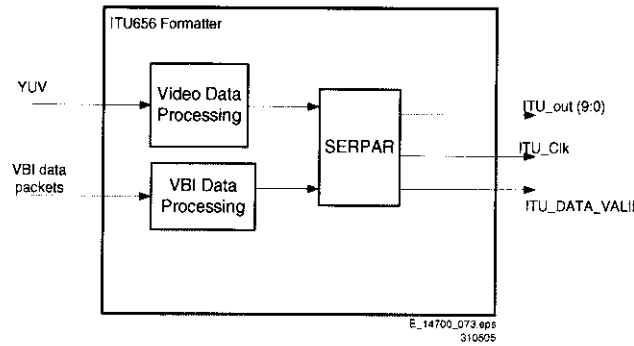

Figure 9-24 ITU656 formatter block diagram

The ITU656 formatter gets YUV data as video input signal, coming from the VIDDEC block. These YUV data are either decoded CVBS signals, matrixed RGB signals, or YUV input signals. The second input data are VBI sliced data coming from the DCU. The output of the ITU delivers a data stream, which is ITU-601/656/1364 compliant, and includes video as well as the VBI data.

DEMDEC (Demodulator and Decoder)

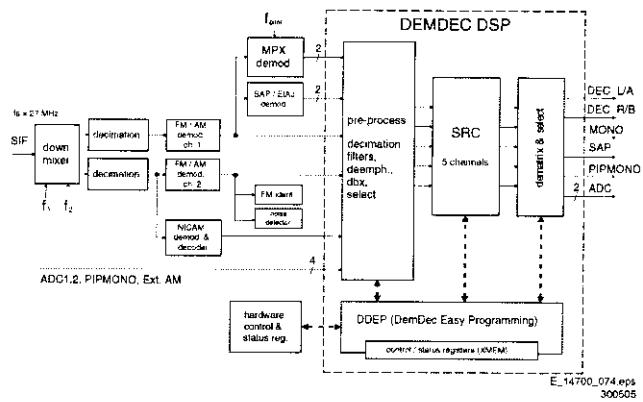

Figure 9-25 DEMDEC block diagram

The demodulator and decoder (DEMDEC) is responsible for demodulating and decoding incoming SIF signals.

The main features of the DEMDEC are:

- Auto Standard Detection (ASD).
- DQPSK demodulation for different standards, simultaneously with 1-channel demodulation.
- NICAM decoding (B/G, I, D/K, and L standard).
- Two-carrier multi standard FM demod. (B/G, D/K and M).
- Optional AM demodulation for system L, simultaneously with NICAM.
- Identification A2 systems (B/G, D/K and M standard) with different identification time constants.
- FM pilot carrier present detector.
- BTSC MPX decoder.
- SAP decoder.
- dBx noise reduction.
- Japan (EIAJ) decoder.
- FM radio decoder.

Audio Processing

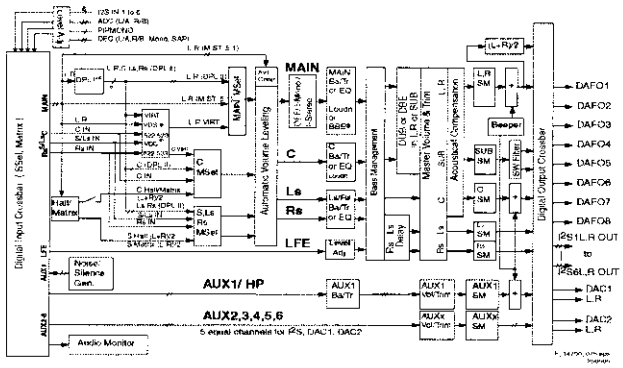

Figure 9-26 Audio processing block diagram

Main features are:

- Master volume control and Balance.
- Tone control (Loudness, Bass, Treble, Equalizer).
- Dolby ProLogic delay.
- Incredible Mono and Stereo.
- Virtual Dolby Surround (VDS 522, 523).
- Virtual Dolby Digital (VDD 522, 523).
- Digital audio I/O interface (stereo I2S input interface).
- Eight audio DACs for six channel loudspeaker outputs and stereo headphones output.
- Audio DACs for stereo SCART output and stereo LINE output.
- Serial data link interface for interfacing with the analog multi-purpose interface IC PNX3000 (MPIF).

9.8 PNX2015: Columbus (Comb Filter)

9.8.1 Introduction

This block provides the following picture improvement functions:

- Enhanced 2D combing for PAL and NTSC.
- 3D field combing for PAL and NTSC.
- 3D frame combing for PAL and NTSC.
- Spatial noise reduction for all component video standards.
- Temporal noise reduction for all component video standards.

The comb filter is controlled via a separate I^2C interface on the PNX2015, this is to ensure registers containing measurement information, are accessed at appropriate times. The measurement information is also available as ancillary data within the video stream (ITU-656).
For certain features of the comb filter, access to external memory is required. The PNX2015 has a unified memory that both comb filter and HD subsystem's share concurrently.

9.8.2 Block Diagram

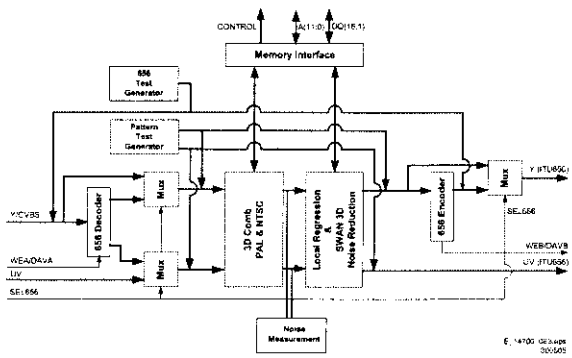

Figure 9-27 COLUMBUS internal block diagram

Figure above, shows a block diagram of the Columbus comb filter in the PNX2015 device. An input video signal is supplied by the AVIP and fed to the Columbus block. The signal is supplied in digitized components of:

- CVBS or Y.
- Uncombed U.
- Uncombed V.

The CVBS signal is combed, extracting the luminance components and rejecting the chroma components. The UV signals are combed, rejecting the left over luminance components, from a previous filtering (normally band pass filtered).

The outputs from the 3D comb filter are:

- Combed luminance signal (Y).
- Combed U signal.
- Combed V signal.

The output from the 3D comb filter feeds the SWAN and LORE noise reduction block, which performs spatial/temporal noise reduction, for both luminance and chrominance components.

Control Register Interface

The control registers are accessed via I^2C. Most signals that can be written via I^2C are double buffered. The fast I^2C interface implemented on the COLUMBUS is a 5V compliant, 400 kHz slave receiver/transmitter. The I^2C will not be blocked during voltage shorts or opens.

For the system dependent parameters of the 3D-Comb filter, five register banks are present. Data can be written in one of the banks via I^2C, by programming bits [2:0] of the SYSTEM_SELECT register. The bits [6:4] of the SYSTEM_SELECT register select, which register bank is used by Columbus to define the filter settings.

Bank number	System
0	PAL B, G, H, I, D, K
1	PAL M
2	PAL N
3	NTSC
4	Bypass

Internal Test Generators

There are two test generators inside the COLUMBUS chip:

- The "656 test generator" generates a 656 compliant stream and is used for testing the functionality of the 656 encoder and decoder. The 656 stream can be injected at the front end or the back end of the chip.
- A second internal test pattern generator enables testing of the device and attached external memory (if present). The test pattern generator signal can be inserted at the front end of the chip (passing through the 3D Comb and noise reduction system and external memory) or at the back end of the chip. Test patterns are available for both PAL/ SECAM and NTSC systems.

9.9 PNX2015: HD Subsystem

The HD subsystem performs MPEG video decoding on HD/SD transport streams. It interfaces with the PNX8550 (VIPER) and video co-processor (SPIDER) via tunnel interfaces, HD/SD using DV4 and DV5 inputs, and PNX8550 using DV1, DV2 and DV3 outputs. The HD subsystem can also perform a range of video measurements on a transport stream.

9.10 PNX2015: LVDS Transmitter (if used)

Low Voltage Differential Signalling (LVDS) is a low-power, low-noise differential technology for high speed data transmission over two PWB traces, or a balanced cable. LVDS allows single-channel data transmission at hundreds, or even up to a thousand Mbps. Low swing and current-mode driver outputs create low noise and provide very low power consumption across frequency ranges.
The LVDS transmitter IP provides a connection interface to FPDs.

Differences between standard and LVDS signalling:

- Standard single ended signal (TTL):
  - Requires 28 signal lines and more than 14 grounds.
  - Single ended signals up to 3 V.
  - Wide flat ribbon cable.
  - EMI/EMC problems.
  - Feasible up to VGA/NTSC resolution (limited to 250 Mb/s).
- LVDS:
  - Five low voltage (350 mV) differential pairs: one clock pair and four data pairs.
  - Five grounds.
  - EMI/EMC friendly.
  - WXGA and HD-1280x720p (up to 1 Gb/s).

LVDS offers superior performance compared to the standard single ended signal (TTL).
It is even "protocol independent" so it requires no software.

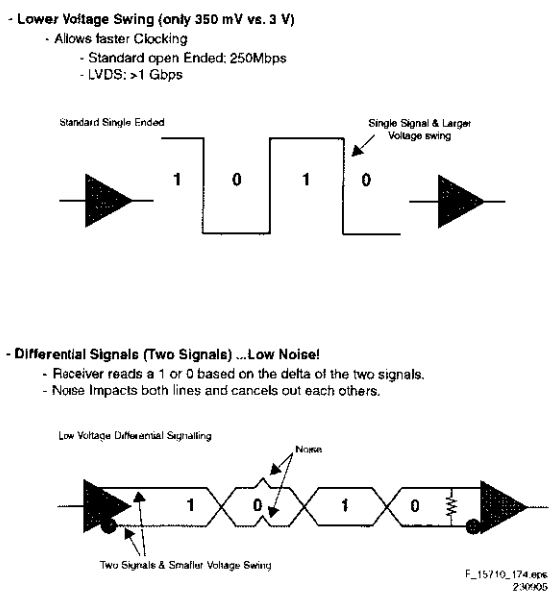

Figure 9-28 LVDS technology

The digital video output from the VIPER is connected to the display via the LVDS interface. This transmitter converts 28 bits of LVCMOS/LVTTL data into four LVDS (Low Voltage Differential Signalling) data streams. A phase-locked transmit clock is transmitted in parallel with the data streams over a fifth LVDS link. With every cycle of the transmit clock, 28 bits of input data are sampled and transmitted. At a transmit clock frequency of 85 MHz, 24 bits of RGB data and 3 bits of LCD timing and control data (FPLINE, FPFRAME, DRDY) are transmitted at a rate of 595 Mbps per LVDS data channel. Using a 85 MHz clock, the data throughput is 297.5 Mbytes/sec.

9.11 PNX2015: Stand-by Processor

9.11.1 Introduction

The Stand-by Processor's sub system is isolated from the other sub systems within thePNX2015. It has its own power supply (1.2V and 3.3V), together with separate clocking (16MHz) and reset. This allows for it to be active while all other sub systems are either inactive, via clock being disabled, or powered down.

The main tasks of the Stand-by Controller are:

- RC5/RC6 remote control handling.
- P50.
- Keyboard handling (side control, "on/off" switch).
- Detection and protection of the power supplies.
- Status detection on EXTernals.
- SAM/SDM entering.
- Provide boot-scripts to the VIPER.
- Start-up behaviour of the set; sequentially enabling the power supplies via the ENABLE lines.

9.11.2 TV Start-up Behaviour and Fault Detection

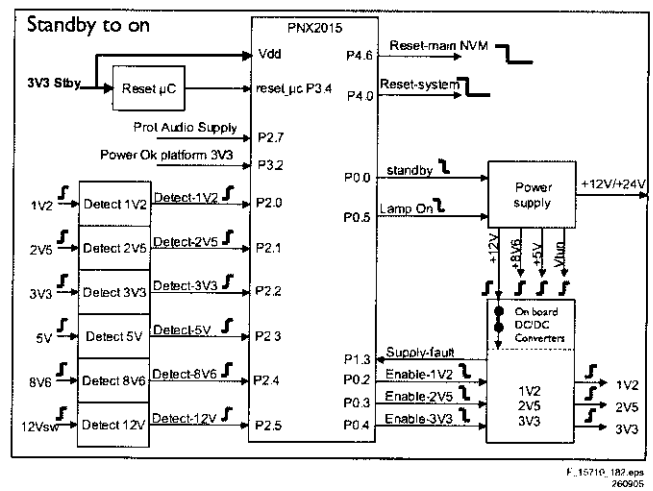

Figure 9-29 Start-up behaviour

1. The Stand-by Controller is powered by the +5V2 voltage (3V3_STBY voltage is derived from the +5V2), which becomes available when the set is connected to the Mains / AC Power.
2. By default, all I/O lines of the controller are "high", this state is also the state that will not trigger protections or cause supplies to rise, since enabling a supply requires that an IO line is pulled "low". Also all protections are active "low".
3. The 16 MHz crystal starts running.
4. Reset IC 7M03 will generate a RESET_STBY pulse.
5. All I/O lines will be set in default state, as "told" by the software.
   - RESET_SYSTEM will be "low" (this will hold the VIPER in reset).
   - LAMP_ON will be "low".
6. The system waits for an RC or functional switch command: when this command is "low" the set will start-up.

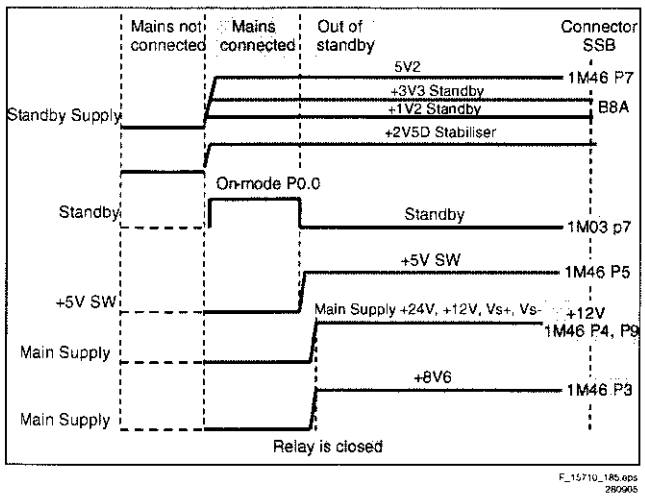

Figure 9-30 Timing chart power supplies

The Stand-by Microprocessor is responsible for the start-up of the VIPER, by providing the correct timing for the DC/DC converted voltages (for timing of DC/DC converter voltages see description in paragraph "Power Supply").
The DC/DC converters (via ENABLE) are switched "on" (active "low"). Once these voltages are switched "on", the Stand-by Controller is monitoring these voltages via a voltage detector circuit connected to port P2.x. When one of the voltages is missing, the fault detection will be active "low" on port P2.x. An error code will be written in the error buffer.
There is a common SUPPLY_FAULT line; connected to port P1.3 (INT5) that is active "low" when there is a problem detected on one of the DC/DC power supplies driver circuits. One input (P2.6) is used for the Audio Supply protection from the audio amplifier.
The RESET_SYSTEM line (P4.0) is "low" in Stand-by and at Start-up to keep the VIPER in reset state. Once the VIPER core supply is available, the RESET_SYSTEM line will become "high". The VIPER is starting up and will provide a RESET-MIPS active "high" to the Stand-by Processor P3.3, AVIP, and COLUMBUS.

9.11.3 Inputs/Outputs Stand-by Processor

The inputs on the Stand-by Microprocessor are used to detect the AV status from the front inputs (see also the control block diagram in chapter 6 "Block diagrams,...").
An UART communication line via an electronic switch is available on a connector and will be used for Service to communicate with ComPair. The UART line is switched to the Stand-by Processor when the UART_SWITCH line (P0.7) is "high". Otherwise it is switched to the VIPER.

9.12 SPIDER (T6TE0TBG)

9.12.1 Introduction

The SPIDER is a video co-processor and responsible for:
- Temporal Noise reduction.
- De-interlacing for HD signals.
- Temporal upconversion for SD signals.
- Vertical and Horizontal scaling.
- Pixel plus 2 processing.

9.12.2 Block Diagram

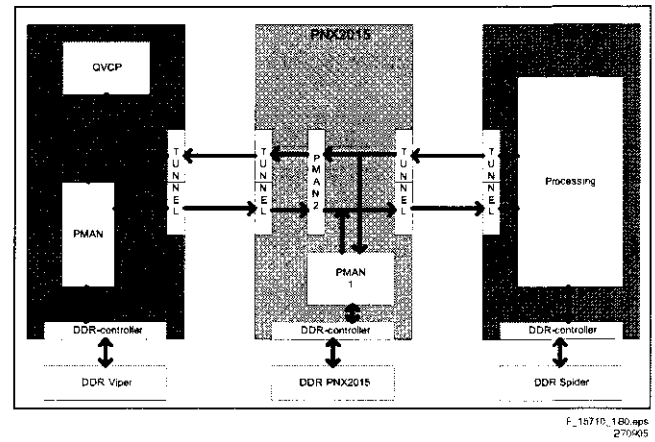

Figure 9-31 Tunnel bus block diagram

The most important connections:
- Tunnel bus to/from PNX2015.
- DDR interface to/from SPIDER DDR.
- Reset signal SPIDER (from VIPER).
- Clock input SPIDER (33MHz) (from PCI clock VIPER).
- IRQ SPIDER connects to VIPER.
- I²C connection with VIPER.

9.12.3 Temporal Noise Reduction

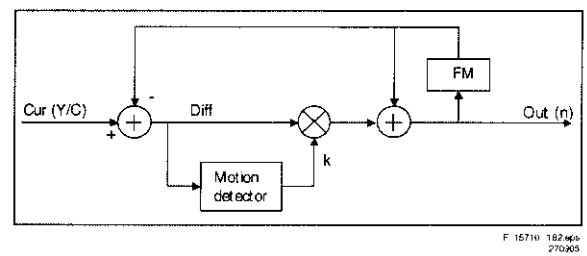

Figure 9-32 Temporal noise reduction

- For both luminance and colour difference signals.
- Motion compensated.

The previous field is subtracted from the current field, which will result in the difference between the two fields. With a static picture, the difference will be noise, with a dynamic picture it is not. That is why the delta is weighted by looking if there is movement or not. When there is a lot of movement, the output "k " will be "1", when there is little movement, "k" will be almost "0". If no movement is detected, the difference signal will be noise, and the output is not affected. When a lot of movement is detected, the difference signal will be added to the former field, because it is no noise.

9.12.4 De-interlacing For HD Signals

This function is calculating the missing lines of the interlaced input signal. There are different options for de-interlacing:
- Line repetition.
- Field insertion.
- Median filtering.
- Motion compensated de-interlacing.

Note: For SD signals, de-interlacing is done in the VIPER.

9.12.5 Temporal Upconversion For SD Signals

Only necessary with film input, not for video.

9.12.6 Vertical And Horizontal Scaling

Necessary when we have progressive frames on the correct output rate, but still not the correct resolution. This requires spatial horizontal and vertical upscaling to the correct output resolution.

9.12.7 PixelPlus 2 Processing

The Pixel plus 2 core consists out of different modules and each of them help us to create a sharper image.

- Vertical LTI and horizontal LTI, CTI.
- Vertical and horizontal peaking.
- Skin tone depending peaking.
- Colour features.
- Peaking dependent colour saturation.

9.13 VIPER 2 (PNX 8550)

9.13.1 Introduction

The PNX8550 is a highly integrated media processor intended for deployment in analog, digital, and hybrid TV receivers. It can be used for 100 Hz interlaced as well as 60 Hz progressive screens. It is fully capable of performing advanced video improvement algorithms, such as Digital Natural Motion™, on Standard Definition analog or digital sources. It includes an HD capable de-interlacer for converting interlaced HD transmission signals to progressive output for driving wide-XGA class Plasma or LCD displays. Two 32-bit 240 MHz VLIW media processors, referred to as the TriMedia TM3260 CPU core, carry out the advanced video improvement processing as well as all audio operations. Fixed hardware functions perform stable core video functions, such as picture level MPEG2 decoding, scaling, image composition and pixel post processing.

The PNX8550 provides a primary digital (YUV or RGB) output to connect to the display specific output processor. In addition, a secondary analog video output (CVBS or S-Video) for a VCR is available. This is the so-called DENC-out. It can operate either in analog PAL/NTSC or digital mode.

9.13.2 Block Diagram

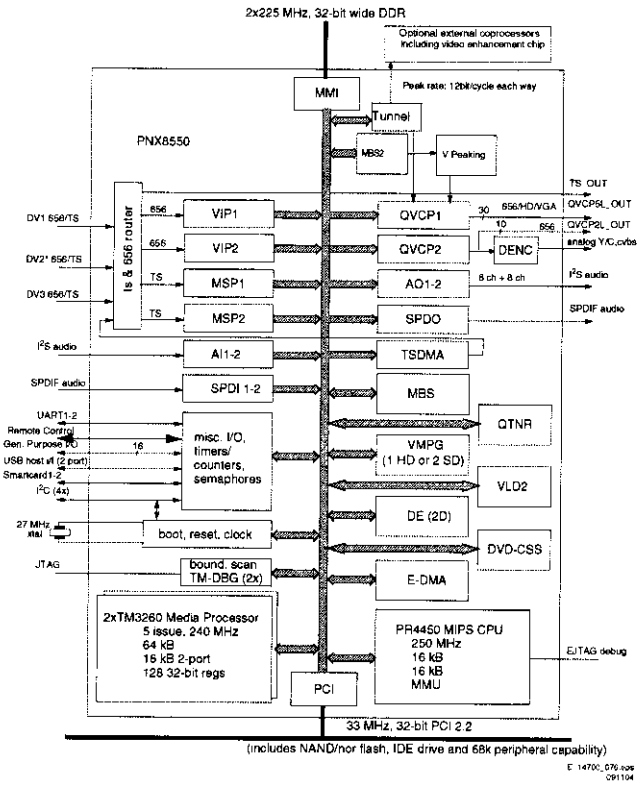

Figure 9-33 VIPER 2 internal block diagram

Control

An embedded MIPS32 processor (PR4450) running at 266 MHz is available to run the Operating System. The PR4450 processor is primarily responsible for running the demand paged graphics-intensive operating system, while the TM3260 media processors are responsible for running all real-time media functions. All hardware resources inside the PNX8550 are accessible by both the MIPS processor and the TM3260 CPUs. A "sandbox" style system protection provision ensures that selected MIPS memory regions and critical peripherals cannot be corrupted or inspected.

VIP (Video Input Processor)

The Video Input Processors (VIP) handles incoming digital video and processes it for use by other components of the PNX8550. It provides the following functions:

- Receives 10-bit YUV4:2:2 digital video data from the selected DVx video port (input signal coming from the AVIP or Columbus IC output). The data is dithered down to in-memory 8-bit data format.
- Performs horizontal down scaling or up scaling by 2x (not available in HD video capture mode).
- Provides an internal Test Pattern Generator with NTSC, PAL, and variable format support.
- Acquire VBI data using a separate acquisition window from the video acquisition window.
- ANC header decoding or window mode for VBI data extraction.
- Interrupt generation for VBI or video written to memory input mode.
- Colour space conversion (mutual exclusive with horizontal scaling).
- Raw data mode captures of 8- or 10-bit data.

MBS (Memory Based Scaler)

The PNX8550 contains a Memory Based Scaler that performs operation on images in main memory. The MBS can either be controlled task by task by a TM3260, or it can be given a list of

de-interlacing and scaling tasks. It reads images from memory, performs a transformation, and writes the result back in memory.

The MBS main features are:
- De-interlacing using either a median, 2-field majority select, or 3-field majority select algorithm with an edge detect/correct post-pass (these three provide increasing quality, at expense of increased bandwidth).
- Edge detect/correct on an input frame that has been software de-interlaced (this provides future capabilities in case we develop a better core de-interlacer than 3-field majority select).
- Horizontal and vertical scaling (on the input image, or on the result of edge detect/correct stage).
- Linear and non-linear aspect ratio conversion.
- Anti-flicker filtering.
- Conversions from any input pixel format to any non-indexed pixel format, including conversions between 4:2:0, 4:2:2 and 4:4:4, indexed to true colour conversion, colour expansion / compression, de-planarisation / planarisation (to convert between planar and packed pixel formats), programmable colour space conversion.

Supported video measurement functions during scaling or de-interlacing pass:
- Gather a histogram of luminance values (this data is used by software to control histogram modification).
- Measure noise level inside a rectangular window.
- Measure the lowest level luminance within a rectangular window (used to control black stretch in QVCP).
- Measure UV bandwidth inside a rectangular window.

QTNR (Quality Temporal Noise Reduction and Video Measurement)
The QTNR block has two primary functions: Temporal Noise Reduction: reading two video fields from memory, "current" (noisy) and "previous" (noise reduced) and producing a noise-reduced version of "current" in memory. While doing this, or as a separate "measurement only" pass, perform video measurements:
- Gather a histogram of luminance values (this data is used by software to control histogram modification).
- Measure noise level inside a rectangular window.
- Measure the lowest level luminance within a rectangular window (used to control black stretch in QVCP).
- Measure UV bandwidth inside a rectangular window.
- Measure the position of top and bottom black bars in the image.

QVCP (Quality Video Composition Processor)
The PNX8550 contains two QVCPs, which are responsible for combining and displaying video and graphics images from main memory. The primary QVCP serves as the main display pipeline, the second one is targeted to be connected to a record device (VCR). The primary QVCP allows composition of up to five layers, and can output in ITU-656/HD/VGA format in 10 bits per component up to 81 Mpix/s.

The secondary QVCP allows composition of up to two layers, can output in 656 10-bit component mode up to 81 MHz (40.5 Mpix/s). The secondary QVCP is connected to an on-chip Digital Video Encoder (DENC), allowing direct analog CVBS or S-video output.
In analog output mode, standard definition interlaced NTSC or PAL is supported (SCART2-out signal, for VCR-recording). The encoder has two DACs. DAC1 provides CVBS or luminance for S-video. DAC2 provides chrominance for S-video.
Internal sensors allow software to test loading on the S-video Chrominance line to decide whether to output luminance or CVBS on DAC1.

The primary and secondary QVCP each contain a series of layers and mixers. The QVCP creates a series of display data layers (pixel streams) and mixes them logically from back to front to create the composite output picture.

Some of the features the QVCP provides are:
- Video Quality Enhancement.
- Luminance Transient Improvement.
- Colour Dependent Sharpening.
- Horizontal Dynamic Peaking.
- Histogram Modification.
- Digital Colour Transient Improvement.
- Black Stretch.
- Skin Tone Correction.
- Blue Stretch and Green Enhancement.
- Video and Graphics horizontal up scaling.
- Colour space unification of all the display surfaces.
- Contrast and Brightness Control.
- Screen timing generation adopted to the connected display requirements (SD-TV standards, HD-TV standards, progressive, interlaced formats).

9.14 MOP

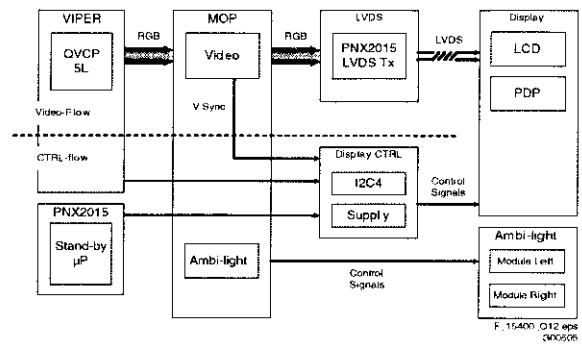

Figure 9-34 Block diagram of video output with MOP

In this chassis an EPLD (or MOP) is used for AmbiLight processing and for some picture enhancements, like blue and green stretch.

9.15 Ambient Light (if present)

9.15.1 Introduction

At the rear left and right side of the TV-set, three gas discharging lamps are mounted. With the red, green, and blue lamps, each colour can be made.

- Ambient light is adjustable with three variables: Hue, Saturation, and Brightness.
- Hue and saturation are controlled via menu control or via smart settings.
- The brightness is controlled via menu or via a cycle generator.
- The light sensor influences the brightness.
- Switching "on" or "off" goes via a ramp up or down.
- The ambient light may be active or passive.

In the user set up menu the following items are added:

- Ambient Light.
- Lights "On/Off".
- Ambient Light: "Personal/Normal/Warm/Cool".

Two extra keys are added on the Remote Control:

- ON/OFF: A (normal) press on this key switches the Ambient Light "On/Off".
- MODE: In case the set is "On", to toggle the smart modes.

Specifications:

- Lamp current frequency= 43 kHz.
- Lamp dimming frequency= 85 Hz.
- PWM duty cycle range= 30%
- Each lamp is only driven one third of the period to avoid crosstalk (drive lamps at 33.3% to have no losses in output).

This chassis features (software driven) stereo Ambilight.

9.15.2 Block Diagram

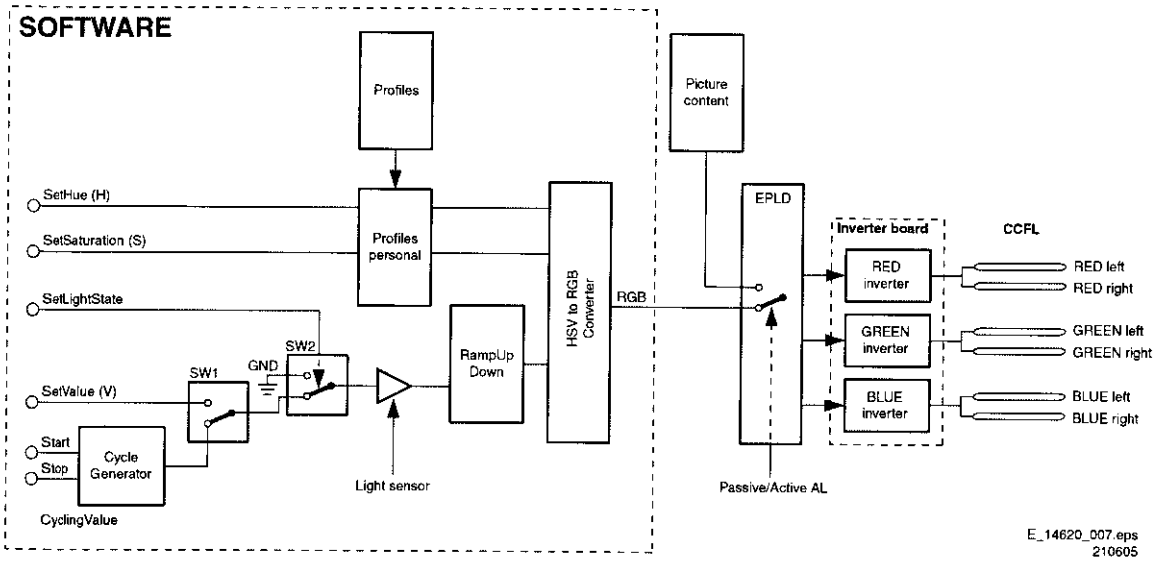

Figure 9-35 Ambient light block diagram

All mentioned blocks (from "Cycle Generator" to "HSV-to-RGB Converter" are implemented in the main software. Via I^2C, the RGB values are sent to the MOP (where a selection is made between "active" and "passive" mode) and again via I^2C the Inverter board is addressed.
In "passive" mode, the RGB values from the "HSV-to-RGB Converter" are used, while in "active" mode the picture content is used to steer the ambient lights.

Cycle Generator
The Cycle Generator (for fade in/out) starts with a long press on the "On/Off" button on the RC. It stops when the button is released.

Light Sensor
The light sensor influences the Brightness: when the room is darker, the ambient light is reduced. The amount of dimming is set according to an algorithm in the Auto TV software. In "active" Ambient Light mode, the light sensor does not influence the Brightness.

Ramp Up/Down
The brightness is changing with a speed from min. to max. in 2 s.

HSV to RGB Converter.
The HSV (Hue, Saturation, Value) values are converted to RGB values.

Outputs
The outputs are RGB values and can individually be decreased.

MOP (EPLD)
In "passive" mode, the EPLD sends the info from the OTC directly to the inverter board. In "active" mode, the EPLD calculates the RGB values. Hue and Saturation are not adjustable, Brightness is adjustable.

9.15.3 Inverter Board

General
Some specifications:

- There are three inverters to drive the lamps, each inverter drives the Left and Right lamp for one colour.
- DC-to-AC converter: 2.3 kV.
- Able to drive Cold Cathode Fluorescent Lamps (CCFL). There are two lamp units, three lamps (RGB) per unit= six lamps.
- The lamps are driven with Pulse Width Modulation (PWM).
- The inverters and lamps are supplied with 12V from main supply.

Addressing the two boards

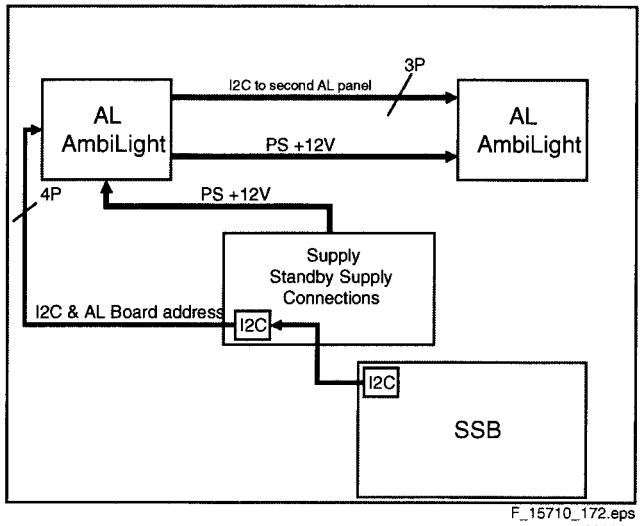

Figure 9-36 Ambilight board addressing

The Left and Right Ambi Light boards are the same on hardware level, but the boards are able to work on different I^2C addresses: 6Ah for the left board and 6Ch for the right board. The pre-programmed address depends on the value of the RXD pin (H or L).
The first AL board is connected to the SSB by a four -wire cable: I^2C, ground, and one extra wire. The extra wire of this cable is connected to ground on the SSB, in this way the first board will be selected.
From the first board to the second board a three-wire cable is used: I^2C and ground. The extra connection doesn't exist on the second board, so the board will be identified as "AL 2".
Pin 4 of connector 1M49 is connected to RXD line of the microprocessor. This connection is connected to ground on the SSB. The AL board, is programmed in such a way that it can change his address, depending of the value at the RXD input pin at start-up.

9.16 Abbreviation List

0/6/12	SCART switch control signal on A/V board. 0 = loop through (AUX to TV), 6 = play 16:9 format, 12 = play 4:3 format
2DNR	Spatial (2D) Noise Reduction
3DNR	Temporal (3D) Noise Reduction
AARA	Automatic Aspect Ratio Adaptation: algorithm that adapts aspect ratio to remove horizontal black bars; keeps the original aspect ratio
ACI	Automatic Channel Installation: algorithm that installs TV channels directly from a cable network by means of a predefined TXT page
ADC	Analogue to Digital Converter
AFC	Automatic Frequency Control: control signal used to tune to the correct frequency
AGC	Automatic Gain Control: algorithm that controls the video input of the feature box
AM	Amplitude Modulation
ANR	Automatic Noise Reduction: one of the algorithms of Auto TV
AP	Asia Pacific
AR	Aspect Ratio: 4 by 3 or 16 by 9
ASF	Auto Screen Fit: algorithm that adapts aspect ratio to remove horizontal black bars without discarding video information
ATSC	Advanced Television Systems Committee, the digital TV standard in the USA
ATV	See Auto TV
Auto TV	A hardware and software control system that measures picture content, and adapts image parameters in a dynamic way
AV	External Audio Video
AVIP	Audio Video Input Processor
B/G	Monochrome TV system. Sound carrier distance is 5.5 MHz
BTSC	Broadcast Television Standard Committee. Multiplex FM stereo sound system, originating from the USA and used e.g. in LATAM and AP-NTSC countries
B-TXT	Blue TeleteXT
C	Centre channel (audio)
CEC	Consumer Electronics Control bus: remote control bus on HDMI connections
CL	Constant Level: audio output to connect with an external amplifier
COLUMBUS	COlour LUMinance Baseband Universal Sub-system
ComPair	Computer aided rePair
CP	Connected Planet / Copy Protection
CSM	Customer Service Mode
CTI	Colour Transient Improvement: manipulates steepness of chroma transients
CVBS	Composite Video Blanking and Synchronization
DAC	Digital to Analogue Converter
DBE	Dynamic Bass Enhancement: extra low frequency amplification
DDC	See "E-DDC"
D/K	Monochrome TV system. Sound carrier distance is 6.5 MHz
DFU	Directions For Use: owner's manual
DMR	Digital Media Reader: card reader

DNR	Digital Noise Reduction: noise reduction feature of the set
DRAM	Dynamic RAM
DRM	Digital Rights Management
DSP	Digital Signal Processing
DST	Dealer Service Tool: special remote control designed for service technicians
DTCP	Digital Transmission Content Protection; A protocol for protecting digital audio/video content that is traversing a high speed serial bus, such as IEEE-1394
DVD	Digital Versatile Disc
DVI(-d)	Digital Visual Interface (d= digital only)
E-DDC	Enhanced Display Data Channel (VESA standard for communication channel and display). Using E-DDC, the video source can read the EDID information form the display.
EDID	Extended Display Identification Data (VESA standard)
EEPROM	Electrically Erasable and Programmable Read Only Memory
EMI	Electro Magnetic Interference
EPLD	Erasable Programmable Logic Device
EU	Europe
EXT	EXTernal (source), entering the set by SCART or by cinches (jacks)
FBL	Fast BLanking: DC signal accompanying RGB signals
FDS	Full Dual Screen (same as FDW)
FDW	Full Dual Window (same as FDS)
FLASH	FLASH memory
FM	Field Memory or Frequency Modulation
FTV	Flat TeleVision
Gb/s	Giga bits per second
G-TXT	Green TeleteXT
H	H_sync to the module
HD	High Definition
HDD	Hard Disk Drive
HDCP	High-bandwidth Digital Content Protection: A "key" encoded into the HDMI/DVI signal that prevents video data piracy. If a source is HDCP coded and connected via HDMI/DVI without the proper HDCP decoding, the picture is put into a "snow vision" mode or changed to a low resolution. For normal content distribution the source and the display device must be enabled for HDCP "software key" decoding.
HDMI	High Definition Multimedia Interface
HP	HeadPhone
I	Monochrome TV system. Sound carrier distance is 6.0 MHz
I^2C	Inter IC bus
I^2D	Inter IC Data bus
I^2S	Inter IC Sound bus
IF	Intermediate Frequency
Interlaced	Scan mode where two fields are used to form one frame. Each field contains half the number of the total amount of lines. The fields are written in "pairs", causing line flicker.
IR	Infra Red
IRQ	Interrupt Request
ITU-656	The ITU Radio communication Sector (ITU-R) is a standards body subcommittee of the International Telecommunication Union relating to radio communication. ITU-656 (a.k.a. SDI), is a digitized video format used for broadcast grade video. Uncompressed digital component or digital composite signals can be used. The SDI signal is self-synchronizing, uses 8 bit or 10 bit data words, and has a maximum data rate of 270 Mbit/s, with a minimum bandwidth of 135 MHz.
ITV	Institutional TeleVision; TV sets for hotels, hospitals etc.
JOP	Jaguar Output Processor
LS	Last Status; The settings last chosen by the customer and read and stored in RAM or in the NVM. They are called at start-up of the set to configure it according to the customer's preferences
LATAM	Latin America
LCD	Liquid Crystal Display
LED	Light Emitting Diode
L/L'	Monochrome TV system. Sound carrier distance is 6.5 MHz. L' is Band I, L is all bands except for Band I
LORE	LOcal REgression approximation noise reduction
LPL	LG.Philips LCD (supplier)
LS	Loudspeaker
LVDS	Low Voltage Differential Signalling
Mbps	Mega bits per second
M/N	Monochrome TV system. Sound carrier distance is 4.5 MHz
MIPS	Microprocessor without Interlocked Pipeline-Stages; A RISC-based microprocessor
MOP	Matrix Output Processor
MOSFET	Metal Oxide Silicon Field Effect Transistor, switching device
MPEG	Motion Pictures Experts Group
MPIF	Multi Platform InterFace
MUTE	MUTE Line
NC	Not Connected
NICAM	Near Instantaneous Compounded Audio Multiplexing. This is a digital sound system, mainly used in Europe.
NTC	Negative Temperature Coefficient, non-linear resistor
NTSC	National Television Standard Committee. Colour system mainly used in North America and Japan. Colour carrier NTSC M/N= 3.579545 MHz, NTSC 4.43= 4.433619 MHz (this is a VCR norm, it is not transmitted off-air)
NVM	Non-Volatile Memory: IC containing TV related data such as alignments
O/C	Open Circuit
OSD	On Screen Display
OTC	On screen display Teletext and Control; also called Artistic (SAA5800)
P50	Project 50: communication protocol between TV and peripherals
PAL	Phase Alternating Line. Colour system mainly used in West Europe (colour carrier= 4.433619 MHz) and South America (colour carrier PAL M= 3.575612 MHz and PAL N= 3.582056 MHz)
PCB	Printed Circuit Board (same as "PWB")
PCM	Pulse Code Modulation
PDP	Plasma Display Panel
PFC	Power Factor Corrector (or Pre-conditioner)
PIP	Picture In Picture

PLL	Phase Locked Loop. Used for e.g. FST tuning systems. The customer can give directly the desired frequency
POR	Power On Reset, signal to reset the uP
Progressive Scan	Scan mode where all scan lines are displayed in one frame at the same time, creating a double vertical resolution.
PTC	Positive Temperature Coefficient, non-linear resistor
PWB	Printed Wiring Board (same as "PCB")
PWM	Pulse Width Modulation
QTNR	Quality Temporal Noise Reduction
QVCP	Quality Video Composition Processor
RAM	Random Access Memory
RGB	Red, Green, and Blue. The primary colour signals for TV. By mixing levels of R, G, and B, all colours (Y/C) are reproduced.
RC	Remote Control
RC5 / RC6	Signal protocol from the remote control receiver
RESET	RESET signal
ROM	Read Only Memory
R-TXT	Red TeleteXT
SAM	Service Alignment Mode
S/C	Short Circuit
SCART	Syndicat des Constructeurs d'Appareils Radiorecepteurs et Televisieurs
SCL	Serial Clock I^2C
SCL-F	CLock Signal on Fast I^2C bus
SD	Standard Definition
SDA	Serial Data I^2C
SDA-F	DAta Signal on Fast I^2C bus
SDI	Serial Digital Interface, see "ITU-656"
SDRAM	Synchronous DRAM
SECAM	SEequence Couleur Avec Memoire. Colour system mainly used in France and East Europe. Colour carriers= 4.406250 MHz and 4.250000 MHz
SIF	Sound Intermediate Frequency
SMPS	Switched Mode Power Supply
SOG	Sync On Green
SOPS	Self Oscillating Power Supply
S/PDIF	Sony Philips Digital InterFace
SRAM	Static RAM
SSB	Small Signal Board
STBY	STand-BY
SVGA	800x600 (4:3)
SVHS	Super Video Home System
SW	Software
SWAN	Spatial temporal Weighted Averaging Noise reduction
SXGA	1280x1024
TFT	Thin Film Transistor
THD	Total Harmonic Distortion
TMDS	Transmission Minimized Differential Signalling
TXT	TeleteXT
TXT-DW	Dual Window with TeleteXT
uP	Microprocessor
UXGA	1600x1200 (4:3)
V	V-sync to the module
VCR	Video Cassette Recorder
VESA	Video Electronics Standards Association
VGA	640x480 (4:3)
VL	Variable Level out: processed audio output toward external amplifier
VSB	Vestigial Side Band; modulation method
WYSIWYR	What You See Is What You Record: record selection that follows main picture and sound
WXGA	1280x768 (15:9)
XTAL	Quartz crystal
XGA	1024x768 (4:3)
Y	Luminance signal
Y/C	Luminance (Y) and Chrominance (C) signal
YPbPr	Component video. Luminance and scaled colour difference signals (B-Y and R-Y)
YUV	Component video

9.17 IC Data Sheets

This section shows the internal block diagrams and pin configurations of ICs that are drawn as "black boxes" in the electrical diagrams (with the exception of "memory" and "logic" ICs).

9.17.1 Diagram A1, AVS1ACP08 (IC 7805)

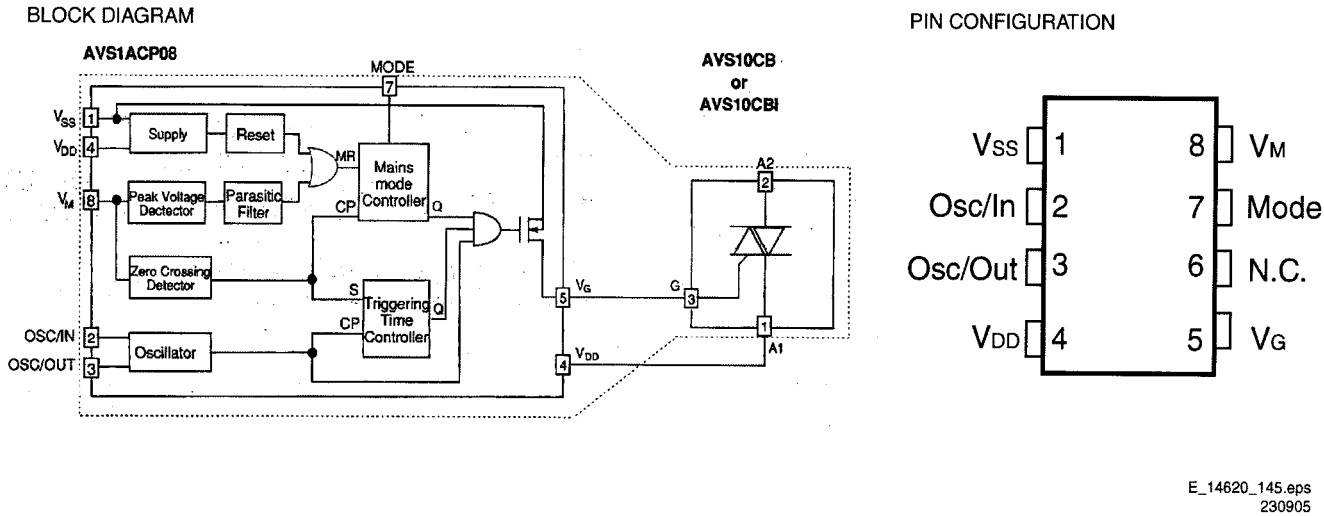

E_14620_145.eps
230905

Figure 9-37 Internal block diagram and pin configuration

9.17.2 Diagram A2, MC34067P (IC 7001)

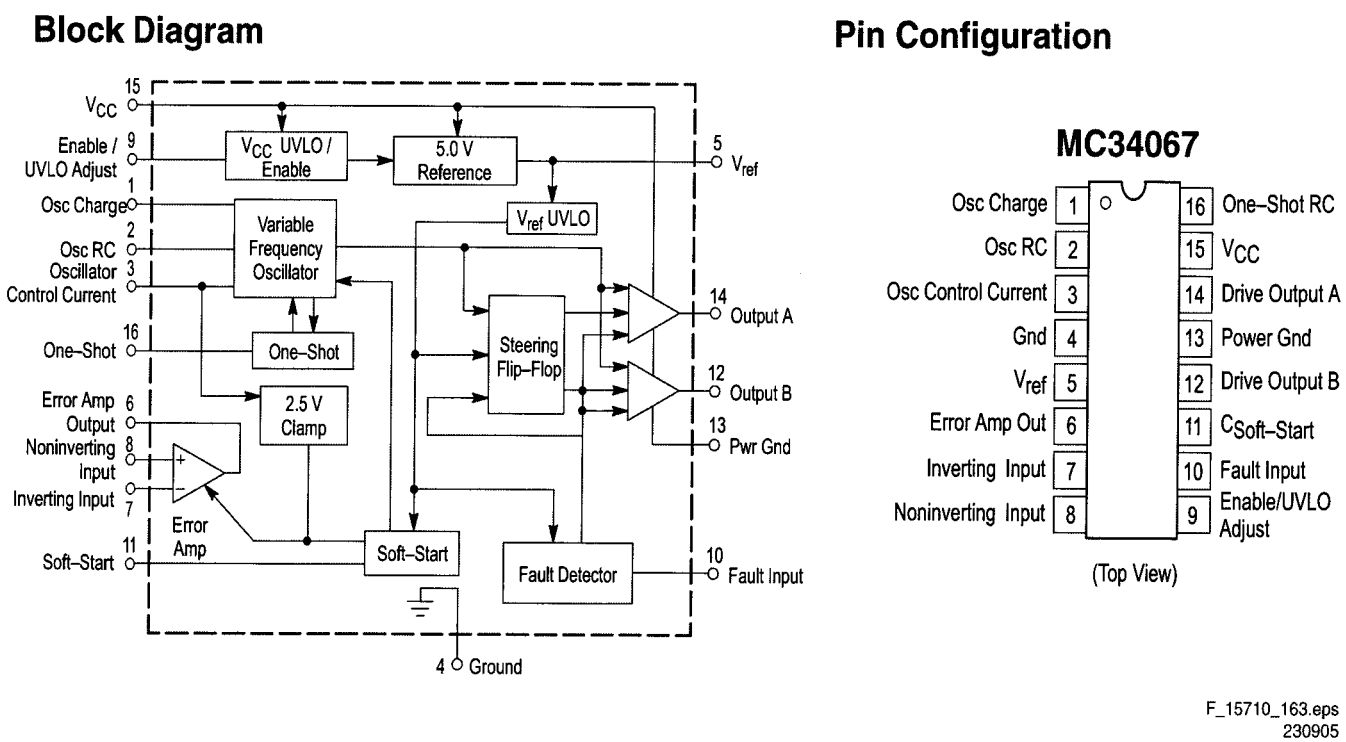

F_15710_163.eps
230905

Figure 9-38 Internal block diagram and pin configuration

9.17.3 Diagram B4x, PNX3000HL (IC 7C00)

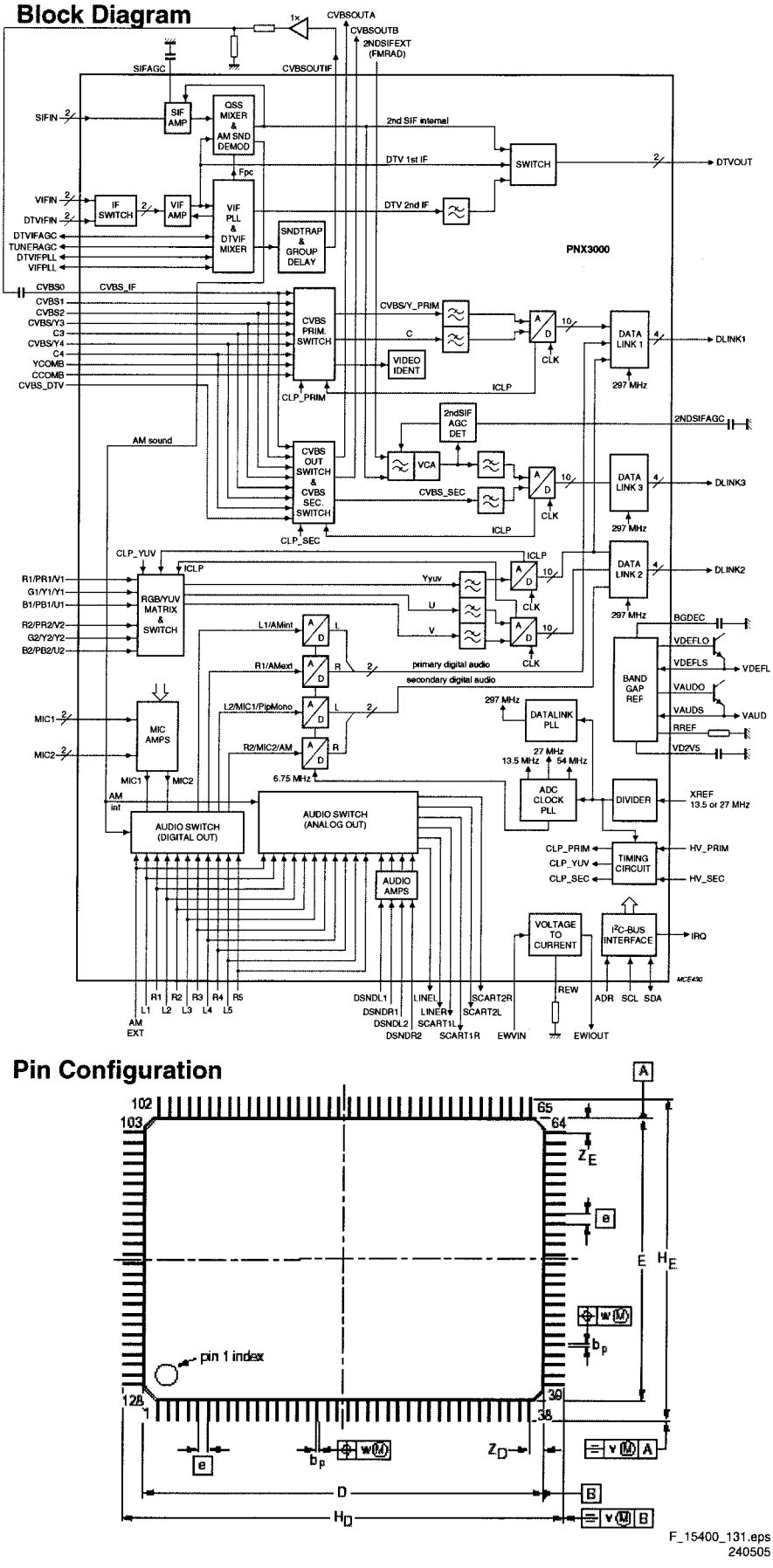

Figure 9-39 Internal block diagram and pin configuration

9.17.4 Diagram B4x, PNX2015E (IC 7J00)

Block Diagram

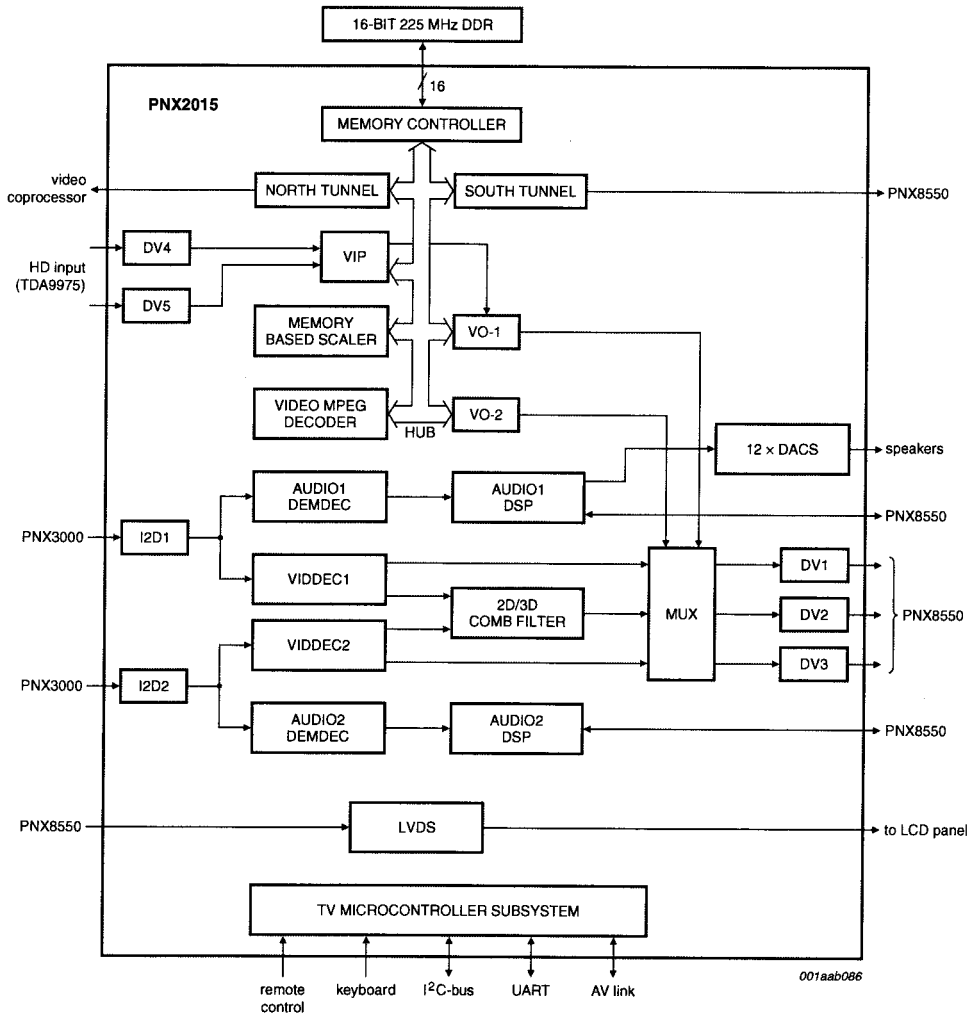

Pin Configuration

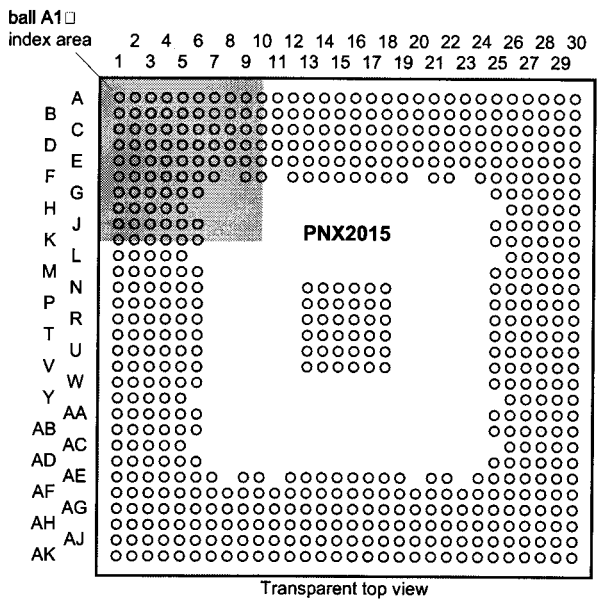

F_15400_132.eps
240505

Figure 9-40 Internal block diagram and pin configuration

9.17.5 Diagram B6x, T6TE0TBG SPIDER (IC 7R00)

Pin Configuration

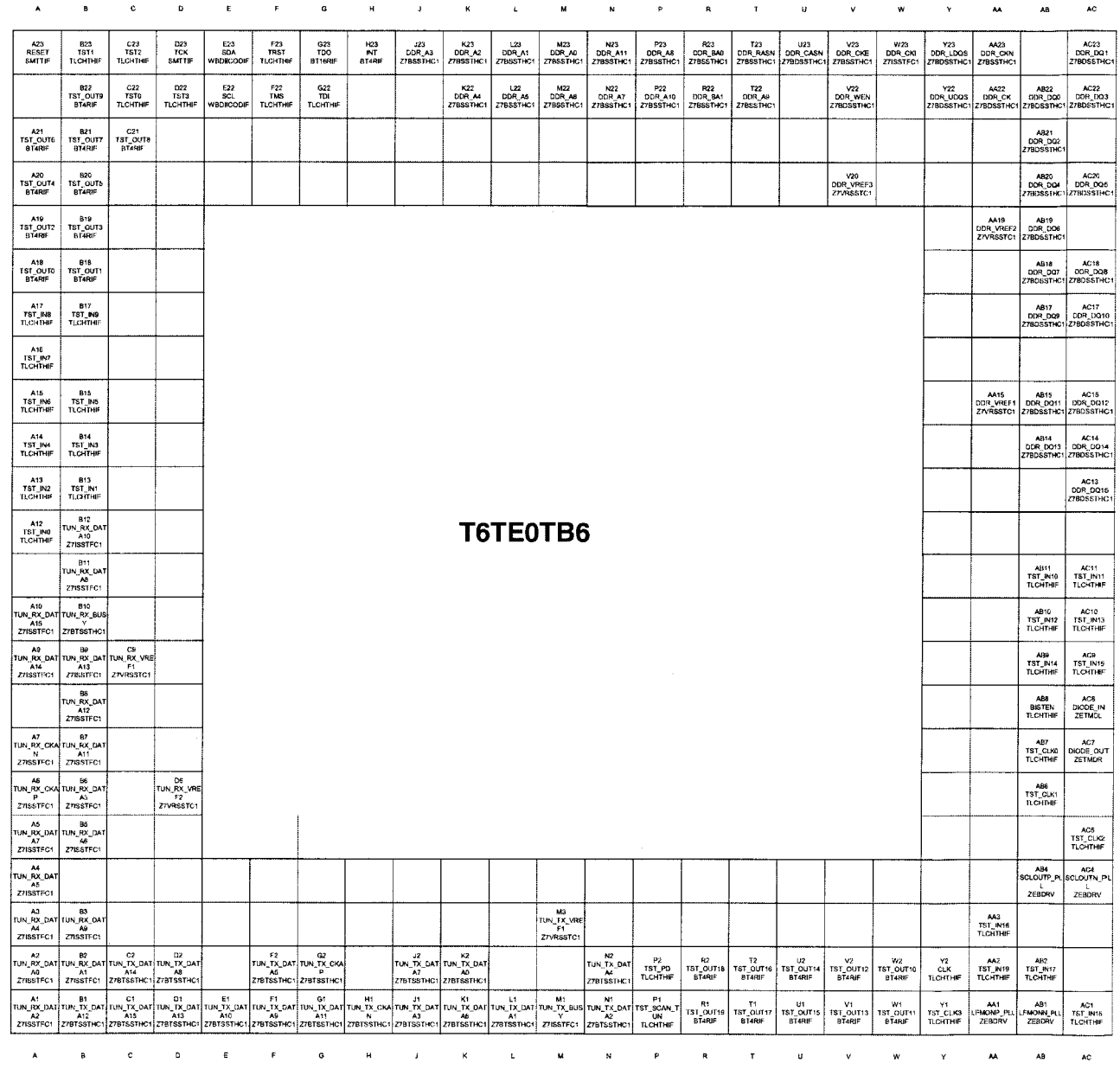

F_15710_164.eps
220905

Figure 9-41 Pin configuration

9.17.6 Diagram B7x, PNX8550EH (IC 7V00)

Block Diagram

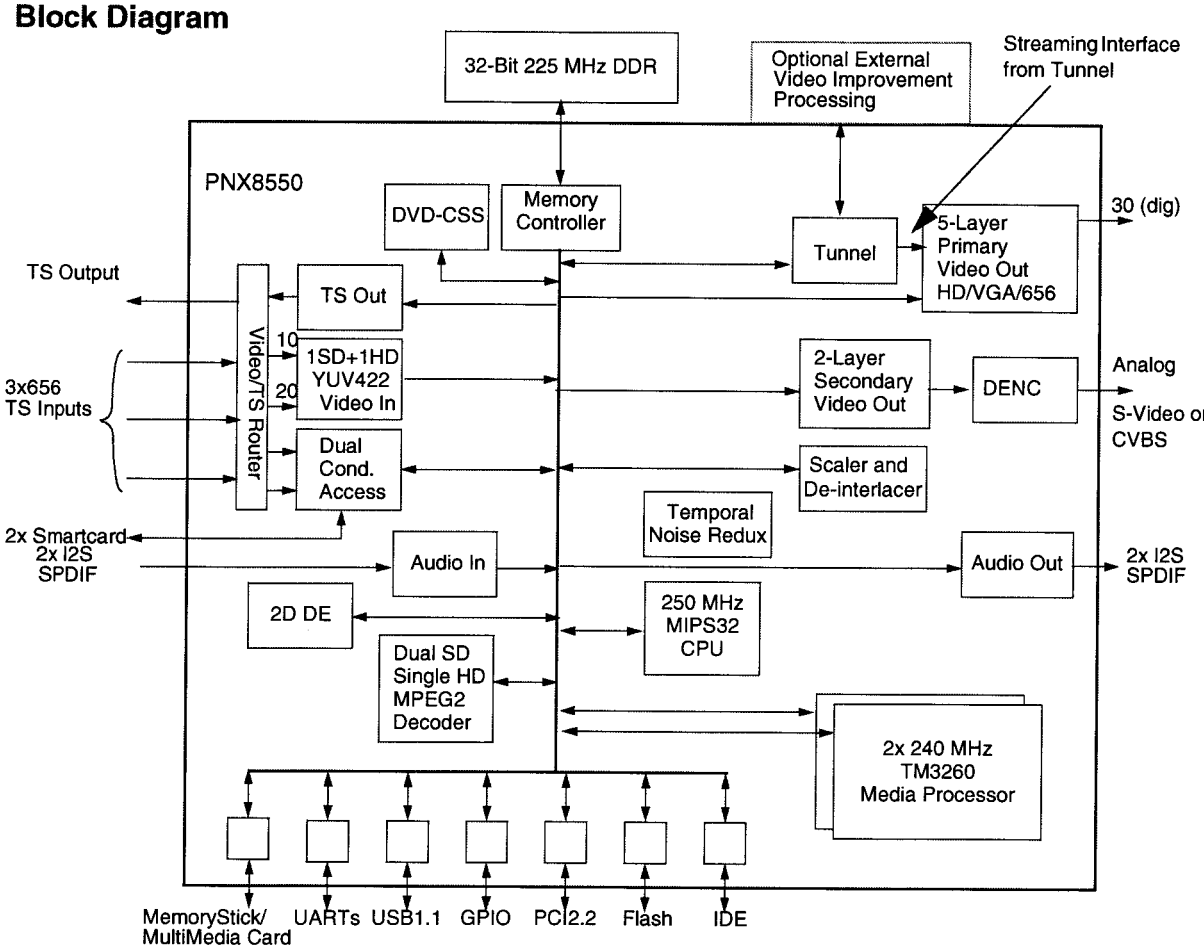

Pin Configuration

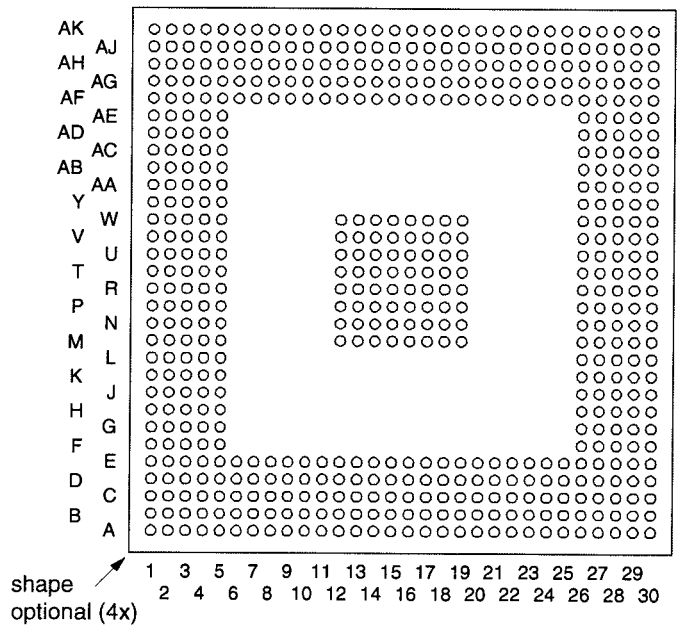

E_14700_088.eps
250505

Figure 9-42 Internal block diagram and pin configuration

9.17.7 Diagram B7A, LM3526MX (IC 7Q01)

Block Diagram

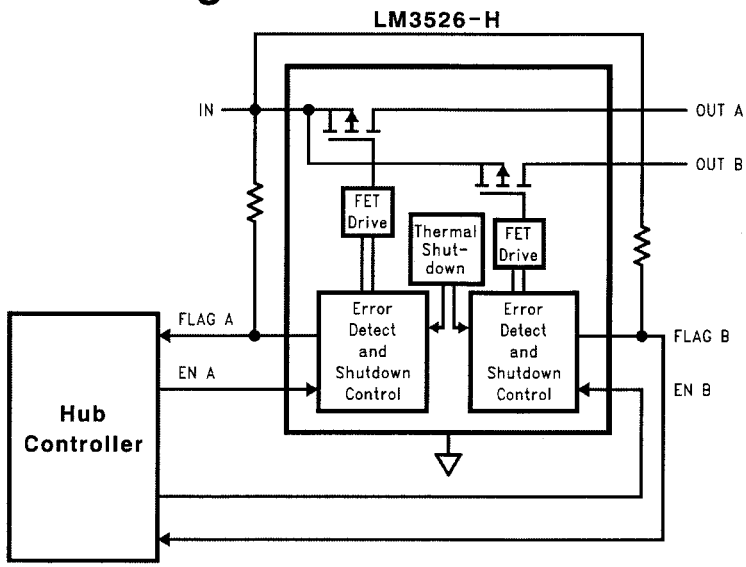

Pin Configuration

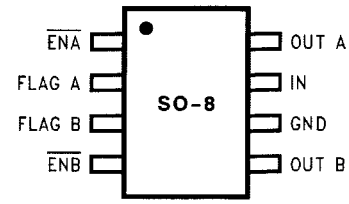

LM3526-L

F_15400_134.eps
230905

Figure 9-43 Internal block diagram and pin configuration

9.17.8 Diagram B8A, NCP303LSN (IC 7LB0 - 7LB4)

Block Diagram

NCP303LSNxxT1
Open Drain Output Configuration

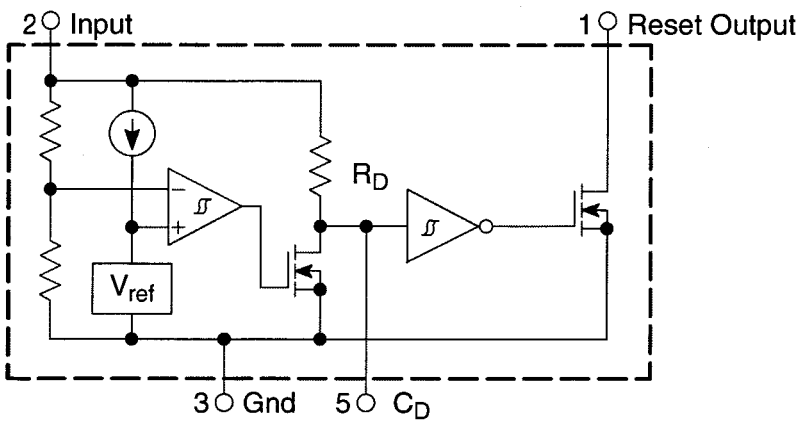

Pin Configuration

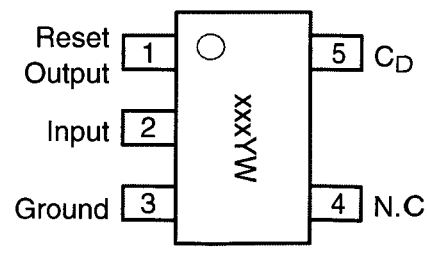

xxx = 302 or 303
Y = Year
W = Work Week

(Top View)

F_15400_133.eps
230905

Figure 9-44 Internal block diagram and pin configuration

9.17.9 Diagram B8B, CY2305SC-1 (IC 7J08)

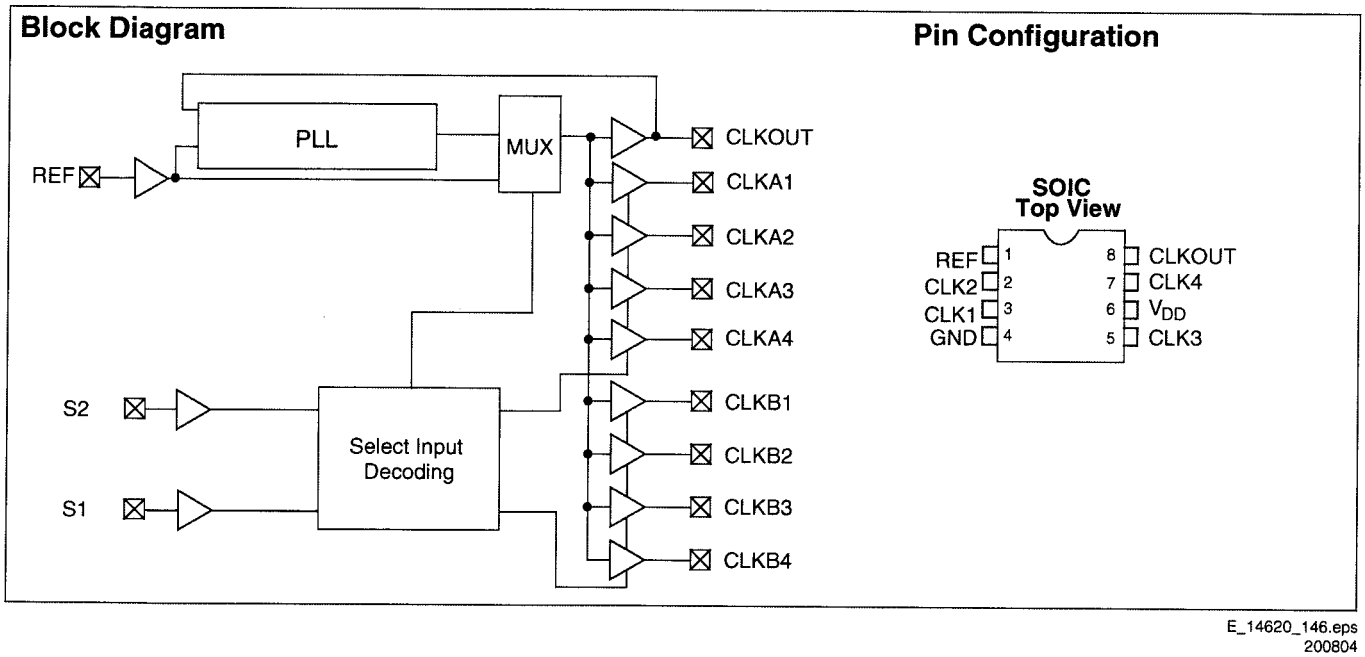

E_14620_146.eps
200804

Figure 9-45 Internal block diagram and pin configuration

9.17.10 Diagram B9A, LD2985BM (IC 7G00)

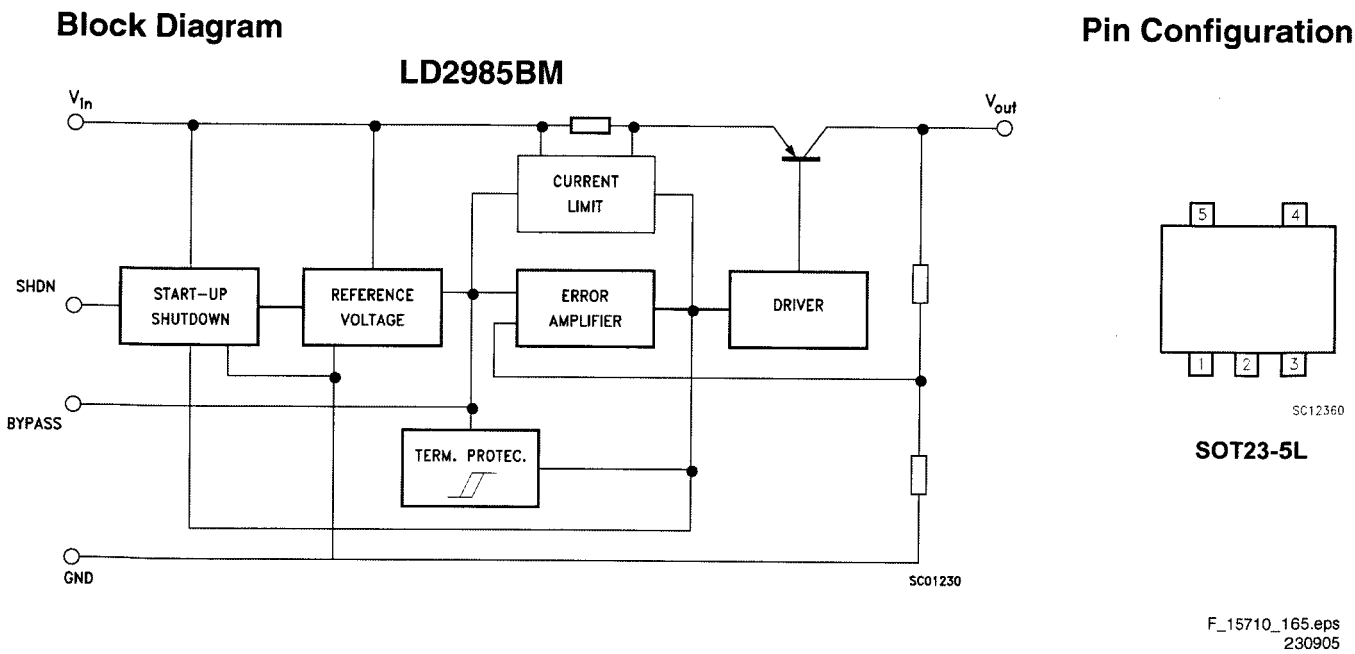

F_15710_165.eps
230905

Figure 9-46 Internal block diagram and pin configuration

9.17.11 Diagram B9A, LD1117DT (IC7G01)

Block Diagram

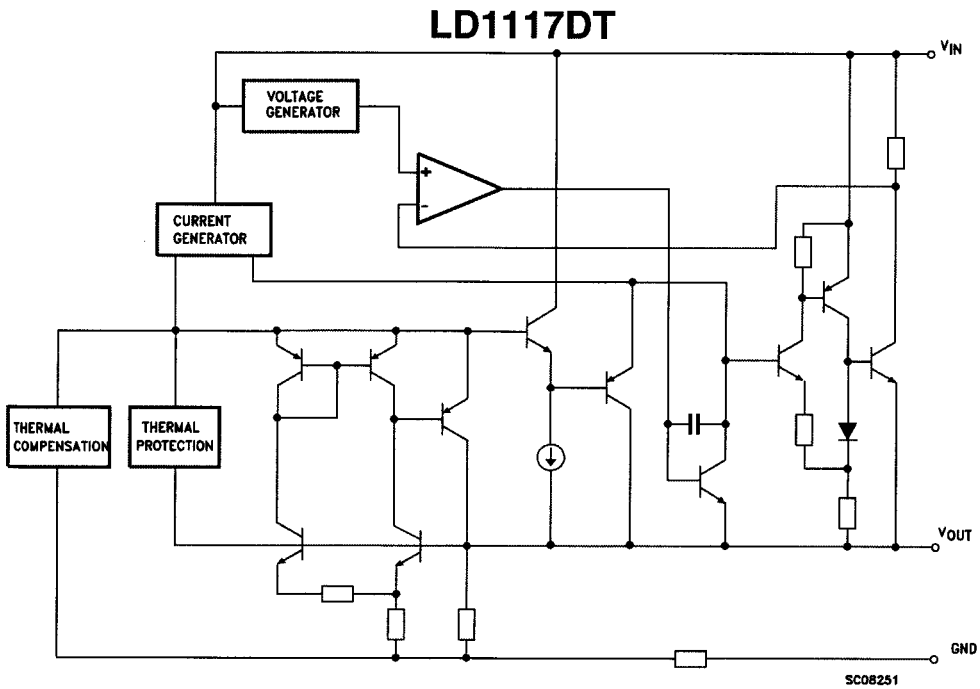

Pin Configuration

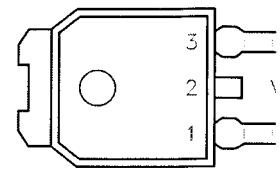

DPAK

F_15710_

Figure 9-47 Internal block diagram and pin configuration

9.17.12 Diagram B11B & B11C, TDA9975EL (IC 7B11)

Block Diagram

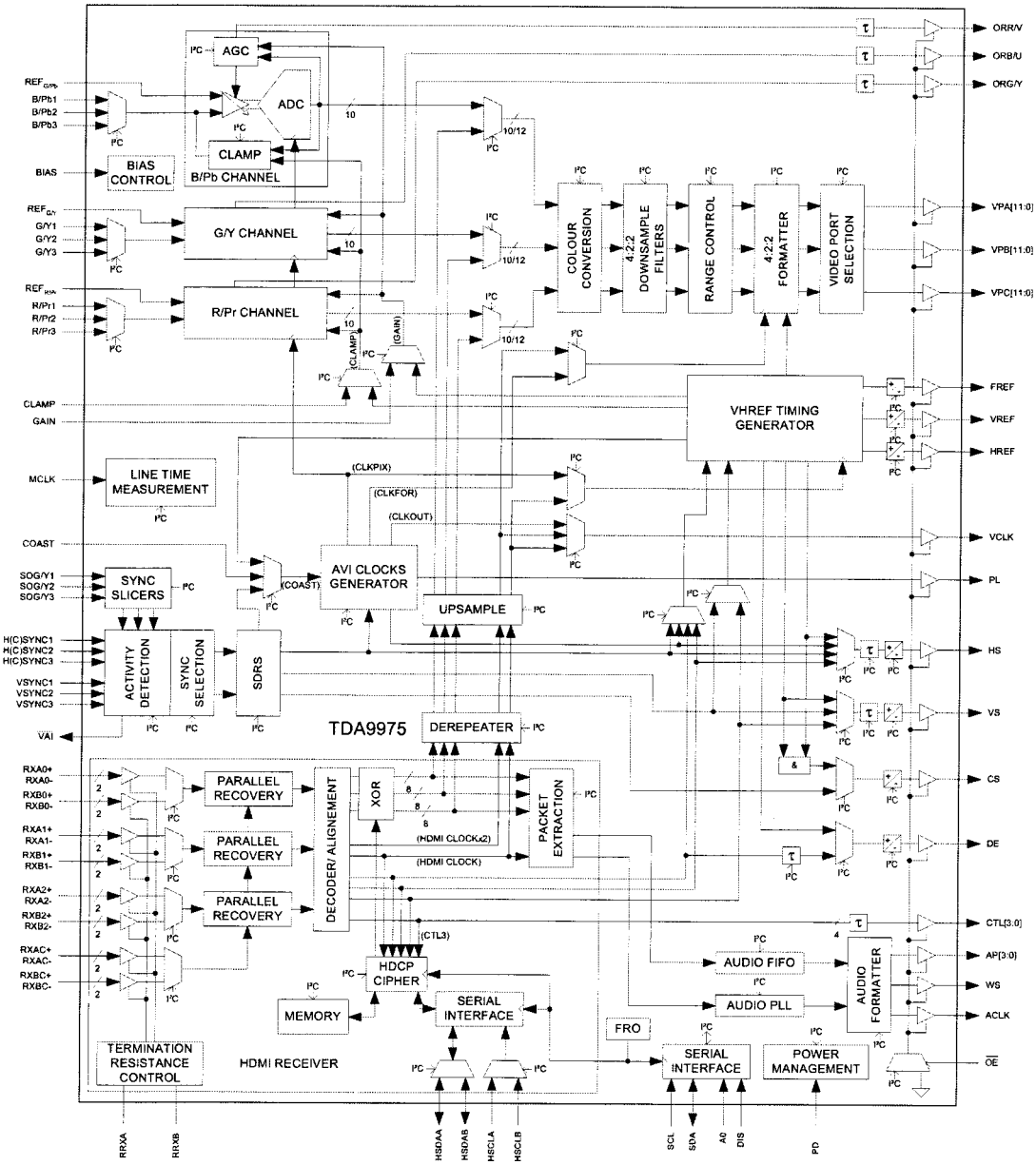

Pin Configuration

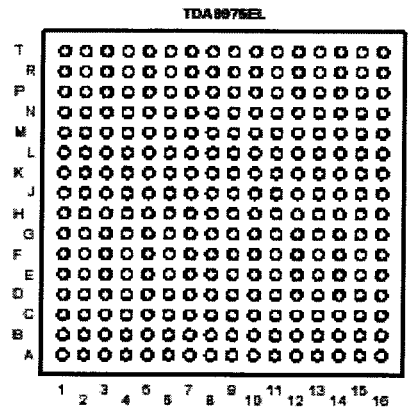

F_15400_135.eps
240505

Figure 9-48 Internal block diagram and pin configuration

9.17.13 Diagram B13A, ISP1561BM (IC 7N00)

Block Diagram

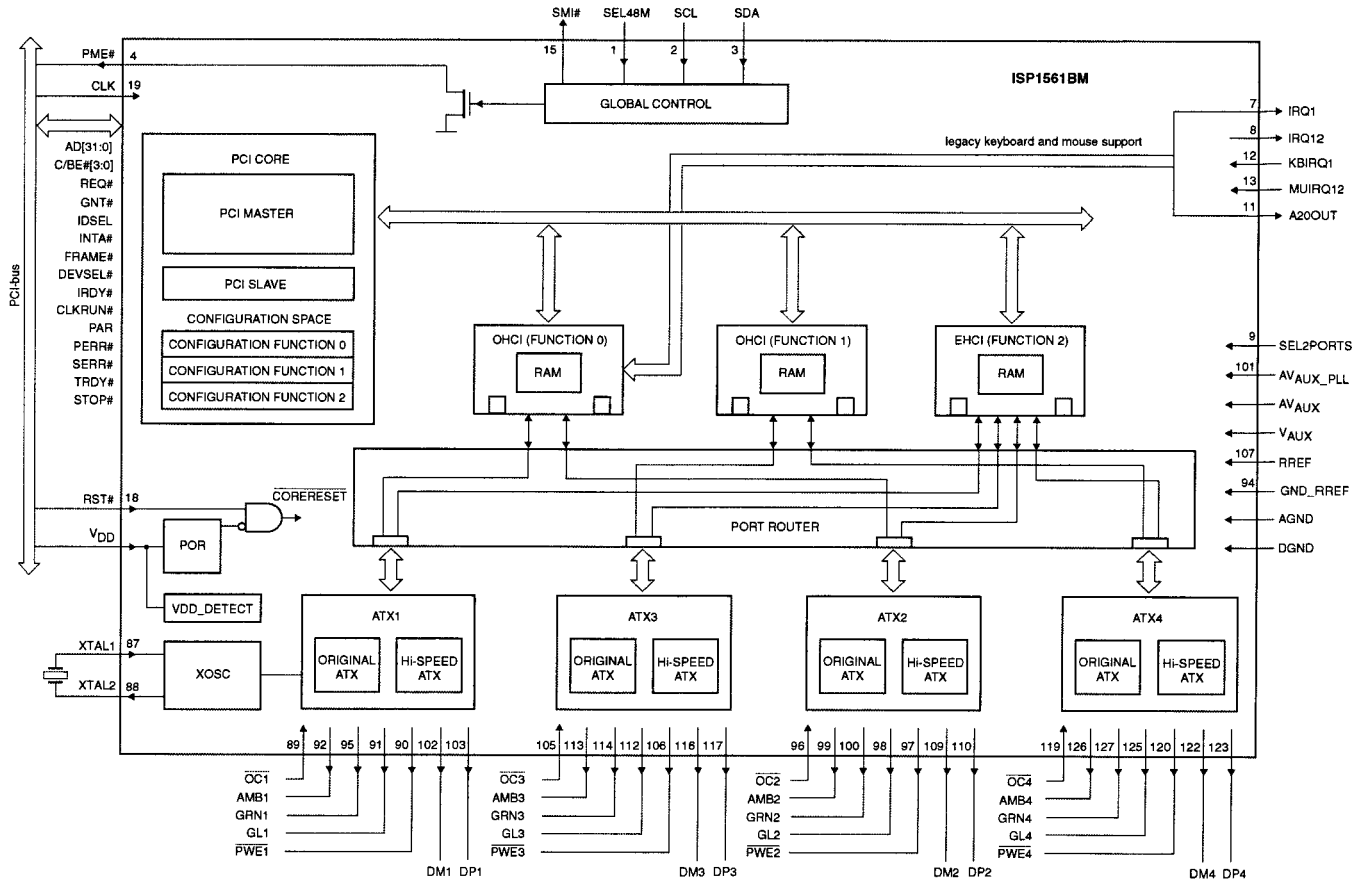

Pin Configuration

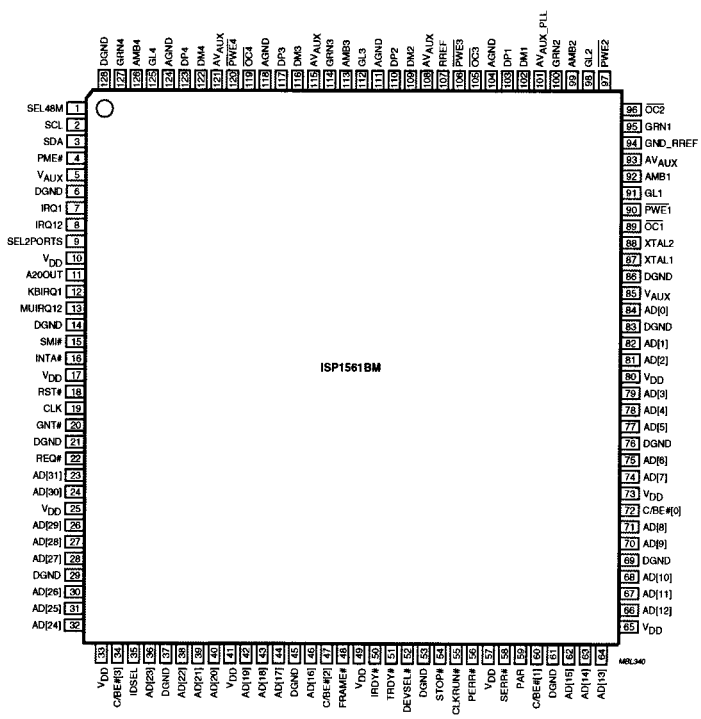

F_15400_136.eps
240505

Figure 9-49 Internal block diagram and pin configuration

9.17.14 Diagram B14B, PCA9554PW (IC 7I55)

BLOCK DIAGRAM

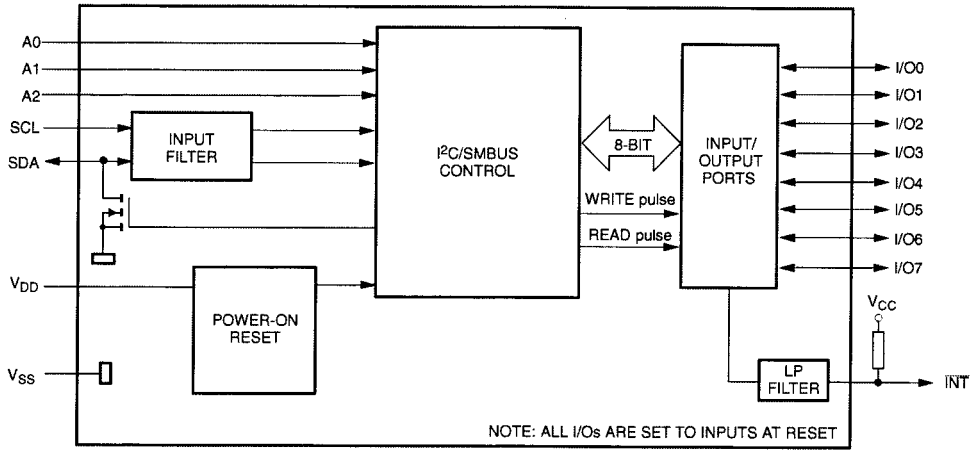

PIN CONFIGURATION

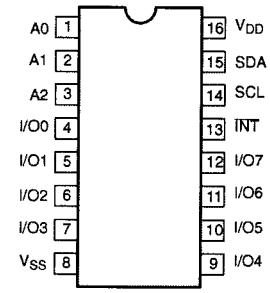

E_14700_092.eps
021104

Figure 9-50 Internal block diagram and pin configuration

9.17.15 Diagram B15, DP83816AVNG (7O00)

Block Diagram

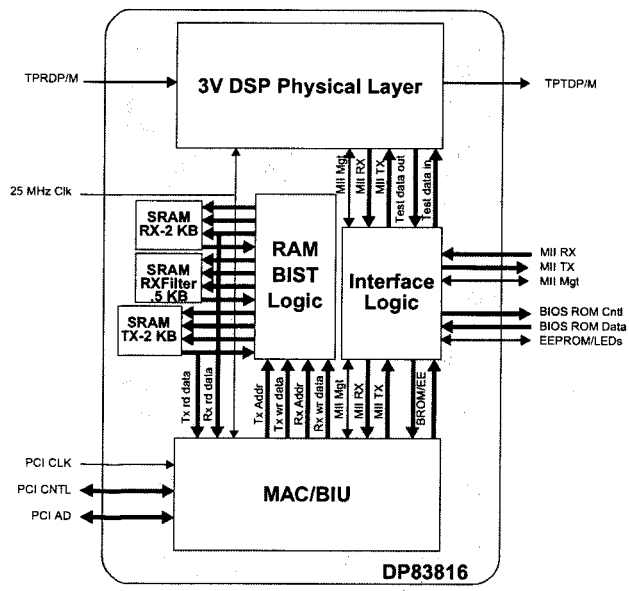

Pin Configuration

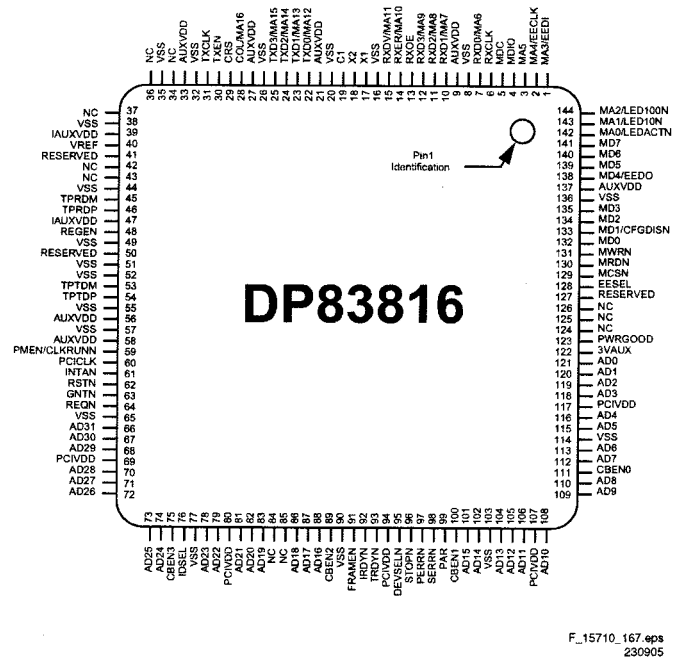

F_15710_167.eps
230905

Figure 9-51 Internal block diagram and pin configuration

9.17.16 Diagram SA3, TDA7490LG (7700)

Block Diagram

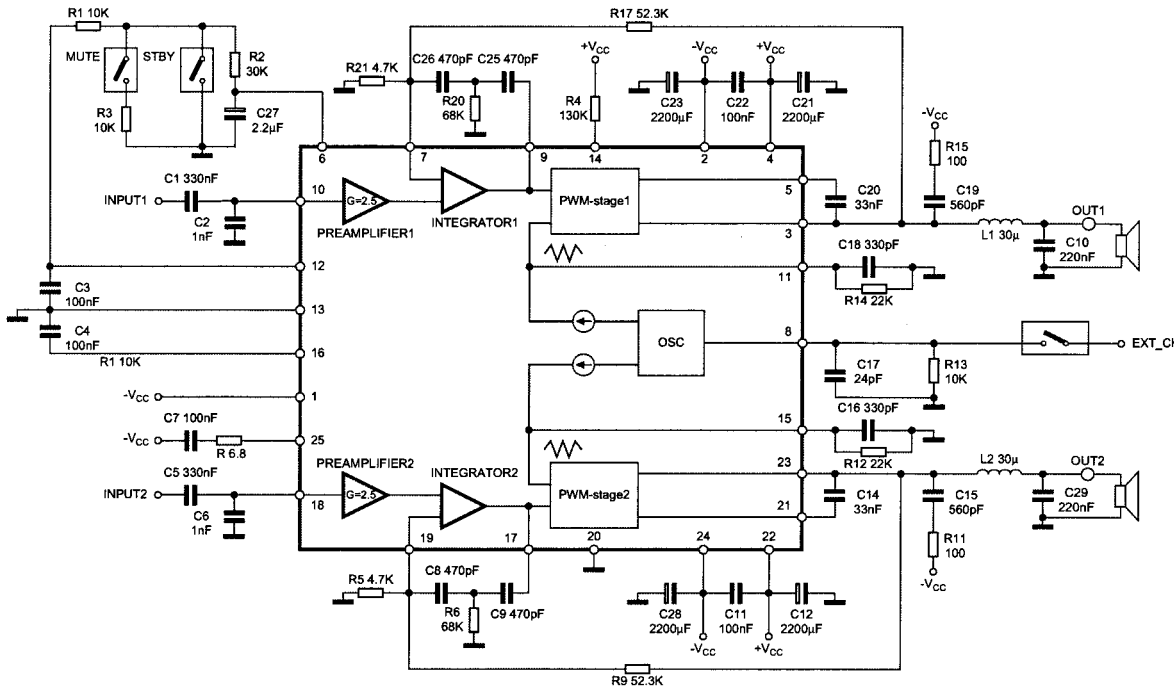

Pin Configuration (Top View)

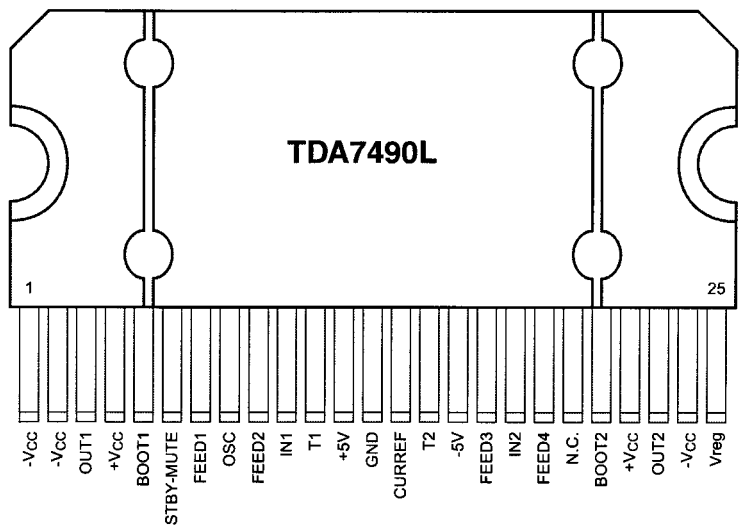

F_15710_168.eps
230905

Figure 9-52 Internal block diagram and pin configuration

9.17.17 Diagram SA3, TDA7482 (7702)

Block Diagram

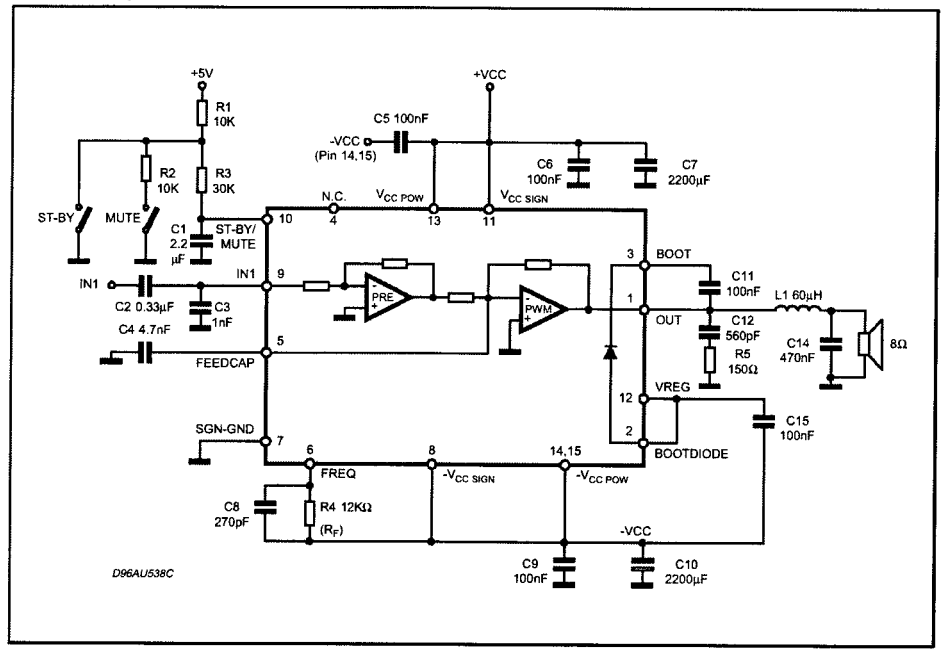

Pin Configuration (Top View)

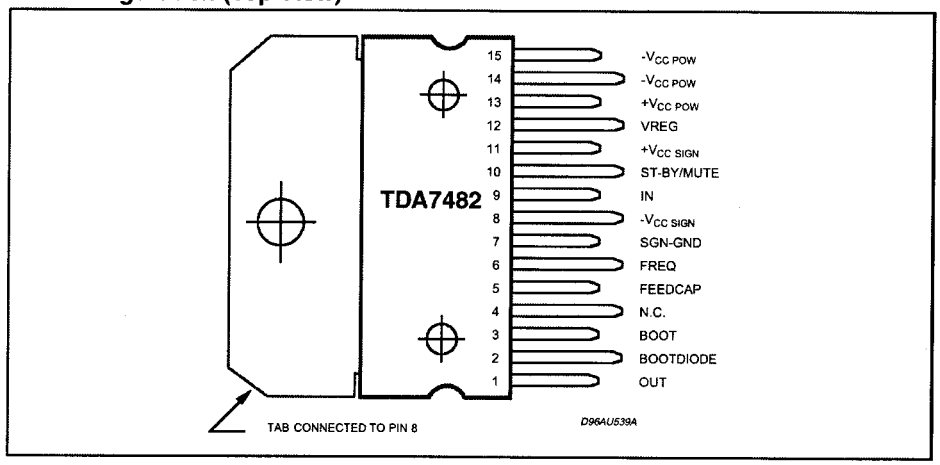

F_15710_169.eps
230905

Figure 9-53 Internal block diagram and pin configuration

10. Spare Parts List

Set Level

Various

0180	3104 328 35421	Cardreader assy
0212	3104 308 15031	Upright stand
0213	3104 308 15011	Glass stand 32"
0213	3104 308 15021	Glass stand 37/42"
0259	3104 308 16791	Smallware stand SB9830
0266	3104 308 16831	Adaptor stand SB9830
1004	8204 000 78791	LQ370D3LZ1 (Sharp)
1004	8204 000 78801	T315XW01V3 (AUO)
1004	9322 226 58682	LQ315T3LZ23 (Sharp)
1004	9322 228 99682	LC420WU1-SL01 (LPL)
1088	3104 328 39552	Ambil. inverter assy
1089	3104 328 39552	Ambil. inverter assy
1101	3104 328 43621	Serv SSB 32PF9830/10
1101	3104 328 43631	Serv SSB 37PF9830/10
1101	3104 328 43641	Serv SSB 42PF9830/10
1111	3104 328 35412	LED Panel shield. assy
1112	3104 328 32471	LED assy
1114	3104 328 41701	Top Control assy
1116	3104 328 30791	Side I/O assy
1175	2722 171 00291	Ambi light 420R-32" assy
1175	2722 171 00293	Ambi light 420R-37" assy
1175	2722 171 00297	Ambi light 500R-42" assy
1176	2722 171 00294	Ambi light 420L-32" assy
1176	2722 171 00295	Ambi light 420L-37" assy
1176	2722 171 00296	Ambi light 500L-42" assy
8250	3104 311 11081	Cable 31p/300/51p
8250	8204 000 78381	Cable 31p/280/30p
8302	3104 311 08931	Cable 7p/1000/7p
8303	3104 311 08261	Cable 4p/820/4p
8304	3104 311 08291	Cable 4p/680/4p
8305	3104 311 08401	Cable 3p/280/3p
8305	3104 311 08411	Cable 3p/340/3p
8306	3104 311 08341	Cable 2P3/280/2p3
8306	3104 311 08351	Cable 2p3/340/2p3
8307	3104 311 04321	Cable 9p/450/9p
8308	3104 311 10301	Cable 4p/1000/4p
8309	3104 311 08321	Cable 3p/680/3p
8310	3104 311 08471	Cable 4p/680/4p
8314	3104 311 07391	Cable 10p/220/10p
8314	3104 311 07441	Cable 10p/680/10p
8314	3104 311 08531	Cable 10p/820/10p
8315	3104 311 07441	Cable 10p/680/10p
8315	3104 311 08531	Cable 10p/820/10p
8315	3104 311 10891	Cable 10p/1K1/10p
8316	3104 311 07981	Cable 12p/180/12p
8317	3104 311 08201	Cable 12p/1300/12p
8318	3104 311 06841	Cable 6p/820/6p
8318	3104 311 07421	Cable 6p/680/6p
8318	3104 311 10901	Cable 6p/1K1/6p
8320	3104 311 08331	Cable 3p/820/3p
8348	3104 311 10171	Cable 3p/1000/3p
8349	3104 311 10811	Cable 4p/680/4p
8355	3104 311 07871	Cable 7p/180/7p
8700	3104 311 08251	Wire ring/180/POSI 4.8
8735	3104 311 07491	Cable 2p3/480/2p
8736	3104 311 07551	Cable 2p3/1600/2p

~

5212	3104 130 02901	NXT Monolith spk. 32"
5212	3104 130 02931	NXT Monolith spk. 37"
5212	3104 130 02961	NXT Monolith spk. 42"
5215	2441 257 10001	Loudspeaker 6Ω 15W

LCD Supply Panel 32" [A]

Various

1007▲	4822 071 55002	Fuse T5A 250V
1304	2422 025 10647	Connector 4p m
1305	4822 267 10735	Connector 3p
1306▲	2422 025 16374	Connector 2p m
1307	2422 025 10647	Connector 4p m
1308▲	4822 265 20723	Connector 2p m
1309	2422 025 11143	Connector 3p m
1400▲	4822 253 50145	Fuse 3.15A T
1402	4822 252 60151	Surge protect
1410	4822 265 11253	Fuse holder
1411	4822 265 11253	Fuse holder
1450▲	2422 132 07411	Relay 1p 5V 5A
1M02	2422 025 11244	Connector 7p m

⊣⊢

2000▲	2252 811 95022	1.5nF 20% 250V
2002	4822 124 11767	470µF 20% 25V
2003	4822 124 80061	1000µF 20% 25V
2007	4822 126 14583	470nF 10% 16V 0805
2008	4822 126 14583	470nF 10% 16V 0805
2009	2238 867 18101	100pF 1% 50V 0603
2010	4822 124 40207	100µF 20% 25V
2012▲	4822 126 14138	680pF 10% 2kV
2013▲	4822 126 14138	680pF 10% 2kV
2014▲	4822 126 13451	2.2nF 10% 2kV
2015	5322 126 11583	10nF 10% 50V 0603
2016	2238 586 59812	100nF 20% 50V 0603
2019	5322 126 11583	10nF 10% 50V 0603
2020	4822 124 12285	2200µF 20% 16V
2021	4822 124 12285	2200µF 20% 16V
2022	2020 021 00039	1800µF 20% 35V
2023	4822 126 14583	470nF 10% 16V 0805
2024	2020 552 96326	220nF 10% 16V
2025	2020 552 96683	220nF 10% 50V
2026	4822 126 14238	2.2nF 50V 0603
2028	5322 126 11578	1nF 10% 50V 0603
2029	5322 126 11578	1nF 10% 50V 0603
2031	5322 126 11583	10nF 10% 50V 0603
2033	2020 552 96683	220nF 10% 50V
2034	2238 867 18101	100pF 1% 50V 0603
2035	2238 867 18101	100pF 1% 50V 0603
2038	2020 021 00039	1800µF 20% 35V
2039	4822 126 14583	470nF 10% 16V 0805
2040	4822 126 14249	560pF 10% 50V 0603
2041	2020 552 96683	220nF 10% 50V
2042	2020 552 96683	220nF 10% 50V
2043	2020 552 96683	220nF 10% 50V
2044	5322 126 11578	1nF 10% 50V 0603
2045	5322 126 11578	1nF 10% 50V 0603
2046	3198 017 34730	47nF 16V 0603
2047	5322 126 11583	10nF 10% 50V 0603
2048	5322 126 11578	1nF 10% 50V 0603
2050	5322 126 11578	1nF 10% 50V 0603
2051	2020 552 96683	220nF 10% 50V
2052	2020 552 96683	220nF 10% 50V
2053	2020 552 96683	220nF 10% 50V
2060	4822 126 14238	2.2nF 50V 0603
2061	4822 126 14238	2.2nF 50V 0603
2062	4822 126 14238	2.2nF 50V 0603
2063	4822 126 13881	470pF 5% 50V
2064	4822 126 13881	470pF 5% 50V
2065	4822 126 14238	2.2nF 50V 0603
2071	5322 126 11578	1nF 10% 50V 0603
2072	5322 126 11578	1nF 10% 50V 0603
2077	4822 126 14238	2.2nF 50V 0603
2290	5322 126 11583	10nF 10% 50V 0603
2291	4822 126 13881	470pF 5% 50V
2292	4822 124 12417	2200µF 20% 25V
2293	4822 126 13881	470pF 5% 50V
2294	4822 124 12417	2200µF 20% 25V
2400▲	2222 338 22474	470nF 20% 275V
2407▲	2252 811 95017	470pF 10% 250V
2816▲	2020 024 00001	330µF 20% 400V
2816▲	2020 024 90749	330µF 20% 400V

-WW-

3000▲	4822 052 10478	4.7Ω 5% 0.33W
3001	4822 051 30101	100Ω 5% 0.062W
3002	4822 117 12925	47kΩ 1% 0.063W 0603
3003	4822 117 13632	100kΩ 1% 0603 0.62W
3004	4822 051 30273	27kΩ 5% 0.062W
3005	4822 051 30333	33kΩ 5% 0.062W
3006	4822 051 30103	10kΩ 5% 0.062W
3007	4822 051 30103	10kΩ 5% 0.062W
3008	4822 051 30331	330Ω 5% 0.062W
3009	4822 051 30332	3.3Ω 5% 0.062W
3010	4822 051 30471	47Ω 5% 0.062W
3011	4822 051 30471	47Ω 5% 0.062W
3012	4822 051 30153	15kΩ 5% 0.062W
3013	4822 051 30103	10kΩ 5% 0.062W
3014▲	4822 052 10101	100Ω 5% 0.33W
3015▲	4822 052 10479	47Ω 5% 0.33W
3016	4822 051 30332	3.3Ω 5% 0.062W
3017▲	4822 052 10101	100Ω 5% 0.33W
3018▲	4822 052 10479	47Ω 5% 0.33W
3019	4822 051 30332	3.3Ω 5% 0.062W
3020	4822 051 30332	3.3Ω 5% 0.062W
3021	4822 117 12971	15Ω 5% 0603 0.62W
3022	4822 051 30681	680Ω 5% 0.062W
3023	4822 051 30153	15kΩ 5% 0.062W

3025	3198 021 31820	1.8kΩ 5% 0.062W 0603
3026	2120 368 90118	Potm. lin. 470Ω hor.
3027	4822 117 13632	100kΩ 1% 0603 0.62W
3028	4822 051 30332	3.3Ω 5% 0.062W
3029	4822 051 30332	3.3Ω 5% 0.062W
3030	4822 051 30183	18kΩ 5% 0.062W
3031	4822 051 30103	10kΩ 5% 0.062W
3032	4822 051 30103	10kΩ 5% 0.062W
3032	4822 051 30223	22kΩ 5% 0.062W
3033▲	4822 052 11108	1Ω 5% 0.5W
3034	4822 051 30102	1kΩ 5% 0.062W
3035	4822 051 30332	3.3Ω 5% 0.062W
3037	4822 051 30153	15kΩ 5% 0.062W
3040	3198 021 38220	8.2kΩ 5% 0.062W 0603
3041	4822 051 30333	33kΩ 5% 0.062W
3043	4822 051 30109	10Ω 5% 0.062W
3045	4822 117 12971	15Ω 5% 0603 0.62W
3046	4822 117 12971	15Ω 5% 0603 0.62W
3047	4822 051 30479	47Ω 5% 0.062W
3048	4822 051 30272	2.7kΩ 5% 0.062W
3050	4822 050 28204	820kΩ 1% 0.6W
3052	2322 704 67502	7.5kΩ 1% 0.5W
3053	4822 050 26804	680kΩ 1% 0.6W
3055	4822 051 30221	220Ω 5% 0.062W
3056	4822 117 12968	820Ω 5% 0.62W
3057	4822 051 30221	220Ω 5% 0.062W
3058	4822 053 20565	5.6MΩ 5% 0.25W
3061	4822 051 30683	68kΩ 5% 0.062W
3064	4822 051 30103	10kΩ 5% 0.062W
3065	4822 117 13632	100kΩ 1% 0603 0.62W
3066	4822 051 30103	10kΩ 5% 0.062W
3067	4822 051 30101	100Ω 5% 0.062W
3068	4822 051 30222	2.2kΩ 5% 0.062W
3070	4822 051 30102	1kΩ 5% 0.062W
3071	4822 051 30103	10kΩ 5% 0.062W
3075	4822 051 30102	1kΩ 5% 0.062W
3089	4822 051 30103	10kΩ 5% 0.062W
3100	4822 051 30109	10Ω 5% 0.062W
3292	4822 051 30561	560Ω 5% 0.062W
3400▲	2122 550 00158	VDR 1mA 612V
3401▲	4822 053 21475	4.7MΩ 5% 0.5W
3402▲	4822 053 21475	4.7MΩ 5% 0.5W
3403▲	4822 053 21475	4.7MΩ 5% 0.5W
3404	4822 116 83872	220Ω 5% 0.5W
3999	4822 051 30682	6.8Ω 5% 0.062W

5001▲	2422 531 02444	Transf. S13932-04Y
5002▲	3104 308 21231	Transf. 2652.0001A
5005	4822 526 10704	Bead 50 Ω at 100MHz
5007	4822 526 10704	Bead 50 Ω at 100MHz
5008	4822 526 10704	Bead 50 Ω at 100MHz
5009	4822 157 11411	Bead 80Ω at 100MHz
5010	4822 157 11411	Bead 80Ω at 100MHz
5013	4822 526 10704	Bead 50 Ω at 100MHz
5015	4822 157 11411	Bead 80Ω at 100MHz
5016	4822 157 11411	Bead 80Ω at 100MHz
5017	4822 526 10704	Bead 50 Ω at 100MHz
5025	4822 526 10704	Bead 50 Ω at 100MHz
5026	4822 526 10704	Bead 50 Ω at 100MHz
5027	4822 526 10704	Bead 50 Ω at 100MHz
5028	4822 526 10704	Bead 50 Ω at 100MHz
5040	4822 157 11411	Bead 80Ω at 100MHz
5291	2422 536 00776	33µH 10%
5292	2422 536 00776	33µH 10%
5293	2422 536 00776	33µH 10%
5403▲	3104 308 21201	Line filter DTH40383H65

6002	4822 130 11397	BAS316
6003	4822 130 11397	BAS316
6004	4822 130 80622	BAT54
6005	4822 130 80622	BAT54
6006	4822 130 11397	BAS316
6007	4822 130 11397	BAS316
6008	4822 130 11397	BAS316
6009	4822 130 11152	UDZ18B
6010	4822 130 11397	BAS316
6011	4822 130 11397	BAS316
6012	9322 208 80685	BZG05C15
6013	9322 208 80685	BZG05C15
6014	9340 548 67115	PDZ22B
6015	4822 130 11397	BAS316
6017	4822 130 11397	BAS316
6020	4822 130 11397	BAS316
6021	9322 206 26687	STPS20H100CT
6022	4822 130 11148	UDZ4.7B
6023	4822 130 11397	BAS316
6025	9322 206 26687	STPS20H100CT
6027	4822 130 11397	BAS316
6028	4822 130 11397	BAS316
6044	9322 207 11687	STPS20L45CT
6045	9322 207 11687	STPS20L45CT
6051	4822 130 11397	BAS316
6077	9322 202 55685	BYG22D
6078	9322 202 55685	BYG22D
6079	9322 202 55685	BYG22D
6080	9322 202 55685	BYG22D
6081	9340 548 67115	PDZ22B
6291	4822 130 11572	STPS8H100F
6293	4822 130 11572	STPS8H100F
6460	4822 130 11397	BAS316
6461	4822 130 11397	BAS316
6506▲	4822 130 83147	DF06M
6807▲	9322 199 74682	GBJ6J-B15

7001	9322 108 21682	MC34067P
7002▲	9322 149 04682	TCET1102
7004	3198 010 42310	BC847BW
7005	9322 192 18687	STP15NK50ZFP
7005	9322 205 26687	FQPF18N50V2
7006	9322 192 18687	STP15NK50ZFP
7006	9322 205 26687	FQPF18N50V2
7007	3198 010 42320	BC857BW
7008	3198 010 42320	BC857BW
7009	3198 010 42320	BC857BW
7010	9322 192 16685	TS2431AI
7017	3198 010 42320	BC857BW
7018	3198 010 42310	BC847BW
7030	3198 010 42310	BC847BW

LCD Supply Panel 37" [A]

Various

1007▲	4822 071 55002	Fuse T5A 250V
1302	4822 252 60151	Surge protect
1303	4822 252 60151	Surge protect
1305	4822 267 10735	Connector 3p
1306	2422 025 16374	Connector 2p m
1308	4822 265 20723	Connector 2p
1314	4822 265 11253	Fuse holder
1315	4822 265 11253	Fuse holder
1350▲	2422 132 07411	Relay 1p 5V 5A

2002	2020 012 00006	680µF 20% 25V
2003	4822 124 80061	1000µF 20% 25V
2006	5322 126 11578	1nF 10% 50V 0603
2007	2020 552 96684	470nF 10% 25V 0805
2008	4822 126 14583	470nF 10% 16V 0805
2009	4822 126 13881	470pF 5% 50V
2010	4822 124 40207	100µF 20% 25V
2012	4822 126 13862	1.5nF 10% 2kV
2013	4822 126 13862	1.5nF 10% 2kV
2014	4822 126 13451	2.2nF 10% 2kV
2015	5322 126 11583	10nF 10% 50V 0603
2016	2238 586 59812	100nF 20% 50V 0603
2018	4822 124 12417	2200µF 20% 25V
2019	5322 126 11583	10nF 10% 50V 0603
2020	2020 021 00039	1800µF 20% 35V
2021	4822 126 13881	470pF 5% 50V
2022	2020 021 00039	1800µF 20% 35V
2023	2020 552 96684	470nF 10% 25V 0805
2024	2238 586 59812	100nF 20% 50V 0603
2025	2022 552 05679	1µF 10% 16V 0805
2026	4822 126 14238	2.2nF 50V 0603
2028	5322 126 11578	1nF 10% 50V 0603
2029	5322 126 11578	1nF 10% 50V 0603
2031	5322 126 11583	10nF 10% 50V 0603
2033	2022 552 05679	1µF 10% 16V 0805
2034	4822 124 12417	2200µF 20% 25V
2035	5322 126 11578	1nF 10% 50V 0603
2036	5322 126 11578	1nF 10% 50V 0603
2037	4822 126 14238	2.2nF 50V 0603
2038	2020 021 00039	1800µF 20% 35V
2039	5322 126 11583	10nF 10% 50V 0603
2040	4822 126 14249	560pF 10% 50V 0603
2041	2020 021 00039	1800µF 20% 35V
2042	5322 126 11578	1nF 10% 50V 0603
2043	2020 021 00039	1800µF 20% 35V
2044	5322 126 11578	1nF 10% 50V 0603
2045	5322 126 11578	1nF 10% 50V 0603
2046	3198 017 34730	47nF 16V 0603
2047	5322 126 11583	10nF 10% 50V 0603
2048	5322 126 11578	1nF 10% 50V 0603
2049	5322 126 11578	1nF 10% 50V 0603
2050	5322 126 11578	1nF 10% 50V 0603

2051	5322 126 11583	10nF 10% 50V 0603
2052	4822 126 14238	2.2nF 50V 0603
2053	4822 126 13881	470pF 5% 50V
2054	4822 126 13881	470pF 5% 50V
2055	4822 126 14238	2.2nF 50V 0603
2056	4822 126 14238	2.2nF 50V 0603
2057	4822 126 14238	2.2nF 50V 0603
2058	2238 867 18101	100pF 1% 50V 0603
2059▲	2222 375 24153	15nF 5% 1kV
2060▲	2222 375 24153	15nF 5% 1kV
2061	2238 867 18101	100pF 1% 50V 0603
2062	2238 867 18101	100pF 1% 50V 0603
2063	2238 586 59812	100nF 20% 50V 0603
2300▲	2222 339 22474	470µF 20% 275V
2301▲	2222 339 22474	470µF 20% 275V
2307▲	2252 811 95065	220pF 10% 250V
2316▲	2020 024 00001	330µF 20% 400V
2318▲	2252 811 95065	220pF 10% 250V
2319	2222 338 22105	1µF 20% 275V
2320	2020 024 00001	330µF 20% 400V

3000▲	4822 052 10478	4.7Ω 5% 0.33W
3001	4822 051 30101	100Ω 5% 0.062W
3002	4822 051 30222	2.2kΩ 5% 0.062W
3003	4822 051 30472	4.7Ω 5% 0.062W
3004	4822 051 30273	27kΩ 5% 0.062W
3005	4822 051 30333	33kΩ 5% 0.062W
3006	4822 051 30103	10kΩ 5% 0.062W
3007	4822 051 30103	10kΩ 5% 0.062W
3008	4822 051 30331	330Ω 5% 0.062W
3009	4822 051 30332	3.3Ω 5% 0.062W
3010	4822 051 30471	47Ω 5% 0.062W
3011	4822 051 30471	47Ω 5% 0.062W
3012	4822 051 30223	22kΩ 5% 0.062W
3013	4822 051 30103	10kΩ 5% 0.062W
3014▲	4822 052 10101	100Ω 5% 0.33W
3015▲	4822 052 10479	47Ω 5% 0.33W
3016	4822 051 30332	3.3Ω 5% 0.062W
3017▲	4822 052 10101	100Ω 5% 0.33W
3018▲	4822 052 10479	47Ω 5% 0.33W
3019	4822 051 30332	3.3Ω 5% 0.062W
3020	4822 051 30332	3.3Ω 5% 0.062W
3021	4822 051 20229	22kΩ 5% 0.1W
3022	4822 051 30681	680Ω 5% 0.062W
3023	4822 051 30103	10kΩ 5% 0.062W
3025	4822 051 30152	1.5Ω 5% 0.062W
3026	2120 368 90118	Potm. lin. 470Ω hor.
3027	4822 117 13632	100kΩ 1% 0603 0.62W
3028	4822 051 30102	1kΩ 5% 0.062W
3029	4822 051 30332	3.3Ω 5% 0.062W
3030	4822 051 30183	18kΩ 5% 0.062W
3031	4822 051 30103	10kΩ 5% 0.062W
3032	4822 051 30223	22kΩ 5% 0.062W
3033	4822 051 30561	560Ω 5% 0.062W
3034	4822 051 30471	47Ω 5% 0.062W
3035	4822 051 30101	100Ω 5% 0.062W
3036	4822 051 30103	10kΩ 5% 0.062W
3037	4822 051 30153	15kΩ 5% 0.062W
3039	4822 051 30102	1kΩ 5% 0.062W
3040	3198 021 38220	8.2kΩ 5% 0.062W 0603
3041	4822 051 30333	33kΩ 5% 0.062W
3042	4822 051 30222	2.2kΩ 5% 0.062W
3043	4822 051 30109	10Ω 5% 0.062W
3044	4822 051 30103	10kΩ 5% 0.062W
3045	4822 051 20229	22kΩ 5% 0.1W
3046	4822 051 20229	22kΩ 5% 0.1W
3047	4822 051 30479	47Ω 5% 0.062W
3048	4822 051 30272	2.7kΩ 5% 0.062W
3049	4822 117 13632	100kΩ 1% 0603 0.62W
3051	4822 051 30103	10kΩ 5% 0.062W
3052	4822 051 30153	15kΩ 5% 0.062W
3054	4822 051 30683	68kΩ 5% 0.062W
3055	4822 051 30221	220Ω 5% 0.062W
3056	4822 051 30221	220Ω 5% 0.062W
3057	4822 051 30221	220Ω 5% 0.062W
3059	5322 117 13019	100kΩ 1% 0.063W 0603
3060	4822 051 30103	10kΩ 5% 0.062W
3061	4822 051 30332	3.3Ω 5% 0.062W
3062	4822 051 30332	3.3Ω 5% 0.062W
3063	4822 051 30103	10kΩ 5% 0.062W
3065	4822 051 30102	1kΩ 5% 0.062W
3071	4822 050 25602	5K60 1% 0.6W
3073	4822 050 25602	5K60 1% 0.6W
3076	4822 050 25602	5K60 1% 0.6W
3077	4822 050 25602	5K60 1% 0.6W
3078	4822 050 25602	5K60 1% 0.6W
3079	4822 050 25602	5K60 1% 0.6W
3081	4822 050 25602	5K60 1% 0.6W
3082	4822 050 25602	5K60 1% 0.6W
3083	4822 050 25602	5K60 1% 0.6W
3085	4822 050 25602	5K60 1% 0.6W
3086	4822 050 25602	5K60 1% 0.6W
3087	4822 050 25602	5K60 1% 0.6W
3089	4822 051 30103	10kΩ 5% 0.062W
3300▲	2122 550 00158	VDR 1mA 612V
3301▲	4822 053 21475	4.7MΩ 5% 0.5W
3302▲	4822 053 21475	4.7MΩ 5% 0.5W
3303▲	4822 053 21475	4.7MΩ 5% 0.5W
3304	4822 116 83872	220Ω 5% 0.5W
3305	4822 116 83872	220Ω 5% 0.5W
3306	4822 051 30102	1kΩ 5% 0.062W
3308	4822 053 11223	22kΩ 5% 2W
3318	4822 053 10471	470Ω 5% 1W
3999	4822 051 30102	1kΩ 5% 0.062W

5001▲	2422 531 02444	Transf. S13932-04Y
5002▲	3104 308 21211	Transf. BS51321-02 B
5005	4822 526 10704	Bead 50 Ω at 100MHz
5007	4822 526 10704	Bead 50 Ω at 100MHz
5008	4822 526 10704	Bead 50 Ω at 100MHz
5009	4822 157 11411	Bead 80Ω at 100MHz
5010	4822 157 11411	Bead 80Ω at 100MHz
5011▲	3104 308 21211	Transf. BS51321-02 B
5012	4822 526 10704	Bead 50 Ω at 100MHz
5013	4822 526 10704	Bead 50 Ω at 100MHz
5015	4822 157 11411	Bead 80Ω at 100MHz
5016	4822 157 11411	Bead 80Ω at 100MHz
5017	4822 526 10704	Bead 50 Ω at 100MHz
5018	2422 535 94636	3.3µF 20%
5019	2422 536 00776	33µH 10%
5020	2422 536 00776	33µH 10%
5021	4822 157 11411	Bead 80Ω at 100MHz
5022	4822 157 11411	Bead 80Ω at 100MHz
5025	4822 157 11411	Bead 80Ω at 100MHz
5026	4822 157 11411	Bead 80Ω at 100MHz
5303▲	3104 308 21201	Line filter DTH40383H65

6002	4822 130 11397	BAS316
6003	4822 130 11397	BAS316
6004	4822 130 80622	BAT54
6005	4822 130 80622	BAT54
6006	4822 130 11397	BAS316
6007	4822 130 11397	BAS316
6008	4822 130 11397	BAS316
6010	4822 130 11397	BAS316
6011	4822 130 11397	BAS316
6012	9322 208 80685	BZG05C15
6013	9322 208 80685	BZG05C15
6014	9340 548 71115	PDZ33B
6015	4822 130 11397	BAS316
6017	4822 130 11397	BAS316
6018	4822 130 11152	UDZ18B
6019	9322 173 47687	STPS20L40CFP
6021	4822 130 11596	BYW29EX-200
6022	4822 130 11148	UDZ4.7B
6023	4822 130 11397	BAS316
6024	9322 202 55685	BYG22D
6025	9322 202 55685	BYG22D
6026	4822 130 11397	BAS316
6027	4822 130 11397	BAS316
6028	4822 130 11397	BAS316
6029	4822 130 11596	BYW29EX-200
6030	4822 130 11596	BYW29EX-200
6031	4822 130 11596	BYW29EX-200
6032	9322 202 55685	BYG22D
6033	9322 202 55685	BYG22D
6038	4822 130 11397	BAS316
6040	4822 130 11596	BYW29EX-200
6041	4822 130 11596	BYW29EX-200
6304	4822 130 11397	BAS316
6305	4822 130 11397	BAS316
6306	4822 130 83147	DF06M
6307	9322 199 74682	GBJ6J-B15
6314	9340 292 50135	BZG03-C200
6315	9340 292 50135	BZG03-C200
6316	9340 548 71115	PDZ33B
6318	4822 130 11397	BAS316
6360	4822 130 11397	BAS316
6361	4822 130 11397	BAS316

7001	9322 108 21682	MC34067P
7003	3198 010 42310	BC847BW
7004	3198 010 42310	BC847BW
7005	9322 192 18687	STP15NK50ZFP
7006	9322 192 18687	STP15NK50ZFP
7007	3198 010 42320	BC857BW
7008	3198 010 42320	BC857BW
7009	3198 010 42320	BC857BW
7010	9322 192 16685	TS2431AI
7011	3198 010 42320	BC857BW
7012	3198 010 42310	BC847BW
7307▲	9322 149 04682	TCET1102

LCD Supply 42" Panel [A]

Various

1303	2422 025 04475	Connector 4p m
1304	2422 025 10647	Connector 4p m
1305	4822 267 10735	Connector 3p
1306	2422 025 16374	Connector 2p m
1307	2422 025 10647	Connector 4p m
1308	4822 265 20723	Connector 2p
1309	2422 025 11143	Connector 3p m
1320	2422 025 11143	Connector 3p m
1400▲	4822 070 33152	Fuse 3.15A
1402	4822 252 60151	Surge protect
1405	4822 265 11253	Fuse holder
1410	4822 265 11253	Fuse holder
1420	3104 311 08391	Cable 3p/140/3p Wh
1450▲	2422 132 07411	Relay 1p 5V 5A
1B06	4822 267 10735	Connector 3p
1C05	4822 267 10735	Connector 3p
1D00▲	4822 070 33152	Fuse 3.15A
1D02	4822 252 60151	Surge protect
1D10	4822 265 11253	Fuse holder
1D50▲	2422 132 07411	Relay 1p 5V 5A
1M02	2422 025 11244	Connector 7p m
1U07▲	4822 071 55002	Fuse T5A 250V

2002	4822 124 11767	470µF 20% 25V
2003	4822 124 80061	1000µF 20% 25V
2007	2020 552 96684	470nF 10% 25V 0805
2008	4822 126 14583	470nF 10% 16V 0805
2009	2238 867 18101	100pF 1% 50V 0603
2010	4822 124 40207	100µF 20% 25V
2011	4822 121 70617	10nF 5% 1.6kV
2012	4822 126 13862	1.5nF 10% 2kV
2013	4822 126 13862	1.5nF 10% 2kV
2014	4822 126 13451	2.2nF 10% 2kV
2015	5322 126 11583	10nF 10% 50V 0603
2016	2238 586 59812	100nF 20% 50V 0603
2017	4822 121 70617	10nF 5% 1.6kV
2019	5322 126 11583	10nF 10% 50V 0603
2020	4822 124 12285	2200µF 20% 16V
2021	2238 867 18101	100pF 1% 50V 0603
2022	2020 021 00039	1800µF 20% 35V
2023	2020 552 96684	470nF 10% 25V 0805
2024	2020 552 96326	220nF 10% 16V
2025	4822 121 51319	1µF 10% 63V
2026	4822 126 14238	2.2nF 50V 0603
2028	5322 126 11578	1nF 10% 50V 0603
2029	5322 126 11578	1nF 10% 50V 0603
2031	5322 126 11583	10nF 10% 50V 0603
2032	4822 126 13193	4.7nF 10% 63V
2033	4822 121 51319	1µF 10% 63V
2034	2238 867 18101	100pF 1% 50V 0603
2035	5322 126 11578	1nF 10% 50V 0603
2038	2020 021 00039	1800µF 20% 35V
2039	5322 126 11583	10nF 10% 50V 0603
2040	4822 126 14249	560pF 10% 50V 0603
2044	5322 126 11578	1nF 10% 50V 0603
2045	5322 126 11578	1nF 10% 50V 0603
2046	3198 017 34730	47nF 16V 0603
2047	5322 126 11583	10nF 10% 50V 0603
2048	5322 126 11578	1nF 10% 50V 0603
2050	5322 126 11578	1nF 10% 50V 0603
2060	4822 126 14238	2.2nF 50V 0603
2061	4822 126 14238	2.2nF 50V 0603
2062	4822 126 14238	2.2nF 50V 0603
2063	4822 126 13881	470pF 5% 50V
2064	4822 126 13881	470pF 5% 50V
2065	4822 126 14238	2.2nF 50V 0603
2071	5322 126 11578	1nF 10% 50V 0603
2072	5322 126 11578	1nF 10% 50V 0603
2077	4822 126 14238	2.2nF 50V 0603
2290	5322 126 11583	10nF 10% 50V 0603
2400▲	2222 338 22474	470nF 20% 275V
2401▲	2222 338 22474	470nF 20% 275V
2405▲	2020 554 90167	220pF 10% 250V
2407▲	2020 554 90167	220pF 10% 250V
2816▲	2020 024 90749	330µF 20% 400V
2817▲	4822 121 70162	10nF 5% 400V
2B90	5322 126 11583	10nF 10% 50V 0603
2B91	4822 126 13881	470pF 5% 50V
2B92	4822 124 12417	2200µF 20% 25V

2B93	4822 126 13881	470pF 5% 50V
2B94	4822 124 12417	2200µF 20% 25V
2D00▲	2222 338 22474	470nF 20% 275V
2D01▲	2222 338 22474	470nF 20% 275V
2D05▲	2020 554 90167	220pF 10% 250V
2D07▲	2020 554 90167	220pF 10% 250V
2H16	2020 024 90749	330µF 20% 400V
2H17	4822 121 70162	10nF 5% 400V
2U02	4822 124 11767	470µF 20% 25V
2U03	4822 124 80061	1000µF 20% 25V
2U07	2020 552 96684	470nF 10% 25V 0805
2U08	4822 126 14583	470nF 10% 16V 0805
2U09	2238 867 18101	100pF 1% 50V 0603
2U10	4822 124 40207	100µF 20% 25V
2U11▲	4822 121 70617	10nF 5% 1.6kV
2U12▲	4822 126 13862	1.5nF 10% 2kV
2U13▲	4822 126 13862	1.5nF 10% 2kV
2U14▲	4822 126 13451	2.2nF 10% 2kV
2U15	5322 126 11583	10nF 10% 50V 0603
2U16	2238 586 59812	100nF 20% 50V 0603
2U17▲	4822 121 70617	10nF 5% 1.6kV
2U19	5322 126 11583	10nF 10% 50V 0603
2U21	2238 867 18101	100pF 1% 50V 0603
2U22	2020 021 00039	1800µF 20% 35V
2U23	2020 552 96684	470nF 10% 25V 0805
2U24	2020 552 96326	220nF 10% 16V
2U25	4822 121 51319	1µF 10% 63V
2U26	4822 126 14238	2.2nF 50V 0603
2U29	5322 126 11578	1nF 10% 50V 0603
2U32	4822 126 13193	4.7nF 10% 63V
2U33	4822 121 51319	1µF 10% 63V
2U34	2238 867 18101	100pF 1% 50V 0603
2U38	2020 021 00039	1800µF 20% 35V
2U39	5322 126 11583	10nF 10% 50V 0603
2U40	4822 126 14249	560pF 10% 50V 0603
2U45	5322 126 11578	1nF 10% 50V 0603
2U46	3198 017 34730	47nF 16V 0603
2U47	5322 126 11583	10nF 10% 50V 0603
2U48	5322 126 11578	1nF 10% 50V 0603
2U50	5322 126 11578	1nF 10% 50V 0603
2U60	4822 126 14238	2.2nF 50V 0603
2U61	4822 126 14238	2.2nF 50V 0603
2U62	4822 126 14238	2.2nF 50V 0603
2U63	4822 126 13881	470pF 5% 50V
2U64	4822 126 13881	470pF 5% 50V
2U65	4822 126 14238	2.2nF 50V 0603
2U71	5322 126 11578	1nF 10% 50V 0603
2U72	5322 126 11578	1nF 10% 50V 0603
2U77	4822 126 14238	2.2nF 50V 0603

-WW-

3000▲	4822 052 10478	4.7Ω 5% 0.33W
3001	4822 051 30101	100Ω 5% 0.062W
3002	4822 051 30103	10kΩ 5% 0.062W
3003	4822 117 13632	100kΩ 1% 0603 0.62W
3004	4822 051 30273	27kΩ 5% 0.062W
3005	4822 051 30333	33kΩ 5% 0.062W
3006	4822 051 30103	10kΩ 5% 0.062W
3007	4822 051 30103	10kΩ 5% 0.062W
3008	4822 051 30331	330Ω 5% 0.062W
3009	4822 051 30332	3.3Ω 5% 0.062W
3010	4822 051 30471	47Ω 5% 0.062W
3011	4822 051 30471	47Ω 5% 0.062W
3012	4822 051 30153	15kΩ 5% 0.062W
3013	4822 051 30103	10kΩ 5% 0.062W
3014▲	4822 052 10101	100Ω 5% 0.33W
3015▲	4822 052 10479	47Ω 5% 0.33W
3016	4822 051 30222	2.2kΩ 5% 0.062W
3017▲	4822 052 10101	100Ω 5% 0.33W
3018▲	4822 052 10479	47Ω 5% 0.33W
3019	4822 051 30222	2.2kΩ 5% 0.062W
3020	4822 051 30222	2.2kΩ 5% 0.062W
3021	3198 021 32290	22Ω 5% 0603
3022	4822 051 30681	680Ω 5% 0.062W
3023	4822 051 30153	15kΩ 5% 0.062W
3025	3198 021 31820	1.8kΩ 5% 0.062W 0603
3026	2120 368 90118	Potm. lin. 470Ω hor.
3027	4822 117 13632	100kΩ 1% 0603 0.62W
3028	4822 051 30102	1kΩ 5% 0.062W
3029	4822 051 30222	2.2kΩ 5% 0.062W
3030	4822 051 30183	18kΩ 5% 0.062W
3031	4822 051 30223	22kΩ 5% 0.062W
3032	4822 051 30103	10kΩ 5% 0.062W
3034	4822 051 30102	1kΩ 5% 0.062W
3037	4822 051 30153	15kΩ 5% 0.062W
3038	4822 051 30333	33kΩ 5% 0.062W
3040	3198 021 38220	8.2kΩ 5% 0.062W 0603
3041	4822 051 30333	33kΩ 5% 0.062W
3043	4822 051 30109	10Ω 5% 0.062W
3045	3198 021 32290	22Ω 5% 0603
3046	3198 021 32290	22Ω 5% 0603
3047	4822 051 30479	47Ω 5% 0.062W
3048	4822 051 30272	2.7kΩ 5% 0.062W
3050	4822 050 28204	820kΩ 1% 0.6W
3052	2322 704 67502	7.5kΩ 1% 0.5W
3053	4822 050 26804	680kΩ 1% 0.6W
3055	4822 051 30221	220Ω 5% 0.062W
3056	4822 051 30221	220Ω 5% 0.062W
3057	4822 051 30221	220Ω 5% 0.062W
3058	4822 053 20565	5.6MΩ 5% 0.25W
3061	4822 051 30683	68kΩ 5% 0.062W
3064	4822 051 30103	10kΩ 5% 0.062W
3065	4822 117 12925	47kΩ 1% 0.063W 0603
3066	4822 051 30103	10kΩ 5% 0.062W
3067	4822 051 30101	100Ω 5% 0.062W
3068	4822 051 30222	2.2kΩ 5% 0.062W
3070	4822 051 30102	1kΩ 5% 0.062W
3071	4822 051 30103	10kΩ 5% 0.062W
3075	4822 051 30102	1kΩ 5% 0.062W
3089	4822 051 30103	10kΩ 5% 0.062W
3292	4822 051 30561	560Ω 5% 0.062W
3400▲	2122 550 00158	VDR 1mA 612V
3401▲	4822 053 21475	4.7MΩ 5% 0.5W
3402▲	4822 053 21475	4.7MΩ 5% 0.5W
3403▲	4822 053 21475	4.7MΩ 5% 0.5W
3404	4822 116 83872	220Ω 5% 0.5W
3406▲	4822 052 10101	100Ω 5% 0.33W
3407▲	4822 052 10101	100Ω 5% 0.33W
3999	4822 051 30102	1kΩ 5% 0.062W
3B92	4822 051 30561	560Ω 5% 0.062W
3D00▲	2122 550 00158	VDR 1mA 612V
3D04	4822 116 83872	220Ω 5% 0.5W
3U00▲	4822 052 10478	4.7Ω 5% 0.33W
3U01	4822 051 30101	100Ω 5% 0.062W
3U02	4822 051 30103	10kΩ 5% 0.062W
3U03	4822 117 13632	100kΩ 1% 0603 0.62W
3U04	4822 051 30273	27kΩ 5% 0.062W
3U05	4822 051 30333	33kΩ 5% 0.062W
3U06	4822 051 30103	10kΩ 5% 0.062W
3U07	4822 051 30103	10kΩ 5% 0.062W
3U08	4822 051 30331	330Ω 5% 0.062W
3U09	4822 051 30332	3.3Ω 5% 0.062W
3U10	4822 051 30471	47Ω 5% 0.062W
3U11	4822 051 30471	47Ω 5% 0.062W
3U12	4822 051 30153	15kΩ 5% 0.062W
3U13	4822 051 30103	10kΩ 5% 0.062W
3U14▲	4822 052 10101	100Ω 5% 0.33W
3U15▲	4822 052 10479	47Ω 5% 0.33W
3U16	4822 051 30222	2.2kΩ 5% 0.062W
3U17▲	4822 052 10101	100Ω 5% 0.33W
3U18▲	4822 052 10479	47Ω 5% 0.33W
3U19	4822 051 30222	2.2kΩ 5% 0.062W
3U20	4822 051 30222	2.2kΩ 5% 0.062W
3U21	3198 021 32290	22Ω 5% 0603
3U22	4822 051 30331	330Ω 5% 0.062W
3U23	4822 051 30153	15kΩ 5% 0.062W
3U24	2322 704 61803	18kΩ 1% 0603
3U25	3198 021 31820	1.8kΩ 5% 0.062W 0603
3U26	2120 368 90118	Potm. lin. 470Ω hor.
3U27	4822 117 13632	100kΩ 1% 0603 0.62W
3U28	4822 051 30102	1kΩ 5% 0.062W
3U29	4822 051 30222	2.2kΩ 5% 0.062W
3U30	4822 051 30183	18kΩ 5% 0.062W
3U31	4822 051 30223	22kΩ 5% 0.062W
3U32	4822 051 30103	10kΩ 5% 0.062W
3U34	4822 051 30102	1kΩ 5% 0.062W
3U38	4822 051 30333	33kΩ 5% 0.062W
3U39	4822 051 30331	330Ω 5% 0.062W
3U40	3198 021 38220	8.2kΩ 5% 0.062W 0603
3U41	4822 051 30333	33kΩ 5% 0.062W
3U43	4822 051 30109	10Ω 5% 0.062W
3U45	3198 021 32290	22Ω 5% 0603
3U46	3198 021 32290	22Ω 5% 0603
3U47	4822 051 30479	47Ω 5% 0.062W
3U48	4822 051 30272	2.7kΩ 5% 0.062W
3U50	4822 050 28204	820kΩ 1% 0.6W
3U52	4822 051 30221	220Ω 5% 0.062W
3U53	4822 050 26804	680kΩ 1% 0.6W
3U55	4822 051 30221	220Ω 5% 0.062W
3U56	4822 051 30221	220Ω 5% 0.062W
3U57	4822 051 30221	220Ω 5% 0.062W
3U58	4822 053 20565	5.6MΩ 5% 0.25W
3U61	4822 051 30683	68kΩ 5% 0.062W
3U64	4822 051 30103	10kΩ 5% 0.062W
3U65	4822 117 12925	47kΩ 1% 0.063W 0603
3U66	4822 051 30103	10kΩ 5% 0.062W
3U67	4822 051 30101	100Ω 5% 0.062W
3U68	4822 051 30222	2.2kΩ 5% 0.062W
3U70	4822 051 30102	1kΩ 5% 0.062W
3U71	4822 051 30103	10kΩ 5% 0.062W
3U75	4822 051 30102	1kΩ 5% 0.062W
3U89	4822 051 30103	10kΩ 5% 0.062W

-~~-

5001	2422 531 02444	Transf. S13932-04Y
5002▲	3104 308 21111	Transf. BS51312-01
5004	4822 526 10704	Bead 50 Ω at 100MHz
5005	4822 157 11411	Bead 80Ω at 100MHz
5007	4822 526 10704	Bead 50 Ω at 100MHz
5008	4822 157 11411	Bead 80Ω at 100MHz
5009	4822 157 11411	Bead 80Ω at 100MHz
5010	4822 157 11411	Bead 80Ω at 100MHz
5013	4822 157 11411	Bead 80Ω at 100MHz
5015	4822 157 11411	Bead 80Ω at 100MHz
5016	4822 157 11411	Bead 80Ω at 100MHz
5017	4822 526 10704	Bead 50 Ω at 100MHz
5025	4822 157 11411	Bead 80Ω at 100MHz
5026	4822 157 11411	Bead 80Ω at 100MHz
5027	4822 157 11411	Bead 80Ω at 100MHz
5028	4822 157 11411	Bead 80Ω at 100MHz
5040	4822 157 11411	Bead 80Ω at 100MHz
5041	4822 526 10704	Bead 50 Ω at 100MHz
5400▲	2422 549 43286	Filt. DMF2835H*B
5403▲	3104 308 21201	Line filter DTH40383H65
5B91	2422 536 00776	33µH 10%
5B92	2422 536 00776	33µH 10%
5B93	2422 536 00776	33µH 10%
5D00▲	2422 549 43286	Filt. DMF2835H*B
5D03▲	3104 308 21201	Line filter DTH40383H65
5U01▲	2422 531 02444	Transf. S13932-04Y
5U02▲	3104 308 21111	Transf. BS51312-01
5U04	4822 526 10704	Bead 50 Ω at 100MHz
5U05	4822 157 11411	Bead 80Ω at 100MHz
5U07	4822 526 10704	Bead 50 Ω at 100MHz
5U08	4822 157 11411	Bead 80Ω at 100MHz
5U09	4822 157 11411	Bead 80Ω at 100MHz
5U10	4822 157 11411	Bead 80Ω at 100MHz
5U13	4822 157 11411	Bead 80Ω at 100MHz
5U15	4822 157 11411	Bead 80Ω at 100MHz
5U16	4822 157 11411	Bead 80Ω at 100MHz
5U17	4822 526 10704	Bead 50 Ω at 100MHz
5U25	4822 157 11411	Bead 80Ω at 100MHz
5U26	4822 157 11411	Bead 80Ω at 100MHz
5U40	4822 157 11411	Bead 80Ω at 100MHz
5U41	4822 526 10704	Bead 50 Ω at 100MHz

-▷|-

6001	4822 130 11397	BAS316
6002	4822 130 11397	BAS316
6003	4822 130 11397	BAS316
6004	4822 130 80622	BAT54
6005	4822 130 80622	BAT54
6006	4822 130 11397	BAS316
6007	4822 130 11397	BAS316
6008	4822 130 11397	BAS316
6009	4822 130 11152	UDZ18B
6010	4822 130 11397	BAS316
6011	4822 130 11397	BAS316
6012	9322 208 80685	BZG05C15
6013	9322 208 80685	BZG05C15
6014	4822 130 11596	BYW29EX-200
6015	9340 548 67115	PDZ22B
6016	4822 130 11397	BAS316
6017	4822 130 11397	BAS316
6020	4822 130 11397	BAS316
6021	9322 192 03687	STPS20H100CFP
6022	4822 130 11148	UDZ4.7B
6023	4822 130 11397	BAS316
6027	4822 130 11397	BAS316
6028	4822 130 11397	BAS316
6044	9322 207 11687	STPS20L45CT
6051	4822 130 11397	BAS316
6077	9322 202 55685	BYG22D
6078	5322 130 31938	BYV27-200
6079	9322 202 55685	BYG22D
6080	9322 202 55685	BYG22D
6081	9340 548 67115	PDZ22B
6156	9322 099 61685	BYG10J
6157	9322 099 61685	BYG10J
6158	9322 099 61685	BYG10J
6159	9322 099 61685	BYG10J
6460	4822 130 11397	BAS316
6461	4822 130 11397	BAS316
6506	4822 130 83147	DF06M
6807	9322 199 74682	GBJ6J-B15
6B91	4822 130 11596	BYW29EX-200
6B93	4822 130 11596	BYW29EX-200
6D60	4822 130 11397	BAS316
6D61	4822 130 11397	BAS316
6H07	9322 199 74682	GBJ6J-B15
6U01	4822 130 11397	BAS316
6U02	4822 130 11397	BAS316
6U03	4822 130 11397	BAS316

6U04	4822 130 80622	BAT54
6U05	4822 130 80622	BAT54
6U06	4822 130 11397	BAS316
6U07	4822 130 11397	BAS316
6U08	4822 130 11397	BAS316
6U09	4822 130 11152	UDZ18B
6U10	4822 130 11397	BAS316
6U11	4822 130 11397	BAS316
6U12	9322 208 80685	BZG05C15
6U13	9322 208 80685	BZG05C15
6U15	9340 548 67115	PDZ22B
6U16	4822 130 11397	BAS316
6U17	4822 130 11397	BAS316
6U20	4822 130 11397	BAS316
6U21	9322 192 03687	STPS20H100CFP
6U22	4822 130 11148	UDZ4.7B
6U23	4822 130 11397	BAS316
6U27	4822 130 11397	BAS316
6U28	4822 130 11397	BAS316
6U51	4822 130 11397	BAS316
6U77	9322 202 55685	BYG22D
6U78	5322 130 31938	BYV27-200
6U79	9322 202 55685	BYG22D
6U81	9340 548 67115	PDZ22B

7001	9322 108 21682	MC34067P
7002▲	9322 149 04682	TCET1102
7004	3198 010 42310	BC847BW
7005	9322 192 18687	STP15NK50ZFP
7006	9322 192 18687	STP15NK50ZFP
7007	3198 010 42320	BC857BW
7008	3198 010 42320	BC857BW
7009	3198 010 42320	BC857BW
7010	4822 209 16406	TL431ACD
7017	3198 010 42320	BC857BW
7018	3198 010 42310	BC847BW
7030	3198 010 42310	BC847BW
7U01	9322 108 21682	MC34067P
7U02▲	9322 149 04682	TCET1102
7U04	3198 010 42310	BC847BW
7U05	9322 192 18687	STP15NK50ZFP
7U06	9322 192 18687	STP15NK50ZFP
7U07	3198 010 42320	BC857BW
7U08	3198 010 42320	BC857BW
7U09	3198 010 42320	BC857BW
7U10	4822 209 16406	TL431ACD
7U17	3198 010 42320	BC857BW
7U18	3198 010 42310	BC847BW
7U30	3198 010 42310	BC847BW

Interface DC/DC Panel [AB]

Various

1D40	2422 025 18736	Conn. 12p m SMD no-Pb
1D55	2422 025 17765	Connector 7p m

2D10	5322 124 41945	22µF 20% 35V
2D30	2238 586 59812	100nF 20% 50V 0603
2D31	2020 552 96618	1nF 10% 50V 0402
2D32	2238 586 59812	100nF 20% 50V 0603
2D33	2022 552 05635	22µF 10% 16V
2D33	2222 784 13681	22µF 10% 16V X5R 1812
2D34	2022 552 05635	22µF 10% 16V
2D34	2222 784 13681	22µF 10% 16V X5R 1812
2D35	2238 586 59812	100nF 20% 50V 0603
2D36	2022 552 05679	1µF 10% 16V 0805
2D37	2020 552 96618	1nF 10% 50V 0402
2D38	2020 552 96618	1nF 10% 50V 0402
2D39	2020 552 96618	1nF 10% 50V 0402
2D40	2238 586 59812	100nF 20% 50V 0603
2D41	2238 586 59812	100nF 20% 50V 0603
2D42	2238 916 15641	22nF 10% 25V 0603
2D43	2022 552 05635	22µF 10% 16V
2D43	2222 784 13681	22µF 10% 16V X5R 1812
2D44	2020 552 96628	10nF 10% 16V 0402
2D45	2020 552 96628	10nF 10% 16V 0402
2D46	3198 035 04710	470pF 50V 0402
2D47	2238 586 59812	100nF 20% 50V 0603
2D48	5322 124 41945	22µF 20% 35V
2D49	2020 552 96628	10nF 10% 16V 0402
2D50	2022 552 05679	1µF 10% 16V 0805
2D51	2238 586 59812	100nF 20% 50V 0603
2D52	2238 586 59812	100nF 20% 50V 0603
2D53	2020 552 96618	1nF 10% 50V 0402
2D54	2238 586 59812	100nF 20% 50V 0603
2D55	2020 552 96618	1nF 10% 50V 0402
2D56	3198 035 03320	3.3nF 5% 50V 0402
2D57	2020 552 96628	10nF 10% 16V 0402
2D59	4822 117 13605	Jumper 0402
2D61	4822 117 13605	Jumper 0402
2D62	2020 552 96628	10nF 10% 16V 0402

3D20	4822 117 13606	10kΩ 5% 0.01W 0402
3D21	4822 117 13606	10kΩ 5% 0.01W 0402
3D22	4822 117 13606	10kΩ 5% 0.01W 0402
3D23	4822 117 13545	100Ω 1% 0402
3D24	3198 031 04730	47Ω 5% 0402
3D25▲	5322 117 11726	10Ω 5%
3D26	4822 117 13548	1kΩ 5% 0402
3D27	4822 051 30109	10Ω 5% 0.062W
3D28	4822 051 30109	10Ω 5% 0.062W
3D29	4822 117 11297	100kΩ 5% 0.1W
3D30	4822 117 13613	2.2Ω 5% 0603
3D31	3198 031 06820	6.8kΩ 5% 0.01W 0402
3D32	4822 117 13548	1kΩ 5% 0402
3D33	4822 117 13606	10kΩ 5% 0.01W 0402
3D34	2322 706 71002	1kΩ 1% 0402
3D35	2322 706 73902	3.9kΩ 1% 0402
3D36	3198 031 02720	2.7kΩ 5% 0.01W 0402
3D37	3198 031 04720	4.7kΩ 5% 0402
3D38	4822 117 13548	1kΩ 5% 0402
3D39	3198 031 04720	4.7kΩ 5% 0402
3D40	4822 117 13606	10kΩ 5% 0.01W 0402
3D41	4822 117 13606	10kΩ 5% 0.01W 0402
3D42	4822 117 13606	10kΩ 5% 0.01W 0402
3D43	4822 117 13548	1kΩ 5% 0402
3D44	4822 117 13606	10kΩ 5% 0.01W 0402
3D45	3198 031 04730	47Ω 5% 0402
3D47	4822 117 13545	100Ω 1% 0402
3D48	4822 117 13606	10kΩ 5% 0.01W 0402
3D49	4822 117 13606	10kΩ 5% 0.01W 0402
3D50	4822 117 13606	10kΩ 5% 0.01W 0402
3D51	4822 117 13606	10kΩ 5% 0.01W 0402
3D52	4822 117 13545	100Ω 1% 0402
3D53	4822 117 13608	4.7Ω 5% 0603 0.62W
3D58	4822 117 13545	100Ω 1% 0402
3D60	4822 117 13545	100Ω 1% 0402
3D62	4822 117 13596	220Ω 5% 0.01W 0402
9D81	4822 051 20008	Jumper 0805
9D82	4822 051 20008	Jumper 0805
9D83	4822 117 13605	Jumper 0402

5D11	2422 536 00671	10µH 20%
5D12	2422 549 44197	Bead 220Ω at 100MHz
5D13	2422 549 44197	Bead 220Ω at 100MHz
5D14	2422 536 00779	10µH 20%

6D01	9322 159 70685	MM3Z9V1
6D02	4822 130 11397	BAS316
6D06	3198 020 55680	BZX384-C5V6
6D62	9322 102 64685	UDZ2.7B

7D04	9322 182 77668	L6910
7D05	9322 160 70668	SI4936ADY
7D06	9340 425 20115	BC847BS
7D08	9340 425 30115	BC847BPN
7D09	3198 010 42310	BC847BW
7D10	9340 425 30115	BC847BPN

Ambilight inverter Panel [AL]

Various

1010▲	2422 086 00657	Fuse 3A 125V F SMD
1050	2422 543 01431	Xtal 20MHz 16pF
1M08	2422 025 09406	Connector 4p m
1M10	2422 025 09406	Connector 4p m
1M11	2422 025 19068	Connector 11p m
1M12	2422 025 19069	Connector 3p m
1M48	2422 025 10768	Connector 3p m
1M49	2422 025 18884	Connector 4p m
8135	3104 311 08801	Flex foil 40p/140/40p
8220	3104 311 07281	Cable 12p/680/12p
8303	3104 311 07971	Cable 10p/280/10p
8308	3104 311 06951	Cable 2p3/180/2p
8336	3104 311 07471	Cable 11p/680/11p
8346	3104 311 07401	Cable 11p/180/11p
8349	3104 311 10511	Cable 4p/180/4p
8352	3104 311 06061	Cable 9p/180/9p

2001	2020 012 00018	1000µF 20% 16V
2002	2238 586 59812	100nF 20% 50V 0603
2003	2020 552 96618	1nF 10% 50V 0402
2004	2020 552 96618	1nF 10% 50V 0402
2005	3198 034 01590	15pF 1% 50V 0402
2006	3198 034 01590	15pF 1% 50V 0402
2020	2238 580 15645	47nF 10% 50V 0805
2021	2238 580 15645	47nF 10% 50V 0805
2030	2238 580 15645	47nF 10% 50V 0805
2032	2238 580 15645	47nF 10% 50V 0805
2040	2238 580 15645	47nF 10% 50V 0805
2042	2238 580 15645	47nF 10% 50V 0805
2050	2238 580 15645	47nF 10% 50V 0805
2052	2238 580 15645	47nF 10% 50V 0805
2060	2238 580 15645	47nF 10% 50V 0805
2062	2238 580 15645	47nF 10% 50V 0805
2070	2238 580 15645	47nF 10% 50V 0805
2071	2238 580 15645	47nF 10% 50V 0805

3003	4822 117 13596	220Ω 5% 0.01W 0402
3004	4822 051 20471	470Ω 5% 0.1W
3005	4822 051 20561	560Ω 5% 0.1W
3006	2322 762 60102	1kΩ 5% 2512
3007	2322 762 60102	1kΩ 5% 2512
3008	4822 051 20471	470Ω 5% 0.1W
3009	4822 051 20561	560Ω 5% 0.1W
3010	2322 762 60102	1kΩ 5% 2512
3011	2322 762 60102	1kΩ 5% 2512
3012	4822 051 20471	470Ω 5% 0.1W
3013	4822 051 20561	560Ω 5% 0.1W
3014	2322 762 60102	1kΩ 5% 2512
3015	2322 762 60102	1kΩ 5% 2512
3016	3198 031 04720	4.7kΩ 5% 0402
3017	3198 031 04720	4.7kΩ 5% 0402
3018	3198 031 04720	4.7kΩ 5% 0402
3019	3198 031 04720	4.7kΩ 5% 0402
3020	3198 031 04720	4.7kΩ 5% 0402
3022	4822 117 13545	100Ω 1% 0402
3023	4822 117 13545	100Ω 1% 0402
3024	3198 031 04720	4.7kΩ 5% 0402
3025	3198 031 04720	4.7kΩ 5% 0402
3028	4822 117 13606	10kΩ 5% 0.01W 0402
3029	3198 031 04720	4.7kΩ 5% 0402
3030	3198 031 04720	4.7kΩ 5% 0402
3031	3198 031 04720	4.7kΩ 5% 0402
3042	4822 053 20105	1MΩ 5% 0.25W
3999	4822 051 30103	10kΩ 5% 0.062W

5002	2422 536 00923	22µH 10% LHL10
5007	2422 536 00923	22µH 10% LHL10
5008	2422 536 00923	22µH 10% LHL10
5014▲	3104 308 21271	Transf. BD21416-00
5015▲	3104 308 21271	Transf. BD21416-00
5016▲	3104 308 21271	Transf. BD21416-00

6000	4822 130 11397	BAS316
6001	4822 130 11397	BAS316
6002	4822 130 11397	BAS316
6003	4822 130 11397	BAS316
6004	4822 130 11397	BAS316
6005	4822 130 11397	BAS316
6006	4822 130 11152	UDZ18B
6007	4822 130 11152	UDZ18B
6008	4822 130 11152	UDZ18B
6009	4822 130 11152	UDZ18B
6010	4822 130 11152	UDZ18B
6011	4822 130 11152	UDZ18B

7001	9352 711 46118	P87LPC760BDH
7002	9322 202 58668	LD1117DT50
7009	3198 010 42310	BC847BW
7010	3198 010 42310	BC847BW
7011	3198 010 42310	BC847BW
7015	9322 214 20668	SI4946EY
7016	9322 214 20668	SI4946EY
7017	9322 214 20668	SI4946EY
7018	3198 010 42310	BC847BW
7019	3198 010 42310	BC847BW
7020	3198 010 42310	BC847BW

Small Signal Board [B]

Various

1A33▲	2422 086 11092	Fuse 500mA 50V F SMD
1A51	2422 549 44369	SAW 38.9MHz K9656L
1A52	2422 549 44372	SAW 38.9MHz K3953L
1B01	2422 033 00018	Connector 19p f
1B30	2422 549 00146	Line filter 20V 3A
1B31	2422 549 00146	Line filter 20V 3A
1B32	2422 549 00146	Line filter 20V 3A
1B33	2422 549 00146	Line filter 20V 3A
1B34	2422 549 00146	Line filter 20V 3A
1B35	2422 549 00146	Line filter 20V 3A
1B36	2422 549 00146	Line filter 20V 3A
1B37	2422 549 00146	Line filter 20V 3A
1C33▲	2422 086 11092	Fuse 500mA 50V F SMD
1C51	2422 549 44369	SAW 38.9MHz K9656L
1C52	2422 549 44372	SAW 38.9MHz K3953L
1E35	2422 025 17601	Connector 40p f
1G02	2422 025 17274	Connector 10p m
1G50	2422 025 18427	Connector 31p f
1H00	2422 543 01397	Xtal 27MHz 18pF
1H01	2422 025 17775	Socket USB 4p f
1I00	2422 026 05753	Socket CINCH H 6p f 2L3
1I10	2422 026 05393	Socket 2p f
1LA0	4822 242 11006	16MHz DSX840GA
1M01	2422 025 10768	Connector 3p m
1M03	2422 025 10771	Connector 10p m
1M15	4822 267 10459	Connector 3p
1M20	2422 025 10772	Connector 12p m
1M36	2422 025 10655	Connector 11p m
1M46	2422 025 10655	Connector 11p m
1M49	2422 025 18884	Connector 4p m
1M52	2422 025 10769	Connector 9p m
1N00	2422 543 01095	Res. 12MHz DSX840
1O00	2422 543 01398	Xtl 25MHz 18pF DSX840
1O10	2422 025 18056	Jack 8p Ethernet
1P00	2422 025 18133	Socket SCART
1T03	3139 147 22181	Tuner UV1318ST/AIHN-3
1U01▲	2422 086 00623	Fuse 3A T 125V
1U04▲	2422 086 00623	Fuse 3A T 125V
1W02	3139 147 22161	Tuner UV1318S/AIHN-3
8192	3104 311 05362	Wire phono M/120/IEC

⊣⊢

2A01	2238 787 15641	22nF 5% 16V 0402
2A03	2238 787 15641	22nF 5% 16V 0402
2A04	2238 787 15641	22nF 5% 16V 0402
2A05	2238 787 15641	22nF 5% 16V 0402
2A06	2238 787 15641	22nF 5% 16V 0402
2A07	2238 787 15641	22nF 5% 16V 0402
2A08	2238 787 15641	22nF 5% 16V 0402
2A09	2238 787 15641	22nF 5% 16V 0402
2A10	2238 787 15641	22nF 5% 16V 0402
2A12	2238 787 15641	22nF 5% 16V 0402
2A13	2238 787 15641	22nF 5% 16V 0402
2A15	2238 787 15641	22nF 5% 16V 0402
2A16	2238 787 15641	22nF 5% 16V 0402
2A17	2238 787 15641	22nF 5% 16V 0402
2A18	2238 787 15641	22nF 5% 16V 0402
2A19	2238 787 15641	22nF 5% 16V 0402
2A20	2238 787 15641	22nF 5% 16V 0402
2A21	2020 004 90283	10µF 20% 10V 1206
2A22	2238 586 59812	100nF 20% 50V 0603
2A23	2238 586 59812	100nF 20% 50V 0603
2A25	4822 124 23002	10µF 16V
2A27	2238 586 59812	100nF 20% 50V 0603
2A28	2238 586 59812	100nF 20% 50V 0603
2A29	4822 124 23002	10µF 16V
2A30	2022 552 05679	1µF 10% 16V 0805
2A31	2020 552 96628	10nF 10% 16V 0402
2A32	2020 552 96628	10nF 10% 16V 0402
2A33	2020 552 96628	10nF 10% 16V 0402
2A35	2238 586 59812	100nF 20% 50V 0603
2A36	2022 552 05679	1µF 10% 16V 0805
2A39	2238 586 59812	100nF 20% 50V 0603
2A40	2238 586 59812	100nF 20% 50V 0603
2A41	2020 552 96628	10nF 10% 16V 0402
2A42	4822 126 14491	2.2µF 10V 0805
2A44	2238 586 59812	100nF 20% 50V 0603
2A45	4822 124 23002	10µF 16V
2A52	4822 124 23002	10µF 16V
2A53	2020 552 96628	10nF 10% 16V 0402
2A54	2020 552 96618	1nF 10% 50V 0402
2A55	2238 586 59812	100nF 20% 50V 0603
2A56	2022 552 05679	1µF 10% 16V 0805
2A57	2020 552 96628	10nF 10% 16V 0402
2A59	3198 032 55130	10µF 20% 20V
2A60	2020 552 96628	10nF 10% 16V 0402
2A61	2022 552 05679	1µF 10% 16V 0805
2A63	2238 586 59812	100nF 20% 50V 0603
2A64	2020 004 00003	330µF 20% 6.3V
2A65	2020 552 96628	10nF 10% 16V 0402
2A66	3198 032 55130	10µF 20% 20V
2A67	2022 552 05679	1µF 10% 16V 0805
2A68	2022 552 05679	1µF 10% 16V 0805
2A69	2238 586 59812	100nF 20% 50V 0603
2A70	2020 552 96628	10nF 10% 16V 0402
2A71	2020 552 96628	10nF 10% 16V 0402
2A74	2020 552 96628	10nF 10% 16V 0402
2A81	2022 552 05679	1µF 10% 16V 0805
2A82	2238 586 59812	100nF 20% 50V 0603
2A84	2022 552 05679	1µF 10% 16V 0805
2A85	4822 126 14324	33pF 5% 50V 0402
2A88	2238 586 59812	100nF 20% 50V 0603
2A89	2238 586 59812	100nF 20% 50V 0603
2A90	2022 552 05679	1µF 10% 16V 0805
2A91	4822 126 14324	33pF 5% 50V 0402
2A92	4822 126 14324	33pF 5% 50V 0402
2A93	2238 586 59812	100nF 20% 50V 0603
2A96	2022 552 05679	1µF 10% 16V 0805
2A97	2022 552 05679	1µF 10% 16V 0805
2A98	4822 126 14324	33pF 5% 50V 0402
2A99	4822 126 14324	33pF 5% 50V 0402
2B00	2238 586 59812	100nF 20% 50V 0603
2B01	2238 586 59812	100nF 20% 50V 0603
2B02	2238 586 59812	100nF 20% 50V 0603
2B03	2238 586 59812	100nF 20% 50V 0603
2B04	2238 586 59812	100nF 20% 50V 0603
2B05	2238 586 59812	100nF 20% 50V 0603
2B06	2238 586 59812	100nF 20% 50V 0603
2B07	2238 586 59812	100nF 20% 50V 0603
2B10	3198 034 01580	1.5pF 1% 50V 0402
2B12	3198 034 01580	1.5pF 1% 50V 0402
2B13	3198 034 01580	1.5pF 1% 50V 0402
2B15	3198 034 01580	1.5pF 1% 50V 0402
2B16	3198 034 01580	1.5pF 1% 50V 0402
2B18	3198 034 01580	1.5pF 1% 50V 0402
2B20	2020 552 96628	10nF 10% 16V 0402
2B21	2020 552 96628	10nF 10% 16V 0402
2B22	2020 552 96628	10nF 10% 16V 0402
2B23	2020 552 96628	10nF 10% 16V 0402
2B24	2020 552 96628	10nF 10% 16V 0402
2B25	2020 552 96628	10nF 10% 16V 0402
2B26	2020 552 96628	10nF 10% 16V 0402
2B27	2020 552 96628	10nF 10% 16V 0402
2B28	2020 552 96628	10nF 10% 16V 0402
2B29	2020 552 96628	10nF 10% 16V 0402
2B30	2020 552 96628	10nF 10% 16V 0402
2B34	2020 552 96628	10nF 10% 16V 0402
2B35	2020 552 96628	10nF 10% 16V 0402
2B36	2020 552 96628	10nF 10% 16V 0402
2B38	2022 552 05679	1µF 10% 16V 0805
2B39	4822 124 81058	47µF 20% 4V
2B40	2238 586 59812	100nF 20% 50V 0603
2B41	2238 586 59812	100nF 20% 50V 0603
2B42	2238 586 59812	100nF 20% 50V 0603
2B43	2238 586 59812	100nF 20% 50V 0603
2B44	2238 586 59812	100nF 20% 50V 0603
2B45	2238 586 59812	100nF 20% 50V 0603
2B46	2238 586 59812	100nF 20% 50V 0603
2B47	2238 586 59812	100nF 20% 50V 0603
2B48	2238 586 59812	100nF 20% 50V 0603
2B50	4822 124 81058	47µF 20% 4V
2B52	2238 586 59812	100nF 20% 50V 0603
2B54	2238 586 59812	100nF 20% 50V 0603
2B57	2238 586 59812	100nF 20% 50V 0603
2B61	2238 586 59812	100nF 20% 50V 0603
2B62	2238 586 59812	100nF 20% 50V 0603
2B63	2238 586 59812	100nF 20% 50V 0603
2B64	2238 586 59812	100nF 20% 50V 0603
2B66	2238 586 59812	100nF 20% 50V 0603
2B67	2022 009 00703	330µF 20% 6.3V
2B68	4822 124 81058	47µF 20% 4V
2B69	2238 586 59812	100nF 20% 50V 0603
2B70	4822 124 81058	47µF 20% 4V
2B71	4822 124 81058	47µF 20% 4V
2B72	2238 586 59812	100nF 20% 50V 0603
2B73	4822 124 81058	47µF 20% 4V
2B74	4822 124 81058	47µF 20% 4V
2B75	4822 124 81058	47µF 20% 4V
2B76	4822 124 81058	47µF 20% 4V
2B77	2238 586 59812	100nF 20% 50V 0603
2B78	2238 586 59812	100nF 20% 50V 0603
2B79	2238 586 59812	100nF 20% 50V 0603
2B80	2238 586 59812	100nF 20% 50V 0603
2B81	2238 586 59812	100nF 20% 50V 0603
2B85	2238 586 59812	100nF 20% 50V 0603
2B86	2238 586 59812	100nF 20% 50V 0603
2B88	2238 586 59812	100nF 20% 50V 0603
2B89	2238 586 59812	100nF 20% 50V 0603
2B90	2238 586 59812	100nF 20% 50V 0603
2B91	4822 124 81058	47µF 20% 4V
2B92	2238 586 59812	100nF 20% 50V 0603
2B93	2238 586 59812	100nF 20% 50V 0603
2B94	2238 586 59812	100nF 20% 50V 0603
2BA0	2020 552 96628	10nF 10% 16V 0402
2BA1	3198 035 14720	4.7nF 5% 25V 0402
2BA2	2020 552 96628	10nF 10% 16V 0402
2BA3	3198 035 14720	4.7nF 5% 25V 0402
2BB0	2238 869 15109	10pF 5% 50V 0402
2BB2	2238 869 15109	10pF 5% 50V 0402
2BB4	2238 869 15109	10pF 5% 50V 0402
2BB5	2238 869 15109	10pF 5% 50V 0402
2BB6	2238 869 15109	10pF 5% 50V 0402
2BB8	2238 869 15109	10pF 5% 50V 0402
2C01	2238 787 15641	22nF 5% 16V 0402
2C03	2238 787 15641	22nF 5% 16V 0402
2C04	2238 787 15641	22nF 5% 16V 0402
2C05	2238 787 15641	22nF 5% 16V 0402
2C06	2238 787 15641	22nF 5% 16V 0402
2C07	2238 787 15641	22nF 5% 16V 0402
2C08	2238 787 15641	22nF 5% 16V 0402
2C09	2238 787 15641	22nF 5% 16V 0402
2C12	2238 787 15641	22nF 5% 16V 0402
2C13	2238 787 15641	22nF 5% 16V 0402
2C15	2238 787 15641	22nF 5% 16V 0402
2C16	2238 787 15641	22nF 5% 16V 0402
2C17	2238 787 15641	22nF 5% 16V 0402
2C18	2238 787 15641	22nF 5% 16V 0402
2C19	2238 787 15641	22nF 5% 16V 0402
2C20	2238 787 15641	22nF 5% 16V 0402
2C21	2020 004 90283	10µF 20% 10V 1206
2C22	2238 586 59812	100nF 20% 50V 0603
2C23	2238 586 59812	100nF 20% 50V 0603
2C25	2020 004 90283	10µF 20% 10V 1206
2C27	2238 586 59812	100nF 20% 50V 0603
2C28	2238 586 59812	100nF 20% 50V 0603
2C31	2238 586 59812	100nF 20% 50V 0603
2C33	2022 552 05679	1µF 10% 16V 0805
2C34	2238 586 59812	100nF 20% 50V 0603
2C35	2238 586 59812	100nF 20% 50V 0603
2C36	2022 552 05679	1µF 10% 16V 0805
2C37	2022 552 05679	1µF 10% 16V 0805
2C38	2022 552 05679	1µF 10% 16V 0805
2C39	2238 586 59812	100nF 20% 50V 0603
2C40	2238 586 59812	100nF 20% 50V 0603
2C41	2020 552 96618	1nF 10% 50V 0402
2C42	4822 126 14491	2.2µF 10V 0805
2C44	2238 586 59812	100nF 20% 50V 0603
2C45	4822 124 23002	10µF 16V
2C46	2022 552 05679	1µF 10% 16V 0805
2C47	2238 586 59812	100nF 20% 50V 0603
2C48	2022 552 05679	1µF 10% 16V 0805
2C49	2022 552 05679	1µF 10% 16V 0805
2C52	4822 124 23002	10µF 16V
2C53	2020 552 96628	10nF 10% 16V 0402
2C55	2238 586 59812	100nF 20% 50V 0603
2C56	2022 552 05679	1µF 10% 16V 0805
2C57	2020 552 96628	10nF 10% 16V 0402
2C59	4822 124 23002	10µF 16V
2C60	2020 552 96628	10nF 10% 16V 0402
2C61	2020 552 96628	10nF 10% 16V 0402
2C62	2238 787 15641	22nF 5% 16V 0402
2C63	2238 586 59812	100nF 20% 50V 0603
2C64	2020 004 00003	330µF 20% 6.3V
2C65	2020 552 96628	10nF 10% 16V 0402
2C66	4822 124 23002	10µF 16V
2C67	2022 552 05679	1µF 10% 16V 0805
2C68	2022 552 05679	1µF 10% 16V 0805
2C69	2238 586 59812	100nF 20% 50V 0603
2C70	2020 552 96628	10nF 10% 16V 0402
2C72	2020 552 96618	1nF 10% 50V 0402
2C73	4822 124 23002	10µF 16V
2C74	2020 552 96628	10nF 10% 16V 0402
2C78	2022 552 05679	1µF 10% 16V 0805
2C82	2020 552 96628	10nF 10% 16V 0402
2C99	2022 552 05679	1µF 10% 16V 0805
2E00	2238 869 15101	100pF 5% 50V 0402
2E01	2238 869 15101	100pF 5% 50V 0402
2E02	2238 869 15101	100pF 5% 50V 0402
2E03	2238 869 15101	100pF 5% 50V 0402
2E04	2238 869 15101	100pF 5% 50V 0402
2E05	2238 869 15101	100pF 5% 50V 0402
2E06	2238 869 15101	100pF 5% 50V 0402
2E08	2238 586 59812	100nF 20% 50V 0603
2E12	2238 869 15101	100pF 5% 50V 0402
2E13	2022 552 05679	1µF 10% 16V 0805
2E14	2022 552 05679	1µF 10% 16V 0805
2E16	2238 586 59812	100nF 20% 50V 0603
2E17	2238 586 59812	100nF 20% 50V 0603
2E19	2020 004 90283	10µF 20% 10V 1206
2E20	2020 552 96618	1nF 10% 50V 0402
2E25	2238 869 15101	100pF 5% 50V 0402
2E26	2238 869 15101	100pF 5% 50V 0402
2E30	2238 869 15101	100pF 5% 50V 0402
2E31	2238 869 15101	100pF 5% 50V 0402

2E53	2238 869 15101	100pF 5% 50V 0402
2E54	2238 869 15101	100pF 5% 50V 0402
2E56	2238 869 15101	100pF 5% 50V 0402
2E58	2238 869 15101	100pF 5% 50V 0402
2E60	2238 869 15101	100pF 5% 50V 0402
2E62	2238 869 15101	100pF 5% 50V 0402
2E64	2238 869 15101	100pF 5% 50V 0402
2E70	2238 869 15109	10pF 5% 50V 0402
2E72	2238 787 15641	22nF 5% 16V 0402
2E74	2238 869 15101	100pF 5% 50V 0402
2E76	2238 869 15101	100pF 5% 50V 0402
2E78	2238 869 15101	100pF 5% 50V 0402
2E80	2238 869 15101	100pF 5% 50V 0402
2E90	2238 869 15101	100pF 5% 50V 0402
2E92	2238 869 15101	100pF 5% 50V 0402
2E94	2238 869 15109	10pF 5% 50V 0402
2F12	2238 586 59812	100nF 20% 50V 0603
2F13	2238 586 59812	100nF 20% 50V 0603
2F14	2238 586 59812	100nF 20% 50V 0603
2F15	2238 586 59812	100nF 20% 50V 0603
2F17	2238 586 59812	100nF 20% 50V 0603
2F18	2238 586 59812	100nF 20% 50V 0603
2F19	2238 586 59812	100nF 20% 50V 0603
2F20	2238 586 59812	100nF 20% 50V 0603
2F21	2238 586 59812	100nF 20% 50V 0603
2F23	2238 586 59812	100nF 20% 50V 0603
2F24	2238 586 59812	100nF 20% 50V 0603
2F25	2020 552 96628	10nF 10% 16V 0402
2F26	2022 552 05679	1µF 10% 16V 0805
2F27	2020 552 96628	10nF 10% 16V 0402
2F28	2022 552 05679	1µF 10% 16V 0805
2F31	2238 586 59812	100nF 20% 50V 0603
2F32	2238 586 59812	100nF 20% 50V 0603
2F33	2238 586 59812	100nF 20% 50V 0603
2F34	2238 586 59812	100nF 20% 50V 0603
2F35	2238 586 59812	100nF 20% 50V 0603
2F36	2022 552 05679	1µF 10% 16V 0805
2F37	2022 552 05679	1µF 10% 16V 0805
2F38	2022 552 05679	1µF 10% 16V 0805
2F39	2238 586 59812	100nF 20% 50V 0603
2F40	2022 552 05679	1µF 10% 16V 0805
2F62	2022 552 05679	1µF 10% 16V 0805
2G00	2020 552 96628	10nF 10% 16V 0402
2G01	2020 552 96628	10nF 10% 16V 0402
2G02	2020 552 96628	10nF 10% 16V 0402
2G03	2020 552 96628	10nF 10% 16V 0402
2G04	2238 586 59812	100nF 20% 50V 0603
2G05	2022 552 05679	1µF 10% 16V 0805
2G06	2238 586 59812	100nF 20% 50V 0603
2G07	2238 586 59812	100nF 20% 50V 0603
2G08	2238 586 59812	100nF 20% 50V 0603
2G09	2238 586 59812	100nF 20% 50V 0603
2G10	2238 586 59812	100nF 20% 50V 0603
2G11	4822 124 81058	47µF 20% 4V
2G12	2238 586 59812	100nF 20% 50V 0603
2G13	2238 586 59812	100nF 20% 50V 0603
2G14	2238 586 59812	100nF 20% 50V 0603
2G15	2020 552 96628	10nF 10% 16V 0402
2G16	4822 124 81058	47µF 20% 4V
2G17	2238 586 59812	100nF 20% 50V 0603
2G18	2238 586 59812	100nF 20% 50V 0603
2G30	2020 552 96628	10nF 10% 16V 0402
2G31	2022 552 05679	1µF 10% 16V 0805
2G32	2020 552 96628	10nF 10% 16V 0402
2G33	2020 552 96628	10nF 10% 16V 0402
2G34	2020 552 96628	10nF 10% 16V 0402
2G35	2238 586 59812	100nF 20% 50V 0603
2G36	2238 586 59812	100nF 20% 50V 0603
2G37	2238 586 59812	100nF 20% 50V 0603
2G38	2238 586 59812	100nF 20% 50V 0603
2G39	2020 552 96628	10nF 10% 16V 0402
2G42	2238 869 15109	10pF 5% 50V 0402
2G50	2020 552 96628	10nF 10% 16V 0402
2G51	2022 552 05679	1µF 10% 16V 0805
2G52	2238 586 59812	100nF 20% 50V 0603
2G53	2238 586 59812	100nF 20% 50V 0603
2G54	4822 124 81058	47µF 20% 4V
2G55	2238 586 59812	100nF 20% 50V 0603
2G56	2022 552 05679	1µF 10% 16V 0805
2G57	2238 586 59812	100nF 20% 50V 0603
2G58	2020 552 96618	1nF 10% 50V 0402
2G59	2022 552 05679	1µF 10% 16V 0805
2G73	3198 035 04710	470pF 50V 0402
2G74	3198 035 04710	470pF 50V 0402
2G80	2238 586 59812	100nF 20% 50V 0603
2G81	2238 586 59812	100nF 20% 50V 0603
2G82	2238 586 59812	100nF 20% 50V 0603
2G83	2238 586 59812	100nF 20% 50V 0603
2G84	2238 586 59812	100nF 20% 50V 0603
2G85	2238 586 59812	100nF 20% 50V 0603
2G86	2238 586 59812	100nF 20% 50V 0603
2G87	2238 586 59812	100nF 20% 50V 0603
2G88	2238 586 59812	100nF 20% 50V 0603
2G89	2238 586 59812	100nF 20% 50V 0603
2GA1	2238 586 59812	100nF 20% 50V 0603
2GA2	2022 552 05679	1µF 10% 16V 0805
2GA3	2238 586 59812	100nF 20% 50V 0603
2GB4	2238 869 15109	10pF 5% 50V 0402
2GB5	2238 869 15109	10pF 5% 50V 0402
2GB6	2238 869 15109	10pF 5% 50V 0402
2GB7	2238 869 15109	10pF 5% 50V 0402
2GB8	2238 869 15109	10pF 5% 50V 0402
2GB9	2238 869 15109	10pF 5% 50V 0402
2GC0	2238 869 15109	10pF 5% 50V 0402
2GC1	2238 869 15109	10pF 5% 50V 0402
2GC2	2238 869 15109	10pF 5% 50V 0402
2GC3	2238 869 15109	10pF 5% 50V 0402
2GC4	2238 869 15109	10pF 5% 50V 0402
2GC5	2238 869 15109	10pF 5% 50V 0402
2GC6	2238 869 15109	10pF 5% 50V 0402
2GC7	2238 869 15109	10pF 5% 50V 0402
2GC8	2238 869 15109	10pF 5% 50V 0402
2GC9	2238 869 15109	10pF 5% 50V 0402
2GD0	2238 869 15109	10pF 5% 50V 0402
2GD1	2238 869 15109	10pF 5% 50V 0402
2GD2	2238 869 15109	10pF 5% 50V 0402
2H01	2238 586 59812	100nF 20% 50V 0603
2H02	2238 586 59812	100nF 20% 50V 0603
2H03	2238 586 59812	100nF 20% 50V 0603
2H08	3198 034 02790	47pF 1% 50V 0402
2H09	3198 034 02790	47pF 1% 50V 0402
2H12	3198 034 02790	47pF 1% 50V 0402
2I02	2238 586 59812	100nF 20% 50V 0603
2I05	2238 869 15101	100pF 5% 50V 0402
2I06	2238 869 15101	100pF 5% 50V 0402
2I20	2238 586 59812	100nF 20% 50V 0603
2I35	2238 586 59812	100nF 20% 50V 0603
2I36	2238 586 59812	100nF 20% 50V 0603
2I37	2238 586 59812	100nF 20% 50V 0603
2I38	2238 586 59812	100nF 20% 50V 0603
2I58	2238 586 59812	100nF 20% 50V 0603
2I59	4822 124 12108	100µF 20% 4V
2I61	2238 586 59812	100nF 20% 50V 0603
2I91	2238 586 59812	100nF 20% 50V 0603
2I92	2238 586 59812	100nF 20% 50V 0603
2I93	2022 552 05679	1µF 10% 16V 0805
2I94	2238 586 59812	100nF 20% 50V 0603
2I95	4822 124 23002	10µF 16V
2I98	2022 552 05679	1µF 10% 16V 0805
2J00	4822 124 12108	100µF 20% 4V
2J01	2238 586 59812	100nF 20% 50V 0603
2J02	2238 869 15101	100pF 5% 50V 0402
2J03	2238 586 59812	100nF 20% 50V 0603
2J05	2238 869 15101	100pF 5% 50V 0402
2J06	2238 586 59812	100nF 20% 50V 0603
2J08	2238 586 59812	100nF 20% 50V 0603
2J10	2238 586 59812	100nF 20% 50V 0603
2J12	2238 869 15101	100pF 5% 50V 0402
2J13	2238 586 59812	100nF 20% 50V 0603
2J14	3198 035 03320	3.3nF 5% 50V 0402
2J15	2238 869 15101	100pF 5% 50V 0402
2J16	2238 586 59812	100nF 20% 50V 0603
2J17	3198 035 03320	3.3nF 5% 50V 0402
2J18	2238 586 59812	100nF 20% 50V 0603
2J20	2238 586 59812	100nF 20% 50V 0603
2J22	3198 035 03320	3.3nF 5% 50V 0402
2J23	3198 035 03320	3.3nF 5% 50V 0402
2J24	3198 035 03320	3.3nF 5% 50V 0402
2J25	3198 035 03320	3.3nF 5% 50V 0402
2J26	3198 035 03320	3.3nF 5% 50V 0402
2J27	3198 035 03320	3.3nF 5% 50V 0402
2J28	3198 035 03320	3.3nF 5% 50V 0402
2K38	2022 552 05679	1µF 10% 16V 0805
2K39	2022 552 05679	1µF 10% 16V 0805
2K40	2238 586 59812	100nF 20% 50V 0603
2K41	2238 586 59812	100nF 20% 50V 0603
2K42	3198 032 47170	47µF 20% 16V
2K43	2238 586 59812	100nF 20% 50V 0603
2K45	2238 586 59812	100nF 20% 50V 0603
2K58	2022 552 05679	1µF 10% 16V 0805
2K60	2022 552 05679	1µF 10% 16V 0805
2K61	2022 552 05679	1µF 10% 16V 0805
2K63	2022 552 05679	1µF 10% 16V 0805
2K67	2022 552 05679	1µF 10% 16V 0805
2K68	2022 552 05679	1µF 10% 16V 0805
2K69	2022 552 05679	1µF 10% 16V 0805
2K70	2022 552 05679	1µF 10% 16V 0805
2K71	2022 552 05679	1µF 10% 16V 0805
2K72	2022 552 05679	1µF 10% 16V 0805
2K73	2022 552 05679	1µF 10% 16V 0805
2K74	2022 552 05679	1µF 10% 16V 0805
2K75	2022 552 05679	1µF 10% 16V 0805
2K76	2022 552 05679	1µF 10% 16V 0805
2K77	2022 552 05679	1µF 10% 16V 0805
2L00	2238 586 59812	100nF 20% 50V 0603
2L01	2238 586 59812	100nF 20% 50V 0603
2L02	2238 869 15101	100pF 5% 50V 0402
2L03	2238 586 59812	100nF 20% 50V 0603
2L05	2020 552 96618	1nF 10% 50V 0402
2L09	3198 034 01080	1pF 1% 50V 0402
2L10	2022 552 05679	1µF 10% 16V 0805
2L11	2022 552 05679	1µF 10% 16V 0805
2L12	2022 552 05679	1µF 10% 16V 0805
2L13	2022 552 05679	1µF 10% 16V 0805
2L14	2238 586 59812	100nF 20% 50V 0603
2L15	2238 586 59812	100nF 20% 50V 0603
2L16	2020 552 96623	2.2nF 10% 50V 0402
2L17	2020 552 96623	2.2nF 10% 50V 0402
2L18	2020 552 96623	2.2nF 10% 50V 0402
2L19	2020 552 96623	2.2nF 10% 50V 0402
2L20	2020 552 96623	2.2nF 10% 50V 0402
2L21	2020 552 96623	2.2nF 10% 50V 0402
2L22	2020 552 96623	2.2nF 10% 50V 0402
2L23	2020 552 96623	2.2nF 10% 50V 0402
2L40	2238 869 15101	100pF 5% 50V 0402
2L41	2238 787 15641	22nF 5% 16V 0402
2L47	2238 869 15101	100pF 5% 50V 0402
2L48	2238 869 15101	100pF 5% 50V 0402
2L50	2238 586 59812	100nF 20% 50V 0603
2L51	2238 586 59812	100nF 20% 50V 0603
2L52	2238 586 59812	100nF 20% 50V 0603
2L53	2238 586 59812	100nF 20% 50V 0603
2L54	2238 586 59812	100nF 20% 50V 0603
2L56	2238 586 59812	100nF 20% 50V 0603
2L57	2238 586 59812	100nF 20% 50V 0603
2L58	2238 869 15101	100pF 5% 50V 0402
2L59	2238 586 59812	100nF 20% 50V 0603
2L60	2238 586 59812	100nF 20% 50V 0603
2L61	2020 552 96618	1nF 10% 50V 0402
2L62	2238 586 59812	100nF 20% 50V 0603
2L63	2022 552 05679	1µF 10% 16V 0805
2L64	2022 552 05679	1µF 10% 16V 0805
2L65	2022 552 05679	1µF 10% 16V 0805
2L66	2022 552 05679	1µF 10% 16V 0805
2LA0	4822 126 14519	22pF 5% 50V 0402
2LA1	4822 126 14519	22pF 5% 50V 0402
2LA4	2238 586 59812	100nF 20% 50V 0603
2LA5	2022 552 05679	1µF 10% 16V 0805
2LB0	2238 586 59812	100nF 20% 50V 0603
2LB1	2238 586 59812	100nF 20% 50V 0603
2LB2	2020 552 96628	10nF 10% 16V 0402
2LN0	4822 124 12108	100µF 20% 4V
2LN1	2022 552 05679	1µF 10% 16V 0805
2LN2	2022 552 05679	1µF 10% 16V 0805
2LN3	2238 586 59812	100nF 20% 50V 0603
2LN4	2238 586 59812	100nF 20% 50V 0603
2LN5	2238 586 59812	100nF 20% 50V 0603
2LN6	2238 586 59812	100nF 20% 50V 0603
2LN7	2020 552 96628	10nF 10% 16V 0402
2LN8	2020 552 96628	10nF 10% 16V 0402
2LN9	4822 124 12108	100µF 20% 4V
2LP0	2020 552 96618	1nF 10% 50V 0402
2LP1	2020 552 96618	1nF 10% 50V 0402
2LP2	2238 586 59812	100nF 20% 50V 0603
2LP3	2238 586 59812	100nF 20% 50V 0603
2LP4	2020 552 96628	10nF 10% 16V 0402
2LP5	2020 552 96628	10nF 10% 16V 0402
2LP6	2020 552 96618	1nF 10% 50V 0402
2LP7	2020 552 96618	1nF 10% 50V 0402
2LP8	2020 552 96618	1nF 10% 50V 0402
2LP9	2020 552 96618	1nF 10% 50V 0402
2LR1	2020 552 96628	10nF 10% 16V 0402
2LR2	2020 552 96618	1nF 10% 50V 0402
2LR3	2020 552 96628	10nF 10% 16V 0402
2LR4	2020 552 96618	1nF 10% 50V 0402
2LR5	2020 552 96628	10nF 10% 16V 0402
2LR6	2020 552 96618	1nF 10% 50V 0402
2LR7	2020 552 96618	1nF 10% 50V 0402
2LR8	2238 869 15101	100pF 5% 50V 0402
2LR9	2020 552 96628	10nF 10% 16V 0402
2LS0	2020 552 96618	1nF 10% 50V 0402
2LS1	2020 552 96618	1nF 10% 50V 0402
2LS2	5322 126 11578	1nF 10% 50V 0603
2LS4	2022 552 05679	1µF 10% 16V 0805
2LS5	2238 586 59812	100nF 20% 50V 0603
2LS6	2238 586 59812	100nF 20% 50V 0603
2LS7	4822 124 12108	100µF 20% 4V
2LS8	2020 552 96618	1nF 10% 50V 0402
2LS9	2238 869 15101	100pF 5% 50V 0402
2LT0	2238 586 59812	100nF 20% 50V 0603
2LT1	2020 552 96618	1nF 10% 50V 0402
2LT2	2238 869 15101	100pF 5% 50V 0402
2LT3	2020 552 96618	1nF 10% 50V 0402
2LT4	2020 552 96618	1nF 10% 50V 0402
2LT5	2238 869 15101	100pF 5% 50V 0402
2LT6	2238 586 59812	100nF 20% 50V 0603
2LT7	2020 552 96618	1nF 10% 50V 0402
2LT8	2020 552 96618	1nF 10% 50V 0402
2LT9	2020 552 96618	1nF 10% 50V 0402
2LU0	2020 552 96618	1nF 10% 50V 0402
2LU2	2020 552 96628	10nF 10% 16V 0402
2LU3	2238 869 15101	100pF 5% 50V 0402

2LU4	2020 552 96618	1nF 10% 50V 0402
2LU5	2020 552 96618	1nF 10% 50V 0402
2M00	2238 869 15101	100pF 5% 50V 0402
2M01	2238 869 15101	100pF 5% 50V 0402
2M02	2238 869 15101	100pF 5% 50V 0402
2M03	2238 869 15101	100pF 5% 50V 0402
2M04	2238 869 15101	100pF 5% 50V 0402
2M05	2238 869 15101	100pF 5% 50V 0402
2M06	2238 869 15101	100pF 5% 50V 0402
2M10	2238 869 15101	100pF 5% 50V 0402
2M11	2238 869 15101	100pF 5% 50V 0402
2M12	2238 869 15101	100pF 5% 50V 0402
2M13	2238 869 15101	100pF 5% 50V 0402
2M14	2238 869 15101	100pF 5% 50V 0402
2M15	2238 869 15101	100pF 5% 50V 0402
2M16	4822 117 13605	Jumper 0402
2M18	2238 869 15101	100pF 5% 50V 0402
2M19	2238 869 15101	100pF 5% 50V 0402
2M20	2238 869 15101	100pF 5% 50V 0402
2M21	2238 869 15101	100pF 5% 50V 0402
2M22	2020 552 96628	10nF 10% 16V 0402
2M29	2238 869 15101	100pF 5% 50V 0402
2M30	2238 869 15101	100pF 5% 50V 0402
2M31	2238 869 15101	100pF 5% 50V 0402
2M47	2238 869 15101	100pF 5% 50V 0402
2M49	2020 552 96628	10nF 10% 16V 0402
2M50	2238 869 15101	100pF 5% 50V 0402
2M51	2238 869 15101	100pF 5% 50V 0402
2M58	2238 869 15101	100pF 5% 50V 0402
2M62	2020 552 96628	10nF 10% 16V 0402
2M65	2238 869 15101	100pF 5% 50V 0402
2M66	2238 869 15101	100pF 5% 50V 0402
2M67	2238 869 15101	100pF 5% 50V 0402
2M68	2238 869 15101	100pF 5% 50V 0402
2M69	2238 869 15101	100pF 5% 50V 0402
2M70	2238 869 15101	100pF 5% 50V 0402
2M71	2238 869 15101	100pF 5% 50V 0402
2M72	2238 586 59812	100nF 20% 50V 0603
2M73	2238 586 59812	100nF 20% 50V 0603
2M74	2238 586 59812	100nF 20% 50V 0603
2M75	2238 586 59812	100nF 20% 50V 0603
2M76	2020 552 96618	1nF 10% 50V 0402
2M77	2238 869 15101	100pF 5% 50V 0402
2M78	2238 586 59812	100nF 20% 50V 0603
2M80	2238 586 59812	100nF 20% 50V 0603
2M81	2238 586 59812	100nF 20% 50V 0603
2M82	2238 586 59812	100nF 20% 50V 0603
2M83	2238 869 15101	100pF 5% 50V 0402
2M85	2020 552 96628	10nF 10% 16V 0402
2M92	2238 869 15101	100pF 5% 50V 0402
2M93	2238 869 15101	100pF 5% 50V 0402
2M95	2238 869 15101	100pF 5% 50V 0402
2N00	4822 126 14324	33pF 5% 50V 0402
2N01	4822 126 14324	33pF 5% 50V 0402
2N02	2238 586 59812	100nF 20% 50V 0603
2N03	2238 586 59812	100nF 20% 50V 0603
2N04	2238 586 59812	100nF 20% 50V 0603
2N05	2238 586 59812	100nF 20% 50V 0603
2N06	2238 586 59812	100nF 20% 50V 0603
2N07	2238 586 59812	100nF 20% 50V 0603
2N08	2238 586 59812	100nF 20% 50V 0603
2N10	2238 586 59812	100nF 20% 50V 0603
2N11	2238 586 59812	100nF 20% 50V 0603
2N12	4822 124 23002	10µF 16V
2O00	4822 126 14519	22pF 5% 50V 0402
2O01	4822 126 14519	22pF 5% 50V 0402
2O02	2238 586 59812	100nF 20% 50V 0603
2O03	4822 124 23002	10µF 16V
2O04	2020 552 96618	1nF 10% 50V 0402
2O05	2020 552 96618	1nF 10% 50V 0402
2O06	2020 552 96618	1nF 10% 50V 0402
2O07	2020 552 96618	1nF 10% 50V 0402
2O10	2022 552 05679	1µF 10% 16V 0805
2O11	2238 586 59812	100nF 20% 50V 0603
2O12	2020 552 00141	4.7µF 10% 6.3V 0805
2O13	2238 586 59812	100nF 20% 50V 0603
2O14	2238 586 59812	100nF 20% 50V 0603
2O15	2238 586 59812	100nF 20% 50V 0603
2O16	2238 586 59812	100nF 20% 50V 0603
2O17	2020 552 00141	4.7µF 10% 6.3V 0805
2O18	2238 586 59812	100nF 20% 50V 0603
2O19	2238 586 59812	100nF 20% 50V 0603
2O20	2238 586 59812	100nF 20% 50V 0603
2O21	2238 586 59812	100nF 20% 50V 0603
2O22	2238 586 59812	100nF 20% 50V 0603
2O23	2238 586 59812	100nF 20% 50V 0603
2O24	2238 586 59812	100nF 20% 50V 0603
2O25	2238 586 59812	100nF 20% 50V 0603
2O26	2238 586 59812	100nF 20% 50V 0603
2O27	2238 586 59812	100nF 20% 50V 0603
2O28	2238 586 59812	100nF 20% 50V 0603
2P10	2238 869 15101	100pF 5% 50V 0402
2P13	2238 869 15101	100pF 5% 50V 0402
2P14	2238 869 15101	100pF 5% 50V 0402
2P17	2238 869 15101	100pF 5% 50V 0402
2P18	3198 035 03310	330pF 5% 50V 0402
2P19	4822 124 23002	10µF 16V
2P20	4822 124 23002	10µF 16V
2Q00	4822 124 81058	47µF 20% 4V
2Q02	4822 124 81058	47µF 20% 4V
2Q04	2238 586 59812	100nF 20% 50V 0603
2Q05	2238 586 59812	100nF 20% 50V 0603
2Q06	2238 586 59812	100nF 20% 50V 0603
2Q07	2238 586 59812	100nF 20% 50V 0603
2Q08	2238 586 59812	100nF 20% 50V 0603
2Q09	2238 586 59812	100nF 20% 50V 0603
2Q10	2238 586 59812	100nF 20% 50V 0603
2Q11	2238 586 59812	100nF 20% 50V 0603
2Q12	2238 586 59812	100nF 20% 50V 0603
2Q13	2238 586 59812	100nF 20% 50V 0603
2Q14	2238 586 59812	100nF 20% 50V 0603
2Q15	2238 586 59812	100nF 20% 50V 0603
2Q16	2238 586 59812	100nF 20% 50V 0603
2Q17	2020 552 96618	1nF 10% 50V 0402
2Q18	2238 586 59812	100nF 20% 50V 0603
2Q19	2238 586 59812	100nF 20% 50V 0603
2Q20	4822 124 81058	47µF 20% 4V
2Q21	2020 552 96618	1nF 10% 50V 0402
2Q22	4822 124 81058	47µF 20% 4V
2Q24	2238 586 59812	100nF 20% 50V 0603
2Q25	3198 034 01290	12pF 1% 50V 0402
2Q26	2238 586 59812	100nF 20% 50V 0603
2Q27	2238 586 59812	100nF 20% 50V 0603
2Q28	2238 586 59812	100nF 20% 50V 0603
2Q29	2238 869 15101	100pF 5% 50V 0402
2Q30	2238 586 59812	100nF 20% 50V 0603
2Q31	2238 587 15619	560pF 10% 50V 0402
2Q32	2238 586 59812	100nF 20% 50V 0603
2Q33	2238 586 59812	100nF 20% 50V 0603
2Q34	2238 586 59812	100nF 20% 50V 0603
2Q35	2238 586 59812	100nF 20% 50V 0603
2Q37	2238 586 59812	100nF 20% 50V 0603
2Q38	2238 586 59812	100nF 20% 50V 0603
2Q39	2238 586 59812	100nF 20% 50V 0603
2Q40	4822 124 81058	47µF 20% 4V
2Q41	2238 869 15101	100pF 5% 50V 0402
2Q42	4822 124 81058	47µF 20% 4V
2Q44	2238 586 59812	100nF 20% 50V 0603
2Q45	5322 126 11583	10nF 10% 50V 0603
2Q46	2238 586 59812	100nF 20% 50V 0603
2Q47	5322 126 11583	10nF 10% 50V 0603
2Q48	2238 586 59812	100nF 20% 50V 0603
2Q49	2238 586 59812	100nF 20% 50V 0603
2Q50	5322 126 11583	10nF 10% 50V 0603
2Q51	5322 126 11583	10nF 10% 50V 0603
2Q52	5322 126 11583	10nF 10% 50V 0603
2Q53	5322 126 11583	10nF 10% 50V 0603
2Q54	5322 126 11583	10nF 10% 50V 0603
2Q55	5322 126 11583	10nF 10% 50V 0603
2Q56	2238 586 59812	100nF 20% 50V 0603
2Q57	5322 126 11583	10nF 10% 50V 0603
2Q58	5322 126 11583	10nF 10% 50V 0603
2Q59	2238 586 59812	100nF 20% 50V 0603
2Q63	2238 586 59812	100nF 20% 50V 0603
2Q64	2238 586 59812	100nF 20% 50V 0603
2Q65	2238 586 59812	100nF 20% 50V 0603
2Q66	2238 586 59812	100nF 20% 50V 0603
2Q71	2020 552 96637	10µF 10% 6.3V 0805
2Q72	2020 552 96637	10µF 10% 6.3V 0805
2Q73	2020 552 96637	10µF 10% 6.3V 0805
2Q74	2020 552 96637	10µF 10% 6.3V 0805
2Q75	2020 552 96628	10nF 10% 16V 0402
2Q76	2020 552 96628	10nF 10% 16V 0402
2Q77	2020 552 96628	10nF 10% 16V 0402
2Q78	2020 552 96628	10nF 10% 16V 0402
2Q79	2020 552 96628	10nF 10% 16V 0402
2Q80	2020 552 96628	10nF 10% 16V 0402
2Q81	2020 552 96628	10nF 10% 16V 0402
2Q82	2020 552 96628	10nF 10% 16V 0402
2Q83	2020 552 96628	10nF 10% 16V 0402
2Q84	2020 552 96628	10nF 10% 16V 0402
2Q85	2020 552 96628	10nF 10% 16V 0402
2Q86	2020 552 96628	10nF 10% 16V 0402
2Q87	2020 552 96628	10nF 10% 16V 0402
2Q88	2020 552 96628	10nF 10% 16V 0402
2Q91	2238 586 59812	100nF 20% 50V 0603
2Q92	2020 552 96618	1nF 10% 50V 0402
2Q93	2238 869 15101	100pF 5% 50V 0402
2R00	2238 586 59812	100nF 20% 50V 0603
2R01	2238 787 15641	22nF 5% 16V 0402
2R02	2238 787 15641	22nF 5% 16V 0402
2R03	2238 787 15641	22nF 5% 16V 0402
2R04	2238 787 15641	22nF 5% 16V 0402
2R05	2238 787 15641	22nF 5% 16V 0402
2R06	2238 586 59812	100nF 20% 50V 0603
2R07	2238 787 15641	22nF 5% 16V 0402
2R08	2238 586 59812	100nF 20% 50V 0603
2R09	2238 787 15641	22nF 5% 16V 0402
2R10	2020 552 96618	1nF 10% 50V 0402
2R11	2022 552 05679	1µF 10% 16V 0805
2R12	2022 552 05679	1µF 10% 16V 0805
2R13	2238 869 15101	100pF 5% 50V 0402
2R14	2238 787 15641	22nF 5% 16V 0402
2R15	2022 552 05679	1µF 10% 16V 0805
2R16	2022 552 05679	1µF 10% 16V 0805
2R17	2238 586 59812	100nF 20% 50V 0603
2R18	2238 586 59812	100nF 20% 50V 0603
2R19	2238 586 59812	100nF 20% 50V 0603
2R20	2020 552 96618	1nF 10% 50V 0402
2R21	2020 552 96618	1nF 10% 50V 0402
2R23	2238 869 15101	100pF 5% 50V 0402
2R24	2022 552 05679	1µF 10% 16V 0805
2R25	2238 787 15641	22nF 5% 16V 0402
2R26	2238 586 59812	100nF 20% 50V 0603
2R27	2238 586 59812	100nF 20% 50V 0603
2R28	2020 552 96618	1nF 10% 50V 0402
2R29	2238 787 15641	22nF 5% 16V 0402
2R30	2020 552 96618	1nF 10% 50V 0402
2R31	2238 787 15641	22nF 5% 16V 0402
2R32	2238 586 59812	100nF 20% 50V 0603
2R33	2238 787 15641	22nF 5% 16V 0402
2R34	4822 124 81058	47µF 20% 4V
2R35	2238 787 15641	22nF 5% 16V 0402
2R36	2238 869 15101	100pF 5% 50V 0402
2R37	2238 586 59812	100nF 20% 50V 0603
2R38	2022 552 05679	1µF 10% 16V 0805
2R40	2022 552 05679	1µF 10% 16V 0805
2R41	2238 787 15641	22nF 5% 16V 0402
2R42	2020 552 96618	1nF 10% 50V 0402
2R43	2238 586 59812	100nF 20% 50V 0603
2R44	2022 552 05679	1µF 10% 16V 0805
2R46	4822 124 81058	47µF 20% 4V
2R47	2020 552 96618	1nF 10% 50V 0402
2R48	2020 552 96618	1nF 10% 50V 0402
2R49	2020 552 96618	1nF 10% 50V 0402
2R50	2020 552 96618	1nF 10% 50V 0402
2R51	2020 552 96618	1nF 10% 50V 0402
2R52	2020 552 96618	1nF 10% 50V 0402
2R53	2022 552 05679	1µF 10% 16V 0805
2R54	2020 552 96618	1nF 10% 50V 0402
2R55	2020 552 96618	1nF 10% 50V 0402
2R56	2238 869 15101	100pF 5% 50V 0402
2R57	2020 552 96618	1nF 10% 50V 0402
2R58	2238 787 15641	22nF 5% 16V 0402
2R59	2238 787 15641	22nF 5% 16V 0402
2R60	2020 552 96618	1nF 10% 50V 0402
2R61	2022 552 05679	1µF 10% 16V 0805
2R62	2020 552 96618	1nF 10% 50V 0402
2R63	2020 552 96618	1nF 10% 50V 0402
2R64	2238 787 15641	22nF 5% 16V 0402
2R65	2020 552 96618	1nF 10% 50V 0402
2R66	2020 552 96618	1nF 10% 50V 0402
2R67	2238 586 59812	100nF 20% 50V 0603
2R68	2238 787 15641	22nF 5% 16V 0402
2R69	2238 787 15641	22nF 5% 16V 0402
2R70	2238 787 15641	22nF 5% 16V 0402
2R71	2020 552 96618	1nF 10% 50V 0402
2R72	2020 552 96618	1nF 10% 50V 0402
2R73	2020 552 96618	1nF 10% 50V 0402
2R74	2238 787 15641	22nF 5% 16V 0402
2R75	4822 124 81058	47µF 20% 4V
2R76	2238 787 15641	22nF 5% 16V 0402
2R77	2022 552 05679	1µF 10% 16V 0805
2R78	2238 787 15641	22nF 5% 16V 0402
2R79	2238 787 15641	22nF 5% 16V 0402
2R80	2238 586 59812	100nF 20% 50V 0603
2R81	2022 552 05679	1µF 10% 16V 0805
2R82	2238 787 15641	22nF 5% 16V 0402
2R83	2238 586 59812	100nF 20% 50V 0603
2R84	2238 787 15641	22nF 5% 16V 0402
2R86	2238 787 15641	22nF 5% 16V 0402
2R87	2238 787 15641	22nF 5% 16V 0402
2R88	2238 787 15641	22nF 5% 16V 0402
2R89	2238 869 15101	100pF 5% 50V 0402
2R90	2238 787 15641	22nF 5% 16V 0402
2R91	2238 586 59812	100nF 20% 50V 0603
2R92	2238 787 15641	22nF 5% 16V 0402
2R93	2238 869 15101	100pF 5% 50V 0402
2R94	2238 586 59812	100nF 20% 50V 0603
2R95	2238 787 15641	22nF 5% 16V 0402
2R96	2238 586 59812	100nF 20% 50V 0603
2R97	2238 787 15641	22nF 5% 16V 0402
2R98	2238 787 15641	22nF 5% 16V 0402
2R99	2238 586 59812	100nF 20% 50V 0603
2RA1	2020 552 96618	1nF 10% 50V 0402
2RA2	4822 124 81058	47µF 20% 4V
2RA3	2020 552 96618	1nF 10% 50V 0402
2RA4	2238 869 15101	100pF 5% 50V 0402
2RA5	2020 552 96618	1nF 10% 50V 0402
2RA6	2022 552 05679	1µF 10% 16V 0805
2RA7	2022 552 05679	1µF 10% 16V 0805
2RA8	2022 552 05679	1µF 10% 16V 0805

2RA9	2020 552 96618	1nF 10% 50V 0402
2RB2	2022 552 05679	1µF 10% 16V 0805
2RB3	2020 552 96618	1nF 10% 50V 0402
2RB5	2022 552 05679	1µF 10% 16V 0805
2RB6	2022 552 05679	1µF 10% 16V 0805
2S10	2022 552 05679	1µF 10% 16V 0805
2S42	4822 124 12095	100µF 20% 16V
2S43	4822 124 80151	47µF 16V
2S44	4822 124 12095	100µF 20% 16V
2S45	4822 124 80151	47µF 16V
2T01	3198 017 34730	47nF 16V 0603
2T02	3198 035 71040	100nF 10% 16V 0402
2T03	2238 586 59812	100nF 20% 50V 0603
2T04	2238 586 59812	100nF 20% 50V 0603
2T05	3198 017 34730	47nF 16V 0603
2T06	2238 586 59812	100nF 20% 50V 0603
2T10	3198 034 04790	27pF 1% 50V 0402
2T12	2020 552 96628	10nF 10% 16V 0402
2T13	3198 034 04790	27pF 1% 50V 0402
2T18	2020 004 90283	10µF 20% 10V 1206
2T20	4822 124 80151	47µF 16V
2T21	2020 552 96628	10nF 10% 16V 0402
2T22	2238 586 59812	100nF 20% 50V 0603
2T23	2020 552 96628	10nF 10% 16V 0402
2T25	3198 035 71040	100nF 10% 16V 0402
2T26	3198 035 71040	100nF 10% 16V 0402
2T27	3198 035 71040	100nF 10% 16V 0402
2U01	2020 552 96618	1nF 10% 50V 0402
2U02	2238 586 59812	100nF 20% 50V 0603
2U03	2238 586 59812	100nF 20% 50V 0603
2U04	2238 586 59812	100nF 20% 50V 0603
2U05	2020 552 96618	1nF 10% 50V 0402
2U06	2238 586 59812	100nF 20% 50V 0603
2U07	2238 586 59812	100nF 20% 50V 0603
2U08	3198 035 04710	470pF 50V 0402
2U09	2238 586 59812	100nF 20% 50V 0603
2U10	2020 552 96618	1nF 10% 50V 0402
2U11	2238 586 59812	100nF 20% 50V 0603
2U12	2238 586 59812	100nF 20% 50V 0603
2U13	3198 035 04710	470pF 50V 0402
2U14	2020 552 96618	1nF 10% 50V 0402
2U15	2238 586 59812	100nF 20% 50V 0603
2U16	2020 552 96618	1nF 10% 50V 0402
2U17	2238 586 59812	100nF 20% 50V 0603
2U18	2238 586 59812	100nF 20% 50V 0603
2U19	2238 586 59812	100nF 20% 50V 0603
2U20	2238 586 59812	100nF 20% 50V 0603
2U21	2238 586 59812	100nF 20% 50V 0603
2U25	2020 552 96628	10nF 10% 16V 0402
2U26	2020 552 96628	10nF 10% 16V 0402
2U27	2020 552 96628	10nF 10% 16V 0402
2U28	2238 586 59812	100nF 20% 50V 0603
2U29	2020 552 96618	1nF 10% 50V 0402
2U30	3198 035 04710	470pF 50V 0402
2U31	2022 552 05635	22µF 10% 16V
2U32	2022 552 05635	22µF 10% 16V
2U33	2022 552 05635	22µF 10% 16V
2U34	2022 552 05635	22µF 10% 16V
2U35	2022 552 05635	22µF 10% 16V
2U36	2022 552 05635	22µF 10% 16V
2U37	2022 552 05635	22µF 10% 16V
2U38	2022 552 05635	22µF 10% 16V
2U39	2022 552 05635	22µF 10% 16V
2U40	2022 552 05679	1µF 10% 16V 0805
2U41	2022 552 05679	1µF 10% 16V 0805
2U43	2020 552 96628	10nF 10% 16V 0402
2U44	2020 552 96628	10nF 10% 16V 0402
2U45	2020 552 96628	10nF 10% 16V 0402
2U46	2238 586 59812	100nF 20% 50V 0603
2U50	2022 552 05679	1µF 10% 16V 0805
2U51	2022 552 05679	1µF 10% 16V 0805
2U52	2238 787 15641	22nF 5% 16V 0402
2U53	2238 787 15641	22nF 5% 16V 0402
2U54	2020 552 96623	2.2nF 10% 50V 0402
2U55	2020 552 96628	10nF 10% 16V 0402
2U56	2020 552 96628	10nF 10% 16V 0402
2U57	2020 552 96628	10nF 10% 16V 0402
2U58	2022 552 05679	1µF 10% 16V 0805
2U59	5322 124 41945	22µF 20% 35V
2U60	5322 124 41945	22µF 20% 35V
2U61	5322 124 41945	22µF 20% 35V
2U65	2020 552 96618	1nF 10% 50V 0402
2U72	2020 552 96618	1nF 10% 50V 0402
2U73	2020 552 96618	1nF 10% 50V 0402
2U74	2020 552 96618	1nF 10% 50V 0402
2U75	2020 552 96618	1nF 10% 50V 0402
2U76	2020 552 96618	1nF 10% 50V 0402
2U77	2020 552 96618	1nF 10% 50V 0402
2U78	2020 552 96618	1nF 10% 50V 0402
2U85	2020 552 96623	2.2nF 10% 50V 0402
2U86	2020 552 96623	2.2nF 10% 50V 0402
2U87	2020 552 96623	2.2nF 10% 50V 0402
2U91	2020 552 96684	470nF 10% 25V 0805
2UB1	2238 586 59812	100nF 20% 50V 0603
2V00	2020 552 96618	1nF 10% 50V 0402
2V01	2020 552 96618	1nF 10% 50V 0402
2V02	2020 552 96618	1nF 10% 50V 0402
2V03	2238 586 59812	100nF 20% 50V 0603
2V05	4822 124 81058	47µF 20% 4V
2V06	4822 124 81058	47µF 20% 4V
2V07	2020 552 96628	10nF 10% 16V 0402
2V08	2020 552 96637	10µF 10% 6.3V 0805
2V13	2238 586 59812	100nF 20% 50V 0603
2V14	2020 552 96628	10nF 10% 16V 0402
2V15	2020 552 96637	10µF 10% 6.3V 0805
2V16	2238 586 59812	100nF 20% 50V 0603
2V17	2238 586 59812	100nF 20% 50V 0603
2V18	2238 586 59812	100nF 20% 50V 0603
2V19	2238 586 59812	100nF 20% 50V 0603
2V20	2238 586 59812	100nF 20% 50V 0603
2V21	2238 586 59812	100nF 20% 50V 0603
2V22	2238 586 59812	100nF 20% 50V 0603
2V23	2238 586 59812	100nF 20% 50V 0603
2V24	2238 586 59812	100nF 20% 50V 0603
2V25	2238 586 59812	100nF 20% 50V 0603
2V26	2238 586 59812	100nF 20% 50V 0603
2V27	2238 586 59812	100nF 20% 50V 0603
2V28	2238 586 59812	100nF 20% 50V 0603
2V29	2238 586 59812	100nF 20% 50V 0603
2V30	2238 586 59812	100nF 20% 50V 0603
2V31	2238 586 59812	100nF 20% 50V 0603
2V32	2238 586 59812	100nF 20% 50V 0603
2V33	2020 552 96618	1nF 10% 50V 0402
2V34	2238 869 15101	100pF 5% 50V 0402
2V35	2020 552 96637	10µF 10% 6.3V 0805
2V36	2020 552 96637	10µF 10% 6.3V 0805
2V37	2020 552 96637	10µF 10% 6.3V 0805
2V38	2020 552 96637	10µF 10% 6.3V 0805
2V40	2020 552 96628	10nF 10% 16V 0402
2V41	2020 552 96628	10nF 10% 16V 0402
2V42	2020 552 96628	10nF 10% 16V 0402
2V43	2020 552 96628	10nF 10% 16V 0402
2V44	2020 552 96628	10nF 10% 16V 0402
2V45	2020 552 96628	10nF 10% 16V 0402
2V46	2020 552 96628	10nF 10% 16V 0402
2V47	2020 552 96628	10nF 10% 16V 0402
2V48	2020 552 96628	10nF 10% 16V 0402
2V49	2020 552 96628	10nF 10% 16V 0402
2V50	2020 552 96628	10nF 10% 16V 0402
2V51	2020 552 96628	10nF 10% 16V 0402
2W03	3198 035 71040	100nF 10% 16V 0402
2W06	2238 586 59812	100nF 20% 50V 0603
2W07	3198 017 34730	47nF 16V 0603
2W08	2238 586 59812	100nF 20% 50V 0603
2W15	3198 034 04790	27pF 1% 50V 0402
2W16	3198 034 04790	27pF 1% 50V 0402
2W17	2020 552 96628	10nF 10% 16V 0402
2W18	2020 552 96628	10nF 10% 16V 0402
2W19	2238 586 59812	100nF 20% 50V 0603
2W20	3198 035 71040	100nF 10% 16V 0402
2W21	3198 035 71040	100nF 10% 16V 0402
2W23	4822 124 80151	47µF 16V
2W24	3198 035 71040	100nF 10% 16V 0402
2Y38	2022 552 05679	1µF 10% 16V 0805
2Y39	2022 552 05679	1µF 10% 16V 0805
2Y40	2238 586 59812	100nF 20% 50V 0603
2Y41	2238 586 59812	100nF 20% 50V 0603
2Y42	4822 124 80151	47µF 16V
2Y43	2238 586 59812	100nF 20% 50V 0603
2Y45	2238 586 59812	100nF 20% 50V 0603

-WW-

3A00	3198 031 02710	270Ω 5% 0.1W 0402
3A01	3198 031 06810	680Ω 5% 0.01W 0402
3A02	4822 117 13545	100Ω 1% 0402
3A05	3198 031 01810	180Ω 5% 0402
3A06	3198 031 02710	270Ω 5% 0.1W 0402
3A07	4822 051 30331	330Ω 5% 0.062W
3A10	3198 031 04730	47Ω 5% 0402
3A11	3198 031 01830	18kΩ 5% 0.01W 0402
3A12	3198 031 04730	47Ω 5% 0402
3A13	3198 031 04730	47Ω 5% 0402
3A14	3198 031 01830	18kΩ 5% 0.01W 0402
3A15	4822 117 13601	22kΩ 5% 0402
3A17	3198 031 02240	220kΩ 5% 0.1W 0402
3A19	3198 031 02240	220kΩ 5% 0.1W 0402
3A20	4822 117 13603	33kΩ 5% 0402
3A21	3198 031 02730	27kΩ 5% 0402
3A22	4822 117 13603	33kΩ 5% 0402
3A23	3198 031 02730	27kΩ 5% 0402
3A24	3198 031 02240	220kΩ 5% 0.1W 0402
3A25	3198 031 02240	220kΩ 5% 0.1W 0402
3A26	3198 031 02240	220kΩ 5% 0.1W 0402
3A27	3198 031 02240	220kΩ 5% 0.1W 0402
3A31▲	5322 117 11726	10Ω 5%
3A38	3198 031 04730	47Ω 5% 0402
3A39	4822 117 13545	100Ω 1% 0402
3A40	4822 117 13545	100Ω 1% 0402
3A42	4822 117 13548	1kΩ 5% 0402
3A45	4822 117 13548	1kΩ 5% 0402
3A46	4822 117 13548	1kΩ 5% 0402
3A50	3198 031 04720	4.7kΩ 5% 0402
3A51▲	4822 117 11748	Fuse 2.2Ω 5% 1206
3A53	3198 031 03910	390Ω 1% 0402
3A56	3198 031 06820	6.8kΩ 5% 0.01W 0402
3A57	4822 117 13602	2.2kΩ 5% 0.01W 0402
3A60	3198 031 02730	27kΩ 5% 0402
3A63	4822 117 13545	100Ω 1% 0402
3A65	3198 031 04720	4.7kΩ 5% 0402
3A67	3198 031 04720	4.7kΩ 5% 0402
3A80	4822 117 13545	100Ω 1% 0402
3B00	3198 031 04720	4.7kΩ 5% 0402
3B01	3198 031 04720	4.7kΩ 5% 0402
3B02	4822 117 13545	100Ω 1% 0402
3B03	4822 117 13545	100Ω 1% 0402
3B04	4822 117 13606	10kΩ 5% 0.01W 0402
3B05	3198 031 04730	47Ω 5% 0402
3B06	3198 031 04730	47Ω 5% 0402
3B07	4822 117 13545	100Ω 1% 0402
3B08	4822 117 13545	100Ω 1% 0402
3B09	2120 550 00054	VDR 90V 1mA 0402
3B10	2120 550 00054	VDR 90V 1mA 0402
3B11	2120 550 00054	VDR 90V 1mA 0402
3B12	3198 031 04720	4.7kΩ 5% 0402
3B13	3198 031 04720	4.7kΩ 5% 0402
3B14	4822 117 13545	100Ω 1% 0402
3B15	4822 117 13545	100Ω 1% 0402
3B16	4822 117 13606	10kΩ 5% 0.01W 0402
3B17	3198 031 04730	47Ω 5% 0402
3B18	3198 031 04730	47Ω 5% 0402
3B19	4822 117 13545	100Ω 1% 0402
3B20	4822 117 13545	100Ω 1% 0402
3B21	2120 550 00054	VDR 90V 1mA 0402
3B22	2120 550 00054	VDR 90V 1mA 0402
3B23	4822 117 13548	1kΩ 5% 0402
3B24	4822 117 13548	1kΩ 5% 0402
3B27	4822 117 13602	2.2kΩ 5% 0.01W 0402
3B28	4822 117 13602	2.2kΩ 5% 0.01W 0402
3B29	3198 031 03390	33Ω 1% 0402
3B30	2322 705 70399	39Ω 5% 0402
3B31	4822 117 13606	10kΩ 5% 0.01W 0402
3B32	2322 705 70399	39Ω 5% 0402
3B33	4822 117 13606	10kΩ 5% 0.01W 0402
3B34	2322 705 70399	39Ω 5% 0402
3B35	4822 117 13543	470Ω 5% 0402
3B36	3198 031 01230	12kΩ 5% 0402
3B37	4822 117 13548	1kΩ 5% 0402
3B38	4822 117 13548	1kΩ 5% 0402
3B39	4822 117 13545	100Ω 1% 0402
3B40	4822 117 13548	1kΩ 5% 0402
3B41	4822 117 13545	100Ω 1% 0402
3B42	4822 117 13545	100Ω 1% 0402
3B43	4822 117 13606	10kΩ 5% 0.01W 0402
3B44	4822 117 13543	470Ω 5% 0402
3B45	4822 117 13543	470Ω 5% 0402
3B46	3198 031 06890	68Ω 5% 0402
3B48	2120 550 00054	VDR 90V 1mA 0402
3B49	2120 550 00054	VDR 90V 1mA 0402
3B50	2350 033 11339	4 x 33Ω 5%
3B51	2350 033 11339	4 x 33Ω 5%
3B52	2350 033 11339	4 x 33Ω 5%
3B53	2350 033 11339	4 x 33Ω 5%
3B54	2120 550 00054	VDR 90V 1mA 0402
3B55	2120 550 00054	VDR 90V 1mA 0402
3B56	2120 550 00054	VDR 90V 1mA 0402
3B57	2120 550 00054	VDR 90V 1mA 0402
3B58	2120 550 00054	VDR 90V 1mA 0402
3B59	2120 550 00054	VDR 90V 1mA 0402
3B60	2120 550 00054	VDR 90V 1mA 0402
3B61	2120 550 00054	VDR 90V 1mA 0402
3B62	2120 550 00054	VDR 90V 1mA 0402
3B63	4822 117 13545	100Ω 1% 0402
3B64	3198 031 04720	4.7kΩ 5% 0402
3B65	4822 117 13545	100Ω 1% 0402
3B66	3198 031 04720	4.7kΩ 5% 0402
3B67	4822 117 13605	Jumper 0402
3B68	4822 051 30759	75Ω 5% 0.062W
3B69	4822 117 13605	Jumper 0402
3B70	4822 051 30759	75Ω 5% 0.062W
3B71	4822 117 13605	Jumper 0402
3B72	4822 051 30759	75Ω 5% 0.062W
3B73	2350 033 11339	4 x 33Ω 5%
3B74	4822 117 13548	1kΩ 5% 0402
3B75	2350 033 11339	4 x 33Ω 5%
3B76	4822 117 13605	Jumper 0402
3B78	4822 117 13543	470Ω 5% 0402
3B80	4822 117 13543	470Ω 5% 0402
3B82	4822 117 13543	470Ω 5% 0402
3B83	4822 117 13548	1kΩ 5% 0402
3B84	4822 117 13548	1kΩ 5% 0402

3B85	4822 117 13605	Jumper 0402
3B86	4822 117 13548	1kΩ 5% 0402
3B87	4822 117 13605	Jumper 0402
3B88	4822 117 13548	1kΩ 5% 0402
3B89	4822 117 13548	1kΩ 5% 0402
3B90	3198 031 02290	22Ω 5% 0.1W 0402
3B91	4822 117 11297	100kΩ 5% 0.1W
3B92	3198 031 02290	22Ω 5% 0.1W 0402
3B93	4822 117 11297	100kΩ 5% 0.1W
3B95	3198 031 03390	33Ω 1% 0402
3B96	3198 031 03390	33Ω 1% 0402
3B97	3198 031 03390	33Ω 1% 0402
3C00	3198 031 02710	270Ω 5% 0.1W 0402
3C01	3198 031 06810	680Ω 5% 0.01W 0402
3C02	4822 117 13545	100Ω 1% 0402
3C05	3198 031 01810	180Ω 5% 0402
3C06	3198 031 02710	270Ω 5% 0.1W 0402
3C31▲	5322 117 11726	10Ω 5%
3C32	3198 031 01220	1.2kΩ 5% 0.01W 0402
3C33	3198 031 08210	820Ω 5% 0.5W
3C34	3198 031 01220	1.2kΩ 5% 0.01W 0402
3C39	4822 117 13545	100Ω 1% 0402
3C40	4822 117 13545	100Ω 1% 0402
3C43	3198 031 01820	1.8kΩ 5% 0.01W 0402
3C44	3198 031 01220	1.2kΩ 5% 0.01W 0402
3C45	3198 031 04730	47Ω 5% 0402
3C50	3198 031 04720	4.7kΩ 5% 0402
3C51▲	4822 117 11748	Fuse 2.2Ω 5% 1206
3C52	4822 051 30331	330Ω 5% 0.062W
3C53	3198 031 03910	390Ω 1% 0402
3C56	3198 031 06820	6.8kΩ 5% 0.01W 0402
3C57	4822 117 13602	2.2kΩ 5% 0.01W 0402
3C60	3198 031 02730	27kΩ 5% 0402
3C63	4822 117 13545	100Ω 1% 0402
3C65	3198 031 04720	4.7kΩ 5% 0402
3C67	3198 031 04720	4.7kΩ 5% 0402
3C80	4822 117 13545	100Ω 1% 0402
3E01	4822 117 13545	100Ω 1% 0402
3E02	4822 117 13545	100Ω 1% 0402
3E03	4822 117 13545	100Ω 1% 0402
3E04	4822 117 13545	100Ω 1% 0402
3E05	4822 117 13545	100Ω 1% 0402
3E06	4822 117 13545	100Ω 1% 0402
3E07	3198 031 08220	8.2kΩ 5% 0.5W
3E08	3198 031 01820	1.8kΩ 5% 0.01W 0402
3E12	4822 117 13545	100Ω 1% 0402
3E13	4822 117 13545	100Ω 1% 0402
3E14	4822 117 13606	10kΩ 5% 0.01W 0402
3E15	4822 117 13596	220Ω 5% 0.01W 0402
3E16	3198 031 02720	2.7kΩ 5% 0.01W 0402
3E17	4822 117 13545	100Ω 1% 0402
3E18	4822 117 13548	1kΩ 5% 0402
3E19	2322 706 71002	1kΩ 1% 0402
3E20	4822 117 13548	1kΩ 5% 0402
3E30	4822 117 13545	100Ω 1% 0402
3E31	4822 117 13545	100Ω 1% 0402
3F01	3198 031 04720	4.7kΩ 5% 0402
3F02	2322 705 70184	180Ω 5% 0402
3F03	3198 031 06830	68kΩ 5% 0.01W 0402
3F04	4822 117 13601	22kΩ 5% 0402
3F05	3198 031 06830	68kΩ 5% 0.01W 0402
3F06	4822 117 13606	10kΩ 5% 0.01W 0402
3F09	4822 117 13601	22kΩ 5% 0402
3F10	4822 117 11297	100kΩ 5% 0.1W
3F11	3198 031 06830	68kΩ 5% 0.01W 0402
3F12	3198 031 04730	47Ω 5% 0402
3F13	4822 117 11297	100kΩ 5% 0.1W
3F14	4822 117 13606	10kΩ 5% 0.01W 0402
3F15	3198 031 04730	47Ω 5% 0402
3F16	3198 031 01090	10Ω 5% 0.01W 0402
3F17	3198 031 06830	68kΩ 5% 0.01W 0402
3F18	4822 117 13602	2.2kΩ 5% 0.01W 0402
3F19	4822 117 13602	2.2kΩ 5% 0.01W 0402
3F20	4822 117 13606	10kΩ 5% 0.01W 0402
3F21	4822 117 13545	100Ω 1% 0402
3F22	3198 031 06830	68kΩ 5% 0.01W 0402
3F23	4822 117 13601	22kΩ 5% 0402
3F24	4822 117 13601	22kΩ 5% 0402
3F25	3198 031 04720	4.7kΩ 5% 0402
3F26	3198 031 04720	4.7kΩ 5% 0402
3F27	4822 117 10353	150Ω 1% 0.1W
3F28	4822 117 13545	100Ω 1% 0402
3F29	4822 117 13545	100Ω 1% 0402
3F30	3198 031 03390	33Ω 1% 0402
3F31	3198 031 03390	33Ω 1% 0402
3F32	3198 031 03390	33Ω 1% 0402
3F33	3198 031 03390	33Ω 1% 0402
3F34	3198 031 03390	33Ω 1% 0402
3F35	3198 031 08230	82kΩ 5% 0402
3F36	4822 117 13545	100Ω 1% 0402
3F37	4822 117 13545	100Ω 1% 0402
3F38	3198 031 03390	33Ω 1% 0402
3F39	4822 117 13606	10kΩ 5% 0.01W 0402
3F40	4822 117 13602	2.2kΩ 5% 0.01W 0402
3F41	4822 117 13606	10kΩ 5% 0.01W 0402
3F42	3198 031 04720	4.7kΩ 5% 0402
3F43	3198 031 04720	4.7kΩ 5% 0402
3F44	4822 117 13606	10kΩ 5% 0.01W 0402
3F45	3198 031 04730	47Ω 5% 0402
3F46	4822 117 13548	1kΩ 5% 0402
3F47	4822 117 13597	330Ω 5% 0.01W 0402
3F48	3198 031 03390	33Ω 1% 0402
3F49	4822 117 11297	100kΩ 5% 0.1W
3F50	3198 031 01090	10Ω 5% 0.01W 0402
3F51	4822 117 11297	100kΩ 5% 0.1W
3F52	4822 117 13606	10kΩ 5% 0.01W 0402
3F54	4822 117 13545	100Ω 1% 0402
3F55	4822 117 13548	1kΩ 5% 0402
3F57	4822 117 11297	100kΩ 5% 0.1W
3F60	4822 117 13548	1kΩ 5% 0402
3F64	4822 117 13601	22kΩ 5% 0402
3F65	3198 031 06830	68kΩ 5% 0.01W 0402
3F66	3198 031 08220	8.2kΩ 5% 0.5W
3F67	4822 117 13606	10kΩ 5% 0.01W 0402
3F68	4822 117 13606	10kΩ 5% 0.01W 0402
3F70	4822 117 13597	330Ω 5% 0.01W 0402
3F71	4822 117 13606	10kΩ 5% 0.01W 0402
3F72	3198 031 04720	4.7kΩ 5% 0402
3F73	3198 031 04720	4.7kΩ 5% 0402
3F76	4822 117 13545	100Ω 1% 0402
3F77	4822 117 13545	100Ω 1% 0402
3F78	4822 117 13545	100Ω 1% 0402
3F79	4822 117 13545	100Ω 1% 0402
3F82	4822 117 13545	100Ω 1% 0402
3F85	4822 117 13606	10kΩ 5% 0.01W 0402
3F86	4822 117 13545	100Ω 1% 0402
3F88	4822 117 13545	100Ω 1% 0402
3F90	4822 117 13545	100Ω 1% 0402
3FA0	4822 117 13602	2.2kΩ 5% 0.01W 0402
3FA1	4822 117 13606	10kΩ 5% 0.01W 0402
3FA2	3198 031 01220	1.2kΩ 5% 0.01W 0402
3FA3	4822 117 10353	150Ω 1% 0.1W
3FA4	4822 117 10353	150Ω 1% 0.1W
3FA5	4822 117 13548	1kΩ 5% 0402
3FA6	4822 117 13548	1kΩ 5% 0402
3FA7	4822 117 13548	1kΩ 5% 0402
3FA8	3198 031 01520	1.2kΩ 5% 0.01W 0402
3FA9	4822 117 13548	1kΩ 5% 0402
3FB1	4822 117 10353	150Ω 1% 0.1W
3FB2	4822 117 10353	150Ω 1% 0.1W
3FB3	3198 031 01090	10Ω 5% 0.01W 0402
3FB4	2322 705 70184	180Ω 5% 0402
3FB5	3198 031 03340	330kΩ 5% 0402
3FB6	2322 705 70564	560kΩ 5% 0402
3G00	4822 117 13548	1kΩ 5% 0402
3G01	4822 117 13545	100Ω 1% 0402
3G02	4822 117 13545	100Ω 1% 0402
3G03	4822 117 13606	10kΩ 5% 0.01W 0402
3G04	4822 117 11297	100kΩ 5% 0.1W
3G05	4822 117 13603	33kΩ 5% 0402
3G06	4822 117 13548	1kΩ 5% 0402
3G07	4822 117 13606	10kΩ 5% 0.01W 0402
3G08	4822 117 13606	10kΩ 5% 0.01W 0402
3G09	4822 117 13606	10kΩ 5% 0.01W 0402
3G10	4822 117 13606	10kΩ 5% 0.01W 0402
3G11	4822 117 13606	10kΩ 5% 0.01W 0402
3G13	4822 117 13606	10kΩ 5% 0.01W 0402
3G14	4822 117 13546	47Ω 5% 0402
3G15	4822 117 13546	47Ω 5% 0402
3G16	4822 117 13546	47Ω 5% 0402
3G17	4822 117 13546	47Ω 5% 0402
3G20	4822 117 13548	1kΩ 5% 0402
3G21	4822 117 13548	1kΩ 5% 0402
3G22	4822 117 13545	100Ω 1% 0402
3G23	4822 117 13545	100Ω 1% 0402
3G24	4822 117 13545	100Ω 1% 0402
3G25	4822 117 13545	100Ω 1% 0402
3G27	4822 117 13545	100Ω 1% 0402
3G34	3198 031 04720	4.7kΩ 5% 0402
3G40	3198 031 01810	180Ω 5% 0402
3G41	3198 031 01510	150Ω 5% 0.01W 0402
3G42	3198 031 01810	180Ω 5% 0402
3G43	3198 031 01810	180Ω 5% 0402
3G44	3198 031 01510	150Ω 5% 0.01W 0402
3G45	3198 031 01810	180Ω 5% 0402
3G46	3198 031 01810	180Ω 5% 0402
3G47	3198 031 01510	150Ω 5% 0.01W 0402
3G48	3198 031 01810	180Ω 5% 0402
3G49	3198 031 01810	180Ω 5% 0402
3G50	3198 031 01510	150Ω 5% 0.01W 0402
3G51	3198 031 01810	180Ω 5% 0402
3G55	3198 031 01810	180Ω 5% 0402
3G56	3198 031 01510	150Ω 5% 0.01W 0402
3G57	3198 031 01810	180Ω 5% 0402
3G58	3198 031 01810	180Ω 5% 0402
3G59	3198 031 01510	150Ω 5% 0.01W 0402
3G60	3198 031 01810	180Ω 5% 0402
3G61	3198 031 01810	180Ω 5% 0402
3G62	3198 031 01510	150Ω 5% 0.01W 0402
3G63	3198 031 01810	180Ω 5% 0402
3G64	3198 031 01810	180Ω 5% 0402
3G65	3198 031 01510	150Ω 5% 0.01W 0402
3G68	3198 031 04720	4.7kΩ 5% 0402
3G69	3198 031 04720	4.7kΩ 5% 0402
3G76	3198 031 01810	180Ω 5% 0402
3G80	4822 117 13606	10kΩ 5% 0.01W 0402
3G81	4822 117 13606	10kΩ 5% 0.01W 0402
3G82	3198 031 04720	4.7kΩ 5% 0402
3G83	3198 031 04720	4.7kΩ 5% 0402
3G84	3198 031 01810	180Ω 5% 0402
3G85	3198 031 01510	150Ω 5% 0.01W 0402
3G86	3198 031 01810	180Ω 5% 0402
3G87	3198 031 01810	180Ω 5% 0402
3G88	3198 031 01510	150Ω 5% 0.01W 0402
3G89	3198 031 01810	180Ω 5% 0402
3GA0	4822 117 13548	1kΩ 5% 0402
3GA1	3198 031 04730	47Ω 5% 0402
3GA2	4822 117 13546	47Ω 5% 0402
3GA3	3198 031 04730	47Ω 5% 0402
3GA4	4822 117 13606	10kΩ 5% 0.01W 0402
3GA5	4822 117 13606	10kΩ 5% 0.01W 0402
3GB3	4822 117 13545	100Ω 1% 0402
3H00	4822 117 13606	10kΩ 5% 0.01W 0402
3H01	4822 117 13606	10kΩ 5% 0.01W 0402
3H02	4822 117 13596	220Ω 5% 0.01W 0402
3H03	3198 031 04720	4.7kΩ 5% 0402
3H04	4822 117 13545	100Ω 1% 0402
3H05	4822 117 13545	100Ω 1% 0402
3H07	3198 031 03390	33Ω 1% 0402
3H08	3198 031 04720	4.7kΩ 5% 0402
3H09	4822 117 13606	10kΩ 5% 0.01W 0402
3H10	4822 117 13606	10kΩ 5% 0.01W 0402
3H11	4822 117 13606	10kΩ 5% 0.01W 0402
3H13	4822 117 13606	10kΩ 5% 0.01W 0402
3H14	2350 033 11103	4x 10kΩ 5% Netw.
3H15	4822 117 13606	10kΩ 5% 0.01W 0402
3H16	4822 117 13606	10kΩ 5% 0.01W 0402
3H17	2350 033 11103	4x 10kΩ 5% Netw.
3H18	4822 117 13606	10kΩ 5% 0.01W 0402
3H19	4822 117 13548	1kΩ 5% 0402
3H20	2322 705 70399	39Ω 5% 0402
3H21	2322 705 70399	39Ω 5% 0402
3H22	3198 031 06890	68Ω 5% 0402
3H28	4822 117 13606	10kΩ 5% 0.01W 0402
3H29	4822 117 13606	10kΩ 5% 0.01W 0402
3H31	4822 117 13606	10kΩ 5% 0.01W 0402
3H32	4822 117 13606	10kΩ 5% 0.01W 0402
3H33	4822 117 13545	100Ω 1% 0402
3H34	2350 033 11689	4x 68Ω 5% Netw.
3H35	2350 033 11689	4x 68Ω 5% Netw.
3H36	2350 033 11689	4x 68Ω 5% Netw.
3H37	2350 033 11689	4x 68Ω 5% Netw.
3H38	2350 033 11689	4x 68Ω 5% Netw.
3H39	2350 033 11689	4x 68Ω 5% Netw.
3H40	2350 033 11689	4x 68Ω 5% Netw.
3H41	2350 033 11689	4x 68Ω 5% Netw.
3H42	3198 031 06890	68Ω 5% 0402
3H44	4822 117 13545	100Ω 1% 0402
3H50	4822 117 13606	10kΩ 5% 0.01W 0402
3H51	4822 117 13606	10kΩ 5% 0.01W 0402
3H65	2350 033 10101	4 x 100Ω 5%
3H67	4822 117 13606	10kΩ 5% 0.01W 0402
3H69	4822 117 13606	10kΩ 5% 0.01W 0402
3H70	4822 117 13606	10kΩ 5% 0.01W 0402
3H71	4822 117 13606	10kΩ 5% 0.01W 0402
3H72	4822 117 13545	100Ω 1% 0402
3H73	3198 031 03390	33Ω 1% 0402
3H74	4822 117 13546	47Ω 5% 0402
3H75	4822 117 13545	100Ω 1% 0402
3H79	3198 031 02290	22Ω 5% 0.1W 0402
3H82	3198 031 01050	1MΩ 5% 0402
3H83	4822 117 13606	10kΩ 5% 0.01W 0402
3H84	4822 117 13606	10kΩ 5% 0.01W 0402
3H86	4822 117 13606	10kΩ 5% 0.01W 0402
3H87	4822 117 13606	10kΩ 5% 0.01W 0402
3H88	4822 117 13606	10kΩ 5% 0.01W 0402
3H90	4822 117 13606	10kΩ 5% 0.01W 0402
3H92	3198 031 07590	75Ω 5% 0402
3H93	4822 117 13606	10kΩ 5% 0.01W 0402
3H94	4822 117 13606	10kΩ 5% 0.01W 0402
3H95	4822 117 13597	330Ω 5% 0.01W 0402
3H97	4822 117 13606	10kΩ 5% 0.01W 0402
3H98	4822 117 13545	100Ω 1% 0402
3H99	4822 117 13545	100Ω 1% 0402
3I05	4822 117 13596	220Ω 5% 0.01W 0402
3I22	4822 117 13545	100Ω 1% 0402
3I23	4822 117 11297	100kΩ 5% 0.1W
3I25	4822 117 13545	100Ω 1% 0402
3I26	4822 117 11297	100kΩ 5% 0.1W
3I27	4822 051 30759	75Ω 5% 0.062W
3I29	4822 051 30759	75Ω 5% 0.062W
3I42	4822 051 30759	75Ω 5% 0.062W

3I50	4822 117 13601	22kΩ 5% 0402
3I51	3198 031 04730	47Ω 5% 0402
3I58▲	4822 117 11748	Fuse 2.2Ω 5% 1206
3I60	3198 031 06890	68Ω 5% 0402
3I61	3198 031 07590	75Ω 5% 0402
3I62	3198 031 07590	75Ω 5% 0402
3J03	3198 031 06890	68Ω 5% 0402
3J07	3198 031 06890	68Ω 5% 0402
3J08	3198 031 06890	68Ω 5% 0402
3J09	3198 031 06890	68Ω 5% 0402
3J11	3198 031 06890	68Ω 5% 0402
3J50	3198 031 03390	33Ω 1% 0402
3J51	3198 031 03390	33Ω 1% 0402
3J52	3198 031 03390	33Ω 1% 0402
3J53	3198 031 03390	33Ω 1% 0402
3J54	3198 031 03390	33Ω 1% 0402
3J55	3198 031 03390	33Ω 1% 0402
3J56	3198 031 03390	33Ω 1% 0402
3J57	3198 031 03390	33Ω 1% 0402
3J58	3198 031 03390	33Ω 1% 0402
3J59	3198 031 03390	33Ω 1% 0402
3J60	3198 031 03390	33Ω 1% 0402
3J61	3198 031 03390	33Ω 1% 0402
3J62	3198 031 03390	33Ω 1% 0402
3J63	3198 031 03390	33Ω 1% 0402
3J64	3198 031 03390	33Ω 1% 0402
3J65	3198 031 03390	33Ω 1% 0402
3J66	3198 031 03390	33Ω 1% 0402
3J67	3198 031 03390	33Ω 1% 0402
3J68	3198 031 03390	33Ω 1% 0402
3J69	3198 031 03390	33Ω 1% 0402
3J70	3198 031 03390	33Ω 1% 0402
3J71	3198 031 03390	33Ω 1% 0402
3J72	3198 031 03390	33Ω 1% 0402
3J73	3198 031 03390	33Ω 1% 0402
3J74	3198 031 03390	33Ω 1% 0402
3J75	3198 031 03390	33Ω 1% 0402
3J76	3198 031 03390	33Ω 1% 0402
3J77	3198 031 03390	33Ω 1% 0402
3J78	3198 031 03390	33Ω 1% 0402
3J79	3198 031 03390	33Ω 1% 0402
3J80	3198 031 03390	33Ω 1% 0402
3J81	3198 031 03390	33Ω 1% 0402
3J82	3198 031 03390	33Ω 1% 0402
3J83	3198 031 03390	33Ω 1% 0402
3J84	3198 031 03390	33Ω 1% 0402
3J85	3198 031 03390	33Ω 1% 0402
3L00	4822 117 13546	47Ω 5% 0402
3L01	4822 117 13546	47Ω 5% 0402
3L02	4822 117 13546	47Ω 5% 0402
3L03	4822 117 13546	47Ω 5% 0402
3L04	4822 117 13546	47Ω 5% 0402
3L05	4822 117 13546	47Ω 5% 0402
3L06	4822 117 13546	47Ω 5% 0402
3L07	4822 117 13546	47Ω 5% 0402
3L08	4822 117 13546	47Ω 5% 0402
3L09	4822 117 13546	47Ω 5% 0402
3L10	4822 117 13546	47Ω 5% 0402
3L11	4822 117 13546	47Ω 5% 0402
3L12	4822 117 13546	47Ω 5% 0402
3L13	4822 117 13546	47Ω 5% 0402
3L14	4822 117 13546	47Ω 5% 0402
3L15	4822 117 13546	47Ω 5% 0402
3L16	4822 117 13546	47Ω 5% 0402
3L17	4822 117 13546	47Ω 5% 0402
3L18	4822 117 13546	47Ω 5% 0402
3L19	4822 117 13546	47Ω 5% 0402
3L20	4822 117 13546	47Ω 5% 0402
3L21	4822 117 13546	47Ω 5% 0402
3L22	4822 117 13546	47Ω 5% 0402
3L23	4822 117 13546	47Ω 5% 0402
3L24	4822 117 13546	47Ω 5% 0402
3L25	4822 117 13546	47Ω 5% 0402
3L26	4822 117 13546	47Ω 5% 0402
3L27	4822 117 13546	47Ω 5% 0402
3L28	4822 117 13546	47Ω 5% 0402
3L29	4822 117 13546	47Ω 5% 0402
3L30	4822 117 13546	47Ω 5% 0402
3L31	4822 117 13546	47Ω 5% 0402
3L32	4822 117 13546	47Ω 5% 0402
3L33	4822 117 13546	47Ω 5% 0402
3L36	4822 117 13548	1kΩ 5% 0402
3L37	4822 117 13548	1kΩ 5% 0402
3L38	4822 117 13548	1kΩ 5% 0402
3L39	4822 117 13548	1kΩ 5% 0402
3L40	4822 117 13545	100Ω 1% 0402
3L41	4822 117 13546	47Ω 5% 0402
3L42	4822 117 13606	10kΩ 5% 0.01W 0402
3L43	4822 117 13546	47Ω 5% 0402
3L44	4822 117 13546	47Ω 5% 0402
3L45	3198 031 01810	180Ω 5% 0402
3L46	4822 117 13546	47Ω 5% 0402
3L47	4822 117 13545	100Ω 1% 0402
3L48	4822 117 13545	100Ω 1% 0402
3L50	3198 031 02290	22Ω 5% 0.1W 0402
3L51	4822 117 13545	100Ω 1% 0402
3L52	4822 117 13606	10kΩ 5% 0.01W 0402
3L53	4822 117 13606	10kΩ 5% 0.01W 0402
3L56	3198 031 02290	22Ω 5% 0.1W 0402
3L57	3198 031 02290	22Ω 5% 0.1W 0402
3L58	3198 031 02290	22Ω 5% 0.1W 0402
3L59	3198 031 02290	22Ω 5% 0.1W 0402
3L60	3198 031 02290	22Ω 5% 0.1W 0402
3L61	3198 031 02290	22Ω 5% 0.1W 0402
3L62	3198 031 02290	22Ω 5% 0.1W 0402
3L63	3198 031 02290	22Ω 5% 0.1W 0402
3L64	3198 031 02290	22Ω 5% 0.1W 0402
3L65	3198 031 02290	22Ω 5% 0.1W 0402
3L66	3198 031 02290	22Ω 5% 0.1W 0402
3L67	3198 031 02290	22Ω 5% 0.1W 0402
3L68	3198 031 02290	22Ω 5% 0.1W 0402
3L69	3198 031 02290	22Ω 5% 0.1W 0402
3L70	3198 031 02290	22Ω 5% 0.1W 0402
3L71	3198 031 02290	22Ω 5% 0.1W 0402
3L73	3198 031 02290	22Ω 5% 0.1W 0402
3L74	3198 031 02290	22Ω 5% 0.1W 0402
3L75	4822 117 13606	10kΩ 5% 0.01W 0402
3L76	4822 117 13545	100Ω 1% 0402
3L77	4822 117 13545	100Ω 1% 0402
3L78	4822 117 13546	47Ω 5% 0402
3L79	4822 117 13546	47Ω 5% 0402
3L80	4822 117 13545	100Ω 1% 0402
3L81	4822 117 13545	100Ω 1% 0402
3L82	4822 117 13545	100Ω 1% 0402
3L83	4822 117 13545	100Ω 1% 0402
3L84	4822 117 13545	100Ω 1% 0402
3L85	4822 117 13545	100Ω 1% 0402
3L86	4822 117 13545	100Ω 1% 0402
3L87	4822 117 13545	100Ω 1% 0402
3L88	4822 117 13545	100Ω 1% 0402
3L89	3198 031 02290	22Ω 5% 0.1W 0402
3L90	4822 117 13548	1kΩ 5% 0402
3L91	4822 117 13548	1kΩ 5% 0402
3L92	4822 117 13548	1kΩ 5% 0402
3L93	3198 031 06810	680Ω 5% 0.01W 0402
3L94	4822 117 13606	10kΩ 5% 0.01W 0402
3L95	4822 117 13606	10kΩ 5% 0.01W 0402
3L96	4822 117 13597	330Ω 5% 0.01W 0402
3L97	4822 117 13606	10kΩ 5% 0.01W 0402
3L98	4822 117 13606	10kΩ 5% 0.01W 0402
3LA0	4822 117 13606	10kΩ 5% 0.01W 0402
3LA1	4822 117 13606	10kΩ 5% 0.01W 0402
3LA2	4822 117 13606	10kΩ 5% 0.01W 0402
3LA3	4822 117 13606	10kΩ 5% 0.01W 0402
3LA4	4822 117 13606	10kΩ 5% 0.01W 0402
3LA5	4822 117 13548	1kΩ 5% 0402
3LA6	4822 117 13606	10kΩ 5% 0.01W 0402
3LA7	4822 117 13606	10kΩ 5% 0.01W 0402
3LA8	4822 117 13606	10kΩ 5% 0.01W 0402
3LA9	4822 117 13606	10kΩ 5% 0.01W 0402
3LB1	4822 117 13606	10kΩ 5% 0.01W 0402
3LB2	4822 117 13606	10kΩ 5% 0.01W 0402
3LB3	4822 117 13606	10kΩ 5% 0.01W 0402
3LB4	4822 117 13606	10kΩ 5% 0.01W 0402
3LB5	4822 117 13606	10kΩ 5% 0.01W 0402
3LB6	3198 031 01050	1MΩ 5% 0402
3LB7	4822 117 13606	10kΩ 5% 0.01W 0402
3LB8	4822 117 13606	10kΩ 5% 0.01W 0402
3LB9	4822 117 13606	10kΩ 5% 0.01W 0402
3LC0	4822 117 13606	10kΩ 5% 0.01W 0402
3LC1	4822 117 13606	10kΩ 5% 0.01W 0402
3LC2	4822 117 13606	10kΩ 5% 0.01W 0402
3LC3	4822 117 13606	10kΩ 5% 0.01W 0402
3LC4	4822 117 13606	10kΩ 5% 0.01W 0402
3LC5	4822 117 11297	100kΩ 5% 0.1W
3LC8	4822 117 13606	10kΩ 5% 0.01W 0402
3LC9	4822 117 13606	10kΩ 5% 0.01W 0402
3LD0	4822 117 13606	10kΩ 5% 0.01W 0402
3LD1	4822 117 13606	10kΩ 5% 0.01W 0402
3LD2	4822 117 13606	10kΩ 5% 0.01W 0402
3LD3	4822 117 13606	10kΩ 5% 0.01W 0402
3LD4	4822 117 13606	10kΩ 5% 0.01W 0402
3LD5	4822 117 13606	10kΩ 5% 0.01W 0402
3LD6	4822 117 13606	10kΩ 5% 0.01W 0402
3LD7	4822 117 13606	10kΩ 5% 0.01W 0402
3LD8	4822 117 13606	10kΩ 5% 0.01W 0402
3LD9	4822 117 13606	10kΩ 5% 0.01W 0402
3LE0	4822 117 13606	10kΩ 5% 0.01W 0402
3LE1	4822 117 13545	100Ω 1% 0402
3LE2	4822 117 13545	100Ω 1% 0402
3LE3	3198 031 04720	4.7kΩ 5% 0402
3LE4	3198 031 04720	4.7kΩ 5% 0402
3LE5	4822 117 13545	100Ω 1% 0402
3LE7	4822 117 13606	10kΩ 5% 0.01W 0402
3LE8	4822 117 13606	10kΩ 5% 0.01W 0402
3LE9	4822 117 13606	10kΩ 5% 0.01W 0402
3LF0	4822 117 13545	100Ω 1% 0402
3LF1	4822 117 13606	10kΩ 5% 0.01W 0402
3LF2	4822 117 13606	10kΩ 5% 0.01W 0402
3LF3	4822 117 13606	10kΩ 5% 0.01W 0402
3LF4	4822 117 13603	33kΩ 5% 0402
3LF5	3198 031 01830	18kΩ 5% 0.01W 0402
3LF7	4822 117 13606	10kΩ 5% 0.01W 0402
3LF8	4822 117 13545	100Ω 1% 0402
3LG0	4822 117 13606	10kΩ 5% 0.01W 0402
3LG1	4822 117 13606	10kΩ 5% 0.01W 0402
3LG2	4822 117 13606	10kΩ 5% 0.01W 0402
3LG3	4822 117 13545	100Ω 1% 0402
3LG4	4822 117 13545	100Ω 1% 0402
3LG5	4822 117 13545	100Ω 1% 0402
3LG6	4822 117 13545	100Ω 1% 0402
3LG8	4822 117 13545	100Ω 1% 0402
3LG9	4822 117 13545	100Ω 1% 0402
3LH0	4822 117 13545	100Ω 1% 0402
3LH1	4822 117 13545	100Ω 1% 0402
3LH2	4822 117 13597	330Ω 5% 0.01W 0402
3LH3	4822 117 13545	100Ω 1% 0402
3LH4	4822 117 13545	100Ω 1% 0402
3LH5	4822 117 13606	10kΩ 5% 0.01W 0402
3LH6	4822 117 13606	10kΩ 5% 0.01W 0402
3LH7	4822 117 13545	100Ω 1% 0402
3LH8	4822 117 13545	100Ω 1% 0402
3LH9	4822 117 13545	100Ω 1% 0402
3LJ0	4822 117 13545	100Ω 1% 0402
3LJ1	4822 117 13545	100Ω 1% 0402
3LJ2	4822 117 13606	10kΩ 5% 0.01W 0402
3LJ3	4822 117 13606	10kΩ 5% 0.01W 0402
3LJ4	4822 117 13545	100Ω 1% 0402
3LJ5	4822 117 13545	100Ω 1% 0402
3LJ6	4822 117 13545	100Ω 1% 0402
3LJ7	4822 117 13545	100Ω 1% 0402
3LJ8	4822 117 13545	100Ω 1% 0402
3LJ9	4822 117 13545	100Ω 1% 0402
3LK0	4822 117 13545	100Ω 1% 0402
3LK1	4822 117 13545	100Ω 1% 0402
3LK2	4822 117 13545	100Ω 1% 0402
3LK3	4822 117 13545	100Ω 1% 0402
3LK4	4822 117 13545	100Ω 1% 0402
3LK5	4822 117 13545	100Ω 1% 0402
3LK6	4822 117 13545	100Ω 1% 0402
3LK7	4822 117 13545	100Ω 1% 0402
3LK8	4822 117 13545	100Ω 1% 0402
3LK9	4822 117 13545	100Ω 1% 0402
3LL0	4822 117 13545	100Ω 1% 0402
3LL1	4822 117 13545	100Ω 1% 0402
3LL2	4822 117 13545	100Ω 1% 0402
3LL3	4822 117 13545	100Ω 1% 0402
3LL4	4822 117 13545	100Ω 1% 0402
3LL5	4822 117 13545	100Ω 1% 0402
3LL6	4822 117 13545	100Ω 1% 0402
3LL7	4822 117 13545	100Ω 1% 0402
3LL8	4822 117 13545	100Ω 1% 0402
3LL9	4822 117 13606	10kΩ 5% 0.01W 0402
3LM0	3198 031 03390	33Ω 1% 0402
3LM1	3198 031 03390	33Ω 1% 0402
3LM2	3198 031 03390	33Ω 1% 0402
3LM3	3198 031 03390	33Ω 1% 0402
3LM4	3198 031 03390	33Ω 1% 0402
3LM5	3198 031 03390	33Ω 1% 0402
3LM6	3198 031 03390	33Ω 1% 0402
3LM7	3198 031 03390	33Ω 1% 0402
3LM8	3198 031 03390	33Ω 1% 0402
3LM9	3198 031 03390	33Ω 1% 0402
3LN2	4822 117 13606	10kΩ 5% 0.01W 0402
3LN3	4822 117 13606	10kΩ 5% 0.01W 0402
3LN5	3198 031 03390	33Ω 1% 0402
3LN6	3198 031 03390	33Ω 1% 0402
3LN7	3198 031 03390	33Ω 1% 0402
3LP0	3198 031 03390	33Ω 1% 0402
3LP1	3198 031 03390	33Ω 1% 0402
3LP2	3198 031 02290	22Ω 5% 0.1W 0402
3LP3	3198 031 02290	22Ω 5% 0.1W 0402
3LP4	3198 031 03390	33Ω 1% 0402
3LP5	3198 031 03390	33Ω 1% 0402
3LP6	3198 031 03390	33Ω 1% 0402
3M01	4822 117 13545	100Ω 1% 0402
3M03	3198 031 01090	10Ω 5% 0.01W 0402
3M04	4822 117 13545	100Ω 1% 0402
3M05	4822 117 13545	100Ω 1% 0402
3M08	4822 117 13545	100Ω 1% 0402
3M20	4822 117 13545	100Ω 1% 0402
3M21	4822 117 13545	100Ω 1% 0402
3M24	4822 117 13545	100Ω 1% 0402
3M25	4822 117 13545	100Ω 1% 0402
3M30	4822 117 13545	100Ω 1% 0402
3M31	4822 117 13545	100Ω 1% 0402
3M35	4822 117 13545	100Ω 1% 0402
3M40	3198 031 01230	12kΩ 5% 0402
3M41	3198 031 04730	47Ω 5% 0402
3M42	3198 031 01230	12kΩ 5% 0402
3M43	3198 031 04720	4.7kΩ 5% 0402
3M46	3198 031 01530	15kΩ 5% 0.01W 0402

3M47	4822 117 13548	1kΩ 5% 0402
3M57	4822 117 13545	100Ω 1% 0402
3M58	4822 117 13545	100Ω 1% 0402
3N08	2322 706 71203	12kΩ 5% 0402
3N09	4822 117 13545	100Ω 1% 0402
3N12	3198 031 01530	15kΩ 5% 0.01W 0402
3N13	3198 031 01530	15kΩ 5% 0.01W 0402
3N14	3198 031 01530	15kΩ 5% 0.01W 0402
3N15	3198 031 01530	15kΩ 5% 0.01W 0402
3N16	3198 031 01530	15kΩ 5% 0.01W 0402
3N17	3198 031 01530	15kΩ 5% 0.01W 0402
3N18	3198 031 01530	15kΩ 5% 0.01W 0402
3N19	3198 031 01530	15kΩ 5% 0.01W 0402
3N25	3198 031 04720	4.7kΩ 5% 0402
3N27	3198 031 04720	4.7kΩ 5% 0402
3N28	3198 031 04720	4.7kΩ 5% 0402
3N29	3198 031 04720	4.7kΩ 5% 0402
3N30	3198 031 04720	4.7kΩ 5% 0402
3N31	3198 031 04720	4.7kΩ 5% 0402
3N32	3198 031 04720	4.7kΩ 5% 0402
3O00	3198 031 01050	1MΩ 5% 0402
3O01	4822 117 13543	470Ω 5% 0402
3O02	4822 117 13545	100Ω 1% 0402
3O03	4822 117 13606	10kΩ 5% 0.01W 0402
3O04	4822 117 13548	1kΩ 5% 0402
3O05	3198 031 02710	270Ω 5% 0.1W 0402
3O06	4822 117 13596	220Ω 5% 0.01W 0402
3O07	4822 117 13606	10kΩ 5% 0.01W 0402
3O08	4822 117 13606	10kΩ 5% 0.01W 0402
3O09	4822 117 13596	220Ω 5% 0.01W 0402
3O10	3198 031 02710	270Ω 5% 0.1W 0402
3O25	4822 117 13545	100Ω 1% 0402
3O26	4822 117 13545	100Ω 1% 0402
3O27	4822 117 13545	100Ω 1% 0402
3O28	4822 117 13545	100Ω 1% 0402
3P10	4822 051 30101	100Ω 5% 0.062W
3P11	4822 117 11297	100kΩ 5% 0.1W
3P12	4822 051 30102	1kΩ 5% 0.062W
3P13	4822 117 13545	100Ω 1% 0402
3P14	4822 117 11297	100kΩ 5% 0.1W
3P15	4822 051 30101	100Ω 5% 0.062W
3P16	4822 117 11297	100kΩ 5% 0.1W
3P17	4822 051 30102	1kΩ 5% 0.062W
3P18	4822 117 13545	100Ω 1% 0402
3P19	4822 117 11297	100kΩ 5% 0.1W
3P20	4822 051 30101	100Ω 5% 0.062W
3P21	4822 051 30759	75Ω 5% 0.062W
3P22	3198 031 08220	8.2kΩ 5% 0.5W
3P23	3198 031 03320	3.3kΩ 5% 0402
3P24	4822 051 30101	100Ω 5% 0.062W
3P25	4822 051 30759	75Ω 5% 0.062W
3P26	4822 051 30101	100Ω 5% 0.062W
3P27	4822 051 30759	75Ω 5% 0.062W
3P28	4822 051 30101	100Ω 5% 0.062W
3P29	4822 051 30759	75Ω 5% 0.062W
3P30	4822 051 30759	75Ω 5% 0.062W
3P31	4822 051 30101	100Ω 5% 0.062W
3P32	4822 051 30101	100Ω 5% 0.062W
3P33	4822 117 13548	1kΩ 5% 0402
3P34	4822 051 30759	75Ω 5% 0.062W
3P35	4822 051 30101	100Ω 5% 0.062W
3P36	4822 117 13548	1kΩ 5% 0402
3Q00	4822 117 13546	47Ω 5% 0402
3Q03	3198 031 07590	75Ω 5% 0402
3Q06	3198 031 07590	75Ω 5% 0402
3Q10	4822 117 13545	100Ω 1% 0402
3Q11	4822 117 13545	100Ω 1% 0402
3Q12	4822 117 13545	100Ω 1% 0402
3Q13	4822 117 13545	100Ω 1% 0402
3Q14	4822 117 13545	100Ω 1% 0402
3Q15	4822 117 13545	100Ω 1% 0402
3Q19	4822 117 13605	Jumper 0402
3Q20	4822 117 13605	Jumper 0402
3Q21	4822 117 13605	Jumper 0402
3Q22	4822 117 13605	Jumper 0402
3Q24	4822 117 13606	10kΩ 5% 0.01W 0402
3Q26	4822 117 13606	10kΩ 5% 0.01W 0402
3Q27	4822 117 13606	10kΩ 5% 0.01W 0402
3Q28	4822 117 13606	10kΩ 5% 0.01W 0402
3Q31	3198 031 04720	4.7kΩ 5% 0402
3Q32	3198 031 04720	4.7kΩ 5% 0402
3Q33	4822 117 13546	47Ω 5% 0402
3Q34	2322 705 70399	39Ω 5% 0402
3Q35	4822 117 13546	47Ω 5% 0402
3Q36	2322 705 70399	39Ω 5% 0402
3Q37	4822 117 13546	47Ω 5% 0402
3Q38	4822 117 13546	47Ω 5% 0402
3Q39	4822 117 13546	47Ω 5% 0402
3Q41	4822 117 13546	47Ω 5% 0402
3Q43	4822 117 13546	47Ω 5% 0402
3Q45	4822 117 13546	47Ω 5% 0402
3Q47	4822 117 13546	47Ω 5% 0402
3Q49	4822 117 13546	47Ω 5% 0402
3Q51	4822 117 13546	47Ω 5% 0402
3Q53	4822 117 13546	47Ω 5% 0402
3Q55	4822 117 13546	47Ω 5% 0402
3Q57	4822 117 13546	47Ω 5% 0402
3Q59	4822 117 13546	47Ω 5% 0402
3Q61	4822 117 13546	47Ω 5% 0402
3Q63	4822 117 13546	47Ω 5% 0402
3Q70	4822 117 13606	10kΩ 5% 0.01W 0402
3R00	4822 117 13548	1kΩ 5% 0402
3R01	4822 117 13548	1kΩ 5% 0402
3R02	4822 117 13546	47Ω 5% 0402
3R03	4822 117 13546	47Ω 5% 0402
3R04	4822 117 13546	47Ω 5% 0402
3R05	4822 117 13546	47Ω 5% 0402
3R06	4822 117 13546	47Ω 5% 0402
3R07	4822 117 13546	47Ω 5% 0402
3R08	4822 117 13546	47Ω 5% 0402
3R09	4822 117 13546	47Ω 5% 0402
3R10	4822 117 13546	47Ω 5% 0402
3R11	4822 117 13546	47Ω 5% 0402
3R12	4822 117 13546	47Ω 5% 0402
3R13	4822 117 13546	47Ω 5% 0402
3R14	4822 117 13546	47Ω 5% 0402
3R15	4822 117 13546	47Ω 5% 0402
3R16	4822 117 13546	47Ω 5% 0402
3R17	4822 117 13546	47Ω 5% 0402
3R19	4822 117 13546	47Ω 5% 0402
3R22	3198 031 04720	4.7kΩ 5% 0402
3R39	4822 117 13545	100Ω 1% 0402
3R42	4822 117 13545	100Ω 1% 0402
3R44	4822 117 13606	10kΩ 5% 0.01W 0402
3R46	4822 117 13606	10kΩ 5% 0.01W 0402
3R47	4822 117 13606	10kΩ 5% 0.01W 0402
3R48	3198 031 04720	4.7kΩ 5% 0402
3R50	3198 031 02290	22Ω 5% 0.1W 0402
3R51	3198 031 02290	22Ω 5% 0.1W 0402
3R52	3198 031 02290	22Ω 5% 0.1W 0402
3R53	3198 031 02290	22Ω 5% 0.1W 0402
3R54	3198 031 02290	22Ω 5% 0.1W 0402
3R55	3198 031 02290	22Ω 5% 0.1W 0402
3R56	3198 031 02290	22Ω 5% 0.1W 0402
3R57	3198 031 02290	22Ω 5% 0.1W 0402
3R58	3198 031 02290	22Ω 5% 0.1W 0402
3R59	3198 031 02290	22Ω 5% 0.1W 0402
3R60	3198 031 02290	22Ω 5% 0.1W 0402
3R61	3198 031 02290	22Ω 5% 0.1W 0402
3R62	3198 031 02290	22Ω 5% 0.1W 0402
3R63	3198 031 02290	22Ω 5% 0.1W 0402
3R64	3198 031 02290	22Ω 5% 0.1W 0402
3R65	3198 031 02290	22Ω 5% 0.1W 0402
3R66	4822 117 13545	100Ω 1% 0402
3R67	4822 117 13548	1kΩ 5% 0402
3R68	4822 117 13548	1kΩ 5% 0402
3R71	4822 117 13546	47Ω 5% 0402
3R72	4822 117 13546	47Ω 5% 0402
3R73	3198 031 02290	22Ω 5% 0.1W 0402
3R74	3198 031 02290	22Ω 5% 0.1W 0402
3R75	4822 117 13548	1kΩ 5% 0402
3R85	4822 117 13546	47Ω 5% 0402
3S13	2322 734 63309	33Ω 1% 0.1W 0805
3S14	4822 117 13548	1kΩ 5% 0402
3S15	3198 031 02240	220kΩ 5% 0.1W 0402
3S16	2322 734 63309	33Ω 1% 0.1W 0805
3S17	3198 031 02240	220kΩ 5% 0.1W 0402
3S19	4822 117 11297	100kΩ 5% 0.1W
3S20	4822 117 13606	10kΩ 5% 0.01W 0402
3S21	3198 031 06840	680kΩ 5% 0.01W 0402
3S22	4822 117 13606	10kΩ 5% 0.01W 0402
3S23	4822 117 13548	1kΩ 5% 0402
3S24	4822 117 13606	10kΩ 5% 0.01W 0402
3S46	4822 117 11297	100kΩ 5% 0.1W
3S49	2322 734 63309	33Ω 1% 0.1W 0805
3S63	4822 117 13548	1kΩ 5% 0402
3S64	3198 031 01510	150Ω 5% 0.01W 0402
3S65	4822 117 13596	220Ω 5% 0.01W 0402
3S66	4822 117 13606	10kΩ 5% 0.01W 0402
3S67	3198 031 02240	220kΩ 5% 0.1W 0402
3S68	4822 117 11297	100kΩ 5% 0.1W
3S69	2322 734 63309	33Ω 1% 0.1W 0805
3S71	4822 117 13548	1kΩ 5% 0402
3S72	3198 031 01510	150Ω 5% 0.01W 0402
3S73	4822 117 13596	220Ω 5% 0.01W 0402
3S74	4822 117 13606	10kΩ 5% 0.01W 0402
3S75	3198 031 02240	220kΩ 5% 0.1W 0402
3S95	4822 117 13606	10kΩ 5% 0.01W 0402
3S96	4822 117 13606	10kΩ 5% 0.01W 0402
3T04	4822 117 13545	100Ω 1% 0402
3T06	4822 117 13545	100Ω 1% 0402
3T07	4822 117 13545	100Ω 1% 0402
3T09	4822 117 13545	100Ω 1% 0402
3T12	4822 117 13606	10kΩ 5% 0.01W 0402
3T21	4822 117 13602	2.2kΩ 5% 0.01W 0402
3T22	3198 031 02720	2.7kΩ 5% 0.01W 0402
3T23	3198 031 02710	270Ω 5% 0.1W 0402
3T24	3198 031 03390	33Ω 1% 0402
3T25	3198 031 03390	33Ω 1% 0402
3T26	4822 117 13603	33kΩ 5% 0402
3T28	4822 117 13601	22kΩ 5% 0402
3T29	4822 117 13602	2.2kΩ 5% 0.01W 0402
3U01	4822 117 13606	10kΩ 5% 0.01W 0402
3U02	4822 117 13606	10kΩ 5% 0.01W 0402
3U03	4822 117 13606	10kΩ 5% 0.01W 0402
3U04	2322 706 71002	1kΩ 1% 0402
3U05	3198 031 02720	2.7kΩ 5% 0.01W 0402
3U06	3198 031 04720	4.7kΩ 5% 0402
3U07▲	5322 117 11726	10Ω 5%
3U08▲	5322 117 11726	10Ω 5%
3U09	4822 117 13548	1kΩ 5% 0402
3U10	3198 031 02720	2.7kΩ 5% 0.01W 0402
3U11	2322 706 71002	1kΩ 1% 0402
3U12	2322 706 73901	390Ω 1% 0402
3U13	2322 706 71002	1kΩ 1% 0402
3U14	4822 117 13548	1kΩ 5% 0402
3U15	4822 117 11297	100kΩ 5% 0.1W
3U16	3198 031 02720	2.7kΩ 5% 0.01W 0402
3U17	4822 117 13548	1kΩ 5% 0402
3U21	4822 117 13601	22kΩ 5% 0402
3U22	4822 117 13601	22kΩ 5% 0402
3U23	4822 117 13601	22kΩ 5% 0402
3U24	4822 117 13603	33kΩ 5% 0402
3U25	4822 117 13603	33kΩ 5% 0402
3U26	4822 117 13601	22kΩ 5% 0402
3U27	2322 706 75601	560Ω 1% 0402
3U28	2322 706 72702	2.7kΩ 1% 0402
3U29	3198 031 06820	6.8kΩ 5% 0.01W 0402
3U30	4822 117 13601	22kΩ 5% 0402
3U31	4822 117 11297	100kΩ 5% 0.1W
3U32▲	5322 117 11726	10Ω 5%
3U33	4822 117 11297	100kΩ 5% 0.1W
3U37	3198 031 06820	6.8kΩ 5% 0.01W 0402
3U38	3198 031 06820	6.8kΩ 5% 0.01W 0402
3U39	3198 031 06820	6.8kΩ 5% 0.01W 0402
3U40	4822 117 13548	1kΩ 5% 0402
3U41	4822 117 13548	1kΩ 5% 0402
3U42	4822 117 13548	1kΩ 5% 0402
3U45	4822 051 30109	10Ω 5% 0.062W
3U46	4822 117 13613	2.2Ω 5% 0603
3U47	4822 051 30109	10Ω 5% 0.062W
3U48	4822 117 13613	2.2Ω 5% 0603
3U49	4822 051 30109	10Ω 5% 0.062W
3U50	4822 117 13613	2.2Ω 5% 0603
3U51	4822 117 13545	100Ω 1% 0402
3U54	4822 051 30109	10Ω 5% 0.062W
3U55	4822 051 30109	10Ω 5% 0.062W
3U56	4822 051 30109	10Ω 5% 0.062W
3U61	4822 117 13606	10kΩ 5% 0.01W 0402
3U66	4822 117 13545	100Ω 1% 0402
3U67	4822 117 13548	1kΩ 5% 0402
3U68	4822 117 13545	100Ω 1% 0402
3U69	4822 117 13545	100Ω 1% 0402
3U73	4822 117 13596	220Ω 5% 0.01W 0402
3U74	4822 117 13606	10kΩ 5% 0.01W 0402
3U75	3198 031 01510	150Ω 5% 0.01W 0402
3U76	4822 117 13596	220Ω 5% 0.01W 0402
3U77	4822 117 13606	10kΩ 5% 0.01W 0402
3U78	4822 117 13545	100Ω 1% 0402
3U79	3198 031 01090	10Ω 5% 0.01W 0402
3U80	4822 117 13606	10kΩ 5% 0.01W 0402
3U96	4822 117 13608	4.7Ω 5% 0603 0.62W
3U97	4822 117 13608	4.7Ω 5% 0603 0.62W
3U98	4822 117 13608	4.7Ω 5% 0603 0.62W
3UA7	4822 117 13606	10kΩ 5% 0.01W 0402
3UA8	3198 031 01510	150Ω 5% 0.01W 0402
3UB1	4822 117 13601	22kΩ 5% 0402
3UB2	4822 117 13601	22kΩ 5% 0402
3UB3	4822 117 13548	1kΩ 5% 0402
3UB4	4822 117 13606	10kΩ 5% 0.01W 0402
3UB5	4822 117 13543	470Ω 5% 0402
3UB6	4822 117 13601	22kΩ 5% 0402
3UB7	4822 117 11297	100kΩ 5% 0.1W
3UB8	4822 117 13602	2.2kΩ 5% 0.01W 0402
3UB9	4822 117 13605	Jumper 0402
3UC1	4822 117 13605	Jumper 0402
3UC2	2322 706 71002	1kΩ 1% 0402
3UC4	4822 117 13605	Jumper 0402
3V00	3198 031 02290	22Ω 5% 0.1W 0402
3V01	3198 031 02290	22Ω 5% 0.1W 0402
3V02	3198 031 02290	22Ω 5% 0.1W 0402
3V03	3198 031 02290	22Ω 5% 0.1W 0402
3V04	3198 031 02290	22Ω 5% 0.1W 0402
3V05	3198 031 02290	22Ω 5% 0.1W 0402
3V06	3198 031 02290	22Ω 5% 0.1W 0402
3V07	3198 031 02290	22Ω 5% 0.1W 0402
3V08	3198 031 02290	22Ω 5% 0.1W 0402
3V09	3198 031 02290	22Ω 5% 0.1W 0402
3V10	3198 031 02290	22Ω 5% 0.1W 0402
3V11	3198 031 02290	22Ω 5% 0.1W 0402
3V12	3198 031 02290	22Ω 5% 0.1W 0402
3V13	3198 031 02290	22Ω 5% 0.1W 0402

3V14	3198 031 02290	22Ω 5% 0.1W 0402
3V15	3198 031 02290	22Ω 5% 0.1W 0402
3V16	3198 031 02290	22Ω 5% 0.1W 0402
3V17	3198 031 02290	22Ω 5% 0.1W 0402
3V18	3198 031 02290	22Ω 5% 0.1W 0402
3V19	3198 031 02290	22Ω 5% 0.1W 0402
3V20	3198 031 02290	22Ω 5% 0.1W 0402
3V21	3198 031 02290	22Ω 5% 0.1W 0402
3V22	3198 031 02290	22Ω 5% 0.1W 0402
3V23	3198 031 02290	22Ω 5% 0.1W 0402
3V24	2322 706 76801	680Ω 1% 0402
3V25	2322 706 73301	330Ω 1% 0402
3V26	2322 706 75601	560Ω 1% 0402
3V27	2322 706 75601	560Ω 1% 0402
3V32	3198 031 02290	22Ω 5% 0.1W 0402
3V33	3198 031 02290	22Ω 5% 0.1W 0402
3V34	3198 031 02290	22Ω 5% 0.1W 0402
3V35	3198 031 02290	22Ω 5% 0.1W 0402
3V36	3198 031 02290	22Ω 5% 0.1W 0402
3V37	3198 031 02290	22Ω 5% 0.1W 0402
3V38	3198 031 02290	22Ω 5% 0.1W 0402
3V39	3198 031 02290	22Ω 5% 0.1W 0402
3V40	3198 031 02290	22Ω 5% 0.1W 0402
3V41	3198 031 02290	22Ω 5% 0.1W 0402
3V42	3198 031 02290	22Ω 5% 0.1W 0402
3V43	3198 031 02290	22Ω 5% 0.1W 0402
3V44	4822 117 13545	100Ω 1% 0402
3V45	3198 031 01810	180Ω 5% 0402
3V46	3198 031 01810	180Ω 5% 0402
3V78	4822 117 13548	1kΩ 5% 0402
3W03	4822 117 13545	100Ω 1% 0402
3W05	4822 117 13545	100Ω 1% 0402
3W13	4822 117 13606	10kΩ 5% 0.01W 0402
3W14	4822 117 13602	2.2kΩ 5% 0.01W 0402
3W15	3198 031 02720	2.7kΩ 5% 0.01W 0402
3W16	3198 031 02710	270Ω 5% 0.1W 0402
3W17	3198 031 03390	33Ω 1% 0402
3W18	3198 031 03390	33Ω 1% 0402
3W20	4822 117 13603	33kΩ 5% 0402
3W22	4822 117 13601	22kΩ 5% 0402
3W23	4822 117 13602	2.2kΩ 5% 0.01W 0402
9A10	4822 117 13605	Jumper 0402
9A11	4822 117 13605	Jumper 0402
9A12	4822 117 13605	Jumper 0402
9A23	4822 117 13605	Jumper 0402
9A51	4822 117 13605	Jumper 0402
9A53	4822 117 13605	Jumper 0402
9A55	4822 117 13605	Jumper 0402
9A57	4822 117 13605	Jumper 0402
9B14	4822 117 13605	Jumper 0402
9B15	4822 117 13605	Jumper 0402
9B17	4822 117 13605	Jumper 0402
9B19	4822 117 13605	Jumper 0402
9B21	4822 117 13605	Jumper 0402
9B23	4822 117 13605	Jumper 0402
9C01	4822 051 20008	Jumper 0805
9C03	4822 051 20008	Jumper 0805
9C23	4822 117 13605	Jumper 0402
9C51	4822 117 13605	Jumper 0402
9C53	4822 117 13605	Jumper 0402
9C55	4822 117 13605	Jumper 0402
9C57	4822 117 13605	Jumper 0402
9C59	4822 117 13605	Jumper 0402
9E14	4822 117 13545	100Ω 1% 0402
9E16	4822 117 13605	Jumper 0402
9E19	4822 117 13605	Jumper 0402
9E21	4822 117 13605	Jumper 0402
9E29	4822 117 13605	Jumper 0402
9E31	4822 117 13605	Jumper 0402
9E35	4822 117 13605	Jumper 0402
9E37	4822 117 13605	Jumper 0402
9E38	4822 117 13605	Jumper 0402
9E45	4822 117 13605	Jumper 0402
9E46	4822 117 13605	Jumper 0402
9E55	4822 117 13605	Jumper 0402
9E56	4822 117 13605	Jumper 0402
9E57	4822 117 13605	Jumper 0402
9E58	4822 117 13605	Jumper 0402
9E59	4822 117 13605	Jumper 0402
9E60	4822 117 13605	Jumper 0402
9E61	4822 117 13605	Jumper 0402
9E62	4822 117 13605	Jumper 0402
9E63	4822 117 13605	Jumper 0402
9E64	4822 117 13605	Jumper 0402
9E65	4822 117 13605	Jumper 0402
9E66	4822 117 13605	Jumper 0402
9E67	4822 117 13605	Jumper 0402
9E68	4822 117 13605	Jumper 0402
9E69	4822 117 13605	Jumper 0402
9E70	4822 117 13605	Jumper 0402
9E71	4822 117 13545	100Ω 1% 0402
9E72	4822 117 13605	Jumper 0402
9E73	4822 117 13545	100Ω 1% 0402
9E74	4822 117 13605	Jumper 0402
9E75	4822 117 13605	Jumper 0402
9E76	4822 117 13605	Jumper 0402
9E77	4822 117 13605	Jumper 0402
9E78	4822 117 13605	Jumper 0402
9E79	4822 117 13605	Jumper 0402
9E80	4822 117 13605	Jumper 0402
9E86	4822 117 13605	Jumper 0402
9E87	4822 117 13605	Jumper 0402
9E88	4822 117 13605	Jumper 0402
9E90	4822 117 13605	Jumper 0402
9E92	4822 117 13605	Jumper 0402
9E94	4822 117 13605	Jumper 0402
9E96	4822 117 13605	Jumper 0402
9F00	4822 117 13605	Jumper 0402
9F01	4822 117 13605	Jumper 0402
9F04	4822 117 13605	Jumper 0402
9F05	4822 117 13605	Jumper 0402
9F09	4822 117 13605	Jumper 0402
9F21	4822 117 13605	Jumper 0402
9F22	4822 117 13605	Jumper 0402
9F23	4822 117 13605	Jumper 0402
9F24	4822 117 13605	Jumper 0402
9F25	4822 117 13605	Jumper 0402
9F27	4822 117 13605	Jumper 0402
9F30	4822 117 13605	Jumper 0402
9F31	4822 117 13605	Jumper 0402
9G00	4822 117 13605	Jumper 0402
9G01	4822 117 13605	Jumper 0402
9H01	4822 117 13605	Jumper 0402
9H02	4822 117 13605	Jumper 0402
9H03	4822 117 13605	Jumper 0402
9H05	4822 117 13605	Jumper 0402
9H06	4822 117 13605	Jumper 0402
9H07	4822 117 13605	Jumper 0402
9H08	4822 117 13605	Jumper 0402
9H09	4822 117 13605	Jumper 0402
9H10	4822 117 13605	Jumper 0402
9H11	4822 117 13605	Jumper 0402
9H12	4822 117 13605	Jumper 0402
9H13	4822 117 13605	Jumper 0402
9H14	4822 117 13605	Jumper 0402
9H15	4822 117 13605	Jumper 0402
9H16	4822 117 13605	Jumper 0402
9H18	4822 117 13605	Jumper 0402
9H19	4822 117 13605	Jumper 0402
9H20	4822 117 13605	Jumper 0402
9H21	4822 117 13605	Jumper 0402
9H22	4822 117 13605	Jumper 0402
9H23	4822 117 13605	Jumper 0402
9H24	4822 117 13605	Jumper 0402
9H26	4822 117 13605	Jumper 0402
9H27	4822 117 13605	Jumper 0402
9H29	4822 117 13605	Jumper 0402
9H30	4822 117 13605	Jumper 0402
9H32	4822 117 13605	Jumper 0402
9H33	4822 117 13605	Jumper 0402
9H34	4822 117 13605	Jumper 0402
9H50	4822 117 13605	Jumper 0402
9H51	4822 117 13605	Jumper 0402
9H52	4822 117 13605	Jumper 0402
9H53	4822 117 13605	Jumper 0402
9H54	4822 117 13605	Jumper 0402
9H55	4822 117 13605	Jumper 0402
9H56	4822 117 13605	Jumper 0402
9H57	4822 117 13605	Jumper 0402
9H59	4822 117 13605	Jumper 0402
9I20	4822 117 13605	Jumper 0402
9I42	4822 117 13605	Jumper 0402
9I91	4822 051 20008	Jumper 0805
9I92	4822 051 20008	Jumper 0805
9I94	4822 051 20008	Jumper 0805
9K01	4822 117 13605	Jumper 0402
9L01	4822 117 13605	Jumper 0402
9L02	4822 117 13605	Jumper 0402
9L40	4822 117 13605	Jumper 0402
9L41	4822 117 13605	Jumper 0402
9LA0	4822 117 13605	Jumper 0402
9LA1	4822 117 13605	Jumper 0402
9LA7	4822 117 13605	Jumper 0402
9LA8	4822 117 13605	Jumper 0402
9LC7	4822 117 13605	Jumper 0402
9M02	4822 051 20008	Jumper 0805
9M03	4822 051 20008	Jumper 0805
9M07	4822 117 13605	Jumper 0402
9M09	4822 117 13605	Jumper 0402
9N23	4822 117 13605	Jumper 0402
9N24	4822 117 13605	Jumper 0402
9O16	4822 117 13605	Jumper 0402
9P10	4822 117 13605	Jumper 0402
9P21	4822 117 13605	Jumper 0402
9P22	4822 117 13605	Jumper 0402
9P23	4822 117 13605	Jumper 0402
9Q06	4822 117 13605	Jumper 0402
9R02	4822 117 13605	Jumper 0402
9R03	4822 117 13605	Jumper 0402
9R04	4822 117 13605	Jumper 0402
9R05	4822 117 13605	Jumper 0402
9R06	4822 117 13605	Jumper 0402
9R13	4822 117 13605	Jumper 0402
9R15	4822 117 13605	Jumper 0402
9R17	4822 117 13605	Jumper 0402
9R20	4822 117 13605	Jumper 0402
9R21	4822 117 13605	Jumper 0402
9R22	4822 117 13605	Jumper 0402
9R23	4822 117 13605	Jumper 0402
9R26	4822 117 13605	Jumper 0402
9R50	4822 117 13605	Jumper 0402
9R51	4822 117 13605	Jumper 0402
9T05	4822 117 13605	Jumper 0402
9T06	4822 117 13605	Jumper 0402
9T11	4822 117 13605	Jumper 0402
9U01	4822 117 13605	Jumper 0402
9U02	4822 117 13605	Jumper 0402
9U03	4822 117 13605	Jumper 0402
9U04	4822 051 20008	Jumper 0805
9U05	4822 051 20008	Jumper 0805
9U07	4822 051 20008	Jumper 0805
9U08	4822 051 20008	Jumper 0805
9U09	4822 051 20008	Jumper 0805
9U10	4822 051 20008	Jumper 0805
9W10	4822 117 13605	Jumper 0402
9Y03	4822 117 13605	Jumper 0402
9Y04	4822 117 13605	Jumper 0402
9Y05	4822 117 13605	Jumper 0402

5A01	2422 549 44197	Bead 220Ω at 100MHz
5A02	2422 549 44197	Bead 220Ω at 100MHz
5A03	2422 549 44197	Bead 220Ω at 100MHz
5A33	2422 549 44197	Bead 220Ω at 100MHz
5A34	2422 549 44197	Bead 220Ω at 100MHz
5A36	2422 549 44197	Bead 220Ω at 100MHz
5A52	2422 549 44197	Bead 220Ω at 100MHz
5A53	2422 549 44197	Bead 220Ω at 100MHz
5A54	2422 549 44197	Bead 220Ω at 100MHz
5A56	2422 549 44197	Bead 220Ω at 100MHz
5A57	3198 018 33370	0.33µH 10% 0805
5B00	2422 549 43769	Bead 30Ω at 100MHz
5B01	2422 549 43769	Bead 30Ω at 100MHz
5B10	2422 549 44197	Bead 220Ω at 100MHz
5B11	2422 549 44197	Bead 220Ω at 100MHz
5B12	2422 549 44197	Bead 220Ω at 100MHz
5B13	2422 549 44197	Bead 220Ω at 100MHz
5B14	4822 157 11506	Bead 120Ω at 100MHz
5B15	4822 157 11506	Bead 120Ω at 100MHz
5B16	4822 157 11506	Bead 120Ω at 100MHz
5B17	2422 549 44197	Bead 220Ω at 100MHz
5B18	4822 157 11506	Bead 120Ω at 100MHz
5C01	2422 549 44197	Bead 220Ω at 100MHz
5C03	2422 549 44197	Bead 220Ω at 100MHz
5C31	2422 549 44197	Bead 220Ω at 100MHz
5C33	2422 549 44197	Bead 220Ω at 100MHz
5C34	2422 549 44197	Bead 220Ω at 100MHz
5C36	2422 549 44197	Bead 220Ω at 100MHz
5C52	2422 549 44197	Bead 220Ω at 100MHz
5C53	2422 549 44197	Bead 220Ω at 100MHz
5C54	2422 549 44197	Bead 220Ω at 100MHz
5C55	2422 549 44197	Bead 220Ω at 100MHz
5C56	2422 549 44197	Bead 220Ω at 100MHz
5C57	3198 018 33370	0.33µH 10% 0805
5E04	2422 549 43062	Bead 600Ω at 100MHz
5F10	2422 549 44197	Bead 220Ω at 100MHz
5G00	3198 018 90050	Bead 1kΩ at 100MHz
5G01	2422 549 42896	Bead 120Ω 100MHz
5G02	2422 549 42896	Bead 120Ω 100MHz
5G10	3198 018 90050	Bead 1kΩ at 100MHz
5G11	3198 018 90050	Bead 1kΩ at 100MHz
5G12	3198 018 90050	Bead 1kΩ at 100MHz
5G13	3198 018 90050	Bead 1kΩ at 100MHz
5G14	3198 018 90050	Bead 1kΩ at 100MHz
5G15	3198 018 90050	Bead 1kΩ at 100MHz
5GA0	2422 549 45325	Bead 67Ω at 100MHz
5GA1	2422 549 45325	Bead 67Ω at 100MHz
5GA2	2422 549 45325	Bead 67Ω at 100MHz
5GA3	2422 549 45325	Bead 67Ω at 100MHz
5GA4	2422 549 45325	Bead 67Ω at 100MHz
5GA5	2422 549 45325	Bead 67Ω at 100MHz
5GA6	2422 549 45325	Bead 67Ω at 100MHz
5GA7	2422 549 45325	Bead 67Ω at 100MHz
5GA8	2422 549 45325	Bead 67Ω at 100MHz
5GA9	2422 549 45325	Bead 67Ω at 100MHz
5GB2	2422 549 44197	Bead 220Ω at 100MHz
5GB3	2422 549 44197	Bead 220Ω at 100MHz
5GB4	2422 549 44197	Bead 220Ω at 100MHz
5H01	2422 549 45325	Bead 67Ω at 100MHz
5H02	2422 549 45325	Bead 67Ω at 100MHz

5H05	2422 549 43769	Bead 30Ω at 100MHz
5I01	2422 549 42896	Bead 120Ω 100MHz
5I02	2422 549 42896	Bead 120Ω 100MHz
5J00	2422 549 42896	Bead 120Ω 100MHz
5J01	2422 549 42896	Bead 120Ω 100MHz
5J02	2422 549 42896	Bead 120Ω 100MHz
5J03	2422 549 42896	Bead 120Ω 100MHz
5J04	2422 549 42896	Bead 120Ω 100MHz
5J05	2422 549 42896	Bead 120Ω 100MHz
5J06	2422 549 42896	Bead 120Ω 100MHz
5J07	2422 549 42896	Bead 120Ω 100MHz
5L50	2422 549 43769	Bead 30Ω at 100MHz
5LA1	2422 549 43769	Bead 30Ω at 100MHz
5LA2	2422 549 43769	Bead 30Ω at 100MHz
5LA3	2422 549 43769	Bead 30Ω at 100MHz
5LA4	2422 549 43062	Bead 600Ω at 100MHz
5LN0	2422 549 43769	Bead 30Ω at 100MHz
5LN1	2422 549 43769	Bead 30Ω at 100MHz
5LN2	2422 549 43769	Bead 30Ω at 100MHz
5LN3	2422 549 43769	Bead 30Ω at 100MHz
5LN4	2422 549 44197	Bead 220Ω at 100MHz
5LN5	2422 549 44197	Bead 220Ω at 100MHz
5LN6	2422 549 44197	Bead 220Ω at 100MHz
5LN7	2422 549 44197	Bead 220Ω at 100MHz
5LN8	2422 549 43769	Bead 30Ω at 100MHz
5LN9	2422 549 43769	Bead 30Ω at 100MHz
5M00	2422 549 44197	Bead 220Ω at 100MHz
5M01	2422 549 44197	Bead 220Ω at 100MHz
5M02	2422 549 44197	Bead 220Ω at 100MHz
5M03	2422 549 44197	Bead 220Ω at 100MHz
5M04	2422 549 44197	Bead 220Ω at 100MHz
5M05	3198 018 90050	Bead 1kΩ at 100MHz
5M06	2422 549 44197	Bead 220Ω at 100MHz
5M07	2422 549 44197	Bead 220Ω at 100MHz
5M08	2422 549 44197	Bead 220Ω at 100MHz
5M09	2422 549 44197	Bead 220Ω at 100MHz
5M10	2422 549 42896	Bead 120Ω 100MHz
5M11	2422 549 42896	Bead 120Ω 100MHz
5M12	4822 051 30109	10Ω 5% 0.062W
5M14	2422 549 42896	Bead 120Ω 100MHz
5M15	2422 549 42896	Bead 120Ω 100MHz
5M17	2422 549 42896	Bead 120Ω 100MHz
5M18	2422 549 42896	Bead 120Ω 100MHz
5M19	2422 549 42896	Bead 120Ω 100MHz
5M20	2422 549 42896	Bead 120Ω 100MHz
5M21	2422 549 42896	Bead 120Ω 100MHz
5M23	2422 549 44197	Bead 220Ω at 100MHz
5M24	2422 549 44197	Bead 220Ω at 100MHz
5M25	2422 549 44197	Bead 220Ω at 100MHz
5M26	2422 549 44197	Bead 220Ω at 100MHz
5M27	2422 549 44197	Bead 220Ω at 100MHz
5M28	2422 549 44197	Bead 220Ω at 100MHz
5M29	2422 549 44197	Bead 220Ω at 100MHz
5N00	2422 549 44197	Bead 220Ω at 100MHz
5N01	2422 549 43769	Bead 30Ω at 100MHz
5N02	2422 549 43769	Bead 30Ω at 100MHz
5O00	2422 549 44197	Bead 220Ω at 100MHz
5O01	2422 549 44197	Bead 220Ω at 100MHz
5Q01	2422 549 43769	Bead 30Ω at 100MHz
5Q02	2422 549 43769	Bead 30Ω at 100MHz
5Q03	2422 549 43769	Bead 30Ω at 100MHz
5Q04	2422 549 43769	Bead 30Ω at 100MHz
5Q06	3198 018 52280	2.2µF 10% 1008
5Q20	2422 549 44197	Bead 220Ω at 100MHz
5R00	2422 549 44197	Bead 220Ω at 100MHz
5R01	2422 549 44197	Bead 220Ω at 100MHz
5R02	2422 549 44197	Bead 220Ω at 100MHz
5R03	2422 549 44197	Bead 220Ω at 100MHz
5R04	2422 549 44197	Bead 220Ω at 100MHz
5R05	2422 549 44197	Bead 220Ω at 100MHz
5R06	2422 549 44197	Bead 220Ω at 100MHz
5T01	2422 535 94134	10µH 20% 0805
5T04	2422 549 44197	Bead 220Ω at 100MHz
5T05	2422 549 44197	Bead 220Ω at 100MHz
5T06	2422 549 44197	Bead 220Ω at 100MHz
5T10	2422 549 44197	Bead 220Ω at 100MHz
5T11	2422 549 44197	Bead 220Ω at 100MHz
5T12	4822 157 11716	Bead 30Ω at 100MHz
5U01	2422 536 00779	10µH 20%
5U02	2422 536 00779	10µH 20%
5U03	2422 536 00779	10µH 20%
5U05	2422 536 00671	10µH 20%
5U06	2422 536 00671	10µH 20%
5U09	2422 549 44197	Bead 220Ω at 100MHz
5U10	2422 549 44197	Bead 220Ω at 100MHz
5U11	2422 549 44197	Bead 220Ω at 100MHz
5U12	2422 549 44197	Bead 220Ω at 100MHz
5U13	2422 549 44197	Bead 220Ω at 100MHz
5U14	2422 549 44197	Bead 220Ω at 100MHz
5U15	2422 549 44197	Bead 220Ω at 100MHz
5U17	2422 549 44197	Bead 220Ω at 100MHz
5U18	2422 549 44197	Bead 220Ω at 100MHz
5U19	2422 549 44197	Bead 220Ω at 100MHz
5U21	2422 536 00671	10µH 20%
5V01	2422 549 44197	Bead 220Ω at 100MHz
5W03	2422 549 44197	Bead 220Ω at 100MHz
5W04	2422 549 44197	Bead 220Ω at 100MHz
5W05	2422 549 44197	Bead 220Ω at 100MHz
5W06	4822 157 11716	Bead 30Ω at 100MHz

6A52	9340 552 30115	BA591
6A53	4822 130 11397	BAS316
6B00	9340 566 10115	BAV99S
6B01	4822 130 10328	BAV99W
6B02	4822 130 11416	PDZ6.8B
6B03	4822 130 10328	BAV99W
6B04	4822 130 11416	PDZ6.8B
6B05	4822 130 10328	BAV99W
6B06	4822 130 11416	PDZ6.8B
6B07	4822 130 10328	BAV99W
6B08	4822 130 11416	PDZ6.8B
6B09	4822 130 10328	BAV99W
6B10	4822 130 11416	PDZ6.8B
6B12	9340 566 10115	BAV99S
6B20	4822 130 11397	BAS316
6B21	4822 130 11397	BAS316
6B22	4822 130 11397	BAS316
6B23	4822 130 11397	BAS316
6C52	9340 552 30115	BA591
6C53	4822 130 11397	BAS316
6E25	9340 566 10115	BAV99S
6F01	4822 130 11397	BAS316
6F02	4822 130 11397	BAS316
6F03	4822 130 11397	BAS316
6F04	4822 130 11397	BAS316
6F05	4822 130 11397	BAS316
6F61	4822 130 80622	BAT54
6F62	4822 130 11397	BAS316
6GA1	9322 213 54685	SML-010MTN
6GA3	3198 020 55680	BZX384-C5V6
6H00	9322 213 54685	SML-010MTN
6H01	4822 130 11397	BAS316
6H03	4822 130 11397	BAS316
6I02	4822 130 11416	PDZ6.8B
6I03	4822 130 11416	PDZ6.8B
6I04	4822 130 11416	PDZ6.8B
6I05	4822 130 11416	PDZ6.8B
6I06	4822 130 11416	PDZ6.8B
6I07	4822 130 11416	PDZ6.8B
6I32	4822 130 11416	PDZ6.8B
6I34	4822 130 11416	PDZ6.8B
6I36	4822 130 11416	PDZ6.8B
6I38	4822 130 11416	PDZ6.8B
6I42	4822 130 80622	BAT54
6I43	4822 130 10328	BAV99W
6I44	4822 130 80622	BAT54
6I60	4822 130 10328	BAV99W
6I61	4822 130 11416	PDZ6.8B
6I62	4822 130 10328	BAV99W
6I63	4822 130 11416	PDZ6.8B
6I64	4822 130 11416	PDZ6.8B
6LA0	4822 130 11397	BAS316
6LA1	4822 130 11397	BAS316
6O00	4822 130 11397	BAS316
6O01	4822 130 11397	BAS316
6P10	4822 130 11416	PDZ6.8B
6P11	4822 130 11416	PDZ6.8B
6P12	4822 130 11416	PDZ6.8B
6P13	4822 130 11416	PDZ6.8B
6P14	4822 130 11416	PDZ6.8B
6P15	4822 130 11416	PDZ6.8B
6P16	4822 130 11416	PDZ6.8B
6P17	4822 130 11416	PDZ6.8B
6P18	4822 130 11416	PDZ6.8B
6P19	9322 129 41685	BZM55-C12
6P20	4822 130 11416	PDZ6.8B
6P21	4822 130 11416	PDZ6.8B
6P22	4822 130 11416	PDZ6.8B
6P23	4822 130 11416	PDZ6.8B
6P24	4822 130 11416	PDZ6.8B
6S02	4822 130 11397	BAS316
6T01	9322 208 84685	BZG05C33
6U01	4822 130 11397	BAS316
6U02	4822 130 11397	BAS316
6U03	4822 130 11397	BAS316
6U08	9322 165 17668	STPS2L30A
6U14	4822 130 11397	BAS316
6U15	4822 130 11397	BAS316
6U16	4822 130 11397	BAS316
6U22	9322 213 54685	SML-010MTN
6U23	9322 213 54685	SML-010MTN
6U24	9322 213 54685	SML-010MTN
6U25	9322 213 54685	SML-010MTN
6U26	9340 548 58115	PDZ9.1B
6UB1	4822 130 11416	PDZ6.8B

7A00	9352 767 55557	PNX3000HL/N3
7A01	9340 425 30115	BC847BPN
7A02	3198 010 42310	BC847BW
7A03	9322 185 74668	LM324P
7A04	9322 187 67668	TS482IS
7A54	3198 010 42310	BC847BW
7A55	3198 010 42310	BC847BW
7B00	9340 560 35235	BSH112
7B01	9340 560 35235	BSH112
7B02	9322 206 25668	M24C02-WDW6P
7B03	9322 206 25668	M24C02-WDW6P
7B04	9340 560 35235	BSH112
7B05	9340 560 35235	BSH112
7B11	9352 774 45557	TDA9975EL/8/C1
7B20	9322 217 28668	LD1117DT18
7B30	3198 010 42310	BC847BW
7B31	3198 010 42310	BC847BW
7B38	4822 209 17398	LD1117DT33
7C00	9352 767 55557	PNX3000HL/N3
7C01	9340 425 30115	BC847BPN
7C02	3198 010 42310	BC847BW
7C05	9322 198 11685	L78L08ACU
7C06	9322 198 10685	LD2981CU50
7C31	9340 425 20115	BC847BS
7C54	3198 010 42310	BC847BW
7C55	3198 010 42310	BC847BW
7C56	3198 010 42310	BC847BW
7F01	3198 010 44310	PDTC114EU
7F02	9322 204 63685	NCP303LSN10
7F03	9322 204 63685	NCP303LSN10
7F04	9352 759 98118	PCA9515ADP
7F05	9322 204 63685	NCP303LSN10
7F06	9322 204 63685	NCP303LSN10
7F08	9322 204 63685	NCP303LSN10
7F09	9322 204 63685	NCP303LSN10
7F10	9352 759 98118	PCA9515ADP
7F11	9322 206 22668	M24C64-WDW6P
7F12	3198 010 42310	BC847BW
7F13	3198 010 44310	PDTC114EU
7F14	9351 749 10118	74HC4016PW
7F15	9322 204 63685	NCP303LSN10
7F16	3198 010 42310	BC847BW
7F17	3198 010 44310	PDTC114EU
7F18	9322 146 75685	TS431L
7F19	3198 010 42310	BC847BW
7F20	9322 146 75685	TS431L
7F21	3198 010 42320	BC857BW
7F50	9352 115 40118	74LVC245APW
7F51	9352 115 40118	74LVC245APW
7F52	9352 115 40118	74LVC245APW
7F53	9322 206 61671	TC58DVM82F1TGI0
7F54	9322 212 46668	CY2305SXC-1
7F55	9340 425 30115	BC847BPN
7F60	3198 010 42320	BC857BW
7F61	9340 425 20115	BC847BS
7G00	9322 214 08685	LD2985BM25
7G01	9322 144 97668	LD1117DT
7G02	9340 425 20115	BC847BS
7G03	9322 210 01668	EPCS4SI8N
7G04	9322 226 67671	EP1C12F256C7N
7G66	9340 425 20115	BC847BS
7GA2	3198 010 42310	BC847BW
7GA5	9322 204 71668	SI4835BDY
7I90	9351 884 80118	74HCT4053PW
7I94	9351 875 80118	74HCU04PW
7J00	9352 783 28557	PNX2015E/M1C02
7L40	9340 560 35235	BSH112
7L50	9322 204 09671	K4D261638F-LC40
7L51	9340 425 30115	BC847BPN
7L52	9340 425 30115	BC847BPN
7LA2	3198 010 42310	BC847BW
7LA3	3198 010 42310	BC847BW
7LA4	3198 010 42310	BC847BW
7LA5	9352 687 21165	74LVC1G126GW
7LA7	9322 206 45668	M25P05-AVMN6P
7M01	9340 425 30115	BC847BPN
7M02	3198 010 42310	BC847BW
7M03	9340 575 87118	PHD38N02LT
7M04	9322 213 50685	TS431AIL
7M05	9340 425 30115	BC847BPN
7M10	5322 130 60159	BC846B
7M12	3198 010 44310	PDTC114EU
7N00	9352 698 49518	ISP1561BM
7O00	9322 191 29671	DP83816AVNG
7P87	9340 425 20115	BC847BS
7R00	9322 223 87671	T6TE0TBG-0001
7R01	9322 214 25671	IC K4H561638F-UCB3
7R04	3198 010 42310	BC847BW
7S00	9340 425 30115	BC847BPN
7S03	3198 010 44350	BC807-25W

7S05	9340 425 30115	BC847BPN
7S06	3198 010 44350	BC807-25W
7S08	9340 425 30115	BC847BPN
7S11	9340 219 30115	BC817-25W
7S12	9340 219 30115	BC817-25W
7S24	3198 010 42320	BC857BW
7T02	9322 104 47668	L78M05CDT
7T06	5322 130 42718	BFS20
7T10	3198 010 42310	BC847BW
7U01	9322 160 70668	SI4936ADY
7U02	9322 160 70668	SI4936ADY
7U03	9322 160 70668	SI4936ADY
7U04	9322 182 77668	L6910
7U05	9322 182 77668	L6910
7U06	9322 182 77668	L6910
7U08	9340 425 20115	BC847BS
7U09	9340 425 20115	BC847BS
7U10	9340 425 20115	BC847BS
7U20	9340 425 30115	BC847BPN
7U23	3198 010 42310	BC847BW
7U25	9340 575 87118	PHD38N02LT
7U26	9322 192 16685	TS2431AI
7UB1	9340 425 10115	BC857BS
7V00	9352 787 87557	PNX8550EH/M1/S1
7V01	9322 221 77671	K4D551638F-LC40
7V02	9322 221 77671	K4D551638F-LC40
7W01	5322 130 42718	BFS20
7W10	3198 010 42310	BC847BW

External I/O Panel [BE]

-WW-

3O04	4822 051 30223	22kΩ 5% 0.062W
3O05	4822 051 30223	22kΩ 5% 0.062W
3O06	4822 051 30689	68Ω 5% 0.063W 0603
3O08	4822 051 30472	4.7Ω 5% 0.062W
3O09	4822 051 30223	22kΩ 5% 0.062W
3O10	4822 051 30223	22kΩ 5% 0.062W
3O11	4822 051 30102	1kΩ 5% 0.062W
3O13	4822 117 12925	47kΩ 1% 0.063W 0603
3O14	4822 051 30102	1kΩ 5% 0.062W
3O16	3198 021 38220	8.2kΩ 5% 0.062W 0603
3O17	4822 051 30332	3.3Ω 5% 0.062W
3O18	4822 117 13632	100kΩ 1% 0603 0.62W
3O20	4822 117 12925	47kΩ 1% 0.063W 0603
3O21	4822 117 13632	100kΩ 1% 0603 0.62W
3O23	4822 051 30102	1kΩ 5% 0.062W
3O24	4822 117 13632	100kΩ 1% 0603 0.62W
3O25	4822 051 30223	22kΩ 5% 0.062W
3O26	4822 051 30101	100Ω 5% 0.062W
3O29	4822 051 30223	22kΩ 5% 0.062W
3O33	4822 051 30223	22kΩ 5% 0.062W
3O34	4822 117 13632	100kΩ 1% 0603 0.62W
3O37	4822 051 30681	680Ω 5% 0.062W
3O40	4822 051 30101	100Ω 5% 0.062W
3O44	4822 051 30101	100Ω 5% 0.062W
3O49▲	4822 117 11151	1Ω 5%
3O51	4822 051 30759	75Ω 5% 0.062W
3O52	4822 051 30689	68Ω 5% 0.063W 0603
3O55	4822 051 30759	75Ω 5% 0.062W
3O60	4822 051 30102	1kΩ 5% 0.062W
3O61	4822 051 30759	75Ω 5% 0.062W
3O62	4822 051 30759	75Ω 5% 0.062W
3O63	4822 051 30101	100Ω 5% 0.062W
3O64	4822 051 30101	100Ω 5% 0.062W
3O66	4822 051 30101	100Ω 5% 0.062W
3O69	4822 051 30689	68Ω 5% 0.063W 0603
3O72	4822 051 30101	100Ω 5% 0.062W
3O74	4822 051 30101	100Ω 5% 0.062W
3O75	4822 051 30102	1kΩ 5% 0.062W
3O76	4822 051 30101	100Ω 5% 0.062W
3O77	4822 051 30102	1kΩ 5% 0.062W
3O78	4822 051 30101	100Ω 5% 0.062W
3O79	4822 051 30102	1kΩ 5% 0.062W
3O81	4822 051 30102	1kΩ 5% 0.062W
3O82	4822 051 30151	150Ω 5% 0.062W
3O83	4822 051 30102	1kΩ 5% 0.062W
3O97	4822 051 30151	150Ω 5% 0.062W

⌐⌐

5O00	4822 157 11716	Bead 30Ω at 100MHz

⊣▷⊢

6O02	9322 129 41685	BZM55-C12
6O04	4822 130 11416	PDZ6.8B
6O05	4822 130 11397	BAS316
6O06	4822 130 11397	BAS316
6O08	4822 130 11416	PDZ6.8B
6O10	4822 130 11416	PDZ6.8B
6O12	4822 130 11416	PDZ6.8B
6O14	4822 130 11416	PDZ6.8B
6O16	4822 130 11416	PDZ6.8B
6O18	4822 130 11397	BAS316
6O19	4822 130 11416	PDZ6.8B
6O21	4822 130 11416	PDZ6.8B
6O24	4822 130 11416	PDZ6.8B
6O31	4822 130 11416	PDZ6.8B
6O33	4822 130 11416	PDZ6.8B
6O34	4822 130 11416	PDZ6.8B
6O35	4822 130 11416	PDZ6.8B
6O36	4822 130 11416	PDZ6.8B
6O37	4822 130 11416	PDZ6.8B
6O38	9322 102 64685	UDZ2.7B

7O00	9351 869 40118	74HC4053PW
7O01	5322 130 60159	BC846B
7O02	5322 130 60159	BC846B
7O03	5322 130 60159	BC846B
7O04	5322 130 60159	BC846B
7O05	5322 130 60159	BC846B
7O06	5322 130 60159	BC846B
7O07	5322 130 60159	BC846B
7O10	9351 869 40118	74HC4053PW
7O12	5322 130 60159	BC846B
7O15	5322 130 60159	BC846B
7O24	5322 130 60159	BC846B
7O25	5322 130 60159	BC846B

Side I/O Panel [D]

Various

1001	2422 026 05133	Connector SVHS 4p f
1002	4822 267 10975	Soc. CINCH f YeWhRd
1010	4822 267 31014	Soc. headphone
1M36	2422 025 17179	Connector 11p m

⊣⊢

2003	2022 552 05679	1µF 10% 16V 0805
2004	3198 016 36810	680pF 25V 0603
2005	2020 552 94427	100pF 5% 50V
2006	3198 016 36810	680pF 25V 0603
2007	2020 552 94427	100pF 5% 50V
2008	2238 916 15641	22nF 10% 25V 0603
2009	5322 126 11583	10nF 10% 50V 0603
2010	2238 916 15641	22nF 10% 25V 0603
2011	5322 126 11583	10nF 10% 50V 0603

-WW-

3000	4822 051 30759	75Ω 5% 0.062W
3004	4822 051 30759	75Ω 5% 0.062W
3008	4822 051 30222	2.2kΩ 5% 0.062W
3009	4822 051 30102	1kΩ 5% 0.062W
3010	4822 051 30333	33kΩ 5% 0.062W
3011	4822 051 30392	3.9Ω 5% 0.063W 0603
3012	4822 051 30102	1kΩ 5% 0.062W
3013	4822 051 30333	33kΩ 5% 0.062W
3016	4822 051 30103	10kΩ 5% 0.062W
3020	4822 051 30103	10kΩ 5% 0.062W
9004	4822 051 30008	Jumper 0603
9005	4822 051 30008	Jumper 0603
9006	4822 051 30008	Jumper 0603
9007	4822 051 30008	Jumper 0603
9008	4822 051 30008	Jumper 0603
9009	4822 051 30008	Jumper 0603
9010	4822 051 30008	Jumper 0603
9011	4822 051 30008	Jumper 0603

⊣▷⊢

6000	4822 130 11416	PDZ6.8B
6001	4822 130 11416	PDZ6.8B
6002	4822 130 11416	PDZ6.8B
6003	4822 130 11416	PDZ6.8B
6004	4822 130 11416	PDZ6.8B
6005	4822 130 11416	PDZ6.8B
6006	4822 130 11416	PDZ6.8B
6007	4822 130 11416	PDZ6.8B
6008	4822 130 11416	PDZ6.8B
6009	4822 130 11416	PDZ6.8B
6010	4822 130 11416	PDZ6.8B
6011	4822 130 11416	PDZ6.8B

Top Contol Panel [E]

Various

0345	2422 025 18753	Connector 6p m
1701	2422 128 02742	Switch tact SKQNAB
1702	2422 128 02742	Switch tact SKQNAB
1703	2422 128 02742	Switch tact SKQNAB
1704	2422 128 02742	Switch tact SKQNAB
1705	2422 128 02742	Switch tact SKQNAB
1710	2422 128 00119	Switch 2p 0.1A 12V
8345	3104 311 07041	Cable 6p/1000/6p

-WW-

3008	2322 734 66201	620Ω 1% 0805
3010	2322 734 61102	1.1kΩ 1% 0805
3011	2322 734 62002	2kΩ 1% 0805
3013	2322 734 62001	200Ω 1% 0805
3014	3198 031 03910	390Ω 1% 0402
3017	3198 021 33390	33Ω 5% 0.062W 0603
3018	3198 021 33390	33Ω 5% 0.062W 0603
3019	3198 021 33390	33Ω 5% 0.062W 0603
3020	3198 021 33390	33Ω 5% 0.062W 0603
3021	3198 021 33390	33Ω 5% 0.062W 0603
3022	3198 021 33390	33Ω 5% 0.062W 0603
3023	3198 021 33390	33Ω 5% 0.062W 0603
3024	3198 021 33390	33Ω 5% 0.062W 0603
3025	3198 021 33390	33Ω 5% 0.062W 0603
3026	3198 021 33390	33Ω 5% 0.062W 0603
3027	3198 021 33390	33Ω 5% 0.062W 0603
3028	3198 021 33390	33Ω 5% 0.062W 0603
3999	3198 031 02220	2.2kΩ 5% 0402
9000	3198 031 90010	Jumper 0402
9001	3198 031 90010	Jumper 0402
9002	3198 031 90010	Jumper 0402

LED Panel [J]

Various

1040	9322 206 81667	TSOP34836YA1
1M01	2422 025 17103	Conn. 3p m SMD
1M01	2422 025 18738	Conn. 3p m SMD no-Pb
1M20	2422 025 17441	Conn. 12p m SMD
1M20	2422 025 18736	Conn. 12p m SMD no-Pb

⊣⊢

2030	4822 124 23002	10µF 16V
2040	4822 124 12095	100µF 20% 16V
2060	5322 124 41945	22µF 20% 35V
2070	4822 126 14583	470nF 10% 16V 0805
2071	4822 124 23002	10µF 16V

-WW-

3011	4822 117 13545	100Ω 1% 0402
3020	4822 117 13606	10kΩ 5% 0.01W 0402
3030	3198 031 04720	4.7kΩ 5% 0402
3031	4822 117 11297	100kΩ 5% 0.1W
3031	4822 117 12889	270kΩ 1% 0.063W 0603
3031	4822 117 13632	100kΩ 1% 0603 0.62W
3032	2322 705 70184	180Ω 5% 0402
3033	4822 051 30102	1kΩ 5% 0.062W
3033	4822 117 13548	1kΩ 5% 0402
3034	4822 117 13548	1kΩ 5% 0402
3035	3198 031 04720	4.7kΩ 5% 0402
3036	3198 031 02280	2.2Ω 5% 0.1W 0402
3037	3198 031 02280	2.2Ω 5% 0.1W 0402
3040	4822 117 13597	330Ω 5% 0.01W 0402
3041	4822 117 13606	10kΩ 5% 0.01W 0402
3042	3198 031 06820	6.8kΩ 5% 0.01W 0402
3051	4822 117 13597	330Ω 5% 0.01W 0402
3060	4822 117 13606	10kΩ 5% 0.01W 0402
3061	4822 051 30331	330Ω 5% 0.062W
3062	4822 117 11373	100Ω 1% 0805
3063	4822 117 13606	10kΩ 5% 0.01W 0402
3064	4822 117 11373	100Ω 1% 0805
3070	2322 705 70475	4.7MΩ 5% 0402
3071	2322 705 70475	4.7MΩ 5% 0402
3072	4822 117 13548	1kΩ 5% 0402
3073	3198 031 03320	3.3kΩ 5% 0402
3074	4822 117 13606	10kΩ 5% 0.01W 0402
3075	3198 031 04720	4.7kΩ 5% 0402
3076	3198 031 03320	3.3kΩ 5% 0402
3077	3198 031 03320	3.3kΩ 5% 0402
3078	3198 031 03320	3.3kΩ 5% 0402
3079	3198 031 03320	3.3kΩ 5% 0402

3091	4822 117 13606	10kΩ 5% 0.01W 0402
3093	4822 117 13606	10kΩ 5% 0.01W 0402
3096	4822 117 13606	10kΩ 5% 0.01W 0402
3999	3198 031 04720	4.7kΩ 5% 0402
9010	4822 117 13605	Jumper 0402
9012	4822 117 13605	Jumper 0402
9013	4822 117 13605	Jumper 0402
9014	4822 117 13605	Jumper 0402
9015	4822 117 13605	Jumper 0402
9016	4822 117 13605	Jumper 0402
9017	4822 117 13605	Jumper 0402
9019	4822 117 13605	Jumper 0402
9022	4822 051 30008	Jumper 0603
9024	4822 051 30008	Jumper 0603
9026	4822 117 13605	Jumper 0402
9027	4822 117 13605	Jumper 0402
9040	4822 117 13605	Jumper 0402
9041	4822 117 13605	Jumper 0402
9042	4822 117 13605	Jumper 0402
9043	4822 117 13605	Jumper 0402
9044	4822 117 13605	Jumper 0402
9050	4822 117 13605	Jumper 0402
9060	4822 117 13605	Jumper 0402
9081	4822 117 13605	Jumper 0402
9082	4822 117 13605	Jumper 0402

6030	4822 130 11397	BAS316
6031	4822 130 11397	BAS316
6051	4822 130 11395	TLMH3100
6051	4822 130 83915	TLMV3100
6060	9322 208 45685	SML512BC4TL
6061	4822 130 11397	BAS316
6070	9322 140 63685	TEMD5000

7030	3198 010 42320	BC857BW
7031	5322 130 62804	BCP53
7032	3198 010 42310	BC847BW
7060	3198 010 42310	BC847BW
7061	3198 010 42310	BC847BW
7070	9322 192 63668	LM358P

Standby/Audio Panel [SA]

Various

1303	2422 025 04475	Connector 4p m
1304	2422 025 10647	Connector 4p m
1305	4822 267 10735	Connector 3p
1306▲	2422 025 16374	Connector 2p m
1307	2422 025 10647	Connector 4p m
1309	2422 025 11143	Connector 3p m
1314	2422 025 10771	Connector 10p m
1315	2422 025 10771	Connector 10p m
1316	2422 025 10772	Connector 12p m
1317	2422 025 10772	Connector 12p m
1318	2422 025 08149	Connector 6p m
1320	2422 025 11143	Connector 3p m
1735	4822 267 10918	Connector 3p
1736	2422 025 10768	Connector 3p m
1738	2422 025 10768	Connector 3p m
1739	2422 025 10769	Connector 9p m
1D40	4822 267 10637	Connector 5p
1D42	4822 267 10637	Connector 5p
1K49	2422 025 18884	Connector 4p m
1M02	2422 025 11244	Connector 7p m
1M03	2422 025 10771	Connector 10p m
1M10	2422 025 09406	Connector 4p m
1M46	2422 025 10655	Connector 11p m
1M49	2422 025 18884	Connector 4p m
1M63	2422 025 09405	Connector 2p m

2101	4822 121 51598	2.2nF 5% 400V
2102	4822 124 40207	100µF 20% 25V
2103	2020 552 94427	100pF 5% 50V
2105	2020 552 94427	100pF 5% 50V
2109	4822 126 14583	470nF 10% 16V 0805
2110	2022 552 05679	1µF 10% 16V 0805
2111	4822 121 43526	47nF 5% 250V
2112	5322 126 11583	10nF 10% 50V 0603
2123	2238 586 59812	100nF 20% 50V 0603
2124	4822 124 40248	10µF 20% 63V
2129	5322 126 11578	1nF 10% 50V 0603
2131	2238 586 15641	22nF 10% 50V 0603
2132	4822 124 40207	100µF 20% 25V
2140	4822 124 40248	10µF 20% 63V
2141	4822 126 14583	470nF 10% 16V 0805
2144	2022 552 05679	1µF 10% 16V 0805
2145	4822 126 13881	470pF 5% 50V
2149	4822 126 14583	470nF 10% 16V 0805
2150	4822 124 12379	220µF 25V
2152	4822 121 70162	10nF 5% 400V
2153	5322 126 11582	6.8nF 10% 63V
2154	3198 017 31530	15nF 20% 50V 0603
2160	4822 124 21913	1µF 20% 63V
2163	4822 124 40207	100µF 20% 25V
2506▲	2252 811 95017	470pF 10% 250V
2507	4822 126 13682	100pF 5% 1kV
2508	4822 124 40764	22µF 100V
2510	2020 021 91668	2200µF 20% 10V
2511	4822 124 12379	220µF 25V
2512	4822 124 80061	1000µF 20% 25V
2513	2222 930 56627	2.2nF 10% 200V 0805
2515	4822 126 14238	2.2nF 50V 0603
2533	4822 124 40207	100µF 20% 25V
2534	2022 552 05679	1µF 10% 16V 0805
2535	5322 126 11583	10nF 10% 50V 0603
2536	5322 126 11583	10nF 10% 50V 0603
2537	4822 126 14238	2.2nF 50V 0603
2538	5322 126 11583	10nF 10% 50V 0603
2539	2022 552 05679	1µF 10% 16V 0805
2540	5322 126 11583	10nF 10% 50V 0603
2544	5322 126 11583	10nF 10% 50V 0603
2702	5322 126 11578	1nF 10% 50V 0603
2704	5322 126 11578	1nF 10% 50V 0603
2705	2020 552 96684	470nF 10% 25V 0805
2706	2222 580 15649	100nF 10% 50V 0805
2707	4822 126 14585	100nF 10% 0805 50V
2708	2020 552 96326	220nF 10% 16V
2709	4822 126 13881	470pF 5% 50V
2710	4822 126 13881	470pF 5% 50V
2711	5322 126 11578	1nF 10% 50V 0603
2712	2020 552 96683	220nF 10% 50V
2713	2020 552 96684	470nF 10% 25V 0805
2714	3198 017 33330	33nF 20% 16V 0603
2715	5322 126 11578	1nF 10% 50V 0603
2716	4822 126 14241	330pF 0603 50V
2717	5322 121 42498	680nF 5% 63V
2718	4822 122 33761	22pF 5% 50V
2719	5322 126 11578	1nF 10% 50V 0603
2720	2020 552 96326	220nF 10% 16V
2721	4822 126 13881	470pF 5% 50V
2722	4822 126 13881	470pF 5% 50V
2723	5322 126 11578	1nF 10% 50V 0603
2725	2020 552 94427	100pF 5% 50V
2726	3198 017 33330	33nF 20% 16V 0603
2727	5322 126 11578	1nF 10% 50V 0603
2728	4822 126 14241	330pF 0603 50V
2729	5322 121 42498	680nF 5% 63V
2741	4822 122 33761	22pF 5% 50V
2743	4822 126 12105	33nF 5% 50V 0805
2753	2020 552 96326	220nF 10% 16V
2754	4822 126 14491	2.2µF 10V 0805
2755	5322 126 11578	1nF 10% 50V 0603
2756	4822 126 13881	470pF 5% 50V
2758	5322 121 42498	680nF 5% 63V
2759	5322 126 10511	1nF 5% 50V
2762	2020 552 96326	220nF 10% 16V
2764	4822 126 14585	100nF 10% 0805 50V
2766	4822 126 14585	100nF 10% 0805 50V
2768	4822 124 40255	100µF 20% 63V
2769	4822 124 40255	100µF 20% 63V
2777	2020 552 96683	220nF 10% 50V
2778	4822 124 40769	4.7µF 20% 100V
2779	2020 552 96683	220nF 10% 50V
2780	2020 552 96683	220nF 10% 50V
2781	2020 552 96683	220nF 10% 50V
2782	2020 552 96683	220nF 10% 50V
2783	4822 124 41751	47µF 20% 50V
2784	2020 552 96683	220nF 10% 50V
2786	2238 586 15641	22nF 10% 50V 0603
2788	4822 124 40255	100µF 20% 63V
2789	2020 552 96683	220nF 10% 50V
2790	4822 124 40255	100µF 20% 63V
2791	2022 552 05679	1µF 10% 16V 0805
2792	2022 552 05679	1µF 10% 16V 0805
2793	4822 124 40255	100µF 20% 63V
2794	2022 552 05679	1µF 10% 16V 0805
2795	2020 552 96683	220nF 10% 50V
2796	2022 552 05679	1µF 10% 16V 0805
2797	4822 126 14076	220nF +80/-20% 25V
2798	4822 126 14076	220nF +80/-20% 25V
2799	4822 124 40255	100µF 20% 63V

3100	4822 051 30101	100Ω 5% 0.062W
3101	4822 053 20475	4.7MΩ 5% 0.25W
3102	2312 915 11002	1kΩ 1% 0.5W
3103	2312 915 11002	1kΩ 1% 0.5W
3104	3198 021 32290	22Ω 5% 0603
3104	9965 000 23109	22Ω 5% 0603
3105	4822 051 30221	220Ω 5% 0.062W
3106	4822 051 30391	390Ω 5% 0.062W
3107	4822 051 30391	390Ω 5% 0.062W
3108	4822 053 10478	4.7Ω 5% 1W
3109	4822 051 30391	390Ω 5% 0.062W
3110	4822 051 30391	390Ω 5% 0.062W
3111	4822 053 10152	1.5kΩ 5% 1W
3112	4822 051 30391	390Ω 5% 0.062W
3113	3198 021 32290	22Ω 5% 0603
3113	9965 000 23109	22Ω 5% 0603
3114	4822 051 30221	220Ω 5% 0.062W
3117	4822 051 30479	47Ω 5% 0.062W
3122	4822 051 30471	470Ω 5% 0.062W
3123	4822 051 30109	10Ω 5% 0.062W
3124	4822 051 30339	33Ω 5% 0.062W
3125	4822 117 12971	15Ω 5% 0603 0.62W
3126	4822 051 30103	10kΩ 5% 0.062W
3127	4822 051 30562	5.6kΩ 5% 0.063W 0603
3128	4822 117 13608	4.7Ω 5% 0603 0.62W
3132	4822 051 30333	33kΩ 5% 0.062W
3134	4822 051 30102	1kΩ 5% 0.062W
3135	4822 051 30331	330Ω 5% 0.062W
3138	4822 051 30105	1MΩ 5% 0.062W
3140	4822 051 30223	22kΩ 5% 0.062W
3141	4822 051 30471	470Ω 5% 0.062W
3145	4822 051 30472	4.7Ω 5% 0.062W
3146	4822 051 30479	47Ω 5% 0.062W
3147	4822 051 30223	22kΩ 5% 0.062W
3148	4822 051 30479	47Ω 5% 0.062W
3149	4822 051 30103	10kΩ 5% 0.062W
3150	4822 051 30101	100Ω 5% 0.062W
3152	4822 051 30102	1kΩ 5% 0.062W
3153	4822 051 30223	22kΩ 5% 0.062W
3155	4822 050 21003	10kΩ 1% 0.6W
3156	4822 051 30102	1kΩ 5% 0.062W
3157	4822 051 30223	22kΩ 5% 0.062W
3158	4822 051 30479	47Ω 5% 0.062W
3159	4822 051 30479	47Ω 5% 0.062W
3160	4822 051 30102	1kΩ 5% 0.062W
3161	4822 051 30123	12kΩ 5% 0.1W
3171	4822 051 30101	100Ω 5% 0.062W
3172	4822 051 30333	33kΩ 5% 0.062W
3175	4822 051 30103	10kΩ 5% 0.062W
3176	4822 051 30103	10kΩ 5% 0.062W
3190	4822 053 10122	1.2kΩ 5% 1W
3191	4822 053 10122	1.2kΩ 5% 1W
3192	4822 053 10122	1.2kΩ 5% 1W
3509	4822 053 10222	2.2kΩ 5% 1W
3511	4822 051 30683	68kΩ 5% 0.062W
3512	4822 051 30471	470Ω 5% 0.062W
3513	4822 051 30333	33kΩ 5% 0.062W
3515	4822 117 13632	100kΩ 1% 0603 0.62W
3516	4822 051 30472	4.7Ω 5% 0.062W
3517	4822 051 30223	22kΩ 5% 0.062W
3528	4822 051 30472	4.7Ω 5% 0.062W
3529	4822 051 30101	100Ω 5% 0.062W
3531	4822 051 30153	15kΩ 5% 0.062W
3532	4822 051 30472	4.7Ω 5% 0.062W
3533	4822 051 30152	1.5Ω 5% 0.062W
3534	4822 051 30103	10kΩ 5% 0.062W
3538	4822 051 30101	100Ω 5% 0.062W
3539	4822 051 30471	470Ω 5% 0.062W
3540	4822 051 30222	2.2kΩ 5% 0.062W
3541	4822 051 30222	2.2kΩ 5% 0.062W
3542	4822 051 30103	10kΩ 5% 0.062W
3543	4822 051 30223	22kΩ 5% 0.062W
3544	4822 051 30101	100Ω 5% 0.062W
3544	4822 051 30221	220Ω 5% 0.062W
3560	3198 021 31820	1.8kΩ 5% 0.062W 0603
3560	4822 051 30682	6.8Ω 5% 0.062W
3561	4822 051 30392	3.9Ω 5% 0.063W 0603
3561	4822 051 30471	470Ω 5% 0.062W
3562	4822 117 13608	4.7Ω 5% 0603 0.62W
3701	4822 051 30103	10kΩ 5% 0.062W
3702	4822 051 30682	6.8Ω 5% 0.062W
3703	4822 051 30333	33kΩ 5% 0.062W
3704	4822 117 10833	10kΩ 1% 0.1W
3705	4822 051 20828	8.2Ω 5% 0.1W
3706	4822 051 30472	4.7Ω 5% 0.062W
3707	4822 051 30683	68kΩ 5% 0.062W
3708	4822 051 30563	56kΩ 5% 0.062W
3709	4822 117 11503	220Ω 1% 0.1W
3710	4822 051 30223	22kΩ 5% 0.062W
3711	4822 050 21204	120kΩ 1% 0.6W
3712	4822 051 30103	10kΩ 5% 0.062W
3713	2312 915 11202	1.2kΩ 1% 0.5W
3714	4822 117 12925	47kΩ 1% 0.063W 0603
3715	4822 117 12925	47kΩ 1% 0.063W 0603
3716	4822 117 12925	47kΩ 1% 0.063W 0603
3717	4822 117 13632	100kΩ 1% 0603 0.62W

3718	4822 117 13632	100kΩ 1% 0603 0.62W
3720	4822 117 11503	220Ω 1% 0.1W
3721	4822 051 30472	4.7Ω 5% 0.062W
3722	4822 051 30683	68kΩ 5% 0.062W
3723	4822 051 30563	56kΩ 5% 0.062W
3724	4822 117 11503	220Ω 1% 0.1W
3725	4822 051 30223	22kΩ 5% 0.062W
3726	4822 117 11503	220Ω 1% 0.1W
3727	4822 117 11503	220Ω 1% 0.1W
3729	4822 117 10837	100kΩ 1% 0.1W
3730	4822 117 11503	220Ω 1% 0.1W
3741	4822 051 30103	10kΩ 5% 0.062W
3743	4822 117 11449	2.2kΩ 5% 0.1W 0805
3744	4822 117 13632	100kΩ 1% 0603 0.62W
3746	4822 051 30223	22kΩ 5% 0.062W
3747	4822 050 21004	100kΩ 1% 0.6W
3748	4822 051 30471	47Ω 5% 0.062W
3749	4822 051 30471	47Ω 5% 0.062W
3750	4822 117 11449	2.2kΩ 5% 0.1W 0805
3751	4822 117 11449	2.2kΩ 5% 0.1W 0805
3752	4822 051 30331	330Ω 5% 0.062W
3753	4822 117 11449	2.2kΩ 5% 0.1W 0805
3754	4822 051 30223	22kΩ 5% 0.062W
3755	4822 051 30471	47Ω 5% 0.062W
3756	4822 117 11449	2.2kΩ 5% 0.1W 0805
3757	4822 117 11449	2.2kΩ 5% 0.1W 0805
3758	3198 021 38220	8.2kΩ 5% 0.062W 0603
3759	4822 051 30332	3.3Ω 5% 0.062W
3760	4822 051 30332	3.3Ω 5% 0.062W
3761	4822 051 20109	10Ω 5% 0.1W
3762	4822 051 30222	2.2kΩ 5% 0.062W
3763	4822 051 30222	2.2kΩ 5% 0.062W
3764	4822 051 20109	10Ω 5% 0.1W
3765	4822 051 30103	10kΩ 5% 0.062W
3766	4822 117 13632	100kΩ 1% 0603 0.62W
3767	4822 117 13632	100kΩ 1% 0603 0.62W
3768	4822 117 13632	100kΩ 1% 0603 0.62W
3790	4822 051 30272	2.7kΩ 5% 0.062W
3791	4822 051 30272	2.7kΩ 5% 0.062W
3792	4822 051 30183	18kΩ 5% 0.062W
3793	4822 051 30183	18kΩ 5% 0.062W
3794	4822 051 30563	56kΩ 5% 0.062W
3796	4822 051 30332	3.3Ω 5% 0.062W
3798	4822 051 30153	15kΩ 5% 0.062W
3999	4822 051 30102	1kΩ 5% 0.062W
3999	4822 051 30222	2.2kΩ 5% 0.062W
9041	4822 051 20008	Jumper 0805
9042	4822 051 20008	Jumper 0805
9044	4822 051 20008	Jumper 0805
9080	4822 051 20008	Jumper 0805
9081	4822 051 20008	Jumper 0805

5102	4822 526 10704	Bead 50 Ω at 100MHz
5103	4822 526 10704	Bead 50 Ω at 100MHz
5104	4822 157 11411	Bead 80Ω at 100MHz
5105	2422 549 43769	Bead 30Ω at 100MHz
5106	4822 157 11441	22µH 5%
5108	4822 526 10704	Bead 50 Ω at 100MHz
5110	4822 157 71736	10µH 5%
5500▲	3104 308 21181	Transf. BS25320-00
5504	2422 536 00776	33µH 10%
5505	4822 157 11411	Bead 80Ω at 100MHz
5506	4822 157 11411	Bead 80Ω at 100MHz
5507	2422 536 00433	15µH 10%
5701	2422 536 00951	68µH 20% LHL10
5702	2422 536 00951	68µH 20% LHL10
5703	4822 157 11716	Bead 30Ω at 100MHz
5704	4822 157 11411	Bead 80Ω at 100MHz
5705	4822 157 11716	Bead 30Ω at 100MHz
5707	4822 157 11411	Bead 80Ω at 100MHz
5708	4822 157 11411	Bead 80Ω at 100MHz
5711	4822 157 11411	Bead 80Ω at 100MHz
5712	4822 157 11411	Bead 80Ω at 100MHz
5720	2422 536 00951	68µH 20% LHL10
5722	4822 157 11411	Bead 80Ω at 100MHz
5723	4822 157 11411	Bead 80Ω at 100MHz
5730	2422 549 00112	Line filt. 50V 3A
5731	2422 549 00112	Line filt. 50V 3A
5732	2422 549 00112	Line filt. 50V 3A

6103	4822 130 10871	SBYV27-200
6103	5322 130 31938	BYV27-200
6104	9340 548 69115	PDZ27B
6105	4822 130 11522	UDZ15B
6106	9340 548 67115	PDZ22B
6107	4822 130 11572	STPS8H100F
6108	4822 130 80622	BAT54
6114	4822 130 10871	SBYV27-200
6114	5322 130 31938	BYV27-200
6115	4822 130 80622	BAT54
6116	3198 020 55680	BZX384-C5V6
6120	4822 130 11397	BAS316
6121	4822 130 11397	BAS316
6122	9322 129 34685	BZM55-C3V9
6130	9322 129 41685	BZM55-C12
6132	4822 130 11416	PDZ6.8B
6133	4822 130 11397	BAS316
6134	4822 130 11397	BAS316
6140	4822 130 83755	BYW36
6142	4822 130 80622	BAT54
6144	4822 130 11397	BAS316
6147	9322 208 44685	BZG05C6V8
6148	4822 130 11397	BAS316
6149	3198 020 55680	BZX384-C5V6
6150	9340 292 50135	BZG03-C200
6151	9340 548 71115	PDZ33B
6153	9340 292 50135	BZG03-C200
6156	4822 130 11397	BAS316
6504	9322 203 12673	BYV27-600
6511	9322 129 41685	BZM55-C12
6531	4822 130 11522	UDZ15B
6532	4822 130 11397	BAS316
6540	4822 130 80622	BAT54
6562	9340 548 67115	PDZ22B
6701	4822 130 11397	BAS316
6702	4822 130 11551	UDZS10B
6703	4822 130 11551	UDZS10B
6710	4822 130 11522	UDZ15B
6711	4822 130 11522	UDZ15B

7100	3198 010 42320	BC857BW
7101	9340 219 30115	BC817-25W
7102	9322 160 34687	FQPF3N60
7105	3198 010 42320	BC857BW
7131	9340 557 69127	PHX9NQ20T
7140	3198 010 42310	BC847BW
7150▲	9322 149 04682	TCET1102
7501▲	9322 149 04682	TCET1102
7505	3198 010 42320	BC857BW
7506	3198 010 42310	BC847BW
7507	3198 010 42310	BC847BW
7509	3198 010 42310	BC847BW
7511	9337 331 10215	BST82
7512	9340 422 80115	PMSTA42
7531	9340 436 50115	BSP030
7532	3198 010 42310	BC847BW
7560	9340 219 30115	BC817-25W
7700	9322 163 86682	TDA7490L
7701	3198 010 42310	BC847BW
7702	9322 147 23682	TDA7481
7703	3198 010 42310	BC847BW
7704	3198 010 42310	BC847BW
7705	3198 010 42310	BC847BW
7706	3198 010 42320	BC857BW
7707	3198 010 42310	BC847BW
7708	3198 010 42310	BC847BW
7709	3198 010 42310	BC847BW
7710	3198 010 42310	BC847BW
7711	3198 010 42310	BC847BW
7712	5322 130 60159	BC846B
7713	4822 130 60373	BC856B
7715	4822 209 30095	LM833D