Pioneer

RENAULT

Service Manual

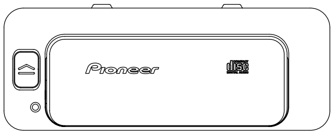

ORDER NO.
CRT2330

MULTI-COMPACT DISC PLAYER

CDX-M2096ZRN

X1HEW

NOTE:

- ● See the separate manual CX-652(CRT1857) for the CD mechanism description.
- ● The CD mechanism assy employed in this model is one of C5 series.
- ● Use the CD magazine specially designed for this product (Renault Part No. : 602531991-A).

VEHICLE	DESTINATION	PRODUCED AFTER	PART No.	ID No.	PIONEER MODEL No.
ESPACE	EUROPE	March 1999	6025 31 3990 A	———	CDX-M2096ZRN/X1HEW

CONTENTS

PIONEER ELECTRONIC CORPORATION 4-1, Meguro 1-Chome, Meguro-ku, Tokyo 153-8654, Japan
PIONEER ELECTRONICS SERVICE INC. P.O.Box 1760, Long Beach, CA 90801-1760 U.S.A.
PIONEER ELECTRONIC [EUROPE] N.V. Haven 1087 Keetberglaan 1, 9120 Melsele, Belgium
PIONEER ELECTRONICS ASIACENTRE PTE.LTD. 253 Alexandra Road, #04-01, Singapore 159936

K-ZZB. FEB. 1999 Printed in Japan

● CD Player Service Precautions

1. For pickup unit(Service)(CXX1235) handling, please refer to"Disassembly" (Page 42).
   During replacement, handling precautions shall be taken to prevent an electrostatic discharge(protection by a short pin).
2. During disassembly, be sure to turn the power off since an internal IC might be destroyed when a connector is plugged or unplugged.
3. Please checking the grating after changing the pickup unit (Page 34).
4. Since these screws protects the mechanism during transport, be sure to affix it when it is transported for repair, etc.

● Transportation of multi-CD Player

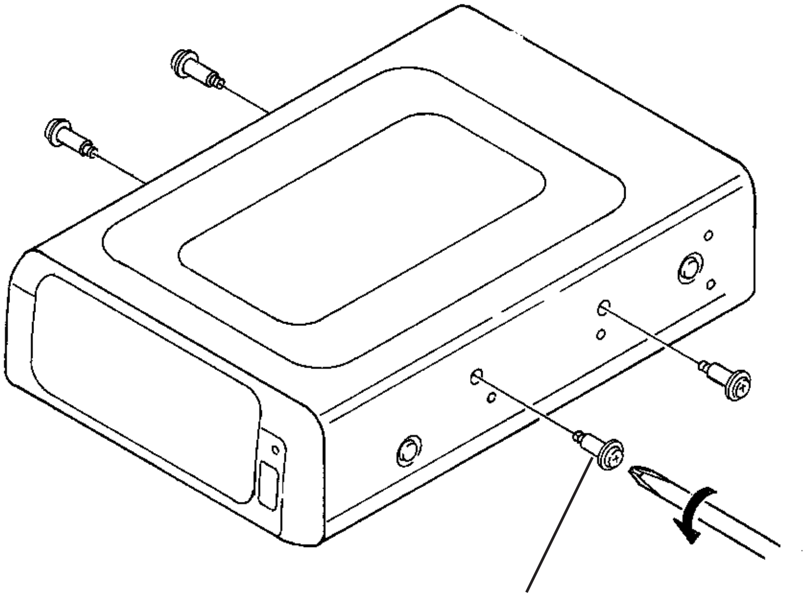

Transport screw
Attach to original position before transporting the set.

A transport screw has been attached to the set in order to protect it during transportation. Be sure to remove the transport screw Before mounting the set.

1. SAFETY INFORMATION

This service manual is intended for qualified service technicians; it is not meant for the casual do-it-yourselfer.
Qualified technicians have the necessary test equipment and tools, and have been trained to properly and safely repair complex products such as those covered by this manual.
Improperly performed repairs can adversely affect the safety and reliability of the product and may void the warranty. If you are not qualified to perform the repair of this product properly and safely; you should not risk trying to do so and refer the repair to a qualified service technician.

1. Safety Precautions for those who Service this Unit.

- **Follow the adjustment steps (see pages 36 through 39)in the service manual when servicing this unit. When checking or adjusting the emitting power of the laser diode exercise caution in order to get safe, reliable results.**

Caution:

1. **During repair or tests, minimum distance of 13cm from the focus lens must be kept.**
2. **During repair or tests, do not view laser beam for 10 seconds or longer.**

2. A "CLASS 1 LASER PRODUCT" label is affixed to the rear of the player.

3. The triangular label is attached to the mechanism unit frame.

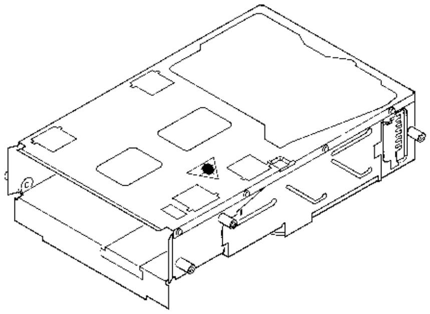

4. Specifications of Laser Diode

Specifications of laser radiation fields to which human access is possible during service.

Wavelength = 785 nanometers

Radiant power = 69.7 microwatts(Through a circular aperture stop having a diameter of 80 millimeters)
0.55 microwatts(Through a circular aperture stop having a diameter of 7 millimeters)

2. EXPLODED VIEWS AND PARTS LIST

2.1 PACKING

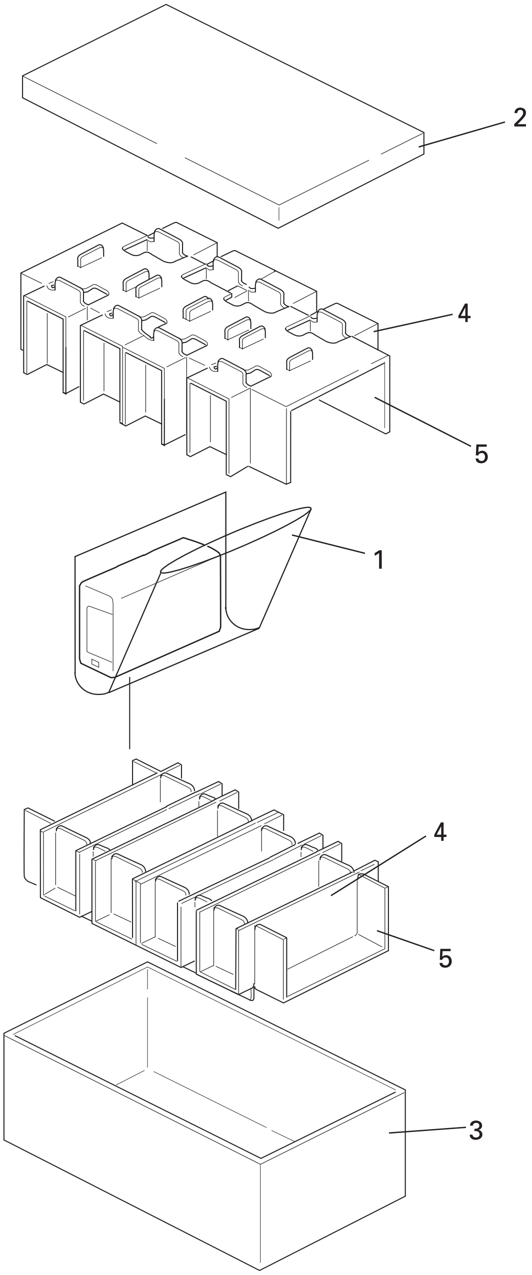

NOTE:

- ● Parts marked by "*" are generally unavailable because they are not in our Master Spare Parts List.
- ● Screws adjacent to ∇ mark on the product are used for disassembly.

● PACKING SECTION PARTS LIST

Mark	No.	Description	Part No.
	1	Polyethylene Bag	CEG1026
	2	Cover	HHW1584
	3	Contain Box	HHL3682
	4	Protector	HHP2132
	5	Protector	HHP2131

2.2 EXTERIOR

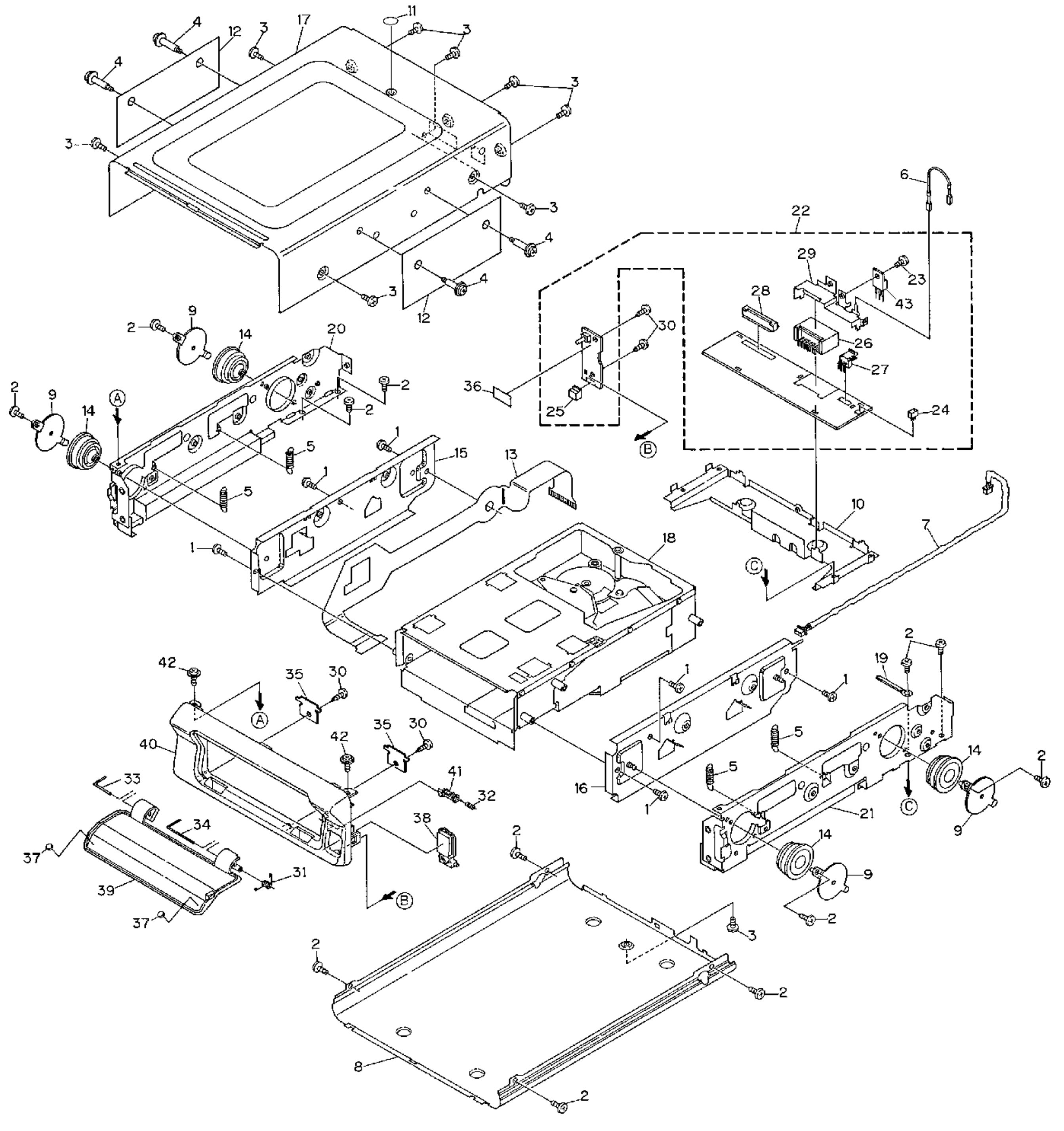
11
4
12
3
17
3
4
3
3
3
3
4
3
4
12
6
22
29
23
43
28
30
26
27
36
25
24
2
9
14
20
2
2
2
9
14
A
5
1
15
13
5
1
10
7
1
18
C
B
42
35
30
A
40
42
35
30
33
41
32
34
38
37
39
31
37
B
2
19
1
1
5
5
16
1
14
2
C
21
9
14
9
2
2
3
2
2
8
2

● EXTERIOR SECTION PARTS LIST

Mark	No.	Description	Part No.
	1	Screw	BMZ26P040FMC
	2	Screw	BMZ30P040FMC
	3	Screw	BMZ30P040FZK
	4	Screw	CBA1353
	5	Spring	CBH2209
	6	Connector	CDE5205
	7	Cord Assy	CDE5367
	8	Lower Case	CNB2349
	9	Holder	CNC7111
	10	Sub Chassis	CNC8091
	11	Seal	CNM6179
	12	Sheet	CNM6180
	13	PCB	CNP4760
	14	Damper	CNV5465
	15	Frame L Assy	CXB1621
	16	Frame R Assy	CXB1622
	17	Upper Case Unit	CXB3040
	18	CD Mechanism Module(C5)	CXK4485
	19	Clamper	HEF-102
	20	Chassis L	HNC7985
	21	Chassis R	HNC7986
	22	Extension Unit	HWX2308
	23	Screw	BMZ26P060FMC
	24	Plug(CN702)	CKS1036
	25	Plug(CN703)	CKS1633
	26	Connector(CN101)	CKS2101
	27	Plug(CN901)	CKS2372
	28	Connector(CN701)	CKS2779
	29	Holder	HNC7984
	30	Screw	BPZ26P080FMC
	31	Spring	CBH1426
	32	Spring	CBH1983
	33	Shaft	CLA1949
	34	Shaft	CLA2038
	35	Spring Holder	CNC3972
	36	Sheet	CNM6020
	37	Cushion	CNM6342
	38	Button	HAC5780
	39	Door	HAT1986
	40	Grille	HNS5107
	41	Lever	HNV5516
	42	Screw	IMS30P040FMC
	43	Transistor(Q903)	2SB1335A

2.3 CD MECHANISM MODULE

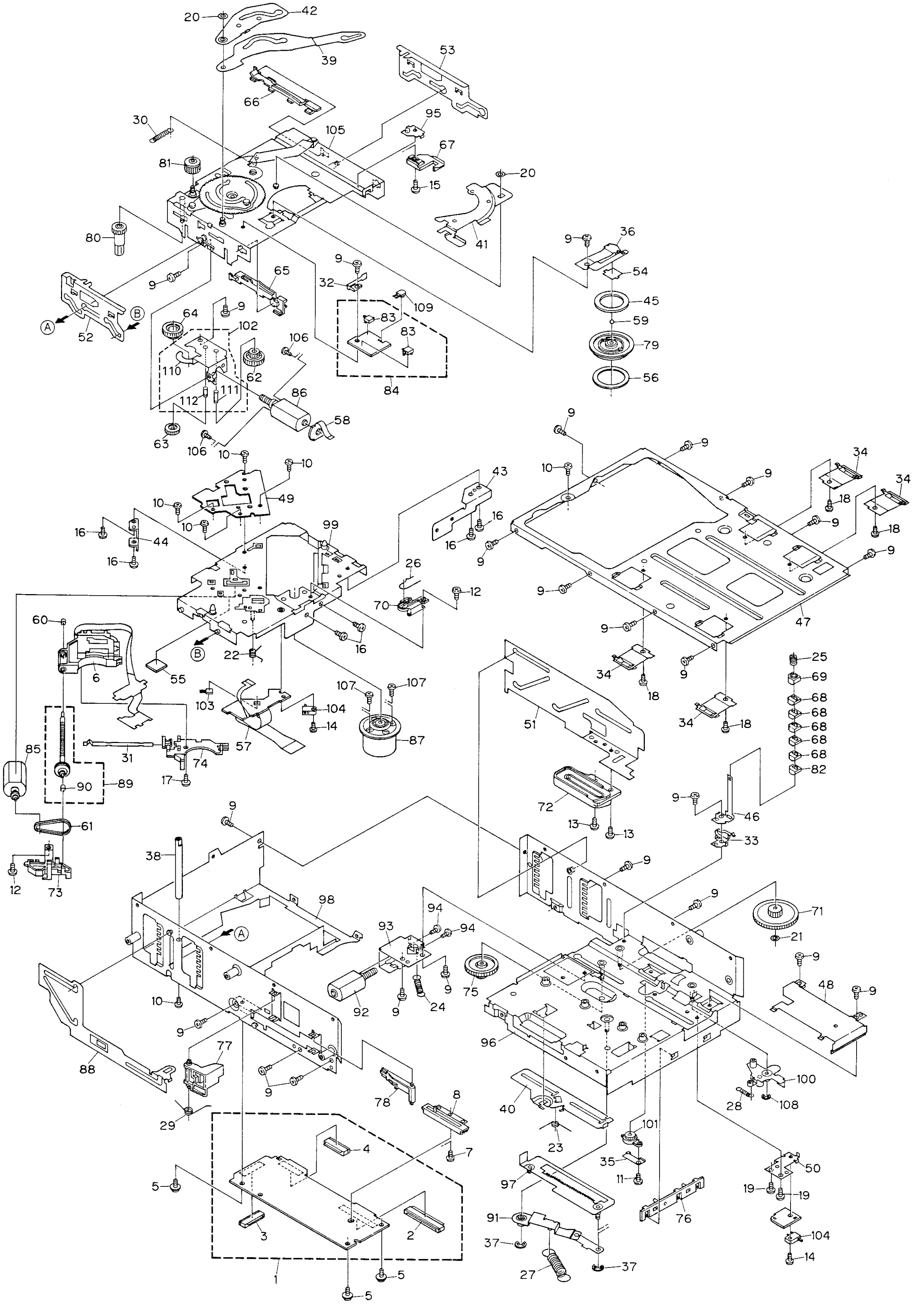

● CD MECHANISM MODULE SECTION PARTS LIST

Mark	No.	Description	Part No.
	1	CD Core Unit	CWX2329
	2	Connector(CN701)	CKS1968
	3	Connector(CN801)	CKS3484
	4	Connector(CN101)	CKS3486
	5	Screw	IMS26P040FMC
	6	Pickup Unit(Service)	CXX1235
	7	Screw	JFZ17P020FNI
	8	Volume(VR801)	CCW1021
	9	Screw(M2x2.5)	CBA1037
	10	Screw(M2x2.5)	CBA1041
	11	Screw(M2x2.5)	CBA1077
	12	Screw(M2x2.5)	CBA1085
	13	Screw	CBA1114
	14	Screw	CBA1166
	15	Screw(M2x2)	CBA1176
	16	Screw	CBA1250
	17	Screw(M2x2)	CBA1362
	18	Screw	CBA1387
	19	Screw	CBA1419
	20	Washer	CBF1002
	21	Washer	CBF1038
	22	Spring	CBH1822
	23	Spring	CBH1827
	24	Spring	CBH1830
	25	Spring	CBH1930
	26	Spring	CBH1948
	27	Spring	CBH1972
	28	Spring	CBH1974
	29	Spring	CBH2024
	30	Spring	CBH2091
	31	Spring	CBL1241
	32	Spring	CBL1242
	33	Spring	CBL1295
	34	Spring	CBL1314
	35	Spring	CBL1362
	36	Spring	CBL1388
	37	Washer	YE20FUC
	38	Shaft	CLA3087
	39	Arm	CNC6181
	40	Lever	CNC6194
	41	Lever	CNC6534
	42	Arm	CNC6799
*	43	Holder	CNC6819
*	44	Holder	CNC6827
	45	Plate	CNC6847
	46	Holder	CNC7065
	47	Frame	CNC7070
	48	Cover	CNC7074
	49	Plate	CNC7076
*	50	Bracket	CNC7115
	51	Lever	CNC7715
	52	Lever	CNC7975
	53	Lever	CNC8097
	54	Spacer	CNM4879
*	55	Sheet	CNM5020
	56	Sheet	CNM5118
	57	PCB	CNP4205
	58	PCB	CNP4382
	59	Ball	CNR1189
	60	Bearing	CNR1423
	61	Belt	CNT1053
	62	Gear	CNV5764
	63	Gear	CNV4404
	64	Gear	CNV4406
	65	Rail(White)	CNV4419
	66	Rail(Black)	CNV4420
	67	Lever	CNV4422
	68	Guide	CNV4597
	69	Guide	CNV4722
	70	Holder	CNV4761
	71	Gear	CNV4827
	72	Rack	CNV4828
	73	Cover	CNV4924
	74	Holder	CNV4950
	75	Gear	CNV4954
	76	Guide	CNV4982
	77	Arm	CNV5072
	78	Arm	CNV5073
	79	Clamper	CNV5226
	80	Gear	CNV5305
	81	Gear	CNV5879
	82	Guide	CNV5517
	83	Switch(S851,852)	CSN1033
	84	PCB Unit	CWX2032
	85	Motor Unit(M854)(CARRIAGE)	CXB1394
	86	Motor Unit(M853)(TRAY)	CXB1142
	87	Motor Unit(M851)(SPINDLE)	CXB1395
	88	Lever Unit	CXB1256
	89	Screw Unit	CXB1270
	90	Bearing	CNR1423

Mark	No.	Description	Part No.
	91	Arm Unit	CXB1476
	92	Motor Unit(M852)(ELV)	CXB1847
	93	Bracket	CNC8396
	94	Screw	JFZ20P025FNI
	95	Plate Unit	CXB2262
	96	Magazine Holder Unit	CXB2287
	97	Lever Unit	CXB2289
	98	Frame Unit	CXB4200
	99	Chassis Unit	CXB2692
	100	Arm Unit	CXB2815
	101	Damper Unit	CXB2816
	102	Bracket Unit	CXB4008
	103	Photo Transistor(Q851)	PT4800
	104	Switch(S853,S855)	CSN1012
	105	Chassis Unit	CXB3313
	106	Screw	JFZ20P025FNI
	107	Screw	JGZ17P022FZK
	108	Washer	YE15FUC
	109	LED(D851)	CN504-2
*	110	Bracket	CNC8360
	111	Shaft	CLP1151
	112	Shaft	CLP1152

Note: As for brown and orange lead wires, be sure to use the cord kit (CDK1033).
(Shorter or longer wires may lead to malfunctions.)

● CD MECHANISM MODULE GREASE APPLICATION LOCATION

In the exploded view, Ⓟ and Ⓔ indicate the kinds of grease used in the CD mechanism:

NOTE:

Ⓟ: PG-641 (yellow grease made by Dow Corning)

Ⓔ: E paste (yellowish White paste made by Dow Corning)

* The E paste has higher viscosity than the PG-641 does. Be careful not to apply to your clothes when handling it.

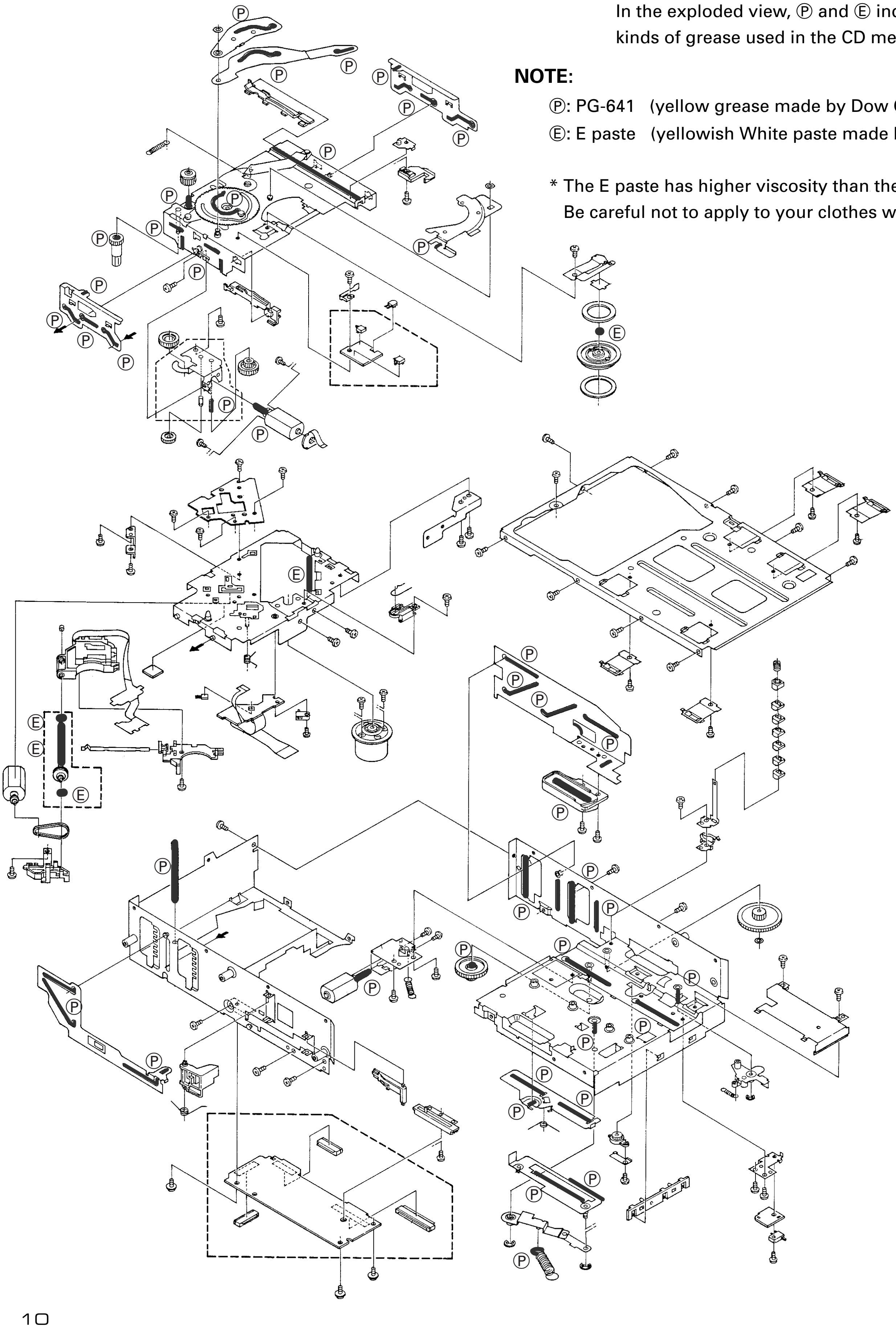

3. BLOCK DIAGRAM AND SCHEMATIC DIAGRAM

3.1 BLOCK DIAGRAM

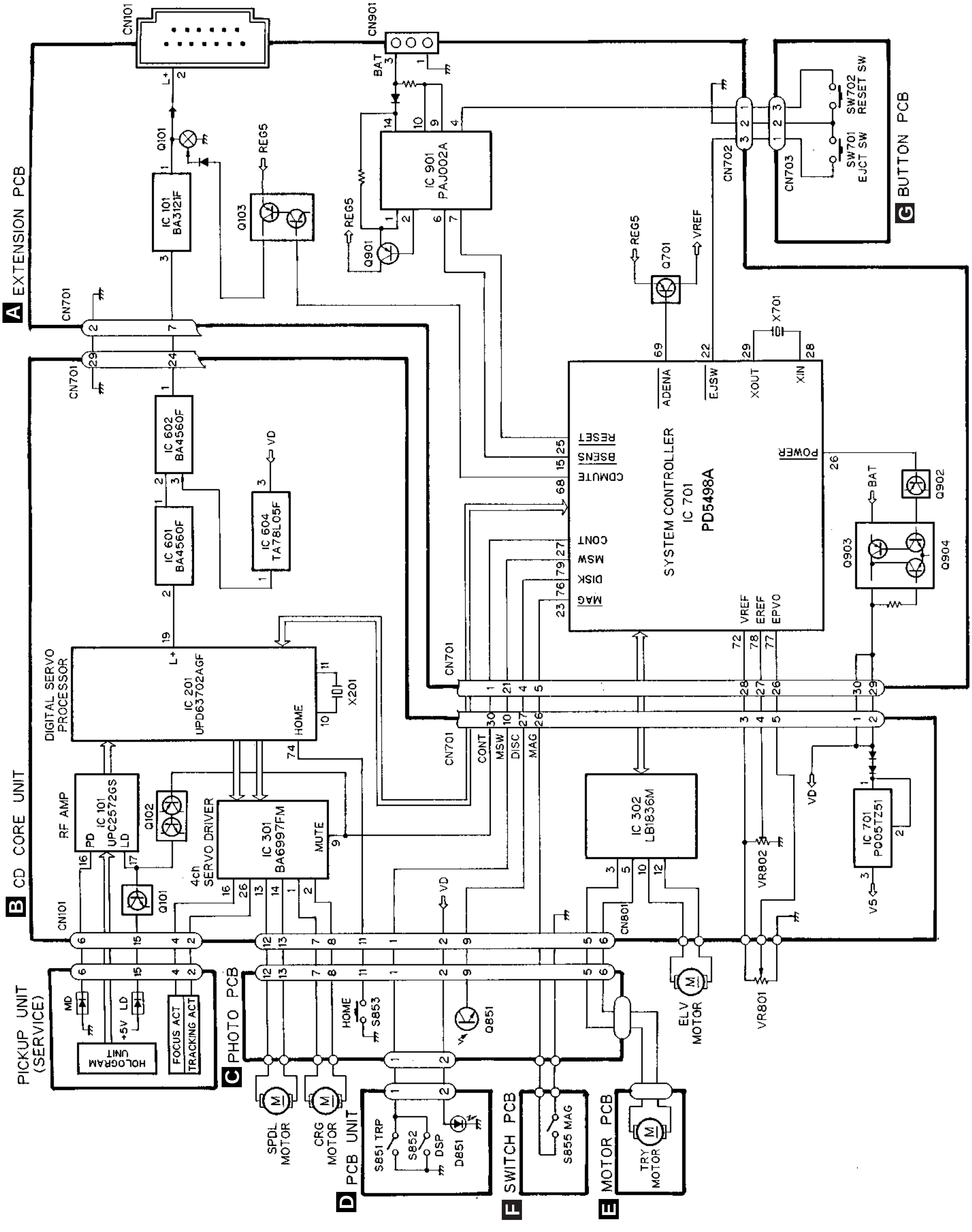

3.2 EXTENSION UNIT

Note: When ordering service parts, be sure to refer to “EXPLODED VIEWS AND PARTS LIST” or “ELECTRICAL PARTS LIST”.

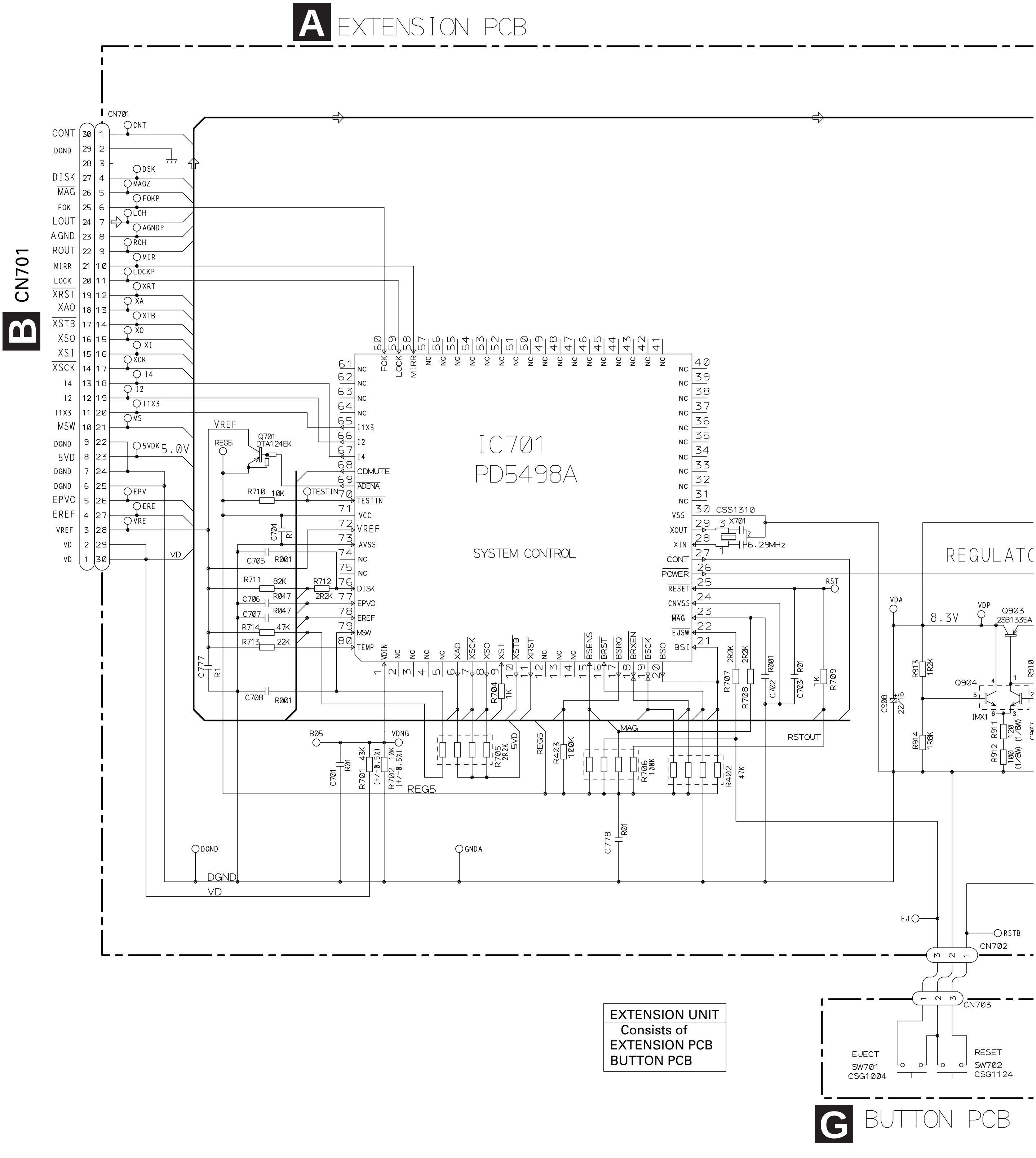

EXTENSION UNIT
Consists of
EXTENSION PCB
BUTTON PCB

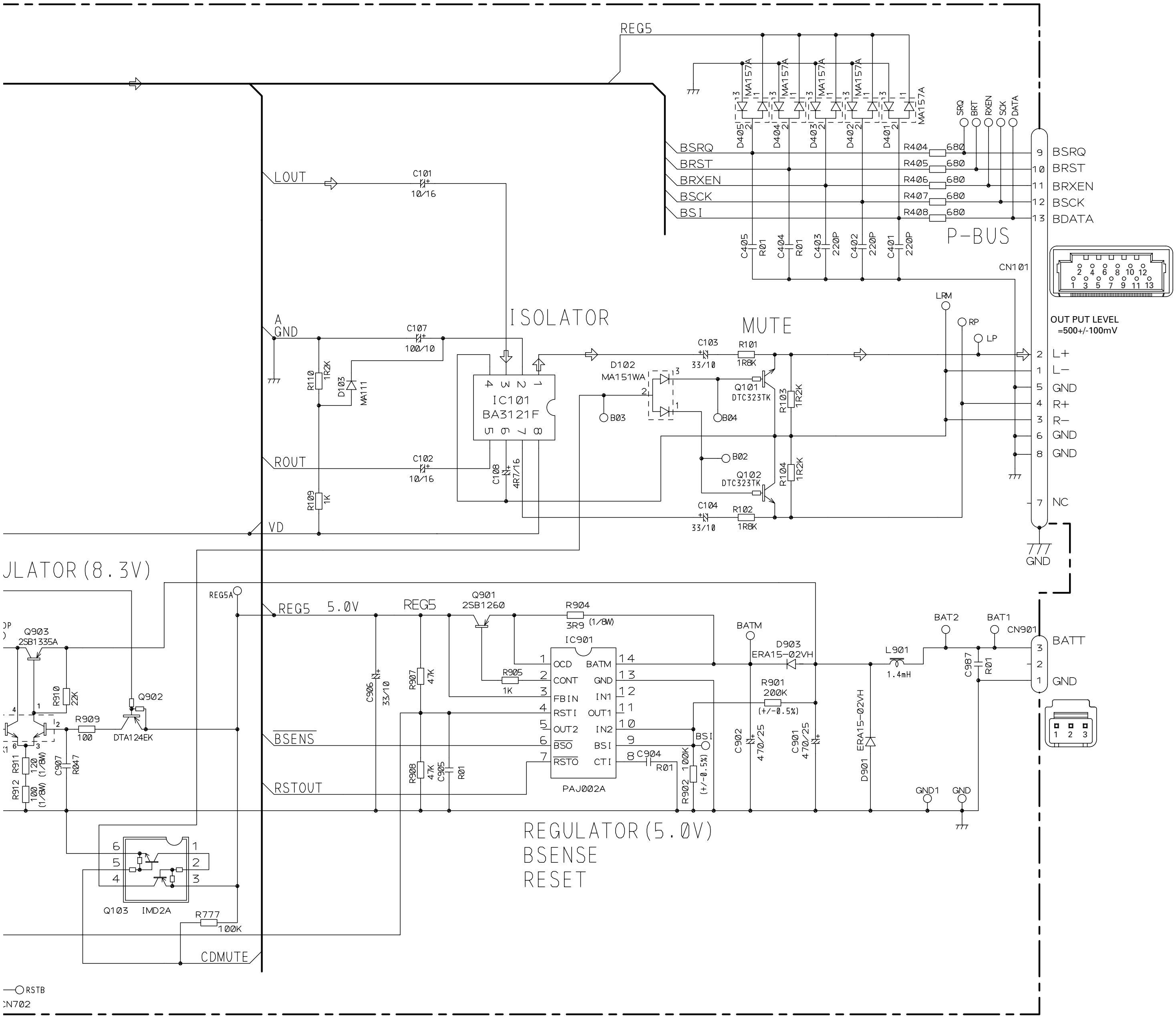

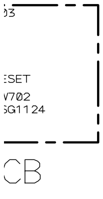

NOTE:

─▭─ Symbol indicates a resistor.
No differentiation is made between chip resistors and discrete resistors.

─||─ Symbol indicates a capacitor.
No differentiation is made between chip capacitors and discrete capacitors.

Decimal points for resistor and capacitor fixed values are expressed as:
2.2→2R2
0.022→R022

3.3 CD MECHANISM MODULE(GUIDE PAGE)

B-a

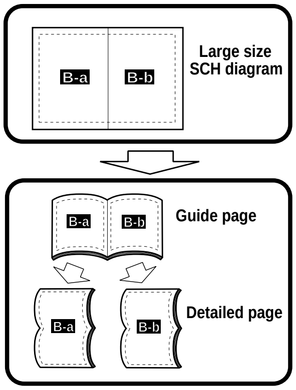

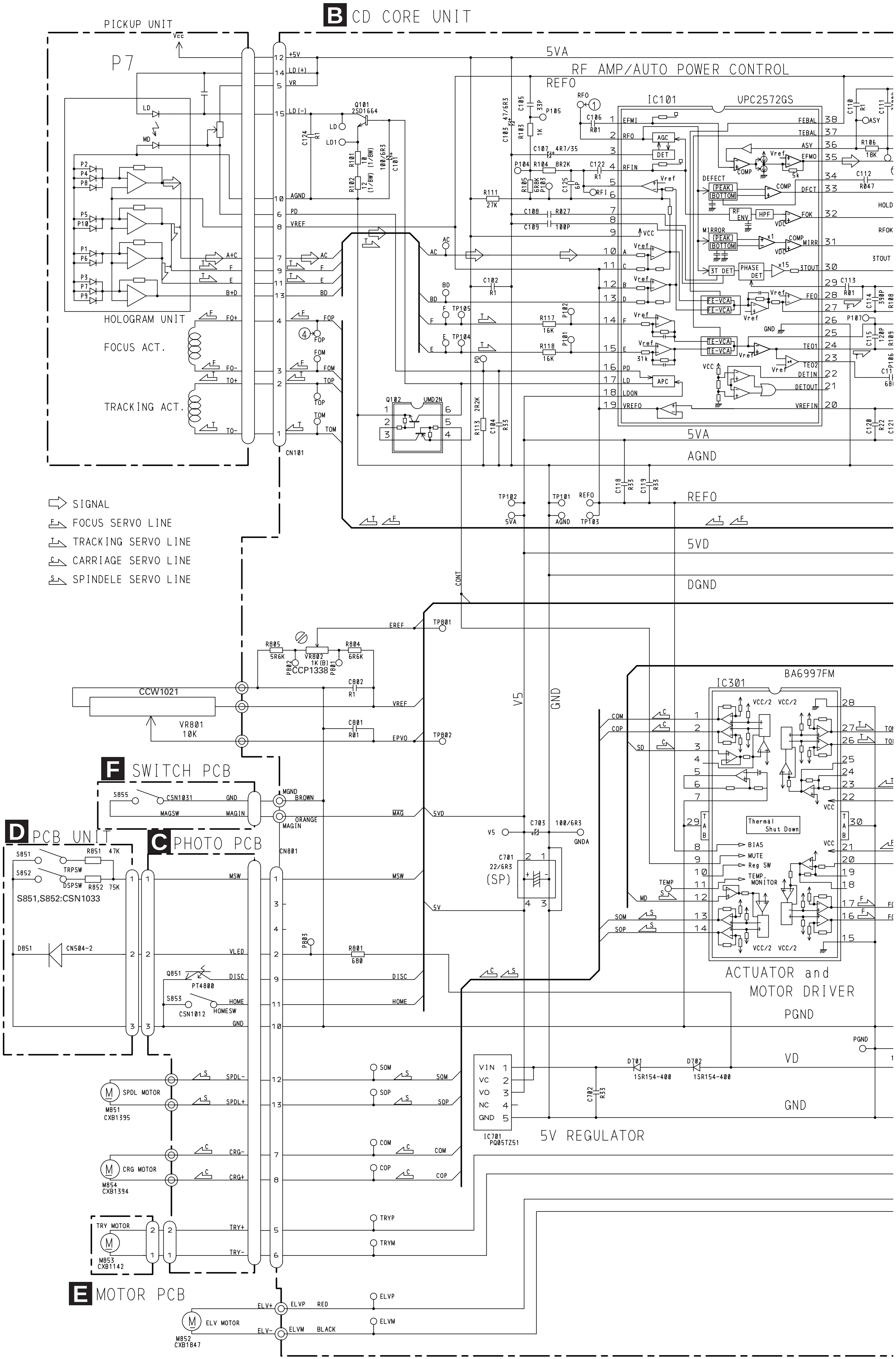

B-b

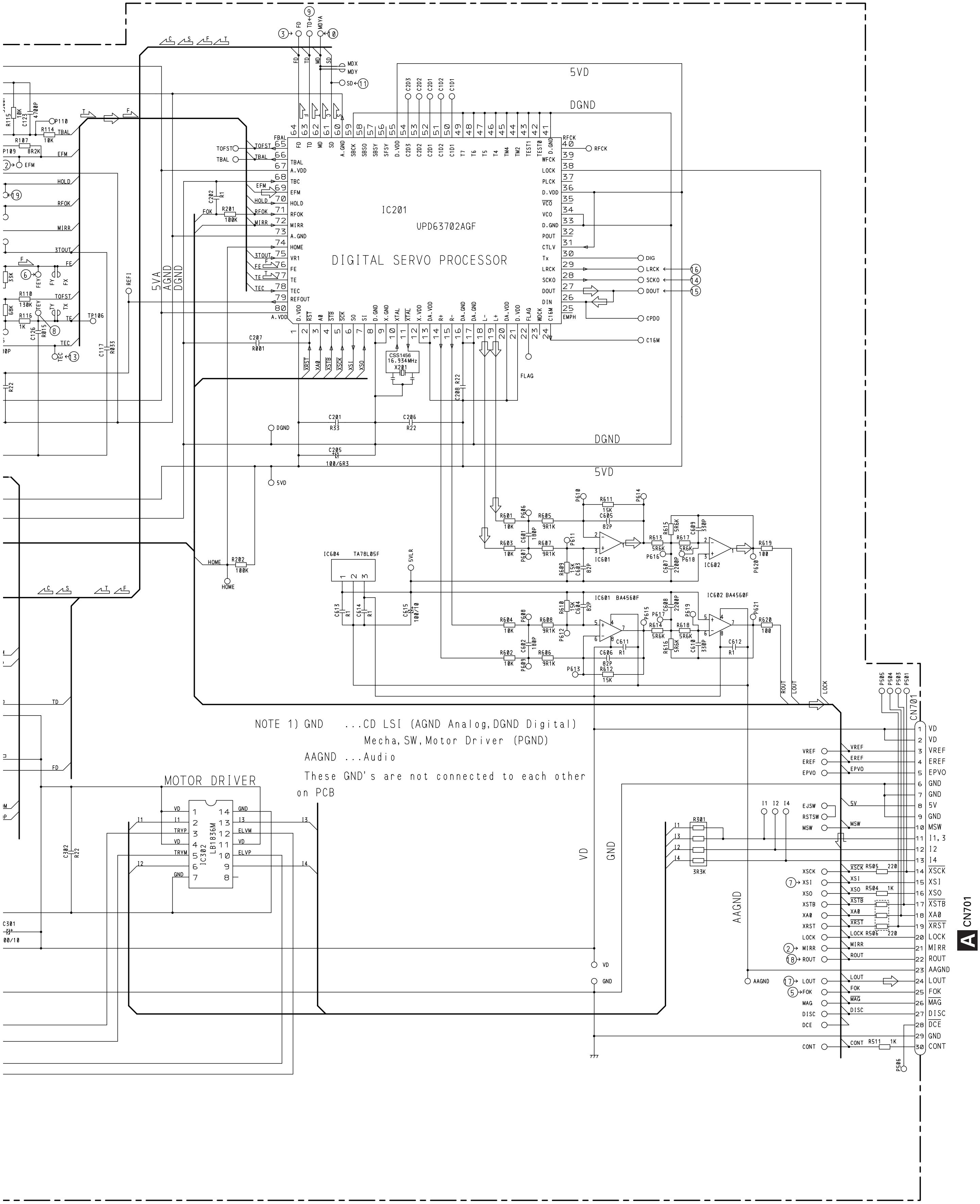

NOTE 1) GND ...CD LSI (AGND Analog,DGND Digital)
Mecha,SW,Motor Driver (PGND)
AAGND ...Audio
These GND's are not connected to each other on PCB

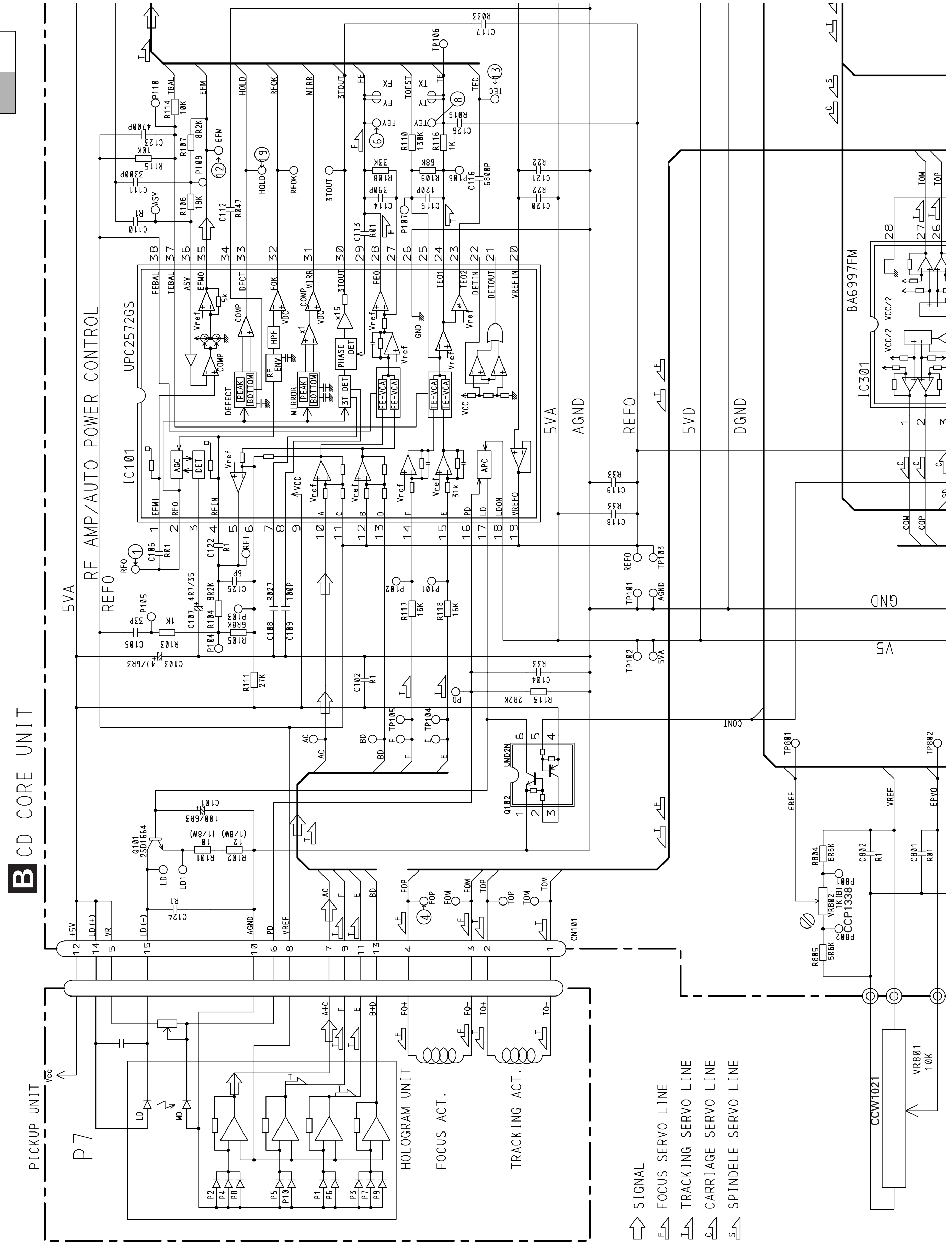
B CD CORE UNIT
RF AMP/AUTO POWER CONTROL
IC101
UPC2572GS
BA6997FM
IC301
PICKUP UNIT
P7
HOLOGRAM UNIT
FOCUS ACT.
TRACKING ACT.
CN101
Q101 2SD1664
Q102 UMD2N
VR801 10K
CCW1021
VR802 1K (B) CCP1338
5VA
AGND
REFO
5VD
DGND
GND
V5
CONT
SIGNAL
FOCUS SERVO LINE
TRACKING SERVO LINE
CARRIAGE SERVO LINE
SPINDELE SERVO LINE

B-a B-b

A
B
C
D

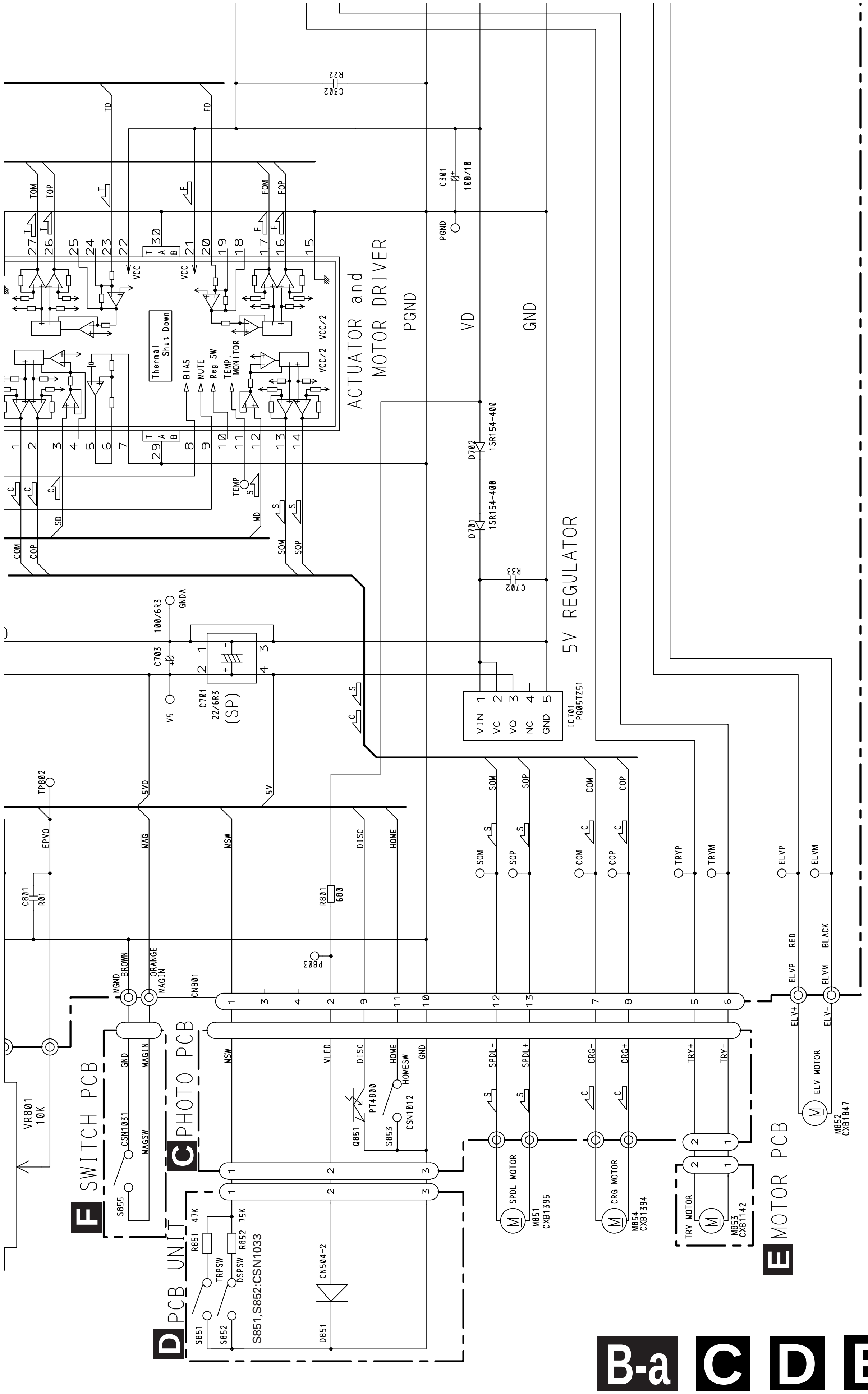

B-a C D E F

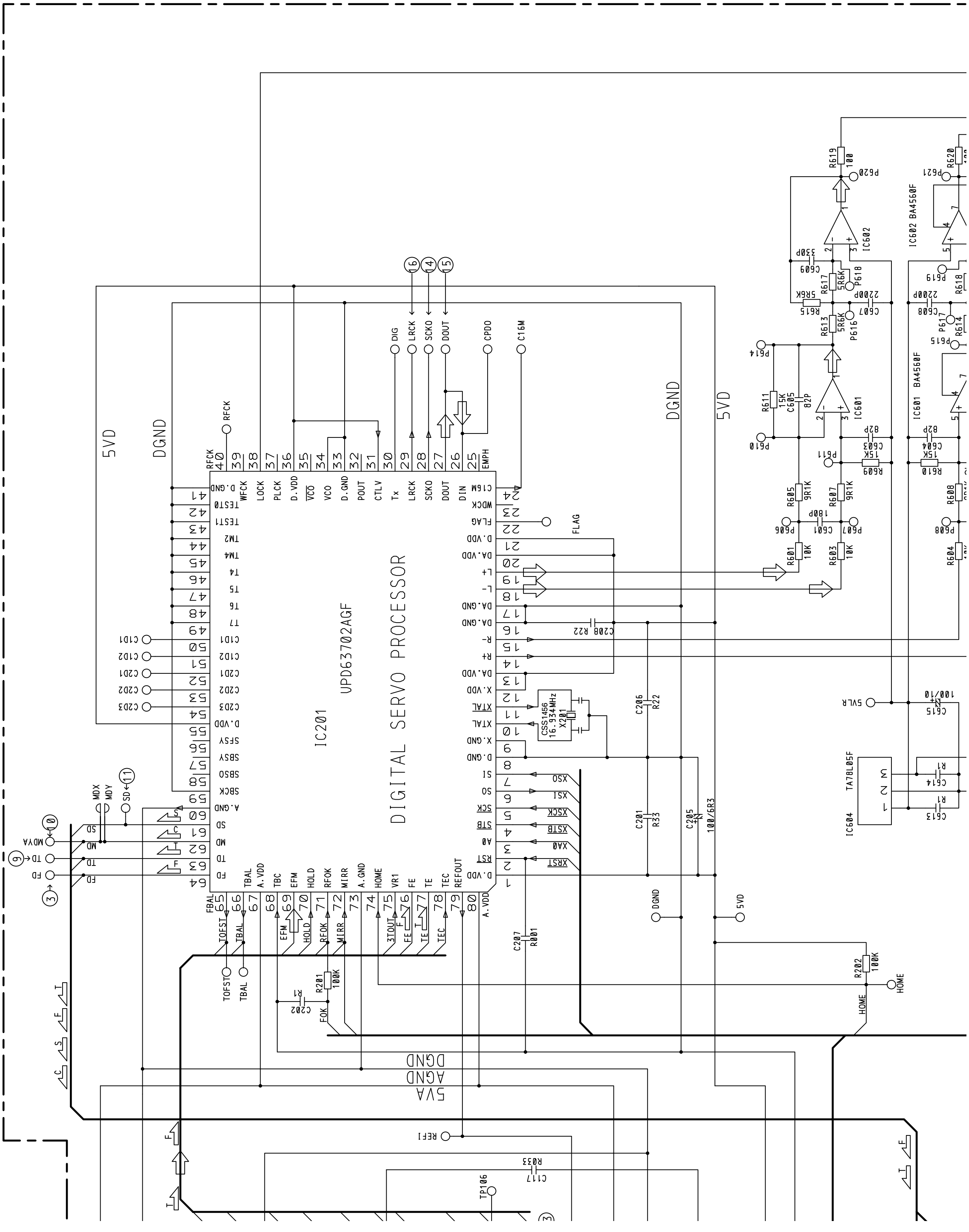
B
C
D
IC201
UPD63702AGF
DIGITAL SERVO PROCESSOR
5VD
DGND
RFCK
DIG
LRCK
SCKO
DOUT
CPDO
C16M
FLAG
16
14
15
RFCK WFCK LOCK PLCK D.VDD VCO VCO D.GND POUT CTLV Tx LRCK SCKO DOUT DIN EMPH
C16M WDCK FLAG D.VDD DA.VDD L+ L- DA.GND DA.GND R- R+ DA.VDD X.VDD XTAL XTAL X.GND D.GND SI SO SCK STB A0 RST D.VDD
D.GND TEST0 TEST1 TM2 TM4 T4 T5 T6 T7 C1D1 C1D2 C2D1 C2D2 C2D3 D.VDD SFSY SBSY SBSO SBCK A.GND SD MD TD FD
FBAL TBAL A.VDD TBC EFM HOLD RFOK MIRR A.GND HOME VR1 FE TE TEC REFOUT A.VDD
C1D1
C1D2
C2D1
C2D2
C2D3
MDX
MDY
SD
11
10
MDVA
9
TD
FD
3
S
C
F
CSS1456
16.934MHz
X201
C208 R22
C206 R22
C201 R33
C205 100/6R3
XSO
XSI
XSCK
XSTB
XA0
XRST
DGND
5VD
TOFST
TBAL
EFM
HOLD
RFOK
MIRR
3TOUT
FE
TE
TEC
C207 R001
R201 100K
C202 R1
FOK
R202 100K
HOME
DGND
AGND
5VA
REFI
R033
C117
TP106
I
F
E
R619 100
P620
P621
R620
IC602
IC602 BA4560F
330P
C609
R617 5R6K
P618
R615 5R6K
2200P
C607
C608
P619
R618
R613 5R6K
P616
P617
R614
P615
P614
R611 15K
C605 82P
IC601
IC601 BA4560F
P610
82P
C603
P611
15K
R609
C604
R610
R605 9R1K
R607 9R1K
R608
180P
C601
P606
P607
P608
R601 10K
R603 10K
R604
5VLR
100/10
C615
TA78L05F
IC604
R1
C614
C613
DGND
5VD

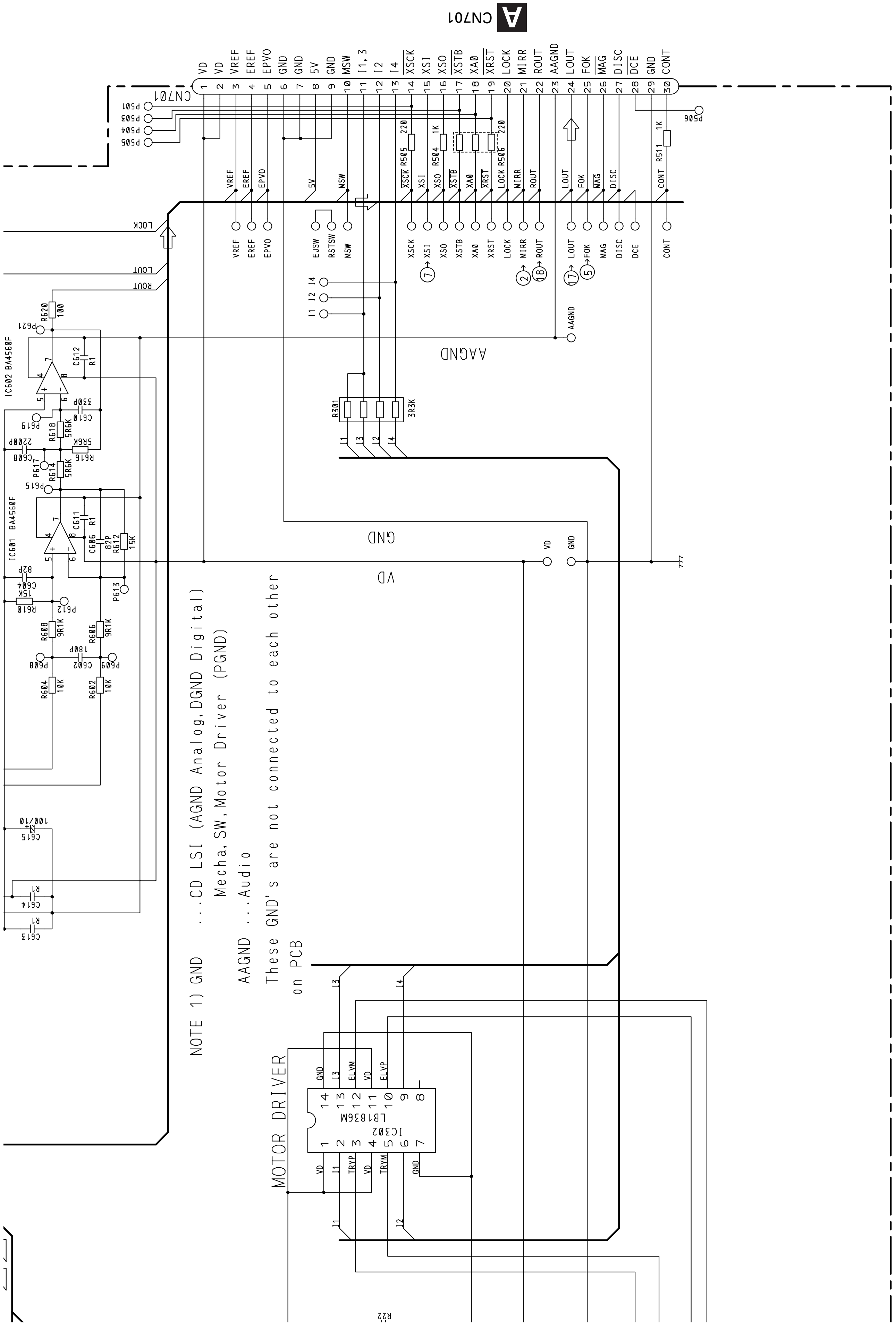

NOTE 1) GND ...CD LSI (AGND Analog, DGND Digital)
Mecha, SW, Motor Driver (PGND)
AAGND ...Audio
These GND's are not connected to each other on PCB

Note:1. The encircled numbers denote measuring pointes in the circuit diagram.
2. Reference voltage
REFO:2.5V

● Waveforms

① RFO 0.5V/div. 0.5μs/div.
Normal mode: play

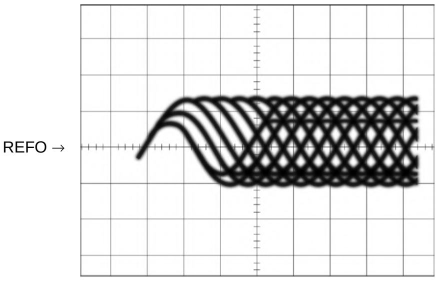

① CH1: RFO 1V/div. 0.5ms/div.
② CH2: MIRR 5V/div.
Test mode: Tracking open

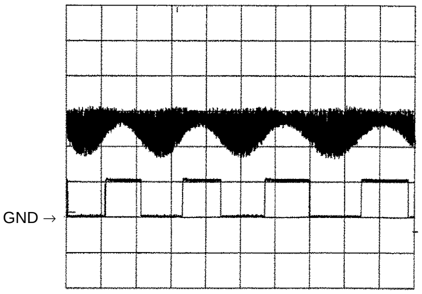

① CH1: RFO 1V/div. 0.5ms/div
② CH2: MIRR 5V/div.
Normal mode: The defect part passes 800μm

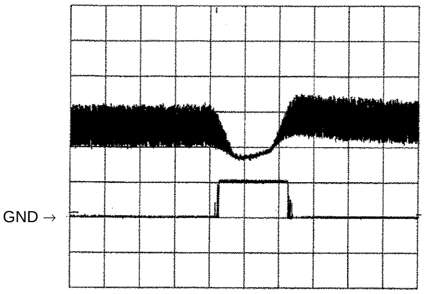

③ CH1: FD 0.5V/div. 0.2s/div.
④ CH2: FOP 2V/div.
Test mode: No disc, Focus close

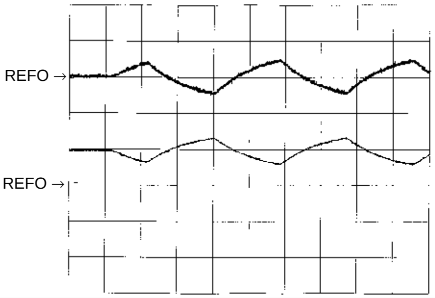

③ CH1: FD 0.5V/div. 0.2s/div.
⑤ CH2: FOK 2V/div.
Normal mode: Focus close

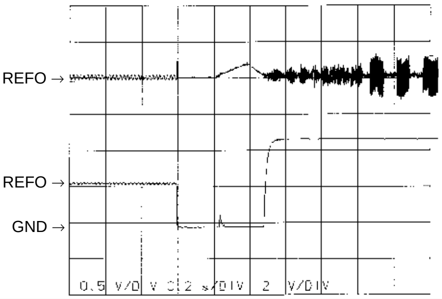

⑥ CH1: FEY 0.5V/div. 1ms/div.
⑦ CH2: XSI 2V/div.
Normal mode: Focus close

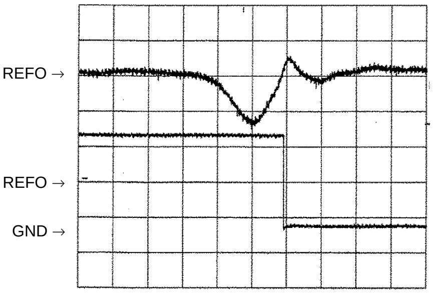

⑧ CH1: TEY 0.5V/div. 0.5ms/div.
⑨ CH2: TD 0.5V/div.
Test mode: 32 tracks jump (FWD)

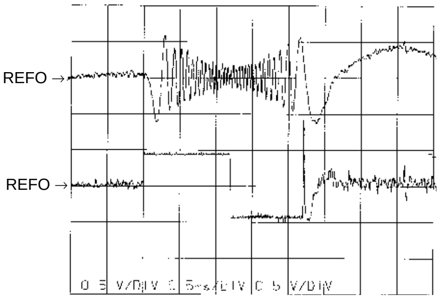

⑧ CH1: TEY 0.5V/div. 0.5ms/div.
⑨ CH2: TD 0.5V/div.
Test mode: Single jump (FWD)

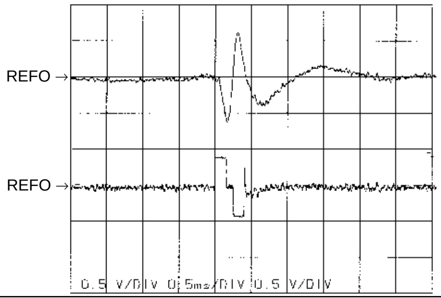

⑧ CH1: TEY 0.5V/div. 5ms/div.
⑨ CH2: TD 0.5V/div.
Test mode: 100 tracks jump (FWD)

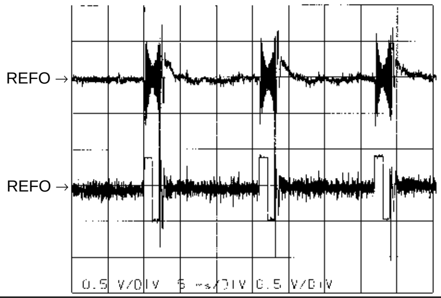

⑥ CH1: FEY 0.1V/div. 20ms/div.
③ CH2: FD 0.2V/div.
Normal mode: Play

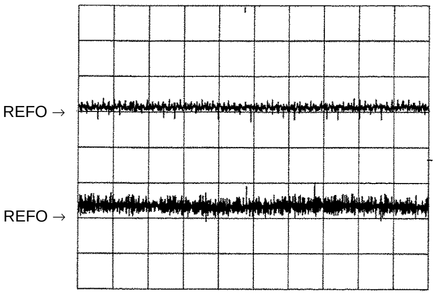

③ CH1: FD 0.5V/div. 0.5s/div.
⑩ CH2: MDYA 1V/div.
Normal mode: Focus close (12cm)

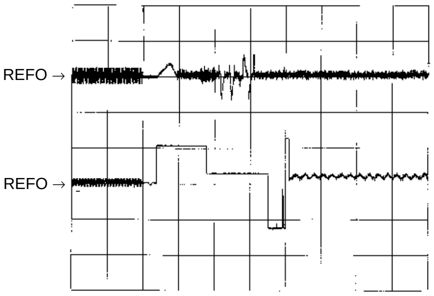

③ CH1: FD 0.5V/div. 0.5s/div.
⑩ CH2: MDYA 1V/div.
Normal mode: Focus close (8cm)

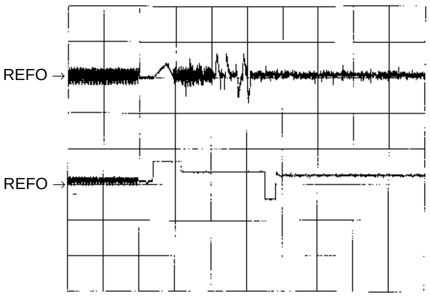

⑧ CH1: TEY 0.2V/div.
⑨ CH2: TD 0.2V/div.
20ms/div.
Normal mode: play

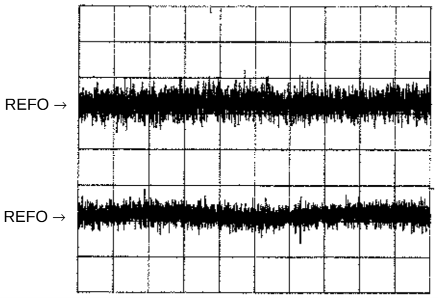

⑧ CH1: TEY 0.5V/div.
⑪ CH2: SD 0.5V/div.
5ms/div.
Normal mode: Track search

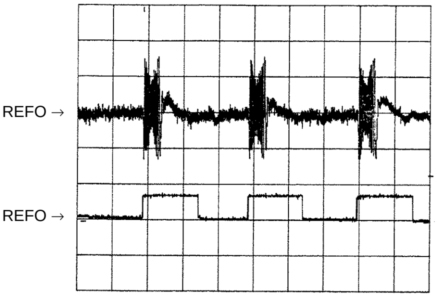

⑩ MDYA 0.5V/div. 0.1s/div.

Normal mode: Play (12cm)

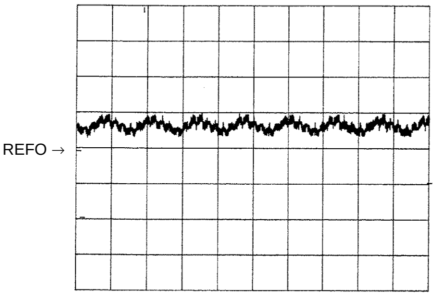

⑩ MDYA 0.5V/div. 10ms/div.

Long Search (12cm)

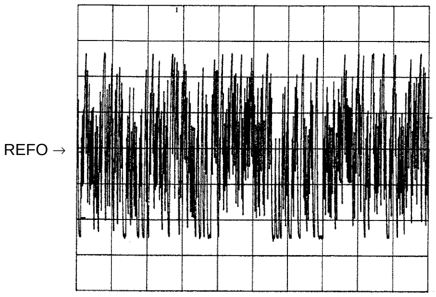

⑫ EFM 1V/div. 5µs/div.

Play

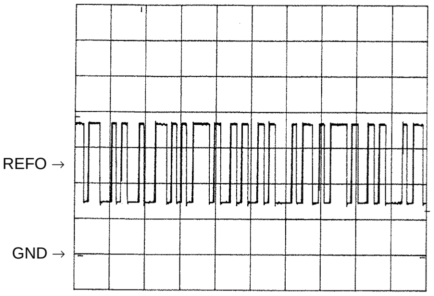

⑧ CH1: TEY 1V/div.
⑬ CH2: TEC 1V/div.
2ms/div.
Test mode: Focus close
Tracking open

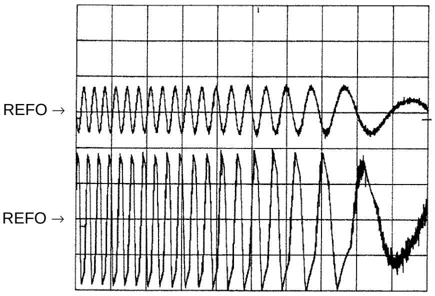

⑧ CH1: TEY 0.5V/div.
⑥ CH2: FEY 0.5V/div.
0.2s/div.
Normal mode: AGC after focus close

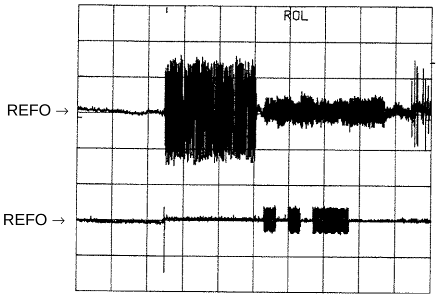

⑭ SCKO 2V/div. 1µs/div.

Play

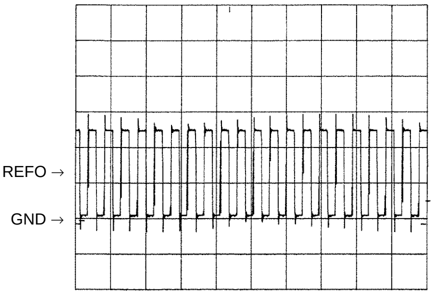

⑮ Dout 2V/div. 10µs/div.

Play

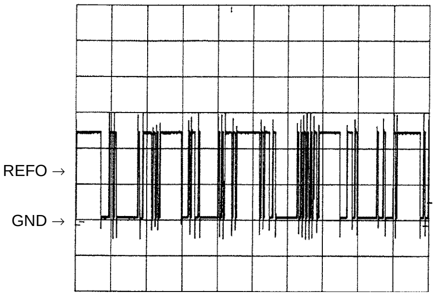

⑯ LRCK 2V/div. 20µs/div.

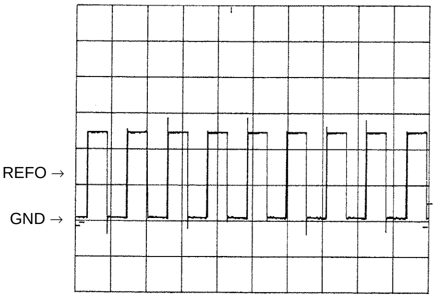

⑱ CH1: R OUT 1V/div.
⑰ CH2: L OUT 1V/div.
0.2ms/div.
Normal mode: Play (1kHz 0dB)

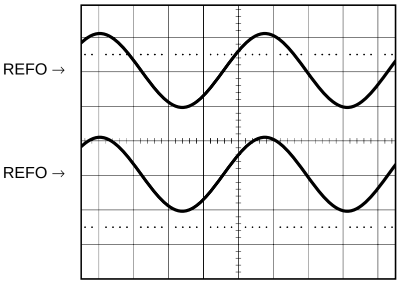

⑥ CH1: FEY 0.2V/div.
③ CH2: FD 0.5V/div.
1ms/div.
Normal mode: During AGC

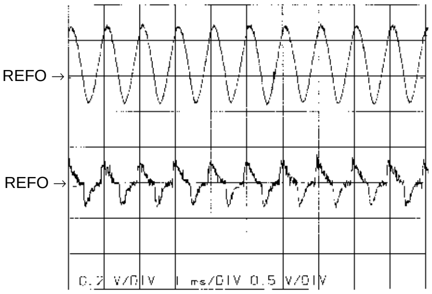

⑧ CH1: TEY 0.2V/div. 1ms/div. ⑨ CH2: TD 0.5V/div. Normal mode: During AGC 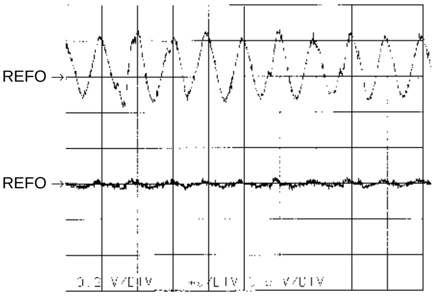 	① CH1: RFO 1V/div. 0.5ms/div. ⑲ CH2: HOLD 5V/div. Normal mode: The defect part passes 800µm 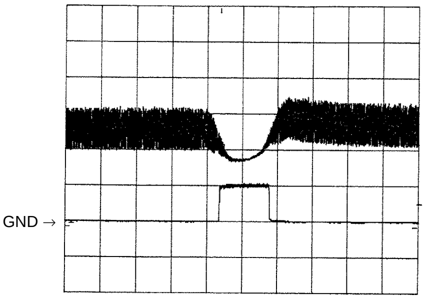 	③ CH1: FD 1V/div. 0.5ms/div. ⑲ CH2: HOLD 5V/div. Normal mode: The defect part passes 800µm 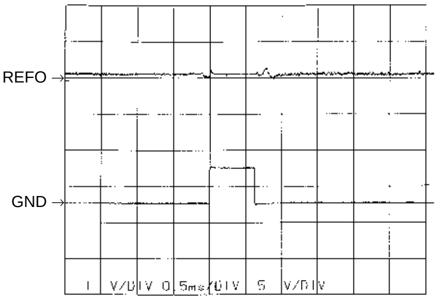

4. PCB CONNECTION DIAGRAM

4.1 EXTENSION PCB

NOTE FOR PCB DIAGRAMS

1. The parts mounted on this PCB include all necessary parts for several destination.
   For further information for respective destinations, be sure to check with the schematic diagram.
2. Viewpoint of PCB diagrams

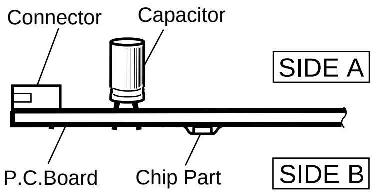

A EXTENSION PCB

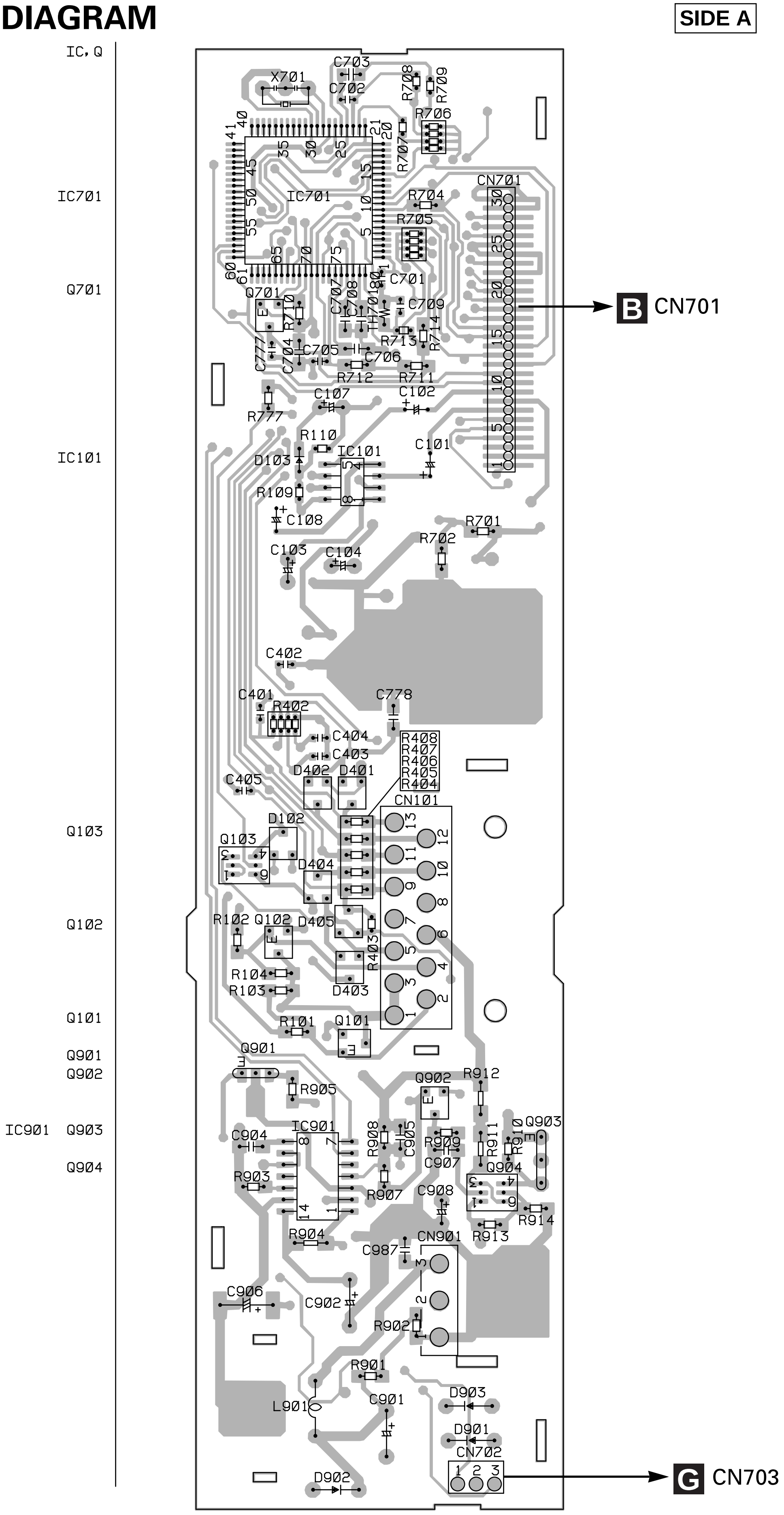

A EXTENSION PCB

SIDE B

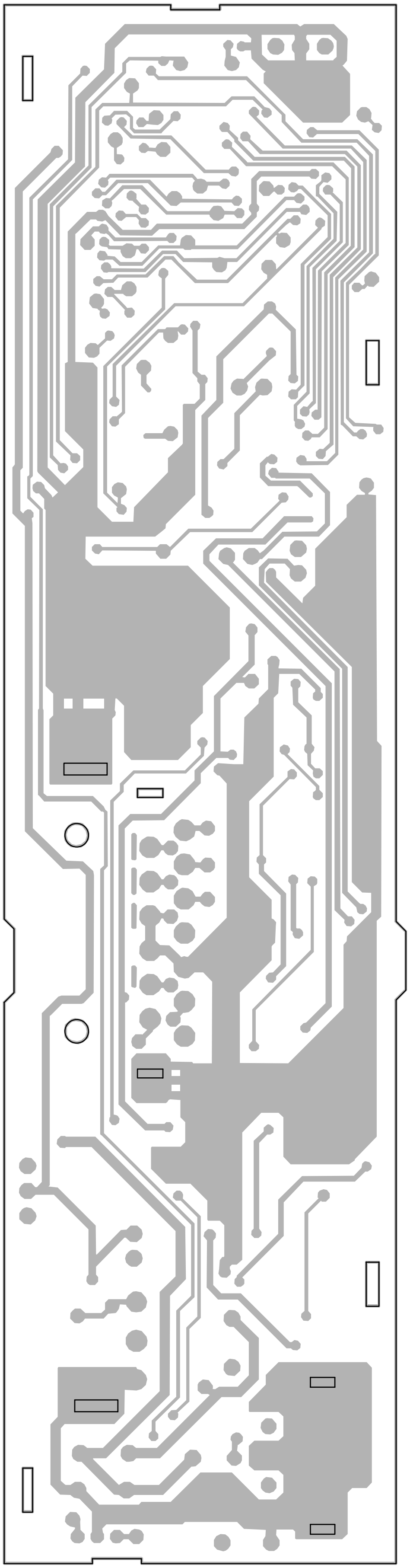

4.2 CD CORE UNIT

SIDE A

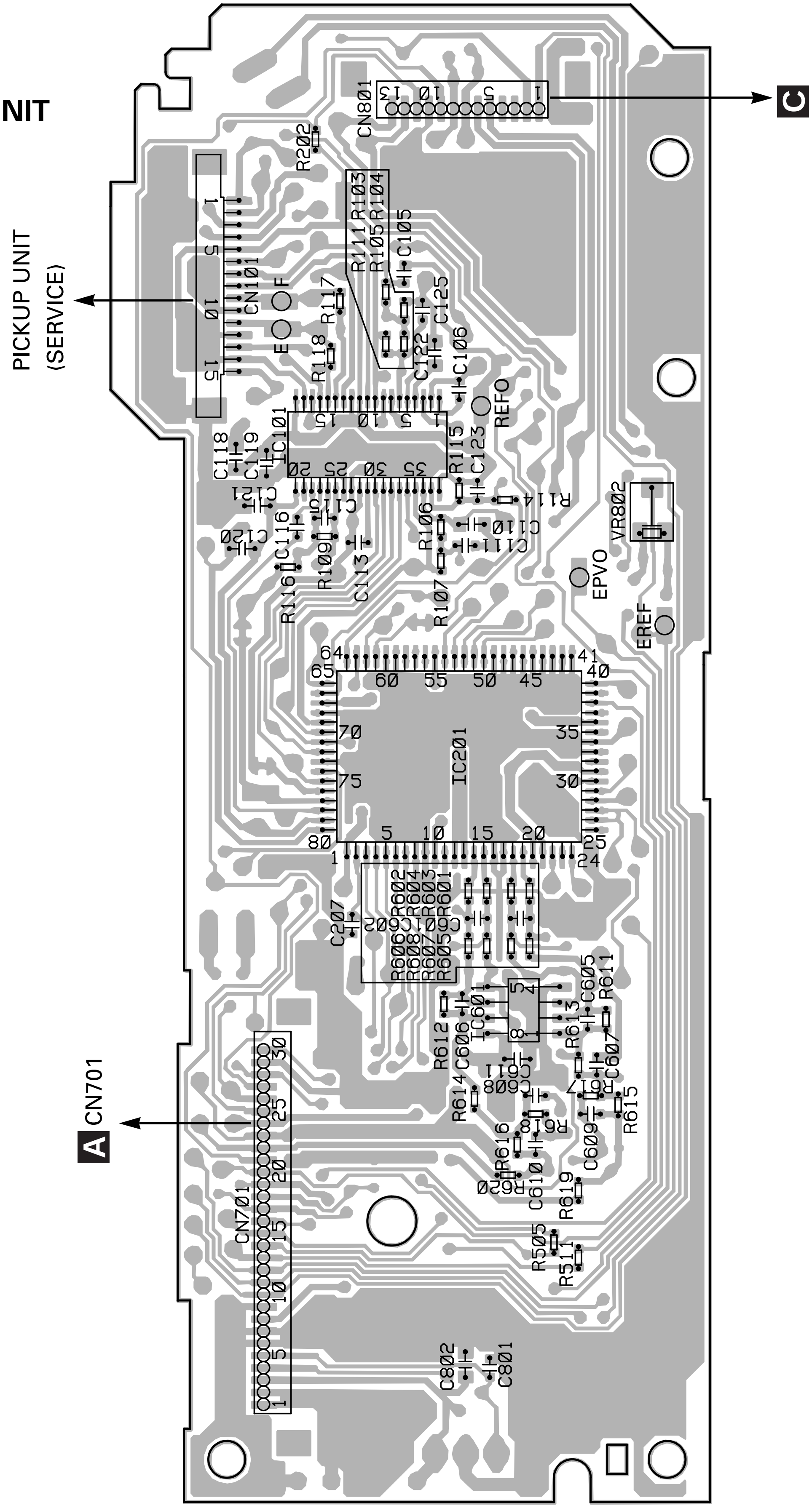

B CD CORE UNIT

ADJ		VR802
IC, Q	IC101	IC201 IC601

B

SIDE B

A

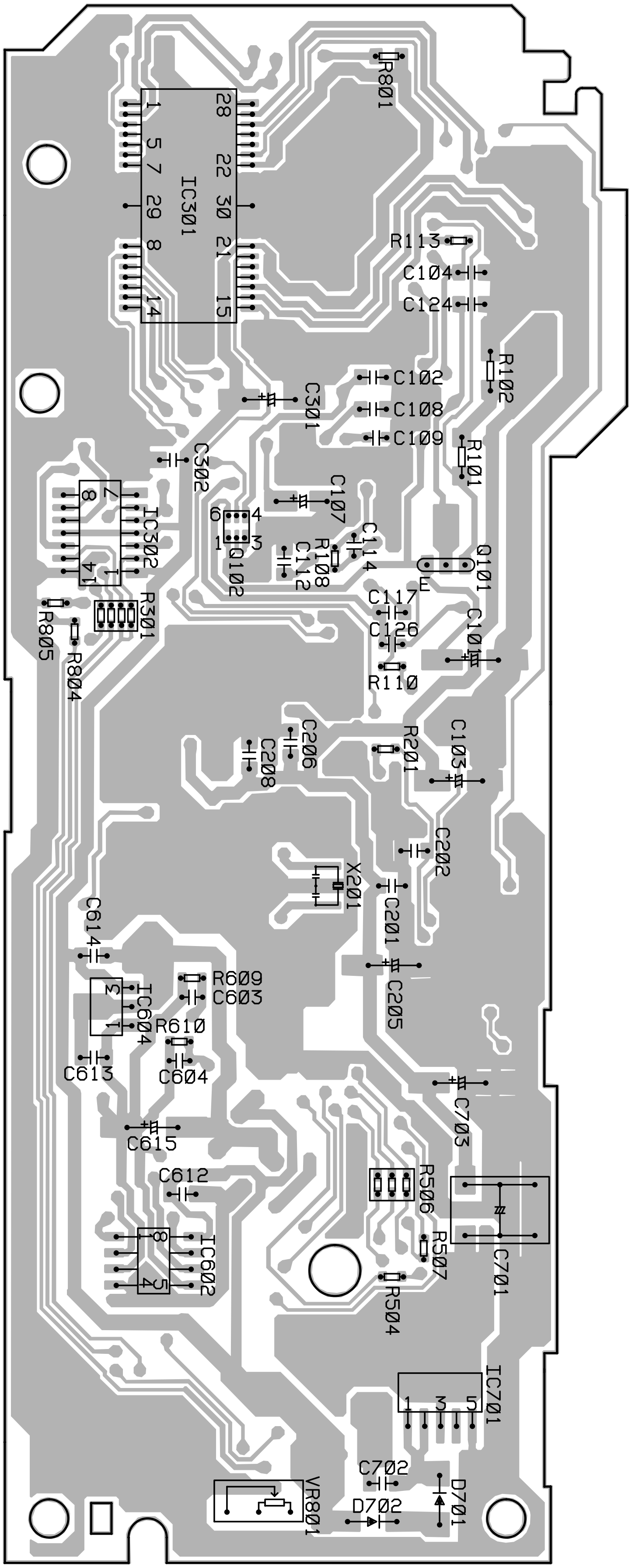

ADJ	IC,Q
VR801	Q102 IC301 IC602 IC302 IC604
	Q101 IC701

B

C

D

B CD CORE UNIT

4.3 PHOTO PCB

C PHOTO PCB

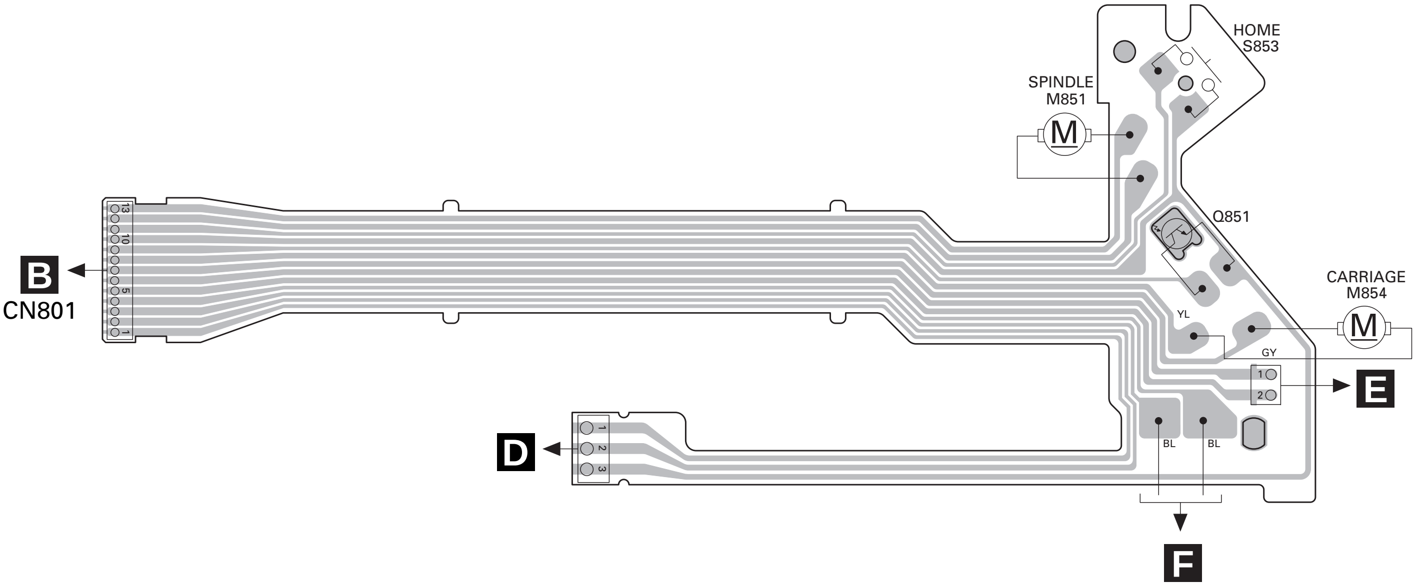

4.4 PCB UNIT

D PCB UNIT

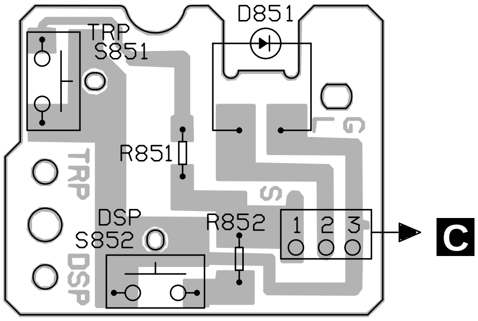

4.5 MOTOR PCB

E MOTOR PCB

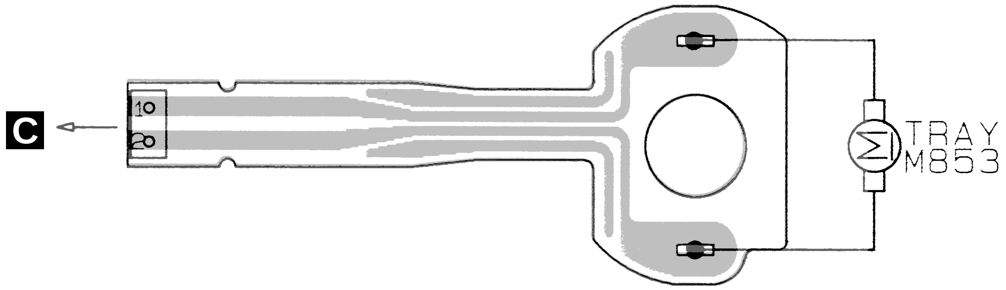

4.6 SWITCH PCB

F SWITCH PCB

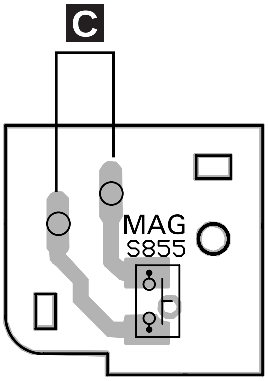

4.7 BUTTON PCB

G BUTTON PCB

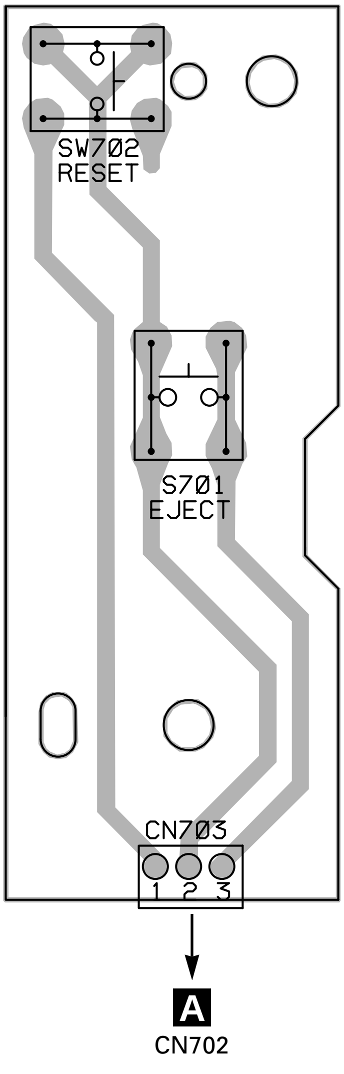

5. ELECTRICAL PARTS LIST

NOTE:

- ● Parts whose parts numbers are omitted are subject to being not supplied.
- ● The part numbers shown below indicate chip components.

Chip Resistor

RS1/○S○○○J,RS1/○○S○○○J

Chip Capacitor (except for CQS.....)

CKS....., CCS....., CSZS.....

=====Circuit Symbol and No.===Part Name Part No.

--- ------ -- -------------------------

EXTENSION UNIT
Consists of
EXTENSION PCB
BUTTON PCB

A **G** Unit Number : HWX2308
Unit Name : Extension Unit

MISCELLANEOUS

IC	101	IC	BA3121F
IC	701	IC	PD5498A
IC	901	IC	PAJ002A
Q	101	Transistor	DTC323TK
Q	102	Transistor	DTC323TK
Q	103	Transistor	IMD2A
Q	701	Transistor	DTA124EK
Q	901	Transistor	2SB1260
Q	902	Transistor	DTA124EK
Q	903	Transistor	2SB1335A
Q	904	Transistor	IMX1
D	102	Chip Diode	MA151WA
D	103	Diode	MA111
D	401	Diode	MA157A
D	402	Diode	MA157A
D	403	Diode	MA157A
D	404	Diode	MA157A
D	405	Diode	MA157A
D	901	Diode	ERA15-02VH
D	903	Diode	ERA15-02VH
L	901	Choke Coil 1.4mH	CTH1129
X	701	Ceramic Resonator 6.29MHz	CSS1310
SW	701	Switch (EJECT)	CSG1004
SW	702	Switch (RESET)	CSG1124

RESISTORS

R	101		RS1/10S182J
R	102		RS1/10S182J
R	103		RS1/10S122J
R	104		RS1/10S122J
R	109		RS1/16S102J
R	110		RS1/16S122J
R	402		RA4C473J
R	403		RS1/16S104J
R	404		RS1/10S681J
R	405		RS1/10S681J
R	406		RS1/10S681J
R	407		RS1/10S681J
R	408		RS1/10S681J
R	701		RN1/10SE4302D
R	702		RN1/10SE1002D
R	704		RS1/10S102J
R	705		RA4C222J
R	706		RA4C104J
R	707		RS1/16S222J
R	708		RS1/16S222J

=====Circuit Symbol and No.===Part Name Part No.

--- ------ -- -------------------------

R	709		RS1/16S102J
R	710		RS1/10S103J
R	711		RS1/10S823J
R	712		RS1/10S222J
R	713		RS1/16S223J
R	714		RS1/10S473J
R	777		RS1/10S104J
R	901		RN1/10SE2003D
R	902		RN1/10SE1003D
R	904		RS1/8S3R9J
R	905		RS1/10S102J
R	907		RS1/10S473J
R	908		RS1/10S473J
R	909		RS1/10S101J
R	910		RS1/10S223J
R	911		RS1/8S121J
R	912		RS1/8S101J
R	913		RS1/10S122J
R	914		RS1/10S182J

CAPACITORS

C	101		CEJA100M16
C	102		CEJA100M16
C	103		CEJA330M10
C	104		CEJA330M10
C	107		CEJA101M10
C	108		CEAL4R7M16
C	401		CCSRCH221J50
C	402		CCSRCH221J50
C	403		CCSRCH221J50
C	404		CKSRYB103K50
C	405		CKSRYB103K50
C	701		CKSRYB103K50
C	702		CKSRYB102K50
C	703		CKSQYB103K50
C	704		CKSQYB104K50
C	705		CKSRYB102K50
C	706		CKSQYB473K50
C	707		CKSQYB473K50
C	708		CCSQCH102J50
C	777		CKSRYB104K16
C	778		CKSQYB103K50
C	901	470μF/25	CCH1127
C	902	470μF/25	CCH1127
C	904		CKSQYB103K50
C	905		CKSQYB103K50
C	906		CSZST330M10
C	907		CKSQYB473K50
C	908		CEJA220M16
C	987		CKSQYB103K50

=====Circuit Symbol and No.===Part Name Part No.

--- ------ --- -------------------------

B Unit Number : CWX2329
Unit Name : CD Core Unit

MISCELLANEOUS

IC	101	IC	UPC2572GS
IC	201	IC	UPD63702AGF
IC	301	IC	BA6997FM
IC	302	IC	LB1836M
IC	601	IC	BA4560F
IC	602	IC	BA4560F
IC	604	IC	TA78L05F
IC	701	IC	PQ05TZ51
Q	101	Transistor	2SD1664
Q	102	Transistor	UMD2N
D	701	Diode	1SR154-400
D	702	Diode	1SR154-400
X	201	Crystal Resonator 16.934MHz	CSS1456
VR	802	Semi-fixed 1kΩ(B)	CCP1338

RESISTORS

R	101	RS1/8S100J
R	102	RS1/8S120J
R	103	RS1/16S102J
R	104	RS1/16S822J
R	105	RS1/16S682J
R	106	RS1/16S183J
R	107	RS1/16S822J
R	108	RS1/16S333J
R	109	RS1/16S683J
R	110	RS1/16S134J
R	111	RS1/16S273J
R	113	RS1/16S222J
R	114	RS1/16S103J
R	115	RS1/16S103J
R	116	RS1/16S102J
R	117	RS1/16S163J
R	118	RS1/16S163J
R	201	RS1/16S104J
R	202	RS1/16S104J
R	301	RA4C332J
R	504	RS1/16S102J
R	505	RS1/16S221J
R	506	RA3C221J
R	511	RS1/16S102J
R	601	RS1/16S103J
R	602	RS1/16S103J
R	603	RS1/16S103J
R	604	RS1/16S103J
R	605	RS1/16S912J
R	606	RS1/16S912J
R	607	RS1/16S912J
R	608	RS1/16S912J
R	609	RS1/16S153J
R	610	RS1/16S153J
R	611	RN1/16SE1502D
R	612	RN1/16SE1502D
R	613	RN1/16SK5601D
R	614	RN1/16SK5601D
R	615	RN1/16SK5601D
R	616	RN1/16SK5601D
R	617	RS1/16S562J
R	618	RS1/16S562J
R	619	RS1/16S101J
R	620	RS1/16S101J
R	801	RS1/10S681J
R	804	RS1/16S622J
R	805	RS1/16S562J

=====Circuit Symbol and No.===Part Name Part No.

--- ------ --- -------------------------

CAPACITORS

C	101		CEV101M6R3
C	102		CKSQYB104K16
C	103		CEV470M6R3
C	104		CKSQYB334K16
C	105		CCSRCH330J50
C	106		CKSRYB103K25
C	107		CEV4R7M35
C	108		CKSQYB273K25
C	109		CCSRCH101J50
C	110		CKSQYB104K16
C	111		CKSRYB332K50
C	112		CKSQYB473K25
C	113		CKSRYB103K25
C	114		CKSRYB391K50
C	115		CCSRCH121J50
C	116		CKSRYB682K25
C	117		CKSQYB333K25
C	118		CKSQYB334K16
C	119		CKSQYB334K16
C	120		CKSQYB224K16
C	121		CKSQYB224K16
C	122		CKSQYB104K16
C	123		CKSRYB472K50
C	124		CKSQYB104K16
C	125		CCSRCH6R0D50
C	126		CKSRYB153K25
C	201		CKSQYB334K16
C	202		CKSQYB104K16
C	205		CEV101M6R3
C	206		CKSQYB224K16
C	207		CKSRYB102K50
C	208		CKSQYB224K16
C	301		CEV101M10
C	302		CKSQYB224K16
C	601		CCSRCH181J50
C	602		CCSRCH181J50
C	603		CCSRCH820J50
C	604		CCSRCH820J50
C	605		CCSRCH820J50
C	606		CCSRCH820J50
C	607		CKSRYB222K50
C	608		CKSRYB222K50
C	609		CCSRCH331J50
C	610		CCSRCH331J50
C	611		CKSQYB104K16
C	612		CKSQYB104K16
C	613		CKSQYB104K16
C	614		CKSQYB104K16
C	615		CEV101M10
C	701	22μF/6.3V	CCH1233
C	702		CKSQYB334K16
C	703		CEV101M6R3
C	801		CKSRYB103K25
C	802		CKSQYB104K16

C Unit Number :
Unit Name : Photo PCB

Q	851	Photo-transistor	PT4800
S	853	Switch(HOME)	CSN1012

=====Circuit Symbol and No.===Part Name Part No.

--- ------ --- -------------------------

D
Unit Number : CWX2032
Unit Name : PCB Unit

S	851	Switch(TRP)	CSN1033
S	852	Switch(DSP)	CSN1033
R	851		RS1/8S473J
R	852		RS1/8S753J

E
Unit Number :
Unit Name : Motor PCB

M	853	Motor Unit(TRAY)	CXB1142

F
Unit Number :
Unit Name : Switch PCB

S	855	Switch(MAG)	CSN1012

Miscellaneous Parts List

D	851	LED	CN504-2
M	851	Motor Unit(SPINDLE)	CXB1395
M	852	Motor Unit(ELV)	CXB1847
M	854	Motor Unit(CARRIAGE)	CXB1394
VR	801	10kΩ	CCW1021
		Pickup Unit(Service)	CXX1235

6. ADJUSTMENT

6.1 CD ADJUSTMENT

1)Precautions

- This unit uses a single power supply (+5V) for the regulator. The signal reference potential, therefore, is connected to REFO(approx. 2.5V) instead of GND.
  If REFO and GND are connected to each other by mistake during adjustments,not only will it be impossible to measure the potential correctly,but the servo will malfunction and a severe shock will be applied to the pick-up. To avoid this,take special note of the following.
  Do not connect the negative probe of the measuring equipment to REFO and GND together. It is especially important not to connect the channel 1 negative probe of the oscilloscope to REFO with the channel 2 negative probe connected to GND.
  Since the frame of the measuring instrument is usually at the same potential as the negative probe,change the frame of the measuring instrument to floating status.
  If by accident REFO comes in contact with GND,immediately switch the regulator or power OFF.

- Always make sure the regulator is OFF when connecting and disconnecting the various filters and wiring required for measurements.

- Before proceeding to further adjustments and measurements after switching regulator ON,let the player run for about one minute to allow the circuits to stabilize.

- Since the protective systems in the unit’s software are rendered inoperative in test mode,be very careful to avoid mechanical and /or electrical shocks to the system when making adjustment.

- This unit is adjusted in a combination with the CD control unit (KEH-M9100ZRN/EW). Each regulator key should be operated at the unit.
  With the KEH-M9100ZRN/EW taken up for reference, a description will be given below concerning how to enter into the test mode, including key operations. The key in the adjustment text is also one of the KEH-M9100ZRN/EW keys.

- How to enter into the test mode
  Switch ACC,back-up ON while pressing the **AF** and **6** keys together.

- Resetting the test mode
  Switch ACC,back-up Off.

- Disc detection during loading and eject operations is performed by means of a photo transistor in this unit.Consequently,if the inside of the unit is exposed to a strong light source when the outer casing is removed for repairs or adjustment,the following malfunctions may occur.
  *During PLAY, even if the eject button is pressed,the disc will not be ejected and the unit will remain in the PLAY mode.
  *The unit will not load a disc.
  When the unit malfunctions this way,either re-position the light source,move the unit or cover the photo transistor.

- When loading and unloading discs during adjustment procedures,always wait for the disc to be properly clamped or ejected before pressing another key. Otherwise, there is a risk of the actuator being destroyed.

- Turn power off when pressing the button **FWD** or the button **REV** key for focus search in the test mode. (Or else lens may stick and the actuator may be damaged.)

- SINGLE/4TRK/10TRK/32TRK will continue to operate even after the key is released.Tracking is closed the moment C-MOVE is released.

- JUMP MODE resets to SINGLE as soon as power is switched off.

6.2 CHECKING THE GRATING

● Checking the Grating After Changing the Pickup Unit

•Note :
Unlike previous CD mechanism modules the grating angle of the pickup unit cannot be adjusted after the pickup unit is changed. The pickup unit in the CD mechanism module is adjusted on the production line to match the CD mechanism module and is thus the best adjusted pickup unit for the CD mechanism module. Changing the pickup unit is thus best considered as a last resort. However, if the pickup unit must be changed, the grating should be checked using the procedure below.

•Purpose :
To check that the grating is within an acceptable range.

•Symptoms of Mal-adjustment :
If the grating is off by a large amount symptoms such as being unable to close tracking, being unable to perform track search operations, or track searching taking a long time, may appear.

•Method :

•Measuring Equipment	•Oscilloscope, Two L.P.F.
•Measuring Points	•E, F, REFOUT
•Disc	•ABEX TCD-784
•Mode	•TEST MODE

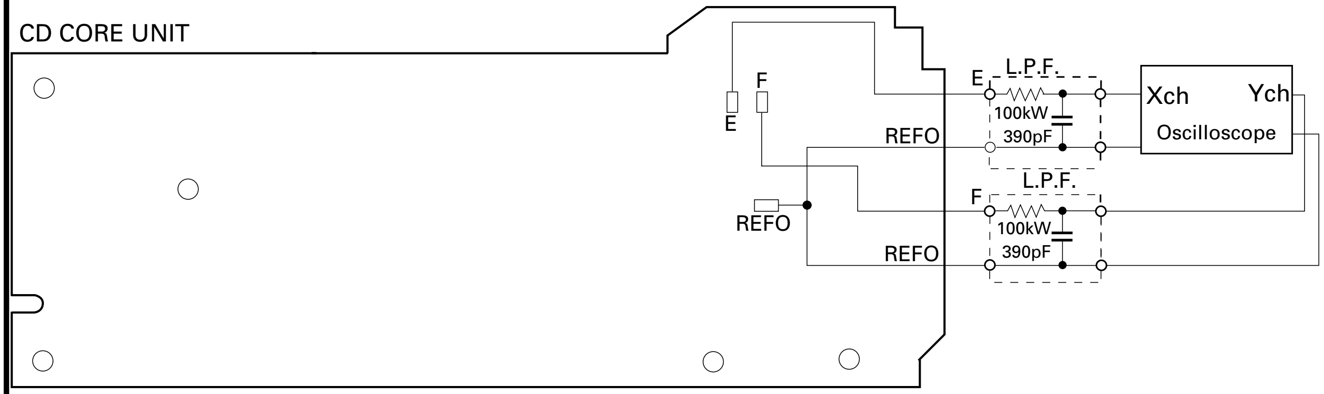

•Checking Procedure
1. In test mode, load the disc and switch the 5V regulator on.
2. Using the **FWD** and **REV** buttons, move the pickup unit to the innermost track.
3. Press key **B** to close focus, the display should read "11". Press key **A** to implement the tracking balance adjustment the display should now read "5".
4. As shown in the diagram above, monitor the LPF outputs using the oscilloscope and check that the phase difference is within 75° . Refer to the photographs supplied to determine the phase angle.
5. If the phase difference is determined to be greater than 75° try changing the pickup unit to see if there is any improvement. If, after trying this a number of times, the grating angle does not become less than 75° then the mechanism should be judged to be at fault.

•Note
Because of eccentricity in the disc and a slight misalignment of the clamping center the grating waveform may be seen to "wobble" (the phase difference changes as the disc rotates). The angle specified above indicates the average angle.

•Hint
Reloading the disc changes the clamp position and may decrease the "wobble".

Grating waveform

Ech → Xch 20mV/div, AC
Fch → Ych 20mV/div, AC

0°

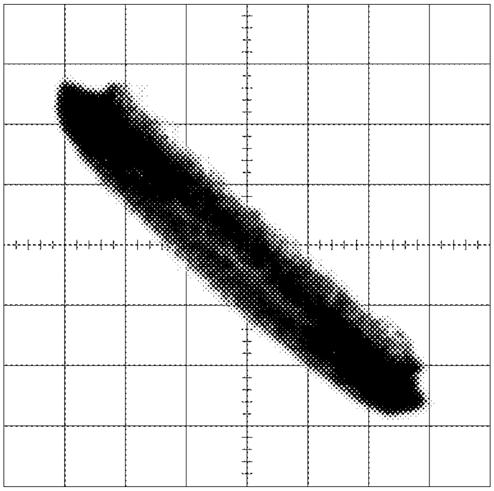

30°

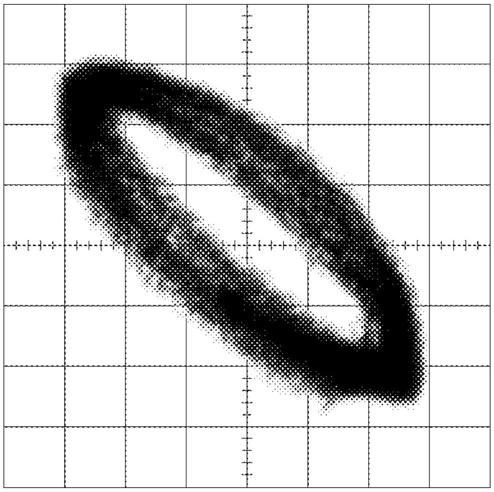

45°

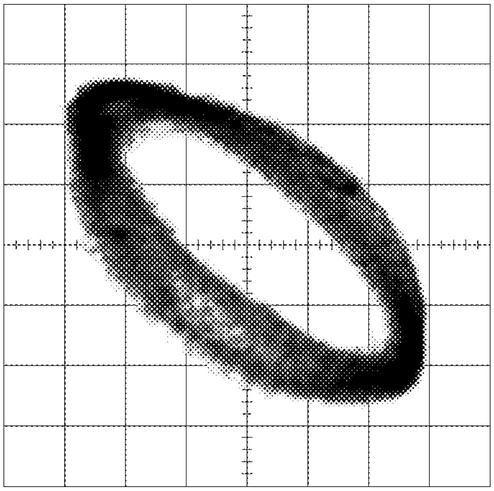

60°

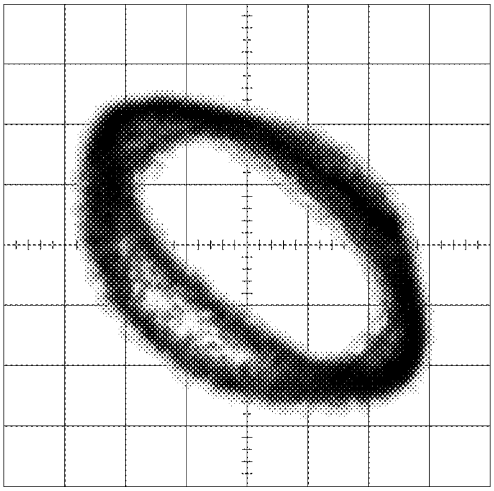

75°

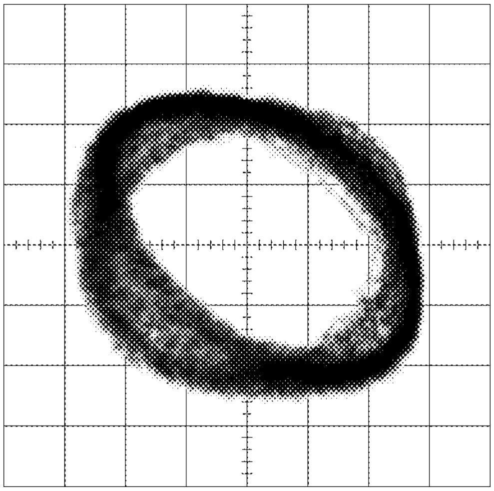

90°

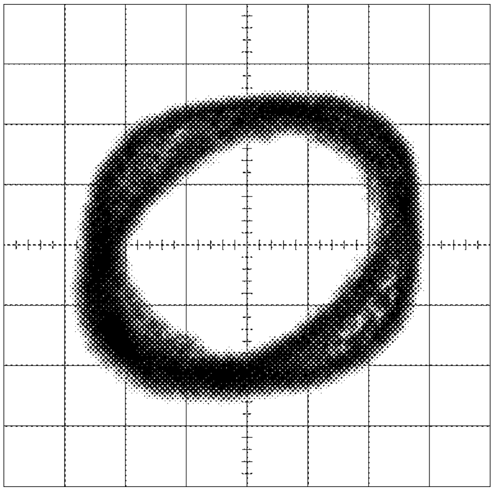

6.3 ADJUSTMENT OF ELEVATION WHEN THE CD CORE UNIT HAS BEEN REMOVED FOR MAINTENANCE

● Adjustment When Error Code 60 is Displayed Because of Malfunctioning Elevation

•Note :

Unlike the conventional mechanisms, the new mechanism detects the height of the stage using slide-variable resistance.

To absorb dislocation of the stage height caused by differences in the mechanism and the CD core unit, adjustment must be made for each CD-mechanism module using a variable resistor.

Normally, readjustment is not needed, as this has been adjusted at the factory. However, adjustment of elevation is required according to the procedure explained below if an elevation error has occurred or if the CD core unit has been removed.

•Purpose :

To adjust and confirm whether or not elevation operates correctly.

•Adjustment Method :

•Measuring Equipment: Millivoltmeter

•Measuring Points : EREF, EPVO

•Setting : Without a magazine in Test mode

With the mechanism placed upside-down (Place the CD mechanism module so that the CD core unit is above.)

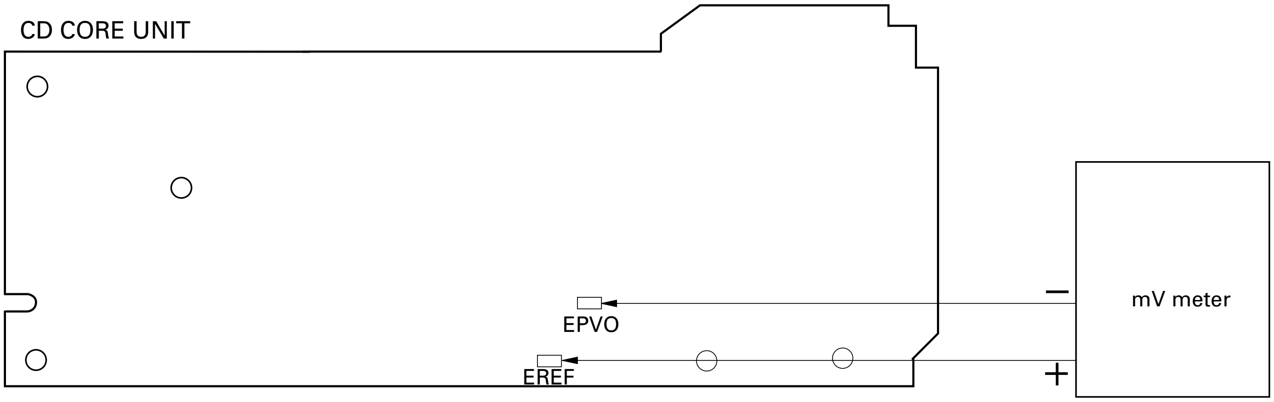

•Confirmation Procedure

Examples of display

1. Enter Test mode, then select Multi-CD player.

TRACK

2. Press key **A** to enter Mechanism Test mode.

TRACK 73

3. Press key **A** twice to specify the amount of movement.

The amount of movement changes each time key **A** is pressed.

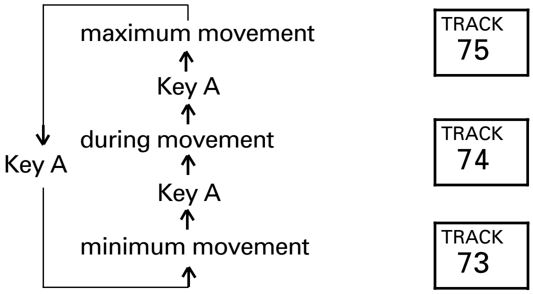

Examples of display

key **B**

TRY mode		ELV mode
TRACK 76	↔	TRACK 73
TRACK 77	↔	TRACK 74
TRACK 78	↔	TRACK 75

4. Press key **B** to set ELV/TRAY mode to TRAY.

5. Press key **FWD** to release the clamp and return the tray to the magazine.

6. Press key **B** to enter Elevation Move mode.

7. Use key **FWD/REV** to operate elevation and set if to the graduation of the fourth step (Fig. 1).

8. Make the adjustment.
   Use VR802 to adjust the difference in potential between EREF and EPVO to 0 ±20 mV.

9. When adjustment is completed, press key **BAND/REL** to exit Mechanism Test mode.

TRACK
7X

10. Confirm operation of the mechanism.
    Place the mechanism horizontally (CD core unit below). Take care not to short-circuit the PCB.

TRACK

11. Confirm the height of the stage. Use the 6 key to select Disc No.6.

    Check if the stopper bend of the clamp lever is engaged in the groove of the frame stopper (Fig. 2-4).

•**Note :**
The stopper bend will be pressed downward into the groove for final clamping. Confirm the engagement position of the stopper bend.

•If the stopper bend is engaged in the center and pressed downward, adjustment is completed. Go to step 15.

•If the stopper bend is dislocated, check the amount of dislocation by following step 12.

12. To see the amount of dislocation, place the mechanism upside-down. If the stopper bend has been dislocated in the direction of the first CD, turn VR802 to the left(Fig. 2).

    To lower the stage toward the sixth step by 0.1 mm, reduce the voltage of EREF (adjusted in step 8) by 20 mV.

    If the stopper bend has been dislocated in the direction of the sixth CD, turn VR802 to the right(Fig. 4).

    To raise the stage toward the first step by 0.1 mm, increase the voltage of EREF (adjusted in step 8) by 20 mV.

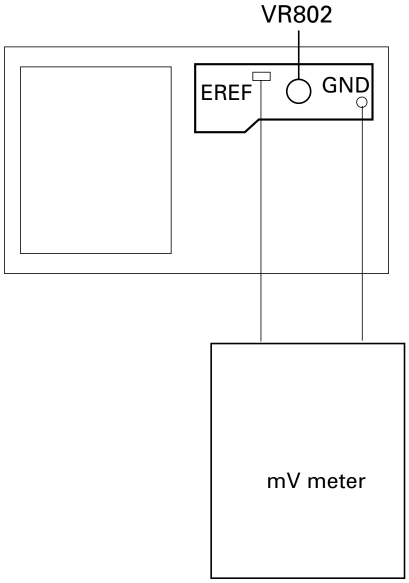

13. Place the mechanism horizontal. Go back to step 11 to reconfirm the stage height.

14. When adjustment of the stage height is completed, proceed as follows:

15. Press the **EJECT** switch.

16. Once operation of the mechanism has stopped, turn the power OFF.

17. Wait more than one minute after the power is turned off, then turn the power ON and insert a magazine.

18. Check if the mechanism operates correctly with the first and fourth CDs.

19. If the mechanism operates properly, adjustment is completed. If the mechanism operates improperly, make the adjustment again.

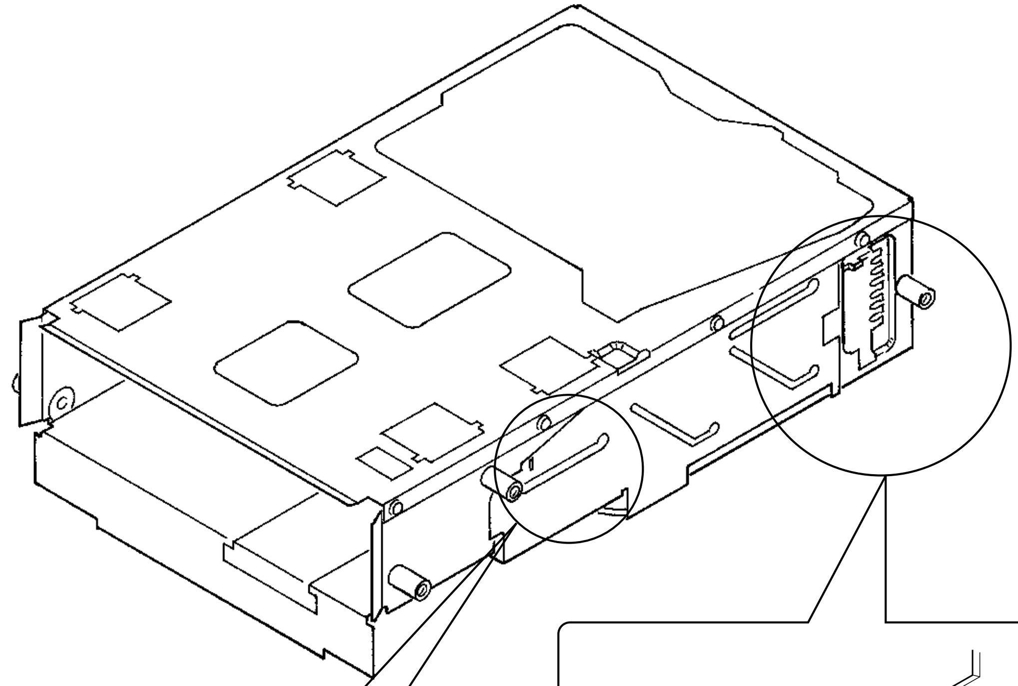

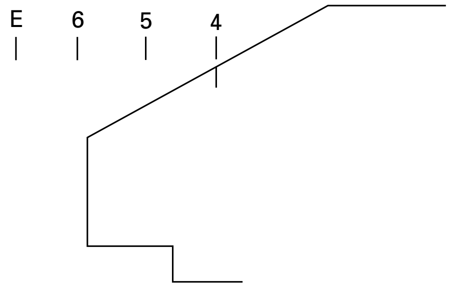

Adjust to the graduation of the fourth CD.

Fig. 1

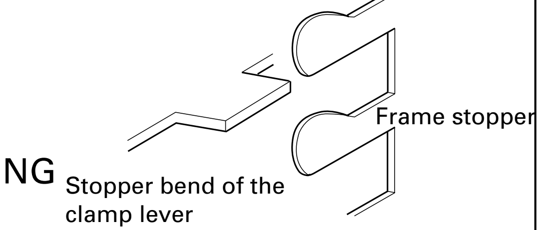

Dislocated toward the first CD.
Fig. 2

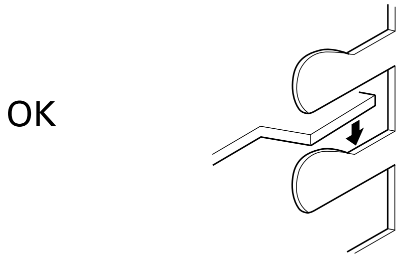

Engaged in the center and pressed downward.
Fig. 3

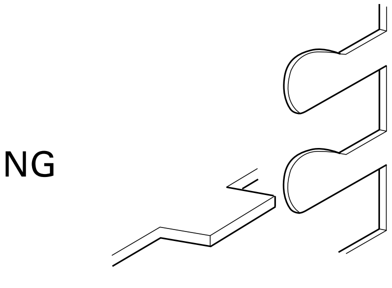

Dislocated toward the sixth CD.
Fig. 4

7. GENERAL INFORMATION

7.1 IC

● Pin Functions (PD5498A)

Pin No.	Pin Name	I/O	Format	Function and Operation
1	VDIN	I		Power supply short sensor input
2–5	NC			Not used
6	XA0	O	NM	Control signal distinguishing data from microcomputer
7	$\overline{\text{XSCK}}$	O	NM	LSI clock output
8	XSO	O	NM	LSI data output
9	XSI	I		LSI data input
10	$\overline{\text{XSTB}}$	O	C	CD LSI strobe output
11	$\overline{\text{XRST}}$	O	C	CD LSI reset output
12–14	NC			Not used
15	$\overline{\text{BSENS}}$	I		Back up power sense input
16	$\overline{\text{BRST}}$	I		P-BUS reset input
17	$\overline{\text{BSRQ}}$	O	C	P-BUS service request output pin
18	$\overline{\text{BRXEN}}$	I/O	C	P-BUS reception enable input/output pin
19	$\overline{\text{BSCK}}$	I/O	C	P-BUS serial clock input/output
20	BSO	O	C	P-BUS serial data output
21	BSI	I		P-BUS serial data input
22	$\overline{\text{EJSW}}$	I		Eject signal input
23	$\overline{\text{MAG}}$	I		Magazine lock switch
24	CNVSS	I		GND
25	$\overline{\text{RESET}}$	I		Reset input
26	$\overline{\text{POWER}}$	O	C	CD +5V control
27	CONT	O	C	Server driver power control output (CD)
28	XIN	I		Crystal oscillating element connection pin
29	XOUT	O		Crystal oscillating element connection pin
30	VSS			GND
31–57	NC			Not used
58	MIRR	I		Mirror detector input
59	LOCK	I		Spindle lock detector input
60	FOK	I		FOK signal input
61–64	NC			Not used
65	I1X3	O	C	Motor driver control output
66	I2	O	C	Motor driver control output
67	I4	O	C	Motor driver control output
68	CDMUTE	O	C	CD mute output
69	$\overline{\text{ADENA}}$	O	C	A/D reference voltage output
70	$\overline{\text{TESTIN}}$	I		Test program mode input
71	VCC			5V
72	VREF	I		A/D converter reference voltage input
73	AVSS	I		A/D GND
74,75	NC			Not used
76	DISK	I		Disc detector input
77	EPVO	I		Voltage input from ELV position sense
78	EREF	I		Voltage input from ELV
79	MSW	I		Disc sense timing input and tray position input
80	TEMP	I		Temperature detector

*PD5498A

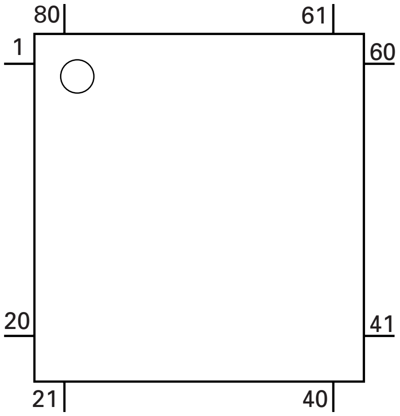

Format	Meaning
C	C MOS
NM	Middle N channel open drain

IC's marked by* are MOS type.
Be careful in handling them because they are very liable to be damaged by electrostatic induction.

7.2 DIAGNOSIS

7.2.1 DISASSEMBLY

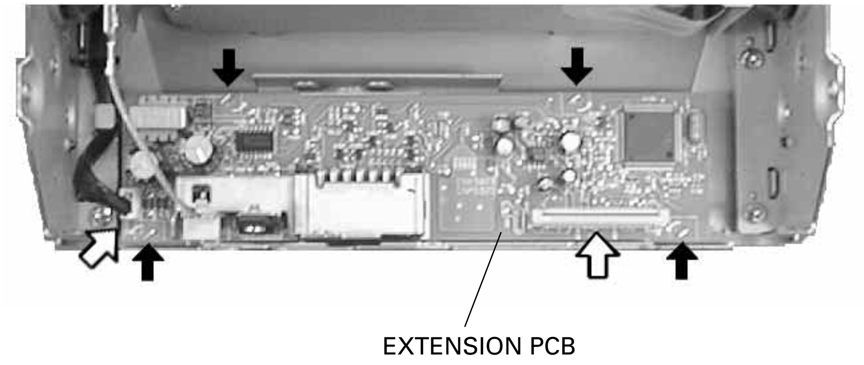

● **Removing the Case (not shown)**

1. Remove the eight screws and then remove the upper case.

● **Removing the Extension PCB**

1. Remove the two connectors.
2. Stretch the claw indicated by arrow and then remove the extension PCB.

Note : Before disassembling the CD mech module, turn the spring holder so that the spring is positioned horizontally. After reassembling, return the spring to the vertical position.

● Removing the Pick-up Unit

1. Attach the Short Pin onto the Flexible PCB of the Pick-up Unit. (Fig.5)
2. Remove the Flexible PCB from the connector. (Fig.6)
3. Remove the Torsion Spring which is pressed against the leading edge of the Feed Screw. (Fig.6)
4. Remove the Screw and Pulley Cover. (Fig.6)
5. Remove the Belt and the Pick-up Unit with the Feed Screw still attached. (Fig.6)
6. Lift the Tabs of the rack section of the Holder and remove the Feed Screw. While doing so, be careful not to lose the Bearings on the ends of the Feed Screw. (Fig.6)

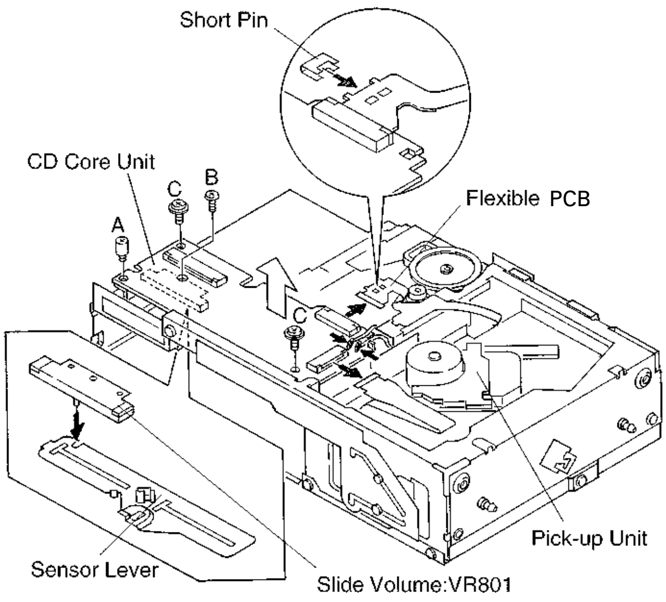

Fig. 5

● Removing the CD Core Unit (Fig.6)

1. After procedures 1 and 2 for removing the Pick-up Unit, remove the connector.
2. Remove the Elevation Motor Assy lead wires marked with an arrow which are soldered onto the CD Core Unit.
3. Remove screw (A), screw (B) and screws (C)(2 screws), then remove the CD Core Unit.

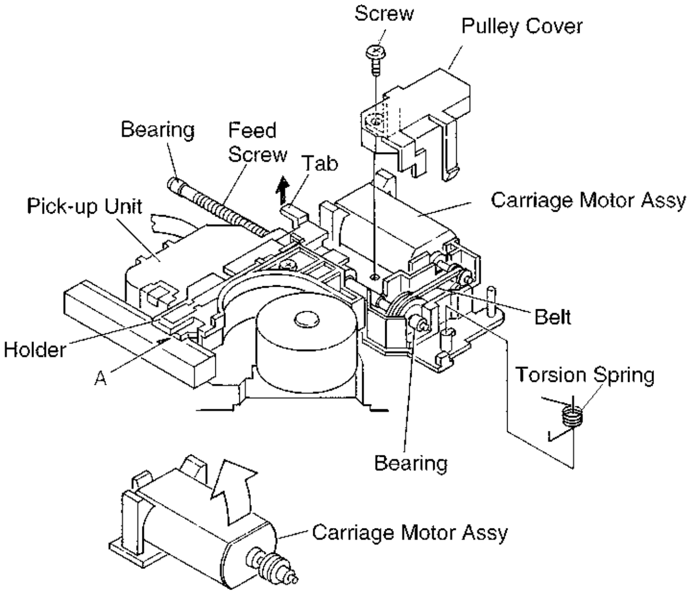

Fig. 6

7.2.2 TEST MODE

● Flow Chart

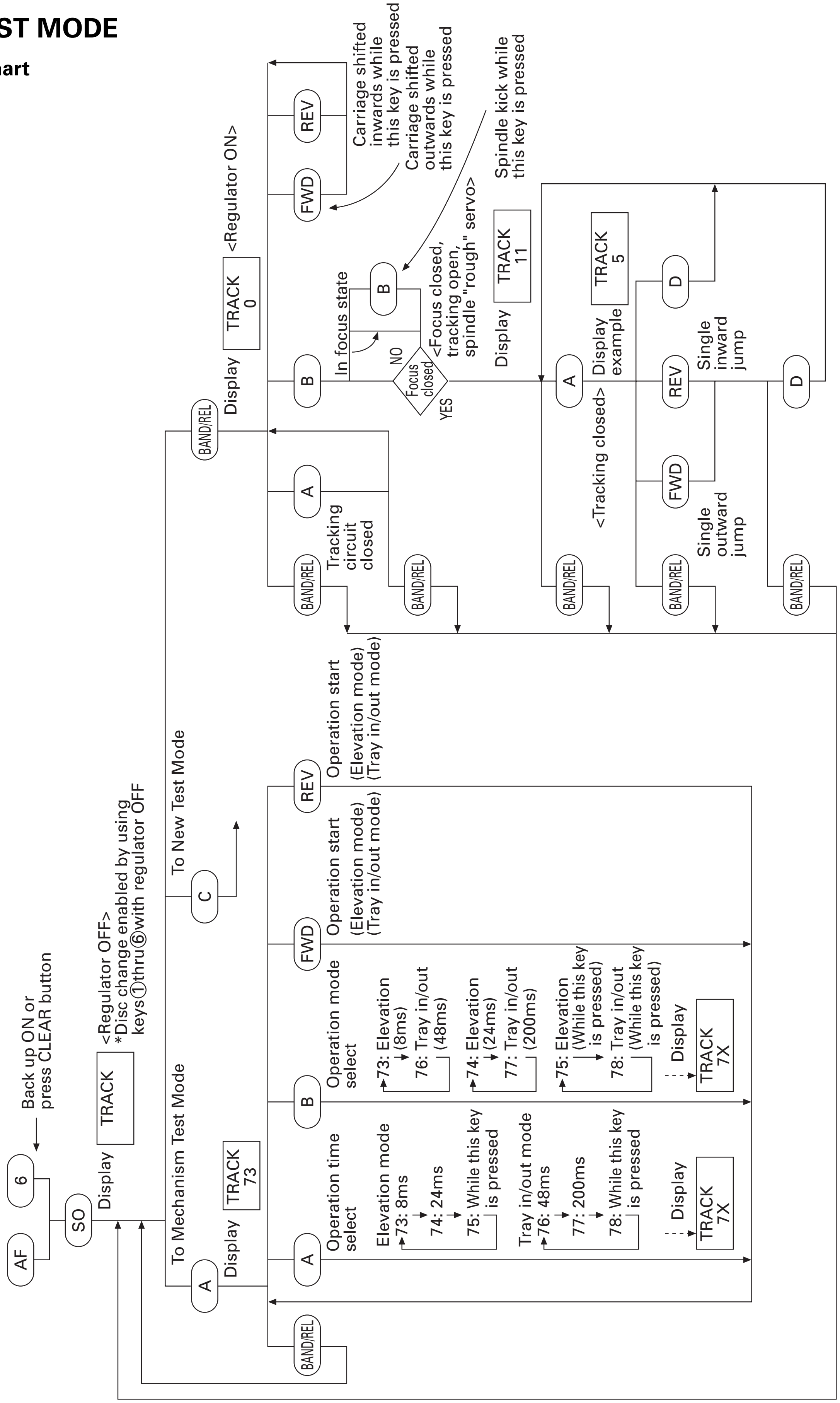

● New Test Mode(aging operation and setup analysis)

The single CD player plays in normal mode. After being set up, it will display FOK (focus), LOCK (spindle), subcode, sound skip, protection against a mechanical error or the like, occurrence of an error, cause and time of an expiry, if any, (and disc number)

During the setup, the CD software operation status (internal RAM and C-point)is displayed.

(1) How to enter NEW TEST Mode

See the test mode flow chart Page 43.

(2) Relations of keys between TEST and NEW TEST Modes

Keys	Test Mode		New Test Mode	
	Regulator OFF	Regulator ON	PLAY in progress	Error Occurred, Protection Activated
BAND	Regulator ON	Regulator OFF	—	Time of occurrence/ cause of error select
FWD	—	FWD-Kick	FF/TRACK+	—
REV	—	REV-Kick	REV/TRACK-	—
A	—	Tracking close	SCAN	—
D	—	Tracking open	MODE	—
B	—	Focus close	—	—
	—	Focus open	—	—
	—	Jump OFF	—	—
C	To New Test Mode	Jump Mode Select	AUTO/MANU	TRACK No./ time of occurrence select

Operations,such as EJECT, CD ON/OFF, etc. are performed normally

(3) Indicating an Operation Status During Setup

Status No.	Description	Protection operation
01	Carriage home mode started	None
02	Carriage moving inwards	10-second time out, Home switch failed
03	Carriage moving outwards	10-second time out, Home switch failed
05	Carriage moving outwards	None
11	Setup started	None
12	Spindle turn/Focus search started	None
13	Waiting for focus closure (XSI=L)	Failure to close focus
10,14	Waiting for focus closure (FOK=H)	Failure to close focus
15, 16, 17	Focus closed, Tracking open	Focus disrupted
18	During focus AGC	Focus disrupted
19	During tracking AGC	Disrupted focus
20	Waiting for MIRR, LOCK or subcode read Carriage closed, SPINDLE=ADAPTIVE	Focus disrupted, MIRR NG, Failure to lock, failed to read subcode

7.2.3 CONNECTOR FUNCTION DESCRIPTION

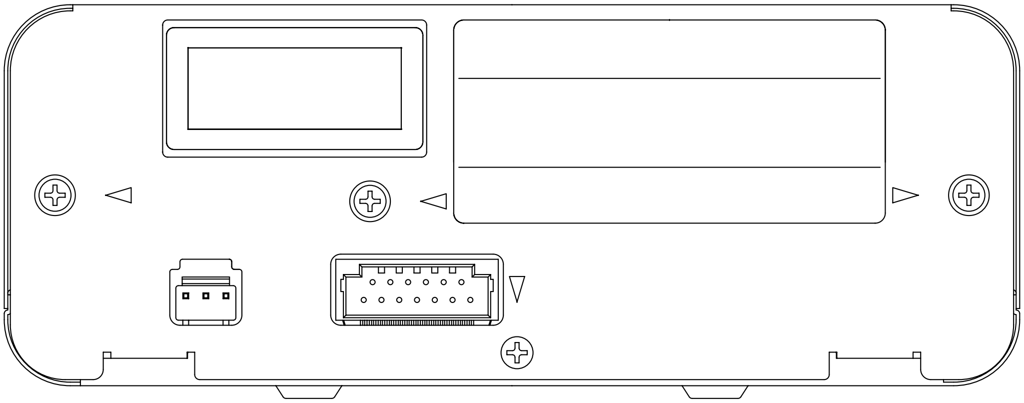

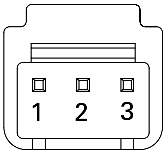

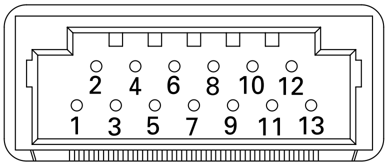

1. GND
2. NC
3. BATT

1. L-
2. L+
3. R-
4. R+
5. GND
6. GND
7. NC
8. GND
9. BSRQ
10. BRST
11. BRXEN
12. BSCK
13. BDATA

8. OPERATIONS AND SPECIFICATIONS

8.1 OPERATION

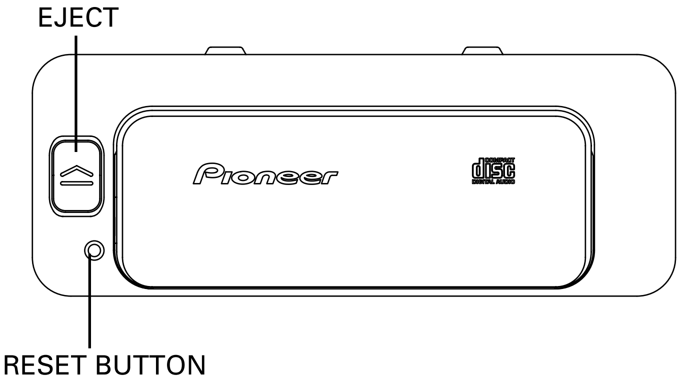

8.2 SPECIFICATIONS

General

System	Compact disc audio system
Usable discs	Compact Disc
Signal format	Sampling frequency:44.1 kHz
	Number of quantization bits: 16; linear
Power source	14.0 V DC
	10.5 –16.0 V
Max. current consumption	3.0 A
Weight	2.7 kg
Dimensions	200(W)x75(H)x300(D)

Audio

Frequency characteristics	20—20.000(±1dB)
Signal-to-noise ratio	80dB or more(1kHz)(20kLPF,ICE-A)
Distortion	0.08% or less(1kHz)(20kLPF)
Dynamic range	80dB or more
Output level	500mV±100mV(1kHz,0dB)
Number of channels	2(stereo)

Note:
Specifications and design are subject to possible modification without prior notice due to improvements.

PIONEER
The Art of Entertainment

Service Manual

ORDER NO.
CRT1857

CD MECHANISM MODULE

CX-652

- **This service manual describes operation of the CD mechanism incroporated in models listed in the table below.**
- **When performing repairs use this manual together with the specific manual for model under repair.**

Model	Service Manual	CD Mechanism Module	CD Mechanism Unit
CDX-P626S/UC	CRT1854	CXK4410	CXA9005
CDX-P620S/UC, ES, EW	CRT1854	CXK4400	CXA9005
CDX-FM629S/UC	CRT1858	CXK4410	CXA9005
CDX-FM627S/UC, ES, EW	CRT1858	CXK4400	CXA9005
CDX-FM623S/UC, ES, GB	CRT1859	CXK4400	CXA9005

CONTENTS

PIONEER ELECTRONIC CORPORATION 4-1, Meguro 1-Chome, Meguro-ku, Tokyo 153, Japan
PIONEER ELECTRONICS SERVICE INC. P.O.Box 1760, Long Beach, CA 90801-1760 U.S.A.
PIONEER ELECTRONIC [EUROPE] N.V. Haven 1087 Keetberglaan 1, 9120 Melsele, Belgium
PIONEER ELECTRONICS ASIACENTRE PTE.LTD. 501 Orchard Road, #10-00, Lane Crawford Place, Singapore 0923

K-FFD. JUNE 1996 Printed in Japan

1. SERVICING PRECAUTIONS

1) Do not carry out any work holding the upper surface of the magazine insert slot on the mechanism, marked by an arrow, since it deforms easily.
2) When the Stage Mechanism is positioned below the 5th level, it protrudes below the chassis. Do not leave it in this position as it may become damaged.

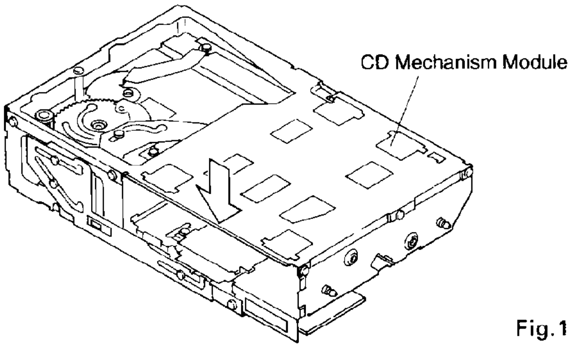

Fig.1

2. DISASSEMBLY

● Removing the Pick-up Unit

1. Attach the Short Pin onto the Flexible P.C.Board of the Pick-up Unit.(Fig.2)
2. Remove the Flexible P.C.Board from the connector.(Fig.2)
3. Remove the Torsion Spring which is pressed against the leading edge of the Feed Screw.(Fig.3)
4. Remove the Screw and Pulley Cover.(Fig.3)
5. Remove the Belt and the Pick-up Unit with the Feed Screw still attached.(Fig.3)
6. Lift the Tabs of the rack section of the Holder and remove the Feed Screw. While doing so, be careful not to lose the Bearings on the ends of the Feed Screw.(Fig.3)

● Removing the CD Core Unit (Fig.2)

1. After procedures 1 and 2 for removing the Pick-up Unit, remove the connector.
2. Remove the Elevation Motor Assy lead wires marked with an arrow which are soldered onto the CD Core Unit.
3. Remove screw (A), screw (B) and screws (C)(2 screws), then remove the CD Core Unit.

● Precautions for Installing the CD Core Unit

If the sensor lever of the Linear Position Sensor (Slide Volume: VR801) of the CD Core Unit is not inserted properly in the U-shaped Groove the elevation operation may not function properly. When installing the CD Core Unit in the CD Mechanism Unit insert the Linear Position Sensor (Slide Volume: VR801) securely in the U-shaped Groove.

● Removing the Carriage Motor Assy (Fig.3)

1. After procedures 3 and 4 for removing the Pick-up Unit, remove the Belt, and the Carriage Motor Assy.

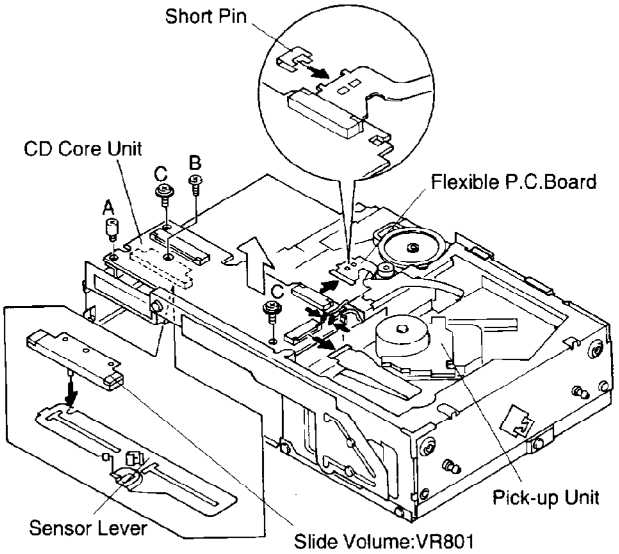

Fig.2

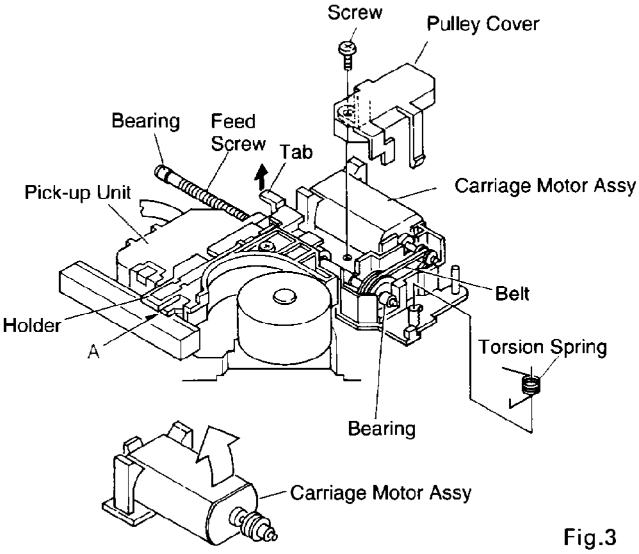

Fig.3

● Removing the Spindle Motor Assy

1. Turn the Tray Motor using an 8V DC voltage supply, and move the Tray Extending Arm.
2. Remove screw (D) and remove the Clamp Spring.
3. Remove the Clamper.
4. Remove the two screws (E) and remove the Spindle Motor.

● Precautions for Installing the Spindle Motor Assy

When installing the Spindle Motor Assy be sure the lead wires trail forward the magazine insert slot. Furthermore, make sure that the Side Pressure Holder is correctly pressed against the Shaft.

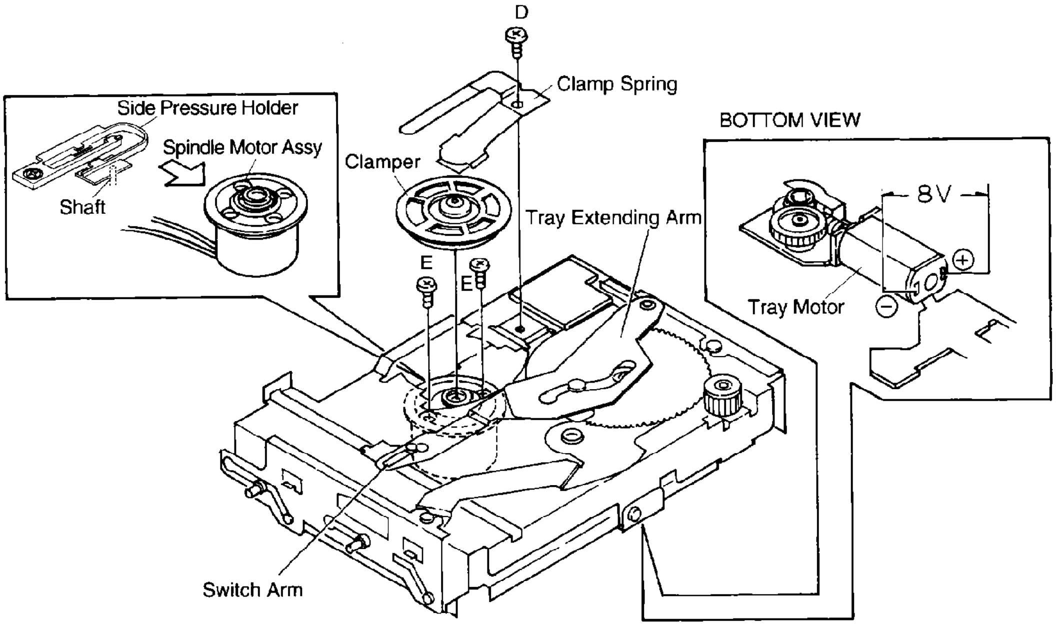

Fig.4

● Removing the Tray Motor Assy

1. Remove screw (F).
2. Remove the Polyslider and the Two-level Gear.
3. By moving the Front Lever, bring the Stage Mechanism to the position between markings "6" and "E" on the Front Lever.
4. Remove screw (G).
5. Moving the Front Lever again, bring the Stage Mechanism to the highest level.
6. Remove the Tray Motor Bracket (not shown in diagram).
7. Remove the two screws and remove the Tray Motor Assy (not shown in diagram).

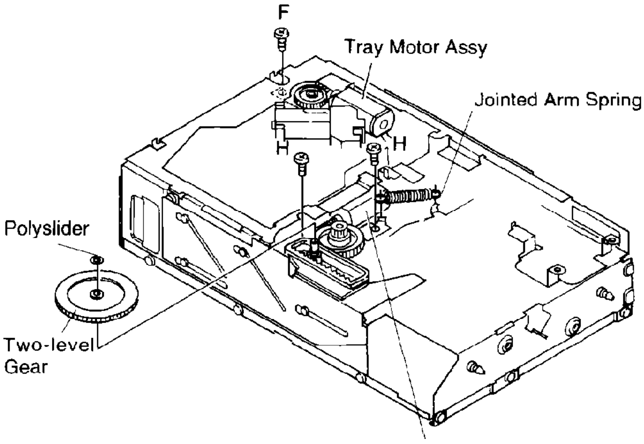

Fig.5

● Removing the Elevation Motor Assy

1. Remove the Jointed Arm Spring.
2. Remove the two screws (H) and remove the Motor Bracket.
3. Remove the two screws and remove the Elevation Motor Assy (not shown in diagram).

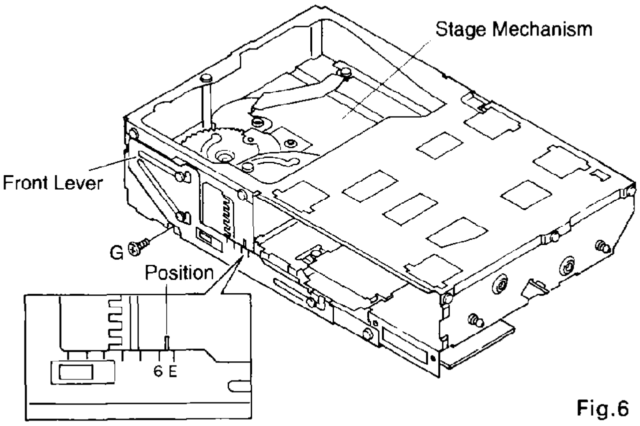

Fig.6

● Removing the Stage Mechanism

1. Remove the Two-level Gear.
2. Remove the screw (J), and remove the Rack.
3. When the Front Lever is moved until the Stage Mechanism is at its lowest position, the Front Lever, Rear Lever and Sensor Lever may all be removed at the same time.
4. Remove the nine screws (K), and screw (L) and then remove the Upper Frame. Do this carefully, as the Coil Spring of the Multiple Insertion Prevention Mechanism may fall off.
5. Remove the five screws (M) and screw (N) and remove the Stage Mechanism by separating the front and back of the Frame.

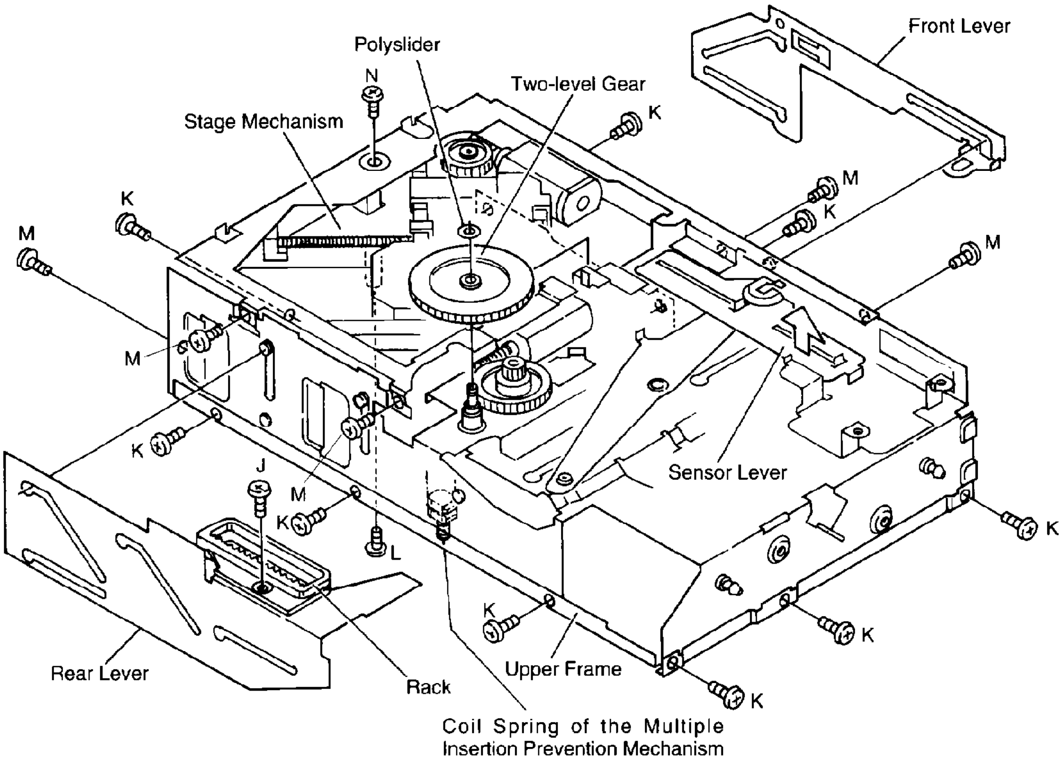

Fig.7

3. MECHANICAL DESCRIPTION

● Inserting the Magazine

1. Inserting the magazine while countering the spring force of the EJECT Lever, the Lock Arm will slide along the groove on the reverse side of the magazine and lock into place (due to the Torsion Spring on the reverse side of the Lock Arm).

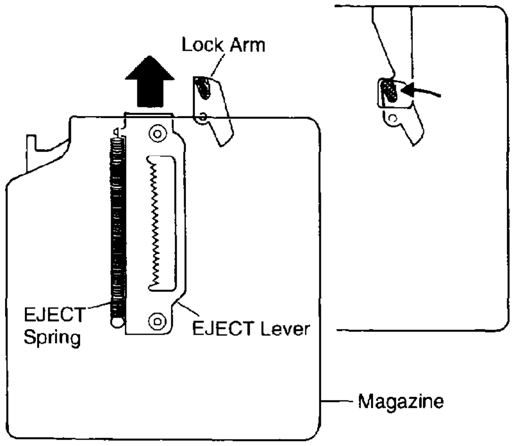

Fig.8

2. The magazine lock is detected when the Sensor Arm moves along the EJECT Lever Cam Section and presses against the MAG Switch (S803) located on the CD Core Unit. Initially, the Sensor Arm is held by the cam section of the EJECT Lever until the Magazine Lock Arm is pushed off by the groove on the reverse side of the magazine. When the Lock Arm is pushed off the cam section is released, but is held again by the Lock Arm. When the magazine lock is released, the Sensor Arm presses the MAG Switch (S803).

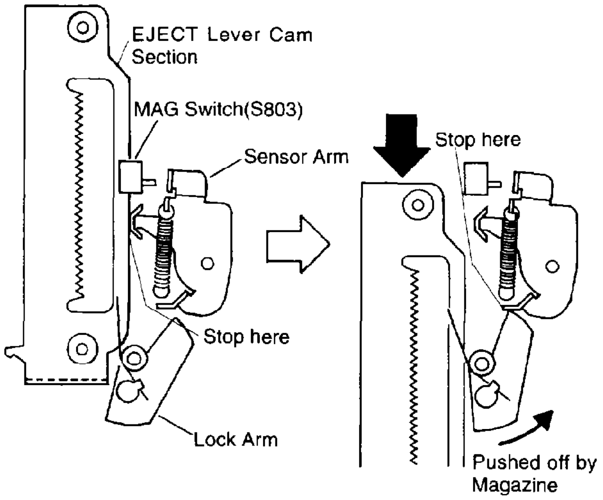

State the not inserted Magazine yet Immediately Magazine Lock

Fig.9

● Elevation Operation

The drive operation is the same as the CX-624, except that there is no motive force cancellation spring. There is a spring which is similar to this spring but its effect is the opposite in function.

● Elevation Detection

When the Rear Lever is driven the Front Lever and Sensor Lever are also driven via the Jointed Arm. The voltage is detected, and drive initiated, when the knob of the Linear Position Sensor (Slide Volume: VR801) enters the U-shaped Groove of the Sensor Lever.

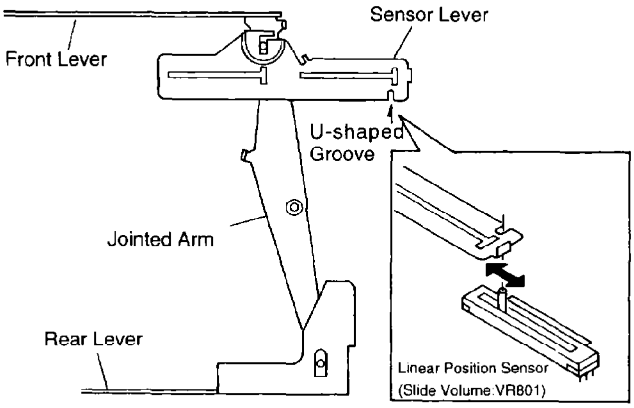

Fig.10

● Operation from the Tray Dispenser to the Clamp

When the Loading Motor drives the Cam Gear, the Tray is pulled out by the Tray Extending Arm which moves along the gear cam, and clamping is performed by sliding the Clamp Lever. During disk loading the Carriage Chassis and Spindle Motor hold positions where they do not get in the way of the Tray. However when the Cam Gear starts to turn (after completion of tray dispension) the Clamp Lever moves and the Shaft of the Carriage Chassis is lifted by the Stepped Holes and the Carriage Chassis is drawn to the Stage Chassis. The Spindle Motor then move to the disk and lifts it from the Tray.

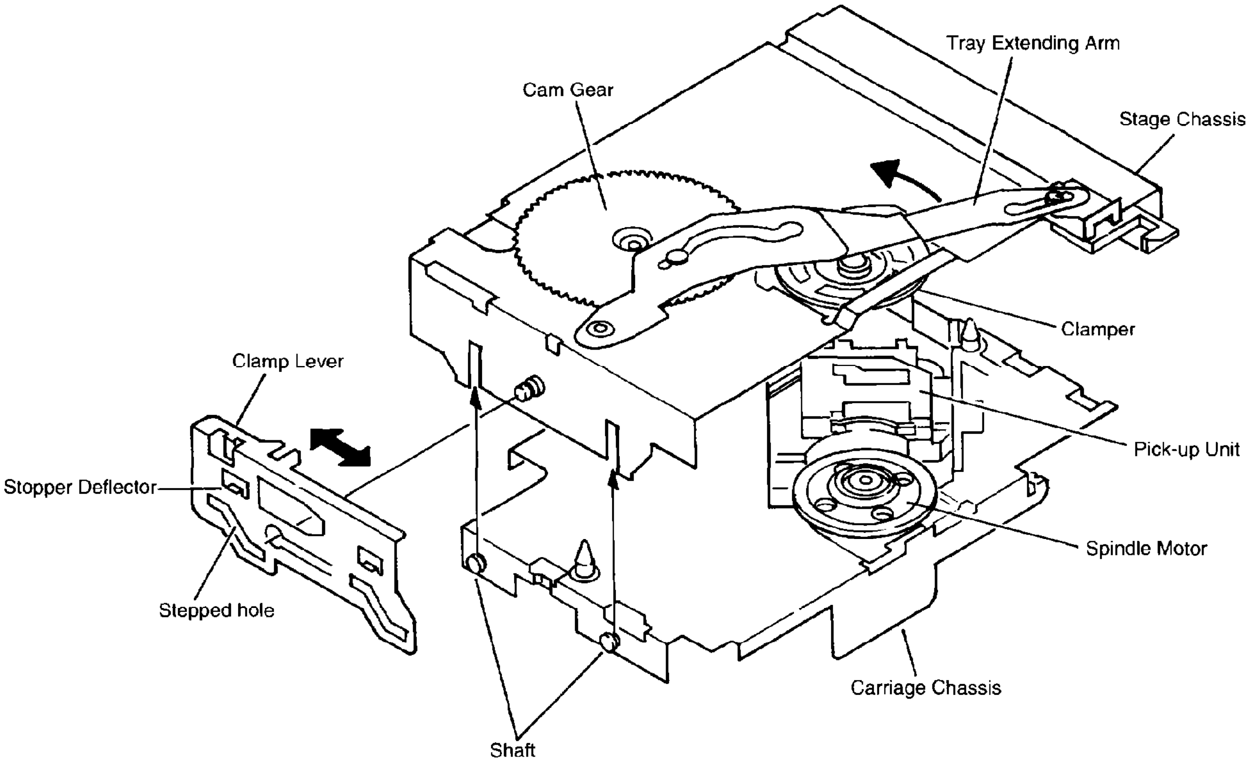

Fig.11

● Stabilizing the Elevation Rattle

During clamping, the Clamp Lever slides and moves the Carriage Chassis. At the some time, the Stopper of the Clamp Lever enters the Stopper of the Frame, controlling the up and down motion of the stage section.

Due to the elevation structure, the shaft of the Stage Chassis is pushed down and the stage section is stabilized. The Elevation Motor doesn't stop when the lowered position is detected, but a fixed interval after the limit of motion of the structure has been reached.

At this point, if some rattling space as shown in figure 12 is not provided, the shaft of the Stage Chassis pushes on the Clamp Lever directly (marked with ★). No force is transmitted to the Carriage Chassis and rattling occurs, resulting in a deterioration of the anti-vibration characteristics. Therefore, to reduce the rattling at each section an improvement in the anti-vibration characteristics is made by providing enough rattling space to reduce the rattling at each section and ensuring that the force is transmitted in the order of the Stage Chassis → Carriage Chassis → Clamp Lever → Frame.

* The spring of the Jointed Arm is set in such a manner that these relationships do not fall out of place.

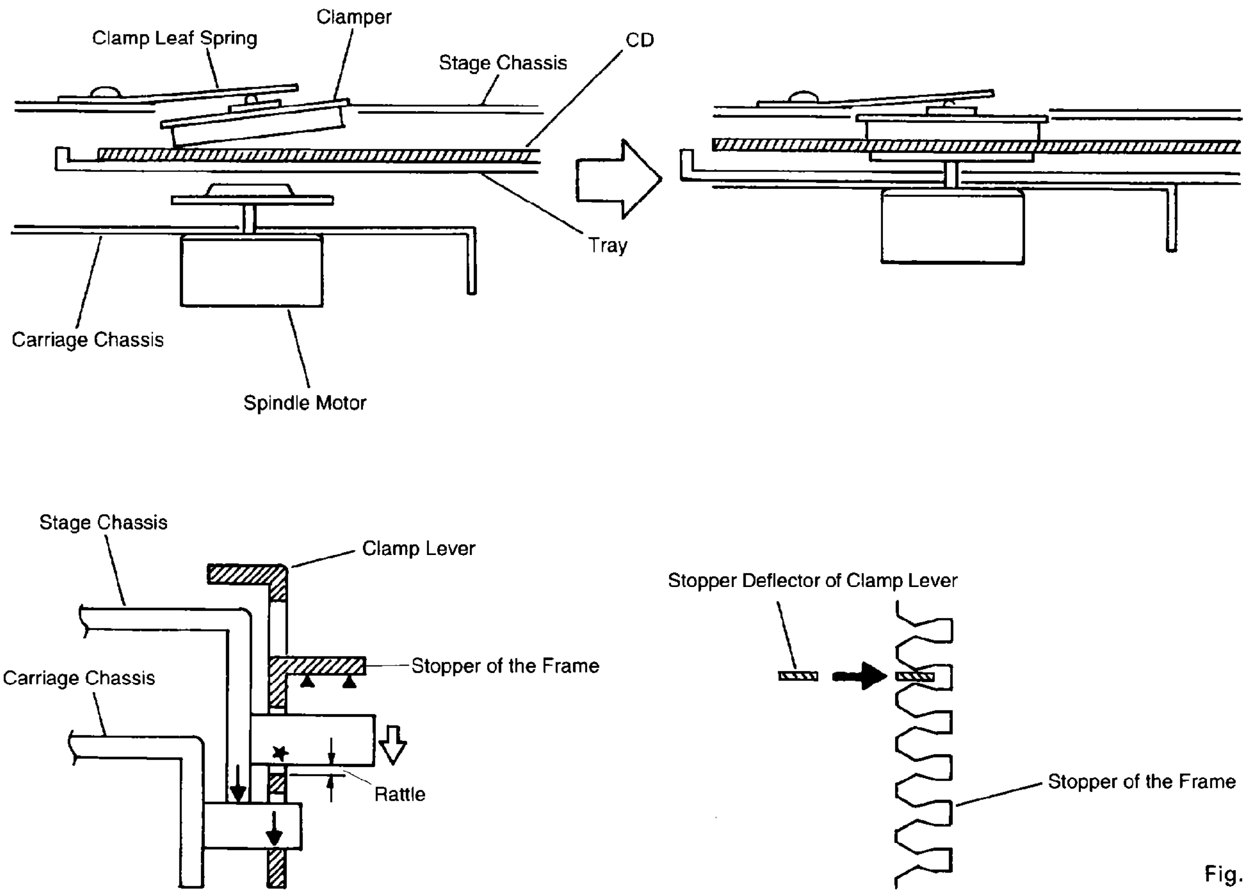

Fig.12

● Disk Detection

DSP Switch (S852) is turned ON and OFF by the DSP Switch Lever driven by the Cam Gear which controls the tray extending motion. The Photo Sensor (Q851, D851) is timed with this ON and OFF status, detecting the existence and non-existence of the disk as well as the type of disk.

● Tray Extension and Retraction Detection

A) Clamp

When the clamp motion of the Clamp Lever is complete the Jointed Arm moves and the protruding section of the arm pushes the TRP Switch (S851) ON via the Leaf Spring.

B) Tray retraction

When the tray retracts the Switch Arm, which operates on the same fulcrum as the Tray Extending Arm, moves and the TRP Switch (S851) is pushed ON by the protruding section of the arm via the Leaf Spring.

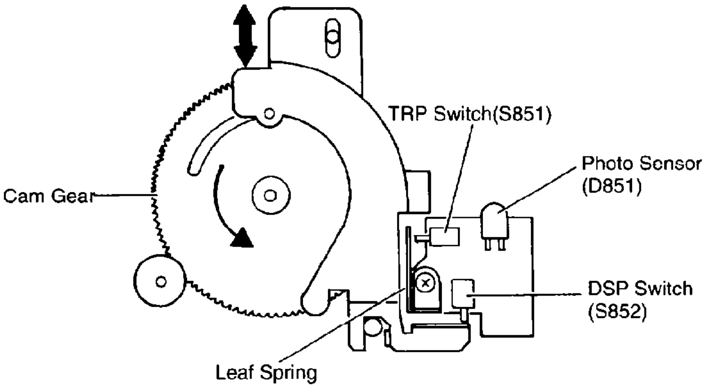

Fig.13

● Over-extension Prevention Structure of the Tray

In standby mode the Stoppers are maintained in a neutral position by the upper and lower Springs. When the Tray is being dispensed the Stoppers are pushed apart by their Tapers. In this condition, even if an impact force is applied and the Tray is pushed outward, the Tray does not actually get dispensed due to the straight section of the Stopper.

Further, since force F2 of the lower Spring is set smaller that force F1 of the upper Spring (F1>F2) while the Stoppers are being pushed apart, the dispensed Tray is being pushed downward at all times (F=F1-F2), preventing vertical rattling of the Tray due to vibrations.

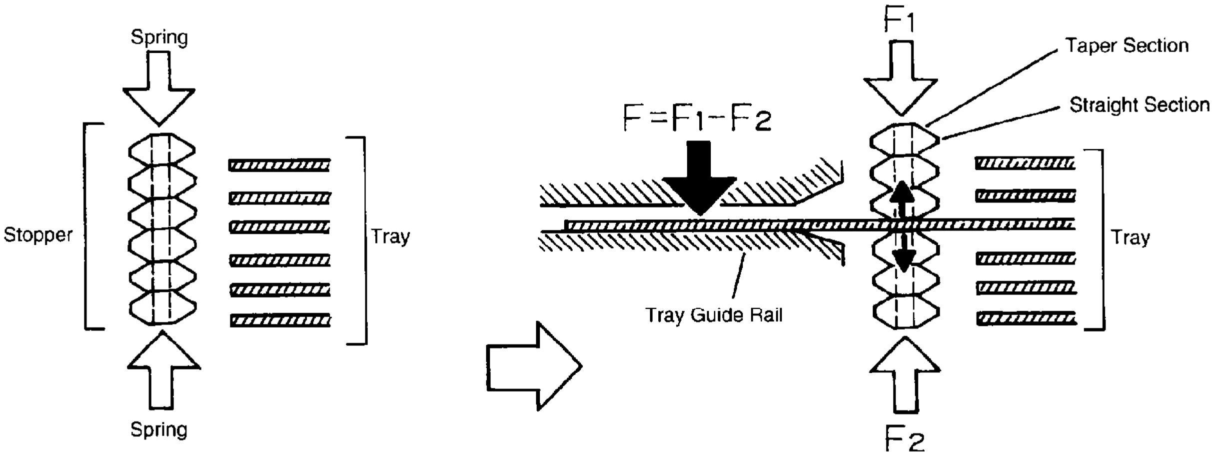

Fig.14

● Magazine Ejection

When the Lever is driven beyond the lowest position of the elevation the bent section of the Rear Lever pushes on the boss of the Lock Arm, releasing the lock. The magazine is ejected by the EJECT Lever.

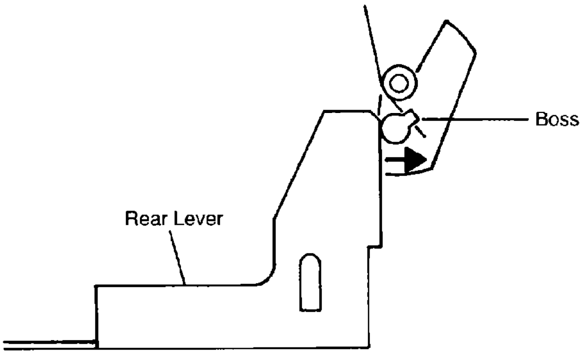

Fig.15

4. CIRCUIT DESCRIPTION

4.1 POWER SUPPLY UNIT CONFIGURATION

The power supply unit of this system consists of 4 power sources, VD(8.6V), 5VA(5V), 5VLR(5V) and VREF(5V).

VD : Main power source. Generated in the expansion board.

5VA : Power source for IC101, IC201 and the Pick-up Unit. Generated by the regulator IC (IC701) from VD.

5VLR : Audio midpoint voltage. Generated by the regulator IC (IC604) from VD.

VREF : Power source for Linear Position Sensor. A/D reference voltage of the microcomputer. Usually taken from the microcomputer's VDD line via on enabling switch.

4.2 MECHANISM OPERATION

1) Elevation Operation

The microcomputer determines the present elevation position from the voltage value (EPVO) obtained from the potential divider VR801.

The voltage of the position of the requested disk is calculated from figure 16 and the ELV Motor is controlled so that the EPVO voltage is matched to the value obtained from the calculation.

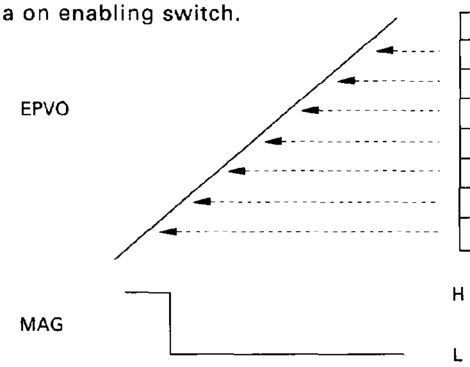

	min	typ.	max
DISC1 Voltage position	EREF+115LSB	EREF+117LSB	EREF+119LSB
DISC2 Voltage position	EREF+ 76LSB	EREF+ 78LSB	EREF+ 80LSB
DISC3 Voltage position	EREF+ 37LSB	EREF+ 39LSB	EREF+ 41LSB
DISC4 Voltage position	EREF- 2LSB	EREF	EREF+ 2LSB
DISC5 Voltage position	EREF- 41LSB	EREF- 39LSB	EREF- 37LSB
DISC6 Voltage position	EREF- 80LSB	EREF- 78LSB	EREF- 76LSB
EJECT Voltage position			EREF-106LSB

*1LSB = approx 20mV (5/256 V)

Fig.16

2) Tray Extension and Retraction

The microcomputer detects tray retraction, tray extension and clamp completion by the MSW signal waveform (voltage) created by potential division of the voltage DSP Switch and the voltage TRP Switch and controls the Tray Motor.

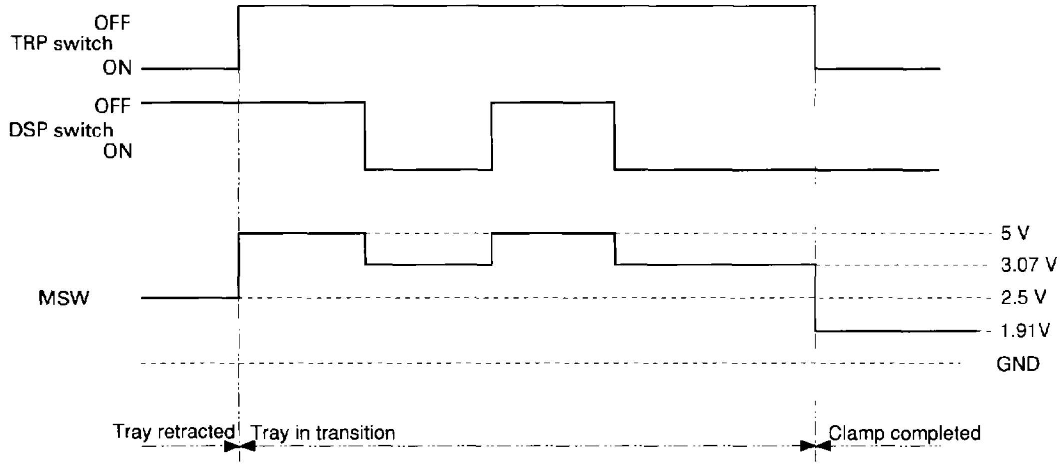

Fig.17

3) 0.6mm UP/DOWN Operation

In order to secure clearance with the neighboring disk the Stage Mechanism is driven down by the ELV Motor (M852) when clamping is complete. The microcomputer detects the completion of clamping, and when the Tray Motor is brought to a full stop, the ELV Motor (M852) is forcibly driven for a 240 ms interval in the downward direction.
When the tray is being retracted, the ELV Motor (M852) is controlled to match the value of EPVO calculated during the elevation operation. The tray retraction operation is started when the Tray has been moved to the prescribed position.

Each motor is driven by the driver IC302(LB1836M). LB1836M is an IC which usually operates through the combination of H and L of the 4 lines I1, I2, I3 and I4. With this system, I1=I3 and control is realized through a combination of H and L of the 3 lines I1, I2 and I4.

ELV Motor	Tray Motor	I1, 3	I2	I4
Forward	Brake	H	H	L
Reverse	Stand-by	L	L	H
Brake	Forward	H	L	H
Stand-by	Reverse	L	H	L
Brake	Brake	H	H	H
Stand-by	Stand-by	L	L	L

* ELV Motor Forward : ELV-up (Disc No. Down)
Tray Motor Forward : Tray Ejection

4) Disc Detection

The MSW signal is not only used for the timing of the disk extension and retraction motion but also for determinating the existence and non-existence of a disk and the disk type (8cm or 12cm). The disk detection operations are carried out while the Tray is being pulled out of the magazine. Disk detection is determined when the light passes through (DISC waveform L:less than 1.5V) or is interrupted (DISC waveform H:1.5V or above) with an array of LEDs and photo transistors above and below the Tray.

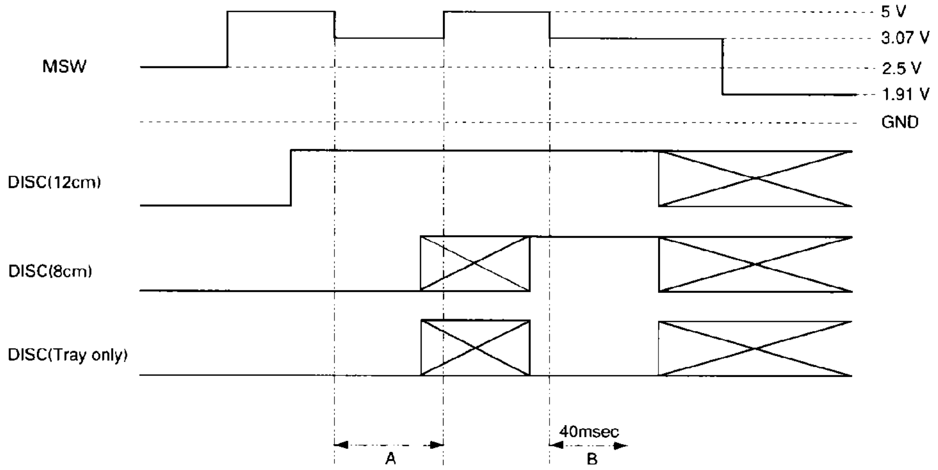

Fig.18

The DISC waveform is continuously monitored within the intervals A and B above and if a L is detected even once, that interval is determined as L. If a L is not detected at all then that interval is determined as H in the following.

	A	B
12cm	H	H
8cm	L	H
No Disk	—	L

4.3 PRE-AMP SECTION (UPC2572GS: IC101)

This section processes the pickup output signals to create the signals for the servo, demodulator & control.

The pickup output signals are I-V converted by the pre-amp with built in photo-detector in the pickup, and added by the RF amp (IC101) to obtain the RF, FE, TE, TE zero cross, and other signals.

The main component is the UPC2572GS and each section is explained below. Because this system has a single power supply (+5V), the reference voltage for this IC, the PU and the servo circuit is the voltage REFO (+2.5V). The REFO signal is obtained by buffering REFOUT from the servo LSI (IC201: UPD63702GF) and is available from Pin 19 of IC101. All measurements should be done using this REFO as reference.

Note: During measurement, do not short REFO and GND.

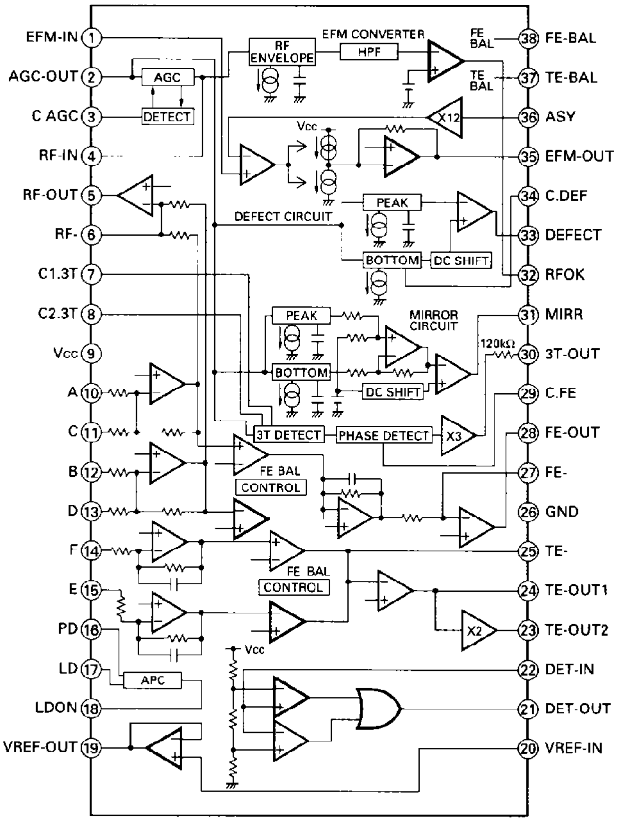

Fig.19 : UPC2572GS BLOCK DIAGRAM

1) APC Circuit (Automatic Power Control)

When the laser diode is driven with constant current, the optical output has large negative temperature characteristics. So the current must be controlled to hold the output constant with the monitor diode. The circuit that carries out this function is the APC circuit. The LD current is obtained by measuring the voltage between LD1 and ground and the value of this current is about 35mA.

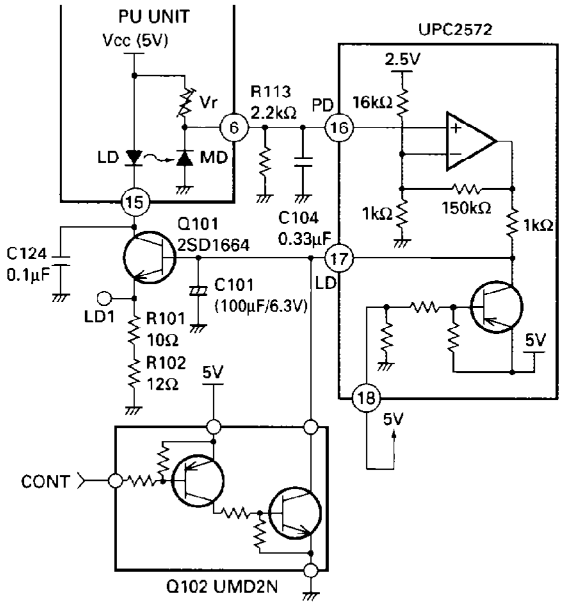

Fig.20 : APC CIRCUIT

2) RF Amp, RF AGC Amp

The photo-detector outputs (A+C) and (B+D) are added, amplified, and equalized in IC101 and output to the RFI pin. (The eye pattern can be checked at this pin.)

The RFI voltage low-frequency component is:

RFI = (A+B+C+D) x 3.22

R111 is the offset resistor for holding the RFI signal in the pre-amp's output range. The RFI signal is AC coupled and input to Pin 4 (RFIN pin).

This IC contains an RF AGC circuit, which holds the RFO output at Pin 2 at a fixed level (1.2 ± 0.2Vp-p). This RFO signal is used in the EFM, DFCT, and MIRR circuits.

3) EFM Circuit

This circuit, "squares" up the analog RF signal into a digital EFM signal. In order to ensure minimum errors it is necessary to use a feedback circuit to match the DC level of the threshold to the center of the RF waveform.

This circuit uses the fact that the EFM signal should have no DC component. By feeding back the EFM signal's DC level the threshold level changes until the DC level is zero and the threshold, by definition, is at the exact center of the RFO waveform. The filtering in the feedback has been adjusted to ensure minimum error. The EFM signal is output from Pin 35. The signal is a 2.5Vp-p amplitude signal centering on REFO.

4) DFCT (Defect) Circuit

The DFCT circuit detects defects on the disc surface, and outputs a "H" signal from Pin 33.

If there is dirt on the disc, drop outs may appear. The DFCT signal output is input to the servo LSI HOLD pin and the focus and tracking servo drives are held while the DFCT output is "H" in order to improve playability.

5) RFOK Circuit

This circuit produces the signal indicating the focus close state during play and the timing for closing the focus servo. This signal is output from Pin 32. This RFOK signal output is input to the servo LSI RFOK pin and the focus close command is issued by the servo LSI. This signal is high during play when the focus is closed.

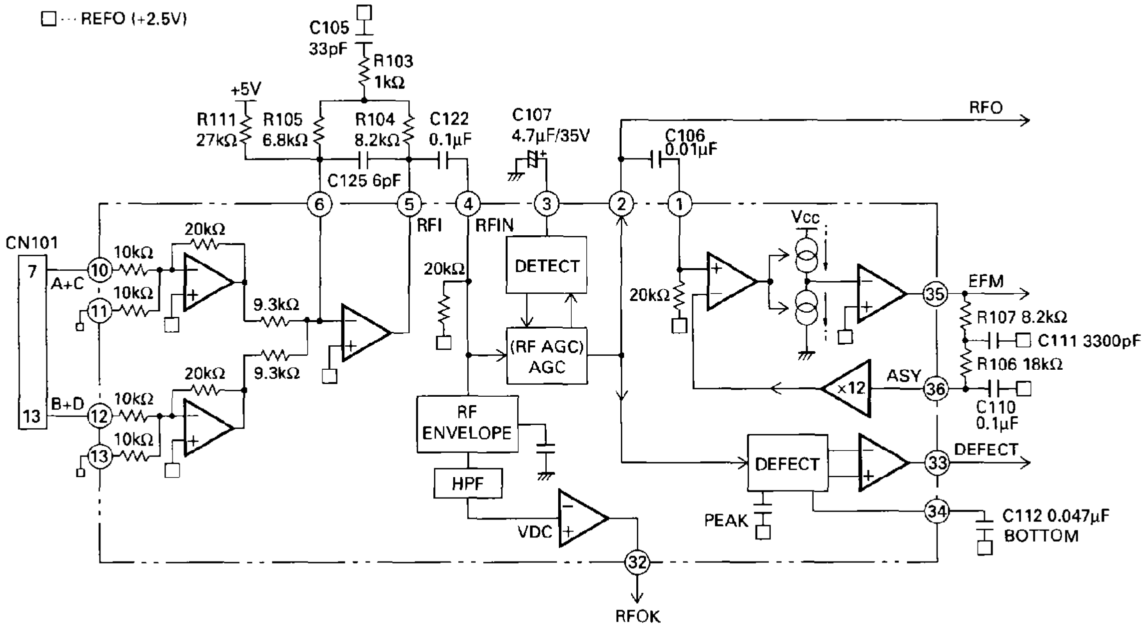

Fig.21 : RF AMP, RF AGC, EFM, DFCT, RFOK CIRCUIT

6) Focus Error Amp

The photo-detector outputs (A+C) and (B+D) are passed through a differential amp, and an error amp and (A+C-B-D) is output from Pin 28 as the FE signal. The FEY voltage low-frequency component is:

$$\text{FEY} = (\text{A+C-B-D}) \times \frac{20\text{k}}{10\text{k}} \times \frac{90\text{k}}{68.8\text{k}} \times \frac{\text{R108}}{17.2\text{k}}$$

: (PU FE level × 5.02)

An S curve of about 1.6Vp-p is obtained with REFO as the reference. The final-stage amp cutoff frequency is 12.4kHz.

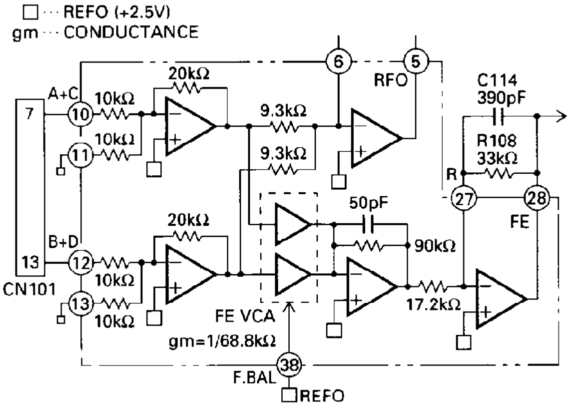

Fig.22 : FOCUS ERROR AMPLIFIER

7) Tracking Error Amp

The photo-detector E and F outputs are passed through a differential amp and an error amp and (E-F) is output from Pin 24 as the TE signal.

The TEY voltage low-frequency component is:

$$\text{TEY} = (\text{E-F}) \times \frac{63\text{k}}{(31\text{k} \ +16\text{k}\ )} \times \frac{\text{R109}}{17\text{k}}$$

: (PU TE output level × 5.36)

The TE waveform of about 1.5Vp-p with REFO as the reference is obtained as the TE output (Pin 24). The final-stage amp cutoff frequency is 19.5kHz.

8) Tracking Zero Crossing Amp

The tracking zero crossing signal (below, TEC signal) is the TE waveform (Pin 24 voltage) amplified four times and is used to find the zero crossing points of the tracking error with the UPD63702GF servo LSI. This zero crossing point is found for the following two reasons.

(1) To count tracks for carriage moves and track jumps

(2) To detect the direction in which the lens is moving for tracking closing (This is used in the tracking brake circuit, described Page 20 b).)

The TEC signal frequency range is 500Hz - 19.5kHz.

TEC voltage = TE level × 4

In other words, the TEC signal level is calculated at 6Vp-p. This level exceeds the op-amp's output range and the signal is clipped, but this can be ignored because this signal is used by the servo LSI only at the zero crossing point.

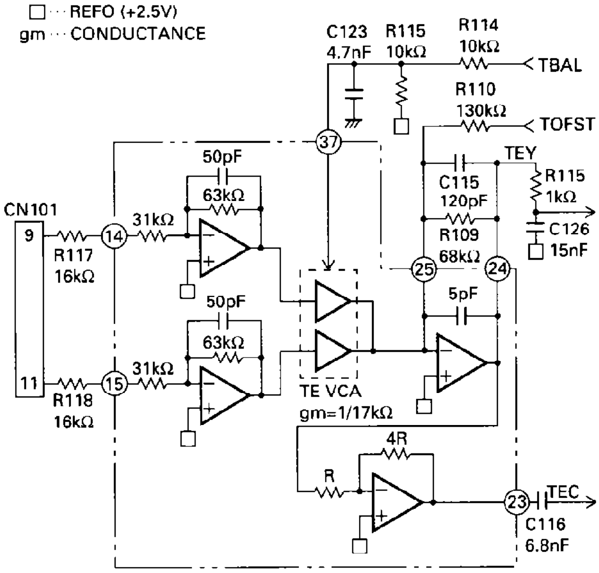

Fig.23 : TRACKING ERROR AMPLIFIER & TRACKING ZERO CROSSING AMPLIFIER

9) MIRR (Mirror) Circuit

The MIRR signal shows the on track and off track data and is output from Pin 31.

When the laser beam is

On track: MIRR = "L"

Off track: MIRR ≐ "H"

This signal is used in the brake circuit, described Page 20.

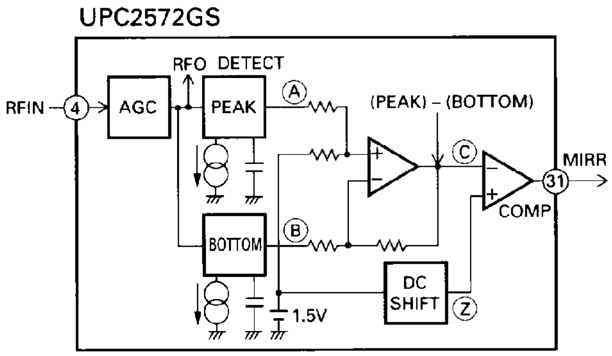

Fig.24 : MIRR CIRCUIT

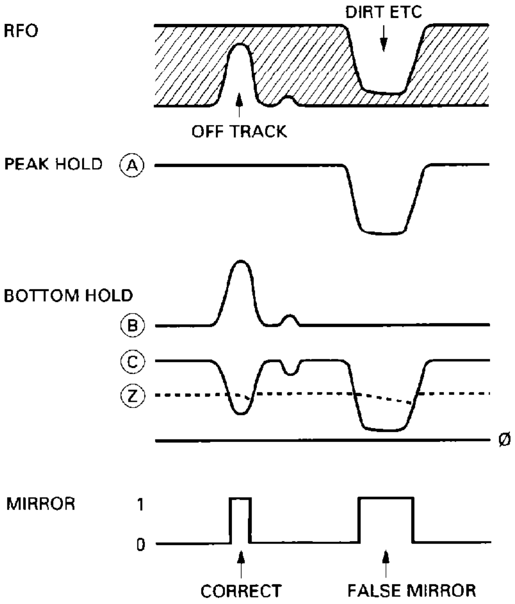

Fig.25 : MIRR CIRCUIT & SIGNAL DIAGRAM

10) 3TOUT Circuit

This circuit detects variations of the RF signal when an external interference is input into the focus servo loop and outputs the phase difference between the FE signal and the RF level variation signal from Pin 30. The signal has been passed through a low-pass filter (fc = 40Hz). This signal is used for the FE bias automatic adjustment, described Page 23.

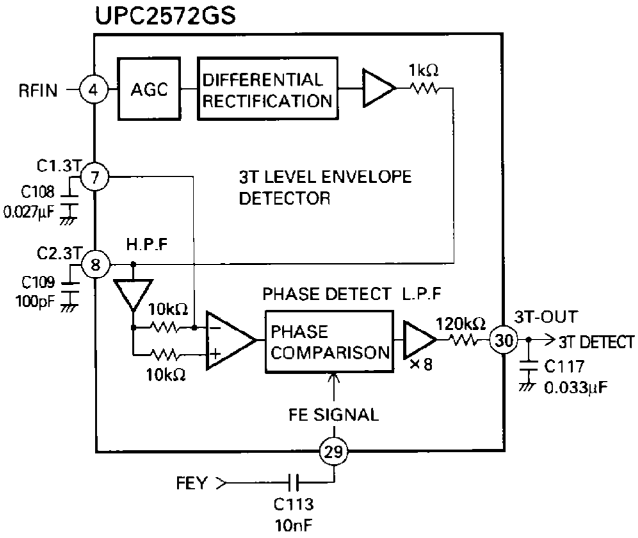

Fig.26 : 3T OUT CIRCUIT

4.4 SERVO SECTION (UPD63702GF: IC201)

This section can be divided into two parts.
One is the servo processing section, which handles such servo controls as error signal equalizing, in focus, track jump, and carriage move. The other is the signal processing section, which handles data decoding, error correction, and interpolation processing.
This IC converts the FE and TE signals from analog to digital and outputs the focus, tracking, and carriage drive signals via the servo block. Also, the EFM signal from the pre-amp is decoded in the signal processing section and finally output as audio signals after D/A conversion. (This IC has a built in audio digital-analog converter.) The decoding process also creates the spindle servo error signals, which is fed to the spindle servo block to create the spindle drive signal.
The focus, tracking, carriage, and spindle drive signals are then amplified by IC301, XLA6997FM and fed to their respective actuators and motors.

1) Focus Servo System

The main focus servo equalizer is in the UPD63702GF. Figure 27 is the focus servo block diagram.
In the focus servo system, the lens must be brought within the in-focus range for focus closing. Therefore, the lens is raised and lowered according to the triangular focus search voltage to find the focus point. During this time the spindle motor is kicked and kept rotating at a set speed.
The servo LSI monitors the FE signal and the RFOK signal and automatically carries out the focus close operation at the appropriate point.
Focus closing is carried out when the following four conditions are all met.

(1) The lens is moving from far to near toward the disc surface.
(2) RFOK = H
(3) The FZD signal (within the IC) is latched at high.
(4) FE = 0 (REFO reference)

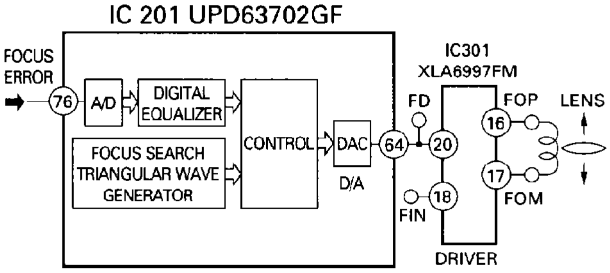

Fig.27 : FOCUS SERVO BLOCK DIAGRAM

When the above conditions are all met and the focus is closed, the XSO signal is shifted from high to low, then 40ms later, the microcomputer begins to monitor the RFOK signal that is passed through the low pass filter.

When the RFOK signal is judged to be low, the microcomputer carries out various actions such as protection.

Figure 28 shows the series of operations for focus closing (for the case where focus cannot be closed.) Also, in focus-mode-selection during test mode when the display is 01, if the focus close button is pressed, the S curve, search voltage, and actual lens movements can be checked.

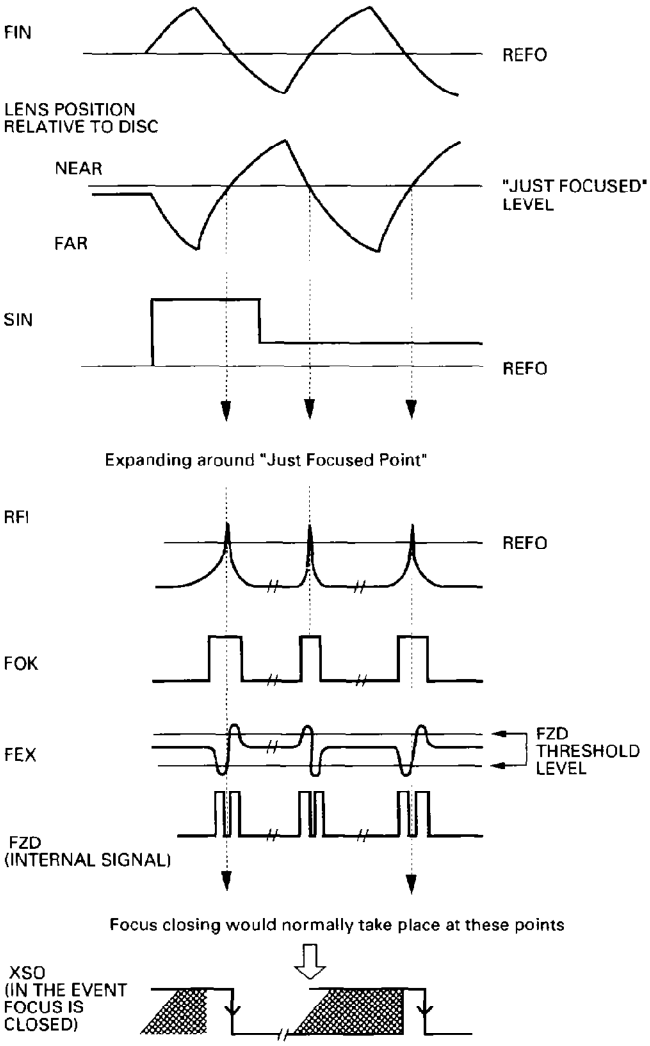

Fig.28: FOCUS CLOSING SEQUENCE

2) Tracking Servo System

The main tracking servo equalizer is in the UPD63702GF. Figure 29 is the tracking servo block diagram.

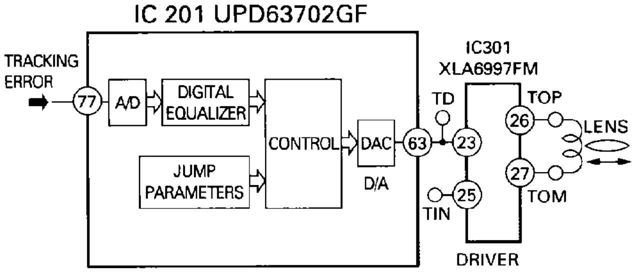

Fig.29 : TRACKING SERVO BLOCK DIAGRAM

a) Track Jump

When the LSI receives the track jump command from the microcomputer, the track jump is carried out automatically by the auto sequence function within the LSI. This system has six types of track jumps used for searches: 1, 4, 10, 32, 32 × 2, and 32 × 3. In test mode, in addition to these jumps, CRG moves can be executed and checked by mode selection. For track jumps, the microcomputer sets half of the total number of jumps (2 tracks for a 4 track jump) and counts the set number of tracks using the TEC signals. From the point when it has counted the set number of tracks, it outputs the brake pulse for a fixed period of time (set by the microcomputer) to stop the lens. In this way, it can close the tracking and continue normal play.

To improve the servo loop re-closing performance just after track jump, the brake circuit comes on for 60ms after the end of the brake pulse and the tracking servo gain is increased.

Fast forward and reverse operations in normal mode are realized by executing consecutive single track jumps. The speed is about 10 times as high as in normal play.

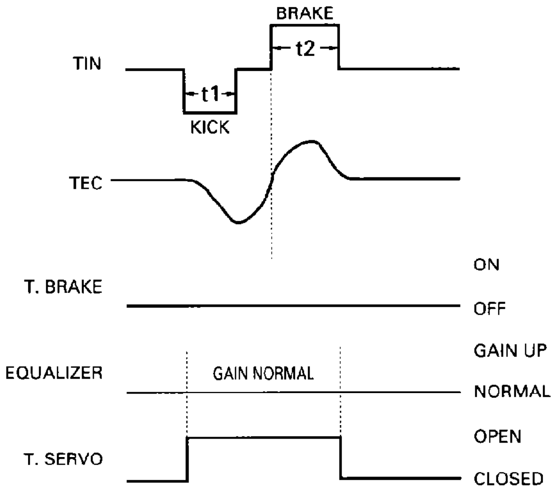

Fig.30 : SINGLE TRACK JUMP

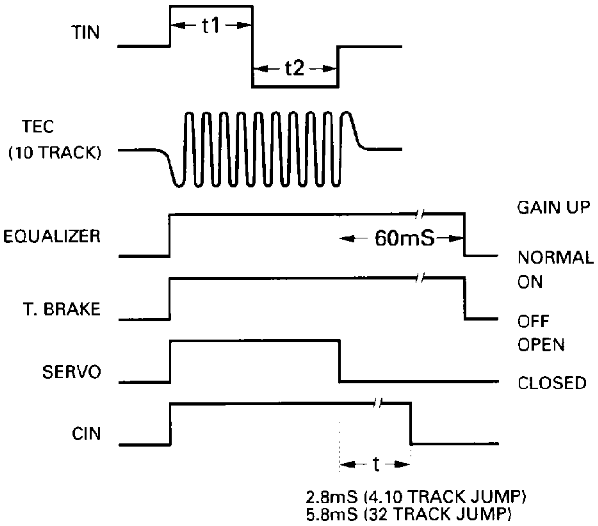

Fig.31 : MULTI-TRACK JUMP

b) Brake Circuit

This relies on determining which direction the lens is moving and only outputting the portion of the drive waveform which acts to oppose this motion. Direction of motion is deduced from TEC and the MIRR signal and knowledge of their phase relation.

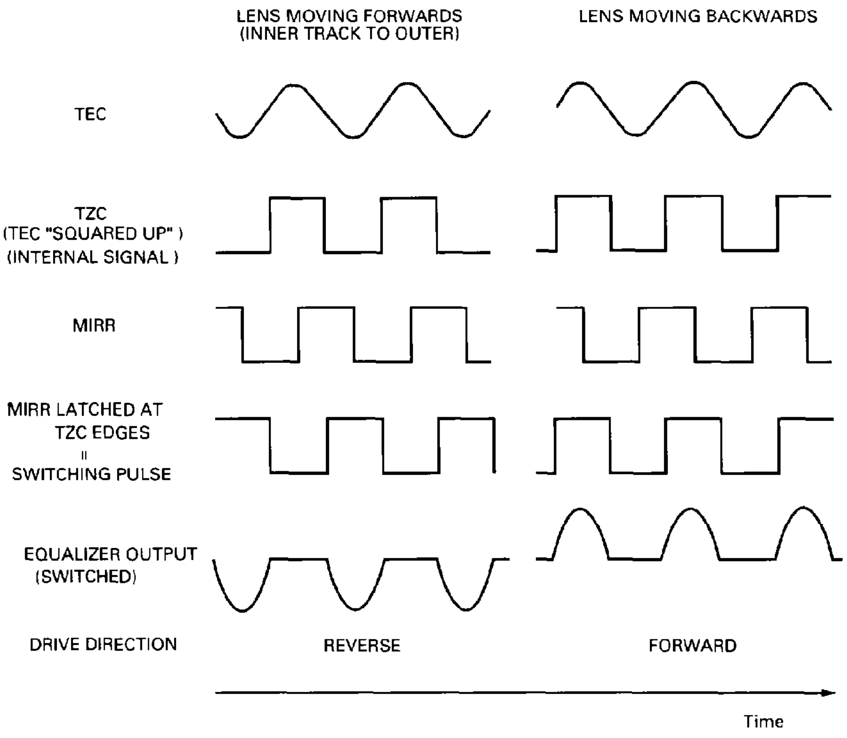

Note: Equalizer output assumed to hava same phase as TEC.

Fig.32 : TRACKING BRAKE CIRCUIT

3) Carriage Servo System

The carriage servo supplies the tracking equalizer's low-frequency component (lens position information) output to the carriage equalizer and after applying a fixed amount of gain, outputs the drive signal from the servo LSI. This signal is applied to the carriage motor through the driver IC.

When the lens offset reaches a certain level during play, the entire PU must be moved in the forward direction. Therefore, the equalizer gain is adjusted to output a voltage higher than the carriage motor starting voltage. In actual operations, a certain threshold level is set for the equalizer output within the servo LSI and the drive voltage is output from the servo LSI only when the equalizer output level exceeds that threshold level. This reduces power consumption. Also, due to disc eccentricity and other factors, the equalizer output voltage may cross the threshold level a number of times before the entire PU starts to move. In this case, the drive voltage waveform, (which is applied) from the LSI, becomes pulsative.

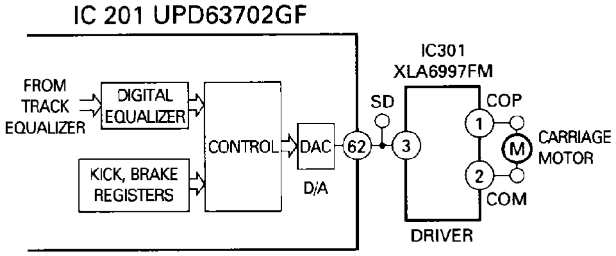

Fig.33 : CARRIAGE SERVO CIRCUIT

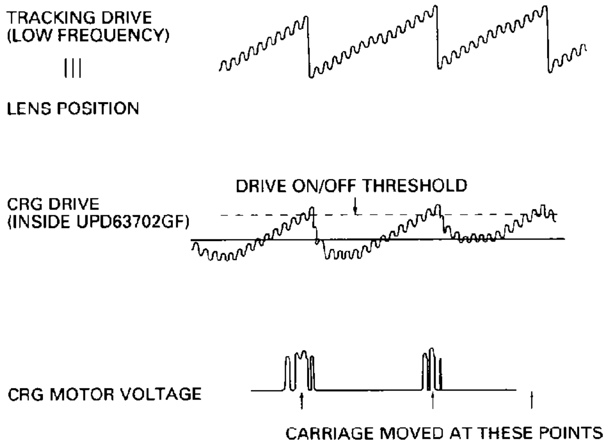

Fig.34 : CARRIAGE WAVEFORM

4) Spindle Servo System

The spindle servo has the following modes.

(1) Kick: The mode used for disc rotation acceleration during setup

(2) Offset:

a) Used during setup from the end of kick until the AGC end

b) Used during play when the focus is unlocked until it is recovered

Both of these are for holding the disc rotation rate near the normal rotation rate.

(3) Adaptive servo: CLV servo mode for normal operation

In the EFM demodulation block, the frame sync signal and internal frame counter output signal are sampled each WFCK/16 and a signal is produced indicating whether or not they match. Only after this signal is in non-match mode eight consecutive times, is the system treated as out of sync, at other times it is treated as in sync. In this adaptive servo mode, a servo mode for pulling the system into sync is automatically selected when the system is out of sync and the regular servo is automatically selected when the system is in sync.

(4) Brake: The mode for stopping the spindle motor rotation

The brake voltage is output by the microcomputer from the servo LSI. At this time, the EFM wave form is monitored within the LSI and if the longest EFM pattern exceeds a certain interval (when the rotation is slow enough), a flag is registered within the LSI and the microcomputer switches the brake voltage off. If the flag is not registered within a certain period of time, the microcomputer switches from brake mode to stop mode which lasts for a fixed period of time. In this case, ejection of the disc can only occur after this period of time.

(5) Stop: The mode used during power on and ejection

At this time, the voltage across the spindle motor is 0V.

(6) Rough servo: The mode used for carriage feed (carriage move during a long search)

The linear speed is calculated from the EFM wave form and a high level or low level is input to the spindle equalizer. In test mode, this mode is also used for the grating check.

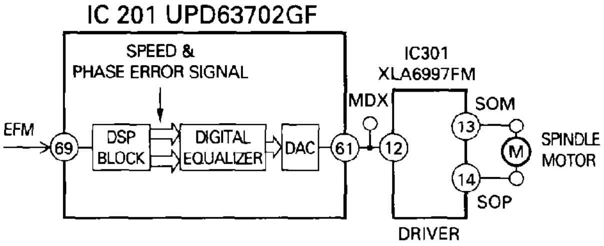

Fig.35 : SPINDLE SERVO BLOCK DIAGRAM

4.5 AUTOMATIC ADJUSTMENT FUNCTIONS

This system uses a pre-amp (UPD2572GS) and servo LSI (UPD63702GF) to automate all circuit adjustment. All adjustments are carried out automatically each time a disc is inserted or the CD mode is selected with the source key. Here is how each automatic adjustment works.

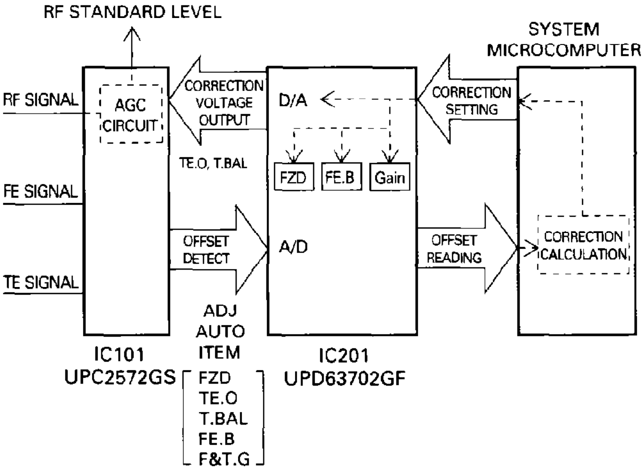

Fig.36 : AUTOMATIC GAIN CONTROL

1) FZD Cancel Setting

This setting is to make the focus closing reliable. When the power is switched on, the FE offset level is read and a voltage opposite to this offset value is written to the CRAM in the IC to cancel the offset. In this way, the FZD threshold level can be set to a constant value (+150mV) and one of the conditions within the IC for focus closing "that the FZD signal is latched at high" can be fulfilled reliably.

2) TE Offset Automatic Adjustment

This function adjusts the pre-amp TE amp offset to 0 V when the power is switched on.

The adjustment procedure is:

(1) The TE offset (LD off) is read by the microcomputer via the servo LSI (offset = TE1).

(2) The microcomputer calculates the voltage to be corrected from the value of TE1 and sets the output of Pin 65 of the servo LSI (signal name: TOFST). The concrete calculation method is as follows.

$TOFST2 = TOFST1 + TE1 \times R110/R109$

3) Tracking Balance Automatic Adjustment

This adjustment equalizes the difference in sensitivity of the E channel and F channel of the TE output. In actual practice, the TE waveform is adjusted to be vertically symmetrical about REFO.

The adjustment procedure is:

(1) After focus closing, the lens is kicked in the radial direction to reliably generate the TE waveform.

(2) At this time, the microcomputer reads the peak and bottom of the TE waveform through the servo LSI.

(3) The microcomputer calculates the value of the offset and the correction voltage to output from Pin 66 of the servo LSI (signal name: TBAL).

(4) The voltage output from the servo LSI is input to Pin 37 of the pre-amp (IC101: UPC2572). This pin is the TEVCA amp control voltage pin. The gain for the E channel and F channel within the pre-amp is varied according to the input voltage to adjust the tracking balance and make the TE waveform vertically symmetrical about REFO.

4) FE Bias Automatic Adjustment

This adjustment is made to maximize the RFI level during play by optimizing the focus point. This adjustment utilizes the phase difference between the RF waveform 3T level signal and the focus error signal. Since an external interference is input into the focus loop, this adjustment uses the same timing as the auto gain control, explained below.

The adjustment procedure is:

(1) External interference is injected into the focus loop by command from the microcomputer (within the servo LSI).

(2) The RF signal 3T component level variation is detected within the pre-amp.

(3) The phase difference between the FE signal due to external interference input and the above 3T component is detected, to sense the focus deviation direction, and the result is output as a DC voltage from Pin 30 (3T-OUT) of the pre-amp.

(4) The 3T-OUT voltage is input to Pin 75 (A/D port) of the servo LSI and the microcomputer reads the 3T-OUT voltage through the servo LSI.

(5) The microcomputer calculates the required correction and adjusts the focus loop offset in the servo LSI.

In the same manner as the auto gain control, this adjustment is repeated a number of times to raise the adjustment precision.

5) Auto Gain Control (AGC)

This adjustment has already been used in the previous generation of CD modules. This function automatically adjusts the focus and tracking servo loop gain.

The adjustment procedure is:

(1) External interference is injected into the servo loop.

(2) The error signals (FE, TE) when the external interference is injected are passed through a band pass filter and the G1 and G2 signals are obtained.

(3) The microcomputer reads the G1 and G2 signals through the servo LSI.

(4) The microcomputer calculates the required correction and adjusts the loop gain within the servo LSI.

To raise the adjustment precision, the same adjustment procedure is repeated a number of times.

6) Initial Adjustment Values

All the automatic adjustments use the previous adjustment value as the initial value as long as the microcomputer power supply is not cut off (the backup is not cut off). If the backup is cut off, automatic adjustment does not start from the previous adjustment value, but rather from the default setting.

7) The Coefficient Display for Adjustment Result

The results of all automatic adjustments can be displayed and checked in test mode.

The coefficient displays for each automatic adjustment are as follows.

(1) FZD cancel, TE.OFST cancel, T.BAL, FE.bias

Reference value = 32 (A coefficient of 32 indicates that no adjustment was necessary).

The display is in units of about 40mV.

Example: FZD cancel coefficient = 35

35-32 = 3   3 × 40mV = 120mV

Since the corrected value is approximately + 120mV, the FE offset before adjustment was - 120mV.

(2) Focus and tracking gain adjustment

Reference value: Focus = 13, tracking = 20

The coefficient display shows the gain derease relative to the reference value.

Example: AGC coefficient = 40

Gain = 20log (20/40) = - 6dB