PIONEER
The Art of Entertainment

Service Manual

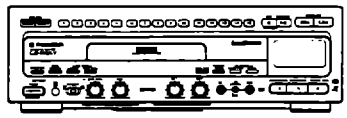

SERVICE GUIDE

ORDER NO.
RRV1519

CD/VIDEO CD/LD PLAYER

CLD-3750KV
CLD-1750KV

CONTENTS

1. SPECIFICATION OF VIDEO CD 2
2. VIDEO CD FORMAT 3
3. PBC OPERATION 7
4. SPECIAL PLAYBACK 8
5. VCDB ASSY/THE METHODS OF REPAIR 9

PIONEER ELECTRONIC CORPORATION 4-1, Meguro 1-Chome, Meguro-ku, Tokyo 153, Japan
PIONEER ELECTRONICS SERVICE, INC. P.O.Box 1760, Long Beach, CA 90801-1760, U.S.A.
PIONEER ELECTRONIC [EUROPE] N.V. Haven 1087, Keetberglaan 1, 9120 Melsele, Belgium
PIONEER ELECTRONICS ASIACENTRE PTE. LTD. 501 Orchard Road, #10-00 Lane Crawford Place, Singapore 0923

© PIONEER ELECTRONIC CORPORATION 1996

T-FZM JUNE 1996 Printed in Japan

1. SPECIFICATION OF VIDEO CD

1.1 VIDEO CD

- A maximum of 74 minutes of moving pictures with audio are recorded in a 12 cm (5inch) disc by using the compression technology of the international standard MPEG. (Audio is also compressed by MPEG.)

- Pictures using MPEG have no red stripes or noise causing skipped color. However, block distortion and so-called mosquito noise exist in the pictures.

Picture quality of Video CD

Since the units of screen compression are macro blocks and blocks, error will be generated in units of blocks if the screen as a whole moves. Thus, distortion may be generated on the borderline between blocks, resulting in a screen blurred with mosaics. This is called "block noise."
Error during compression may generate noise, that looks like a blur in a position with high frequency in the screen (edges of characters, etc.), or mosquito noise.

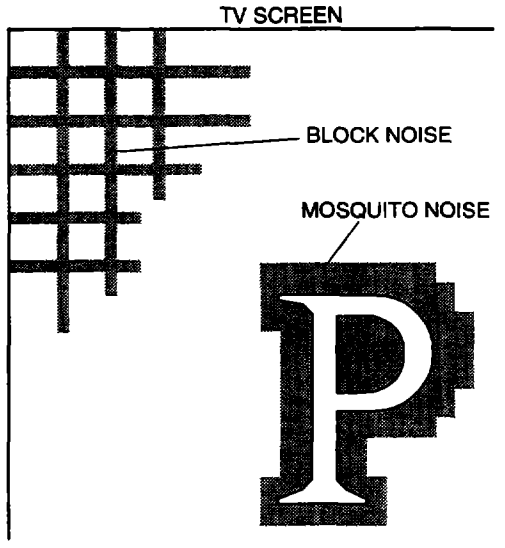

Fig. 1-1

These noises are generated during encoding. Therefore, they cannot be reduced or eliminated at the decoding side (player).

- The track pitch and the bit length of Video CDs are equivalent to those in normal CDs (CD-DA). The file structure complies with the ISO 9660. Thus, Video CDs belong to CD-ROM XA. (Therefore, Video CDs can be played back with personal computers if the MPEG board is used.)
Besides 12 cm (5inch) discs, there are 8 cm (3inch) discs. Also, CD-DA can be recorded on the external perimeter of the MPEG track. In addition, subcodes (graphics) can be recorded. However, the CLD-3750KV and CLD-1750KV are not designed to use subcodes of the MPEG track.

- Moving pictures of MPEG are recorded after Track 2. At least a single track must be used. With the CLD-3750KV and CLD-1750KV, the system displays a value deducting 1 from the actual track number of Video CD played back for searching or display. Although other companies are using similar methods, these methods are not established as a rule. Therefore, some discs may indicate actual track numbers on their labels.

1.2 BASIC KNOWLEDGE OF VIDEO CD

Category of Video CD

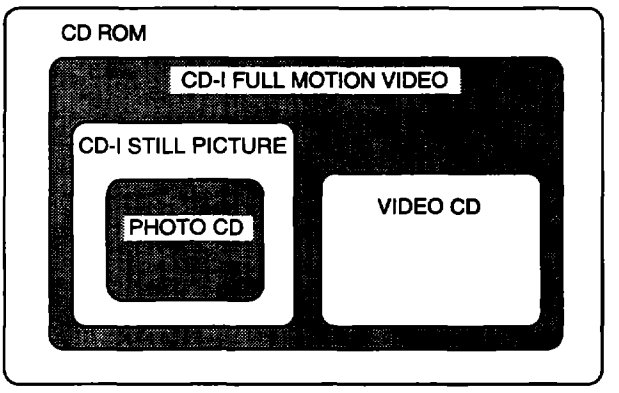

Fig. 1-2

1.3 SPECIFICATIONS OF VIDEO CD

Physical format	CD-ROM (XA)
Digital video	Complies with MPEG1. Picture size/Picture rate 352X240/29.97Hz (NTSC) 352X240/23.975Hz (FILM) 352X288/25Hz (PAL) Transmission rate: max. 1.152 MBPS
Digital audio	Complies with MPEG1 Layer II. Sampling frequency : 44.1kHz Bit rate : 224kBPS
Playback time	Max. 74 minutes
Pixels of still picture	Standard level: 352X240 High definition level: 704X480
Playback specification	Normal playback and Menu playback using PBC
Video signal output	NTSC/PAL

Fig. 1-3

2. VIDEO CD FORMAT

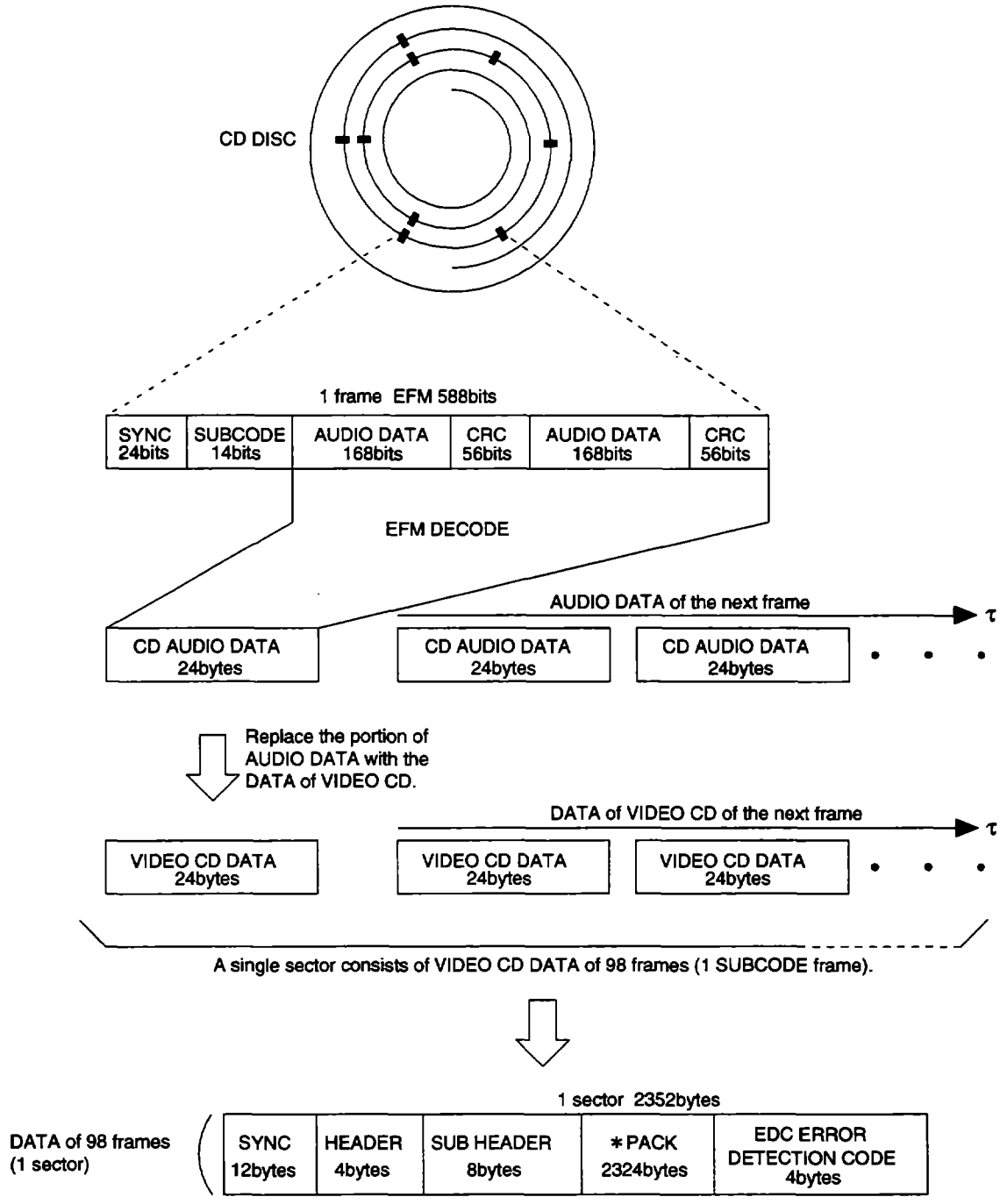

Fig. 2-1

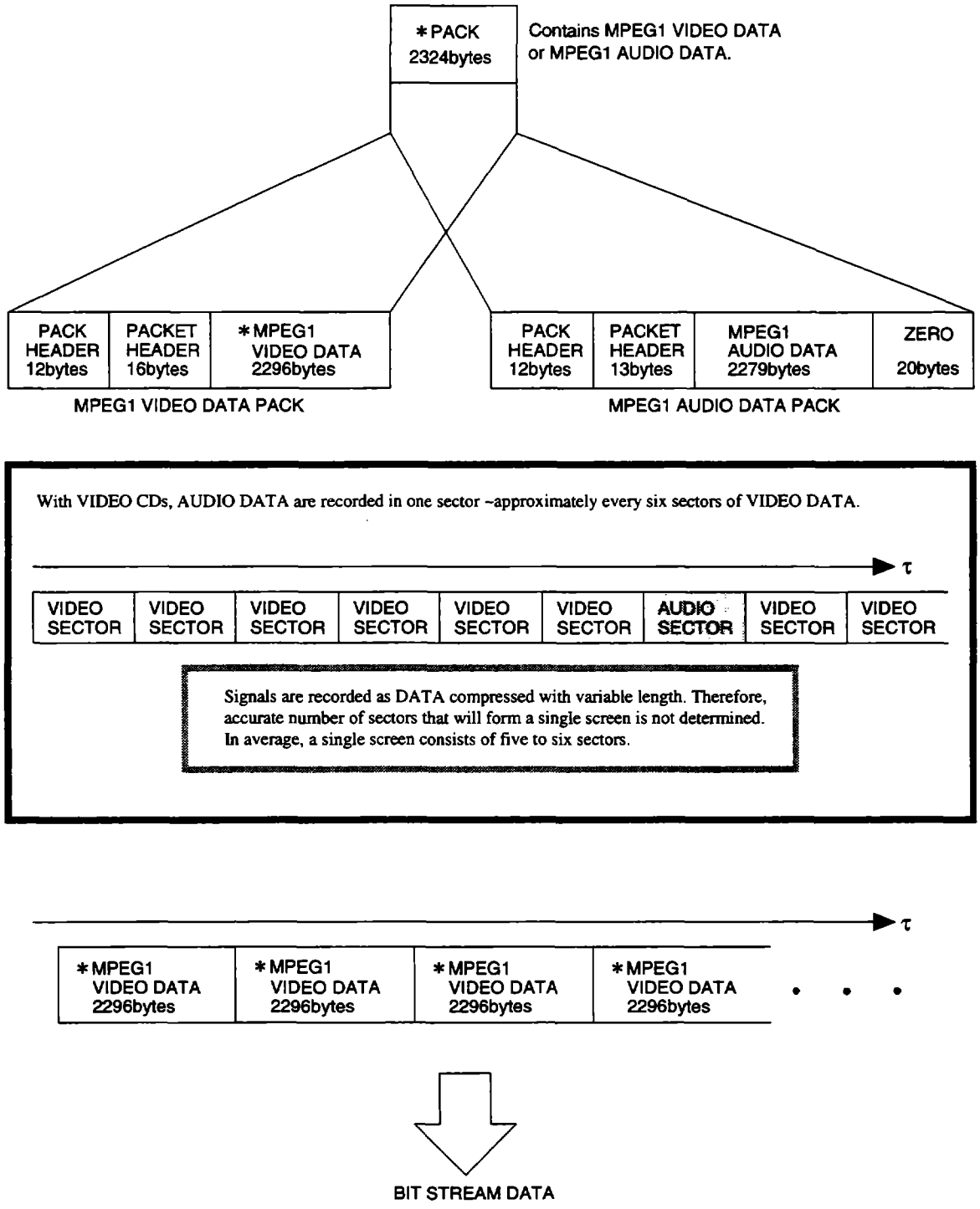
*PACK
2324bytes
Contains MPEG1 VIDEO DATA
or MPEG1 AUDIO DATA.
PACK HEADER 12bytes
PACKET HEADER 16bytes
*MPEG1 VIDEO DATA 2296bytes
MPEG1 VIDEO DATA PACK
PACK HEADER 12bytes
PACKET HEADER 13bytes
MPEG1 AUDIO DATA 2279bytes
ZERO 20bytes
MPEG1 AUDIO DATA PACK
With VIDEO CDs, AUDIO DATA are recorded in one sector -approximately every six sectors of VIDEO DATA.
τ
VIDEO SECTOR
VIDEO SECTOR
VIDEO SECTOR
VIDEO SECTOR
VIDEO SECTOR
VIDEO SECTOR
AUDIO SECTOR
VIDEO SECTOR
VIDEO SECTOR
Signals are recorded as DATA compressed with variable length. Therefore, accurate number of sectors that will form a single screen is not determined. In average, a single screen consists of five to six sectors.
τ
*MPEG1 VIDEO DATA 2296bytes
*MPEG1 VIDEO DATA 2296bytes
*MPEG1 VIDEO DATA 2296bytes
*MPEG1 VIDEO DATA 2296bytes
BIT STREAM DATA

Fig. 2-2

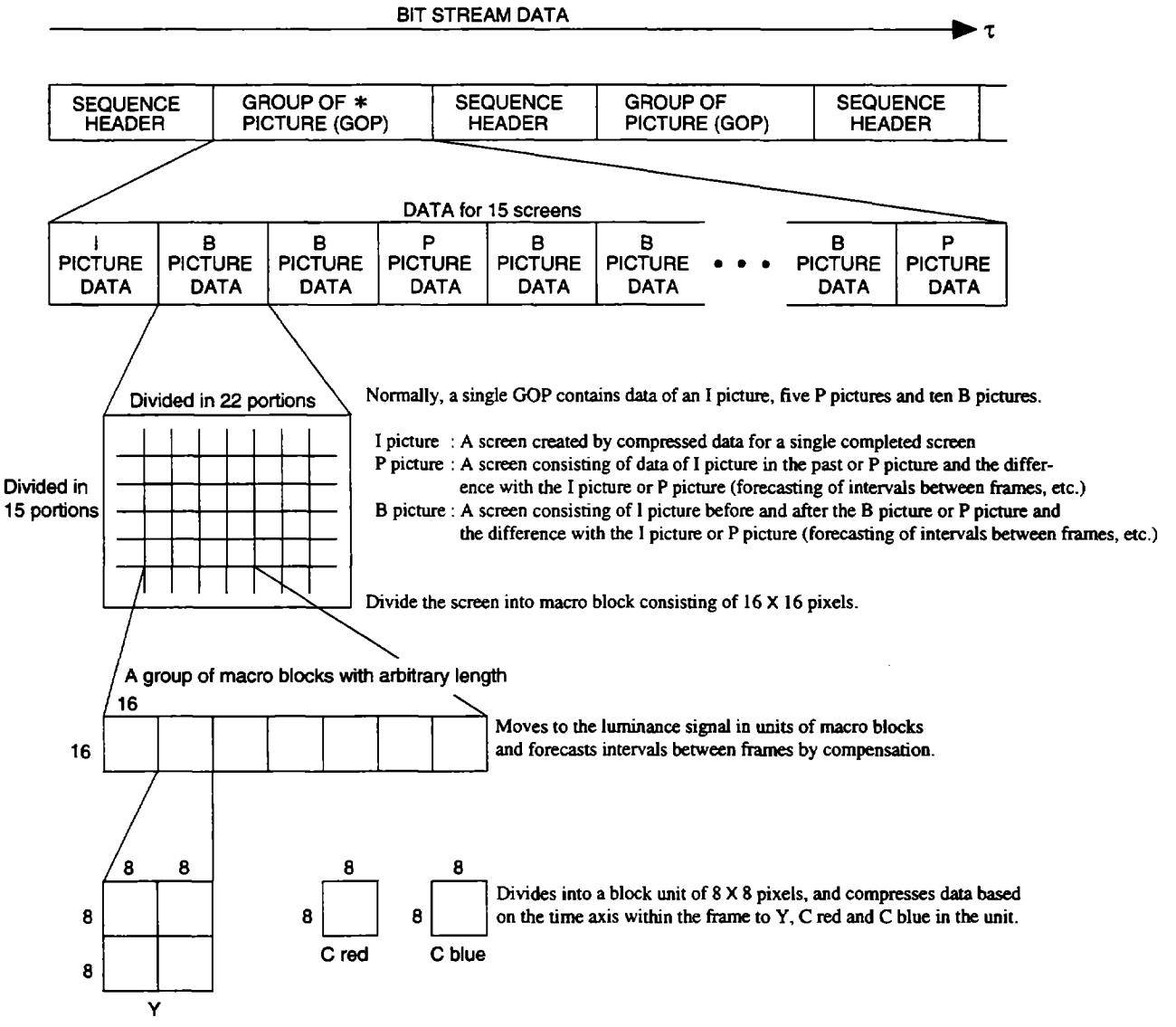
BIT STREAM DATA
τ
SEQUENCE HEADER
GROUP OF * PICTURE (GOP)
SEQUENCE HEADER
GROUP OF PICTURE (GOP)
SEQUENCE HEADER
DATA for 15 screens
I PICTURE DATA
B PICTURE DATA
B PICTURE DATA
P PICTURE DATA
B PICTURE DATA
B PICTURE DATA
B PICTURE DATA
P PICTURE DATA
Divided in 22 portions
Divided in 15 portions
Normally, a single GOP contains data of an I picture, five P pictures and ten B pictures.
I picture : A screen created by compressed data for a single completed screen
P picture : A screen consisting of data of I picture in the past or P picture and the difference with the I picture or P picture (forecasting of intervals between frames, etc.)
B picture : A screen consisting of I picture before and after the B picture or P picture and the difference with the I picture or P picture (forecasting of intervals between frames, etc.)
Divide the screen into macro block consisting of 16 X 16 pixels.
A group of macro blocks with arbitrary length
16
16
Moves to the luminance signal in units of macro blocks and forecasts intervals between frames by compensation.
8
8
8
8
8
8
8
8
C red
C blue
Y
Divides into a block unit of 8 X 8 pixels, and compresses data based on the time axis within the frame to Y, C red and C blue in the unit.

Fig. 2-3

VIDEO CD VERSION 2.0 TRACK FORMAT

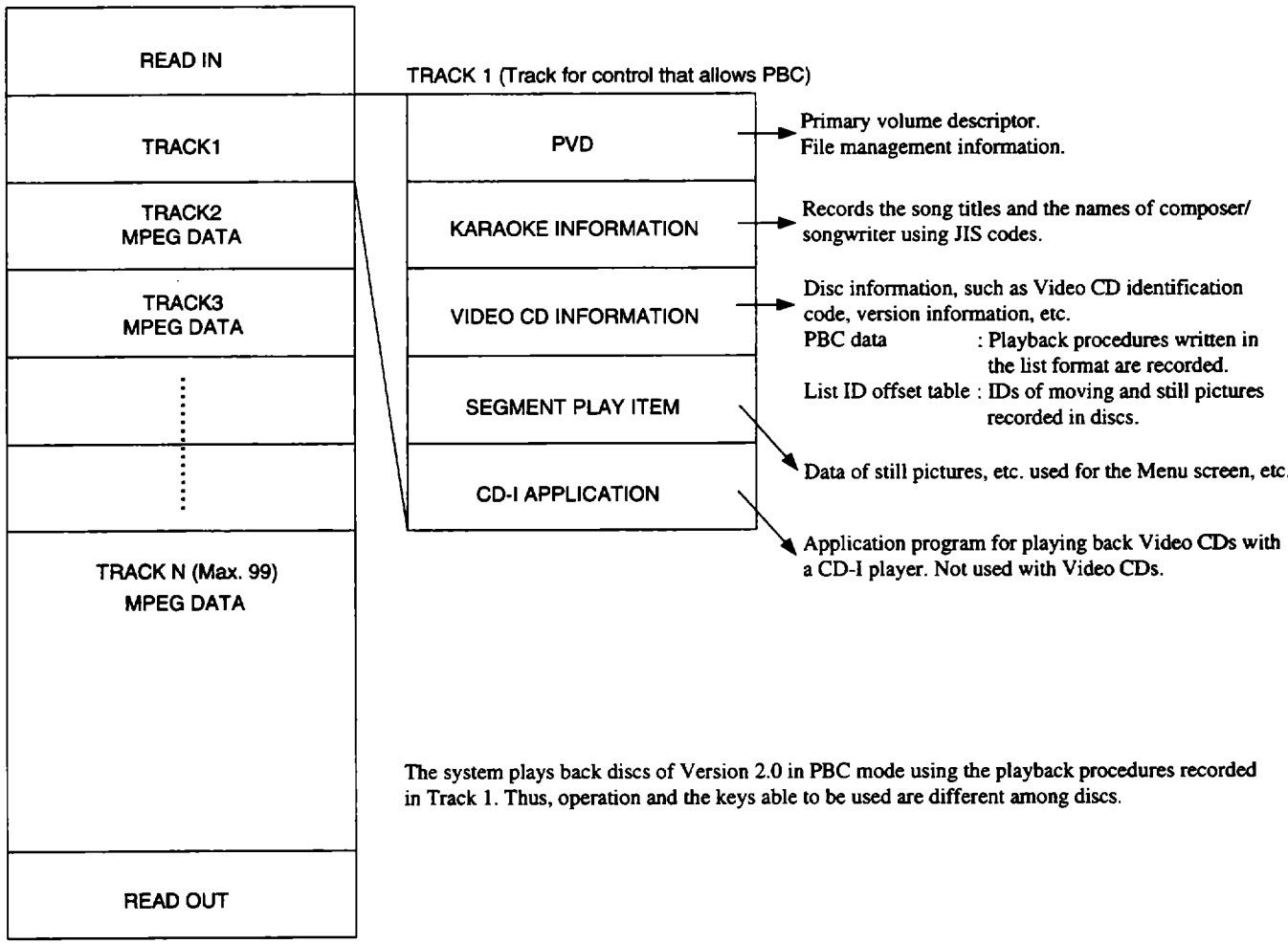

The system plays back discs of Version 2.0 in PBC mode using the playback procedures recorded in Track 1. Thus, operation and the keys able to be used are different among discs.

FiG. 2-4

CLD-3750KV/1750KV : Player compatible with Video CD Version 2.0. When the PBC button is set to ON, discs of Video CD Version 2.0 can be played back in PBC mode. When the PBC button is set to OFF, the system plays back the disc from Track 2. (The display shows "Track 1.") Discs of Version 1.0 are also played back from Track 2. The system does not play back discs of Version 1.0 in PBC mode, even when the PBC button is set to ON.

3. PBC OPERATION

When a disc is played back in PBC mode, playback will be based on the PBC data written in Track 1 of the disc. If the user performs operation disabled by PBC, all such operations will be ignored by the system.

Operation keys during PBC mode

Key	Name	Purpose
PLAY key	Selection	Executes selected items.
STOP key	Return	Terminates the current operation and returns to the previous screen.
FWD SKIP key	Next	Forwards pages, etc.
RVS SKIP key	Previous	Reverses pages, etc.
TEN keys	-	Selects a number and executes, etc.

Fig. 3-1

Although the keys listed in the table above can be basically used for PBC operation, it depends on the discs. With some discs, these keys may not function.

(Normally, information on keys able to be used is written on the disc jacket or in the instruction manual.)

Example of operation

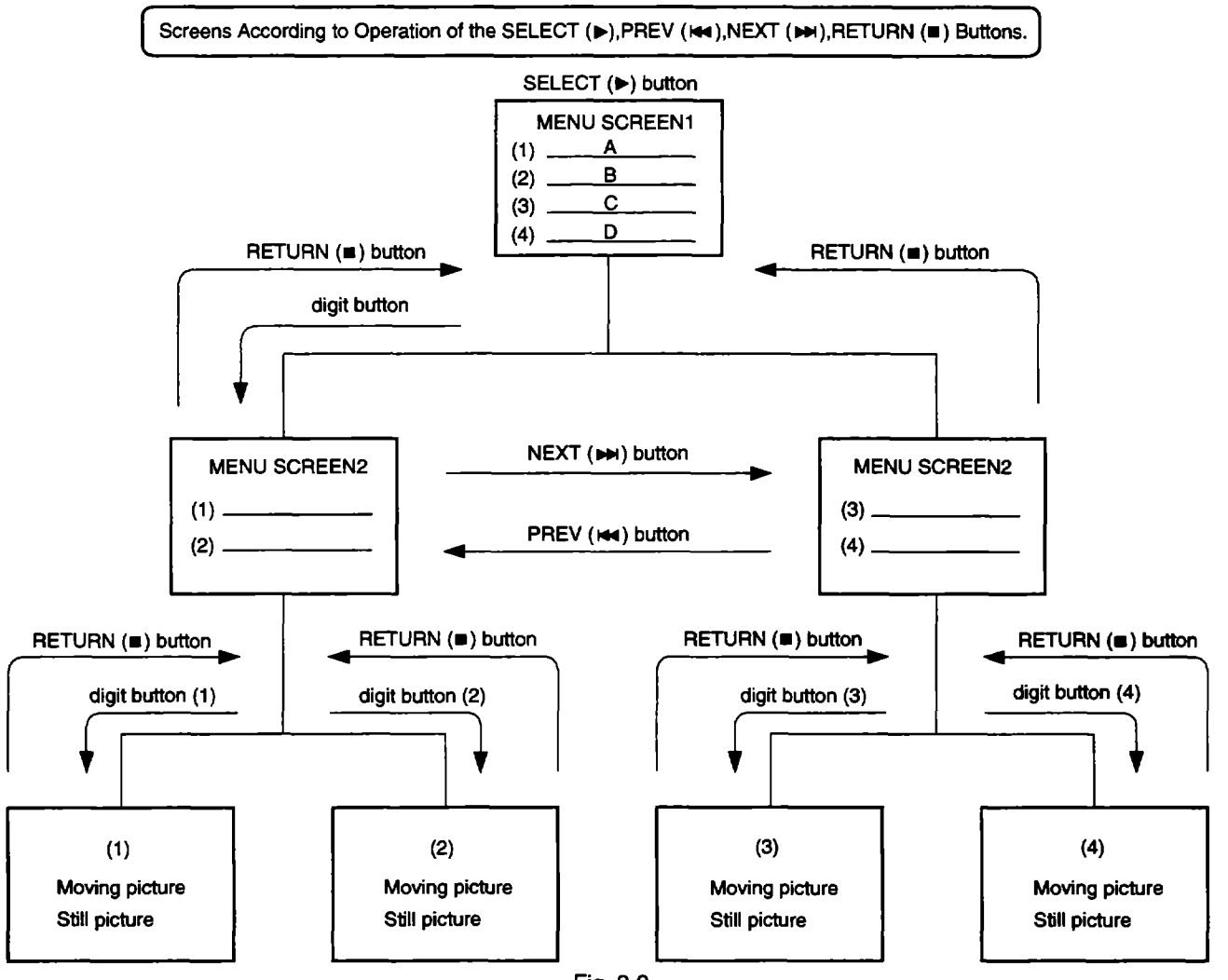

Fig. 3-2

4. SPECIAL PLAYBACK

(1)Scanning

MPEG scanning is performed by continuously displaying only I picture (completed screen able to decoded independently.). Therefore, scanning is made in different manner than with LDs where screens change continuously. In addition, audio is muted during scanning.

Actual scanning operation of the CLD-3750KV and CLD-1750KV is outlined as follows:

When the Scan key is pressed, the system skips tracks for approximately 15 seconds at a point where I picture can be decoded. After that, the system plays back while continuously displaying the previous I picture (incorporating I picture) until the next I picture can be decoded. Once I picture can be decoded, the system changes the display screen and skips tracks again. Scanning is performed by repeating the operation mentioned above. The positions where I pictures are recorded depend on the discs. Therefore, the display time of I picture is not the same. (Although recommended value of MPEG is 0.5 second per picture, some discs recommend 2 seconds per picture.)

Also, changing the screen takes time if the direction to search tracks has changed for reverse scanning. This is because the system plays back the beginning of the track to read the sequence header at the beginning of the track, then return to the end of the track to perform scanning.

The sequence header is important data for decoding MPEG. If an error has occurred, normal screen will not be displayed.

As there is a possibility that the sequence header may be different in every track, the system reads the sequence header.

(2)Pause

Different from LDs, pausing Video CD produces still picture. Still pictures can be made with B or P pictures, as well as I picture. To cancel pause, press the PLAY key or PAUSE key. However, in PBC mode, the PLAY key of the remote control unit functions as a selection key. Thus, pause cannot be canceled by pressing the PLAY button of the remote control unit.

(3)Forwarding frames

With Video CDs, frames can be run in the forward direction as with CAV of LDs. However, frames cannot be run in the reverse direction (reversing frames).

(Because decoding of MPEG uses forecasting in the forward direction, decoding cannot be made in the reverse direction.)

To cancel still-picture mode, press the PLAY key. However, in PBC mode, the PLAY key of the remote control unit functions as a selection key. Thus, still picture cannot be canceled by pressing the PLAY button of the remote control unit.

(4)Repeat between two points

Since starting of repeat is always made from I picture, slight dislocation (approx. 0.5 to 2 seconds) will occur if the position specified by user is not an I picture.

(5)Time search

Although this function is not provided with CDs, the system performs Time Search with Video CDs, by taking into consideration of discs containing motion pictures. As the start position is from an I picture, dislocation may occur.

Scoring Function

As with LDs, scoring is possible when PBC is set to OFF. When PBC is set to ON, some discs may have restrictions on scoring because of the following reasons:

When PBC is set to OFF, the system starts scoring by searching after Track 2, and displays the result of scoring by searching for Track 1. Therefore, with the discs designed to return to the Menu screen every time a song is completed, the system displays the result of scoring correctly. With discs from Victor, the system plays back the next song, without returning to the Menu. Thus, the system plays back the next song without displaying the result of scoring.

With such discs, user must press the PAUSE button in order to display the result of scoring. Another solution is to set PBC to OFF and then perform scoring.

(With karaoke discs using LDC, the system returns to the Menu. Thus, displaying the result of scoring functions correctly.)

Discs currently available on the market have only improper operations as mentioned above. Depending on the content of discs to be introduced in future, other improper operations may appear.

(If still-picture karaoke discs using only Track 1 are introduced, the scoring function cannot be used.)

5. VCDB ASSY/THE METHODS OF REPAIR

5.1 DIAGNOSIS

Block	IC	Functions	Malfunction (defective soldering in the block on the left, or defective parts)
A	IC101	CPU	Cannot identify Video CD.
	IC501	1M RAM	Does not operate.
	IC502	Address decode	
	IC503	Address decodr	
	X101	16MHz clock	
B	IC201	CD-ROM decoder	Cannot identify Video CD.
	IC202	256K RAM	Does not operate.
	IC205	Buffer	
C	IC301	MPEG video decoder	No picture displayed (black screen).
	IC302	4M RAM	Displays distorted screen (with mosaic patterns, deflected synchronization)
	IC305	4M RAM	Identifies Video CD, but does not play back.
	X301	13.5MHz clock	
D	IC401	MPEG audio decoder	No sound is output. Distorted sound is output.
			Displays for several seconds, then stops.
			Identifies Video CD, but does not play back.
E	IC701	3CH (RGB) DAC	No picture displayed
	IC702	RGB encoder	Display is not in color.
	X701	14.3181MHz clock	Displays incorrect colors.
			Displays distorted screen (deflected synchronization)

Fig. 5-1

Test land	Possible malfunctioning point when the signal on the test land is abnormal	
DACK*	IC301	Block C
DRQ*	IC101, address decoder	Block A
CSN	IC101	Block A
WRITE*	IC201	Block B
BSREQN	IC301	Block C
QDVLD	IC401	Block D

*The name of test land is different from the meaning of the signal shown on the test land.

DACK DMA request signal from IC301 to IC101
DRQ DMA enable signal from IC101 to IC301
WRITE Interrupt signal from IC201 to IC101

Fig. 5-2

VCDB ASSY BLOCK DIAGRAM

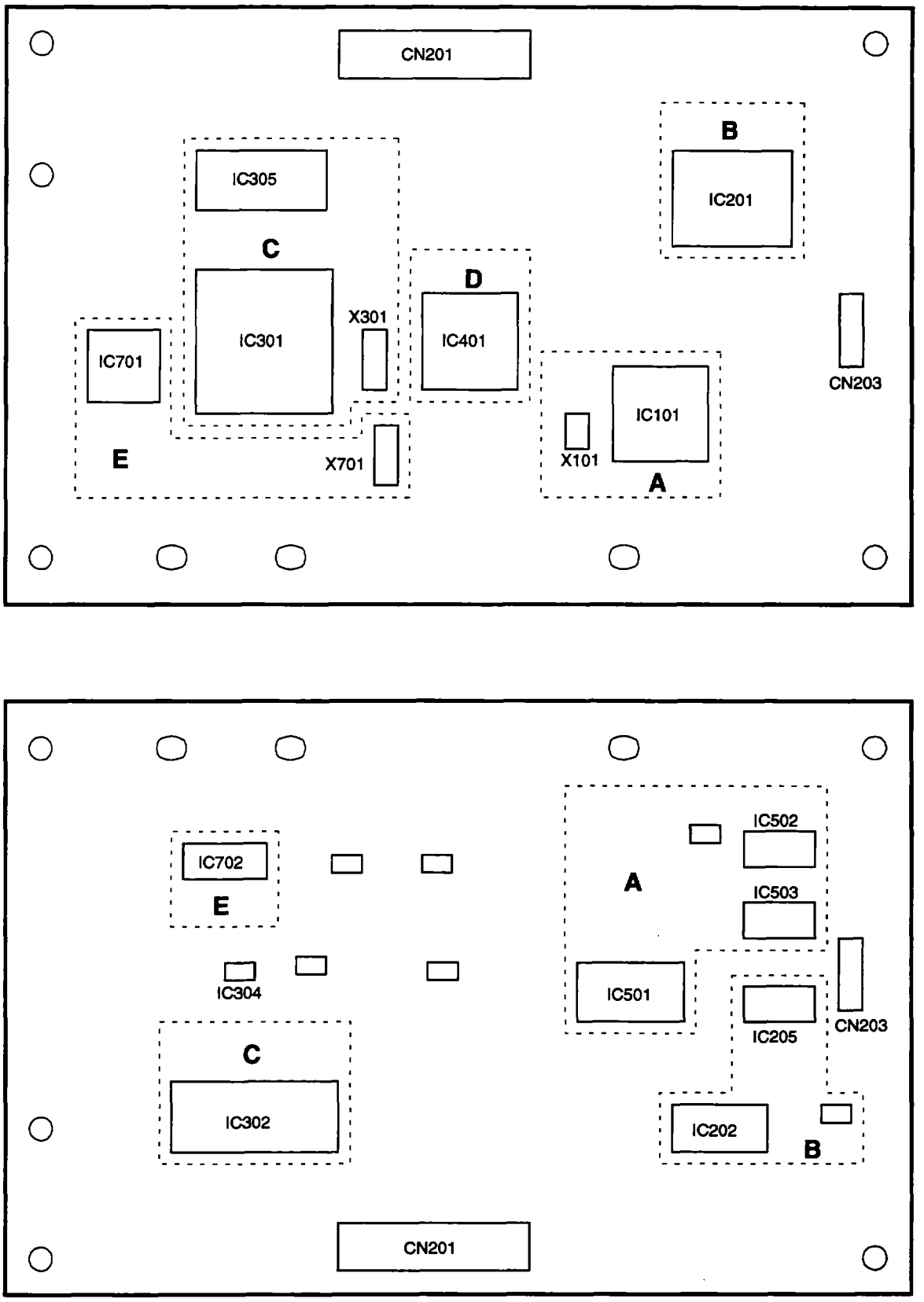

Fig. 5-3

5.2 FLOWCHART OF REPAIR PROCEDURE

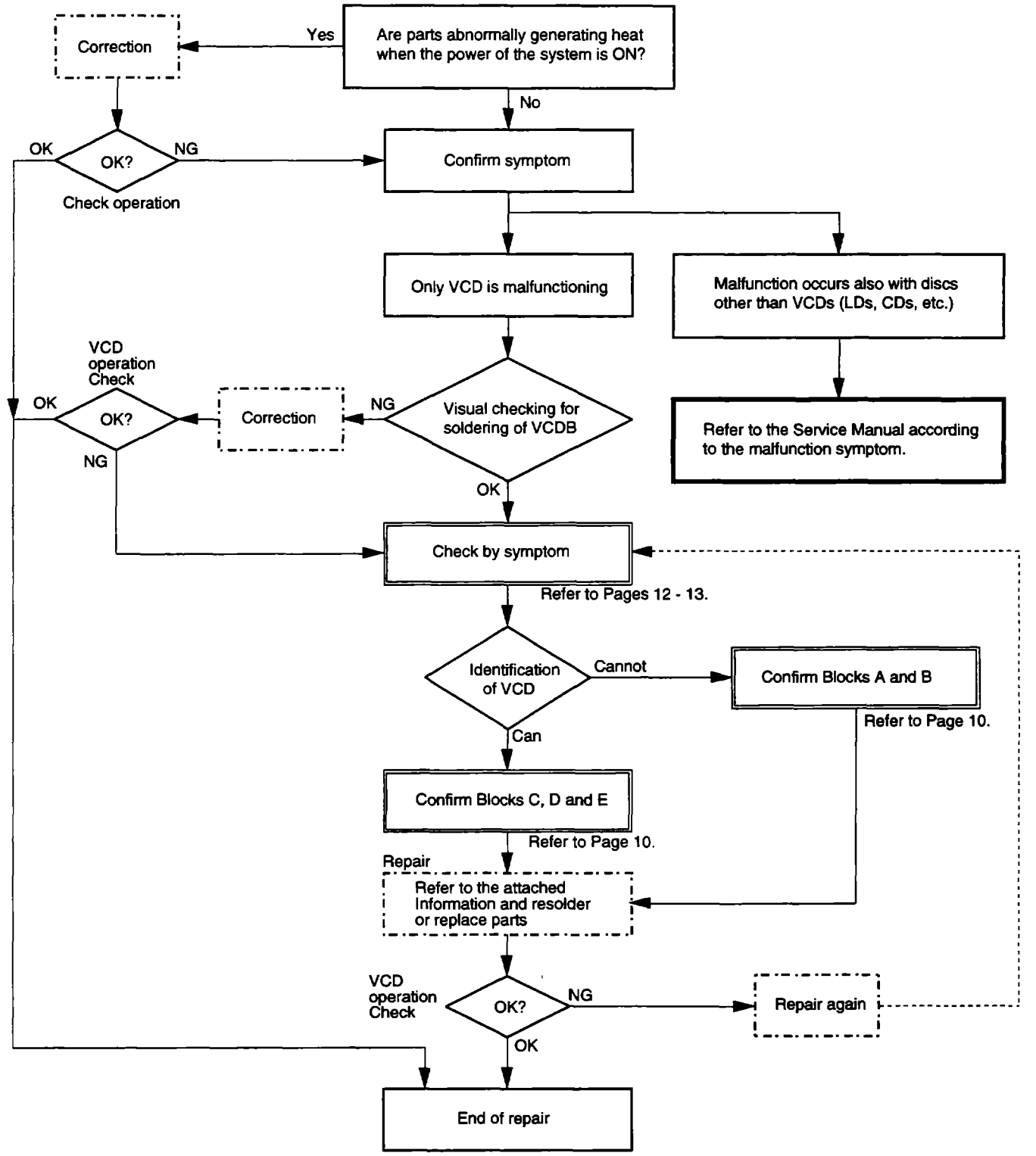

Fig. 5-4

5.3 MANUAL FOR ASSUMPTION OF MALFUNCTIONING POINTS BY SYMPTOM

Cannot identify VCD

1	Is signal input to Pins 5 (CDCLKIN), 6 (LRCKIN), 7 (DATAIN), and 8 (BCKIN) of CN201 of VCD board?	
	Signal is input.	Signal is not input.
		Abnormality in the MOTHER board. → Refer to the **Service Manual**.

2	Is signal of Pin 44 (WAIT) of IC201 normal?	
	Operates correctly.	Remains L.
		Abnormality in IC201 (abnormal in Block B)

3	Is abnormality in the signal between IC201 and IC202? (※)	
	No abnormality	Abnormal
		Abnormality on the signal line between IC201 and IC202

4	Abnormality in the signal of address bus (A0 to A23) and data bus (D8 to D15)? (※)	
	No abnormality	Abnormal
		Abnormality on the signal line of address bus and data bus

5	Abnormality around the address decoder (IC501, IC503)? (defective soldering, short circuit, etc.)	
	No abnormality	Abnormal
	Abnormality in IC101 (abnormality in Block A)	Remedy: Resolder the abnormal point.

※Abnormality in the signal line means that the voltage, waveform, etc. are different between output and input signals. This may be caused by defective soldering on the signal line, short circuit, etc.

The system plays back VCD, but PBC does not function.

→ Abnormality in FRPB. Refer to the **Service Manual**.

Screen is not displayed in color only with VCDs.

X701 (3.58 MHz) is not oscillating.
The signal of 3.58 MHz is not input to Pin 6 (Block E) of IC702.

→ Abnormality in Block E

Fig. 5-5

Identifies VCD, but does not play back.

1	Is Pin 65 (XREQV) of CN301 of the VCD board is set to L, or the test land BSREQN is set to L?	
	Set to L.	Set to H.
		Abnormality in IC301 (abnormality in Block C)

2	Is Pin 5 (XREQA) of IC401 is set to L, or the test land DACK is set to L?	
	Set to L.	Set to H.
	Abnormality in IC101 (abnormality in Block A)	Abnormality in IC401 (abnormality in Block D)

No picture displayed only with VCDs.

1	Is composite signal output to Pin 18 (COMPV) of CN301 of the VCD board?	
	Composite signal is output.	Composite signal is not output.
		Abnormality in the VCD board (abnormality in Block C)

2	Is Pin 5 (XLD/VCD) of CN203 is set to H?	
	Set to H.	Set to L.
	Abnormality in the GRPB board. → Refer to the Service Manual.	Abnormality in the signal line of XLD/VCD of the VCD board. → Refer to the Service Manual.

No sound is output only with VCDs.

1	Is signal output to Pins 10 (LRCKOUT), 11 (DATAOUT), and 12 (BCKOUT) of CN201 of the VCD board?	
	Signal is output.	Signal is not output.
	Abnormality around IC203 of the MOTHER board. → Refer to the Service Manual.	Abnormality in the VCD board (Block D)

Characters shake only with VCDs.

1	Is sine wave of 6.75 MHz output to Pin 4 (6.75M) of CN203 of the VCD board?	
	Sine wave is output.	Sine wave is not output.
	Abnormality in the GRPB board. → Refer to the Service Manual.	Abnormality in IC304

Fig. 5-6

5.4 POSSIBLE COMPLAINTS

Since the system is designed to operate according to the PBC information of the discs, complaints that the user cannot use the system as they wish may be claimed.

Clame	Cause
Playback stops when the Playback Control key is pressed during playback.	When a disc with PBC is used and playback is changed, the place of playback will be changed. Therefore, the system cannot continue playback. Thus, the system stops playback in such a case. Although the system can continue playback of discs without PBC, some discs are not clearly indicated whether they are with PBC or not. Therefore, the system is desinged to operate as mentioned above for all discs.
The system does not accept song selection when PBC is ON, or other songs cannot be selected during playback.	When PBC is set to ON, PBC also controls acceptance of song selection. Therefore, the system does not accept song selection in the scenes where PBC does not allow song selection. If PBC allows reselection of song during playback, the system accepts reselection of songs.(With LDC discs from Victor, songs can be reselected.)
When no operation is made in the Menu for awhile, the system starts playback automatically.	This is one of the functions of PBC. Some discs are designed to be automatically played back after a specified time has elapsed. User can specify whether to play back particular place or in random.
The system does not terminate operation when termination is selected.	This is a malfunction of discs we found with a disc titled "World Fairy Tales." There is no measure to be taken at the player side. There are possibilities that other such defective discs are on the market.
The system does not stop after a single song when PBC is ON.	Since the system merely operates according to PBC, the function to stop after a single song does not function.
Sometimes the Menu can be paused, and sometimes not.	If the Menu is a still picture without sound, pausing of the Menu is disabled because there is no point in allowing this. If the Menu is a still or moving picture with sound, the Menu can be paused.
The system does not return to the Menu after completing a single song when PBC is ON.	PBC is designed to play back the next song without returning to the Menu.
The system plays back the next song without displaying the result of scoring when PBC is ON.	As explained in "Scoring," with discs designed not to return to the Menu after completing a single song, the system plays back the next song without displaying the result of scoring.
The system cannot return to the beginning of the track in reverse scanning when PBC is ON.	If the starting of playback is specified by the entry point, playback ranges from the entry point to the end of that track. Therefore, the system scans only this range.
Sometimes the system does not accept "Select," "Return," "Next" or "Previous" when PBC is ON.	Since functions to be accepted by PBC can be specified, some discs may not accept these keys.
The system displays "Return" when the PAUSE button is pressed during scoring when PBC is ON.	To display the result of scoring, playback must be stopped. When the picture is paused in PBC mode, the system does not stop playback. Therefore, pause during scoring in PBC mode has the return function so that playback can be stopped. Thus, the system displays "Return."
Still/Pause cannot be canceled with the PLAY key when PBC is ON.	When PBC is ON, the PLAY key of the remote control unit also functions as a selection key. In such a case, the PLAY key does not have the usual playback function. Thus, Still/Pause cannot be canceled with the key. To cancel Still/Pause, use the PLAY key of the player.
The system cannot perform Track Search or Repeat when PBC is ON.	When PBC is set to ON, the place of playback is specified by PBC of the disc. Therefore, changing the place of playback by user conflicts with PBC. Thus, this is disabled.

PIONEER®
The Art of Entertainment

Service Manual

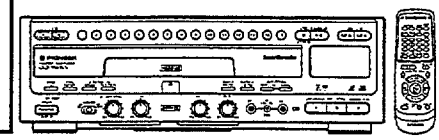

ORDER NO.
RRV1675

CD/VIDEO CD/LD PLAYER

CLD-3760KV

THIS MANUAL IS APPLICABLE TO THE FOLLOWING MODEL(S) AND TYPE(S).

Type	Model	Power Requirement	Remarks
	CLD-3760KV		
RD	○	AC110-127V/220-240V	Automatic selector
RDXQ/NC	○	AC110-127V/220-240V	Automatic selector
RL	○	AC110-127V/220-240V	Automatic selector

CONTENTS

1. SAFETY INFORMATION ····· 2
2. EXPLODED VIEWS AND PARTS LIST ····· 3
3. SCHEMATIC DIAGRAMS ····· 14
4. PCB CONNECTION DIAGRAMS ····· 34
5. PCB PARTS LIST ····· 48
6. ADJUSTMENTS ····· 54
7. GENERAL INFORMATION ····· 66
   7.1 PARTS ····· 66
      7.1.1 IC ····· 66
      7.1.2 DISPLAY ····· 89
   7.2 DIAGNOSIS ····· 90
      7.2.1 SELF-DIAGNOSTIC FUNCTIONS ····· 90
      7.2.2 DISASSEMBLY/ASSEMBLY ····· 93
      7.2.3 AGEING MODE ····· 96
      7.2.4 VCD COLOR BAR OUTPUT ····· 97
   7.3 BLOCK DIAGRAM ····· 98
8. PANEL FACILITIES AND SPECIFICATIONS ···101

PIONEER ELECTRONIC CORPORATION 4-1, Meguro 1-Chome, Meguro-ku, Tokyo 153, Japan
PIONEER ELECTRONICS SERVICE, INC. P.O. Box 1760, Long Beach, CA 90801-1760, U.S.A.
PIONEER ELECTRONIC (EUROPE) N.V. Haven 1087, Keetberglaan 1, 9120 Melsele, Belgium
PIONEER ELECTRONICS ASIACENTRE PTE. LTD. 501 Orchard Road, #10-00 Lane Crawford Place, Singapore 0923

© PIONEER ELECTRONIC CORPORATION 1996

T-IZM SEPT. 1996 Printed in Japan

1. SAFETY INFORMATION

VARO!
AVATTAESSA JA SUOJALUKITUS OHITETTAESSA OLET ALTTIINA NÄKYMÄTTÖMÄLLE LASERSÄTEILYLLE. ÄLÄ KATSO SÄTEESEEN.

ADVERSEL:
USYNLIG LASERSTRÅLING VED ÅBNING NÅR SIKKERHEDSAFBRYDERE ER UDE AF FUNKTION UNDGÅ UDSAETTELSE FOR STRÅLING.

VARNING!
OSYNLIG LASERSTRÅLNING NÄR DENNA DEL ÄR ÖPPNAD OCH SPÄRREN ÄR URKOPPLAD. BETRAKTA EJ STRÅLEN.

LASER
Kuva 1
Lasersateilyn varoitusmerkki

WARNING!
DEVICE INCLUDES LASER DIODE WHICH EMITS INVISIBLE INFRARED RADIATION WHICH IS DANGEROUS TO EYES. THERE IS A WARNING SIGN ACCORDING TO PICTURE 1 INSIDE THE DEVICE CLOSE TO THE LASER DIODE.

IMPORTANT
THIS PIONEER APPARATUS CONTAINS LASER OF CLASS 1.
SERVICING OPERATION OF THE APPARATUS SHOULD BE DONE BY A SPECIALLY INSTRUCTED PERSON.

LASER DIODE CHARACTERISTICS
MAXIMUM OUTPUT POWER: 5 mw
WAVELENGTH: 780-785 nm

LASER
Picture 1
Warning sign for laser radiation

LABEL CHECK

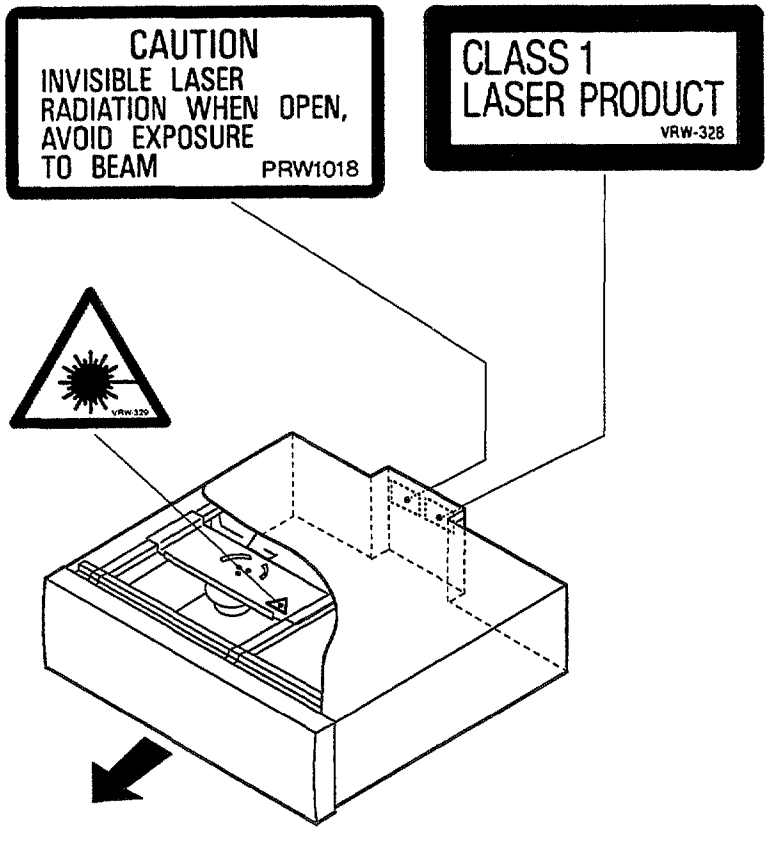

Additional Laser Caution

1. The ON/OFF statuses of the side-A/B detection switch (TURN switch on the TNSB assy), slider-position detection switches (INNER and OUTER on the PKSB assy) and loading-status detection switches (SW 1, 2 and 3 on the LMSB assy) are detected by the microprocessor (IC101 in the MOTHER assy). To permit the laser diode to oscillate, it is required to set the side-A/B detection switch for side A status (TRN : OFF) and the slider-position detection switches for the LD ACTIVE status (INNER : OFF, OUTER : OFF), and to set the loading-status detection switches for tilt neutral state (SW1 : OFF, SW2 : OFF, SW3 : ON). As long as these requirements are not satisfied, the laser diode will not oscillate. When the requirements are met in any way, the laser diode can oscillate. The laser diode oscillation will continue if pin 13 of IC801 is shorted to GND or the emitter and collector of Q834 are shorted each other (fault condition) in MOTHER assy.
   In the test mode ＊ , the laser diode oscillates when the microprocessor detects a PLAY signal, or when the PLAY key is pressed (S102 ON in the FLKB assy), with the above requirements satisfied.
2. When the cover is open, close viewing through the objective lens with the naked eye will cause exposure to a Class 1 laser beam.

＊ : Refer to pages 56 and 57.

2. EXPLODED VIEWS AND PARTS LIST

NOTES: ● *Parts marked by "NSP" are generally unavailable because they are not in our Master Spare Parts List.*
● *The ⚠ mark found on some component parts indicates the importance of the safety factor of the part. Therefore, when replacing, be sure to use parts of identical designation.*

2.1 PACKING

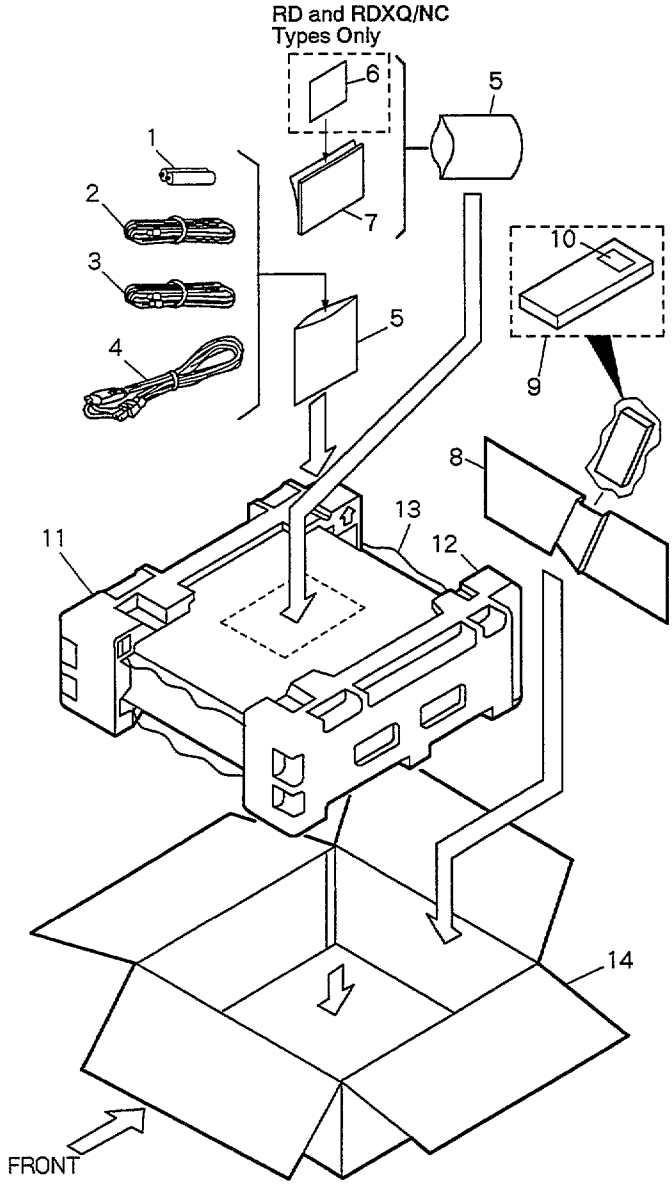

(1) PARTS LIST

Mark	No.	Description	Part No.
NSP	1	Dry Cell Battery (R03, AAA)	VEM-022
	2	Video Cord	VDE1048
	3	Audio Cord	VDE1033
⚠	4	AC Power Cord	See Contrast table (2)
	5	Polyethylene Bag (230 × 340 × 0.03)	Z21-038
NSP	6	Warranty Card	See Contrast table (2)
	7	Operating Instructions (English/Spanish/Chinese)	VRE1055
	8	RCU Holder	VHC1040
	9	Remote Control Unit (CU-CLD145)	VXX2460
	10	Battery Cover	VNK2805
	11	Pad L	VHA1177
	12	Pad R	VHA1178
	13	Mirror Mat	DHL1006
	14	Packing Case	See Contrast table (2)

(2) CONTRAST TABLE

CLD-3760KV/RD, RDXQ/NC and RL have the same construction except for the following:

Mark	No.	Symbol & Description	Part No.			Remarks
			RD type	RDXQ/NC type	RL type	
⚠	4	AC Power cord	ADG1158	ADG1158	ADG1154	
NSP	6	Warranty Card	ARW1020	ARW1020	Not used	
	14	Packing Case	VHG1627	VHG1653	VHG1662	

2.2 EXTERIOR AND DISC TRAY SECTION

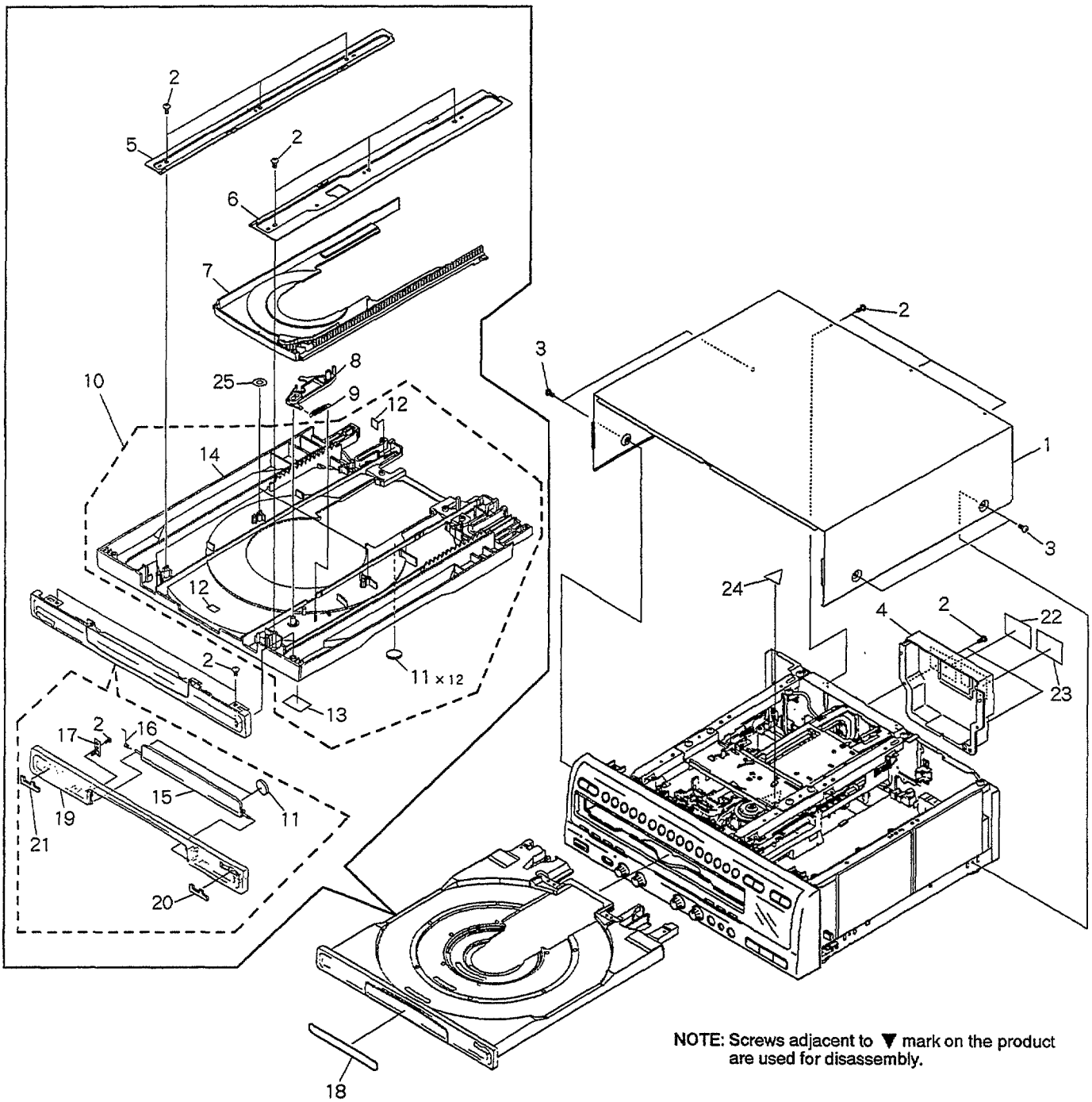

NOTE: Screws adjacent to ▼ mark on the product are used for disassembly.

(1) PARTS LIST

Mark	No.	Description	Part No.
	1	Bonnet S	See Contrast table (2)
	2	Screw	BBZ30P080FMC
	3	Screw	BCZ40P060FZK
	4	Rear Cover	See Contrast table (2)
	5	Guide Plate (R)	VNE1939
	6	Guide Plate (L)	VNE1938
	7	CD Tray	VNK3007
	8	Lock Plate	VNL1703
	9	Lock Plate Spring	VBH1188
	10	Tray Assy-S	VXX2307
	11	Cushion	VEC1682
	12	Damp Cushion	VEC1683
NSP	13	Label	VRW1289
	14	LD Tray Assy	VXA2173
	15	CD Door Assy	VXA2315
	16	Door Spring	VBH1248
	17	Door Holder	VNL1704
NSP	18	Getter	VRW1615
	19	Tray Panel	VNK3881
	20	Karaoke Plate	VAM1055
	21	Name Plate	PAM1704
	22	Caution Label	PRW1018
NSP	23	Caution Label (F)	VRW-328
	24	Caution Label (G)	VRW-329
	25	Fiber Washer	VEC1254

(2) CONTRAST TABLE

CLD-3760KV/RD, RDXQ/NC and RL have the same construction except for the following:

Mark	No.	Symbol & Description	Part No.			Remarks
			RD type	RDXQ/NC type	RL type	
	1	Bonnet S	VXX2252	VXX2411	VXX2252	
	4	Rear Cover	VNK3885	VNK3961	VNK3886	

2.3 TOP VIEW SECTION

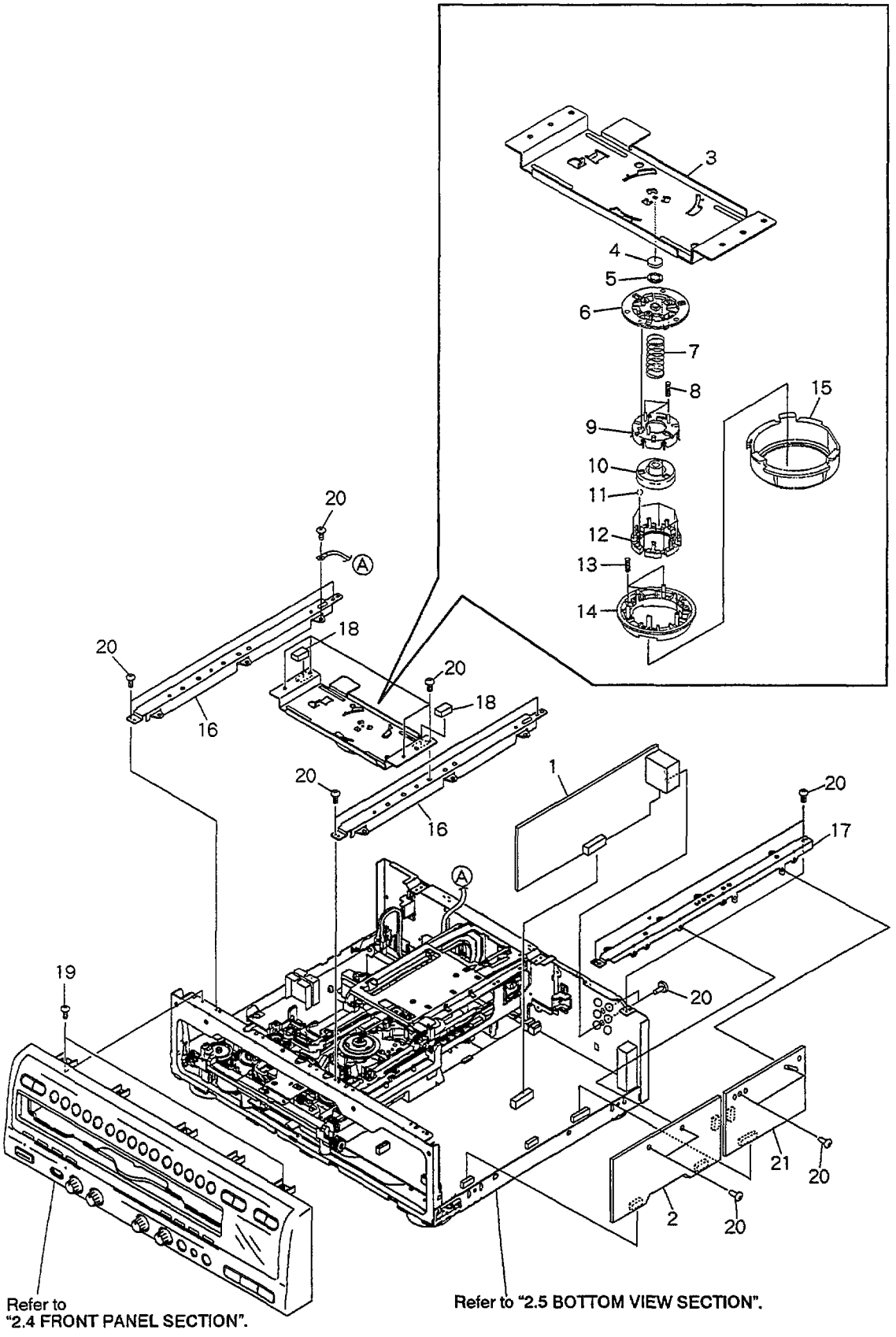

Parts List

Mark	No.	Description	Part No.
	1	KRAB Assy	VWV1491
	2	GRPB Assy	VWV1503
	3	Center Plate	VNE1971
	4	Rubber Mat	VEB1114
	5	Thrust Holder	VNL1663
	6	Clamper Head	VNL1603
	7	LD Spring	VBH1240
	8	Cover Spring	VBH1234
	9	Ball Cover	VNL1602
	10	LD Hab	VNT1047
	11	Steel Ball	VNX1013
	12	Ball Guide	VNL1616
	13	Clamp Spring	VBH1239
	14	Clamper	VNL1604
	15	Clamper Holder	VNL1680
	16	Center Angle	VNE1965
NSP	17	PCB Holder	VNE2087
NSP	18	Damp Cushion	VEC1602
	19	Screw	IBZ30P080FMC
	20	Screw	BBZ30P080FMC
	21	VCDB Assy	VWV1507

2.4 FRONT PANEL SECTION

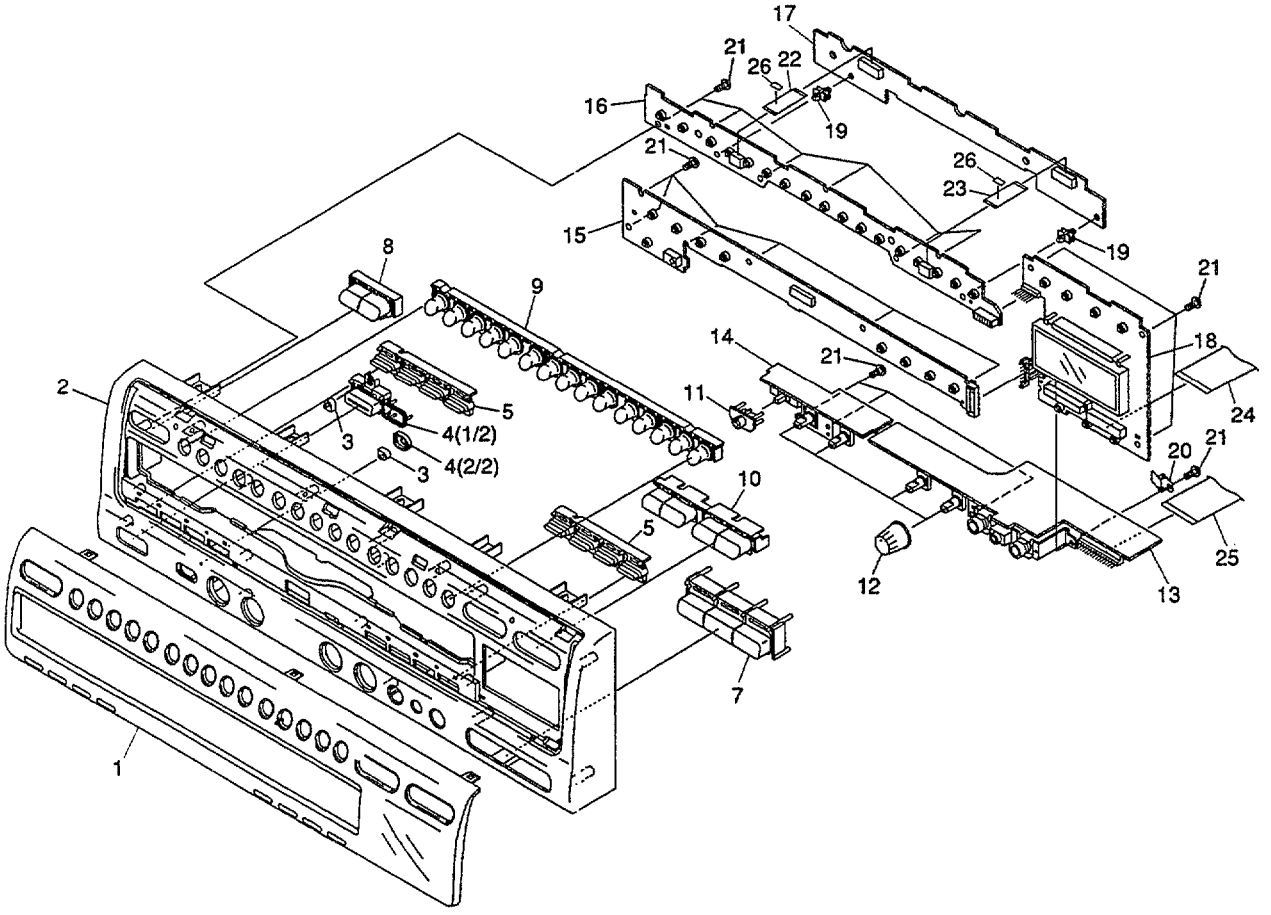

Parts List

Mark	No.	Description	Part No.
	1	Center Panel	VNK3883
	2	Front Panel	VNK3669
	3	LED Lens	PNW2019
	4	PW Button	VNK3179
	5	L Key A	VNK3688
	6	• • • • •	
	7	Key Con. Button	VNK3674
	8	A/B Button	VNK3678
	9	15 Key	VNK3673
	10	Play Button	VNK3676
	11	Slide Knob	VNK3187
	12	VR Knob	VNK3677
NSP	13	JACB Assy	VWV1492
NSP	14	VRSB Assy	VWG1761
	15	KALB Assy	VWG1762
NSP	16	DIKB Assy	VWG1763
NSP	17	IOEB Assy	VWG1764
	18	FLKB Assy	VWG1765
NSP	19	PC Support (B)	VEC1244
	20	Earth Plate	VNE2027
	21	Screw	BBZ30P080FMC
	22	Flexible Cable (10P) (DIKB CN303 – IOEB CN702)	VDA1557
	23	Flexible Cable (10P) (DIKB CN302 – IOEB CN701)	VDA1557
	24	Flexible Cable (24P) (FLKB CN102 – MOTHER CN107)	VDA1564
	25	Flexible Cable (19P) (JACB CN501 – KRAB CN102)	VDA1552
	26	Spacer	VEC1894

2.5 BOTTOM VIEW SECTION

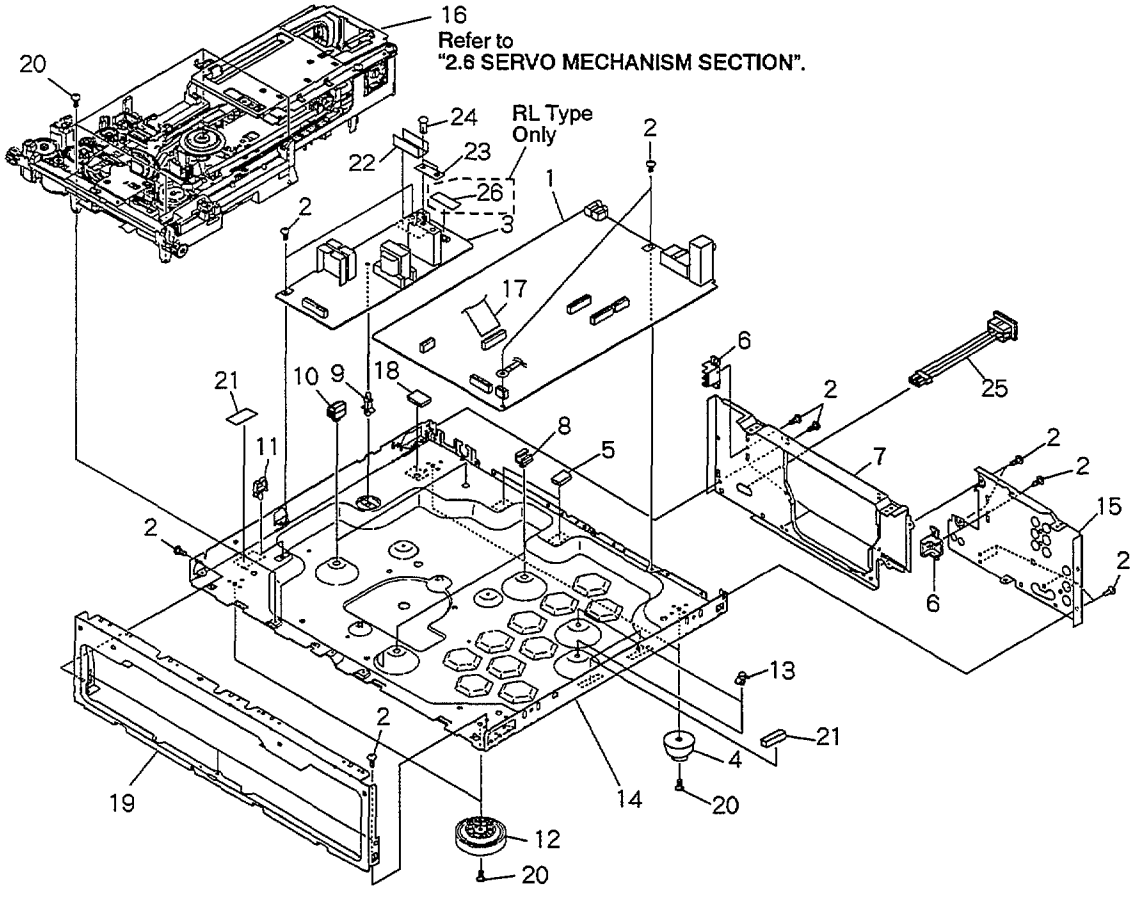

(1) PARTS LIST

Mark	No.	Description	Part No.
	1	MOTHER Assy	VWS1252
	2	Screw	BBZ30P080FMC
⚠	3	POWER SUPPLY Assy	VWR1268
	4	Insulator Assy	VXA2295
NSP	5	Rubber Spacer	VEB1252
	6	Tray Stopper	VNL1657
	7	Rear Panel (R)	VNA1606
NSP	8	P Plate Holder	PNY-405
NSP	9	PC Support	VEC-269
	10	PCB Hinge	VEC1174
NSP	11	Wire Clip (H)	VEC1181
	12	Insulator	PNW1912
	13	Card Spacer A	VEC1708
NSP	14	Chassis	VNA1564
	15	Rear Panel (L)	VNA1726

Mark	No.	Description	Part No.
NSP	16	Mechanism Assy	VWT1131
	17	Flexible Cable (21P) (MOTHER CN102-POWER SUPPLY CN202)	VDA1465
	18	Spacer	PEB1275
NSP	19	Panel Holder	See Contrast table (2)
	20	Screw	BBZ30P100FMC
	21	Spacer	REB1171
	22	Barrier Sheet	VEC1877
	23	Barrier Sheet	VEC1878
	24	Rivet	DEC-176
⚠	25	AC Inlet Assy	VKP2116
NSP	26	Fuse Card	See Contrast table (2)

(2) CONTRAST TABLE

CLD-3760KV/RD, RDXQ/NC and RL have the same construction except for the following:

Mark	No.	Symbol & Description	Part No.			Remarks
			RD type	RDXQ/NC type	RL type	
NSP	19	Panel Holder	VNA1835	VNA1714	VNA1835	
NSP	26	Fuse Card	Not used	Not used	AAX1581	

2.6 SERVO MECHANISM SECTION

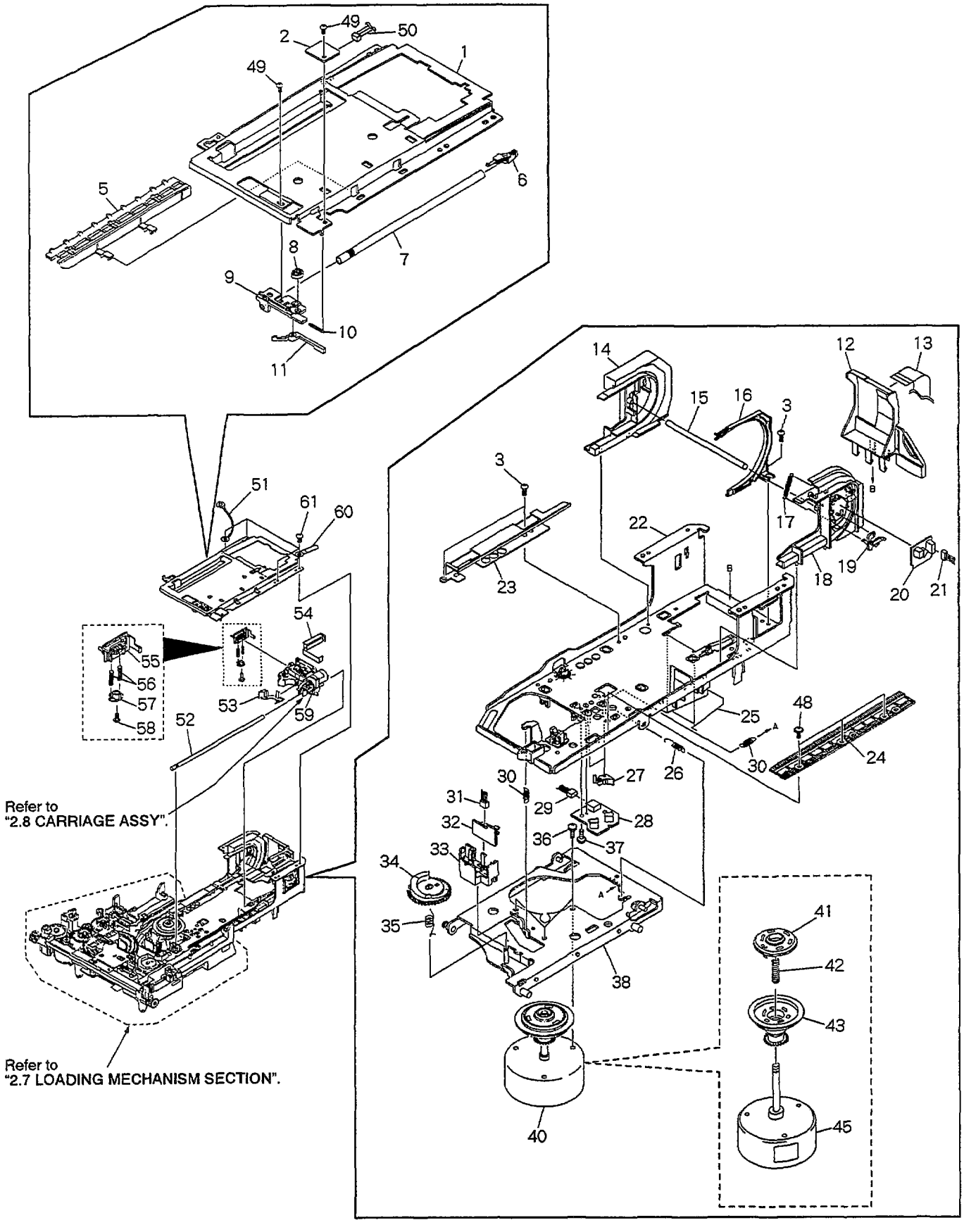

Parts List

Mark	No.	Description	Part No.
	1	Tilt Base (upper)	VNE1969
NSP	2	BISB Assy	VWG1558
	3	Screw	BBZ30P060FMC
	4	• • • • •	
	5	Rack (Upper)	VNL1679
	6	Shaft Stay	VNL1671
	7	Carriage Shaft (upper)	VLL1478
	8	B Cam	VNL1673
	9	Shaft Support	VNL1672
	10	Support Spring	VBH1265
	11	SW Lever (B)	VNL1678
	12	Large hill	VNL1682
	13	Flexible Cable (23P)	VDA1528
	14	Turn Guide	VNL1701
	15	FFC Style Shaft	VLL1474
	16	Guide	VNL1674
	17	Lever Spring	VBH1266
	18	Turn Gear	VNL1702
	19	SW Lever (T)	VNL1695
NSP	20	TNSB Assy	VWG1557
	21	Housing Assy (3P, Black)	VKP2059
	22	Tilt Base (Under)	VNL1670
	23	TAN Guide	VNE1973
	24	CA Rack	VNL1647
	25	FFC Style Spring	VBH1270
	26	Thrust Spring	VBH1245
	27	CA-SW Lever	VNL1644
NSP	28	PKSB Assy	VWG1555
	29	Housing Assy (3P, Blue)	VKP2045
	30	Tilt Spring	VBH1263
	31	Housing Assy (3P, Yellow)	VKP2046
NSP	32	FG Assy	VWG1556
	33	FG Base	VNL1645
	34	Tilt Cam	VNL1643
	35	Tilt Cam Spring	VBH1243
	36	Screw	PMA30P050FMC
	37	Screw	IBZ26P120FMC
	38	Motor Base	VNE1941
	39	• • • • •	
	40	Spindle Motor Assy	VXA2271
	41	PRC Hub	VNL1684
	42	Centering Spring	VBH1269
NSP	43	R Turn Table Assy	VXA2225
	44	• • • • •	
NSP	45	Spindle Motor	VXM1057
	46	• • • • •	
	47	• • • • •	
	48	Screw	IBZ26P060FMC
	49	Screw	BPZ20P040FZK
	50	Housing Assy (2P, Red)	VKP2060
NSP	51	Earth Lead Unit	DE007VF0
	52	Carriage Shaft (Under)	VLL1493
	53	Body Guard	VNL1681
	54	FFC Holder	VNL1706
	55	CA Guide	VNL1668
	56	TAN Spring (B)	VBH1264
	57	TAN Lever (B)	VNL1669
	58	Screw	PMZ20P060FZK
	59	Carriage Assy	VWT1110
NSP	60	Cord Binder	ZCB-069Z
	61	Screw	BBZ30P080FMC

2.7 LOADING MECHANISM SECTION

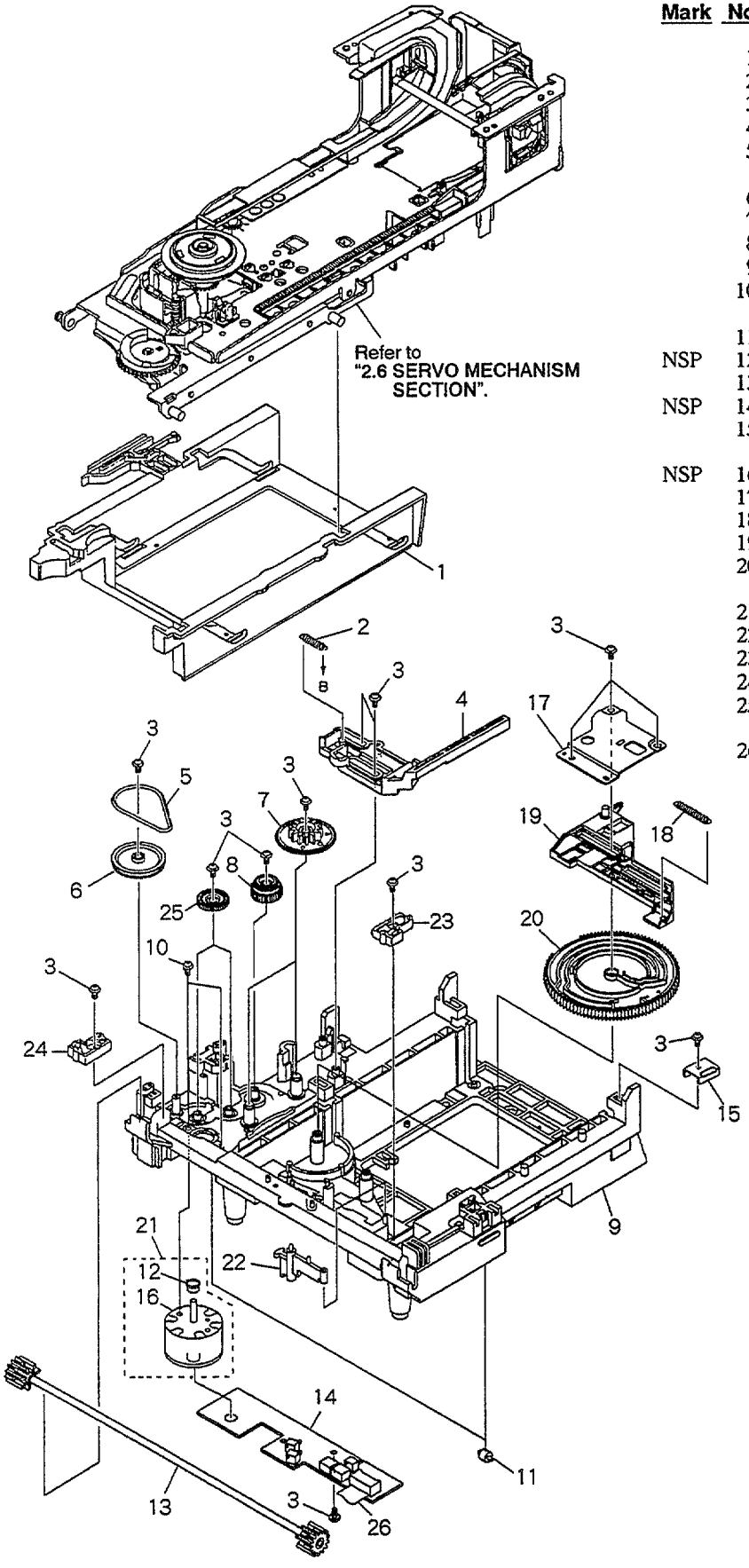

Parts List

Mark	No.	Description	Part No.
	1	Clamp Cam	VNL1633
	2	CDP Spring	VBH1191
	3	Screw	Z39-019
	4	CD Plate	VNL1685
	5	Rubber Belt	VEB1184
	6	Gear Pulley	VNL1662
	7	Twin Gear	VNL1626
	8	Center Gear	VNL1660
	9	Mechanism Base	VNK3239
	10	Screw	BMZ26P040FMC
	11	Roller	VNL1042
NSP	12	Motor Pulley	VNL1630
	13	Synchro Gear Assy	VXA2105
NSP	14	LMSB Assy	VWG1612
	15	Cam Holder	VNE2032
NSP	16	Carriage Motor	VXM1033
	17	Shaft Holder	VNE1942
	18	CAS Spring	VBH1190
	19	Cam Plate	VNL1631
	20	Cam Gear	VNL1625
	21	Loading Motor Assy	VXX2045
	22	MB-SW Lever	VNL1664
	23	Slider (R)	VNL1666
	24	Slider (L)	VNL1665
	25	Double Gear	VNL1661
	26	Flexible Cable (12P)	VDA1485

2.8 CARRIAGE ASSY

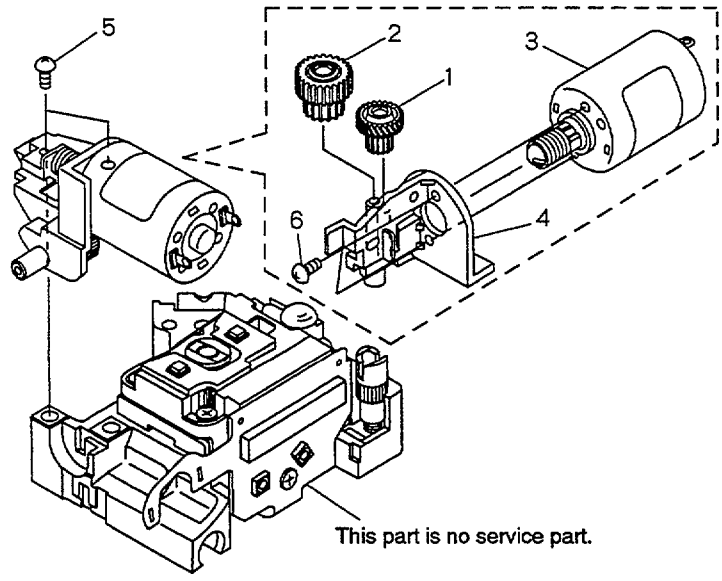

Parts List

Mark	No.	Description	Part No.
	1	CA Gear (A)	VNL1638
	2	CA Gear (B)	VNL1639
	3	Slider Motor Assy	VXX2082
	4	M Holder	VNL1700
	5	Screw	PBZ20P060FMC
	6	Screw	PMZ20P030FMC

3. SCHEMATIC DIAGRAMS

3.1 OVERALL CONNECTIONS, PKSB, FG, TNSB, BISB, LMSB AND CARRIAGE ASSEMBLIES

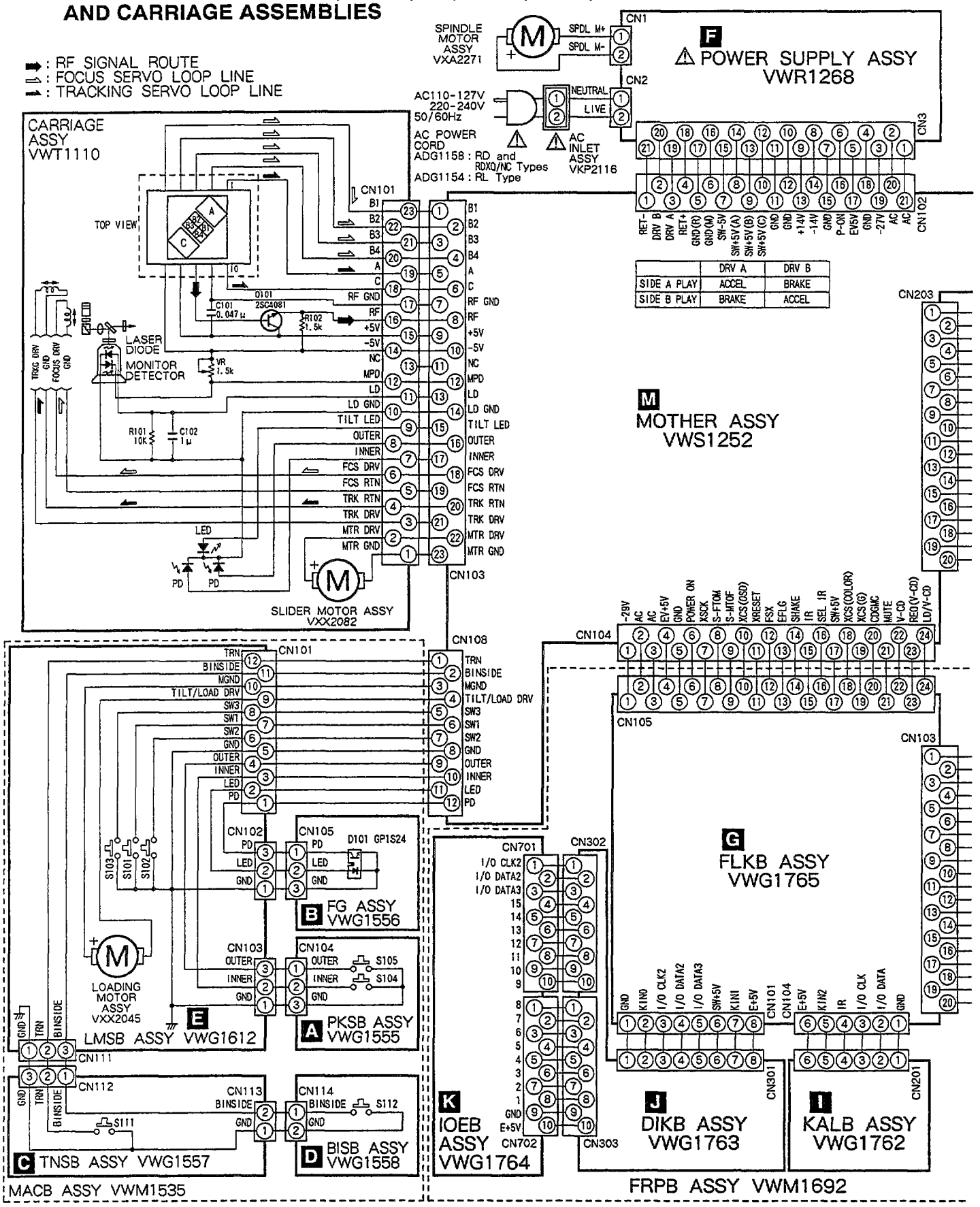

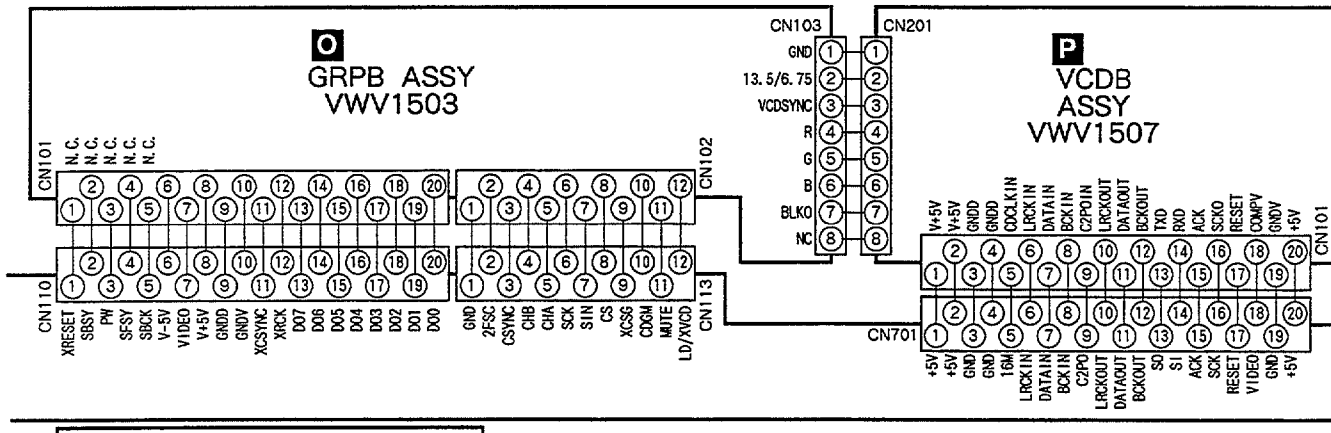

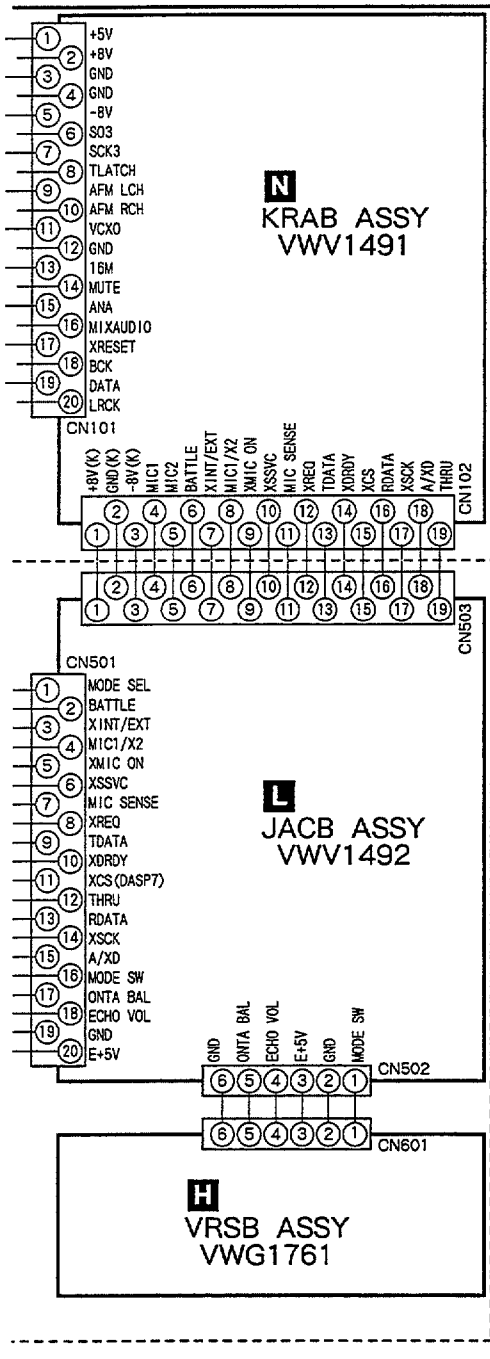

NOTE FOR SCHEMATIC DIAGRAMS

(Type 4A)

1. When ordering service parts, be sure to refer to "PARTS LIST of EXPLODED VIEWS" or "PCB PARTS LIST".

2. Since these are basic circuits, some parts of them or the values of some components may be changed for improvement.

3. RESISTORS:
Unit: k:kΩ, M:MΩ, or Ω unless otherwise noted.
Rated power: 1/4W, 1/6W, 1/8W, 1/10W unless otherwise noted.
Tolerance:(F):±1%, (G):±2%, (K):±10%, (M):±20% or ±5% unless otherwise noted.

4. CAPACITORS:
Unit : p:pF or μF unless otherwise noted.
Ratings : capacitor (μF) / voltage (V) unless otherwise noted.
Rated voltage : 50V except for electrolytic capacitors.

5. COILS:
Unit : m:mH or μH unless otherwise noted.

6. VOLTAGE AND CURRENT:
▭ or ←V :
DC voltage (V) in PLAY mode unless otherwise noted.
⇦mA or ←mA :
DC current in PLAY mode unless otherwise noted.
Value in ( ) is DC current in STOP mode.

7. OTHERS:
- ●⊘ or ⊘ : Adjusting point.
- ●◀ : Measurement point.
- The ⚠ mark found on some component parts indicates the importance of the safety factor of the parts. Therefore, when replacing, be sure to use parts of identical designation.

8. SWITCHES
(Underline indicates switch position):

LMSB ASSY
- S101 : SW1
- S102 : SW2
- S103 : SW3

PKSB ASSY
- S105 : OUTER

BISB ASSY
- S112 : B INSIDE
- S104 : INNER

TNSB ASSY
- S111 : TURN

BISB ASSY
- S112 : B INSIDE

FLKB ASSY
- S101 : STOP(■)
- S102 : PLAY/PAUSE(▶/❚❚)
- S103 : OPEN/CLOSE(CD ▲)
- S104 : OPEN/CLOSE(LD ▲)
- S105 : ♭
- S106 : ♮
- S107 : ♯

VRSB ASSY
- S601 : NORMAL/KARAOKE/AUX INPUT

KALB ASSY
- S201 : POWER STANDBY/ON
- S202 : SINGLE PLAY
- S203 : VOCAL PARTNER
- S204 : ONE-TOUCH KARAOKE
- S205 : ONE-TOUCH GUIDE VOCAL
- S206 : VIDEO CD SYSTEM
- S207 : PLAYBACK CONTROL
- S208 : COMPETITION] SCORING
- S209 : NORMAL]

DIKB ASSY
- S301 : A
- S302 : B] DISC SIDE
- S303 : 1
- S304 : 2
- S305 : 3
- S306 : 4
- S307 : 5
- S308 : 6
- S309 : 7
- S310 : 8
- S311 : 9
- S312 : 10
- S313 : 11
- S314 : 12
- S315 : 13
- S316 : 14
- S317 : 15

KRAB ASSY
- S301 : ATTENUATOR

3.2 POWER SUPPLY ASSY

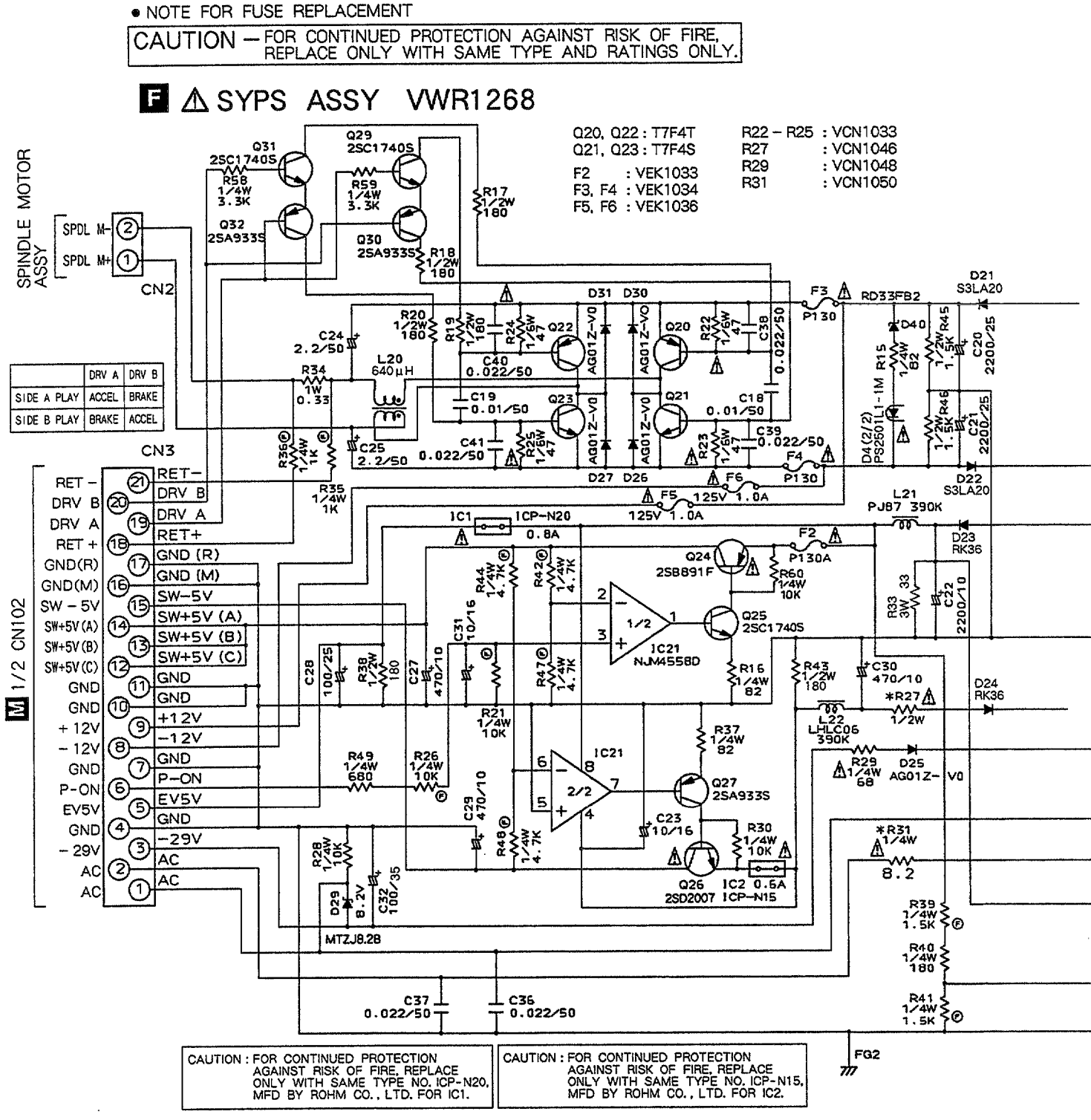

《NOTE OF SPARE PARTS IN POWER SUPPLY (SYPS) ASSY》

- In case of repairing, use the described parts only to prevent an accident.
- Please write the red √ mark on the board when the primary section of POWER SUPPLY (SYPS) Assy is repaired.
- Please take care to keep the space, not touching other parts when replacing the parts.

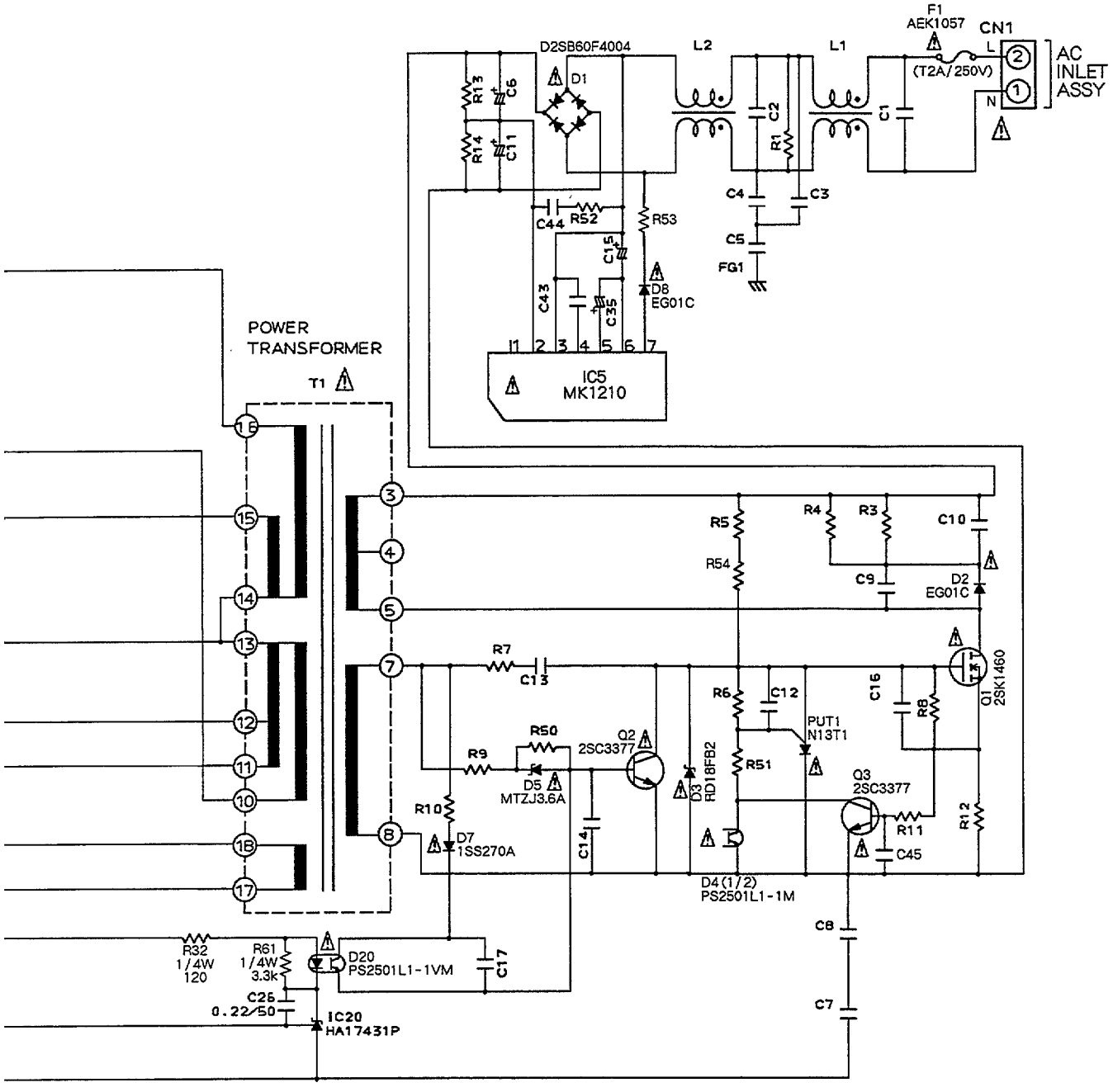

3.3 FLKB, VRSB, KALB, DIKB, IOEB AND JACB ASSEMBLIES

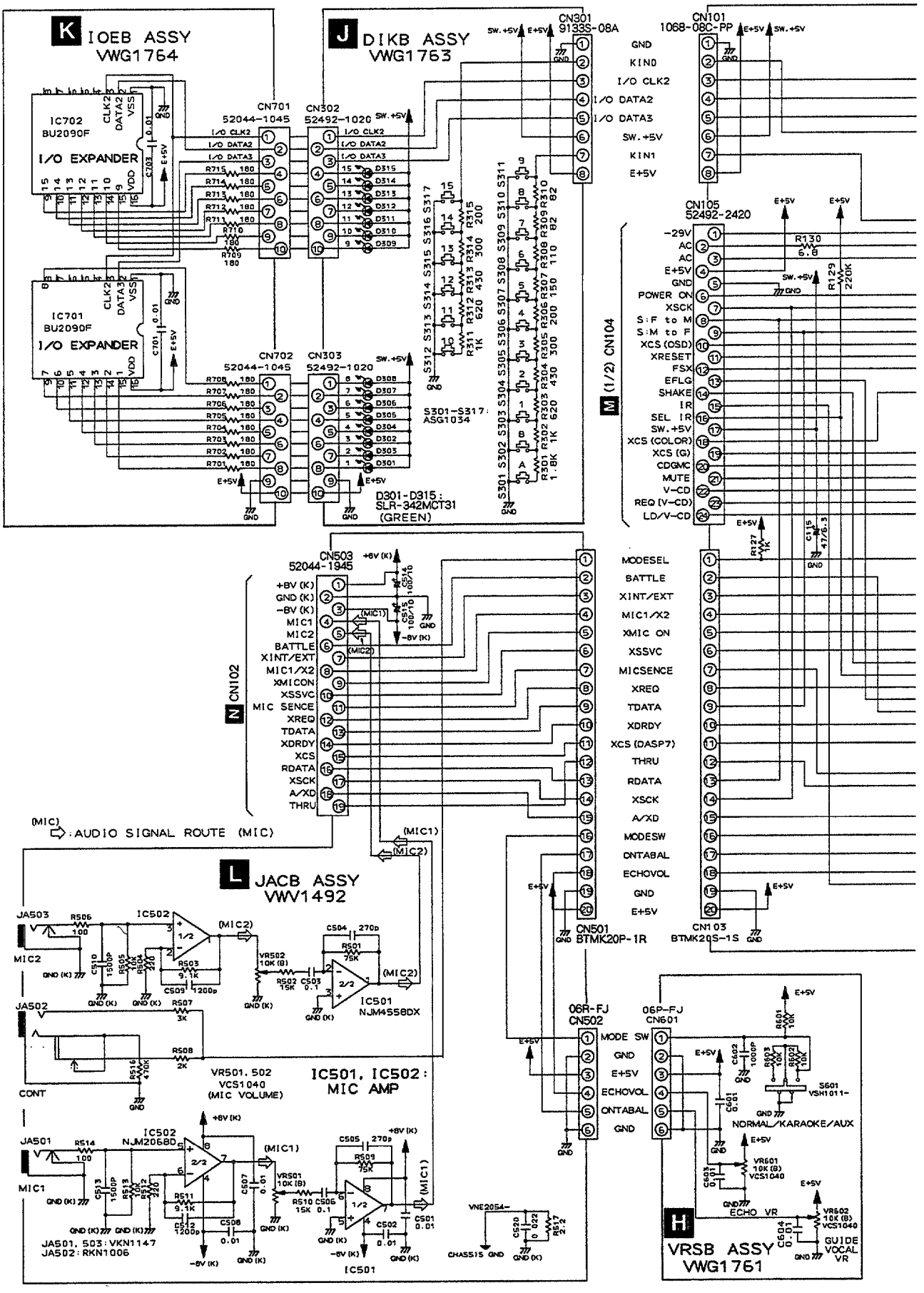

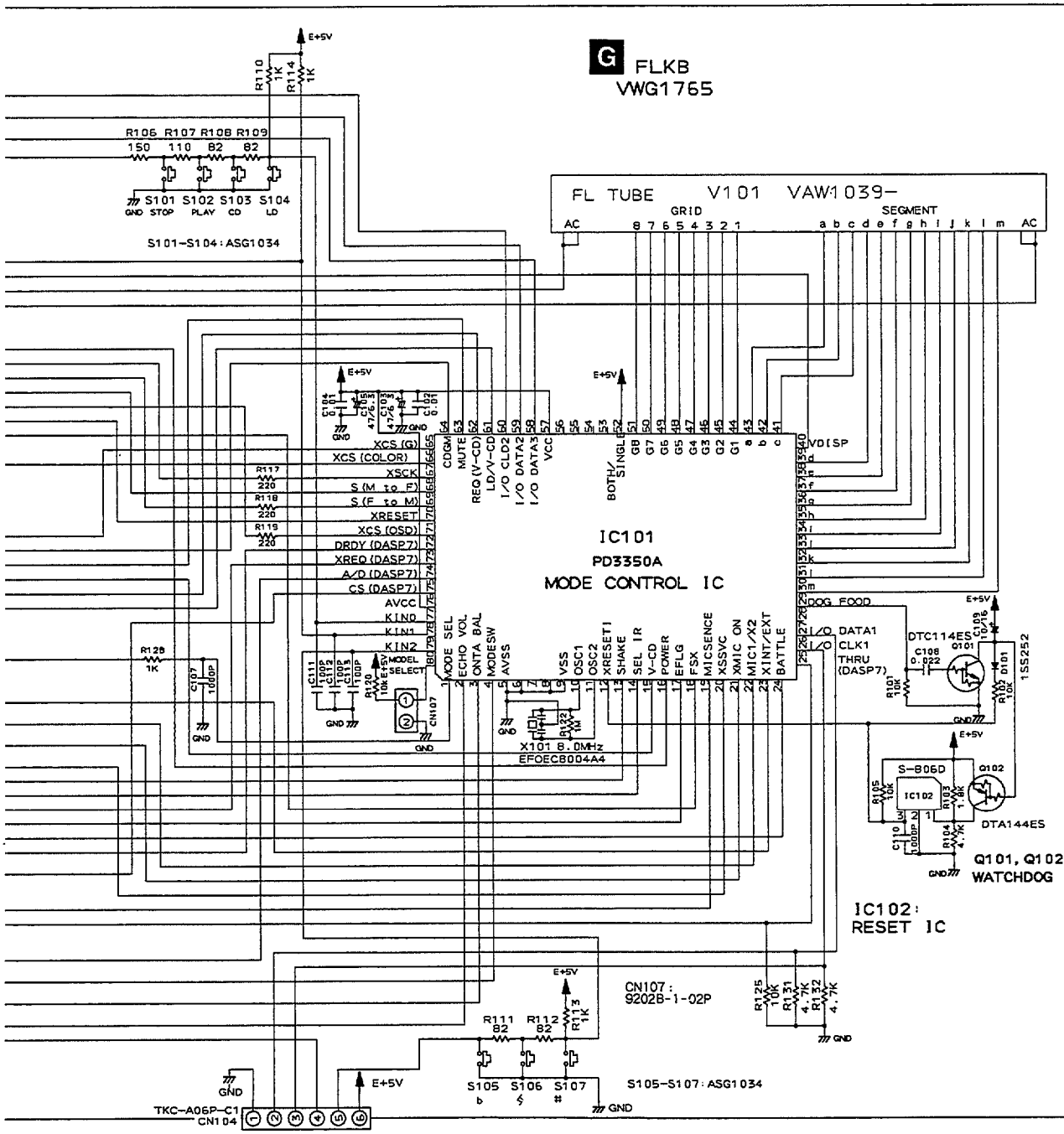
G FLKB
VWG1765
FL TUBE V101 VAW1039-
GRID
SEGMENT
S101-S104:ASG1034
IC101
PD3350A
MODE CONTROL IC
X101 8.0MHz
EFOEC8004A4
IC102:
RESET IC
Q101, Q102:
WATCHDOG
CN107:
9202B-1-02P
S105-S107:ASG1034
TKC-A06P-C1
CN104

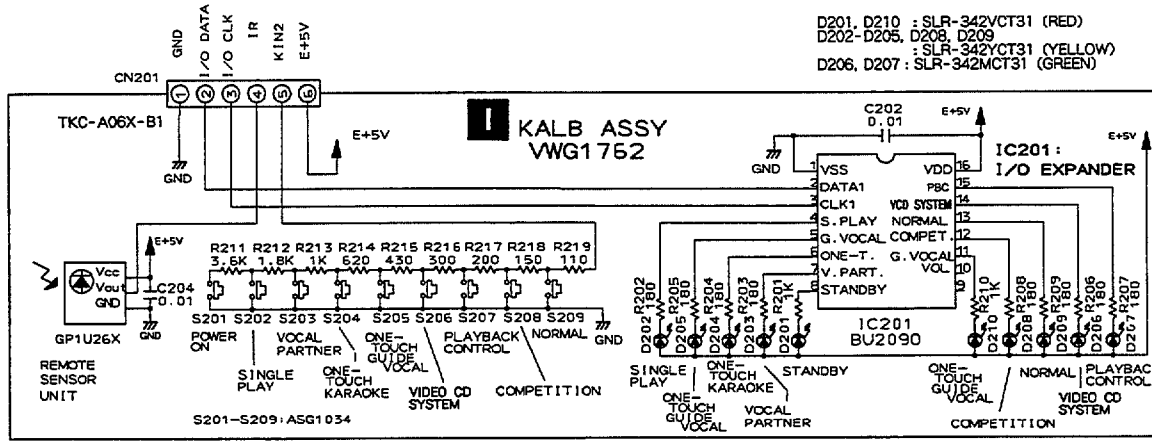
D201, D210 : SLR-342VCT31 (RED)
D202-D205, D208, D209
: SLR-342YCT31 (YELLOW)
D206, D207 : SLR-342MCT31 (GREEN)
I KALB ASSY
VWG1752
TKC-A06X-B1
CN201
IC201:
I/O EXPANDER
IC201
BU2090
GP1U26X
REMOTE
SENSOR
UNIT
S201-S209:ASG1034

3.4 MOTHER ASSY(1/2)

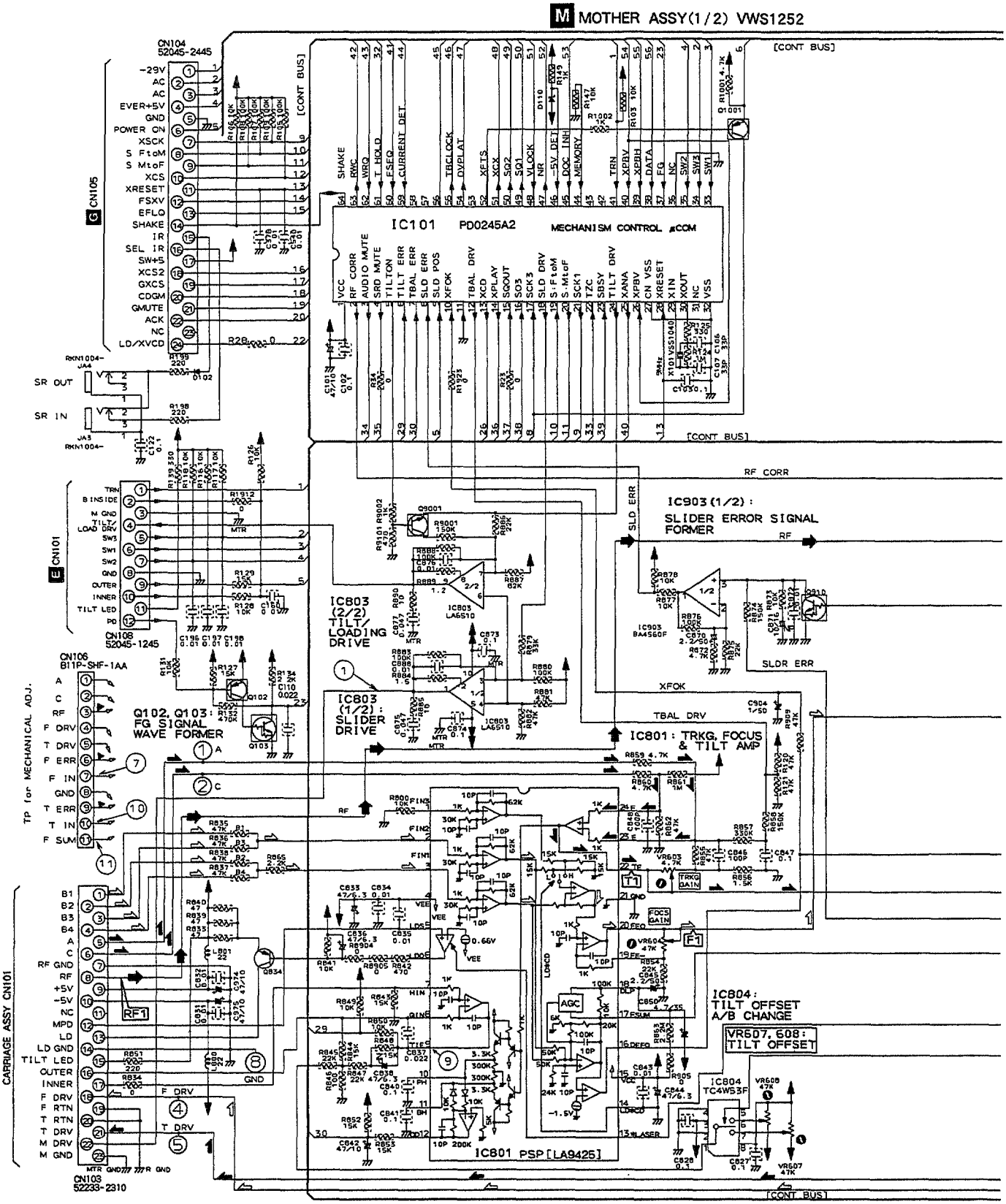

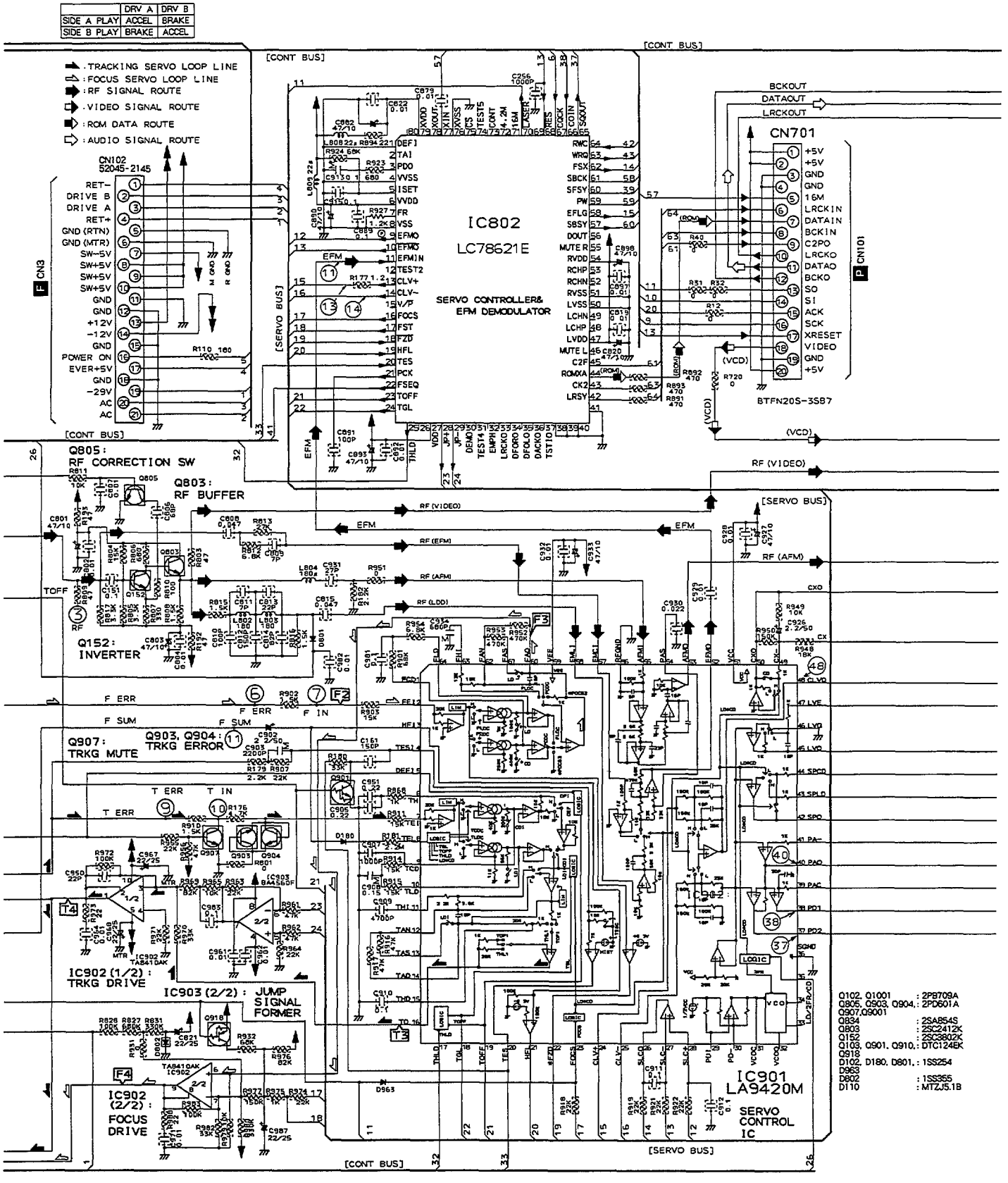
DRV A DRV B
SIDE A PLAY ACCEL BRAKE
SIDE B PLAY BRAKE ACCEL
: TRACKING SERVO LOOP LINE
: FOCUS SERVO LOOP LINE
: RF SIGNAL ROUTE
: VIDEO SIGNAL ROUTE
: ROM DATA ROUTE
: AUDIO SIGNAL ROUTE
CN102
52045-2145
F CN3
[CONT BUS]
[SERVO BUS]
IC802
LC78621E
SERVO CONTROLLER& EFM DEMODULATOR
CN701
P CN101
BTFN20S-3SB7
BCKOUT
DATAOUT
LRCKOUT
Q805: RF CORRECTION SW
Q803: RF BUFFER
Q152: INVERTER
Q907: TRKG MUTE
Q903, Q904: TRKG ERROR
IC902 (1/2): TRKG DRIVE
IC903 (2/2): JUMP SIGNAL FORMER
IC902 (2/2): FOCUS DRIVE
IC901 LA9420M SERVO CONTROL IC
RF (VIDEO)
RF (EFM)
RF (AFM)
RF (LDD)
EFM
TOFF
F ERR
F SUM
T ERR
T IN
F IN
Q102, Q1001 : 2PB709A
Q805, Q903, Q904, Q907,Q9001 : 2PD601A
Q834 : 2SA854S
Q803 : 2SC2412K
Q152 : 2SC3802K
Q103, Q901, Q910, Q918 : DTC124EK
D102, D180, D801, D963 : 1SS254
D802 : 1SS355
D110 : MTZJ5.1B

3.5 MOTHER ASSY(2/2)

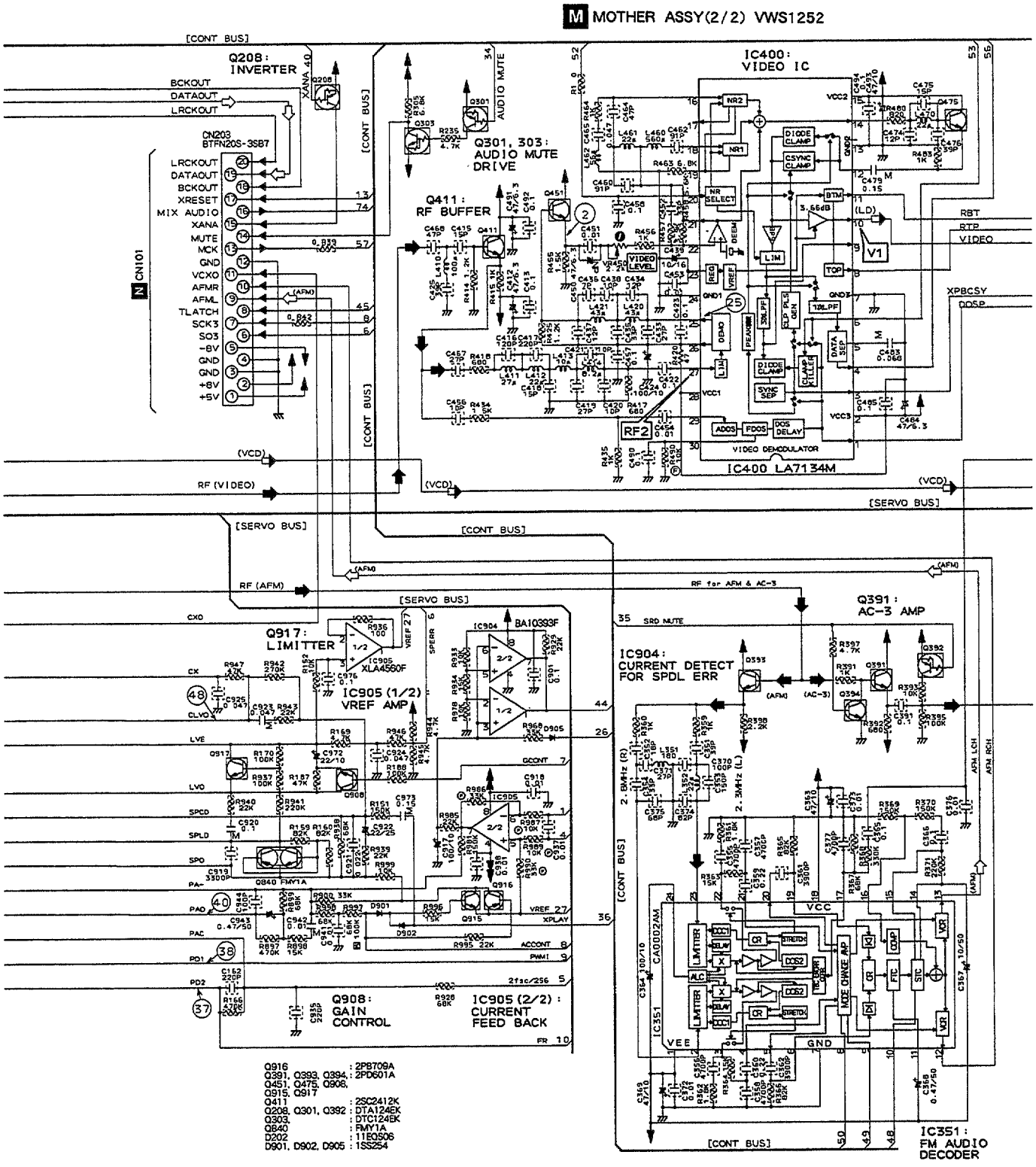

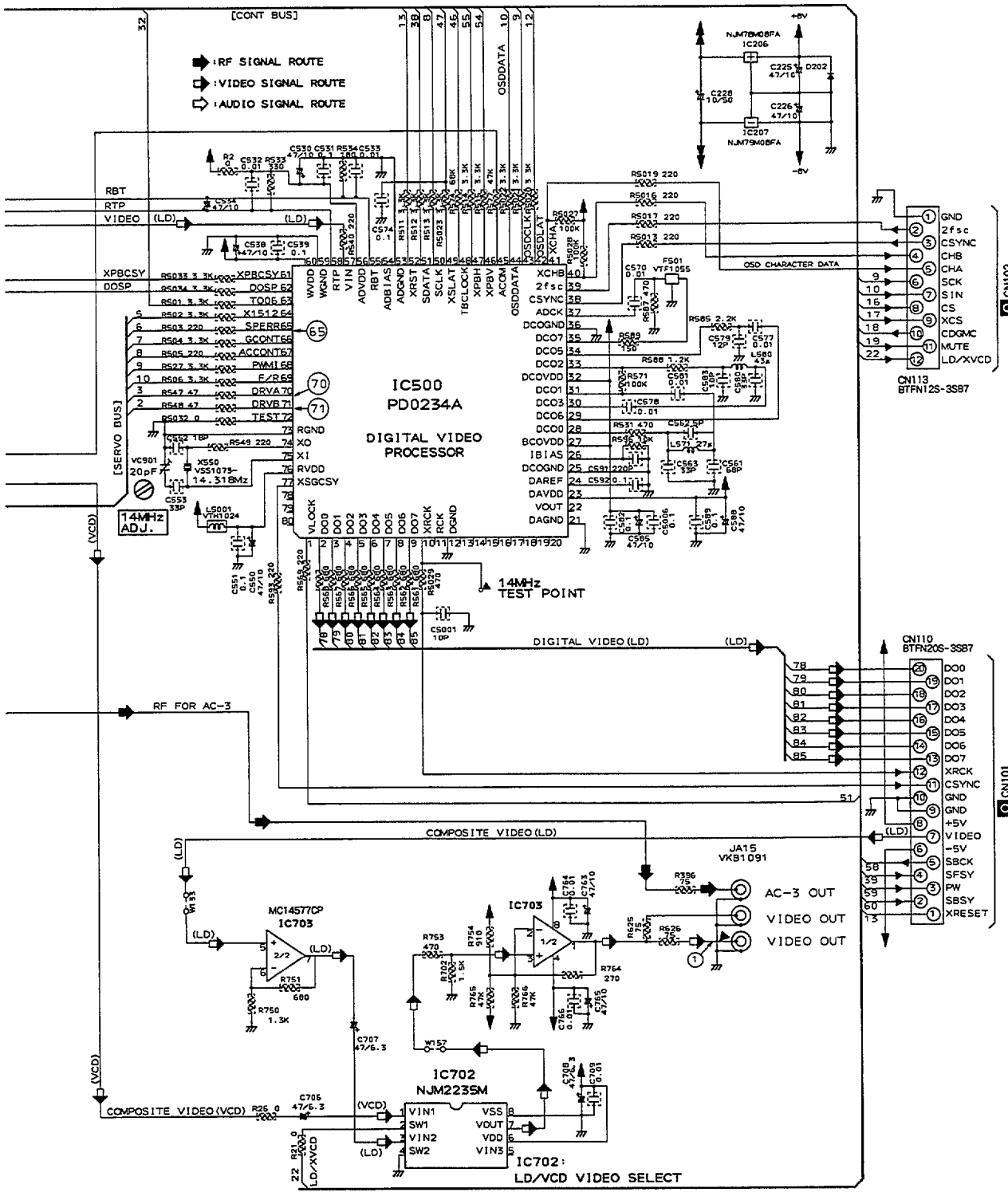
[CONT BUS]
:RF SIGNAL ROUTE
:VIDEO SIGNAL ROUTE
:AUDIO SIGNAL ROUTE
OSDDATA
NJM78M08FA
IC206
NJM79M08FA
IC207
+8V
-8V
RBT
RTP
VIDEO
(LD)
XPBCSY
DOSP
[SERVO BUS]
IC500
PD0234A
DIGITAL VIDEO
PROCESSOR
XPBCSY61
DOSP 62
TQ06 63
X15 1264
SPERR65
GCONT66
ACCONT67
PWM168
F/R69
DRVA70
DRVB71
TEST 72
RGND
XO
XI
RVDD
XSGCSY
VLOCK
DO0
DO1
DO2
DO3
DO4
DO5
DO6
DO7
XRCK
RCK
DGND
WVDD
WGND
RTP
VIN
ADVDD
RBT
ADBIAS
ADGND
XRST
SDATA
SCLK
XSLAT
TBCLOCK
XPBH
XPBV
ACOM
OSDDATA
OSDCLK
OSDLAT
XCHA
XCHB
2fsc
CSYNC
ADCK
DCOGND
DCO7
DCO5
DCO2
DCOVDD
DCO1
DCO3
DCO6
DCO0
BCOVDD
IBIAS
DCOGND
DAREF
DAVDD
VOUT
DAGND
OSD CHARACTER DATA
F501
VTF1055
CN102
CN113
BTFN12S-3S87
GND
2fsc
CSYNC
CHB
CHA
SCK
SIN
CS
XCS
CDGMC
MUTE
LD/XVCD
14MHz
ADJ.
14MHz
TEST POINT
DIGITAL VIDEO (LD)
CN110
BTFN20S-3S87
RF FOR AC-3
COMPOSITE VIDEO (LD)
CN101
+5V
VIDEO
-5V
SBCK
SFSY
PW
SBSY
XRESET
JA15
VKB1091
AC-3 OUT
VIDEO OUT
VIDEO OUT
MC14577CP
IC703
IC703
IC702
NJM2235M
VIN1
SW1
VIN2
SW2
VSS
VOUT
VDD
VIN3
COMPOSITE VIDEO (VCD)
IC702:
LD/VCD VIDEO SELECT

WAVEFORMS AND VOLTAGE

MOTHER ASSY

Note : (No.) in the table correspond to the pin number.

Measurement condition : In case when (D. audio) is written, at time when disc that has digital audio recording is played.

MOTHER ASSY

IC801 (LA9425)	IC901 (LA9420M)	CN106	Q451 Emitter	IC400 (LA7134M)	IC500 (PD0234A)
T1(22) 5ms/div 200mVp-p 0V DC mode	T3(16) 5ms/div 500mVp-p 0V DC mode	(7) (F2) 5ms/div 200mVp-p 0V DC mode	(2) 10μs/div 400mVp-p AC mode	V1(10) 10μs/div 1.6Vp-p 0V DC mode	
F1(20) 5ms/div 100mVp-p 0V DC mode	F3(60) 5ms/div 1Vp-p 0V DC mode	(10) 5ms/div 100mVp-p 0V DC mode	JA14 VIDEO OUT (1) 10μs/div 1Vp-p (75Ω termination) 0V DC mode	RF2(27) 2ms/div 400mVp-p AC mode	(65) 5ms/div 5Vp-p 0V DC mode
(9) 10ms/div 0.2Vp-p 0V DC mode	(38) 10μs/div 5Vp-p 0V (37) 0V DC mode	(11) 5ms/div 0V 0.2Vp-p DC mode		(25) 10μs/div 1Vp-p 0V DC mode	(71) 10μs/div 5Vp-p 0V (70) 0V DC mode
IC802 (LC78621E)	(40) 10ms/div 0.3Vp-p 0V DC mode	CN103			
(11) 0.5μs/div 1.6Vp-p 0V DC mode		RF1(8) 2ms/div 600mVp-p AC mode			
(13) 50μs/div 5Vp-p 0V (14) 0V DC mode	(48) 50μs/div 1Vp-p 0V DC mode				
	IC902 (TA8410AK)				
	T4(1) 5ms/div 2Vp-p 0V DC mode				
IC803 (LA6510)	F4(9) 5ms/div				
(1) 2ms/div 1.8Vp-p 0V DC mode	5Vp-p 0V DC mode				

• The Inside Block Diagram of IC901 (LA9420M)

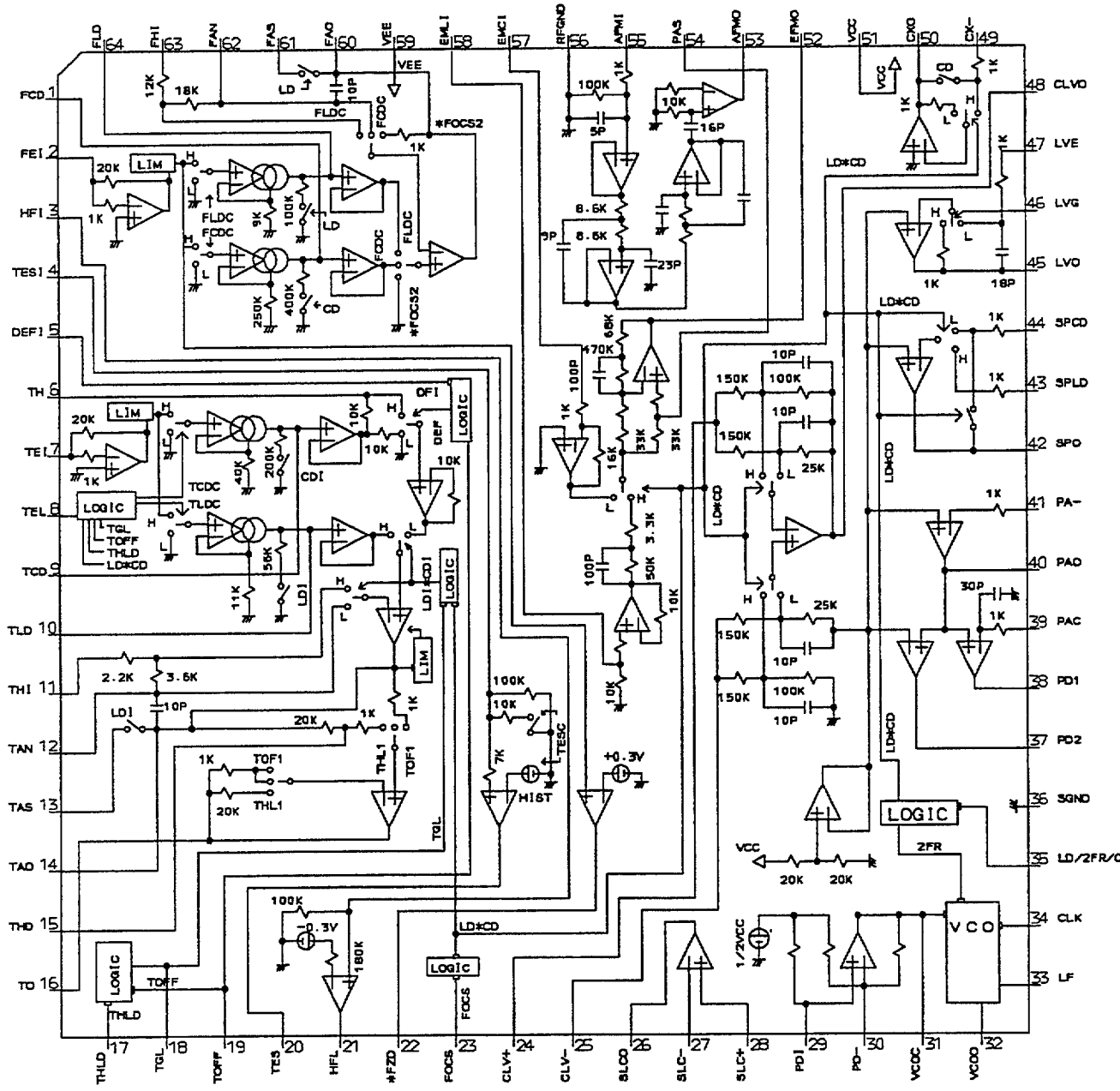

3.6 KRAB ASSY

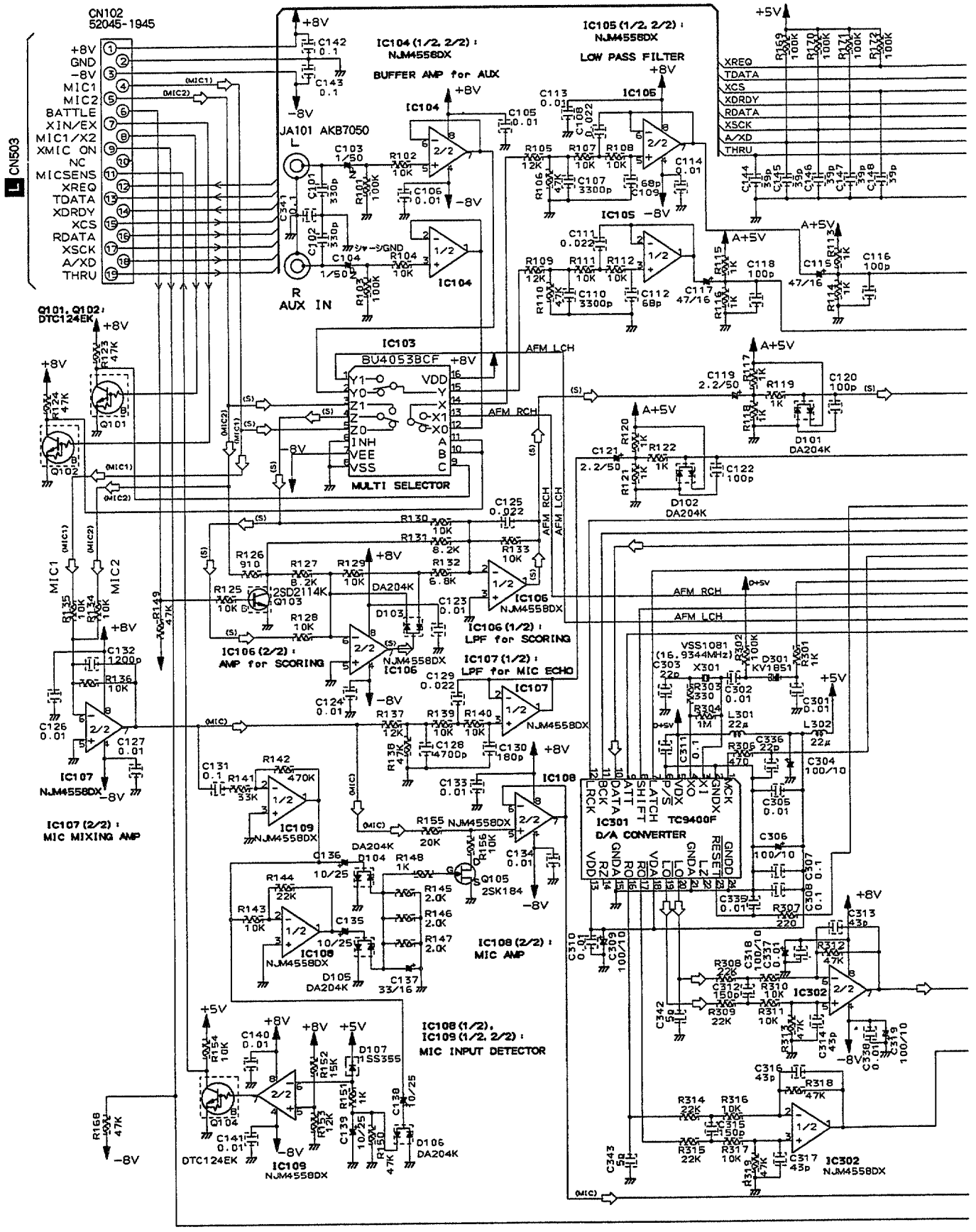
CN102
52045-1945
CN503
+8V
GND
-8V
MIC1
MIC2
BATTLE
XIN/EX
MIC1/X2
XMIC ON
NC
MICSENS
XREQ
TDATA
XDRDY
XCS
RDATA
XSCK
A/XD
THRU
JA101 AKB7050
R AUX IN
IC104 (1/2, 2/2) : NJM4558DX
BUFFER AMP for AUX
IC105 (1/2, 2/2) : NJM4558DX
LOW PASS FILTER
IC103
BU4053BCF
MULTI SELECTOR
AFM LCH
AFM RCH
Q101, Q102 : DTC124EK
D101 DA204K
D102 DA204K
Q103 2SD2114K
IC106 (2/2) : AMP for SCORING
IC106 (1/2) : LPF for SCORING
IC107 (1/2) : LPF for MIC ECHO
IC107 (2/2) : MIC MIXING AMP
IC108 (2/2) : MIC AMP
IC108 (1/2), IC109 (1/2, 2/2) : MIC INPUT DETECTOR
Q105 2SK184
D103 DA204K
D104 DA204K
D105 DA204K
D106 DA204K
D107 1SS355
IC301 TC9400F D/A CONVERTER
IC302 NJM4558DX
VSS1081 (16.9344MHz)
X301
D301 KV1851
Q104 DTC124EK

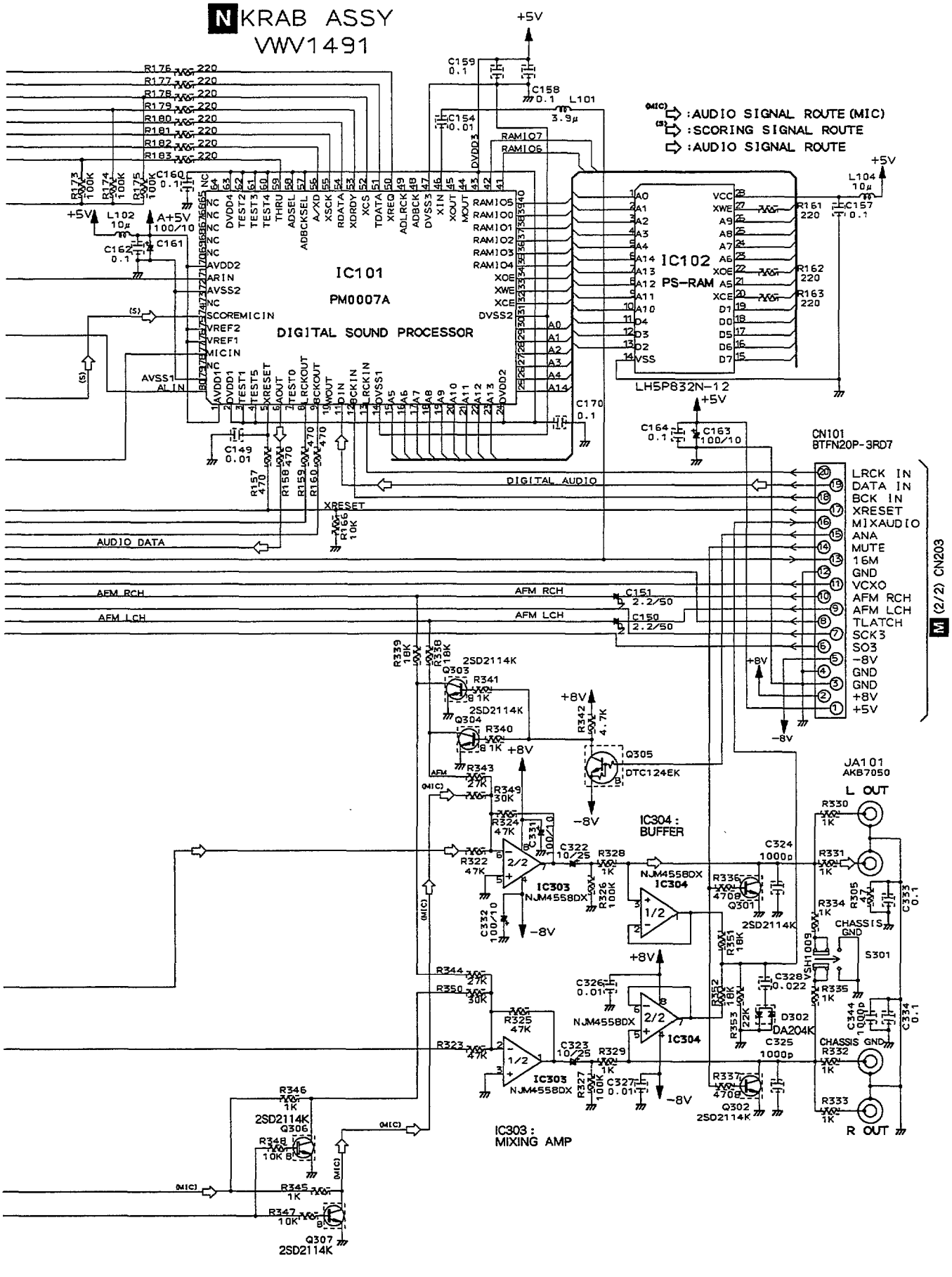
N KRAB ASSY
VWV1491
:AUDIO SIGNAL ROUTE (MIC)
:SCORING SIGNAL ROUTE
:AUDIO SIGNAL ROUTE
IC101
PM0007A
DIGITAL SOUND PROCESSOR
IC102
PS-RAM
LH5P832N-12
CN101
BTFN20P-3RD7
M (2/2) CN203
LRCK IN
DATA IN
BCK IN
XRESET
MIXAUDIO
ANA
MUTE
16M
GND
VCXO
AFM RCH
AFM LCH
TLATCH
SCK3
SO3
-8V
GND
GND
+8V
+5V
DIGITAL AUDIO
AUDIO DATA
XRESET
AFM RCH
AFM LCH
IC304 : BUFFER
IC303 : MIXING AMP
JA101
AKB7050
L OUT
R OUT
CHASSIS GND
S301
D302
DA204K
Q301
Q302
Q303
Q304
Q305
Q306
Q307
2SD2114K
DTC124EK
NJM4558DX

3.7 GRPB ASSY

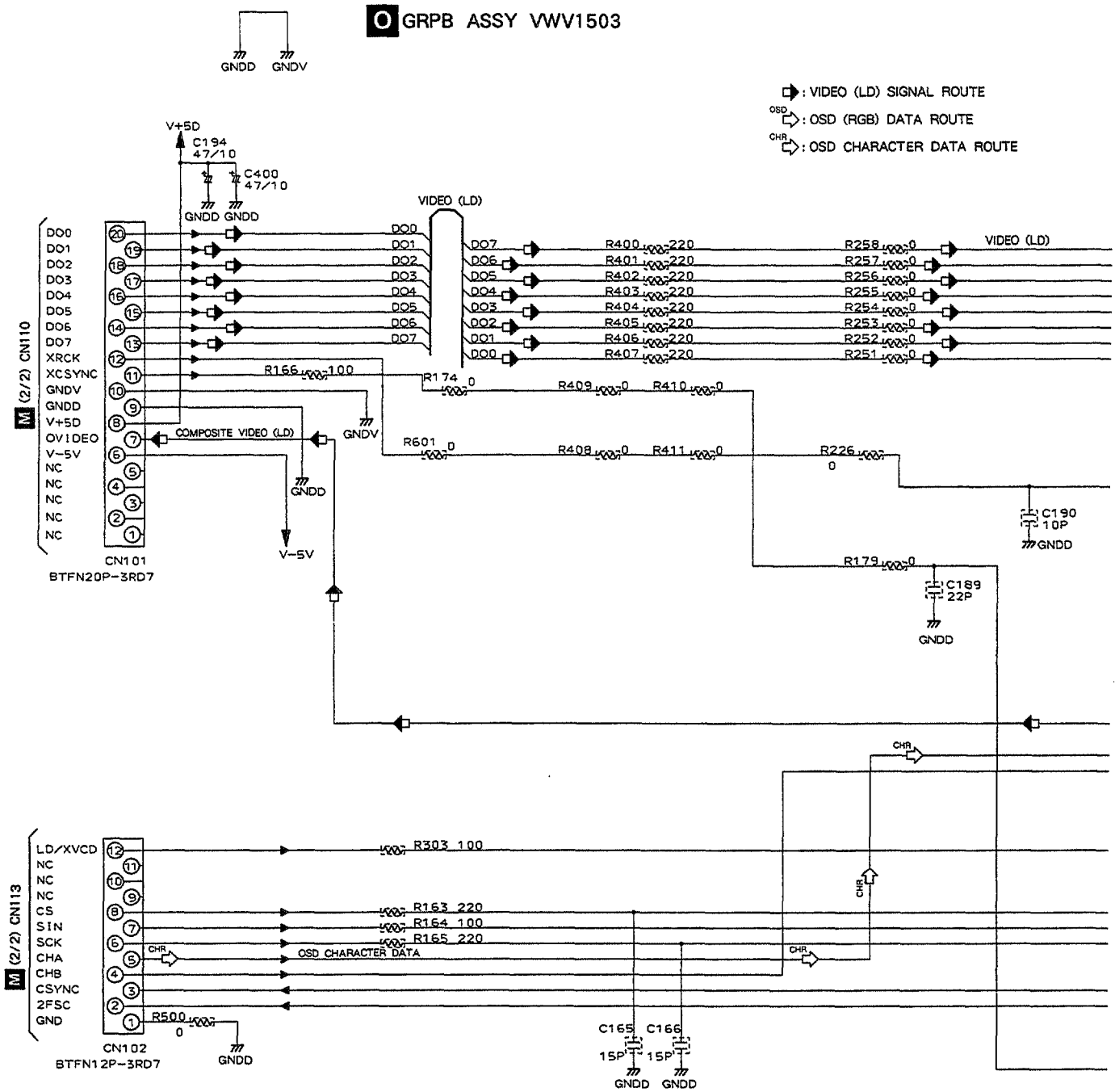
O GRPB ASSY VWV1503
GNDD GNDV
: VIDEO (LD) SIGNAL ROUTE
OSD : OSD (RGB) DATA ROUTE
CHR : OSD CHARACTER DATA ROUTE
V+5D
C194 47/10
C400 47/10
GNDD GNDD
VIDEO (LD)
M (2/2) CN110
DO0
DO1
DO2
DO3
DO4
DO5
DO6
DO7
XRCK
XCSYNC
GNDV
GNDD
V+5D
OVIDEO
V-5V
NC
NC
NC
NC
NC
CN101
BTFN20P-3RD7
COMPOSITE VIDEO (LD)
R166 100
R174 0
R400 220
R401 220
R402 220
R403 220
R404 220
R405 220
R406 220
R407 220
R258 0
R257 0
R256 0
R255 0
R254 0
R253 0
R252 0
R251 0
VIDEO (LD)
R409 0
R410 0
R601 0
R408 0
R411 0
R226 0
C190 10P
R179 0
C189 22P
V-5V
M (2/2) CN113
LD/XVCD
CS
SIN
SCK
CHA
CHB
CSYNC
2FSC
GND
R303 100
R163 220
R164 100
R165 220
OSD CHARACTER DATA
R500 0
CN102
BTFN12P-3RD7
C165 15P
C166 15P

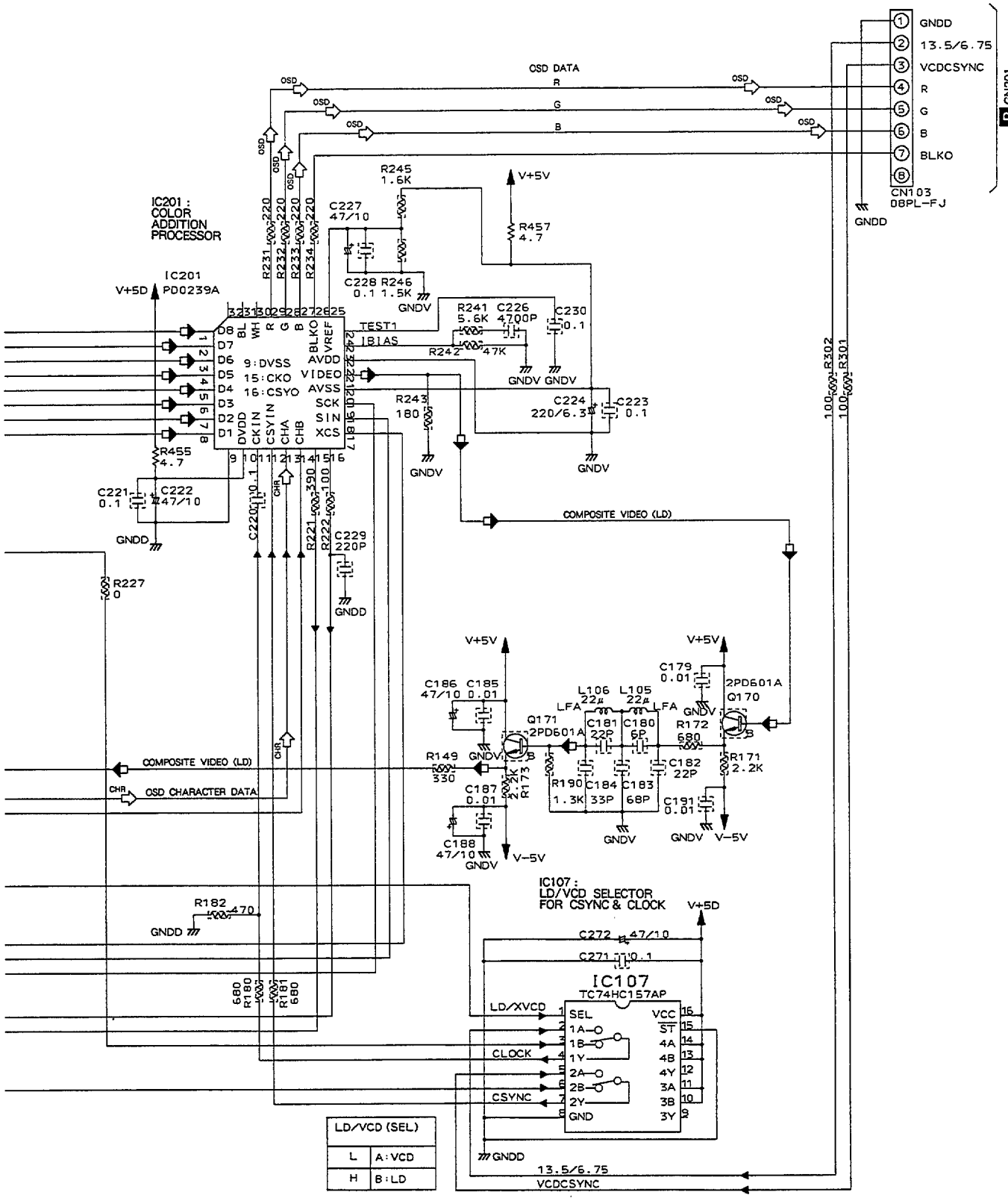
CN103
08PL-FJ
GNDD
13.5/6.75
VCDCSYNC
R
G
B
BLKO
OSD DATA
IC201 :
COLOR
ADDITION
PROCESSOR
IC201
PD0239A
V+5D
V+5V
R245
1.6K
R457
4.7
C227
47/10
C228 R246
0.1 1.5K
GNDV
R241 C226
5.6K 4700P
C230
0.1
R242
47K
TEST1
IBIAS
GNDV GNDV
C224
220/6.3
C223
0.1
R243
180
R455
4.7
C221
0.1
C222
47/10
C220
0.1
R221
390
R222
100
C229
220P
R227
0
R302
100
R301
100
COMPOSITE VIDEO (LD)
CHR
OSD CHARACTER DATA
C186 C185
47/10 0.01
L106 L105
22μ 22μ
LFA
C181 C180
22P 6P
C179
0.01
2PD601A
Q170
Q171
2PD601A
R172
680
R149
330
R173
2.2K
R171
2.2K
R190
1.3K
C184 C183
33P 68P
C182
22P
C187
0.01
C191
0.01
C188
47/10
V-5V
R182
470
R180
680
R181
680
IC107 :
LD/VCD SELECTOR
FOR CSYNC & CLOCK
C272
47/10
C271
0.1
IC107
TC74HC157AP
LD/XVCD
CLOCK
CSYNC
SEL
1A
1B
1Y
2A
2B
2Y
GND
VCC
ST
4A
4B
4Y
3A
3B
3Y
LD/VCD (SEL)
L
A:VCD
H
B:LD

3.8 VCDB ASSY

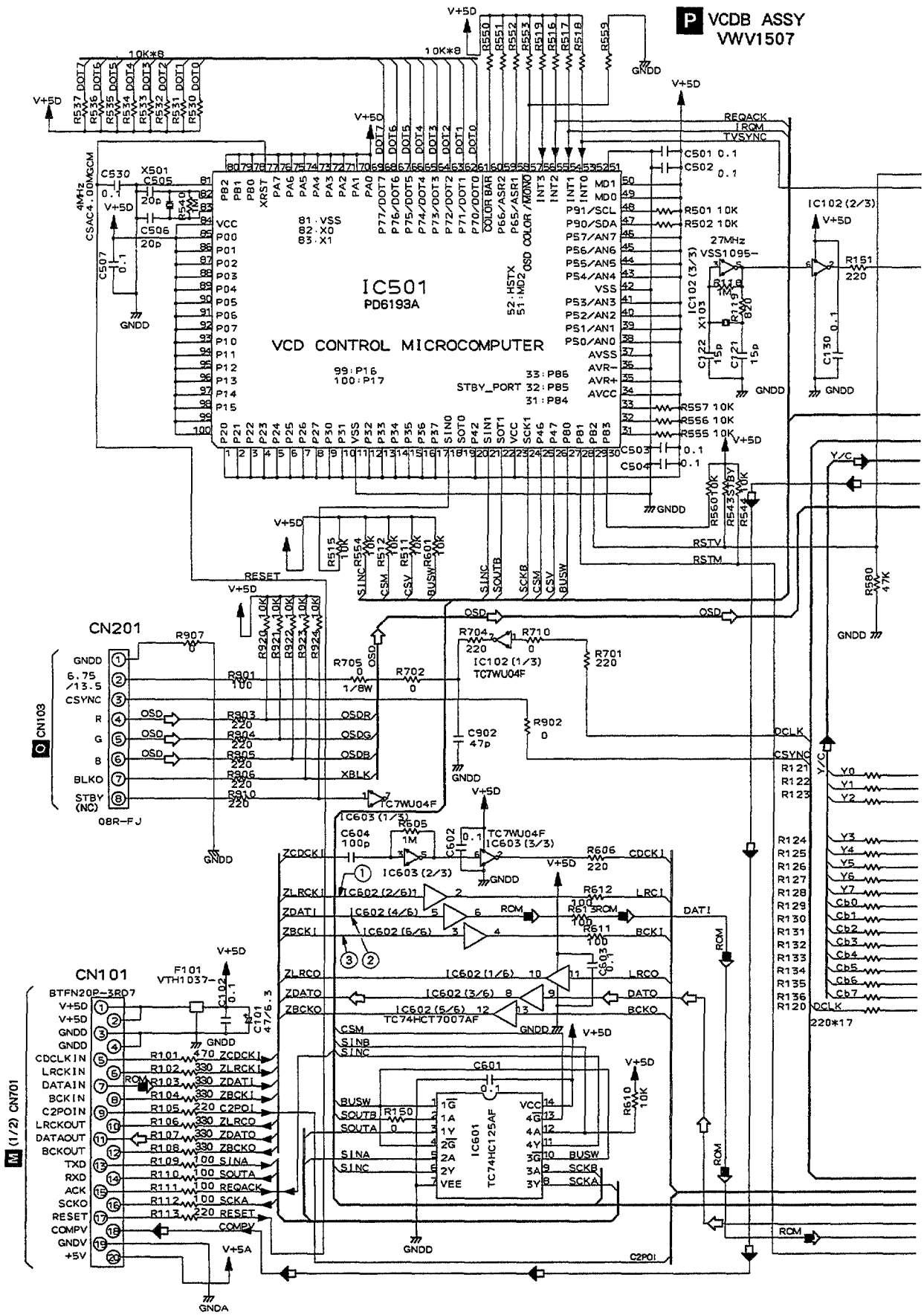
P VCDB ASSY
VWV1507
IC501
PD6193A
VCD CONTROL MICROCOMPUTER
CN201
CN101
CN103
M (1/2) CN701
IC601
TC74HC125AF
IC102 (1/3)
TC7WU04F
IC603 (1/3)
IC603 (2/3)
IC603 (3/3)
IC602 (1/6)
IC602 (2/6)
IC602 (3/6)
IC602 (4/6)
IC602 (5/6)
IC602 (6/6)
TC74HCT7007AF
IC102 (2/3)
IC102 (3/3)
VSS1095-
27MHz
X103
X501
4MHz
CSAC4.00MGCM
F101
VTH1037-
BTFN20P-3RD7
08R-FJ
STBY_PORT
GNDD
GNDA
V+5D
V+5A
RESET
REQACK
IRQM
TVSYNC
RSTV
RSTM
OSD
ROM
DCLK
CSYNC
Y/C
220*17

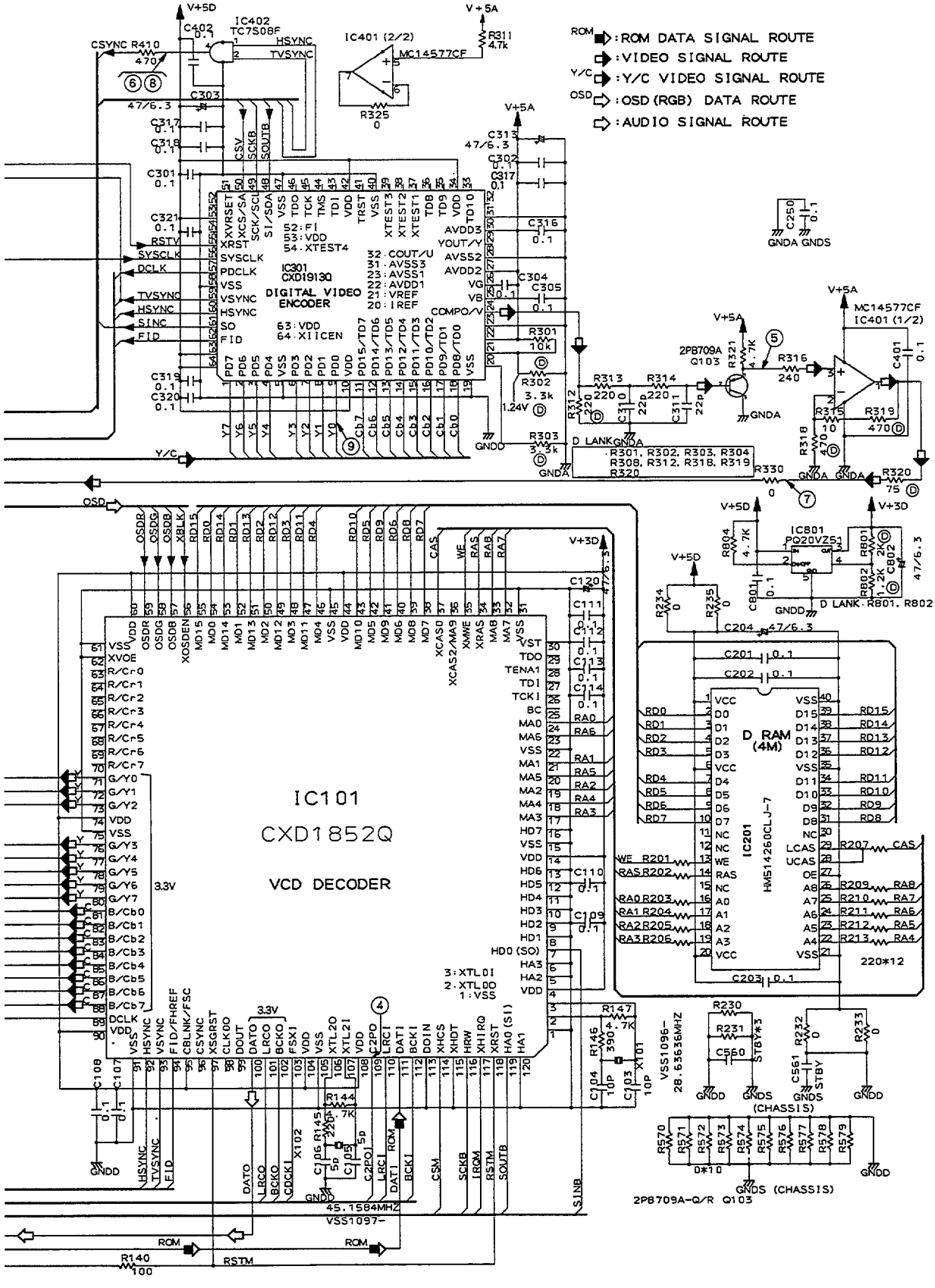
ROM :ROM DATA SIGNAL ROUTE
:VIDEO SIGNAL ROUTE
Y/C :Y/C VIDEO SIGNAL ROUTE
OSD :OSD (RGB) DATA ROUTE
:AUDIO SIGNAL ROUTE
IC101
CXD1852Q
VCD DECODER
IC301
CXD1913Q
DIGITAL VIDEO ENCODER
IC402
TC7S08F
IC401 (2/2)
MC14577CF
D RAM (4M)
IC201
HM514260CLJ-7
IC801
PQ20VZ51
2PB709A Q103
45.1584MHZ
VSS1097-
VSS1096-
28.63636MHZ
(CHASSIS)

VCDB ASSY WAVEFORMS

Note : (No.) in the table correspond to the number.

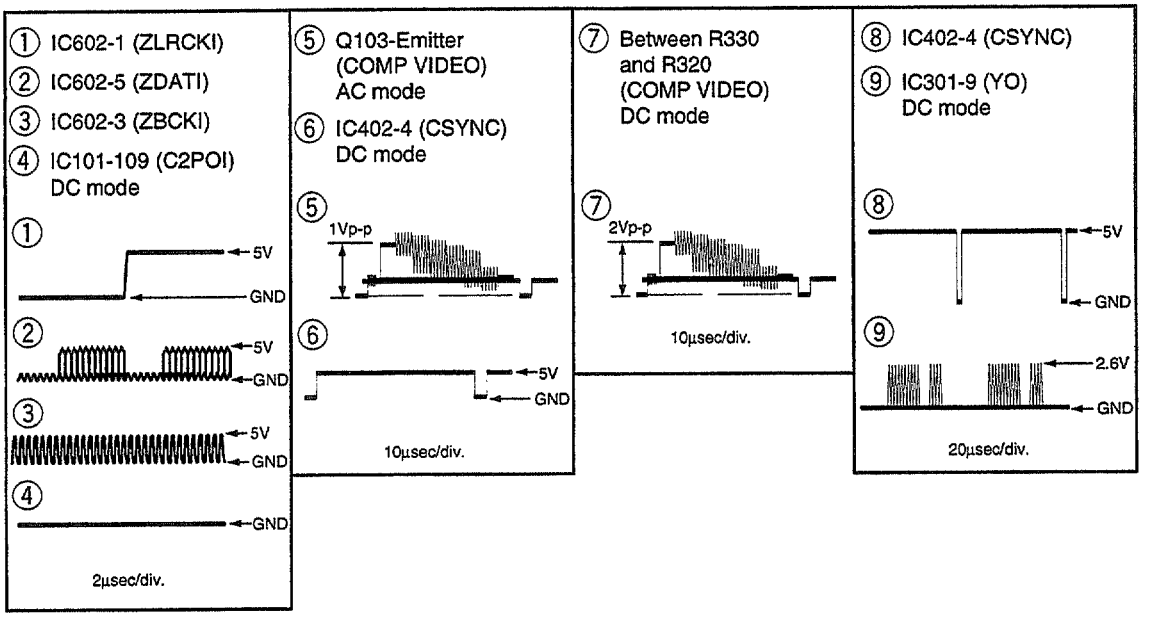

4. PCB CONNECTION DIAGRAMS

4.1 PKSB, FG, TNSB, BISB AND LMSB ASSEMBLIES

NOTE FOR PCB DIAGRAMS:

1. Part numbers in PCB diagrams match those in the schematic diagrams.
2. A comparison between the main parts of PCB and schematic diagrams is shown below.
3. The parts mounted on this PCB include all necessary parts for several destinations.
   For further information for respective destinations, be sure to check with the schematic diagram.

Symbol in PCB Diagrams	Symbol in Schematic Diagrams	Part Name
B C E	B C E B C E	Transistor
B C E	B C E B C E	Transistor with resistor
D G S	D G S D G S	Field effect transistor
		Resistor array
		3-terminal regulator

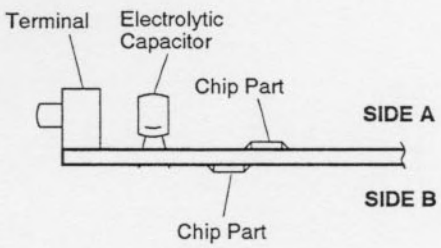

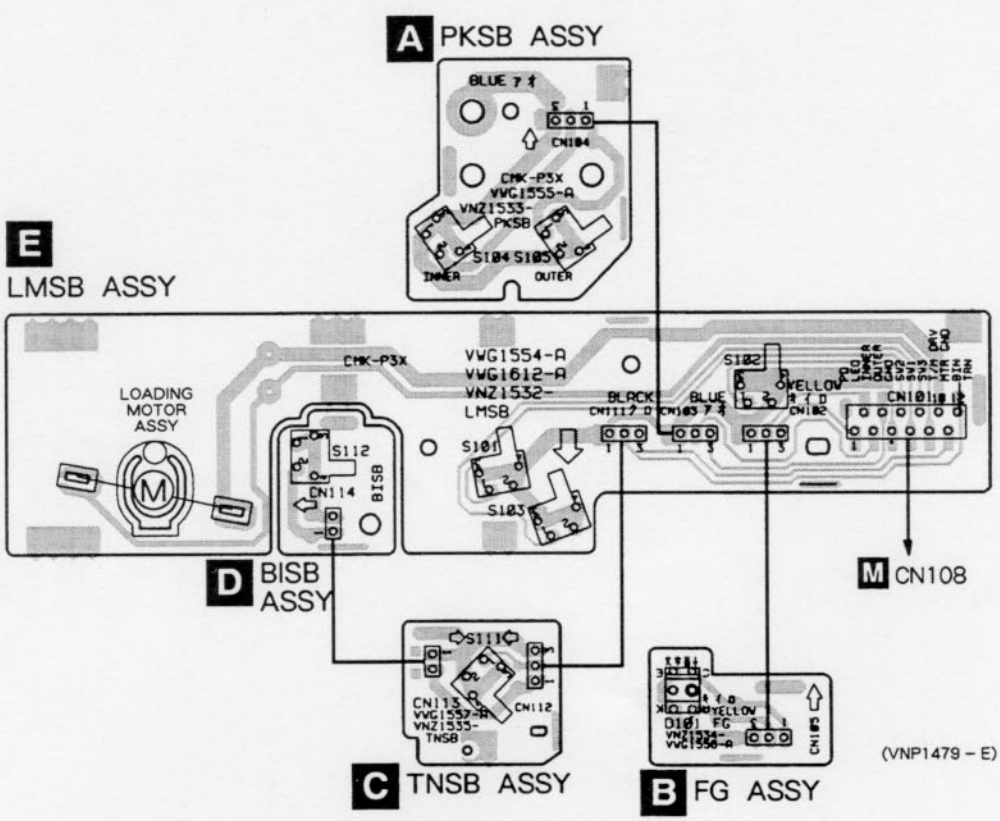

SIDE A

4.2 POWER SUPPLY ASSY

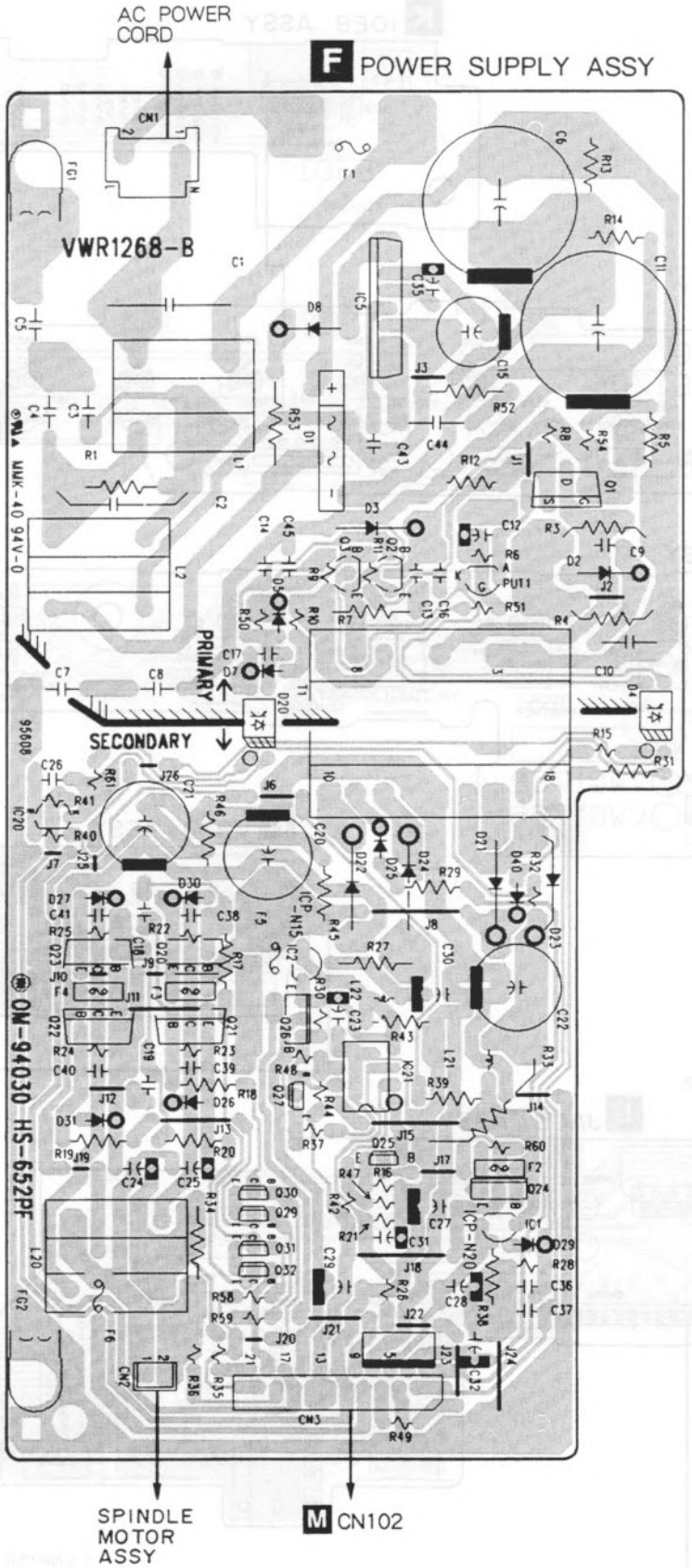

SIDE A

4.3 FLKB, VRSB, KALB, DIKB, IOEB AND JACB ASSEMBLIES

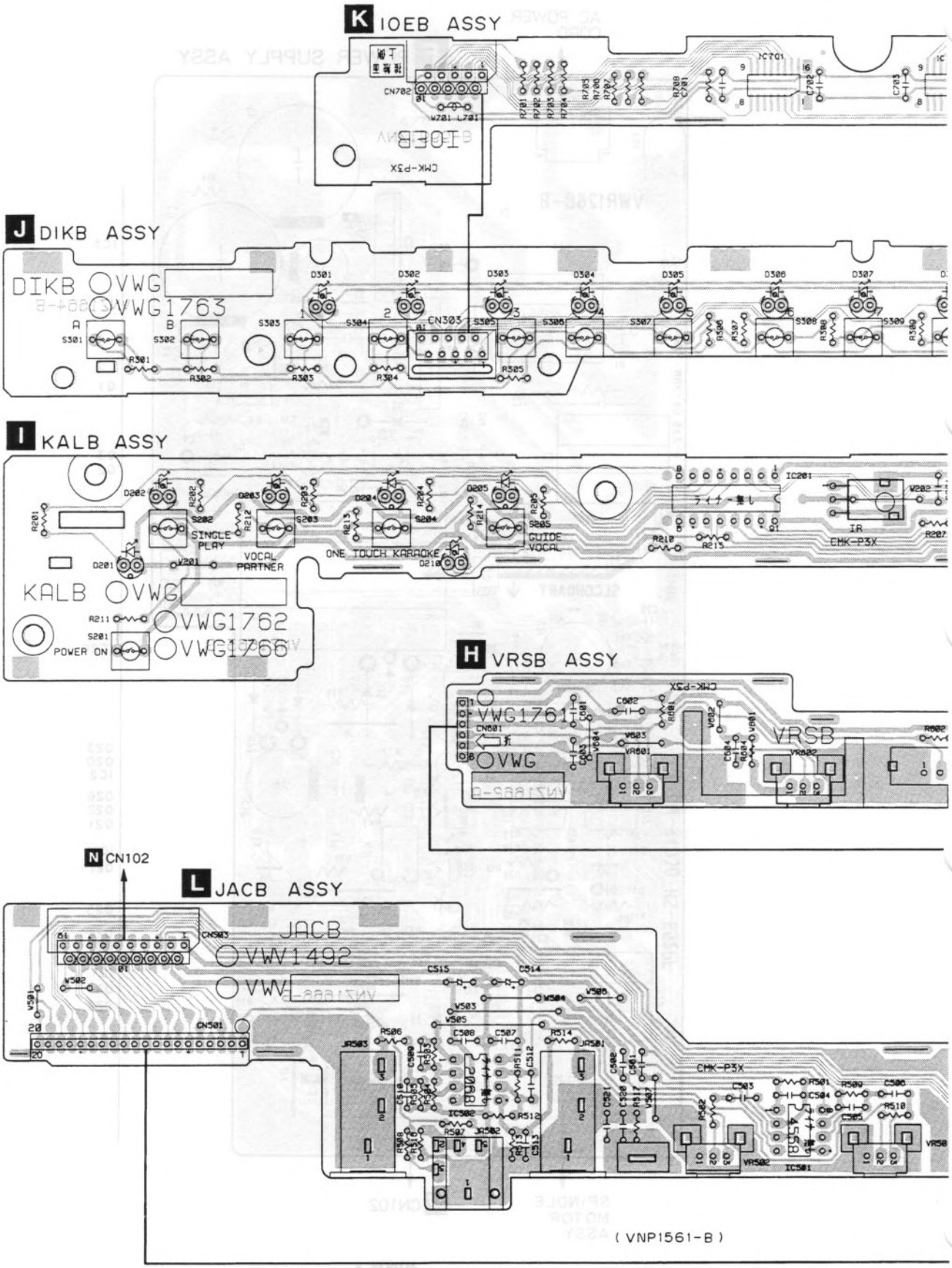

SIDE A

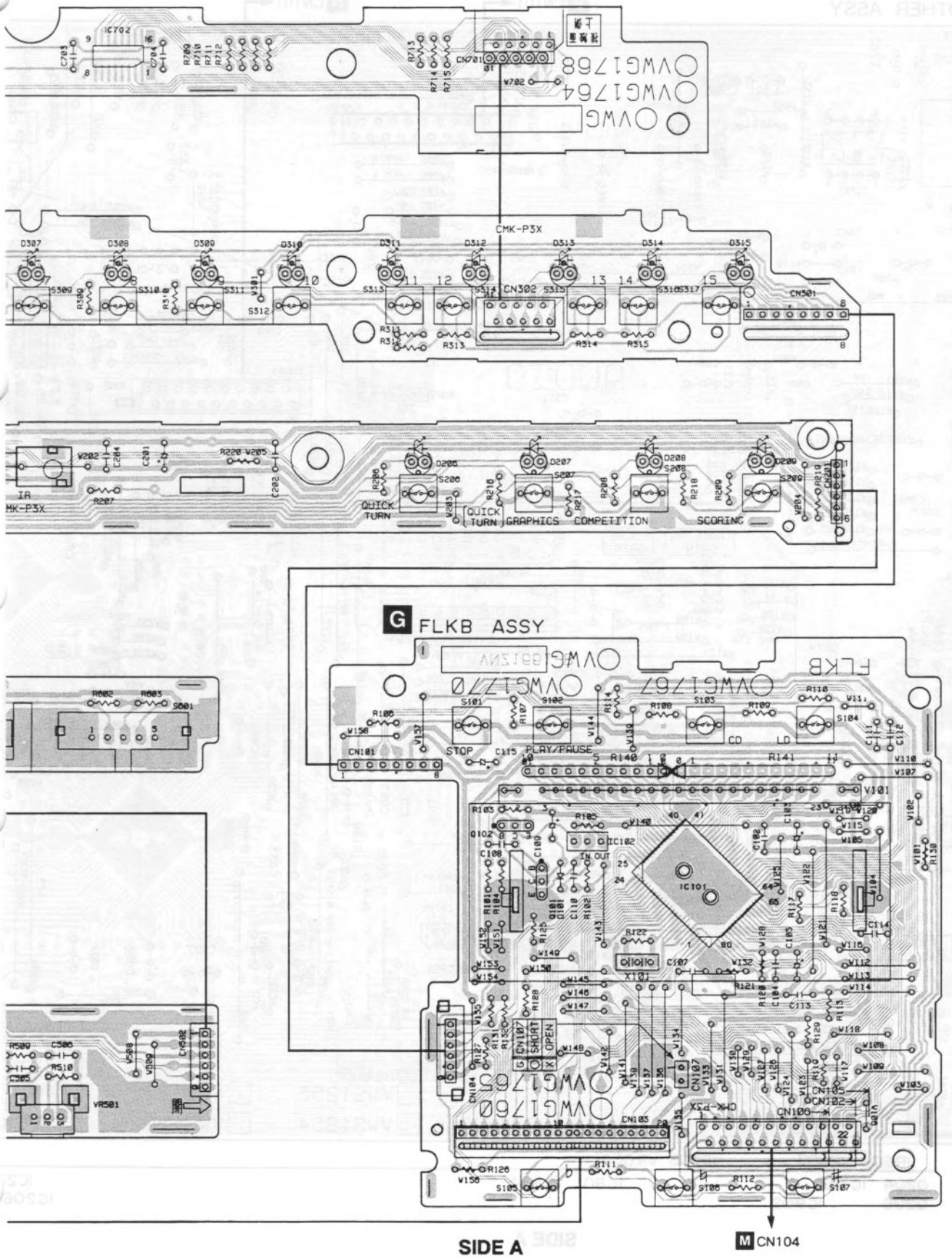
CMK-P3X
IR
MK-P3X
QUICK TURN
QUICK TURN
GRAPHICS
COMPETITION
SCORING
G FLKB ASSY
STOP
PLAY/PAUSE
CD
LD
SHORT
OPEN
CMK-P3X
M CN104
SIDE A

4.4 MOTHER ASSY

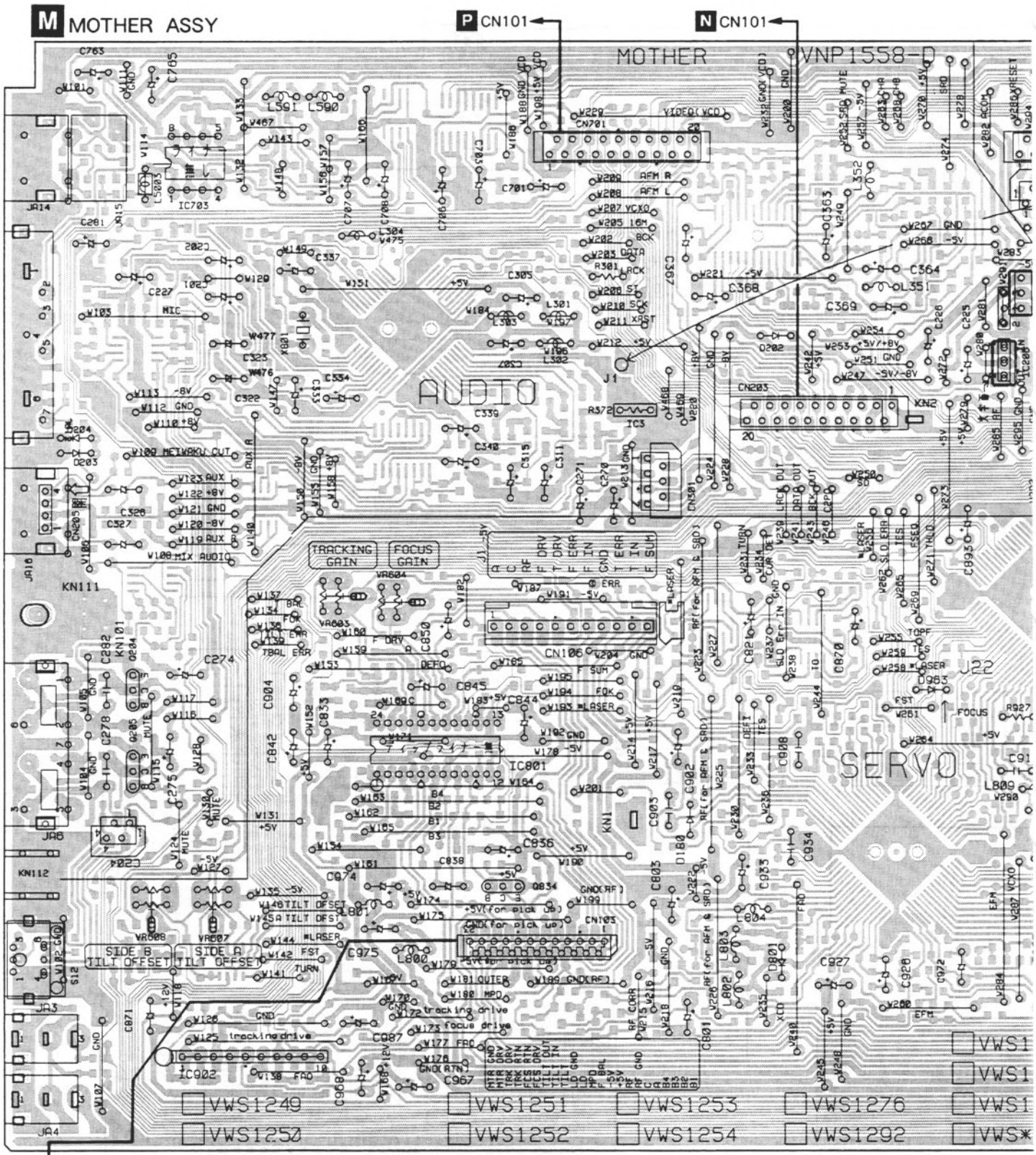

CARRIAGE ASSY CN101

VR608 VR607 VR603 VR604
Q204 IC703 IC801 Q834 IC2(
Q205 IC902 IC206

SIDE A

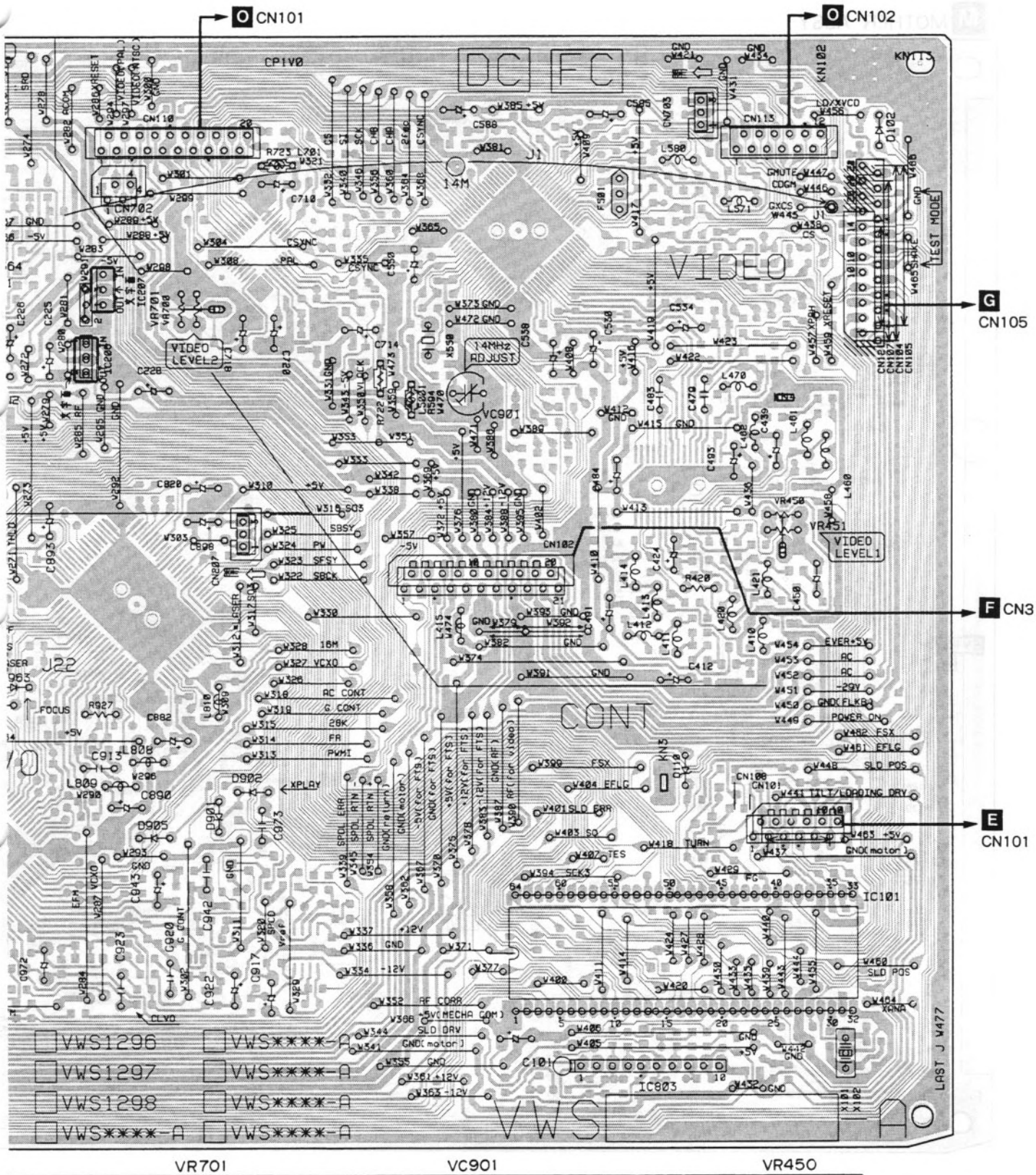
O CN101
O CN102
G CN105
F CN3
E CN101
VR701
VC901
VR450
IC207
IC206
IC101
IC803
SIDE A
VWS1296
VWS1297
VWS1298
VWS****-A
VIDEO
CONT
DC
FC
VIDEO LEVEL2
VIDEO LEVEL1
14MHz ADJUST
TEST MODE
LAST J W477

M MOTHER ASSY

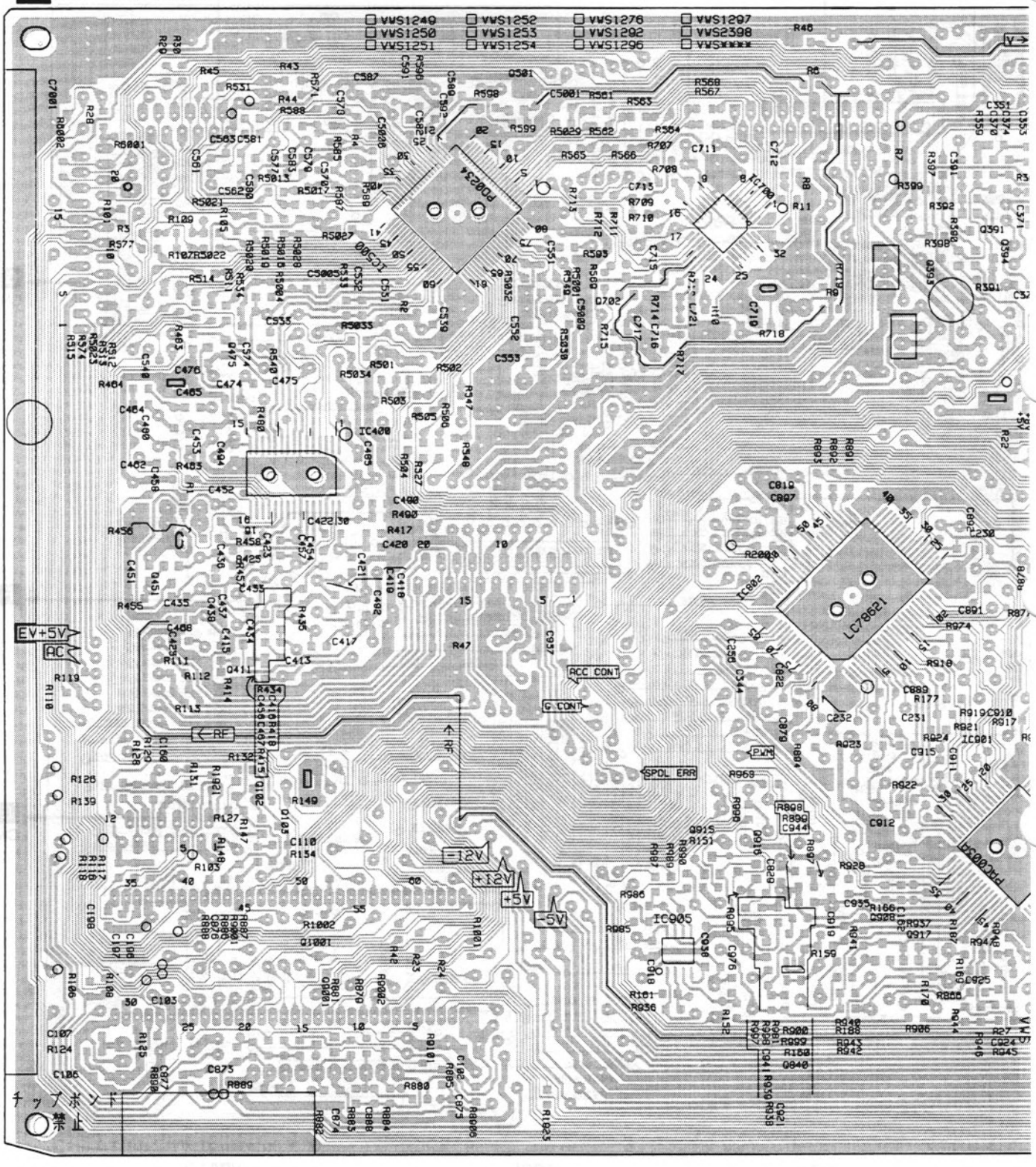

Q451 Q475 IC400 IC500 Q501 Q702 IC700 IC802 Q393 Q391 Q
Q411 Q102 Q103 IC905 Q915 Q916 Q840 Q908 Q917 IC90
Q1001 Q9001

SIDE B

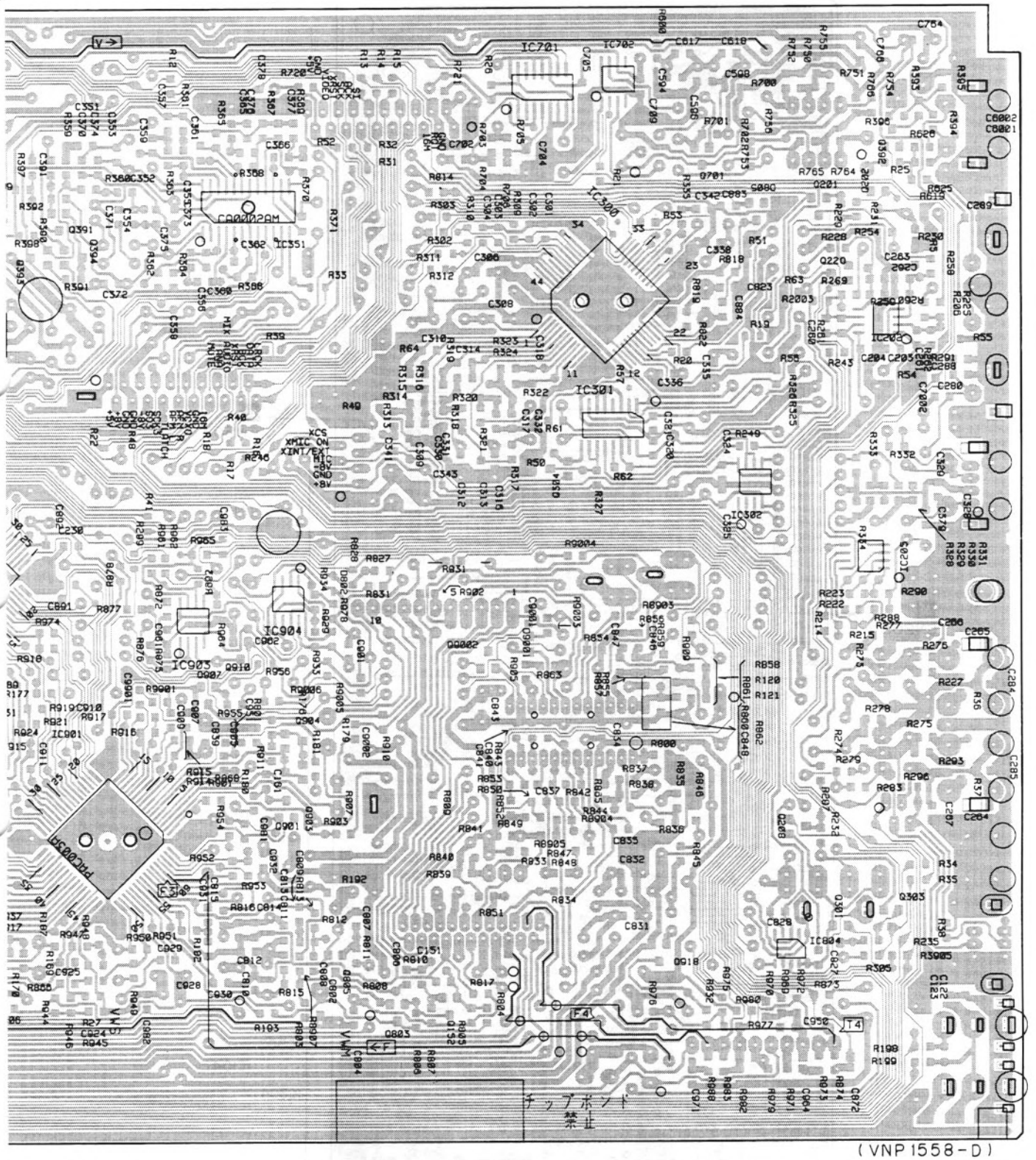

(VNP1558-D)

393 Q391 Q394 IC351 IC701 IC702 Q701 Q201 Q202 Q392
917 IC901 IC903 Q910 IC904 Q904 Q9002 IC300 IC302 Q208 Q220 IC202
Q907 Q901 Q903 Q805 Q803 Q152 Q304 IC301 Q918 IC804 Q301 IC205 Q303

SIDE B

4.5 KRAB ASSY

N KRAB ASSY

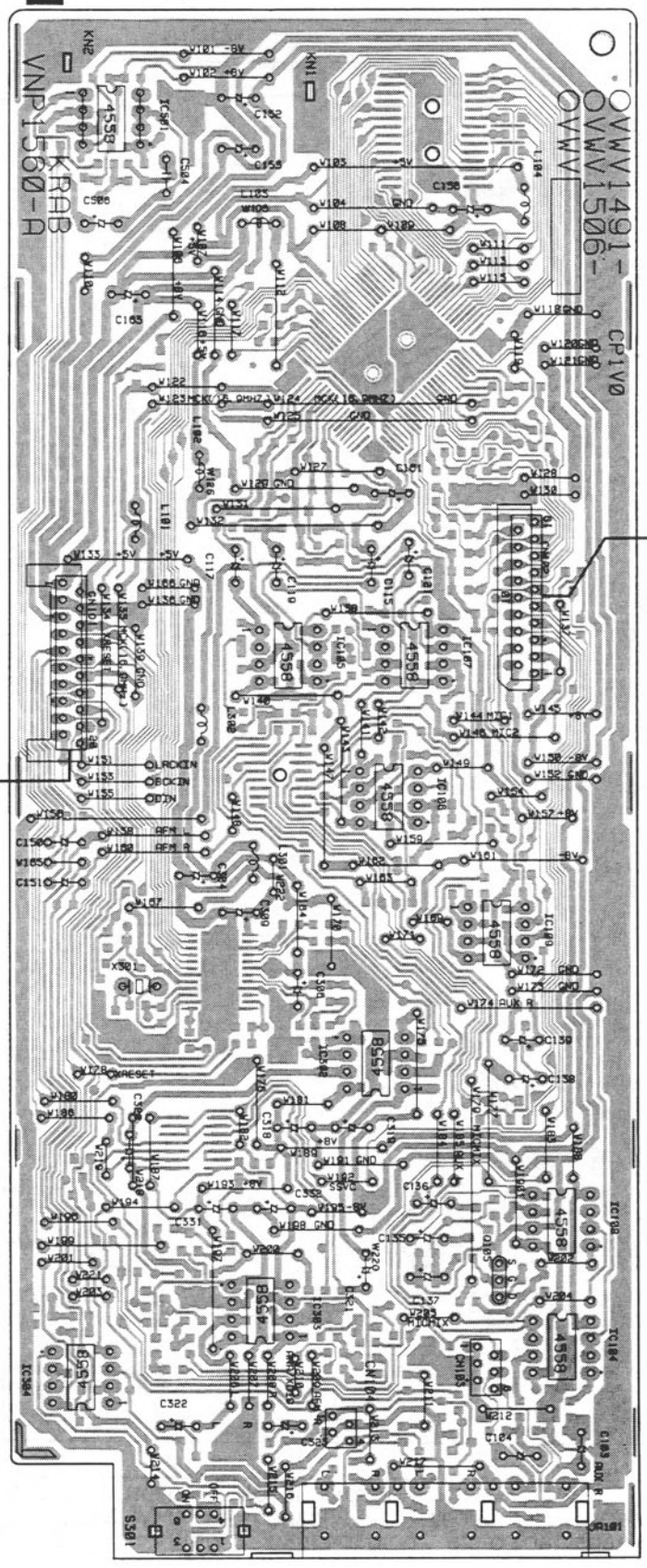

N KRAB ASSY

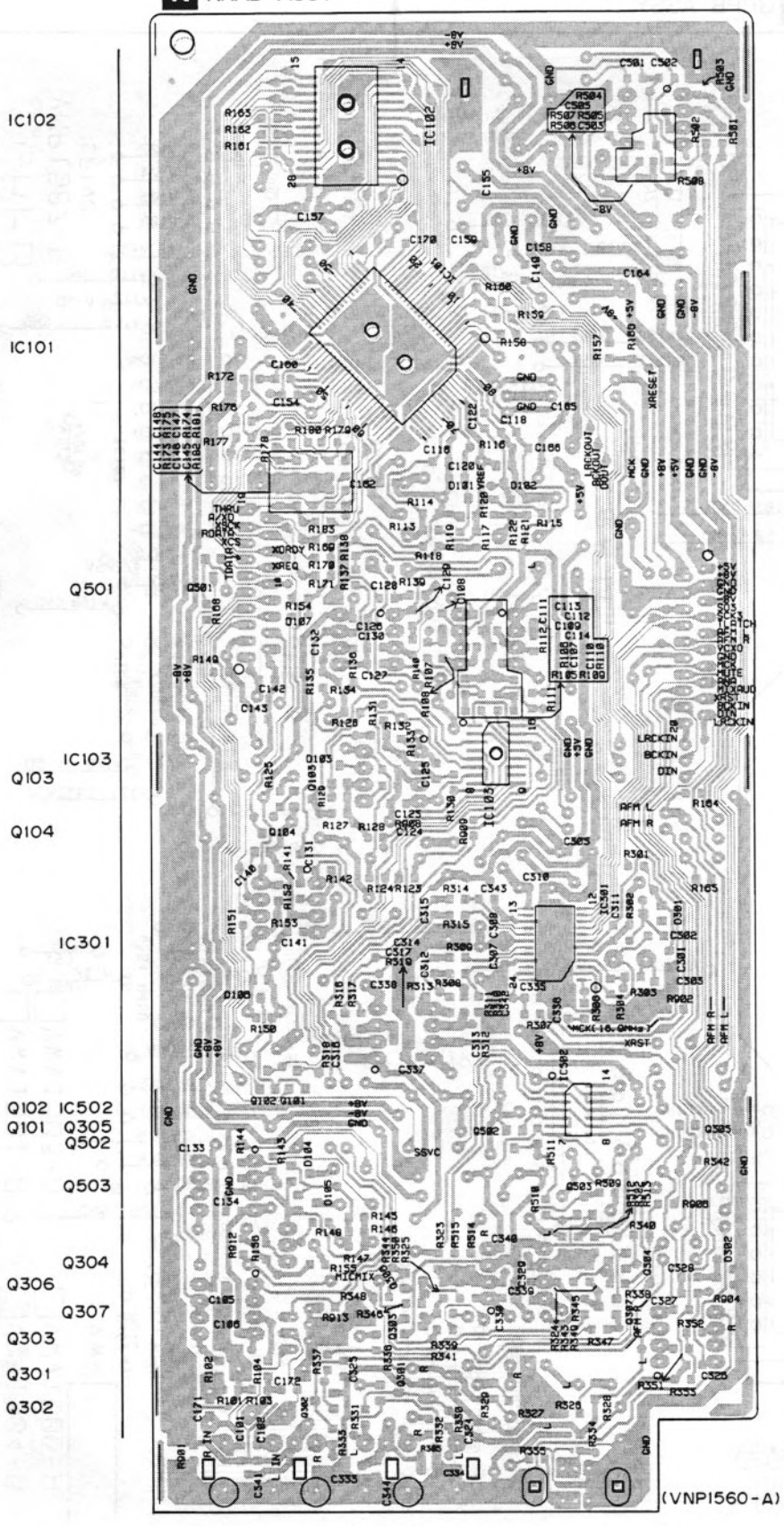

SIDE B

4.6 GRPB ASSY

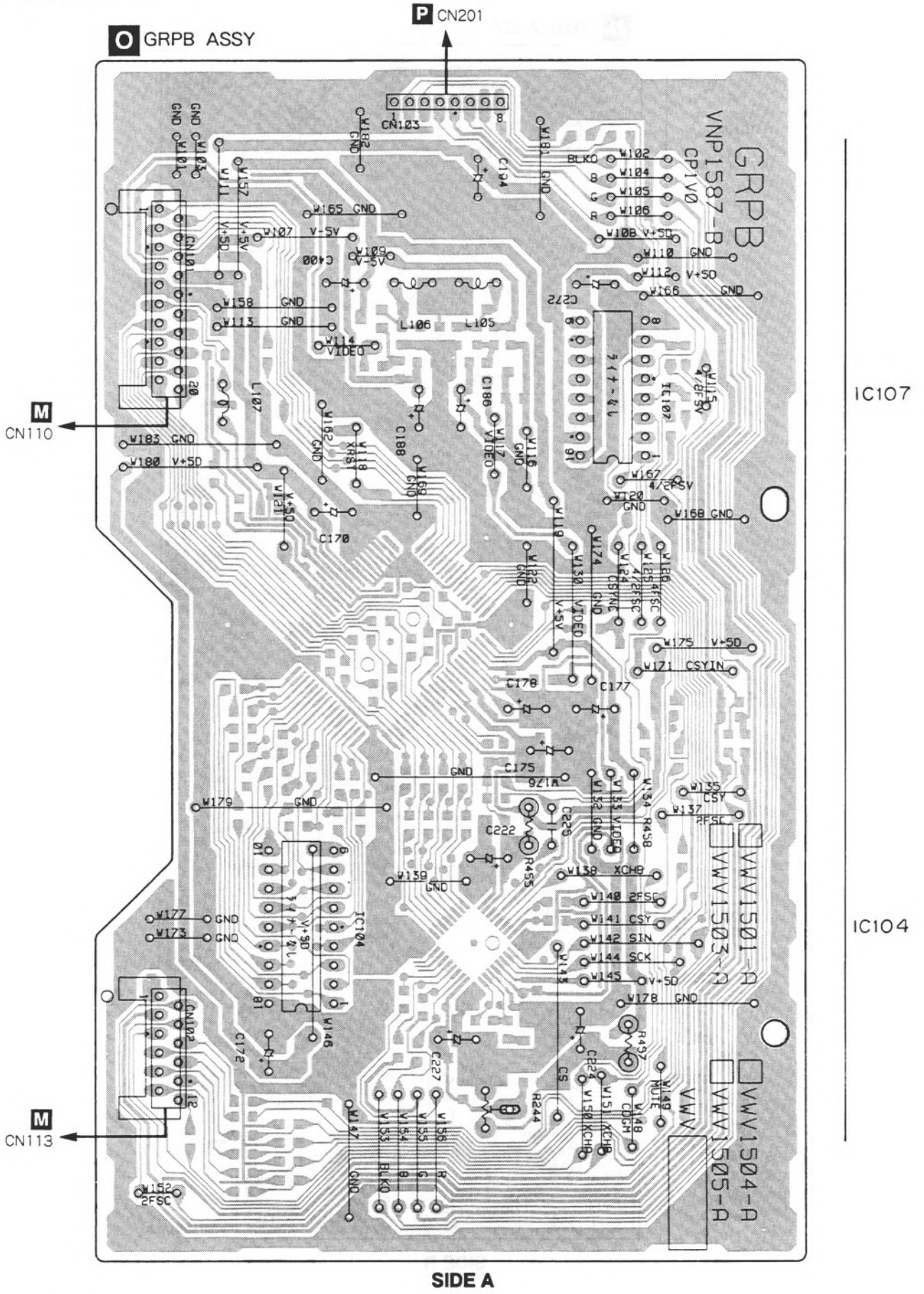

O GRPB ASSY

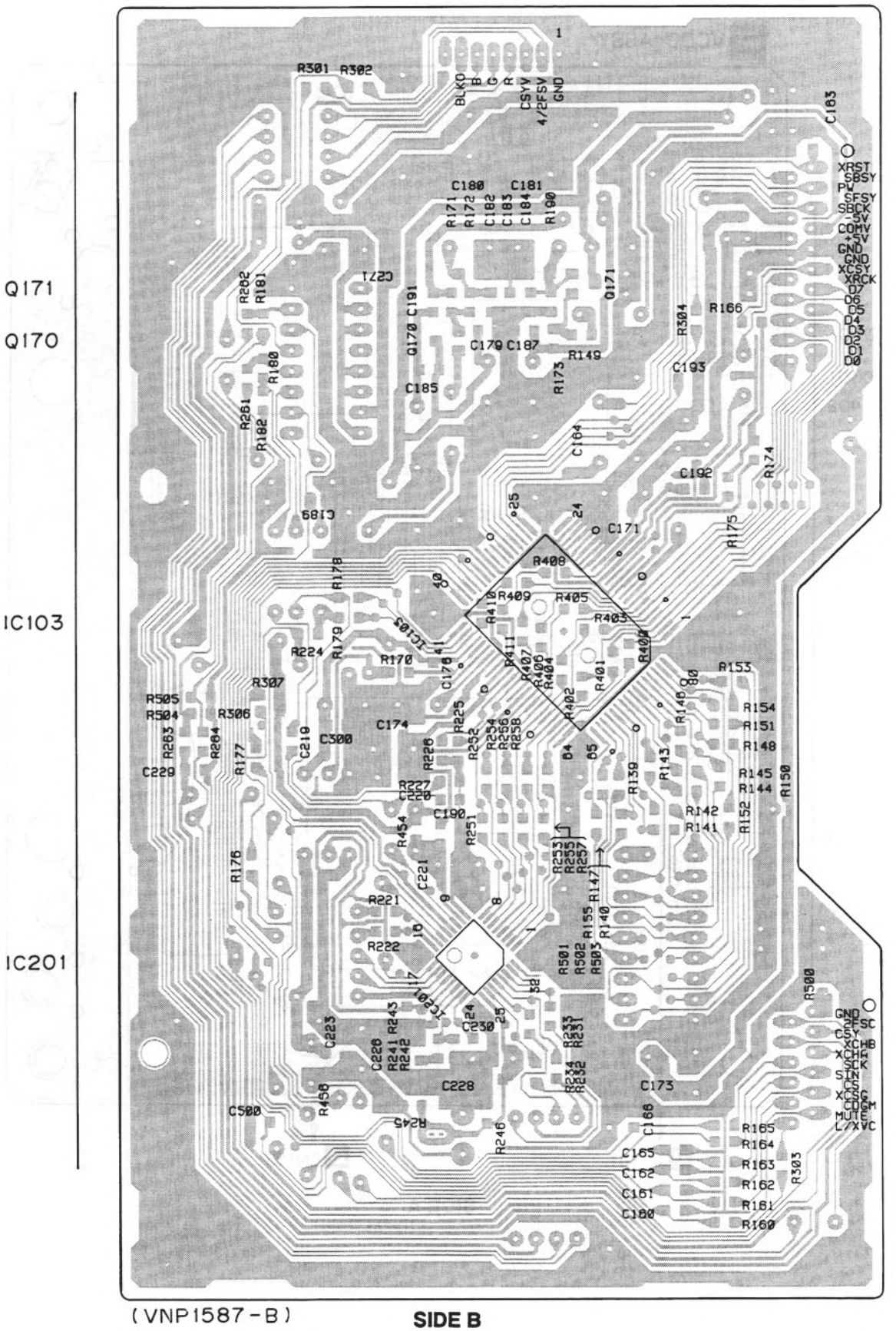

(VNP1587-B)

SIDE B

4.7 VCDB ASSY

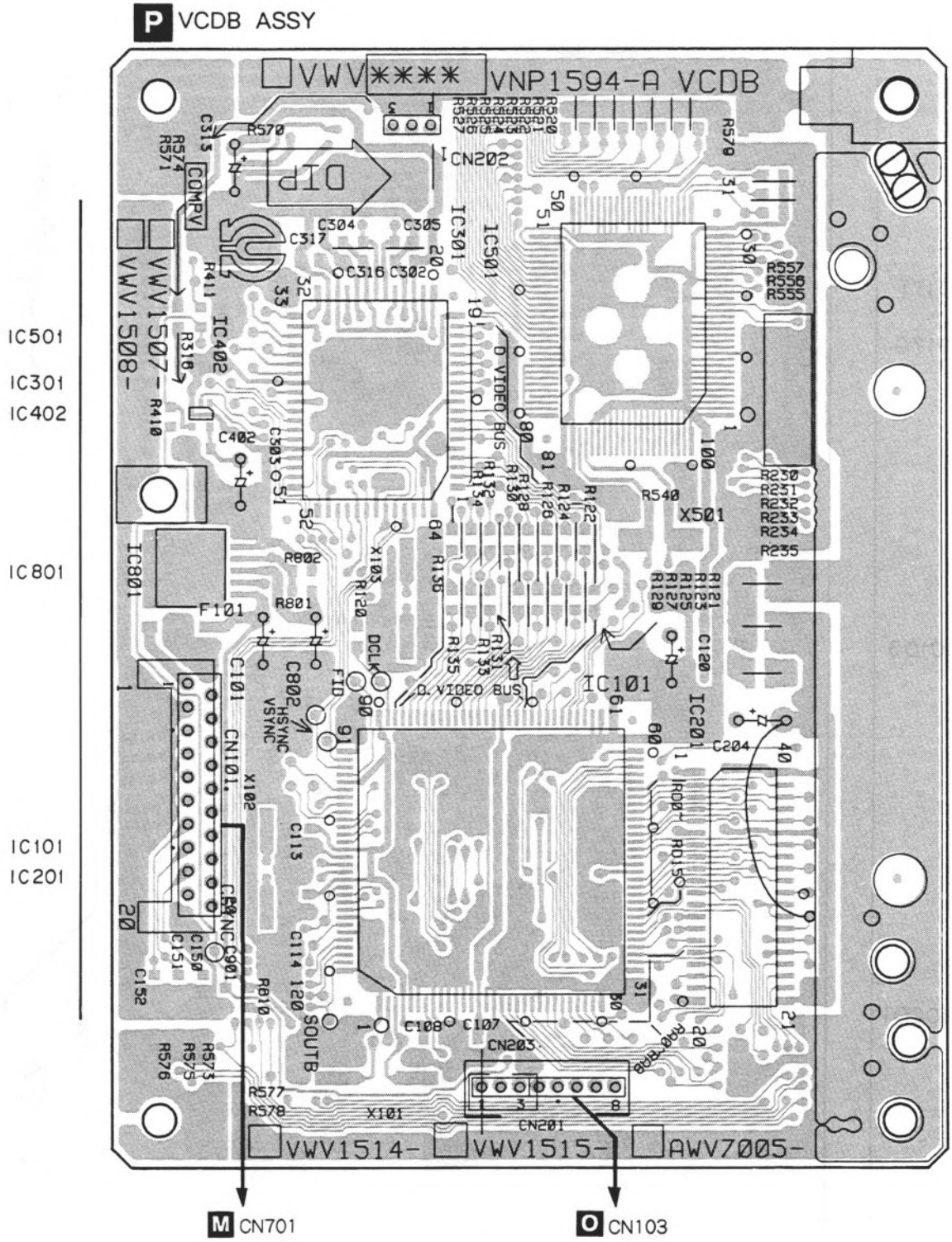

SIDE A

P VCDB ASSY

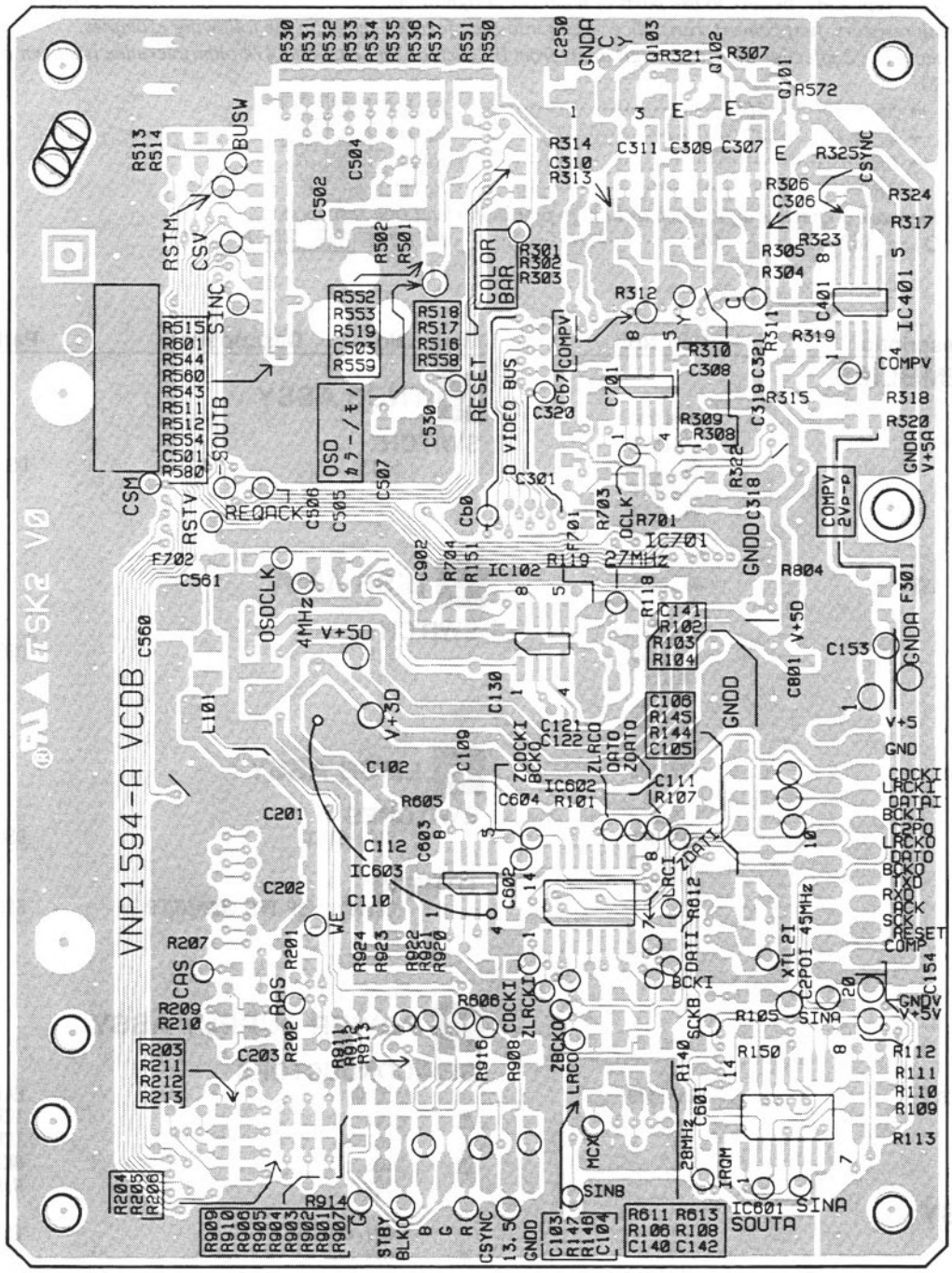
VNP1594-A VCDB
Q101
Q103
IC401
IC701
IC102
IC603
IC602
IC601
SIDE B

5. PCB PARTS LIST

NOTES: ● *Parts marked by "NSP" are generally unavailable because they are not in our Master Spare Parts List.*
● *The ⚠ mark found on some component parts indicates the importance of the safety factor of the part. Therefore, when replacing, be sure to use parts of identical designation.*
● *When ordering resistors, first convert resistance values into code form as shown in the following examples.*
Ex.1 When there are 2 effective digits(any digit apart from 0), such as 560 ohm and 47k ohm(tolerance is shown by J=5%, and K=10%).
560 Ω → 56 × 10¹ → 561 ····· RD1/4PU 5 6 1 J
47k Ω → 47 × 10³ → 473 ····· RD1/4PU 4 7 3 J
0.5 Ω → 0R5 ····· RN2H 0 R 5 K
1 Ω → 1R0 ····· RS1P 1 R 0 K
Ex.2 When there are 3 effective digits(such as in high precision metal film resistors).
5.62k Ω → 562 × 10¹ → 5621 ····· RN1/4PC 5 6 2 1 F

Mark	No.	Description	Part No.
LIST OF ASSEMBLIES			
NSP		MACB ASSY	VWM1535
NSP		├─ PKSB ASSY	VWG1555
NSP		├─ FG ASSY	VWG1556
NSP		├─ TNSB ASSY	VWG1557
NSP		├─ BISB ASSY	VWG1558
NSP		└─ LMSB ASSY	VWG1612
⚠		POWER SUPPLY ASSY	VWR1268
NSP		FRPB ASSY	VWM1692
		├─ FLKB ASSY	VWG1765
NSP		├─ VRSB ASSY	VWG1761
		├─ KALB ASSY	VWG1762
NSP		├─ DIKB ASSY	VWG1763
NSP		├─ IOEB ASSY	VWG1764
NSP		└─ JACB ASSY	VWV1492
		MOTHER ASSY	VWS1252
		KRAB ASSY	VWV1491
		GRPB ASSY	VWV1503
		VCDB ASSY	VWV1507
MACB ASSY			
OTHERS			
		PC Board MACB	VNP1479
A PKSB ASSY			
SWITCHES			
		S104, S105	DSG1017
B FG ASSY			
SEMICONDUCTOR			
		D101	GP1S24
C TNSB ASSY			
SWITCH			
		S111	DSG1017
D BISB ASSY			
SWITCH			
		S112	DSG1017
E LMSB ASSY			
SWITCHES			
		S101-S103	DSG1017
OTHERS			
		CN101 12P FFC CONNECTOR	52044-1245
F POWER SUPPLY ASSY			
SEMICONDUCTORS			
		IC20	HA17431P
⚠		IC2	ICP-N15
⚠		IC1	ICP-N20
⚠		IC5	MK1210
		IC21	NJM4558D
		Q27, Q30, Q32	2SA933S
⚠		Q24	2SB891F
		Q25, Q29, Q31	2SC1740S
⚠		Q2, Q3	2SC3377
⚠		Q26	2SD2007
⚠		Q1	2SK1460
		Q21, Q23	T7F4S
		Q20, Q22	T7F4T
⚠		D7	1SS270A
		D25-D27, D30, D31	AG01Z-V0

Mark	No.	Description	Part No.
⚠	D1		D2SB60F4004
⚠	D2, D8		EG01C
⚠	D5		MTZJ3.6A
	D29		MTZJ8.2B
⚠	D4		PS2501L1-1M
⚠	D20		PS2561L1-1VM
⚠	D3		RD18FB2
	D40		RD33FB2
	D23, D24		RK36
	D21, D22		S3LA20
⚠	PUT1		N13T1
RESISTORS			
⚠	R22-R25(47Ω, 1/6W)		VCN1033
⚠	R27(0.47Ω, 1/2W)		VCN1046
⚠	R29(68Ω, 1/4W)		VCN1048
⚠	R31(8.2Ω, 1/4W)		VCN1050
OTHERS			
⚠	F1	FUSE(T2A/250V)	AEK1057
⚠	F2	FUSE	VEK1033
⚠	F3, F4	FUSE	VEK1034
⚠	F5, F6	FUSE(1.0A/125V)	VEK1036

FRPB ASSY

OTHERS

	PC Board FRPB	VNP1561

G FLKB ASSY

SEMICONDUCTORS

	IC101	PD3350A
	IC102	S-806D
	Q102	DTA144ES
	Q101	DTC114ES
	D101	1SS252

SWITCHES

	S101-S107	ASG1034

CAPACITORS

	C109	CEAL100M16
	C103, C105, C115	CEAL470M6R3
	C111-C113	CKPUYB101K50
	C107, C110	CKPUYB102K50
	C108	CKPUYF223Z25
	C102, C104	CKPUYY103N16

RESISTORS

	R140	RA10S104J
	R141	RA11S104J
	R110, R113, R114, R127	RN1/6PQ1001F
	Other Resistors	RD1/4PU□□□J

OTHERS

CN101	2.5mm PIN HEADER	1068-08C-PP
CN105	FFC BOTTOM CONNECTOR 24P	52492-2420
CN107	2.54mm PIN HEADER	9202B-1-02P
CN103	20P CONNECTOR	BTMK20S-1S
X101	CERAMIC RESONATOR(8Mz)	EFOEC8004A4
CN104	2mm PITCH CONNECTOR PLUG	TKC-A06P-C1
V101	FL TUBE	VAW1039
	SPACER	VEC1599
	FL HOLDER(FE)	VNF1091

H VRSB ASSY

SWITCH

	S601	VSH1011

CAPACITORS

	C602	CKPUYB102K50
	C601, C603, C604	CKPUYY103N16

RESISTORS

	VR601, VR602(10kΩ)	VCS1040
	Other Resistors	RD1/4PU□□□J

OTHERS

CN601	CONNECTOR 6P	06P-FJ
	PCB HOLDER(FE)	VNE2026

I KALB ASSY

SEMICONDUCTORS

	IC201	BU2090
	D206, D207	SLR-342MCT31
	D201, D210	SLR-342VCT31
	D202-D205, D208, D209	SLR-342YCT31

SWITCHES

	S201-S209	ASG1034

CAPACITORS

	C202, C204	CKPUYY103N16

RESISTORS

	All Resistors	RD1/4PU□□□J

OTHERS

	REMOTE SENSOR UNIT	GP1U26X
CN201	2mm PITCH B TO B CONNECTOR	TKC-A06X-B1

J DIKB ASSY

SEMICONDUCTORS

	D301-D315	SLR-342MCT31

SWITCHES

	S301-S317	ASG1034

RESISTORS

	All Resistors	RD1/4PU□□□J

OTHERS

CN302, CN303	FFC BOTTOM CONNECTOR 10P	52492-1020
CN301	8P BOARD CONNECTOR	9133S-08A

Mark	No.	Description	Part No.
K	**IOEB ASSY**		
	SEMICONDUCTORS		
	IC701, IC702		BU2090F
	CAPACITORS		
	C701, C703		CKPUYY103N16
	RESISTORS		
	All Resistors		RD1/4PU□□□J
	OTHERS		
	CN701, CN702	10P FFC CONNECTOR	52044-1045
L	**JACB ASSY**		
	SEMICONDUCTORS		
	IC502		NJM2068D
	IC501		NJM4558DX
	CAPACITORS		
	C514, C515		CEJA101M10
	C504, C505		CKPUYB271K50
	C520		CKPUYF223Z25
	C509, C512		CKPUYX122M16
	C510, C513		CKPUYX152M16
	C501, C502, C507, C508		CKPUYY103N16
	C503, C506		CQMA104J50
	RESISTORS		
	R508		RN1/6PQ2001F
	R507		RN1/6PQ3001F
	VR501, VR502(10kΩ)		VCS1040
	Other Resistors		RD1/4PU□□□J
	OTHERS		
	CN502	FJ CONNECTOR 6P	06R-FJ
	CN503	19P FFC CONNECTOR	52044-1945
	CN501	20P CONNECTOR	BTMK20P-1R
	JA502	HEADPHONE JACK	RKN1006
	JA501, JA503	MIC JACK	VKN1147
		SNAP PLATE	VNE1102
		JACK HOLDER(FE)	VNE2054
M	**MOTHER ASSY**		
	SEMICONDUCTORS		
	IC904		BA10393F
	IC903		BA4560F
	IC351		CA0002AM
	IC803		LA6510
	IC400		LA7134M
	IC901		LA9420M
	IC801		LA9425
	IC802		LC78621E
	IC703		MC14577CP
	IC702		NJM2235M

Mark	No.	Description	Part No.
	IC206		NJM78M08FA
	IC207		NJM79M08FA
	IC500		PD0234A
	IC101		PD0245A2
	IC902		TA8410AK
	IC804		TC4W53F
	IC905		XLA4560F
	Q1001, Q102, Q916		2PB709A
	Q391, Q393, Q394, Q451, Q475		2PD601A
	Q805, Q9001, Q903, Q904		2PD601A
	Q907, Q908, Q915, Q917		2PD601A
	Q834		2SA854S
	Q411, Q803		2SC2412K
	Q152		2SC3802K
	Q208, Q301, Q392		DTA124EK
	Q103, Q303, Q901, Q910, Q918		DTC124EK
	Q840		FMY1A
	D202		11EQS06
	D102, D180, D801, D901, D902		1SS254
	D905, D963		1SS254
	D802		1SS355
	D110		MTZJ5.1B
	COILS AND FILTERS		
	L413		LAU100J
	L410		LAU101J
	L351, L802-L804		LAU181J
	L352, L412, L461, L470		LAU220J
	L800, L801, L808, L809		LAU220J
	L411, L571		LAU270J
	L420, L421, L580		LAU430J
	L462		LAU560J
	L414		LAU8R2J
	L460		LFA561J
	F501		VTF1055
	L5001		VTH1024
	CAPACITORS		
	C562		CCSQCH050C50
	C436, C809, C811		CCSQCH070D50
	C420, C421, C438, C456, C5001		CCSQCH100D50
	C583		CCSQCH100D50
	C370, C810, C846, C848, C891		CCSQCH101J50
	C944		CCSQCH101J50
	C434, C437, C474, C579		CCSQCH120J50
	C416		CCSQCH121J50
	C415, C418, C475		CCSQCH150J50
	C161, C353, C812		CCSQCH151J50
	C352, C552		CCSQCH180J50
	C813, C950		CCSQCH220J50
	C162, C417, C591, C935		CCSQCH221J50
	C371, C419, C433, C467, C931		CCSQCH270J50
	C106, C107, C354, C435, C452		CCSQCH330J50
	C553, C563, C580		CCSQCH330J50
	C351, C425, C476		CCSQCH390J50
	C464, C468		CCSQCH470J50
	C375, C561, C806		CCSQCH680J50
	C374, C814		CCSQCH820J50

Mark	No.	Description	Part No.
	C460, C462		CCSQCH910J50
	C439		CEAL100M16
	C412, C484, C491, C706-C708		CEAL470M6R3
	C833, C836, C844		CEAL470M6R3
	C838		CEALNP470M6R3
	C972		CEANP220M10
	C450		CEANP470M6R3
	C904		CEAS010M50
	C228, C367		CEAS100M50
	C364, C424, C917		CEAS101M10
	C821, C922, C967		CEAS220M25
	C845, C870, C902, C926		CEAS2R2M50
	C101, C225, C226, C363, C369		CEAS470M10
	C493, C530, C534, C538, C550		CEAS470M10
	C763, C765, C801, C803, C820		CEAS470M10
	C842, C882, C890, C893, C898		CEAS470M10
	C927, C933, C974, C975		CEAS470M10
	C368, C943		CEASR47M50
	C968, C987		CEHAQ220M50
	C585, C588		CEJA470M6R3
	C850		CEJA4R7M35
	C256, C490, C907		CKSQYB102K50
	C879		CKSQYB103K50
	C915, C981		CKSQYB104K25
	C919		CKSQYB332K50
	C361, C362		CKSQYB392K50
	C355-C358, C377, C909		CKSQYB472K50
	C110, C122, C160, C196-C198		CKSQYF103Z50
	C372, C373, C376, C378, C451		CKSQYF103Z50
	C454, C532, C533, C540, C570		CKSQYF103Z50
	C577, C578, C581, C802, C804		CKSQYF103Z50
	C807, C819, C822, C831, C832		CKSQYF103Z50
	C834, C835, C843, C872, C876		CKSQYF103Z50
	C888, C889, C892, C897, C918		CKSQYF103Z50
	C928, C929, C932, C937, C938		CKSQYF103Z50
	C941, C961, C962, C964, C971		CKSQYF103Z50
	C982		CKSQYF103Z50
	C102, C103, C151, C365, C366		CKSQYF104Z25
	C391, C413, C422, C423, C453		CKSQYF104Z25
	C457, C458, C485, C492, C494		CKSQYF104Z25
	C5006, C531, C539, C551, C574		CKSQYF104Z25
	C582, C589, C592, C709, C764		CKSQYF104Z25
	C766, C827, C828, C840, C841		CKSQYF104Z25
	C847, C873, C874, C901		CKSQYF104Z25
	C910-C912, C976, C983		CKSQYF104Z25
	C837, C921, C930		CKSQYF223Z50
	C359, C360, C905, C951		CKSQYF224Z25
	C465, C808, C815, C875, C877		CKSQYF473Z25
	C924, C925		CKSQYF473Z25
	C942		CQMA103J50
	C913, C920		CQMA104J50
	C479, C908, C973		CQMA154J50
	C903		CQMA222J50
	C923		CQMA473J50
	C934		CQMA681J50
	C483		CQMA683J50
	C871(10μF/16V NP)		VCH1152
	VC901(20pF)		VCM-008

RESISTORS

R927		RD1/4PU122J
R420		RD1/4PU470J
R625, R626		RN1/10SC750D
R490, R987, R989		RN1/10SE103D
R880, R883		RN1/10SE104D
R750		RN1/10SE132D
R702		RN1/10SE152D
R764		RN1/10SE271D
R879, R986, R990		RN1/10SE333D
R753		RN1/10SE471D
R765, R766, R881, R882		RN1/10SE473D
R751		RN1/10SE681D
R754		RN1/10SE911D
VR450(2.2kΩ)		PCP1025
VR603(4.7kΩ)		RCP1020
VR604, VR607, VR608(47kΩ)		RCP1047
Other Resistors		RS1/10S□□□J

OTHERS

CN108	12P FFC CONNECTOR	52045-1245
CN102	21P FFC CONNECTOR	52045-2145
CN104	24P FFC CONNECTOR	52045-2445
CN103	23P FFC CONNECTOR	52233-2310
CN106	11P TOP POST	B11P-SHF-1AA
CN113	B TO B CONNECTOR 12P	BTFN12S-3SB7
CN110, CN203, CN701	B TO B CONNECTOR 20P	BTFN20S-3SB7
JA3, JA4	REMOTE CONTROL JACK	RKN1004
	PCB BINDER	VEF1040
JA15	3P PIN JACK	VKB1091
	SCREW PLATE	VNE1948
KN101, KN102	EARTH METAL FITTING	VNF1084
X101	CERAMIC RESONATOR(9.00MHz)	VSS1040
X550	CRYSTAL RESONATOR (14.318MHz)	VSS1073

N KRAB ASSY

SEMICONDUCTORS

IC103		BU4053BCF
IC102		LH5P832N-12
IC104-IC109, IC302-IC304		NJM4558DX
IC101		PM0007A
IC301		TC9400F
Q103, Q301-Q304, Q306, Q307		2SD2114K
Q105		2SK184
Q101, Q102, Q104, Q305		DTC124EK
D107		1SS355
D101-D106, D302		DA204K
D301		KV1851

Mark	No.	Description	Part No.
COILS			
	L102, L104		LFA100J
	L301, L302		LFA220J
	L101		LFA3R9J
SWITCH			
	S301		VSH1009
CAPACITORS			
	C342, C343		CCSQCH050C50
	C116, C118, C120, C122		CCSQCH101J50
	C312, C315		CCSQCH151J50
	C130		CCSQCH181J50
	C303, C336		CCSQCH220J50
	C144-C148		CCSQCH390J50
	C313, C314, C316, C317		CCSQCH430J50
	C109, C112		CCSQCH680J50
	C324, C325, C344		CCSQSL102J50
	C101, C102		CCSQSL331J50
	C103, C104		CEANP010M50
	C150, C151		CEANP2R2M50
	C135, C136, C138, C139		CEAS100M25
	C322, C323		CEAS100M25
	C161, C163, C304, C306, C309		CEAS101M10
	C318, C319, C331, C332		CEAS101M10
	C119, C121		CEAS2R2M50
	C137		CEAS330M16
	C115, C117		CEAS470M16
	C149, C154, C302		CKSQYB103K50
	C131		CKSQYB104K25
	C132		CKSQYB122K50
	C108, C111, C125, C129, C328		CKSQYB223K50
	C107, C110		CKSQYB332K50
	C128		CKSQYB472K50
	C105, C106, C113, C114		CKSQYF103Z50
	C123, C124, C126, C127		CKSQYF103Z50
	C133, C134, C140, C141, C301		CKSQYF103Z50
	C305, C310, C326, C327, C335		CKSQYF103Z50
	C337, C338		CKSQYF103Z50
	C142, C143, C157-C160, C162		CKSQYF104Z25
	C164, C170, C307, C308, C311		CKSQYF104Z25
	C333, C334, C341		CKSQYF104Z25
RESISTORS			
	R113-R116		RN1/10SE102D
	R312, R313, R318, R319		RN1/10SE473D
	R322-R325		RN1/10SE473D
	Other Resistors		RS1/10S□□□J
OTHERS			
	CN102	19P FFC CONNECTOR	52045-1945
	JA101	PIN JACK(6P)	AKB7050
	CN101	B TO B CONNECTOR 20P	BTFN20P-3RD7
		PCB BINDER	VEF1040
	X301	CRYSTAL RESONATOR(16MHz)	VSS1081

Mark	No.	Description	Part No.
O GRPB ASSY			
SEMICONDUCTORS			
	IC201		PD0239A
	IC107		TC74HC157AP
	Q170, Q171		2PD601A
COILS			
	L105, L106		LFA220J
CAPACITORS			
	C180		CCSQCH060D50
	C190		CCSQCH100D50
	C165, C166		CCSQCH150J50
	C181, C182, C189		CCSQCH220J50
	C229		CCSQCH221J50
	C184		CCSQCH330J50
	C183		CCSQCH680J50
	C222, C227		CEAL470M6R3
	C186, C188, C194, C272, C400		CEAS470M10
	C224		CEJA221M6R3
	C226		CKSQYB472K50
	C179, C185, C187, C191		CKSQYF103Z50
	C219, C221, C223, C228, C230		CKSQYF104Z25
	C271		CKSQYF104Z25
RESISTORS			
	R455, R458		RFA1/6PU4R7J
	R190		RN1/10SE132D
	R246		RN1/10SE152D
	R245		RN1/10SE162D
	R243		RN1/10SE181D
	R172		RN1/10SE681D
	Other Resistors		RS1/10S□□□J
OTHERS			
	CN103	FJ CONNECTOR 8P	08PL-FJ
	CN102	B TO B CONNECTOR 12P	BTFN12P-3RD7
	CN101	B TO B CONNECTOR 20P	BTFN20P-3RD7
P VCDB ASSY			
SEMICONDUCTORS			
	IC101		CXD1852Q
	IC301		CXD1913AQ
	IC201		HM514260CLJ-7
	IC401		MC14577CF
	IC501		PD6193A
	IC801		PQ20VZ51
	IC601		TC74HC125AF
	IC602		TC74HCT7007AF
	IC402		TC7S08F
	IC102, IC603		TC7WU04F
	Q103		2PB709A
FILTER			
	F101		VTH1037

Mark	No.	Description	Part No.
CAPACITORS			
	C105, C106		CCSQCH050C50
	C103, C104		CCSQCH100D50
	C604		CCSQCH101J50
	C121, C122		CCSQCH150J50
	C505, C506		CCSQCH200J50
	C310, C311		CCSQCH220J50
	C902		CCSQCH470J50
	C101, C120, C204, C303, C313		CEAL470M6R3
	C802		CEAL470M6R3
	C102, C107-C114, C130		CKSQYF104Z25
	C201-C203, C250, C301, C302		CKSQYF104Z25
	C304, C305, C316-C321		CKSQYF104Z25
	C401, C402, C501-C504, C507		CKSQYF104Z25
	C530, C601-C603, C801		CKSQYF104Z25
RESISTORS			
	R320		RN1/10SC750D
	R301		RN1/10SE103D
	R802		RN1/10SE122D
	R801		RN1/10SE202D
	R312		RN1/10SE221D
	R302, R303		RN1/10SE332D
	R318, R319		RN1/10SE471D
	R705		RS1/8S000J
	Other Resistors		RS1/10S□□□J
OTHERS			
	CN201	FJ CONNECTOR 8P	08R-FJ
	CN101	B TO B CONNECTOR 20P	BTFN20P-3RD7
	X501	CERAMIC RESONATOR(4MHz)	CSAC4.00MGCM
	X103	CRYSTAL RESONATOR (27.000MHz)	VSS1095
	X101	CRYSTAL RESONATOR (28.63636MHz)	VSS1096
	X102	CRYSTAL RESONATOR (45.1584MHz)	VSS1097

6. ADJUSTMENTS (調整方法)

6.1 ADJUSTMENT ITEMS AND LOCATION (調整項目と調整位置)

■Adjustment Points (PCB Part)

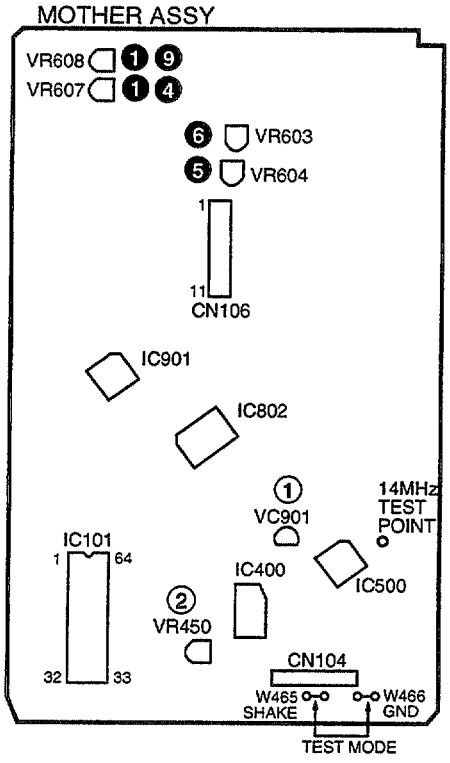

■Adjustment Items

[Mechanical Part]

❶ Tilt Offset Adjustment
(チルトオフセット調整)

❷ Tangential Direction Angle Adjustment for Side A
(A面タンジェンシャル傾き調整)

❸ Spindle Motor Centering Adjustment for Side A
(A面スピンドル芯出し調整)

❹ Crosstalk Check and Fine Tilt Offset Adjustment for Side A
(A面クロストーク確認及び，チルトオフセット微調)

❺ Focus Servo Loop Gain Adjustment
(フォーカスサーボループゲイン調整)

❻ Tracking Servo Loop Gain Adjustment
(トラッキングサーボループゲイン調整)

❼ Tangential Direction Angle Adjustment for Side B
(B面タンジェンシャル傾き調整)

❽ Spindle Motor Centering Adjustment for Side B
(B面スピンドル芯出し調整)

❾ Crosstalk Check and Fine Tilt Offset Adjustment for Side B
(B面クロストーク確認及び，チルトオフセット微調)

[Electrical Part]

① Master Clock Adjustment
(マスタークロック調整)

② Output Video Level Adjustment
(出力ビデオレベル調整)

■Adjustment Points (Mechanism Part)

[Side A]

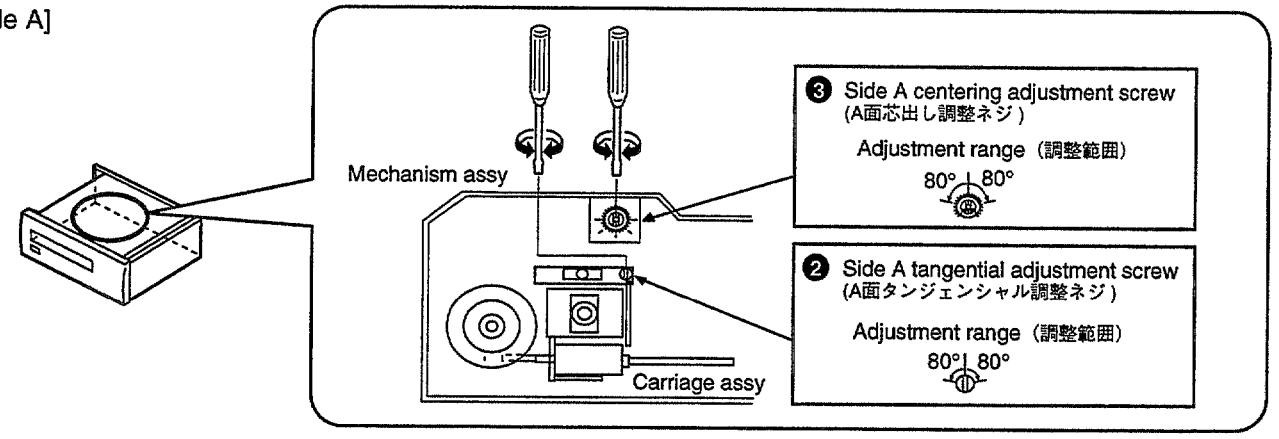

[Side B]

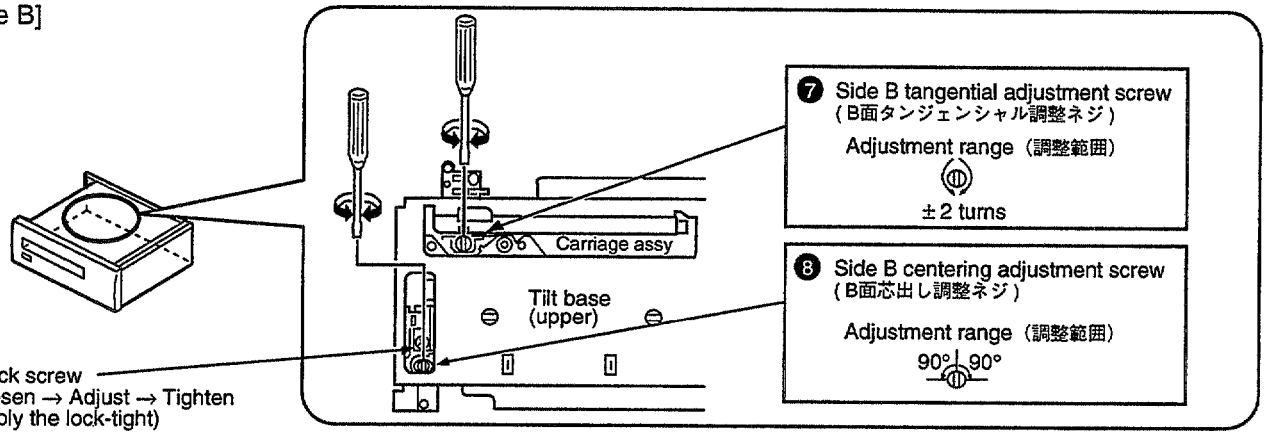

6.2 JIGS AND MEASURING INSTRUMENTS (調整に必要な治工具類)

 CD test disc (YEDS-7)	 LD test disc (GGV1012)	 ⊖ Screwdriver (medium)	 ⊖ Screwdriver (small)
 ⊖ Precise screwdriver	 ⊕ Screwdriver (large)	 ⊕ Screwdriver (medium)	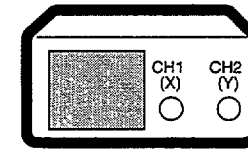 Dual-trace oscilloscope (with delay) Frequency band ≧ 40MHz
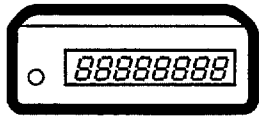 Frequency counter Display digit ≧ 8-digit	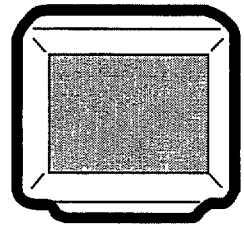 TV monitor	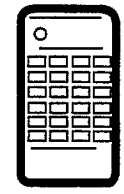 Test mode remote control unit (GGF1067)	

6.3 TEST MODE (テストモード)

TEST MODE: ON

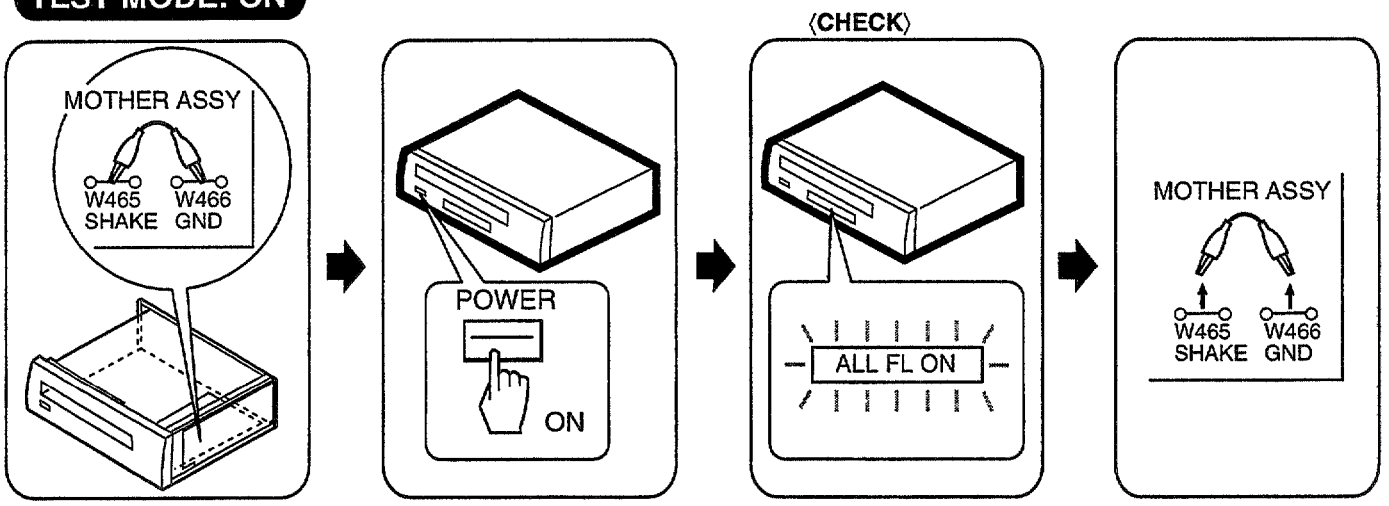

OR

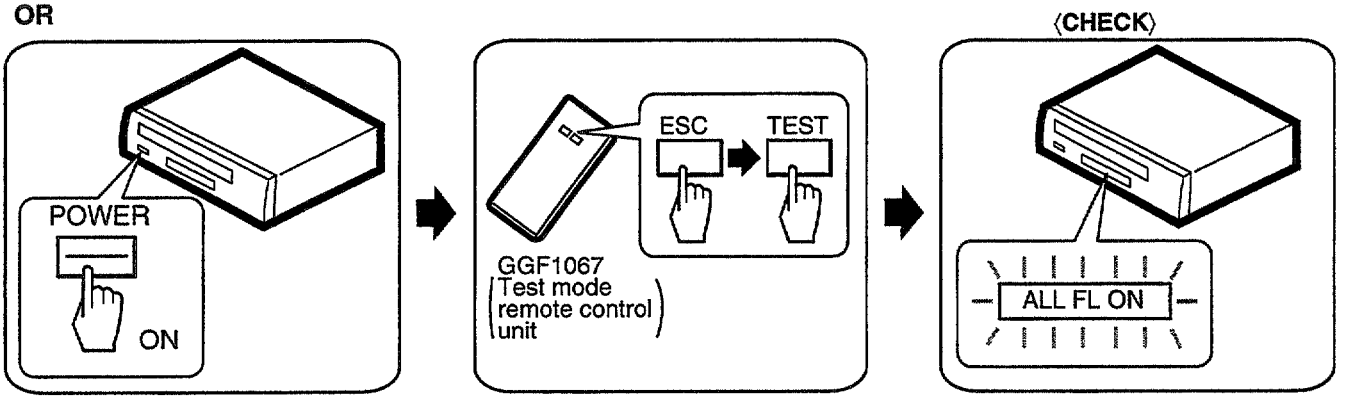

TEST MODE: DISC SET

- **With TRAY** (トレー有りの場合)

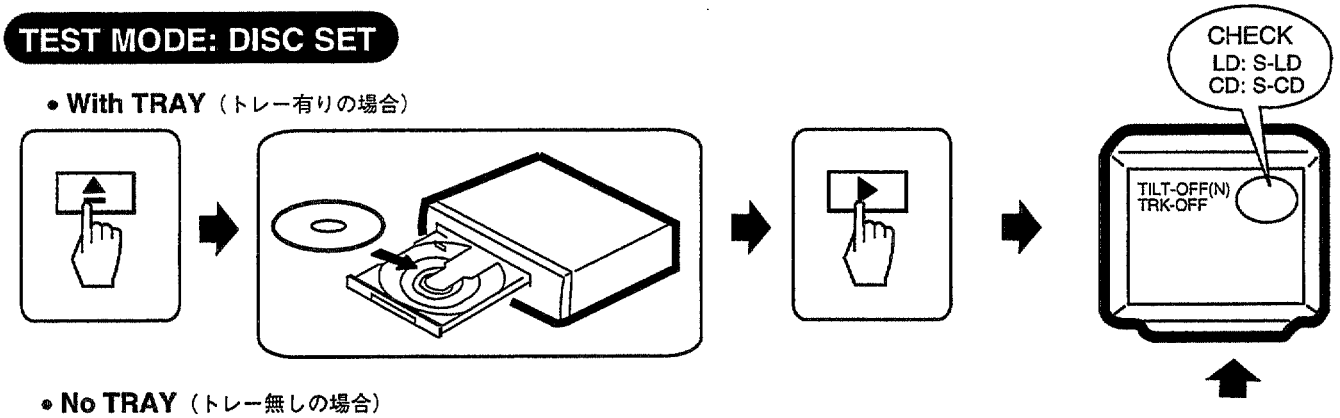

- **No TRAY** (トレー無しの場合)

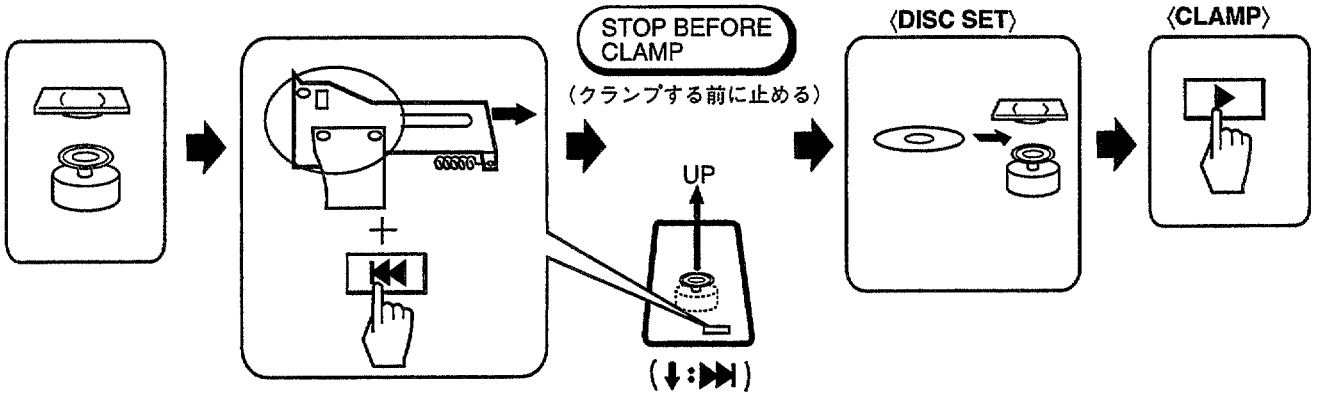

TEST MODE: PLAY

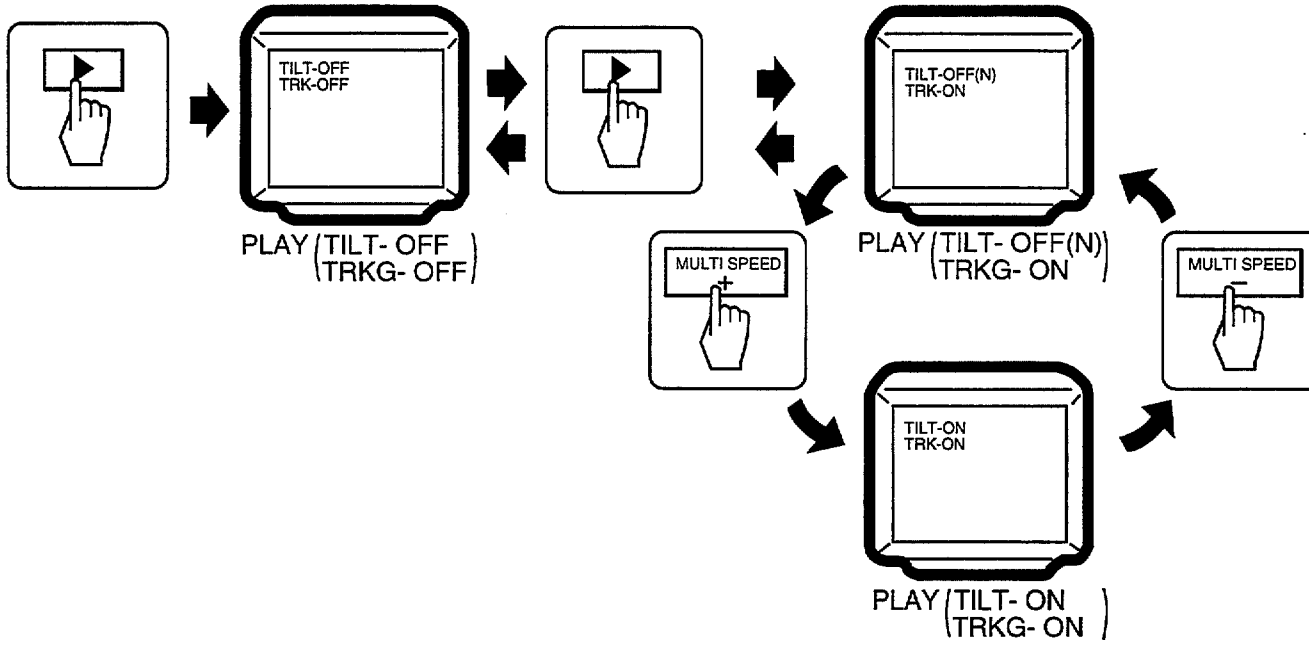

TEST MODE: OFF

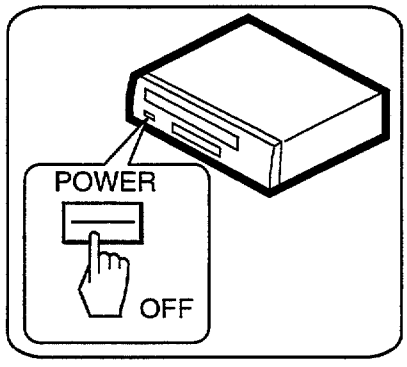

OR

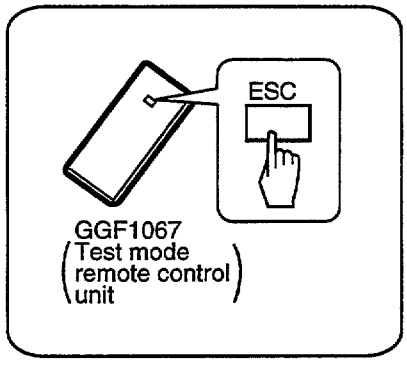

6.4 NECESSARY ADJUSTMENT POINTS（必要な調整項目）

When（このような時）	Adjustment Points	
■ EXCHANGE MECHANISM ASSY PARTS （メカASSY部品を交換したとき）		
Exchange pickup (ピックアップを交換したとき)	Mechanical point	❶,❷,❸,❹,❺,❻,❼,❽,❾
	Electric point	———
Exchange spindle motor (スピンドルモータを交換したとき)	Mechanical point	❸,❽
	Electric point	———
■ EXCHANGE PCB ASSY （PCB ASSYを交換したとき）		
Exchange board MOTHER ASSY (マザーボードを交換したとき)	Mechanical point	❶,❹,❺,❻,❾
	Electric point	———

Note : ① and ② are adjusted already. (①,②は調整済)

6.5. MECHANICAL ADJUSTMENT (機構系の調整)

❶ Tilt Offset Adjustment
(チルトオフセット調整)

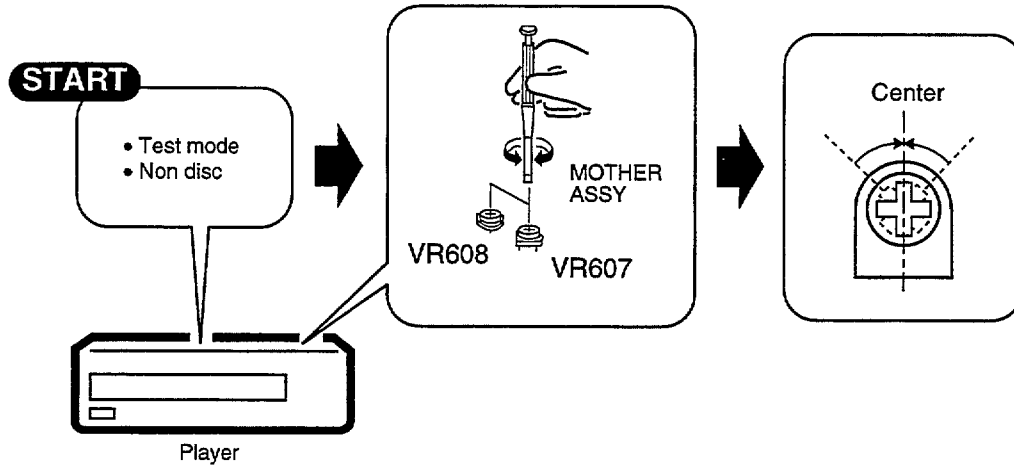

❷ Tangential Direction Angle Adjustment for Side A
(A面タンジェンシャル傾き調整)

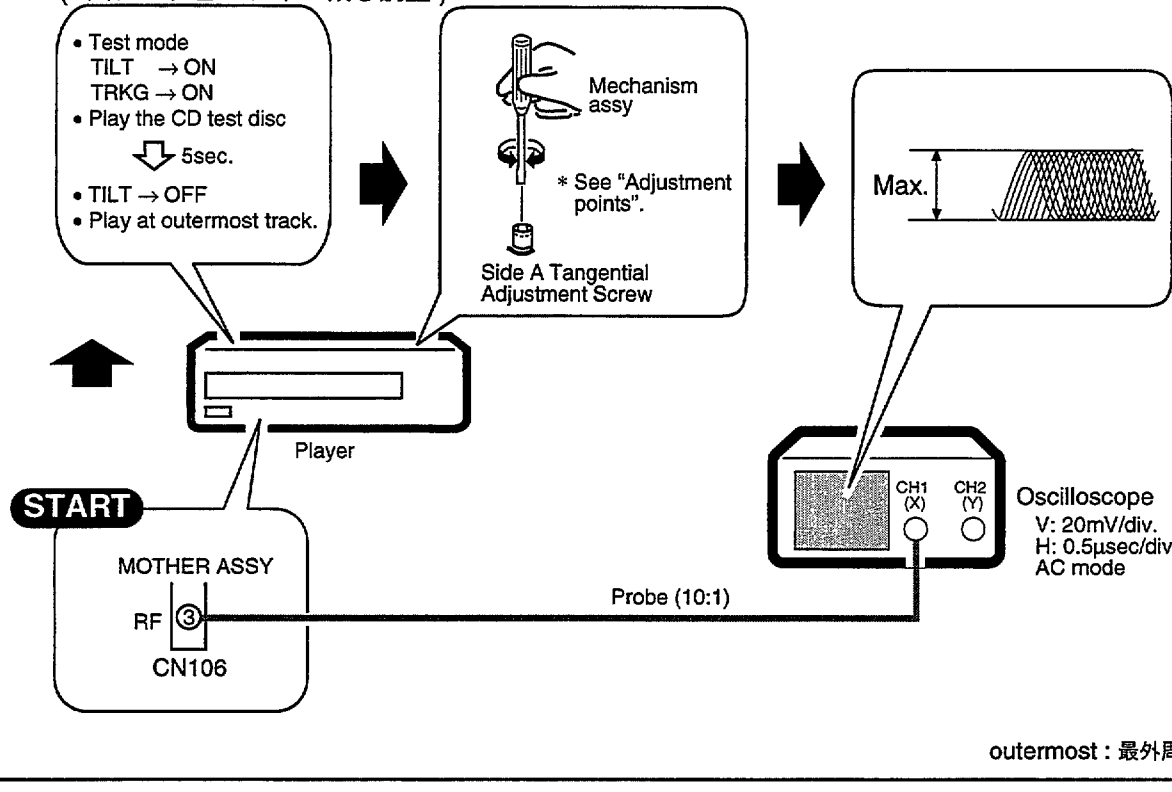

outermost : 最外周

3 Spindle Motor Centering Adjustment for Side A
(A面スピンドル芯出し調整)

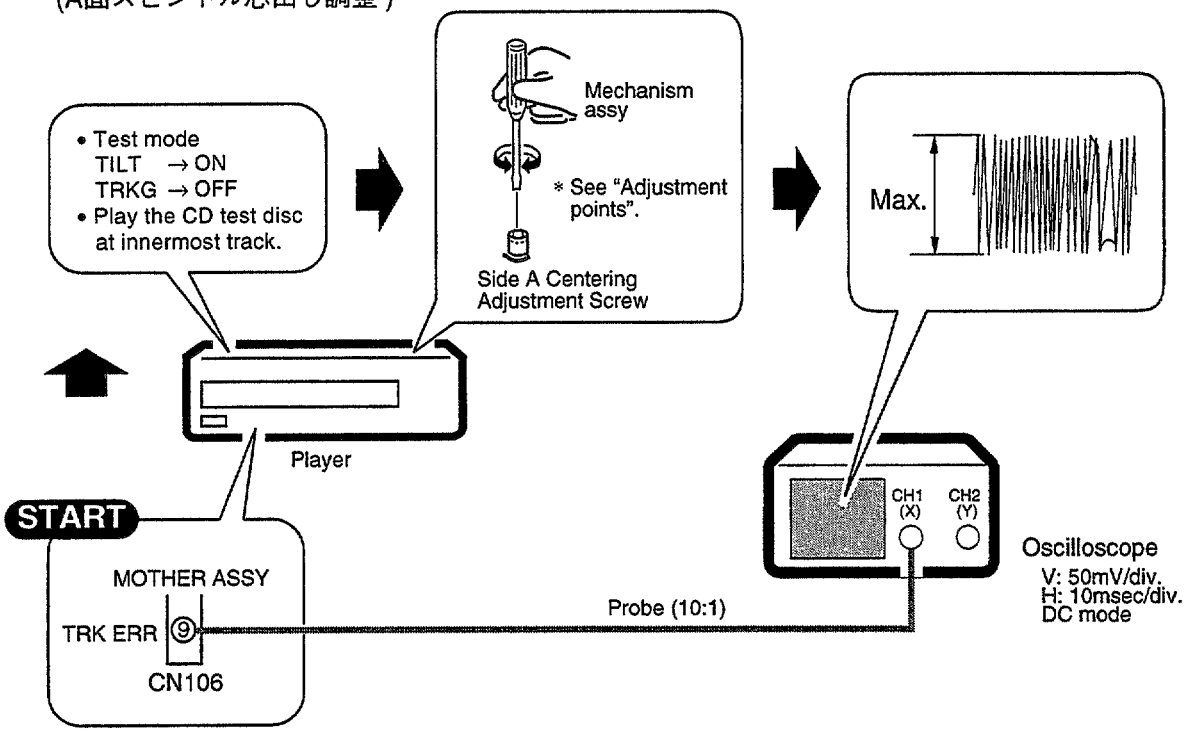

innermost : 最内周

4 Crosstalk Check and Fine Tilt Offset Adjustment for Side A
(A面クロストーク確認及び、チルトオフセット微調)

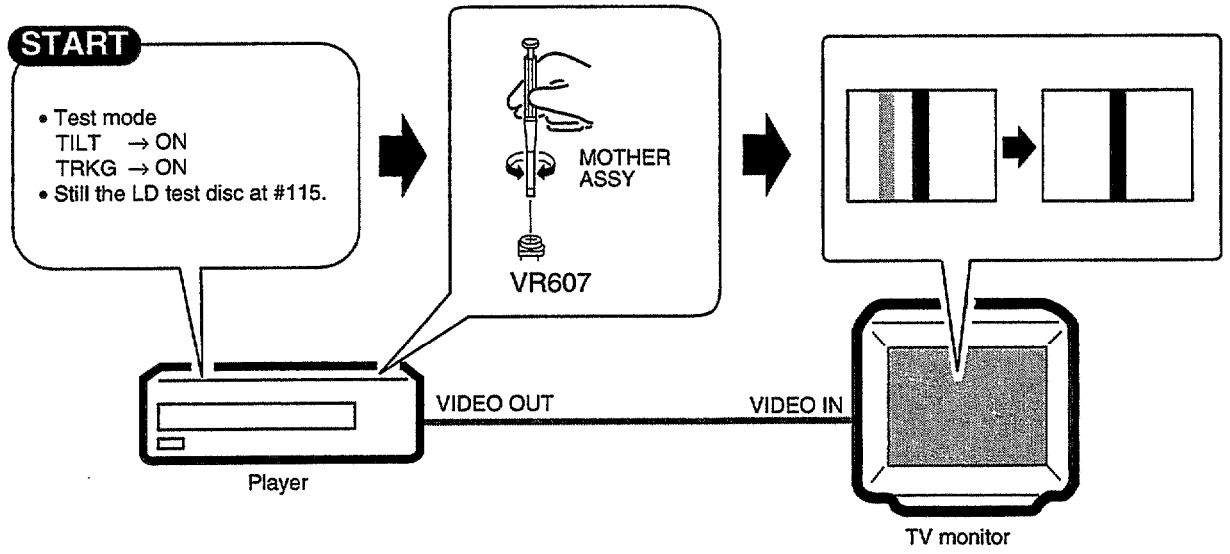

5 Focus Servo Loop Gain Adjustment
(フォーカスサーボループゲイン調整)

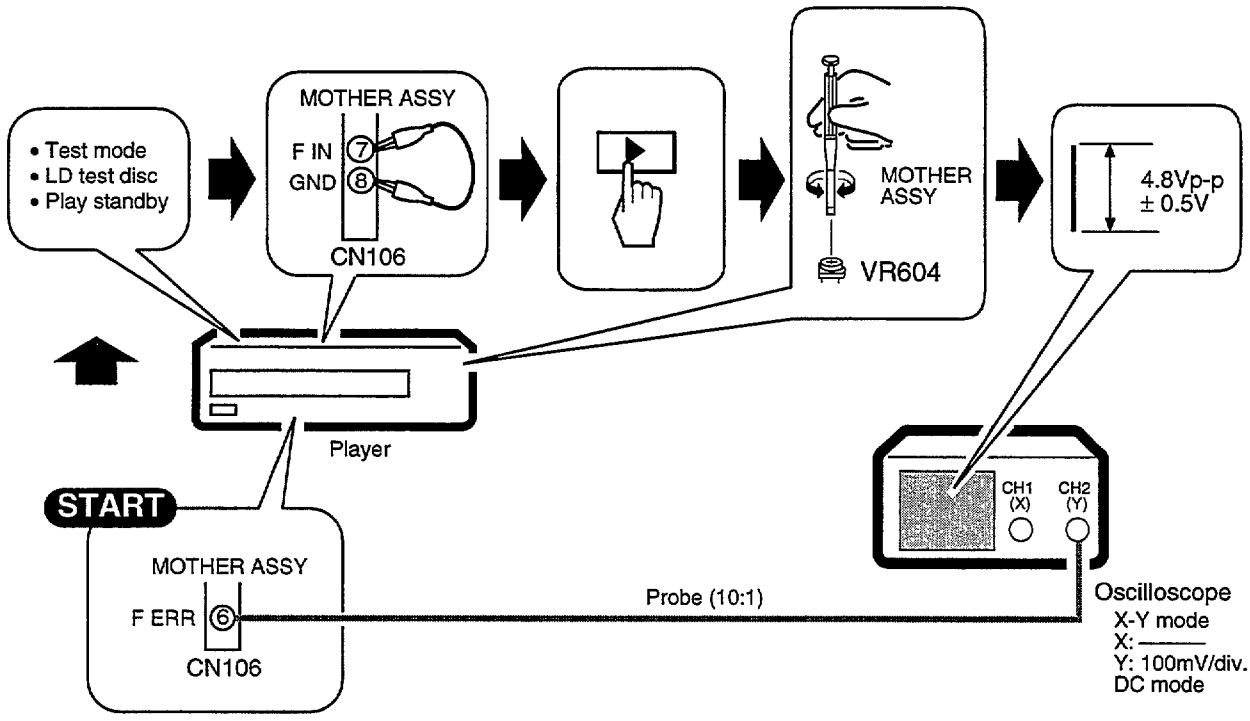

6 Tracking Servo Loop Gain Adjustment
(トラッキングサーボループゲイン調整)

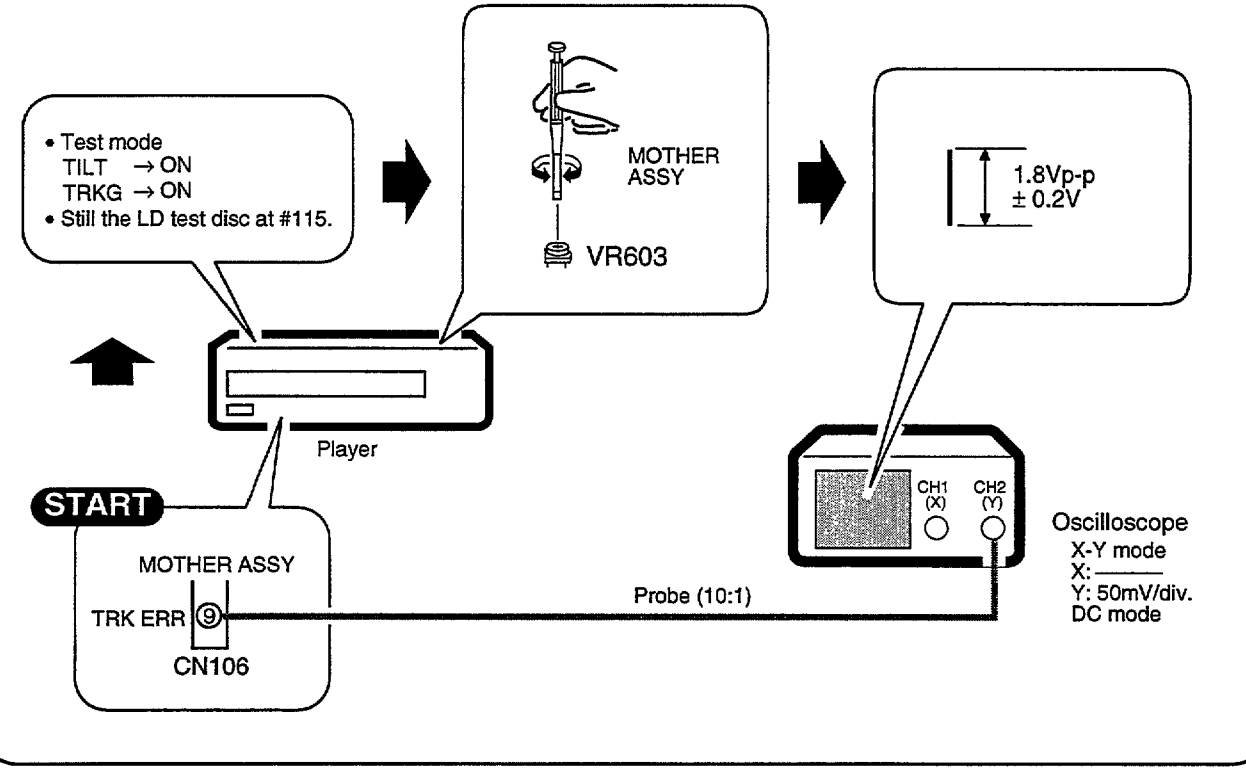

7 Tangential Direction Angle Adjustment for Side B
(B面タンジェンシャル傾き調整)

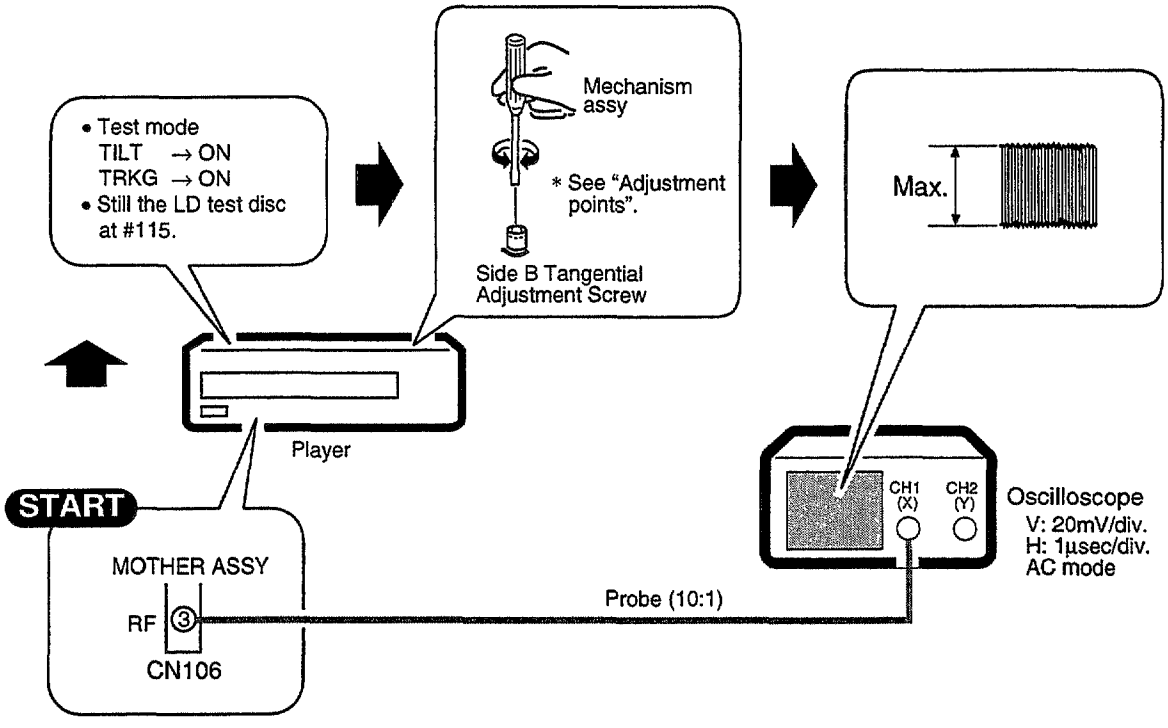

8 Spindle Motor Centering Adjustment for Side B
(B面スピンドル芯出し調整)

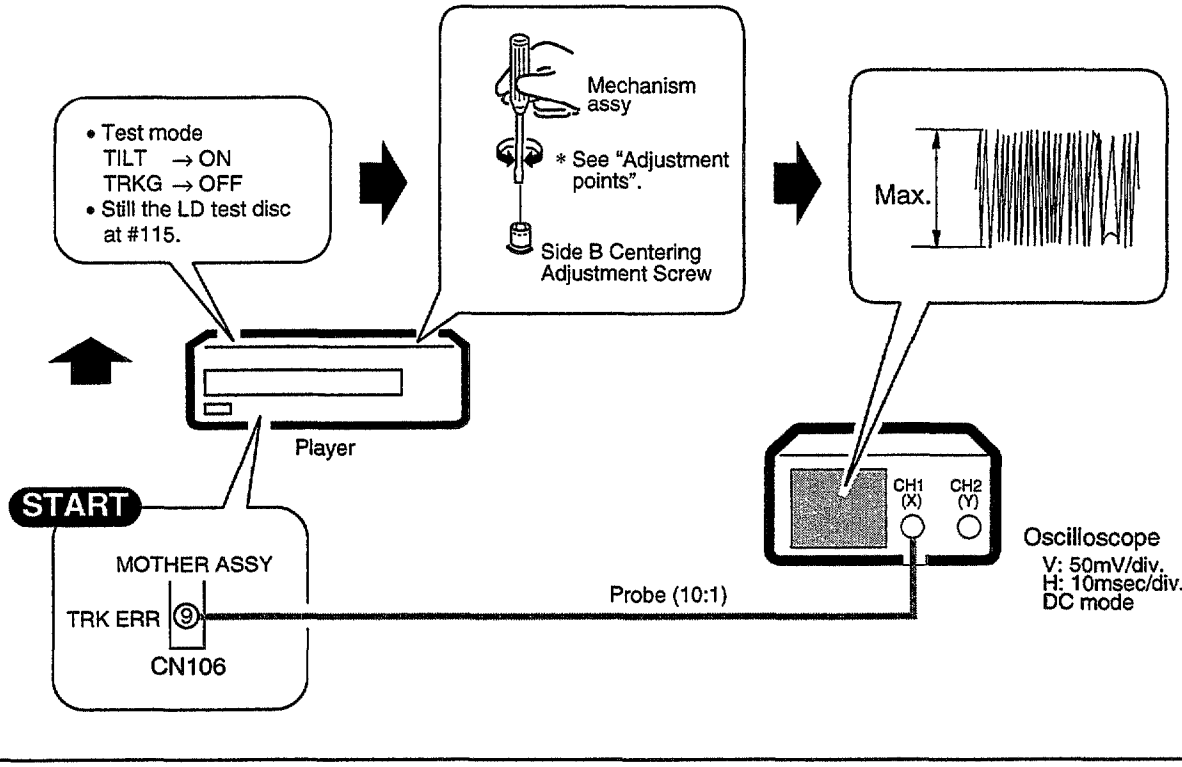

9 Crosstalk Check and Fine Tilt Offset Adjustment for Side B

(B面クロストーク確認及び，チルトオフセット微調)

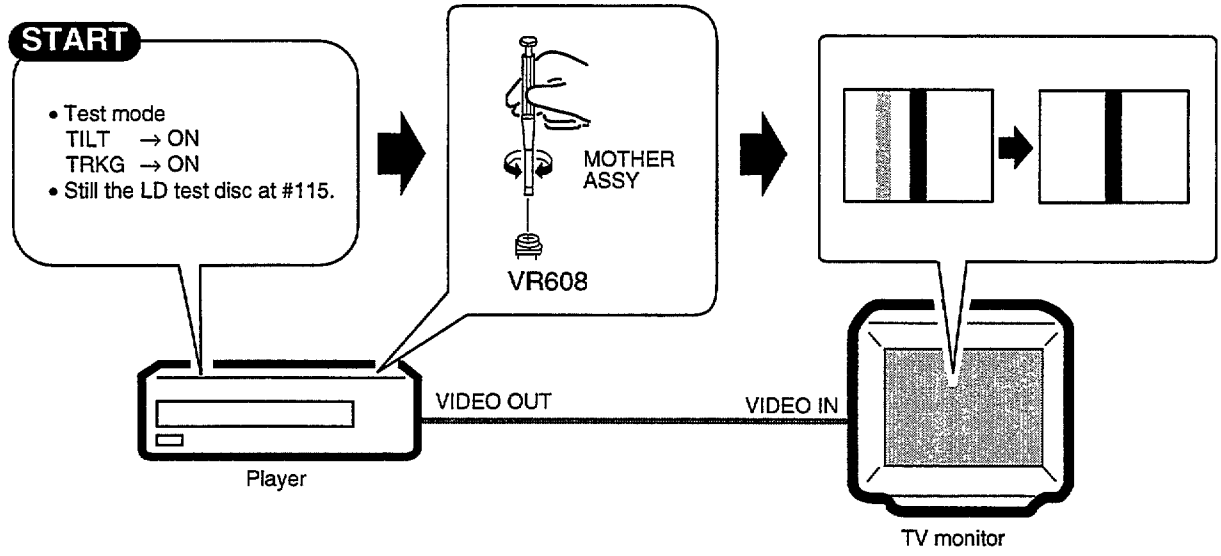

6.6 ELECTRICAL ADJUSTMENT (電気系の調整)

① Master Clock Adjustment
(マスタークロック調整)

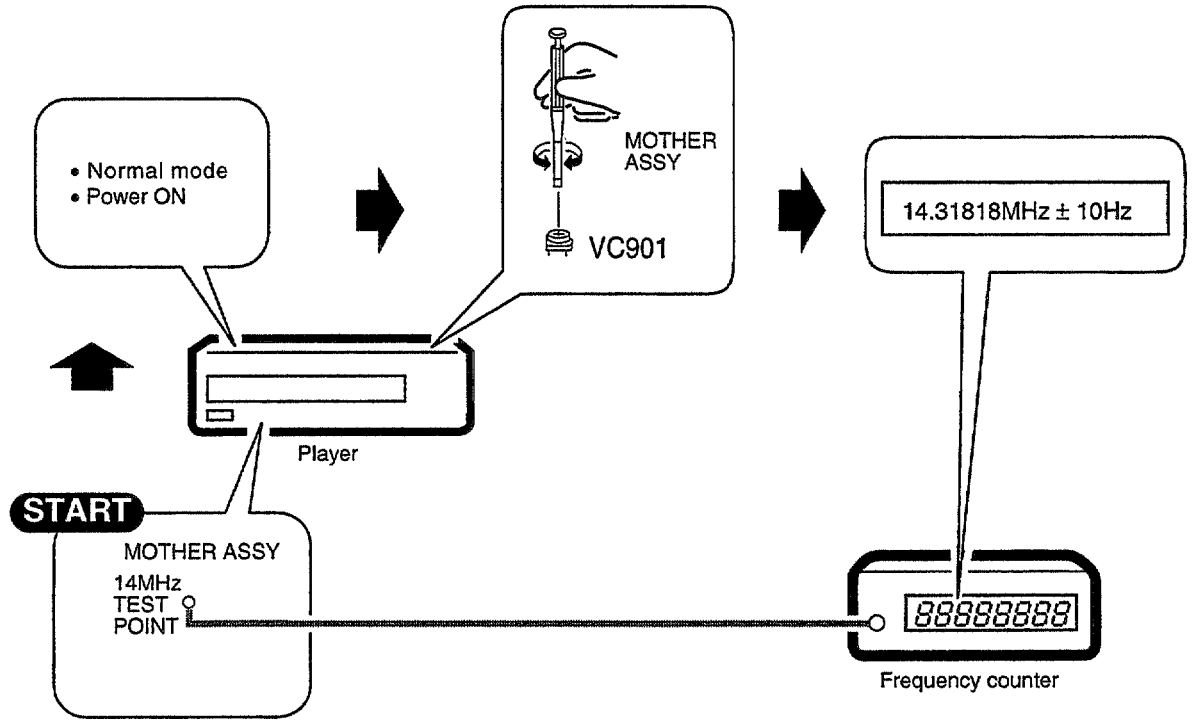

② Output Video Level Adjustment
(出力ビデオレベル調整)

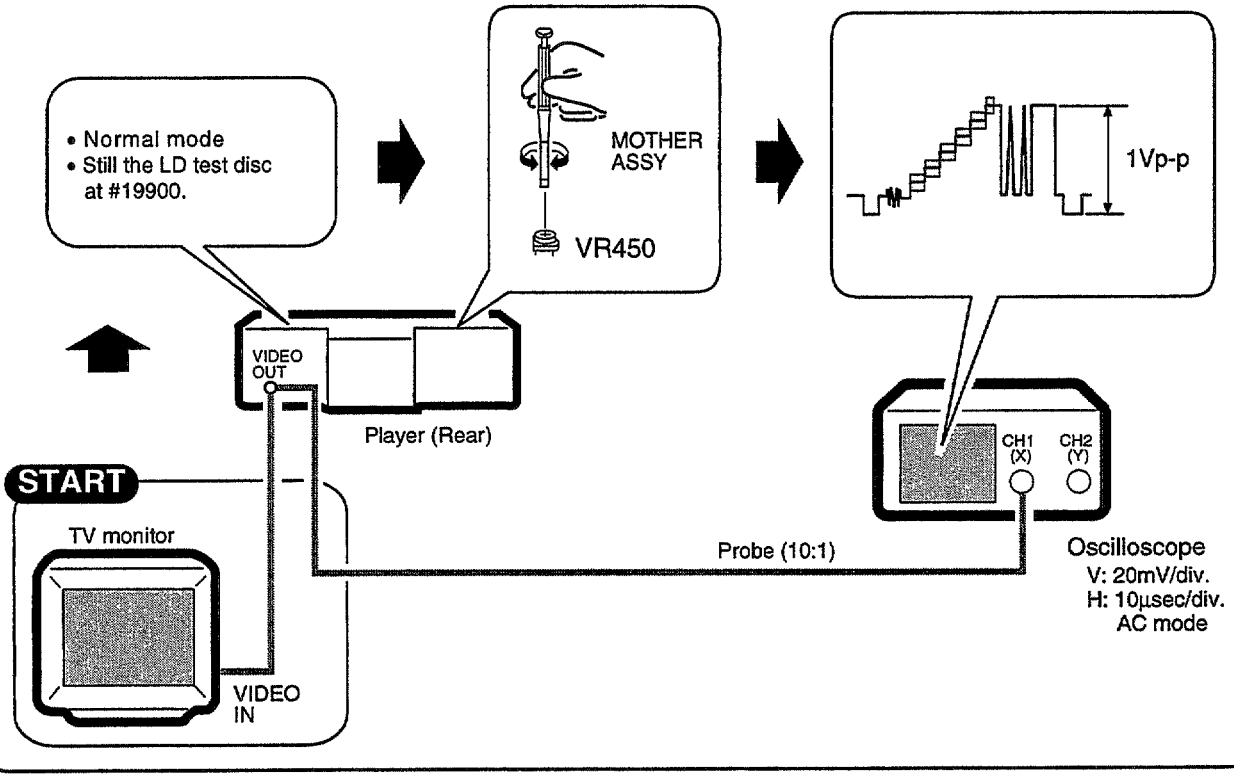

6.7 OPERATIONS IN THE TEST MODE（テストモード時のサービス用リモコン操作方法）

■ Test Mode Remote Control Unit (GGF1067)

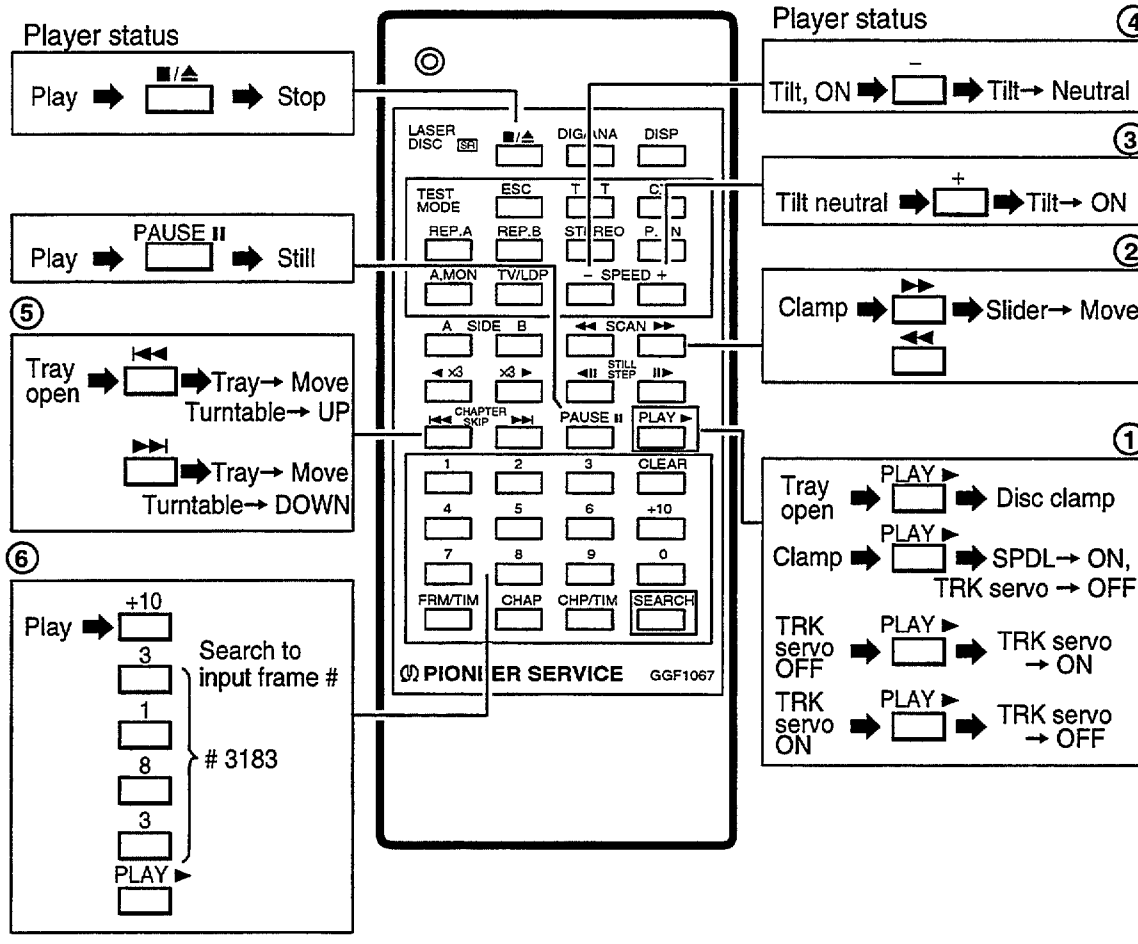

■ TV Monitor Display

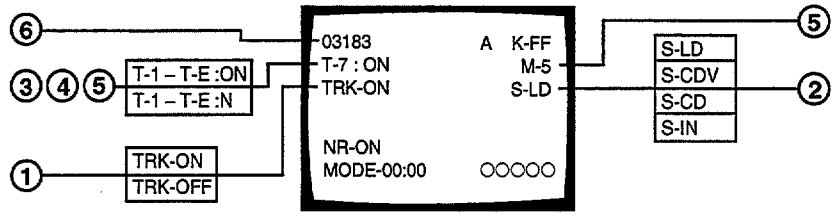

7. GENERAL INFORMATION

7.1 PARTS

7.1.1 IC INFORMATION

• The information in the list is basic information and may not correspond exactly to that shown in the schematic diagrams.

■ PD3350A (FLKB ASSY : IC101)

• MODE CONTROL IC

• Pin Function

No.	Pin Name	I/O	Function
1	MODESEL	I	Mic control input (AD input)
2	ECHO VOL	I	Echo volume data value (AD input)
3	ONTA BAL	I	Vocal volume data value (AD input)
4	MODE SW	I	Mode switch (Normal, Karaoke, External) (AD input)
5	AVss	I	GND
6	TEST	I	GND
7	X2	O	Not used (N.C)
8	X1	I	GND
9	Vss	I	GND
10	OSC1	I	Oscillator (8MHz)
11	OSC2	O	
12	XRESET (IN)	I	CPU reset (L : reset)
13	SHAKE (ACK)	I/O	Mech. control communication requirement input (mode control communication permission output)
14	SEL IR	I	Remote control input
15	V-CD	O	VCD control communication requirement input (mode contol communication permission output)
16	POWER	O	Mother board power supply switching output
17	EFLG	I	For measuring error rate
18	FSX	I	For measuring error rate
19	MICSENSE	I	Mic input
20	XSSVC	O	Stereo voice canceler at marking (L : ON)
21	XMICON	O	Mic line switch (L : ON, H : OFF)
22	MIC1/XMIC2	O	Mic input switch (L : MIC1, H : MIC2)
23	XINT/EXT	O	Analog audio switch (L : player , H : External input)
24	BATTLE	O	Karaoke battle mic switch (L : at normal, H : at karaoke battle)
25	THRU (DASP7)	I	H : through the digital audio L : DSP input of the digital audio
26	I/O CLKOC1	O	I/O expander clock output (for IC201)
27	I/O DATA1	O	I/O expander data output (for IC201)
28	P4/1	O	Not used (N.C)
29	DOG FOOD	O	Pulse output for WATCH DOG
30	M	O	Display segment output
31	L		
32	K		
33	J		
34	I		
35	H		
36	G		
37	F		
38	E		
39	D		
40	VDISP	I	FL power supply (-29V)
41	C	O	Display segment output
42	B		
43	A		
44	G1	O	Display grid output
45	G2		
46	G3		
47	G4		
48	G5		
49	G6		
50	G7		
51	G8		
52	P7/3	I	Not used (+5V)
53	P7/4	O	Not used (N.C)
54	P7/5		
55	P7/6		
56	P7/7		
57	VCC	I	Power supply (+5V)
58	I/O DATA3	O	I/O expander data output (for IC701)
59	I/O DATA2	O	I/O expander data output (for IC702)
60	I/O CLKOC2	O	I/O expander clock output (for IC701, IC702)
61	LD/VCD	O	LD/VCD display switch (H : LD, L : VCD)
62	P8/4	O	Not used (N.C)
63	MUTE	O	Data mute output of graphics decoder
64	CDGM	O	Graphics mode input of graphics decoder
65	G-CS	O	Graphics decoder (PDC016A) communication requirement output
66	C-CS	O	Colorling IC communication requirement output
67	XSCK	I/O	Serial communication clock
68	S-MTOF	I	Serial communication data input
69	S-FTOM	O	Serial communication data output
70	XRESET (OUT)	O	Mother board reset output
71	XCS	O	Communication requirement output of character generator (PD0198A)
72	XDRDY (DASP7)	I	DSP (PM0007A) L : data reception OK
73	XREQ (DASP7)	I	DSP (PM0007A) L : data transmission OK
74	A/D (DASP7)	O	Transmission data switch of DSP (PM0007A) (H : address, L : data)
75	CS (DASP7)	O	DSP (PM0007A) communication requirement output
76	AVcc	I	+5V
77	KIN0	I	Key data input (AD input)
78	KIN1		
79	KIN2		
80	Model select	I	Model select switch port (AD input)

■ PD0245A2 (MOTHER ASSY : IC101)

• MECHANISM CONTROL IC

• Pin Arrangement (Top View)

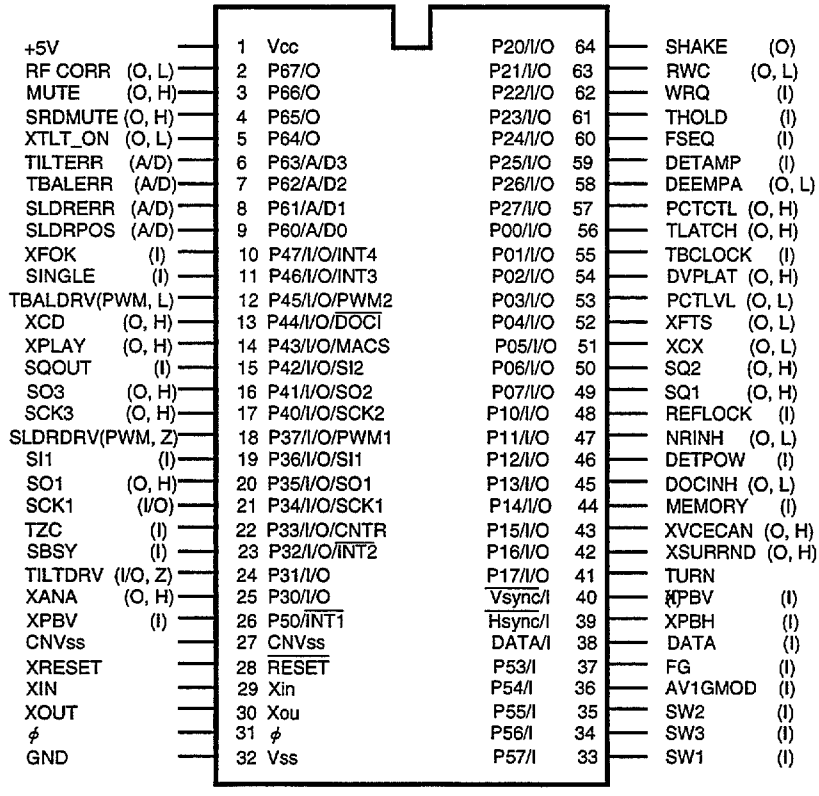

• Pin Function

No.	Pin Name	I/O	Function
1	VCC	I	Power supply pin Apply 5V±10%
2	RFCORR	O	RF correction switch signal output H : Gain UP CD, CDV-A : Low, CAV inner circuit gain up, others are High
3	MUTE	O	Audio mute control signal output of audio system L : Release MUTE H : MUTE
4	SRDMUTE	O	Mute control signal output for AC3 Release MUTE during playback. L : Release MUTE H : MUTE
5	XTLT ON	O	Tilt operation information L : During operation In the OPEN/CLOSE, the voltage will up about 10% by using this port.
6	TILTERR	I A/D	This signal is A/D converted as the tilt servo control input. Control the tilt motor so that this signal becomes 2.5V.
7	TBALERR	I A/D	Tracking balance error signal input This signal is A/D converted as the tracking offset control input.
8	SLDERR	I A/D	This signal is A/D converted as the slider servo control input. Control the tilt motor so that this signal becomes 2.5V.
9	SLDPOS	I A/D	Pickup position detection switch input Detect the position by reading A/D input value which each switches are resistance divided.
10	XFOK	I	Focus servo lock signal input L : Lock H : Unlock Use for lock detection of focus servo.
11	SINGLE	I	This information transmit to mode control by communication. L : Port high H : Port low Use for the signal mode
12	TBALDRV	O PWM	Output the tracking offset signal to PWM output, then use for auto tracking offset. 910 μsec period, tri-state control H, L, Z
13	XCD	O	LD/CD switch signal output L : CD H : LD
14	XPLAY	O	Signal output during spindle servo L : During servo H : During acceleration, brake and stop
15	SQOUT	I	Command data input from DSP Read out SUBQ
16	SO3	O	Serial 3 data signals output Serial signals are common used and signal distinguishes from the latch signals (DVPLAT and TLAT).
17	SCK3	O	Serial 3 clock signals output
18	SLDDRV	O PWM	Slider control signal output 5V=FWD, 0V=REV, 2.5V=STOP 910 μsec period, tri-state control H, L, Z

No.	Pin Name	I/O	Function
19	SI1	I	Data input from the mode control IC
20	SO1	O	Serial data output to the mode control IC
21	SCK1	I/O	Clock for serial communication with the mode control IC Becomes input mode without communicate with the mode control IC
22	TZC	I INT	Tracking error zero cross signal input Monitor this signal when searching track count in the miss clamp detection.
23	SBSY	I	Interrupt input for reading sub-code Q data from DSP
24	TILTDRV	I/O	LOAD/TILT control output 0.5V-Tray IN, OUT/Tilt DOWN, UP 2.5V-STOP Use for tilt servo that tilt drive is PWM output.
25	XANA	O	Digital/Analog audio switch signal output L : Analog H : Digital
26	XPBV	I	Playback vertical sync. signal input of LD/CDV L : During vertical sync.
27	CNVss	I	Ground for A/D conversion
28	XRESET	I	Reset signal input L : Reset H : Release reset Mode control is controlled.
29	XIN	I	9MHz clock oscillation input
30	XOUT	O	9MHz clock oscillation output
31	N.C.	O	Not used
32	GND	I	Ground
33	SW1	I	Switch input for Loading/Tilt position detection
34	SW3		
35	SW2		
36	AV1GMOD	I	AV1 gijutu mode When this port set to H, unti-shock control will be effective by Address C-bit2 from the mode control.
37	FG	I	Spindle motor FG signal input 16 outputs per rotation Used after dividing by 2 in microprocessor
38	DATA	I	Input pin for Phillips code decoder with built in mechanism controller
39	XPBH	I	Playback H-SYNC input for Phillips code decoder
40	XPBV	I	Playback V-SYNC input for Phillips code decoder
41	TURNA	I	Turn switch input H : side A L : side B
42	XSURRND	O	Surround control H : OFF L : ON
43	XVCECAN	O	Voice cancel output H : OFF L : Cancel
44	MEMORY	I	Memory model discrimination H : Memory model L : Non-memory model
45	DOCINH	O	Control the clamp pulse and clamp killer by tri-state value
46	DETPOW	I	Use for power abnormal signal input port. L : Normal H : Abnormal
47	NRINH	O	Control output of the noise reduction switch signal output L : CX ON H : CX OFF
48	REFLOCK	I	Reference signal input from DVP L : Phase not aligned H : Phase aligned (Non-memory)
49	SQ1	O	Analog audio switch signal output 1/L L : Squelch OFF H : Squelch ON
50	SQ2	O	Analog audio switch signal output 2/R L : Squelch OFF H : Squelch ON
51	XCX	O	Analog audio CX noise reduction switch switch signal output L : CX ON H : CX OFF
52	XFTS	O	Serial command output switch signal output of DSP/others L : DSP H : others
53	PCTLVL	O	Signal output for the picture quality adjustment L : SHARP2 (strong) H : SHARP1 (weak)
54	DVPLAT	O	PD0234 serial latch signal output Latches at falling edge.
55	TBCLOCK	I	Spindle lock signal input L : Unlock H : Lock
56	TLATCH	O	DAC & digital filter PD2026B serial control latch signal output Latches at falling edge.
57	PCTCTL	O	Outline correction signal output L : Correction OFF H : Correction ON
58	DEEMPA	O	DSP deemphasis control L : OFF H : ON
59	DETAMP	I	Spindle over-current detection signal input L : Over current H : Normal
60	FSEQ	I	Subcode sync. conformity detection signal input L : Not conformity H : Conformity
61	THOLD	I	Track jump accelerating / decelerating signal input L : other H : accelerating / decelerating
62	WRQ	I	Subcode Q reading OK signal input L : NG H : OK This pin will be H when Subcode Q data passed by CRC check.
63	RWC	O	DSP read / write command signal output L : Read H : Write
64	SHAKE	I/O	Handshake signal for data communication with the mode control IC This pin is the bilateral data line and each microprocessor control the Input / Output.

■ LA7134M (MOTHER ASSY : IC400)

• VIDEO IC

• Block Diagram

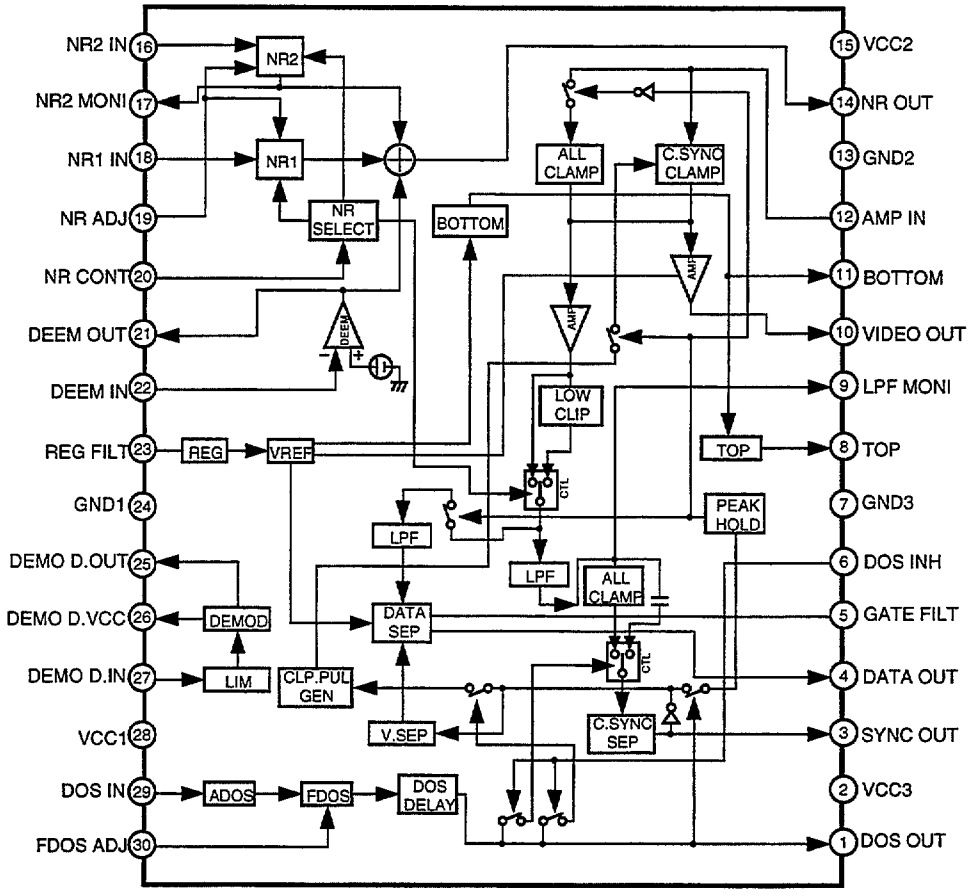

■ PD0234A (MOTHER ASSY : IC500)

• DVP

• Block Diagram

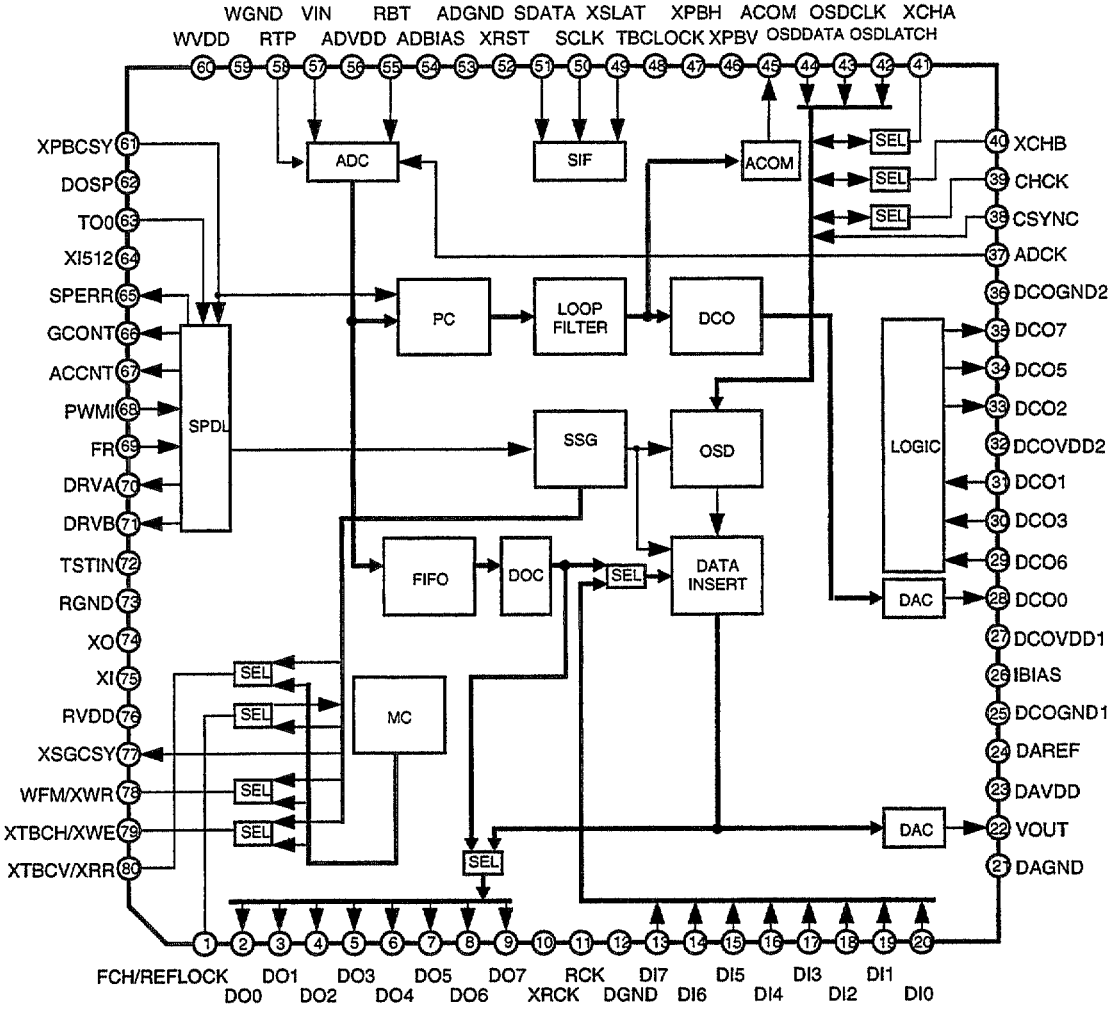

• Pin Function

No.	Pin Name	I/O	Function	
1	FCH	I	MEMSYS:1	Switch the field of SSG by "H"
	REFLOCK	O	MEMSYS:0	Outputs "H" when the phase difference of H/V sync. signal associated with the time-base-corrected video signal and those associated with SSG is small enough.
2	DO0	O	Outputs the digital data of the time-base-corrected video signal for the memory system. When using the internal memory controller (MEMSYS:1 & EXTMC:0), output for field memory and external output are common used. Perform the data output setting with the serial command. DO7 : MSB , DO0 : LSB	
3	DO1			
4	DO2			
5	DO3			
6	DO4			
7	DO5			
8	DO6			
9	DO7			
10	XRCK	O	Inverting outputs the CLK of the reading system. When using the internal memory controller (MEMSYS:1 & EXTMC:0), phase is able to control with the serial command.	
11	RCK	O	Outputs the CLK of the reading system. When using the internal memory controller (MEMSYS:1 & EXTMC:0), phase is able to control with the serial command.	
12	DGND	—	Ground of digital system Connect to GND.	
13	DI7	I	Digital video signal input Outputs the field memory when using the internal memory controller (MEMSYS:1 & EXTMC:0) and inputs the external signal when using the external A/D. DI7 : MSB , DI0 : LSB	
14	DI6			
15	DI5			
16	DI4			
17	DI3			
18	DI2			
19	DI1			
20	DI0			
21	DAGND	—	Ground for DAC Connect to GND.	
22	VOUT	O	DAC output of the time-base-corrected video signal	
23	DAVDD	—	Power supply for DAC Connect to GND.	
24	DAREF	—	Reference pin for DAC Normally, decoupling to the DAGND through the 0.1 μF laminated ceramic capacitor.	
25	DCOGND1	—	Ground for DCO Connect to GND.	
26	IBIAS	—	Current setting pin of the bias circuit Normally, connect to DAGND through the 10kΩ resistor.	
27	DCOVDD1	—	Power supply for DCO Connect to +5V.	
28	DCO0	O	DCO output pin Outputs a fsc in synchronization with the input video signal. This signal is multiplied by 4 to produce CLK of writing system.	
29	DCO6	I	Waveform shaping input pin 6 Inputs a signal obtained by delaying the DCO5 output signal by 35 ns. (to be self biased)	
30	DCO3	I	Waveform shaping input pin 3 Inputs a signal obtained by delaying the DCO5 output signal by 70 ns. (to be self biased)	
31	DCO1	I	Waveform shaping input pin 1 Inputs a DCO0 output signal via the fsc BPF. (to be self biased)	
32	DCOVDD2	—	Power supply for output multiplied by 4 Connect to +5V.	
33	DCO2	O	Waveform shaping input pin 2 Outputs a signal obtained through waveform shaping of the DCO0 output signal.	
34	DCO5	O	Waveform shaping input pin 5 Outputs a signal multiplied by 2.	
35	DCO7	O	Waveform shaping input pin 7 Outputs a signal multiplied by 4.	
36	DCOGND2	—	Ground for output multiplied by 4 Connect to GND.	
37	ADCK	I	CLK input for writing system Inputs DCO7 output signal via a 4fsc BPF. (to be self biased)	
38	CSYNC	I	Composite sync. input for character generator When using the OSD for single (EXTMIX:1), input the composite sync. for generating the character.	
39	CHCK	I	EXTMIX :1	CLK input for character generator Inputs 2fsc.
	CHCK	O	EXTMIX :0	CLK output for character generator Outputs 2fsc.
40	XCHB	O	EXTMIX :1	Blanking signal output
	XCHB	I	EXTMIX :0	Blanking signal input Inputs "L" when inserting the blanking signal.
41	XCHA	O	EXTMIX :1	Character signal output
	XCHA	I	EXTMIX :0	Character signal input Inputs "L" when inserting the character signal.
42	OSDLATCH	I	Latch input for OSD Serial transmission of the OSD control data is able to accept by this pin set to "L".	
43	OSDCLK	I	CLK input for reading the OSD data	

No.	Pin Name	I/O	Function	
44	OSDDATA	I	Control data input for OSD Read the data in synchronization with CLK which input to OSDCLK pin.	
45	ACOM	O	Jitter correction signal output for analog audio Use for cancelling the jitter element of analog audio.	
46	XPBV	O	PB system V sync. output Outputs the signal obtained by separating V sync. signal from the signal at pin 61 (XPBCSY) with negative logic.	
47	XPBH	O	PB system H sync. output Outputs the signal obtained by separating H sync. signal from the signal at pin 61 (XPBCSY) with negative logic.	
48	TBCLOCK	O	PLL lock detection signal output Outputs "H" when the spindle loop and the TBC loop are locked.	
49	XSLAT	I	Serial interface latch input Gives the latch timing for data applied to the serial interface. Latches at "L".	
50	SCLK	I	CLK input for the serial interface SDATA value will be read at the rising edge.	
51	SDATA	I	Data input pin for the serial interface	
52	XRST	I	System reset input Input for initializing the internal register of IC with negative logic.	
53	ADGND	—	Ground for ADC Connect to GND.	
54	ADBIAS	—	NC or connect to ADGND.	
55	RBT	I	ADC bottom reference input Gives the bottom reference voltage of ADC.	
56	ADVDD	—	Power supply for ADC Connect to +5V.	
57	VIN	I	ADC input Inputs the composite video signal.	
58	RTP	I	ADC top reference input Gives the top reference voltage of ADC.	
59	WGND	—	Ground for writing system Connect to GND.	
60	WVDD	—	Power supply for writing system Connect to +5V.	
61	XPBCSY	I	Inputs the composite sync. signal of PB system with negative logic.	
62	DOSP	I	Inputs the dropout detection pulse with positive logic.	
63	TO0	I	Inputs the tracking-servo open signal with positive logic.	
64	XI512	O	Outputs a 1/512th division of the CLK of reading system.	
65	SPERR	O	PFD error output of the spindle error It outputs the result of comparison (PFD) between PBH and reading system H in tristate.	
66	GCONT	O	Spindle gain control output Outputs a PWM signal according to the serial-command specified value.	
67	ACCNT	O	Acceleration control output Tristate output of the acceleration/deceleration signal, which depends either on the forced acceleration/deceleration signal, the error detection by serial command or error detection by H sync. signal.	
68	PWMI	I	Spindle error PWM input Inputs a signal obtained through the voltage comparison between the spindle error signal which has passed through a loop filter and the chopping wave.	
69	FR	I	Spindle error direction element input Inputs a signal obtained through the voltage comparison between the spindle error which has passed through a loop filter and the destination voltage.	
70	DRVA	O	Output for driving the spindle motor driver It is applicable to either a brush or brushless motor, selection of which is by a serial command.	
71	DRVB			
72	TSTIN	I	Input for IC test Fixed to "L".	
73	RGND	—	Ground for reference system Connect to GND.	
74	XO	O	Connect the X'tal. Connect the 8fsc when using the internal memory controller (MEMSYS:1 & EXTMC:0) and the 4fsc is at others.	
75	XI	I		
76	RVDD	—	Power supply for reference system Connect to +5V.	
77	XSGCSY	O	Internal SSG composite sync. output Outputs the composite sync. signal of the internal SSG with negative logic. It can be delayed by a serial command with a specified delay duration.	
78	WFM	O	MEMSYS:1 & EXTMC:1	Field monitor output of write system Outputs "H" for the odd field.
	XWR	O	MEMSYS:1 & EXTMC:0	Write reset output Outputs a signal to initializing the writing address of field memory. Outputs "L" pulse for 1CLK on every field of write system. Connect to XWRST input of field memory.
79	XTBCH	O	MEMSYS:1 & EXTMC:1	TBC H sync. output Outputs the time-base-corrected H sync. signal with negative logic.
	XWE	O	MEMSYS:1 & EXTMC:0	Write enable output Control the writing operation of field memory. "L" for enable and "H" for disenable. Connect to XWE input of field memory.
80	XTBCV	O	MEMSYS:1 & EXTMC:1	TBC V sync output Outputs the time-base-correcter V sync. signal with negative logic.
	XRR	O	MEMSYS:1 & EXTMC:0	Read reset output Outputs a signal to initializing the reading address of field memory. Outputs "L" pulse for 1CLK on every each field of read system. Connect to XRRST input of field memory.

■ LC78621E (MOTHER ASSY : IC802)

• SERVO CONTROLER & EFM DEMODULATOR

• Block Diagram

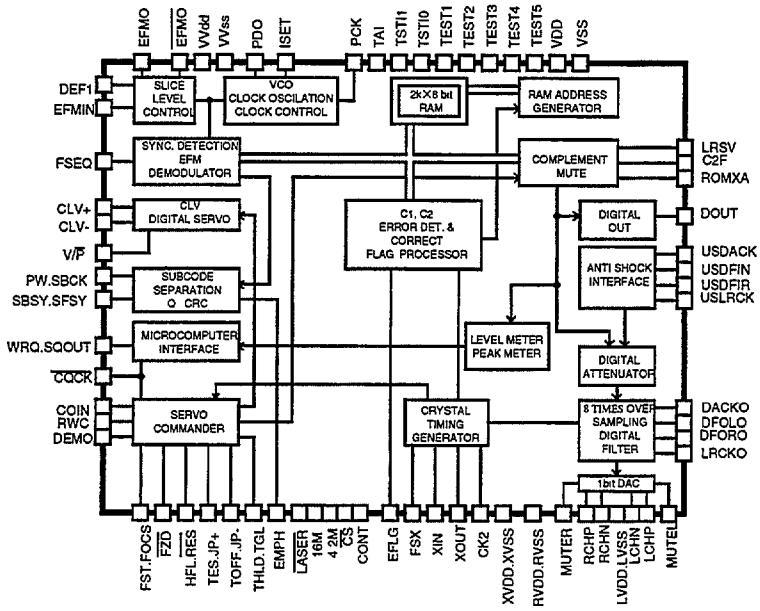

• Pin Arrangement (Top View)

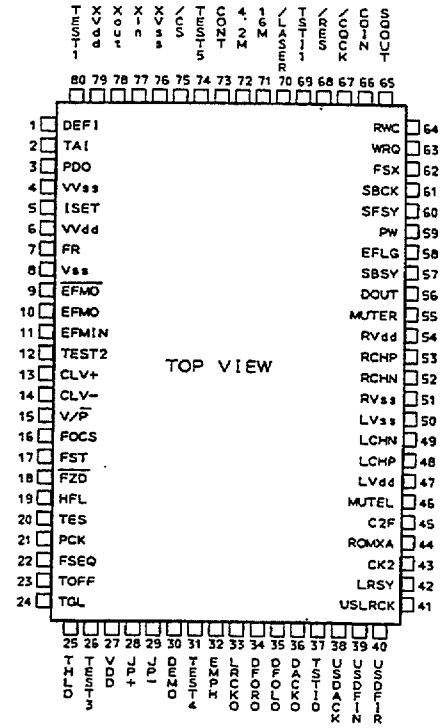

• Pin Function

No.	Pin Name	I/O	Function	
1	DE-FI	I	Defect detection signal (DEF) input pin ("L" at not used)	
2	TAI	I	For PLL	Test input pin with pull-down resistor
3	PDO	O		Phase comparison output for controlling the external VCO
4	V Vss	—		Power supply for PLL and internal VCO Normally, 0V.
5	ISET	AI		Connect a resistor for current adjustment of PDO output
6	V VDD	—		Ground for internal VOO Normally, 5V.
7	FR	AI		For VCO frequency range adjustment
8	Vss	—	Ground for digital system Normally, 0V.	
9	EFMO	O	For slice level control	EFM signal inversion output
10	EFMO	O		EFM signal output
11	EFMIN	I		EFM signal input
12	TEST2	I	Test input pin with pull-down resistor	
13	CLV+	O	Output pin for controlling the spindle servo Acceleration for CLV+ is "H" and Deceleration for CLV- is "H".	
14	CLV-	O	Tristate output is able to output with command	
15	V/P	O	Automatic switching monitor output of rough servo/phase control H : Rough servo , L : Phase control mode	
16	FOCS	O	Output pin for focus servo ON/OFF Focus servo ON for "L"	
17	FST	O	Focus start pulse output (open drain output)	
18	F2D	I	Focus error zerocross signal input ("L" at not used)	
19	HFL	I	Track detection signal input (schmitt input)	
20	TES	I	Tracking error signal input (schmitt input)	
21	PCK	O	Clock monitor output for EFM data playback (4.3218MHz at phase clock)	
22	FSEQ	O	Sync. signal detection output Becomes "H" when the sync. signals between the detected sync. signal from EFM signal and internal generated sync. signal are aligned.	
23	TOFF	O	Tracking OFF output	
24	TGL	O	Output pin for output tracking gain switch Gain up for "L".	
25	THLD	O	Tracking hold output	
26	TEST3	I	Test input pin with pull-down resistor	

No.	Pin Name	I/O	Function
27	VDD		Power supply for digital system Normally, 5V.
28	JP+	O	Output pin for track jump When JP+ is "H" , Acceleration in the outer direction jump or Deceleration in the inner direction jump.
29	JP-		When JP- is "H" : Acceleration in the inner direction jump or deceleration in the outer direction jump.
			Tristate output is able to output with the bcommand.
30	DEMO	I	Sound output function input for the player adjustment with pull-down resistor
31	TEST4	I	Test input pin with pull-down resistor
32	EMPH	O	Deemphasis monitor output H : during playback the deenphasis disc
33	LRCKO	O	Digital filter output — Word clock output
34	DFORO		Digital filter output — R ch data output
35	DFOLO		Digital filter output — L ch data output
36	DACKO		Digital filter output — Bit clock output
37	TST10	O	Test output pin Open (Normally, output "L")
38	USDACK	I	Antishock correspondence input ("L" at not used) — Bit clock input
39	USDFIN		Antishock correspondence input ("L" at not used) — L ch and R ch data
40	USDFIR		Antishock correspondence input ("L" at not used) — Test input pin Normally, "L".
41	USLRCK	I	Antishock correspondence Input word clock input ("L" at not used)
42	LRSY	O	ROMXA correspondence output — L/R clock output
43	CK2		ROMXA correspondence output — Bit clock output / DACLK (at RES) / Polarity inversion (CK2COK mode)
44	ROMXA		ROMXA correspondence output — Data output / Data (complement) (at RES) / ROMOUT (ROMXA mode)
45	C2F		ROMXA correspondence output — C2 flag output
46	MUTEL	O	For1bit DAC — Mute output
47	L VDD		For1bit DAC — Power supply for L ch Normally, 5V.
48	LCHP	O	For1bit DAC — L ch P output
49	LCHN	O	For1bit DAC — L ch N output
50	LVSS		For1bit DAC — Ground for L ch Normally, 0V.
51	RVSS		For1bit DAC — Ground for R ch Normally, 0V.
52	RCHN	O	For1bit DAC — R ch N output
53	RCHP	O	For1bit DAC — R ch P output
54	RVDD		For1bit DAC — Power supply for R ch Normally, 5V.
55	MUTER	O	For1bit DAC — Mute output
56	DOUT	O	Digital OUT output
57	SBSY	O	Perion signal output of subcode block
58	EFLG	O	Correction monitor output of C1, C2, single and double
59	PW	O	Subcode P, Q, R, S, T, U and W output
60	SFSY	O	Period signal output of subcode frame Rise down when the subcode is stndbyed.
61	SBCK	I	Subcode reading clock input (schmitt input)
62	FSX	O	7.35kHz sync. signal output which is divided the frequency from the crystal resonator.
63	WRQ	O	Standby output of subcode Q output
64	RWC	I	Read / Write control input
65	SQOUT	O	Subcode Q output
66	COIN	I	Command input from the microcomputer
67	CQCK	I	Command input take in clock or subcode take out clock input from SQOUT (schmitt input)
68	RES	I	Chip reset input Once turn to "L" at the power ON
69	TST11	O	Test input pin Open (Normally, output "L")
70	LASER	O	Laser ON/OFF output Control with the serial data command from the microcomputer
71	16M	O	16.9344MHz output However, output 33.8688MHz in the fourfold speed playback mode.
72	4.2M	O	4.2336MHz output
73	CONT	O	Auxiliary output Control with the serial data command from the microcomputer.
74	TEST5	I	Test input pin with pull-down resistor
75	CS	I	Chip select input with pull-down resistor
76	XVSS		Ground for the crystal resonator Normally, 0V.
77	XIN	I	Connect the 16.9344MHz crystal resonator.
78	XOUT	O	Connect the 33.8688MHz crystal resonator in the fourfold speed playback system.
79	XVDD		Power supply for the crystal resonator Normally, 5V.
80	TEST1	I	Test input pin with pull-down resistor

■ PM0007A (KRAB ASSY : IC101)

- **DASP IC**

- **Pin Arrangement (Top View)**

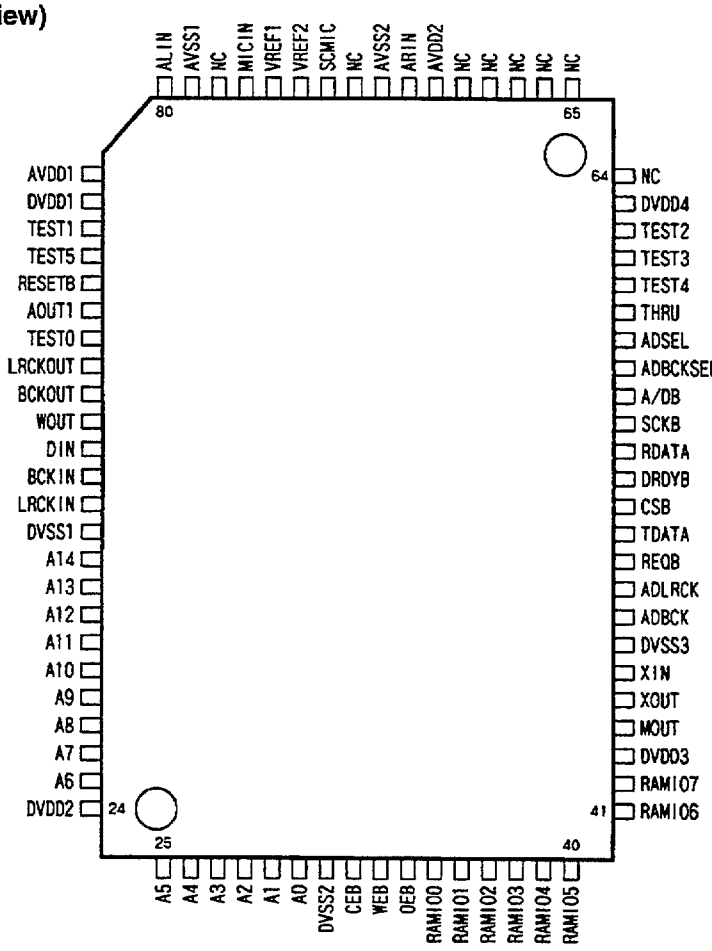

- **Block Diagram**

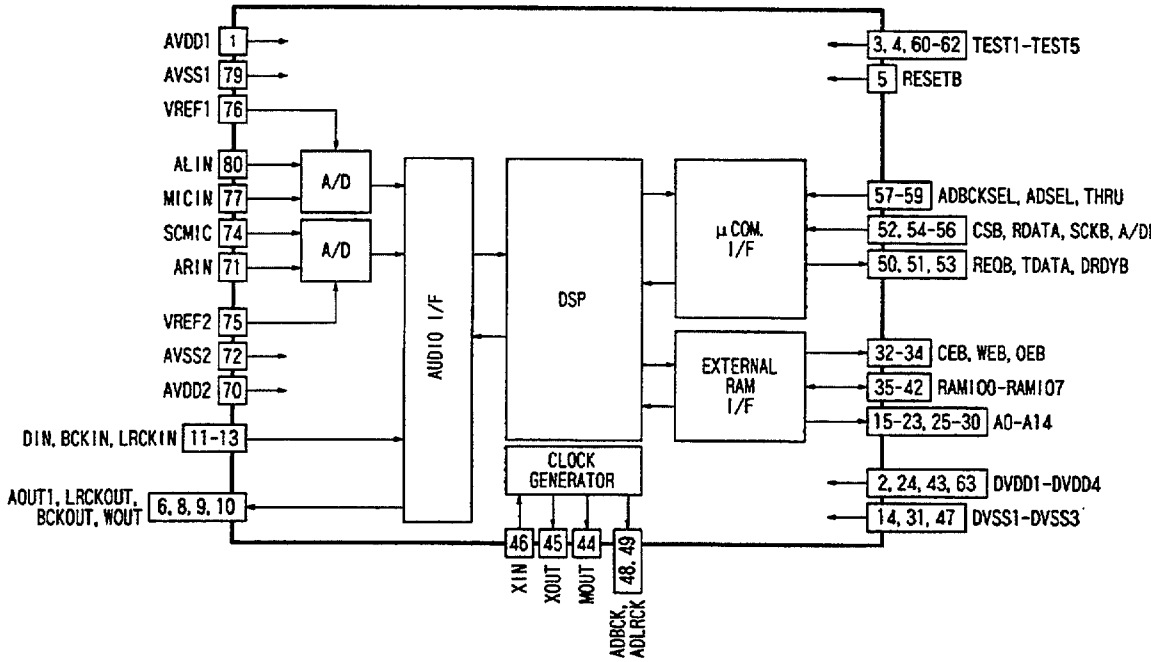

• Pin Function

No.	Name	I/O	Function
1	AVDD1	—	Power supply pin for A/D converter 1
2	DVDD1	—	Power supply pin 1 for logical block
3	TEST1	IC	Selection input pin for test mode Normally fixed at "H".
4	TEST5		
5	RESETB	IS	Reset input pin. Reset when "L"
6	AOUT	OC	Audio serial data output pin 1
7	TEST0	OC	Test data output pin
8	LRCKOUT	OC	LR clock output pin "H" : Lch, "L" : Rch
9	BCKOUT	OC	Bit clock output pin Outputs 32fs
10	WOUT	OC	Word clock output pin
11	DIN	IC	Digital audio input pin
12	BCKIN	IC	Bit clock input pin
13	LRCKIN	IC	LR clock input pin
14	DVSS1	—	Ground pin 1 for logical block
15	A14	OC	Address output pins for external Pseudo - SRAM
16	A13		
17	A12		
18	A11		
19	A10		
20	A9		
21	A8		
22	A7		
23	A6		
24	DVDD2	—	Power supply pin 2 for logical block.
25	A5	OC	Address output pins for external Pseudo - SRAM.
26	A4		
27	A3		
28	A2		
29	A1		
30	A0		
31	DVSS2	—	Ground pin 2 for logical block
32	CEB	OC	Chip enable pin for external Pseudo-SRAM
33	WEB	OC	Write enable pin for external Pseudo-SRAM
34	OEB	OC	Output enable pin for external Pseudo-SRAM
35	RAMIO0	IOD	Data input/output pins for external Pseudo-SRAM
36	RAMIO1		
37	RAMIO2		
38	RAMIO3		
39	RAMIO4		
40	RAMIO5		

No.	Name	I/O	Function
41	RAMIO6	IOD	Data input/output pins for external Pseudo-SRAM
42	RAMIO7		
43	DVDD3	—	Power supply pin 3 for logical block
44	MOUT	OC	Master clock output pin
45	XOUT	OCX	Crystal oscillator connection pin
46	XIN	ICX	
47	DVSS3	—	Ground pin 3 for logical block
48	ADBCK	IC	Bit clock output pin for external A/D converter
49	ADLRCK	IC	LR clock output pin for external A/D converter
50	REQB	OT	Data transfer request output pin for microcomputer.
51	TDATA	OT	Data output pin for microcomputer
52	CSB	IC	Chip select input pin for microcomputer interface
53	DRDYB	OT	Signal receive condition output pin for microcomputer.
54	RDATA	IC	Serial data input pin from microcomputer
55	SCKB	IC	Serial clock input pin for receiving data from microcomputer
56	A/DB	IC	Address/data judgement pin for data from microcomputer
57	ADBCKSEL	IC	Output selection input pin for ADBCK pin 32fs/64fs
58	ADSEL	IC	Digital/Analog audio selection input pin
59	THRU	IC	Setting pin for through mode. Normally fixed at "L"
60	TEST4	IC	Selection input pins for test mode.Normally fixed at "H"
61	TEST3		
62	TEST2		
63	DVDD4	—	Power supply pin 4 logical block
64	NC		Not connected
65	NC		
66	NC		
67	NC		
68	NC		
69	NC		
70	AVDD2	—	Power supply pin for A/D converter 2
71	ARIN	IA	Rch input pin of analog audio
72	AVSS2	—	Ground pin for A/D converter 2
73	NC	—	Not connected
74	SCMIC	IA	Score microphone input pin
75	VREF2	IAR	Reference voltage input pin for A/D converter 2
76	VREF1	IAR	Reference voltage input pin for A/D converter 1
77	MICIN	IA	Microphone input pin
78	NC	—	Not connected
79	AVSS1	—	Ground pin for A/D converter 1
80	ALIN	IA	Lh input pin of analog audio

Note

IC : CMOS input
IOD : TTL input, CMOS output, Built-in pull-down resistor
IAR : Analog input, Reference voltage input
OCX : Oscillator, CMOS output
IS : Schmidt input
IO : TTL input, CMOS output
IA : Analog input
ICX : Oscillator, CMOS input
OT : Tri-state output
OC : CMOS output

■LH5P832N-12 (KRAB ASSY : IC102)

• 256k PSEUDO-SRAM

• Pin Arrangement (Top View)

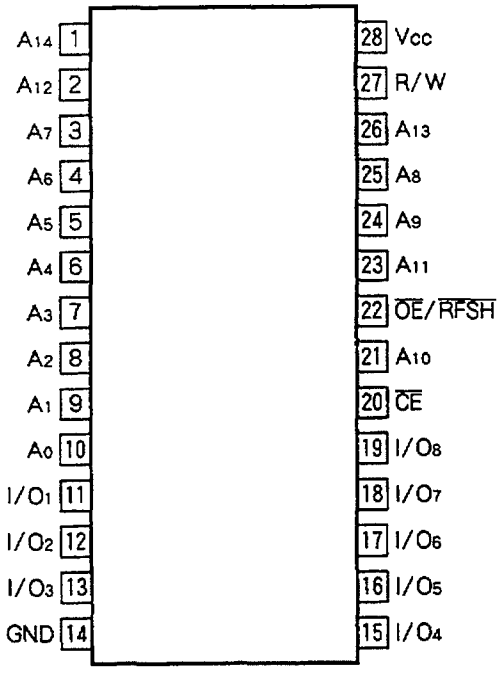

•Pin Function

No.	Pin Name	Function
1~10, 21, 23~26	A_0~A_{14}	Address input
27	R/W	Read/write input
22	$\overline{OE}$/$\overline{RFSH}$	Output enable?refresh
20	$\overline{CE}$	Chip enable
11~13, 15~19	I/O_1~I/O_8	Data input/output
14	GND	Ground
28	Vcc	Power supply

• Block Diagram

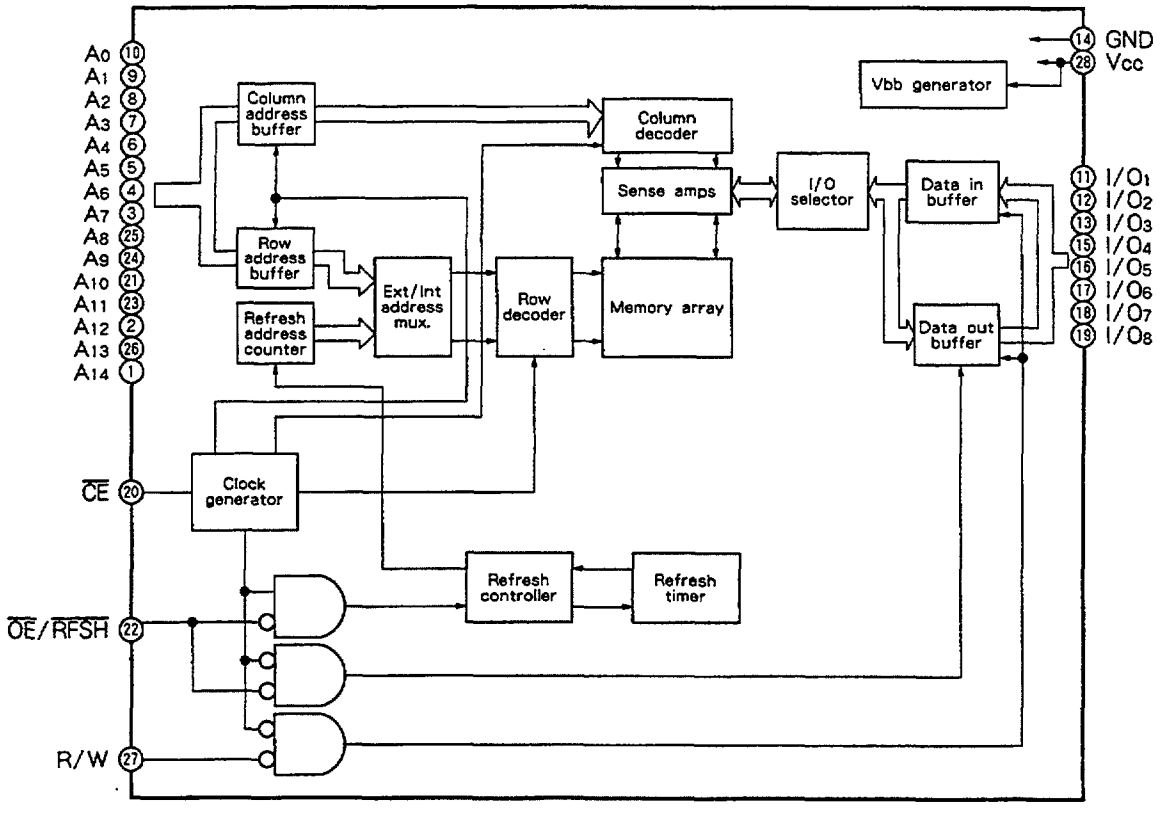

■TC9400F (KRAB ASSY : IC301)

• D/A CONVERTER

• Block Diagram

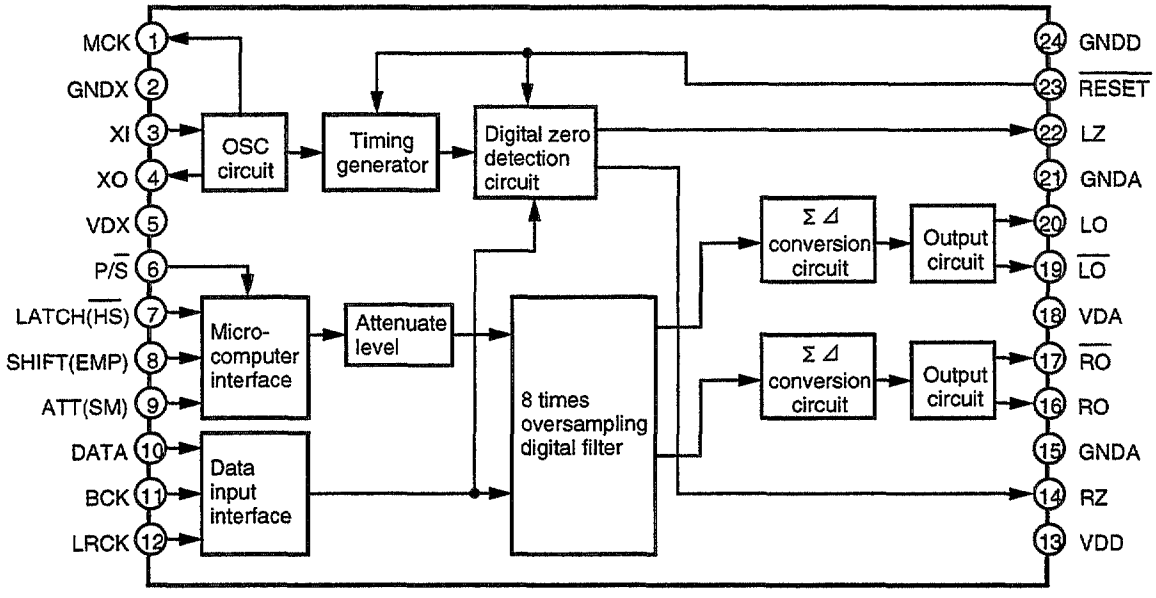

• Pin Function

No.	Pin name	I/O	Function
1	MCK	O	System clock supply pin
2	GNDX	—	Ground pin of oscillation section
3	XI	I	Crystal oscillator connection pin. Generates a clock for system.
4	XO	O	
5	VDX	—	Power supply pin for oscillation section
6	P/$\overline{S}$	I	Parallel/serial control switching pin (Schmitt input and pull-up resistor)
7	LATCH ($\overline{HS}$)	I	In the serial control, data latch signal input pin for attenuator. In the parallel control, normal/double speed mode selection pin. (Schmitt input and pull-up resistor)
8	SHIFT (EMP)	I	In the serial control, shift clock input pin for attenuator. In the parallel control, deemphasis filter ON/OFF control pin. (Schmitt input and pull-up resistor)
9	ATT (SM)	I	In the serial control, data I input pin for attenuator. In the parallel control, soft mute control pin. (Schmitt input and pull-up resistor)
10	DATA	I	Data input pin (Schmitt input)
11	BCK	I	Bit clock input pin (Schmitt input)
12	LRCK	I	LR clock input pin (Schmitt input)
13	VDD	—	Power supply pin for digital section
14	RZ	O	R-ch digital zero detection output pin
15	GNDA	—	Ground pin for R-ch analog section
16	RO	O	R-ch data positive-phase output pin
17	$\overline{RO}$	O	R-ch data negative-phase output pin
18	VDA	—	Power supply pin for analog section
19	$\overline{LO}$	O	L-ch data negative-phase output pin
20	LO	O	L-ch data positive-phase output pin
21	GNDA	—	Ground pin for L-ch analog section
22	LZ	O	L-ch digital zero detection output pin
23	$\overline{RESET}$	I	Reset signal input pin
24	GND	—	Ground pin

■ PD0239A (GRPB ASSY : IC201)

• COLOR ADDITION PROCESSOR

• Block Diagram

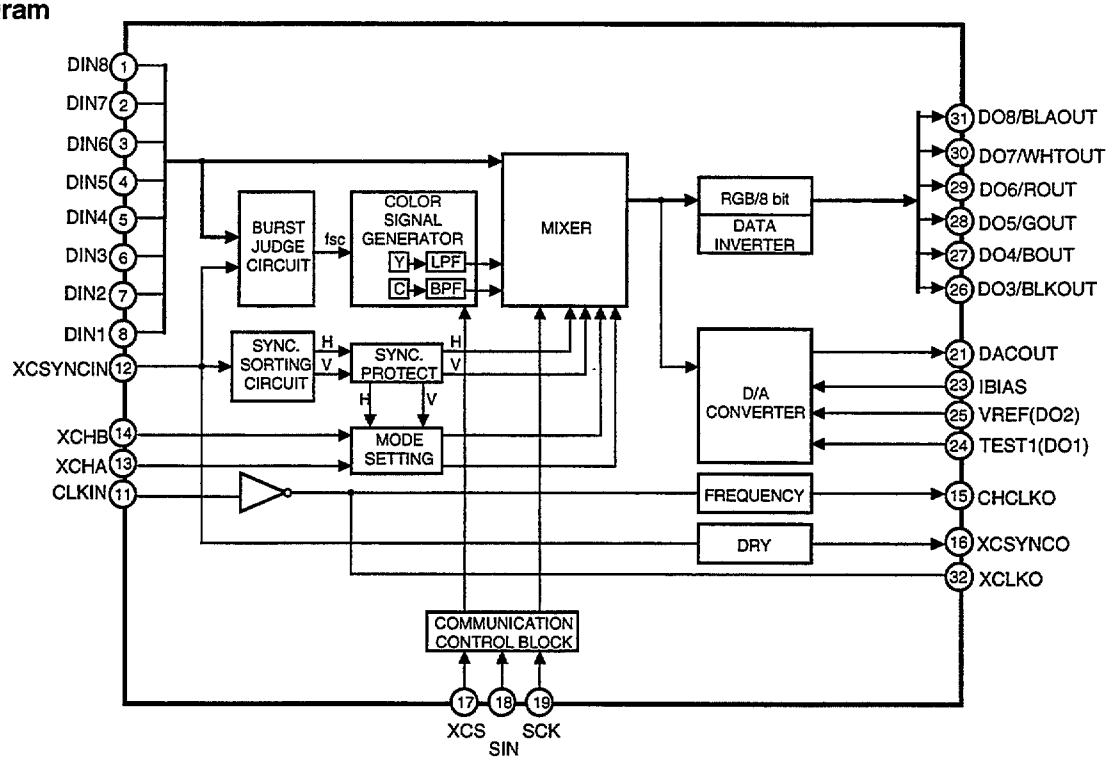

• Pin Function

No.	Pin Name	I/O	Function	No.	Pin Name	I/O	Function
1	DIN8	I	(MSB)	17	XCS	I	Chip select input Serial data conytol input
2	DIN7	I		18	SIN	I	Serial data input
3	DIN6	I		19	SCK	I	Clock input for serial data input
4	DIN5	I		20	AVDD	—	Analog section power supply for DAC (+5V)
5	DIN4	I	Composite video data input	21	DACOUT	O	Composite video signal output (DAC output)
6	DIN3	I		22	AVss	—	Analog section GND for DAC
7	DIN2	I		23	IBIAS	I	Connect a resistor for DAC reference current setting
8	DIN1	I	(LSB)	24	TEST1/DO1	I/O	Connect a capacitor for DAC reference current setting/composite video data output (LSB)
9	DVss	—	GND for digital section	25	TEST2/DO2	I/O	Reference voltage input for DAC/composite video data output
10	DVDD	—	+5V power supply for digital section	26	BLKO/DO3	O	OSD timing (blanking) signal output/composite video data output
11	CLKIN	I	Master clock input LD : 14.31818MHz, VIDEO CD : 13.5MHz	27	BOUT/DO4	O	OSD B signal output/composite video data output
12	XCSYNCIN	I	Composite sync.signal input	28	GOUT/DO5	O	OSD G signal output/composite video data output
13	XCHA	I	OSD character data input	29	ROUT/DO6	O	OSD R signal output/composite video data output
14	XCHB	I	OSD framing data input	30	WHTOUT/DO7	O	OSD white signal output/composite video data output
15	CHCLKO	O	DOT clock output System clock output for OSD (Outputs a clock (CLKIN) divided by 2)	31	BLAOUT/DO8	O	OSD black signal output/composite video data output
16	XCSYNCO	O	Composite sync. signal output for OSD	32	XCLKO	O	Inversion master clock (CLKIN) output

■CXD1852Q (VCDB ASSY : IC101)

- **MPEG1 DECODER**

- **Pin Assignment (Top View)**

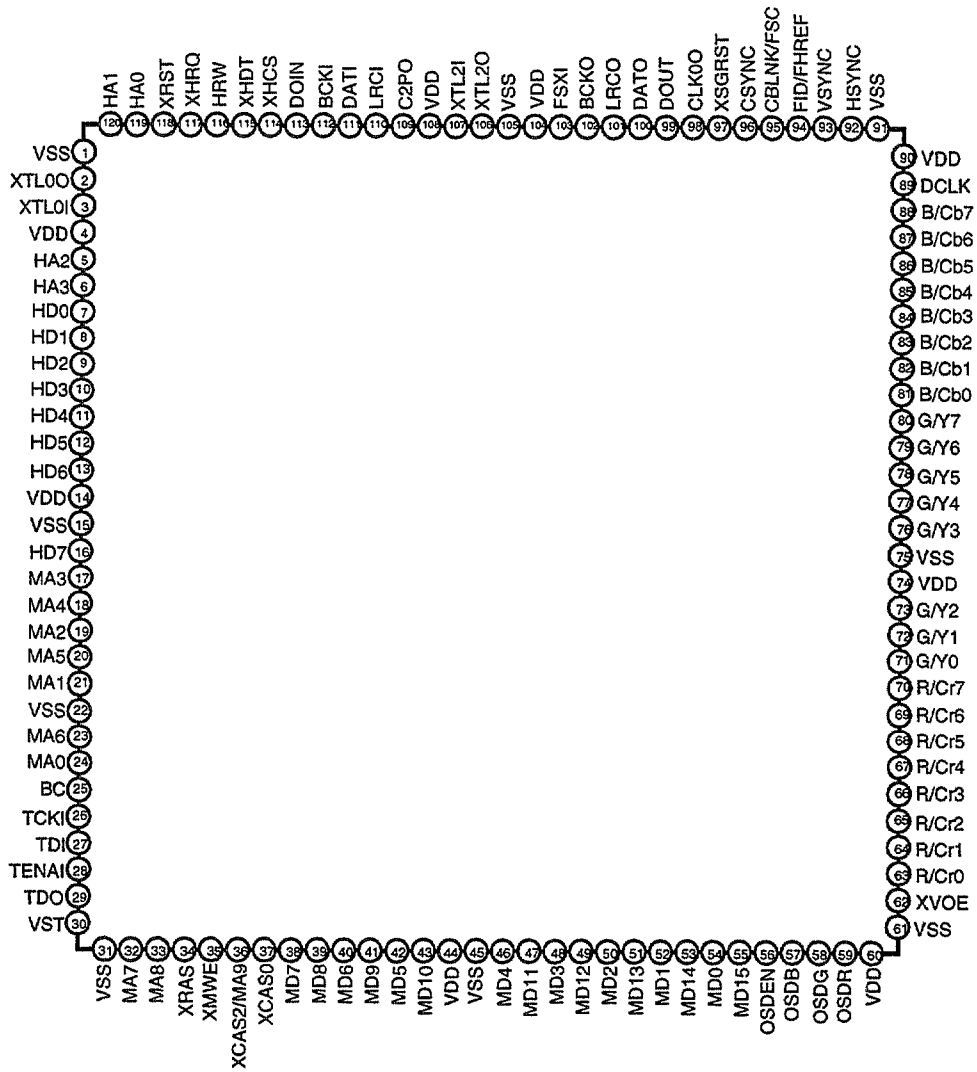

- **Block Diagram**

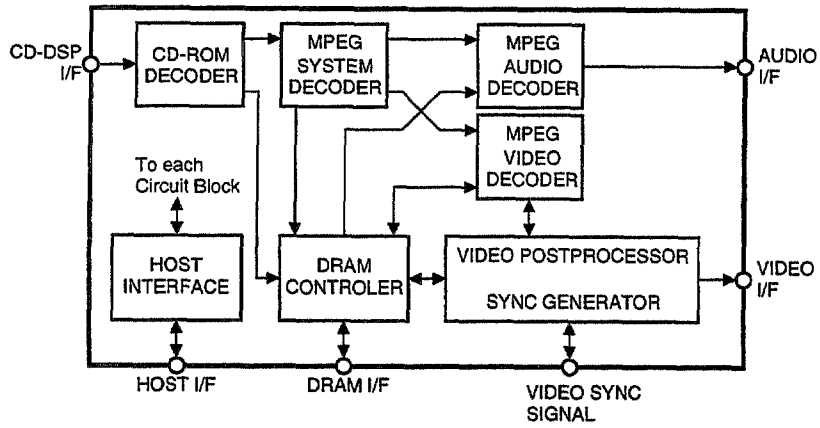

• Pin Function

No.	Pin Name	I/O	Function
1	VSS	—	Connect to ground
2	XTL0O	O	Master clock of video decoder Clock input to XTL0I or connect a oscillator between XTL0I and XTL0O. Frequency is 27MHz, 28.6363MHz (NTSC 8fsc), 35.4686MHz (PAL 8fsc).
3	XTL0I	I	
4	VDD	—	+3.3V power supply
5	HA2	I	When host interface is parallel mode, HA0-HA3, become register address input pins. When host interface is serial mode, HA0 becomes serial data input pin, and HA1-HA3 are fixed to "L" level.
6	HA3		
7	HD0	I/O	When host interface is parallel mode, HD0-HD7, become register data input/output pins. When host interface is serial mode, HD0 becomes serial data output pin, and HD1-HD7 are fixed to "L" level.
8	HD1		
9	HD2		
10	HD3		
11	HD4		
12	HD5		
13	HD6		
14	VDD	—	+3.3V power supply
15	VSS	—	Connect to ground
16	HD7	I/O	When host interface is parallel mode, HD0-HD7, become register data input/output pins. When host interface is serial mode, HD0 becomes serial data output pin, and HD1-HD7 are fixed to "L" level.
17	MA3	O	DRAM address signal output Connect to DRAM address pins agree with number.
18	MA4		
19	MA2		
20	MA5		
21	MA1		
22	VSS	—	Connect to ground
23	MA6	O	DRAM address signal output Connect to DRAM address pins agree with number.
24	MA0		
25	BC	—	Test pin Set to open.
26	TCKI		
27	TDI		
28	TENAI		
29	TDO		
30	VST	—	Test pin Connect to ground.
31	VSS	—	Connect to ground
32	MA7	O	DRAM address signal output Connect to DRAM address pins agree with number.
33	MA8		
34	XRAS	O	Low address strobe signal output Connect to $\overline{RAS}$ signal pin of DRAM.
35	XMWE	O	Write enable signal output of DRAM Connect to $\overline{WE}$ signal pin of DRAM.
36	XCAS2/MA9	O	Use for when connecting the 8 bit DRAM When construction of DRAM is 256kw×16bit×2, connect to $\overline{CAS}$ signal pin of upper word (256k-512k-1) side DRAM (upper and lower bytes are common used). When DRAM is 512kw×8bit×2, connect to MA9 pin (two DRAMs).
37	XCAS0	O	Column address strobe signal output of DRAM. When construction of DRAM is 256kw×16bit×2, connect to $\overline{CAS}$ signal pin of lower word (0-256k-1) side DRAM (upper and lower bytes are common used). In other case, connect to all $\overline{CAS}$ signal pins of DRAM.
38	MD7	I/O	Data signal input/output of DRAM Connect to DRAM data pins agree with number.
39	MD8		
40	MD6		
41	MD9		
42	MD5		
43	MD10		
44	VDD	—	+3.3V power supply
45	VSS	—	Connect to ground

No.	Pin Name	I/O	Function
46	MD4	I/O	Data signal input/output of DRAM Connect to DRAM data pins gree with number.
47	MD11		
48	MD3		
49	MD12		
50	MD2		
51	MD13		
52	MD1		
53	MD14		
54	MD0		
55	MD15		
56	OSDEN	I	OSD enable signal Polarity of enable is changed by register setting.
57	OSDB	I	OSD data input When input signal which input to OSDEN is enable state, entered color in the color table which setting with there inputs (3 bit) is output to the picture data.
58	OSDG		
59	OSDR		
60	VDD	—	+3.3V power supply
61	VSS	—	Connect to ground
62	XVOE	I	Video output enable signal pin L : Picture data output and DCLK output are enabled. H : Disable (High impedance)
63	R/Cr0	O	Picture data output Correspondence of output data format (RGB, YCbCr etc.) and output data are able to changed by register setting.
64	R/Cr1		
65	R/Cr2		
66	R/Cr3		
67	R/Cr4		
68	R/Cr5		
69	R/Cr6		
70	R/Cr7		
71	G/Y0		
72	G/Y1		
73	G/Y2		
74	VDD	—	+3.3V power supply
75	VSS	—	Connect to ground
76	G/Y3	O	Picture data output Correspondence of output data format (RGB, YCbCr etc.) and output data are able to changed by register setting.
77	G/Y4		
78	G/Y5		
79	G/Y6		
80	G/Y7		
81	B/Cb0		
82	B/Cb1		
83	B/Cb2		
84	B/Cb3		
85	B/Cb4		
86	B/Cb5		
87	B/Cb6		
88	B/Cb7		
89	DCLK	I/O	Dot clock (DCLK) signal pin Normally, DCLK frequency is 13.5MHz. DCLK is able to input from this pin and output from this pin by dividing from clock input.
90	VDD	—	+3.3V power supply

No.	Pin Name	I/O	Function
91	VSS	—	Connect to ground
92	HSYNC	I/O	Horizontal sync. signal pin When internal sync. generator is used, outputs dot clock (DCLK) by frequency divided. When internal sync. generator is not used, it becomes input.
93	VSYNC	I/O	Vertical sync. signal pin When internal sync. generator is used, outputs dot clock (DCLK) by frequency divided. When internal sync. generator is not used, it becomes input.
94	FID/FHREF	I/O	Field discrimination signal (FID) and horizontal sync. phase reference signal (FHREF) pin Set this pin by register setting. When set to FID, outputs by using the internal sync. generator and inputs by not using it. "H" is correspond to odd field. When set to FHREF, outputs signal divided by XTL0. When XTL0 is 8fsc, signal becomes suitable HSYNC period and we for phase compare with HSYNC signal.
95	CBLNK/FSC	I/O	Composite blanking signal (CBLNK) and fsc signal pin Set this pin by register setting. When set to CBLK, outputs by using the internal sync. generator and inputs by not using it. When set to fsc, outputs signal divided by XTL0. Divided ratio is able to selected 1/8 or 1/16.
96	CSYNC	O	Composite sync. signal pin divided by DCLK. Signal is not able to input.
97	XSGRST	I	Reset signal input of sync. generator "L" for initialize the internal sync. generator.
98	CLK0O	O	Outputs clock divided by XTL0 Divided ratio is able to selected 1/8 or 1/16.
99	DOUT	O	Audio digital output
100	DATO	O	Audio serial data output to DAC
101	LRCO	O	L/R clock output to DAC
102	BCKO	O	Bit clock output to DAC
103	FSXI	I	Clock input for audio interface Input 256fs (11.2896MHz), 384fs (16.9344MHz), 512fs (22.5792MHz) and 768fs (33.8688MHz).
104	VDD	—	+3.3V power supply
105	VSS	—	Connect to ground
106	XTL2O	O	Master clock of CD-ROM decoder and audio decoder Clock input to XTL2I or connect a oscillator between XTL2I and XTL2O. Frequency is 45MHz. This clock is for internal circuit, then not synchronize the input and output.
107	XTL2I	I	
108	VDD	—	+3.3V power supply
109	C2PO	I	C2 pointer input from CD-DSP Indicate the error of DATI input.
110	LRCI	I	LR clock input from CD-DSP Indicate the L ch and R ch of DATI.
111	DATI	I	Serial data input from CD-DSP
112	BCKI	I	Bit clock input from CD-DSP Clock for strobe the DATI input.
113	DOIN	I	Digital data input from CD-DSP
114	XHCS	I	Chip select signal input at register access
115	XHDT	I/O	Wait signal output at register access When host interface is pararell mode only, this pin is effective. Use to pull-up for open drain operation. In the serial mode, use to pull-up.
116	HRW	I	When host interface is parallel mode, this pin becomes $\overline{R}$/W signal input. When host interface is serial mode, it becomes serial clock input.
117	XHIRQ	O	Interrupt request signal output Use to pull-up for open drain operation.
118	XRST	I	Hardware reset signal input When this pin set to "L", initialize the all operation.
119	HA0	I	When host interface is parallel mode, HA0-HA3, become register address input pins. When host interface is serial mode, HA0 becomes serial data input pin, and HA1-HA3 are fixed to "L" level.
120	HA1		

■ CXD1913Q (VCDB ASSY : IC301)

• DIGITAL VIDEO ENCODER

• Block Diagram

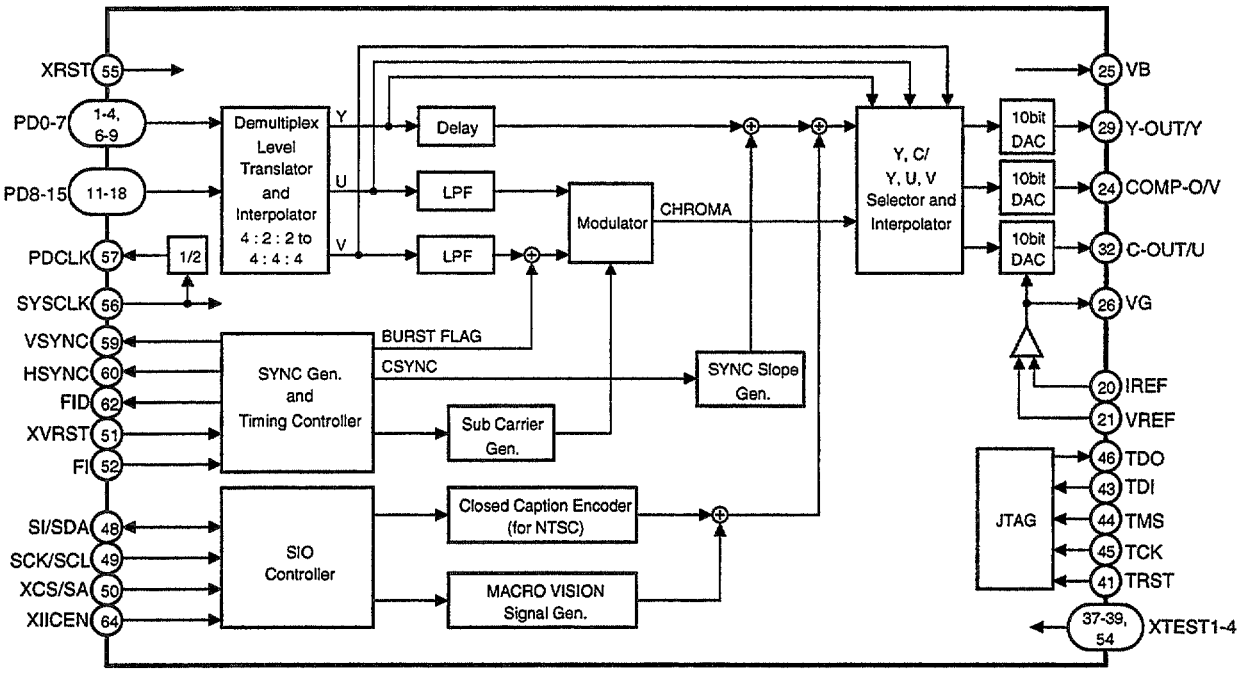

• Pin Function

No.	Pin Name	I/O	Function
1	PD7	I	8bit pixel data input When PIF MODE = 0, input for Y, Cb and Cr signals which are multiplexed. When PIF MODE = 1, input for Y signal.
2	PD6		
3	PD5		
4	PD4		
5	VSS	—	Ground for digital
6	PD3	I	8bit pixel data input When PIF MODE = 0, input for Y, Cb and Cr signals which are multiplexed. When PIF MODE = 1, input for Y signal.
7	PD2		
8	PD1		
9	PD0		
10	VDD	—	Power supply for digital
11	PD15/TD7	I/O	8bit pixel data input/test data bus When PIF MODE = 0, there pins are not able to we. When PIF MODE = 1, input for Cb and Cr signals which are multiplexed. In the test mode, use for the internal circuit test data bus. Test mode is opened for device vender only.
12	PD14/TD6		
13	PD13/TD5		
14	PD12/TD4		
15	PD11/TD3		
16	PD10/TD2		
17	PD9/TD1		
18	PD8/TD0		
19	VSS	—	Ground for digital
20	IREF	I	Reference current input Connect a 16-times resister ("16R") of output resistor value "R" .
21	VREF	I	Reference voltage input Set the output full scale.
22	AVDD1	—	Power supply for analog
23	AVSS1	—	Ground for analog
24	COMP-O/V	O	10bit D/A converter output When YC/YUV = 1, outputs conposite signal. When YC/YUV = 0, outputs color-difference (V) signal.
25	VB	O	Connect a about 0.1μF capacitor to VSS.
26	VG	O	Connect a about 0.1μF capacitor to AVDD.
27	AVDD2	—	Power supply for analog
28	AVSS2	—	Ground for analog
29	Y-OUT/Y	O	10bit D/A converter output Outputs luminance (Y) signal.
30	AVDD3	—	Power supply for analog
31	AVSS3	—	Ground for analog
32	C-OUT/U	O	10bit D/A converter output When YC/YUV = 1, outputs chroma (C) signal. When YC/YUV = 0, outputs color-difference (U) signal.

No.	Pin Name	I/O	Function
33	TD10	I/O	Test data bus Set to open. In the test mode, we for the internal circuit test data bus. Test mode is opened for device vender only.
34	VDD	—	Power supply for digital
35	TD9	I/O	Test data bus Set to open. In the test mode, we for the internal circuit test data bus. Test mode is opened for device vender only.
36	TD8		
37	XTEST1	I	Test mode control input with pull-up When these pins are "H", CXD1910AQ is not test mode. Test mode is opened for device vender only.
38	XTEST2		
39	XTEST3		
40	VSS	—	Ground for digital
41	TRST	I	Reset signal input for JTAG of active "L" with pull-up.
42	VDD	—	Power supply for digital
43	TDI	I	Serial data input for JTAG with pull-up
44	TMS	I	Control signal input for JTAG with pull-up
45	TCK	I	Clock input for JTAG
46	TDO	O	Serial data output for JTAG
47	VSS	—	Ground for digital
48	SI/SDA	I	This pins function is selected by XIICEN (pin 64). When XIICEN is "H", it becomes SONY SIO mode and SI serial data input. When XIICEN is "L", it becomes I²C-BUS mode and SDA input/output.
49	SCK/SCL	I	This pins function is selected by XIICEN (pin 64). When XIICEN is "H", it becomes SONY SIO mode and SCK serial clock input. When XIICEN is "L", it becomes I²C-BUS mode and SCL input.
50	XCS/SA	I	This pins function is selected by XIICEN (pin 64). When XIICEN is "H", it becomes SONY SIO mode and XCS chip select input. When XIICEN is "L", it becomes I²C-BUS mode and SA slave address selection input signal which selecting slave address of I²C-BUS.
51	XVRST	I	Vertical sync. reset input of active "L" with pull-up Use for synchronize the external and internal vertical sync. When XVRST is "L", reset the internal digital sync. generator according to FI.
52	FI	I	Field ID input Indicates the field ID at vertical sync. reset. H : 1st field L : 2nd field
53	VDD	—	Power supply for digital
54	XTEST4	I	Test mode control input with pull-up When these pins are H, CXD1910AQ is not test mode. Test mode is opened for device vender only.
55	XRST	I	System reset input at active "L" "L" for more than 40 clocks (SYSCLK) at power on reset.
56	SYSCLK	I	System clock input It needs to correctly 27MHz for generating the correctly sub-carrier frequency.
57	PDCLK	O	Pixel data clock output for 13.5MHz This clock is SYSCLK divided by 2. Use for 16bit pixel data mode.
58	VSS	—	Ground for digital
59	VSYNC	O	Vertical sync. signal output
60	HSYNC	O	Horizontal sync. signal output
61	SO	O	This pin's function is selectedby XIICEN (pin 64). When XIICEN is "H", it becomes SONY SIO mode and SO serial out output. When XIICEN is "L", this pin is not used and output becomes Hi-impedance.
62	FID	O	Field ID output When FIDS = 1, L : 1st field, H : 2nd field. When FIDS = 0, H : 1st field, L : 2nd field.
63	VDD	—	Power supply for digital
64	XIICEN	I	Serial interface mode selection input with pull-up When this pin is "L", pins 48 to 50 and 61 become I²-C-BUS mode. When this pin is "H", pins 48 to 50 and 61 become SONY SIO mode.

■PD6193A (VCDB ASSY : IC501)

• VCD CONTROL IC

• Block Diagram

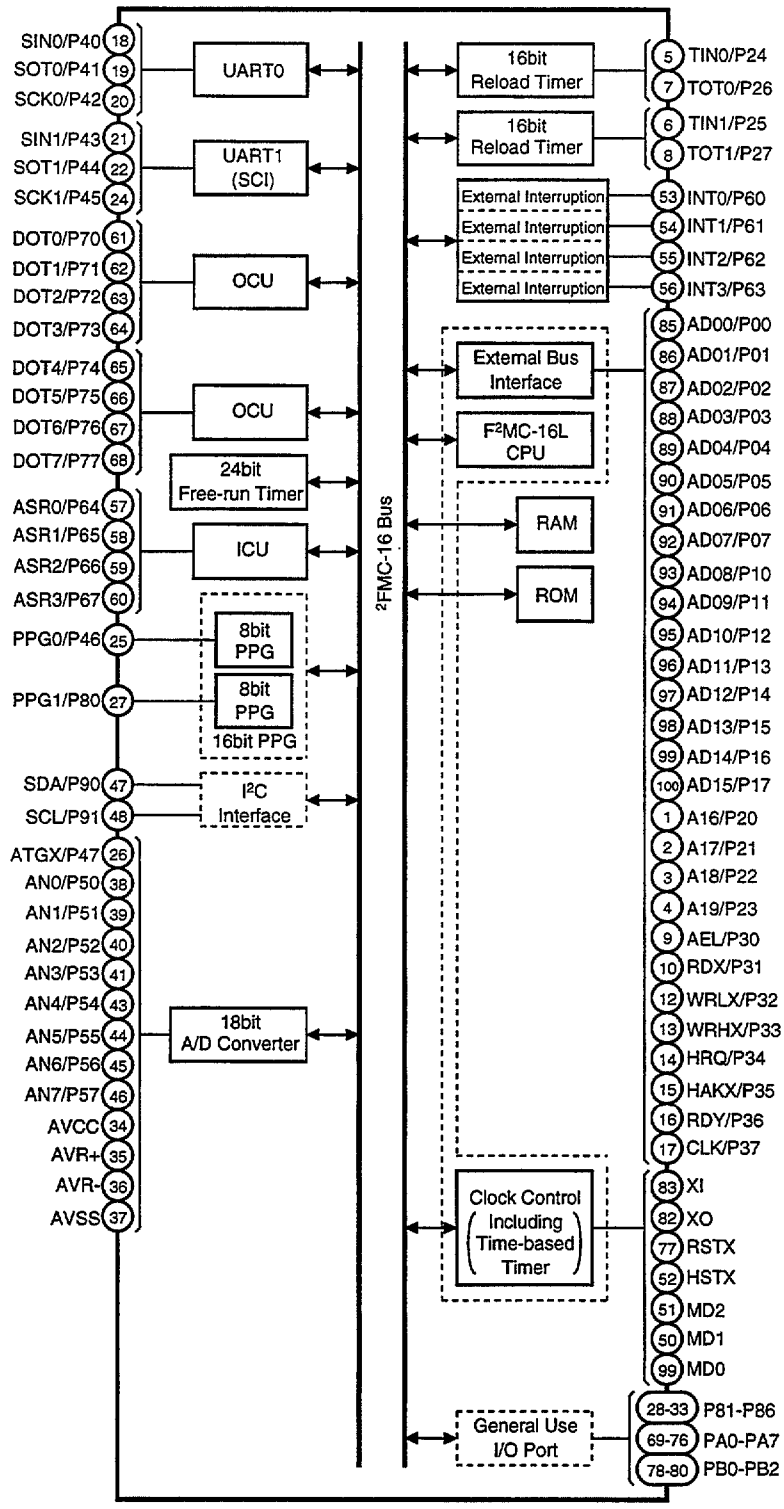

• Pin Function

No.	Pin Name	I/O	Function
1	P20	I	Not used (+5V)
2	P21		
3	P22		
4	P23		
5	P24		
6	P25		
7	P26		
8	P27		
9	P30		
10	P31		
11	VSS	—	GND
12	P32	I	Not used (+5V)
13	P33		
14	P34		
15	P35		
16	P36		
17	P37		
18	SIN0	I	Serial data input
19	SOT0	O	Serial data output
20	P42	I	Not used (+5V)
21	SINC	I	Serial communication (data input)
22	SOUTB	O	Serial communication (data output)
23	VCC	I	Power supply (+5V)
24	SCKB	O	Serial communication (clock)
25	CSM	O	Communication device selection (CXD1852)
26	CSV	O	Communication device selection (CXD1913)
27	BUSW	O	Communication device selection (system controller)
28	RSTM	O	Reset (CXD1852)
29	RSTV	O	Reset (CXD1913)
30	LD/VCD	O	Select the player output screen H : Player screen L : VCD screen
31	NTSC/PAL	O	Reserve pin (+5V)
32	P85		
33	P86		
34	AVCC	I	Power supply (+5V)
35	AVR+	I	Reference voltage of analog circuit (+5V)
36	AVR-	I	Reference voltage of analog circuit (GND)
37	AVSS	—	GND
38	P50	I	Not used (+5V)
39	P51		
40	P52		
41	P53		
42	VSS	—	GND
43	P54	I	Not used (+5V)
44	P55		
45	P56		
46	P57		
47	P90	I/O	Not used (+5V)
48	P91		
49	MD0	I	Operation mode setting (connect to +5V)
50	MD1		
51	MD2	I	Operation mode setting (connect to GND)
52	HSTX	I	N.C.
53	TVSYNC	I	Video vertical sync. signal interruption
54	IRQM	I	CXD1852 interruption
55	REQACK	I/O	Serial communication (REQ/ENB)
56	INT3	I	Not used (+5V)
57	OSD MODE	I	H : Color L : Monochrome (connect to +5V)
58	P65	I	Not used (+5V)
59	P66		
60	COLOR BAR	I	L : Color-bar display
61	P70	I	Reserve pin (+5V)
62	P71		
63	P72		
64	P73		
65	P74		
66	P75		
67	P76		
68	P77		
69	PA0	I	Not used (+5V)
70	PA1		
71	PA2		
72	PA3		
73	PA4		
74	PA5		
75	PA6		
76	PA7		
77	XRST	I	External reset request input
78	PB0	I	Not used (+5V)
79	PB1		
80	PB2		
81	VSS	—	GND
82	X0	I	Pins for crystal oscillator (4MHz)
83	X1	O	
84	VCC	I	Power supply (+5V)
85	P00	I	Not used (+5V)
86	P01		
87	P02		
88	P03		
89	P04		
90	P05		
91	P06		
92	P07		
93	P10		
94	P11		
95	P12		
96	P13		
97	P14		
98	P15		
99	P16		
100	P17		

7.1.2 DISPLAY

■ VAW1039 (FLKB ASSY : V101)

•FL TUBE

• ANODE GRID ASSIGNMENT & PIN ASSIGNMENT

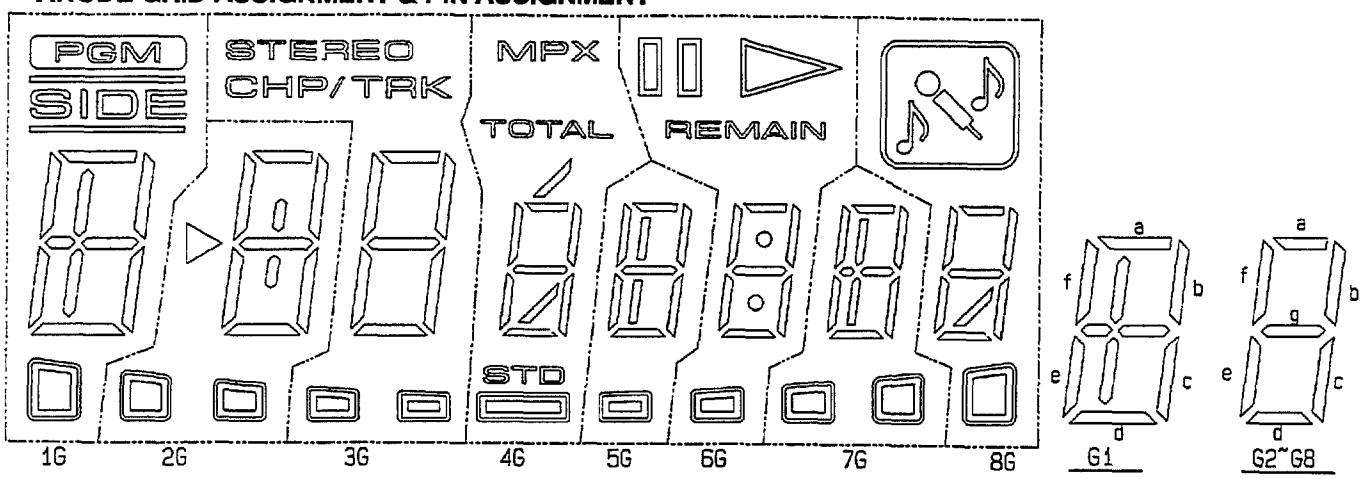

• ANODE GRID ASSIGNMENT

	G1	G2	G3	G4	G5	G6	G7	G8
S1	a	a	a	a	a	a	a	a
S2	b	b	b	b	b	b	b	b
S3	c	c	c	c	c	c	c	c
S4	d	d	d	d	d	d	d	d
S5	e	e	e	e	e	e	e	e
S6	f	f	f	f	f	f	f	f
S7	g	g	g	g	g	g	g	g
S8			STEREO	(UP)				
S9			CHP/TRK	(DW.)				
S10	PGM	(R)	(R)	MPX			(R)	
S11	SIDE	(L)	(L)	TOTAL		REMAIN	(L)	
S12		(R)	(R)	STD			(R)	
S13		(L)	(L)				(L)	

• PIN ASSIGNMENT

Pin No.	1	2	3	4	5	6	7	8	9	10
Assignment	F	F	NP	S13	S12	S11	S10	S9	S8	S7
Pin No.	11	12	13	14	15	16	17	18	19	20
Assignment	S6	S5	S4	S3	S2	S1	G1	G2	G3	G4
Pin No.	21	22	23	24	25	26	27			
Assignment	G5	G6	G7	G8	NP	F	F			

F:Filament G1~G8:Grid S1~S13:Anode NP:No pin

7.2 DIAGNOSIS

7.2.1 SELF-DIAGNOSTIC FUNCTIONS

(1) SELF-DIAGNOSTIC FUNCTIONS

The self-diagnostic functions automatically display an error code on the TV screen and front panel fluorescent display section when there is an error. The customer checks the error code and conveys it to the service personnel to make repairs more efficient.

After an error occurs, even if the error code goes off, you can display the error code again by holding down the CLEAR key for 5 seconds (except a loading error L *) display). At that time, partial error is displayed with the mechanism switch information. However, if the power cord is unplugged, the error code information is lost.

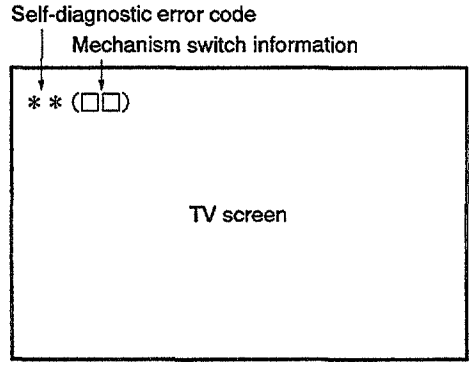

Fig. 1 TV screen display

This table explains the information for analyzing the cause when an error occurs with the CLD player.

Self-diagnostic error code	Contents	Conditions	Probable cause
H0	Spindle overcurrent detection error.	In the play state, overcurrent was detected in the spindle motor. Monitoring starts 5 seconds after the start of play or special playback mode, this error is detected if the overcurrent port is "L" for 4 seconds.	•Motor NG •Clamper rubbing
U0	FG abnormality error	①At LD start-up, the rate of rotation calculated from the FG was less than 15 rpm for 5 consecutive seconds from the spindle run command. ②At CD start-up, there was less than 1/8th rotation even after 5 seconds had passed since the end of acceleration. ③During play search, CD : subcordes are being read/LD : Phillips codes are being read and the spindle is locked, but a state in which the rate of rotation calculated from the FG was less than 15 rpm continued for 5 seconds or more. In the above case, it is judged that an abnormality has occurred in the FG sensor and that accurate rotation rate calculation has become impossible.	•FG sensor abnormality, FG signal not coming to mechanism controller •FG sensor clogged •Rubbing between FG sensor and slit •Turntable dropped •FG slit deposition NG
H1	Partial short error	①At LD start-up, the speed did not reach 1200 rpm within a certain time (12 seconds) after the spindle run command. ②At CD start-up, a certain speed (313 rpm) was not reached within 6 seconds from the end of spindle acceleration.	•Spindle motor NG •Commutator NG •Bearing too tight •Power supply NG
H2 A0	Power supply abnormality error	– 5V power supply abnormality detected. The power supply abnormality port is constantly monitored and if its signal stays high for about 1 second consecutively, the power supply is judged to be abnormal.	• – 5V not fed from POWER SUPPLY assy •Parts shorted
L *	Loading error	①When loading operation goes over time (approx. 10 sec.). ②When assist at disc sense entry ends and is not tilt neutral. ③When assist at set up entry ends and is not tilt neutral.	•Tilt switch 1, 2, 3 abnormal, so tilt/loading state not read in correctly •Tilt/loading mechanism mechanically locked •Drive IC NG •Power supply NG
E *	Slider error	During slider movement, a time over-run occurred (track count search 20 seconds, mandatory movement 10 seconds)	•Slider ceased being able to run •The slider mechanism is mechanically locked and can no longer move to its target. •Slider position switch NG •Flexible cable pulled out •Drive IC NG •Power supply abnormal
U1	Miss clamp error	①During LD setup, after 1/8th rotation, the track count during 1/8 rotation exeeded 511. ②During start-up, the focus was lost once and refocusting was attempted, but the focus could not be locked. ③Two FG pulses did not come within 800 ms from from the start of LD start-up. ④The disc clamp operation did not end within 5 seconds.	•Disc sandwiched •Disc shifted •Spindle motor NG •Disc scratched or dirty defocused during start-up •Two discs loaded •PU actuator NG •Tilt sensor NG •Tilt neutral NG (tilt base NG)

Self-diagnostic error code	Contents	Conditions	Probable cause
P ∗	Spindle error	①During TOC reading with an LD, the spindle servo was not locked within 60 seconds from the start of the spindle run. ②When CAV/CLV determination is not finished within 60 seconds from spindle servo lock. ③The codes could not be read for 10 – 15 seconds consecutively for an LD or 7 – 10 seconds for a CD/CDV and the spindle servo was not locked. ④The speed exceeded 2100 rpm during LD start up.	P0 :•PH code, SUB-Q code can not be read •VCO, PLL offset out of adjustment •Disc defect P5:•PAL disc, mirror disc, etc. PLAY •No RF P6:•Spindle servo does not lock •Spindle motor NG
F ∗	Focus error	①"In the "no disc" state, a setup command was received from the mode controller. ②When LD is out of focus when slider is moved to starting position during set up. In case of CD/CDV is NG even after three focus tries. ③During start-up, the maximum slider servo duty continued for 3 loops or more.	F5 :•CD, LD on top of each other •LD scratched or dirty defocused during slider movement •Disc NG •Slider position switch NG F6 :•Inner edge of disc scratched or dirty •Slider ran into inner edge mechanical stopper
J1	VCD μCOM communi-cation error	Communication error between the microcomputer (IC501) on the VCDB Assy and the mode control IC.	•Wire break of communication line (connector CN101 NG) •Power supply NG •VCD microcomputer (IC501) NG •Communication line buffer IC (IC601) NG
J2	VCD μCOM communi-cation error	Communication error between the microcomputer (IC501) on the VCDB Assy and the VCD decoder (IC101).	•VCD microcomputer (IC501) NG •Communication line buffer IC (IC601) NG •Buffer IC (IC602, IC603) NG •MPEG decoder IC (IC101) NG
J3	VCD μCOM communi-cation error	Communication error between the microcomputer (IC501) on the VCDB Assy and the video encoder (IC301).	•VIDEO encoder IC (IC301) NG •Wire break of communication line between IC501 and IC301

∗ Besides the above errors, there is the "U2" communications error (the mode controller could not communicate normally with the mechanism controller) The probable cause is a defective mechanism controller, disconnected cable, etc..

∗ Mechanism mode contents (meanig of ∗ for L ∗ etc.)

0 : Play
1 : Open
2 : Standby
3 : Clamp
4 : Disc sense
5 : Setup (rotation start)
6 : TOC read
7 : Play
8 : Search
9 : Side A → Side B
A : Side B → Side A

(2) FORMAT OF THE MECHANISM SWITCH INFORMATION WHICH IS TRANSMITTED TO THE MODE CONTROL IN THE ERROR OCCURRENCE

Hexadecimal number system	Binary number system
0	0 0 0 0
1	0 0 0 1
2	0 0 1 0
3	0 0 1 1
4	0 1 0 0
5	0 1 0 1
6	0 1 1 0
7	0 1 1 1
8	1 0 0 0
9	1 0 0 1
A	1 0 1 0
B	1 0 1 1
C	1 1 0 0
D	1 1 0 1
E	1 1 1 0
F	1 1 1 1

• Mechanism switch information (1 7)

Example

Hexadecimal number system

Mechanism control → Mode control
Communication byte address 5 (COMBUF5)
(Mode control displays this value as it is.)

Example

Example 1 — Hexadecimal number system

Example 7

Binary number system

0	0	0	1	0	1	1	1
bit 7	bit 6	bit 5	bit 4	bit 3	bit 2	bit 1	bit 0
TURN A	O Not used	LTSW1	LTSW2	LTSW3	SLDP1	SLDP2	SLDP3

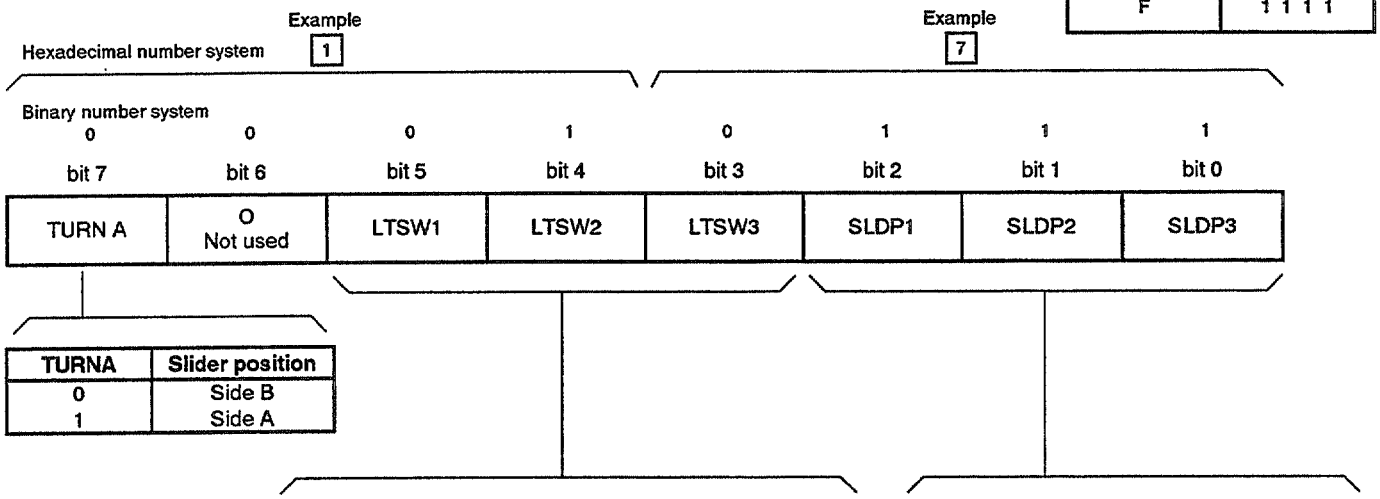

TURNA	Slider position
0	Side B
1	Side A

Example of 1 7 is indicated as follows.

Slider : Side B
Tilt : Tilt +
Position : B-INSIDE

LTSW 1	LTSW 2	LTSW 3	Loading/tilt position
0	1	1	Open (Tray open state)
0	0	1	Loading (During move the tray horizontally)
1	0	1	Standby (Tray close & spindle down state)
1	0	0	Clamp (Durring spindle up or down)
0	0	0	Tilt – (Clamp state)
0	1	0	Tilt + (Clamp state)
1	1	0	Tilt limit (Clamp state)

SLDP 1	SLDP 2	SLDP 3	Slider position
1	0	0	CD active position
1	0	1	CDV active position
1	1	0	LD active position
0	1	1	CD inside position
1	1	1	Side B inside position

7.2.2 DISASSEMBLY/ASSEMBLY（分解/組立の手順）

(1) DISC TRAY

- Disassembly : ①→②→③→④→⑤
- Assembly : ⑤→①

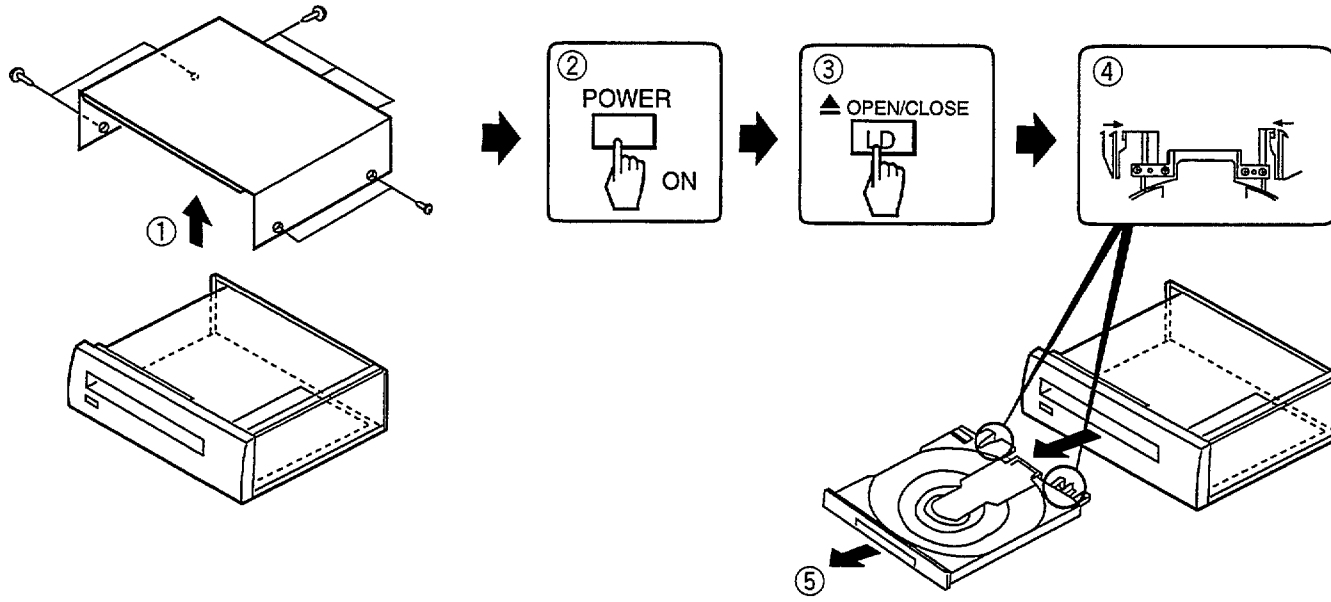

(2) MOTHER ASSY

- Disassembly : ①→②→③→④→⑤→⑥
- Assembly : ⑥→⑤→④→③→②→①

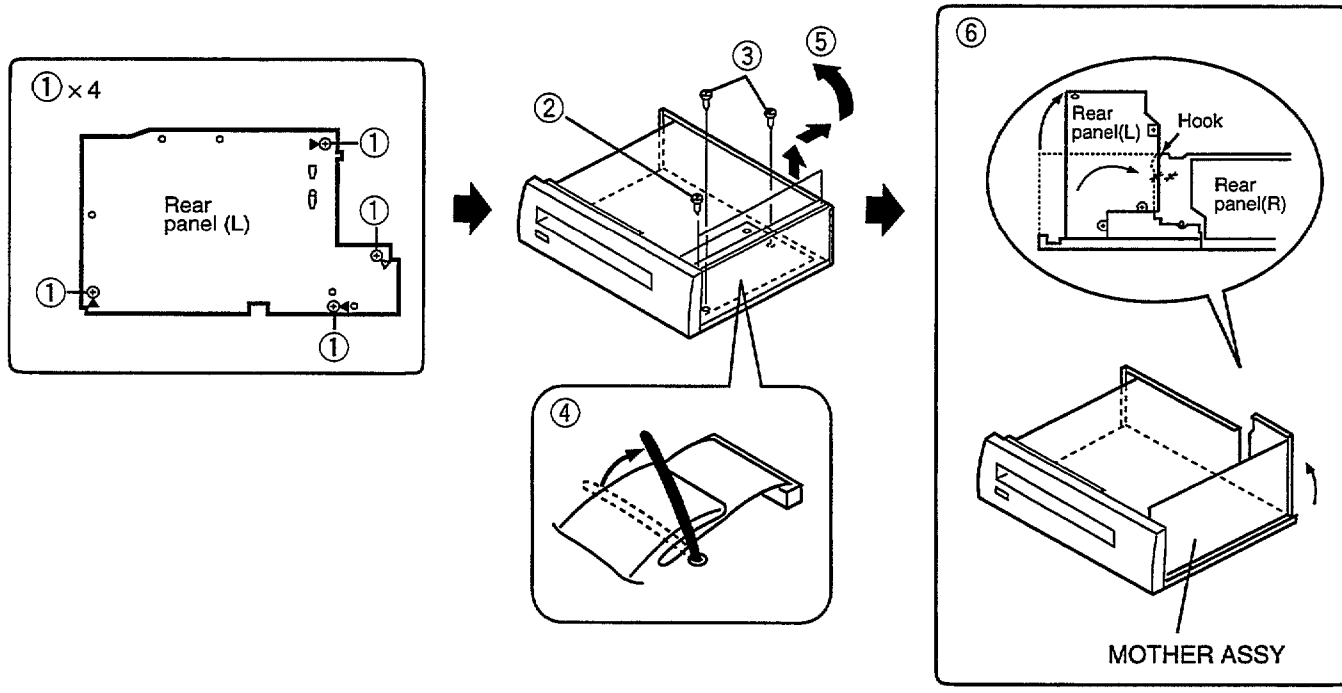

(3) HOW TO INSTALL THE FLEXIBLE CABLE FOR CARRIAGE ASSY
（キャリッジASSY用フレキシブルケーブルの取付方法）

① New Flexible cable

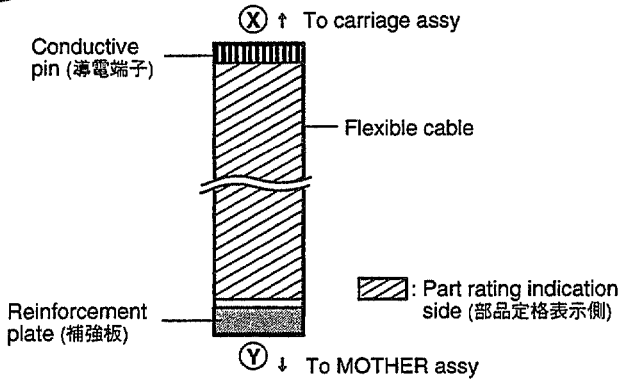

② Bend the Flexible cable
(フレキシブルケーブルを折り曲げる)

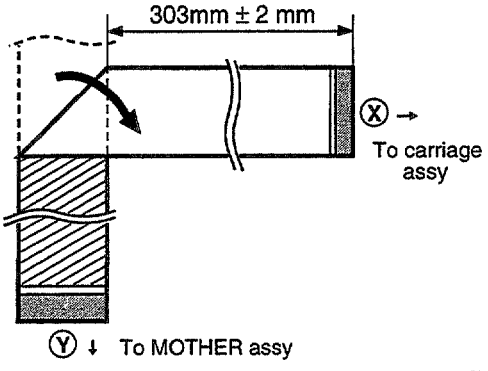

③, ④

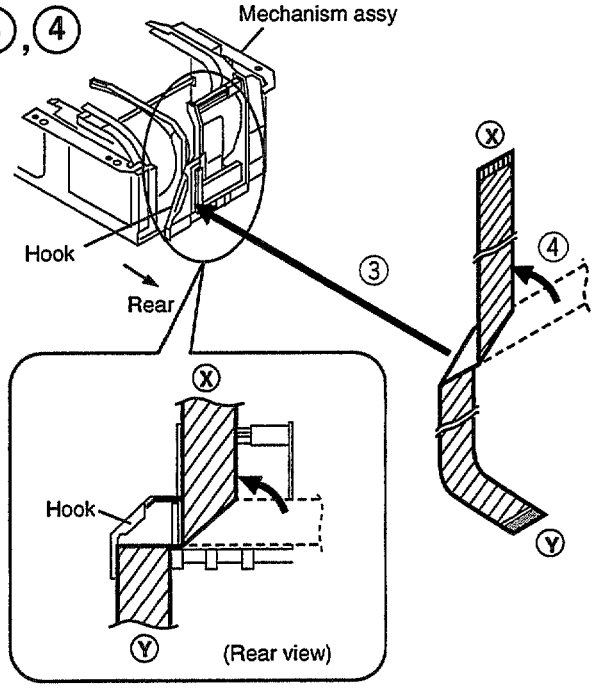

⑤

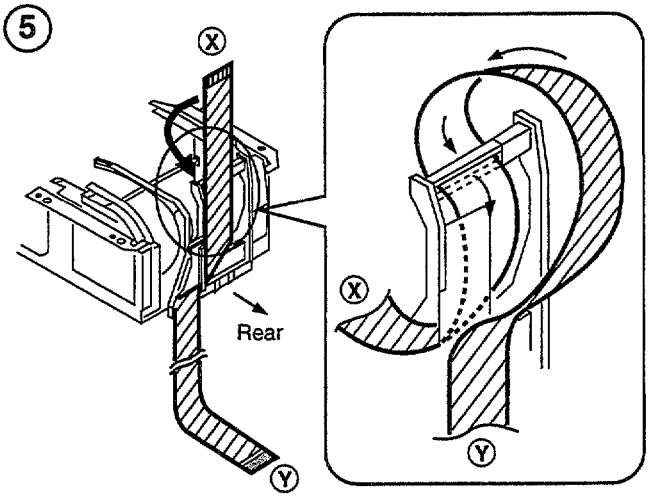

⑥, ⑦

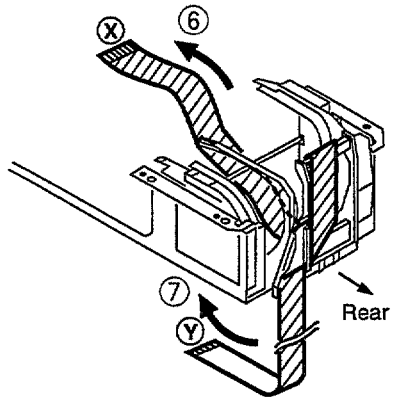

⑧ Turn the mechanism assy upside down
(メカASSYを裏返す)

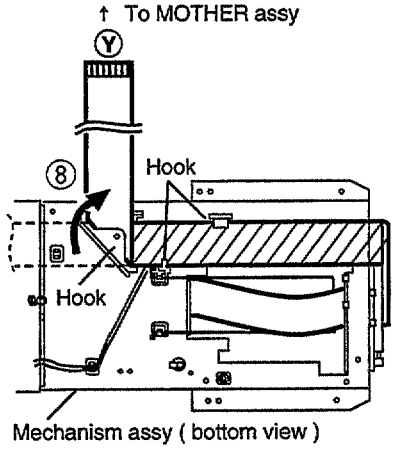

9

Caution:
Don't connect the ⓧ side of flexible cable to the carriage assy in this step. (この段階では フレキシブルケーブルのⓧ側をキャッリジASSYへ接続しない)
If connect it, the laser diode might be damaged by the static electricity. (もし接続すると、静電気によりレーザーダイオードが破壊される場合があります)

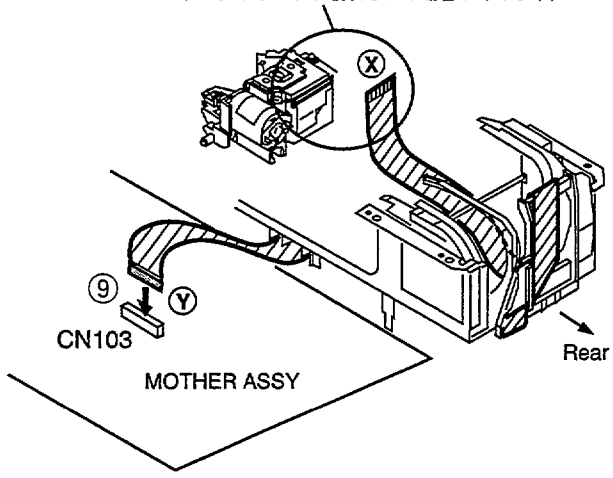

11, **12**

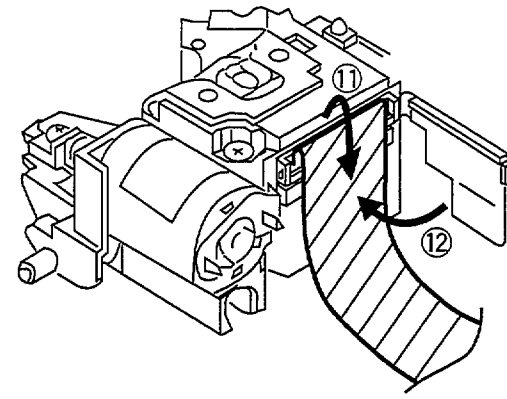

10

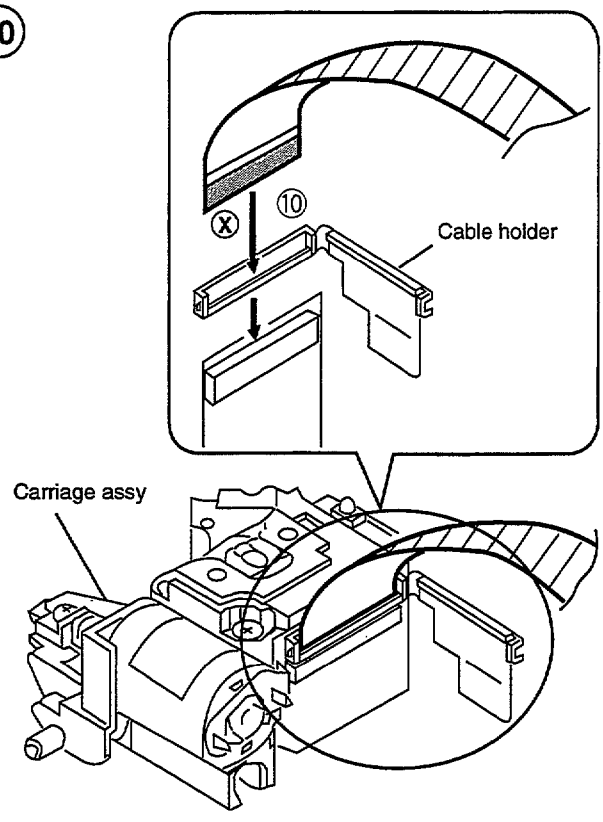

13 Finish (終了)

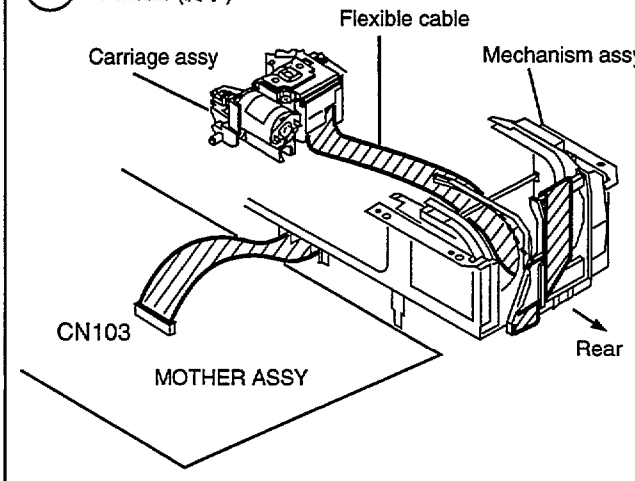

7.2.3 AGEING MODE (エージングモード)

AGEING MODE: ON •Note for KARAOKE model : Set the SINGLE PLAY (一曲停止) mode to OFF.

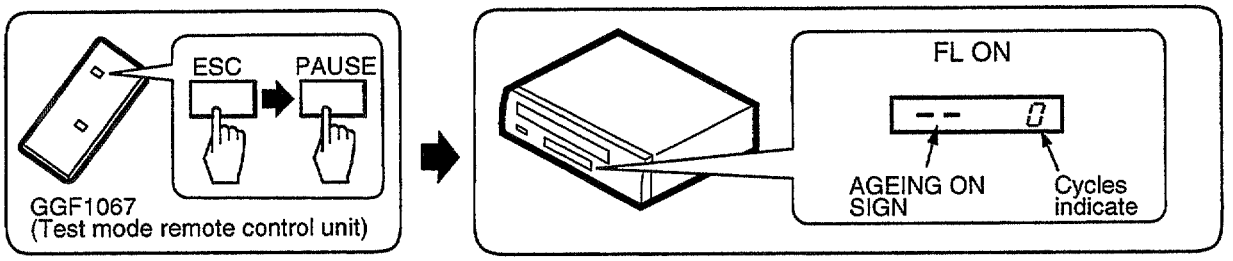

AGEING

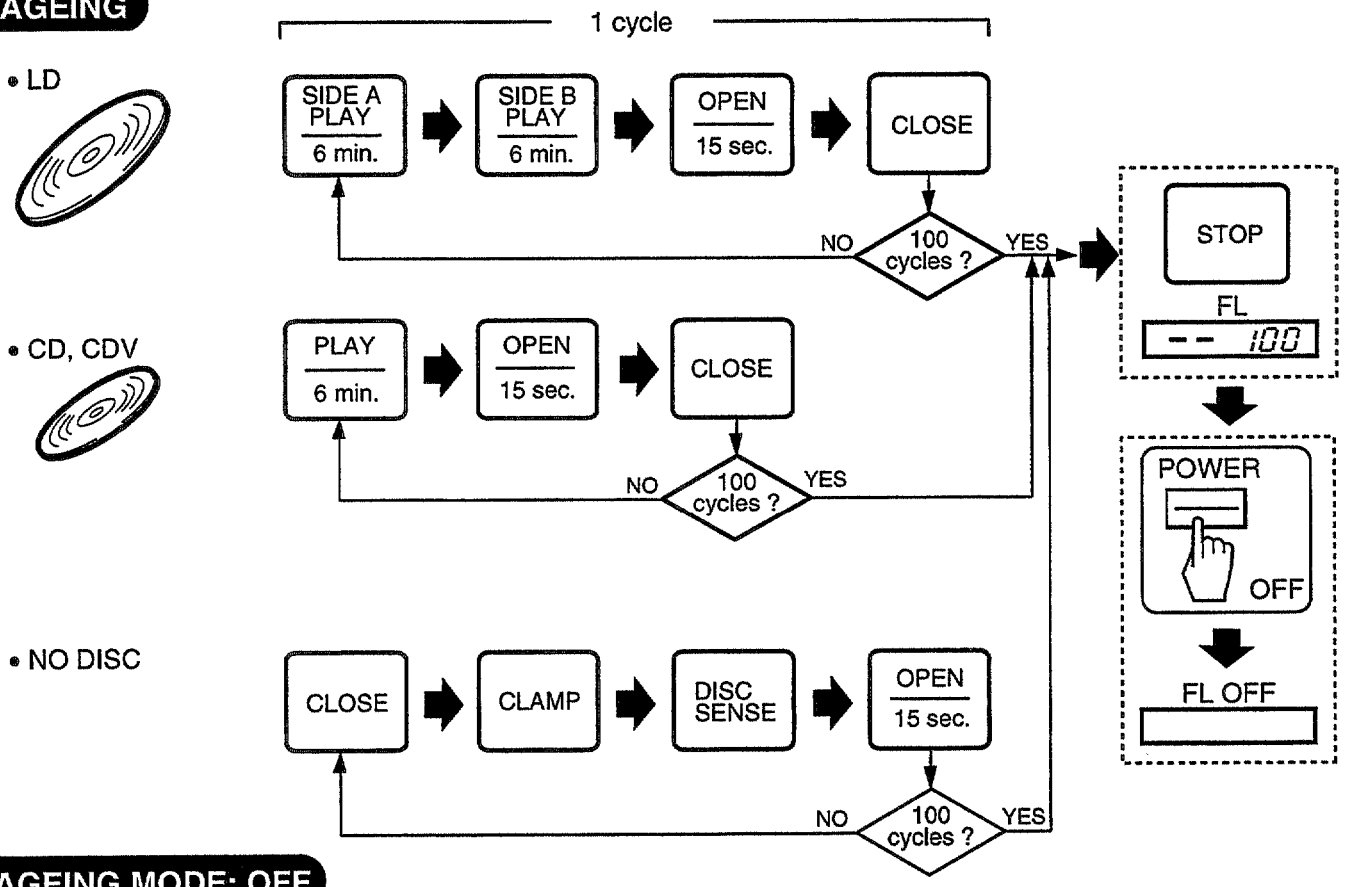

AGEING MODE: OFF

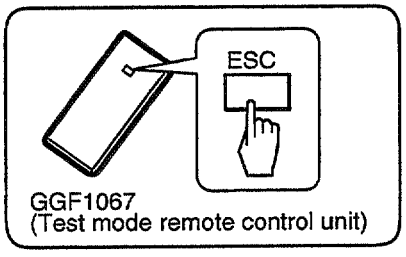

ERROR OCCURRED ERROR OCCURED : エラー発生

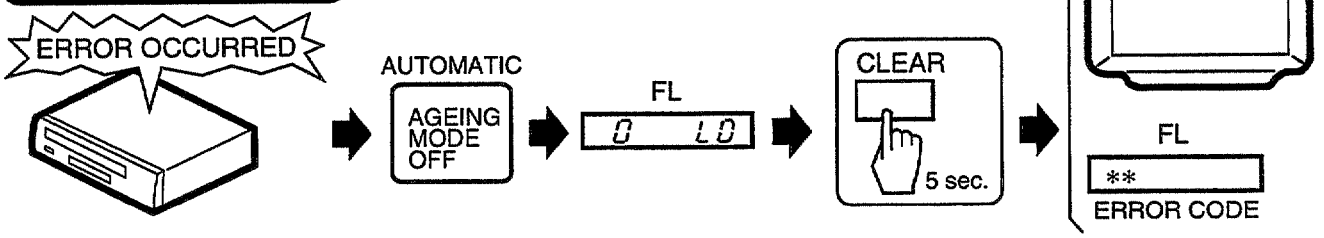

7.2.4 VCD Color-bar Output

The VCDB ASSY have the test mode which output the color-bar signal independently.

VCD Color-bar Test Mode

Color-bar TEST MODE: ON

(1) Power OFF

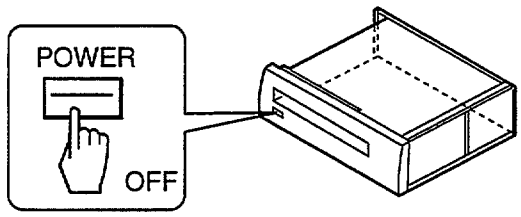

(2) Mount R558 (0Ω)

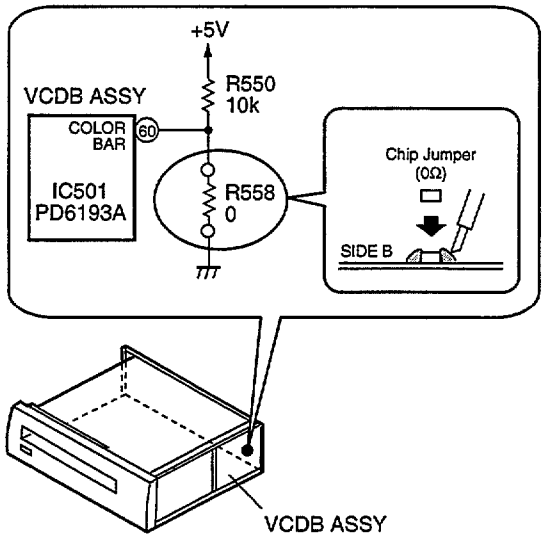

(3) Power ON

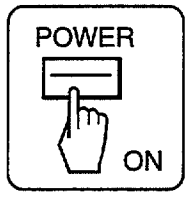

(4) Tray Open

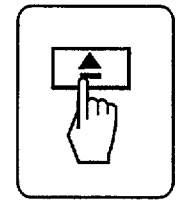

(5) VCD Disc Set

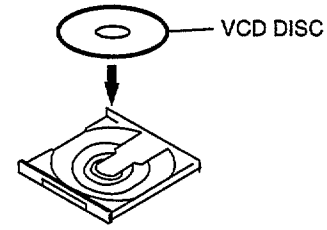

(6) Tray Close

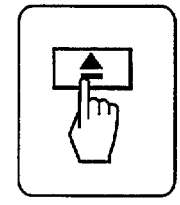

(7) 100% Color-bar Output

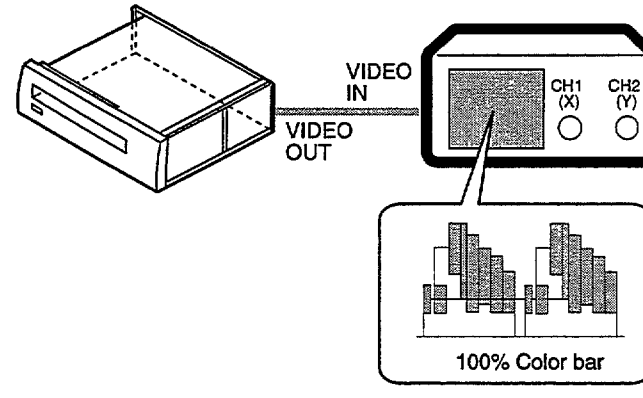

7.3 BLOCK DIAGRAM

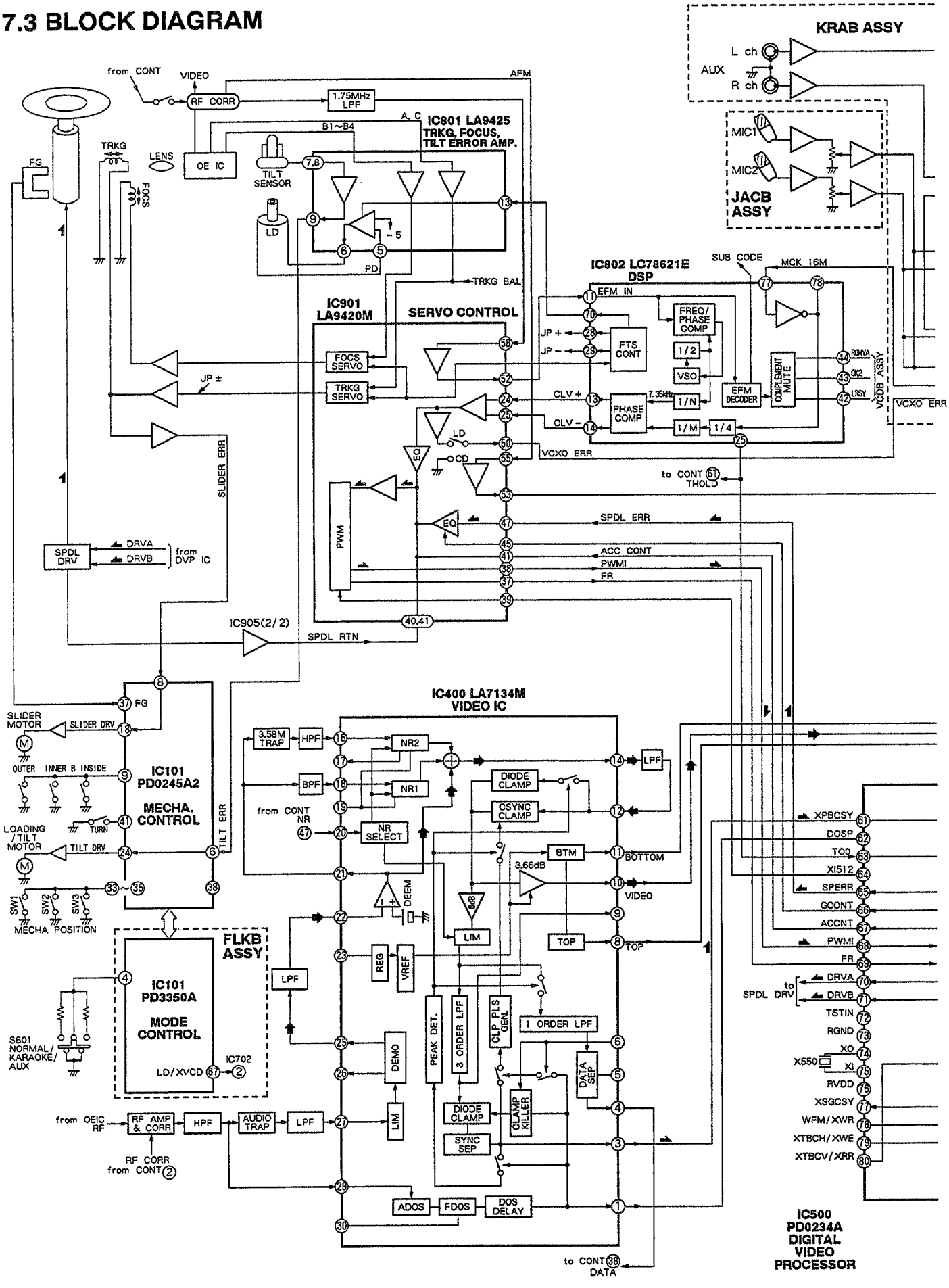

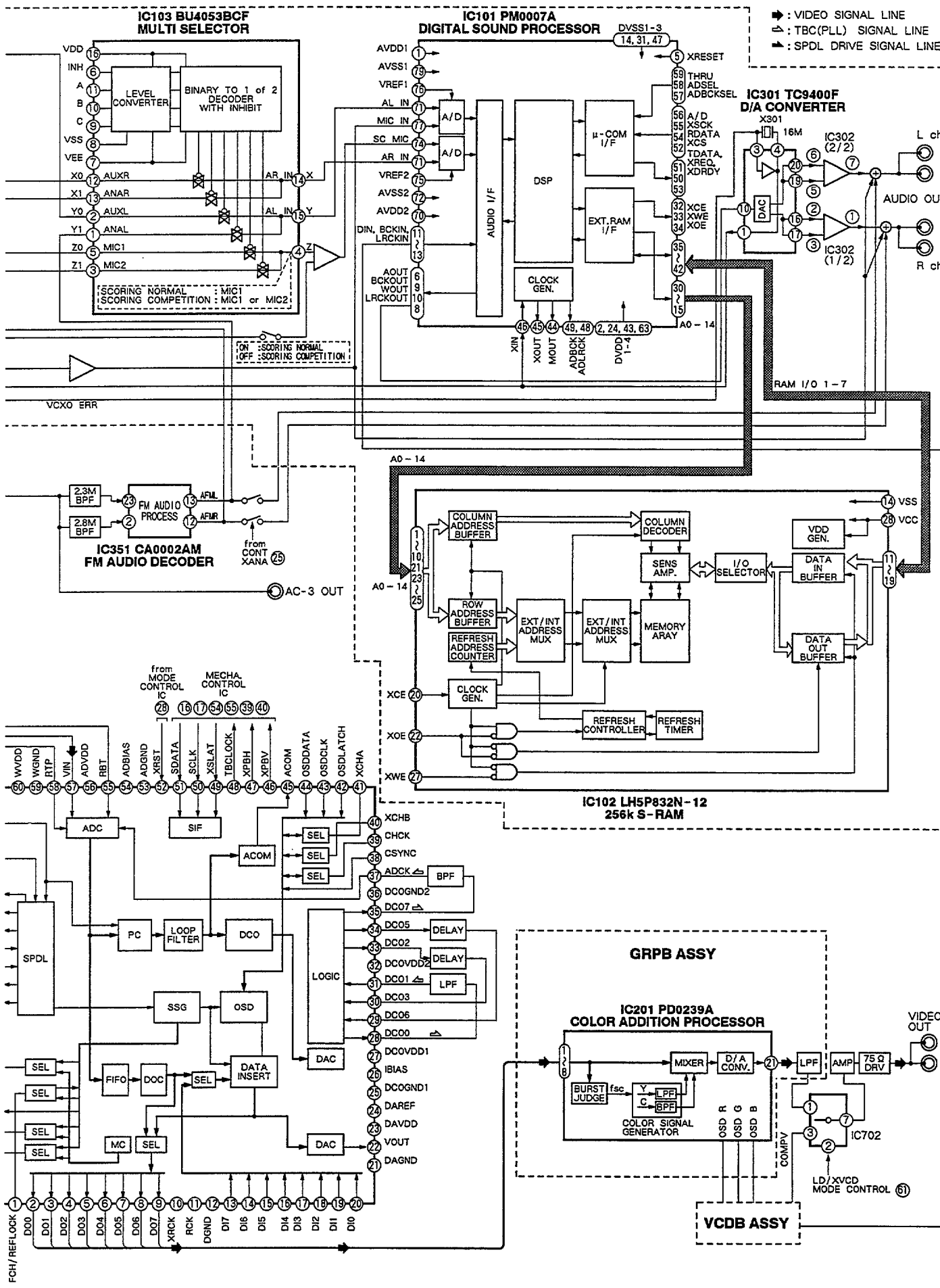
: VIDEO SIGNAL LINE
: TBC(PLL) SIGNAL LINE
: SPDL DRIVE SIGNAL LINE
IC103 BU4053BCF
MULTI SELECTOR
LEVEL CONVERTER
BINARY TO 1 of 2 DECODER WITH INHIBIT
SCORING NORMAL : MIC1
SCORING COMPETITION : MIC1 or MIC2
ON :SCORING NORMAL
OFF :SCORING COMPETITION
IC101 PM0007A
DIGITAL SOUND PROCESSOR
A/D
AUDIO I/F
DSP
μ-COM I/F
EXT.RAM I/F
CLOCK GEN.
IC301 TC9400F
D/A CONVERTER
X301
16M
IC302 (2/2)
IC302 (1/2)
DAC
L ch
R ch
AUDIO OUT
VCXO ERR
RAM I/O 1-7
IC351 CA0002AM
FM AUDIO DECODER
2.3M BPF
2.8M BPF
FM AUDIO PROCESS
from CONT XANA
AC-3 OUT
IC102 LH5P832N-12
256k S-RAM
COLUMN ADDRESS BUFFER
COLUMN DECODER
SENS AMP.
I/O SELECTOR
VDD GEN.
DATA IN BUFFER
DATA OUT BUFFER
ROW ADDRESS BUFFER
REFRESH ADDRESS COUNTER
EXT/INT ADDRESS MUX
MEMORY ARAY
REFRESH CONTROLLER
REFRESH TIMER
from MODE CONTROL IC
MECHA. CONTROL IC
ADC
SIF
ACOM
SPDL
PC
LOOP FILTER
DCO
LOGIC
DELAY
LPF
BPF
SSG
OSD
FIFO
DOC
DATA INSERT
MC
SEL
GRPB ASSY
IC201 PD0239A
COLOR ADDITION PROCESSOR
MIXER
D/A CONV.
BURST JUDGE
COLOR SIGNAL GENERATOR
AMP
75Ω DRV
VIDEO OUT
IC702
LD/XVCD MODE CONTROL
VCDB ASSY
FCH/REFLOCK

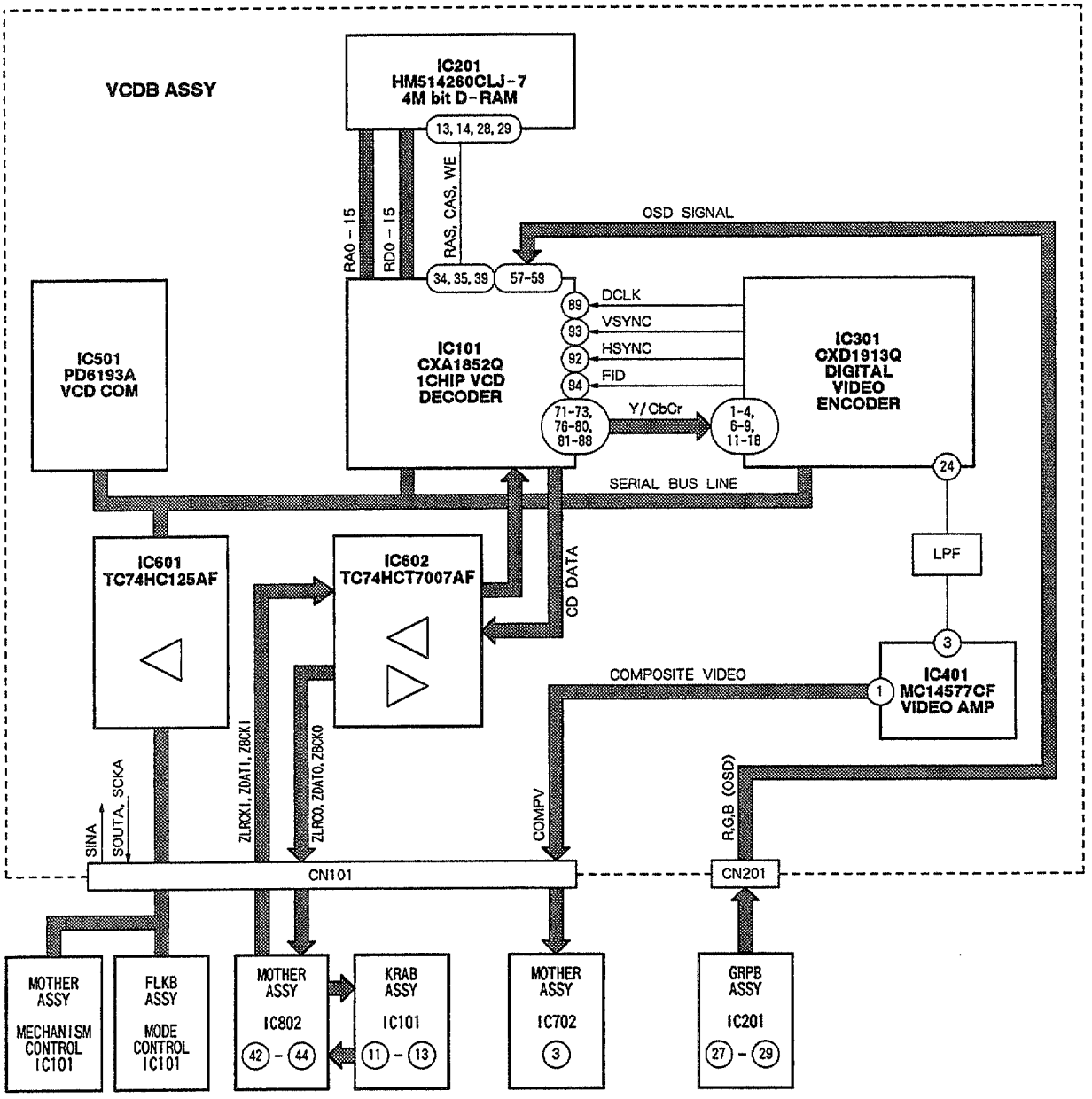
VCDB ASSY
IC201
HM514260CLJ-7
4M bit D-RAM
13, 14, 28, 29
RA0 – 15
RD0 – 15
RAS, CAS, WE
OSD SIGNAL
34, 35, 39
57-59
IC501
PD6193A
VCD COM
IC101
CXA1852Q
1CHIP VCD
DECODER
89 DCLK
93 VSYNC
92 HSYNC
94 FID
71-73, 76-80, 81-88
Y/CbCr
1-4, 6-9, 11-18
IC301
CXD1913Q
DIGITAL
VIDEO
ENCODER
24
SERIAL BUS LINE
LPF
IC601
TC74HC125AF
IC602
TC74HCT7007AF
CD DATA
3
IC401
MC14577CF
VIDEO AMP
1
COMPOSITE VIDEO
SINA
SOUTA, SCKA
ZLRCK1, ZDAT1, ZBCK1
ZLRC0, ZDAT0, ZBCK0
COMPV
R,G,B (OSD)
CN101
CN201
MOTHER ASSY
MECHANISM CONTROL IC101
FLKB ASSY
MODE CONTROL IC101
MOTHER ASSY
IC802
42 - 44
KRAB ASSY
IC101
11 - 13
MOTHER ASSY
IC702
3
GRPB ASSY
IC201
27 - 29

8. PANEL FACILITIES AND SPECIFICATIONS

■ FRONT PANEL

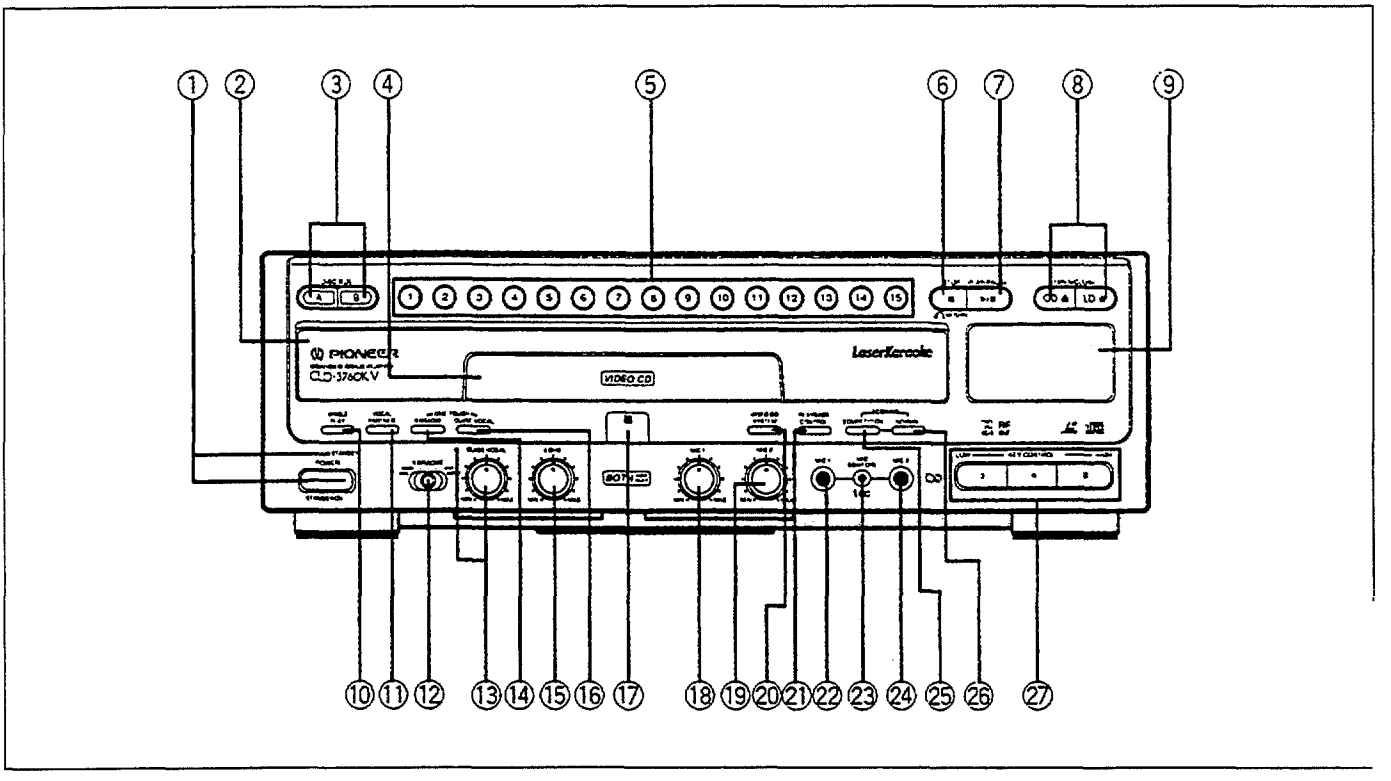

① **POWER STANDBY/ON switch and STANDBY indicator**
Press to turn the power on and off.
② **Disc table**
③ **DISC SIDE A/SIDE B buttons**
④ **CD Disc table**
⑤ **Direct music search buttons**
⑥ **STOP (■)/RETURN (∩) button**
⑦ **PLAY/PAUSE (▶/II) button**
⑧ **OPEN/CLOSE (CD ≜/LD ≜) buttons**
⑨ **Display window**
⑩ **SINGLE PLAY button/indicator**
⑪ **VOCAL PARTNER button/indicator**
⑫ **NORMAL/KARAOKE/AUX INPUT selector**
⑬ **GUIDE VOCAL level control/indicator**
⑭ **ONE-TOUCH KARAOKE button/indicator**
⑮ **ECHO level control**
⑯ **ONE-TOUCH GUIDE VOCAL button/indicator**
⑰ **Remote sensor**
⑱ **MIC 1 level control**
⑲ **MIC 2 level control**
⑳ **VIDEO CD SYSTEM button/indicator**
Press to switch the video output signal format from the VIDEO CD between NTSC and PAL. (Indicator lit)
㉑ **PLAYBACK CONTROL button/indicator**
㉒ **MIC 1 jack**
㉓ **MIC CONTROL jack**
㉔ **MIC 2 jack**
㉕ **SCORING COMPETITION button/indicator**
㉖ **SCORING NORMAL button/indicator**
㉗ **KEY CONTROL buttons**

■ DISPLAY WINDOW

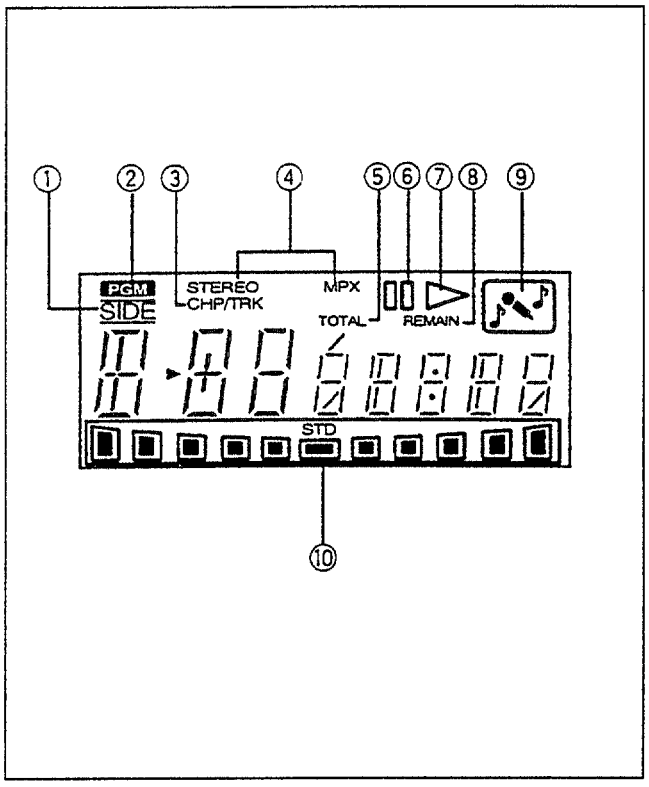

① **SIDE indicator**
② **PGM (Program) indicator**
③ **Chapter number/Track number indicator**
④ **Audio mode indicators**
Display the type of the played audio signal when the KARAOKE or AUX input is selected.
⑤ **TOTAL indicator**
⑥ **II Pause indicator**
⑦ **► Play indicator**
⑧ **REMAIN indicator**
⑨ **KARAOKE indicator**
⑩ **Key control indicator**

■ REMOTE CONTROL UNIT

Remote control buttons with the same names or marks as buttons on the front panel of the player control.

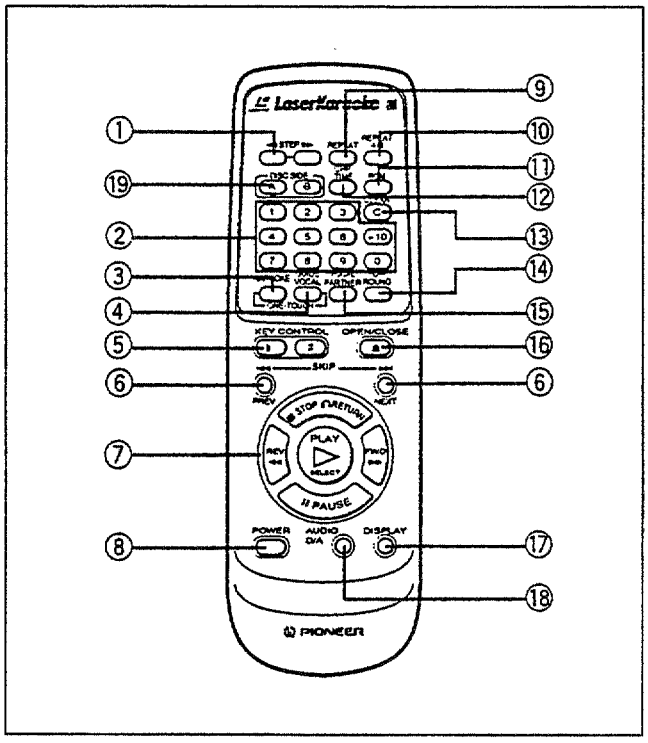

① **STEP (◄II II►) buttons**
② **Digit buttons**
③ **ONE-TOUCH KARAOKE button**
④ **ONE-TOUCH GUIDE VOCAL button**
⑤ **KEY CONTROL buttons**
⑥ **SKIP (I◄◄/PREV ►►I NEXT) buttons**
⑦ **Operation buttons**
■/ ∩ : STOP/RETURN button
► : PLAY/SELECT button
II : PAUSE button
◄◄/►► : Scan buttons
⑧ **POWER button**
⑨ **REPEAT button**
⑩ **REPEAT A-B button**
⑪ **PGM (Program) button**
⑫ **CHP/TIME (Chapter/Time) button**
⑬ **CLEAR button**
⑭ **SURROUND button**
⑮ **VOCAL PARTNER button**
⑯ **OPEN/CLOSE (≜) button**
⑰ **DISPLAY button**
⑱ **AUDIO D/A button**
⑲ **DISC SIDE A/B buttons**

■ SPECIFICATIONS

General

System ..... LaserVision Disc system and Compact Disc digital audio system
Laser ..... Semiconductor laser wavelength 780 nm
Power requirements ..... AC 110 - 127/220 - 240 V, 50/60 Hz
Power consumption ..... 38 W
Weight ..... 6.8 kg
Dimensions ..... 420 (W) x 412 (D) x 132 (H) mm
Operating temperature ..... +5 °C ~ +35 °C
Operating humidity ..... 5 % ~ 85 %
(There should be no condensation of moisture.)

Video characteristics (two pairs)

Format ..... NTSC specifications
PAL (VIDEO CD only)
Video output
Level ..... 1 Vp-p nominal, sync. negative, terminated
Impedance ..... 75 Ω unbalanced
Jack ..... RCA jack

Audio characteristics (two pairs)

Output level
During analog audio output ..... 200 mVrms (1 kHz, 40 %)
During digital audio output ..... 200 mVrms (1 kHz, -20 dB)
Jacks ..... Both RCA jacks
Number of channels ..... 2 (Stereo)

Other terminals

Control input/output ..... Both miniature jacks
AUX ..... RCA jacks
AC-3 · RF OUT PUT ..... RCA jack

Accessories

Remote control unit 1
Size "AAA" (IEC R03) dry cell batteries 2
Video cord 1
Audio cord 1
Power cord 1
Operating instructions 1
Warranty card 1

NOTE:
The specifications and design of this product are subject to change without notice, due to improvement.

When unpacking the player, first check to make sure that all of the accessories listed below are supplied.

- Remote control unit
- Size "AAA" (IEC R03) dry cell battery x 2

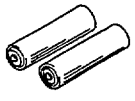

- Audio cord
(Pin plug x 2 ⟷ Pin plug x 2)
Use to connect the player to a stereo amplifier etc.

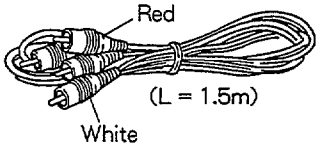

- Video cord
(Pin plug ⟷ Pin plug)
Use to connect the player to a color monitor etc.

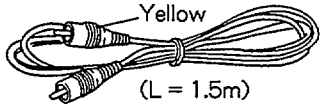

- Power cord
<Flat blade 2-pin AC plug model>

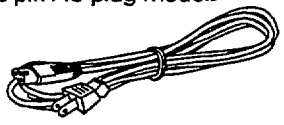

<Round blade 2-pin AC plug model>

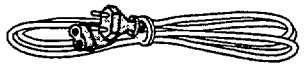

- Operating instructions
- Warranty card