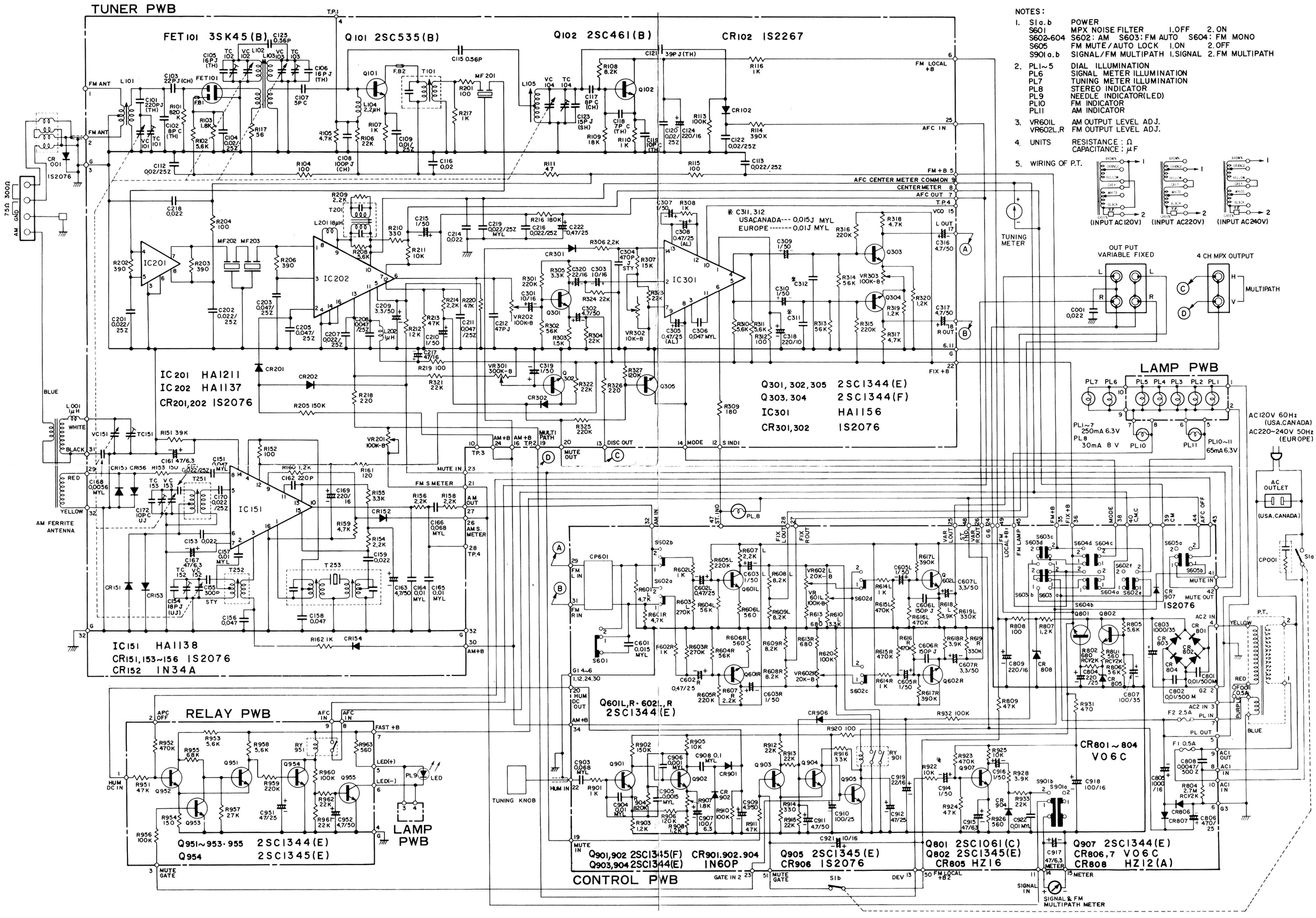
TUNER PWB
FET101 3SK45(B)
Q101 2SC535(B)
Q102 2SC461(B)
CR102 IS2267
IC201 HA1211
IC202 HA1137
CR201,202 IS2076
IC151 HA1138
CR151,153~156 IS2076
CR152 IN34A
Q301,302,305 2SC1344(E)
Q303,304 2SC1344(F)
IC301 HA1156
CR301,302 IS2076
※ C311,312
USACANADA--- 0.015J MYL
EUROPE------- 0.01J MYL
NOTES:
1. S1a.b POWER
S601 MPX NOISE FILTER 1.OFF 2.ON
S602~604 S602: AM S603: FM AUTO S604: FM MONO
S605 FM MUTE/AUTO LOCK 1.ON 2.OFF
S901a.b SIGNAL/FM MULTIPATH 1.SIGNAL 2.FM MULTIPATH
2. PL1~5 DIAL ILLUMINATION
PL6 SIGNAL METER ILLUMINATION
PL7 TUNING METER ILLUMINATION
PL8 STEREO INDICATOR
PL9 NEEDLE INDICATOR(LED)
PL10 FM INDICATOR
PL11 AM INDICATOR
3. VR601L AM OUTPUT LEVEL ADJ.
VR602L,R FM OUTPUT LEVEL ADJ.
4. UNITS RESISTANCE : Ω
CAPACITANCE : μF
5. WIRING OF P.T.
(INPUT AC120V)
(INPUT AC220V)
(INPUT AC240V)
OUT PUT VARIABLE FIXED
4 CH MPX OUTPUT
MULTIPATH
LAMP PWB
PL1~7 250mA 6.3V
PL8 30mA 8V
PL10~11 65mA 6.3V
AC120V 60Hz (USA.CANADA)
AC220~240V 50Hz (EUROPE)
AC OUTLET (USA.CANADA)
AM FERRITE ANTENNA
RELAY PWB
Q951~953·955 2SC1344(E)
Q954 2SC1345(E)
LAMP PWB
TUNING KNOB
CONTROL PWB
Q601L,R·602L,R 2SC1344(E)
Q901,902 2SC1345(F)
Q903,904 2SC1344(E)
CR901.902.904 1N60P
Q905 2SC1345(E)
CR906 IS2076
Q801 2SC1061(C)
Q802 2SC1345(E)
CR805 HZ16
Q907 2SC1344(E)
CR806,7 V06C
CR808 HZ12(A)
CR801~804 V06C
SIGNAL & FM MULTIPATH METER
TUNING METER