1997

MITSUBISHI Service Manual

PROJECTION TELEVISION
VZ4 CHASSIS

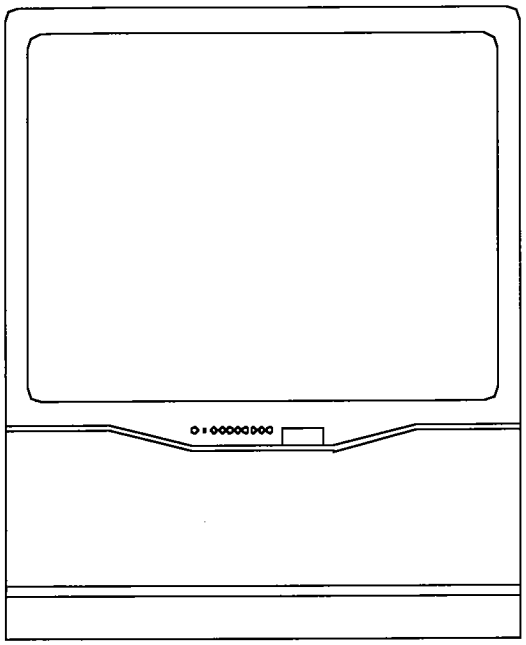

MODEL
VS-45501/VS-45502/VS-45501A
VS-50501/VS-50502/VS-50501A

CAUTION:
Before servicing this chassis, it is important that the service person read the "SAFETY PRECAUTIONS" AND "PRODUCT SAFETY NOTICE" in this manual.

SPECIFICATIONS

- **Power Input** : AC 120V, 60Hz
- **Power Consumption** : 260W
- **Frequency Range** : VHF 54 ~ 470MHz
  UHF 470 ~ 806MHz
- **Antenna Input** : VHF/UHF 75 Ω unbalanced
  Single axis input
- **CRT** :

[VS-45501/45502]	[VS-45501A]
180DLB22 (R)	180DLB22 (R)
180DLB22 (G)	180DLB22 (G)
180DLB22 (B)	180DLB22 (B)
[VS-50501]	[VS-50501A]
P16LJK01RJA (R)	P16LHV08RJA (R)
P16LJK01HKA (G)	P16LHV08HKA (G)
P16LJK01BMB (B)	P16LHV09BMB (B)
[VS-50502]	
P16LFM00RFA (R)	
P16LFM00HLA (G)	
P16LFM00BMB (B)	

- **High Voltage** : 32.0kV (at 0A)
- **Speaker** : 4" round type 2 pcs.
- **Cabinet Dimensions** : [VS-45501/ 45502/V45501A]
  : 39.5"(W) X 49"(H) X 23.4"(D)
  : [VS-50501/50502/50501A]
  43.5"(W) X 51.2"(H) X 24.3"(D)
- **Weight** : [VS-45501/45502/45501A] 190 lbs
  [VS-50501/50502/50501A] 195.8 lbs
- **Input Level** : VIDEO IN JACK (RCA Type)
  1.0Vp-p 75 Ω unbalanced
  : AUDIO IN JACK (RCA Type)
  -3 dBm 43kΩ unbalanced
  : S-VIDEO IN JACK
  (Y/C separate type)
  Y: 1.0 Vp-p C: 0.286Vp-p(BURST)
  75 Ω unbalanced
- **Output Level** : VIDEO OUT JACK (RCA Type)
  1.0Vp-p 75 Ω unbalanced
  : AUDIO OUT JACK (RCA Type)
  -3 dBm 4.7 KΩ unbalanced

- Weight and dimensions shown are approximate.
- Design specifications are subject to change without notice.

MITSUBISHI CONSUMER ELECTRONICS AMERICA, INC.
6100 Atlantic Blvd., Norcross, GA. 30071-1305
Copyright © 1997 Mitsubishi Consumer Electronics America, Inc.
All Rights Reserved

CONTENTS

INTRODUCTION 3
SAFETY PRECAUTIONS 4

DISASSEMBLY/FRONT AND REAR CABINET COMPONENTS 5

SERVICING PCBs 6
- PCB Locations 6
- Extension Cord Jigs Table 6

SERVICING OF THE LENTICULAR SCREEN AND FRESNEL LENS 7
- Removal of the Lenticular Screen and Fresnel Lens 7
- Installation of the Lenticular Screen and Fresnel Lens 8

CRT REPLACEMENT 10
- Removal of the CRT 10
- Installation of the CRT 11
- Adjustment procedures after replacing the CRT 12

ELECTRICAL ADJUSTMENTS 13
- Location of Test Points and Adjustments 14
- Initial Set Up 16
- Circuit Adjustment Mode 18
- When Replacing EEPROM (IC701) 20
- List of Adjustment Items 20
- Adjustment procedures 24
  - Multi Channel Sound Circuit 24
  - High Voltage Control Circuit 25
  - CRT Circuit 26
  - Focus Circuit 27
  - Video Circuit 28
  - Horizontal and Vertical Deflection Circuits 29
  - Raster Correction Circuit 30
  - Screen Character Circuit 31
  - Convergence Circuit 31
  - PIP Circuit 34

CHIP PARTS REPLACEMENT 36

PARTS LIST 37
- ELECTRICAL PARTS AND OTHERS 37

LEAD DRESS 46

SIGNAL PATH DIAGRAMS 48
IC BLOCK DIAGRAMS 50

INTRODUCTION

This service manual provides service instruction for PTV Models: VS-45501, VS-45502, VS-45501A, VS-50501, VS-50502 and VS-50501A which use the VZ4 Chassis. Service personnel should read this manual thoroughly before servicing this chassis.

This service manual includes:
1. Assembly and disassembly instructions for the front and rear cabinet components
2. Servicing of the lenticular screen and fresnel lens.
3. Servicing printed circuit boards (PCBs).
4. CRT replacement procedure.
5. Electrical adjustments.
6. Chip parts replacement procedures.
7. Lead dress diagram.

The parts list section of this service manual includes:
1. Cabinet and screen parts.
2. Electrical parts.

Schematic and block diagrams of PTV Models: VS-45501, VS-45502, VS-45501A, VS-50501, VS-50502 and VS-50501A are included in this service manual for better understanding of the circuitry. PCB drawings are also included for easy location of parts and test points.

PRODUCT SAFETY NOTICE

Many electrical and mechanical parts in television receivers have special safety related characteristics. These characteristics are often not evident from visual inspection nor can the protection afforded by them necessarily be obtained by using replacement components rated for higher voltage, wattage, etc.

Replacement parts which have special safety characteristics are identified in this service manual.

Electrical components having such features are identified by shading on the schematic diagram and on the parts list of this service manual, and by marking on the supplementary sheet for this chassis to be issued subsequently. Therefore, the replacement for any safety part should be identical in value and characteristics.

SAFETY PRECAUTIONS

NOTICE: Observe all cautions and safety related notes located inside the receiver cabinet and on the receiver chassis.

WARNING:

1. Operation of this receiver outside the cabinet or with the cover removed presents a shock hazard from the receiver's power supplies. Work on the receiver should not be attempted by anyone who is not thoroughly familiar with the precautions necessary when working on high voltage equipment.
2. Do not install, remove or handle the picture tubes in any manner unless shatterproof goggles are worn. People not so equipped should be kept away while the picture tube is being handled. Keep the picture tube away from the body while handling.
3. When service is required, observe the original lead dress. Extra precaution should be taken to assure correct lead dress in the high voltage area. Where a short-circuit has occurred, replace those components that indicate evidence of overheating.

B. X-radiation warning

The surface of the cathode ray tubes (CRTs) may generate X-Radiation, so take proper precautions when servicing. It is recommended that a lead apron be used for shielding while handling the CRT. Use this method if possible.
When replacing the CRTs, use only the designated replacement part since it is a critical component with regard to X-Radiation. As noted above, no high voltage adjustments are provided. The high voltage specification is described on the cover page.

C. Leakage current check

Before returning the receiver to the customer, it is recommended that leakage current be measured according to the following methods.

1. Cold Check

With the alternating current (AC) plug removed from the AC source, place a jumper across the two AC plug prongs. Connect one lead of an ohm meter to the AC plug and touch the other lead to each exposed metal part (i.e. antennas, handle bracket, metal cabinet, screw heads, metal overlay, control shafts, etc.), particularly any exposed metal part that has a return path to the chassis. The resistance of the exposed metal parts having a return path to the chassis should be a minimum of 1Mega Ohm. Any resistance below this value indicates an abnormal condition and requires corrective action.

2. Hot Check

Use the circuit in Figure 1 to perform the hot check test.

1. Keep switch S1 open and connect the receiver to the measuring circuit. Immediately after connection, and with the switching devices of the receiver in their operating positions, measure the leakage current for both positions of switch S2.
2. Close switch S1, energizing the receiver. Immediately after closing switch S1, and with the switching devices of the receiver in their operating positions, measure the leakage current for both positions of switch S2. Repeat the current measurements of items 1 and 2 after the receiver has reached thermal stabilization. The leakage current should not be more than 0.5 milliampere (mA).

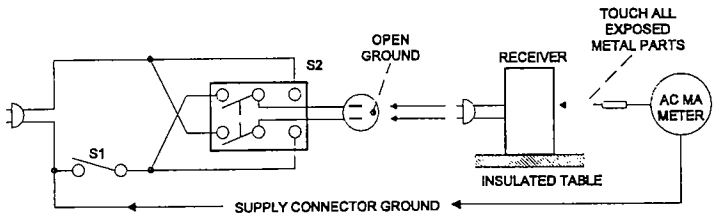

Figure 1

DISASSEMBLY/ FRONT AND REAR CABINET COMPONENTS

*Refer to PARTS LIST for Part Numbers

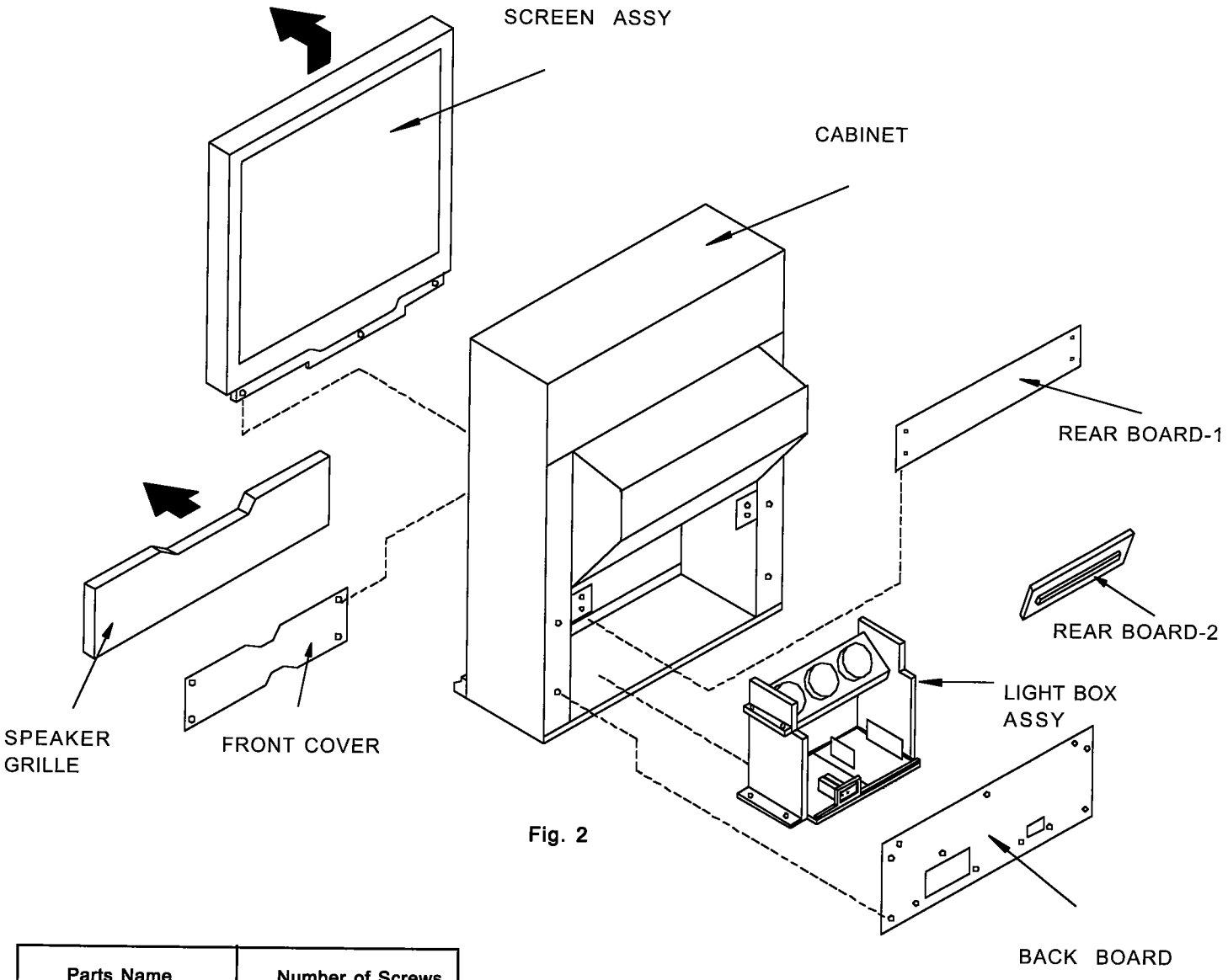

Fig. 2

Parts Name	Number of Screws
Screen Assy	3
Front Cover	4
Rear Board-1	4
Rear Board-2	2
Back Board	12
Light Box Assy	8

Table 1-2

SERVICING PCBs

PCB Locations

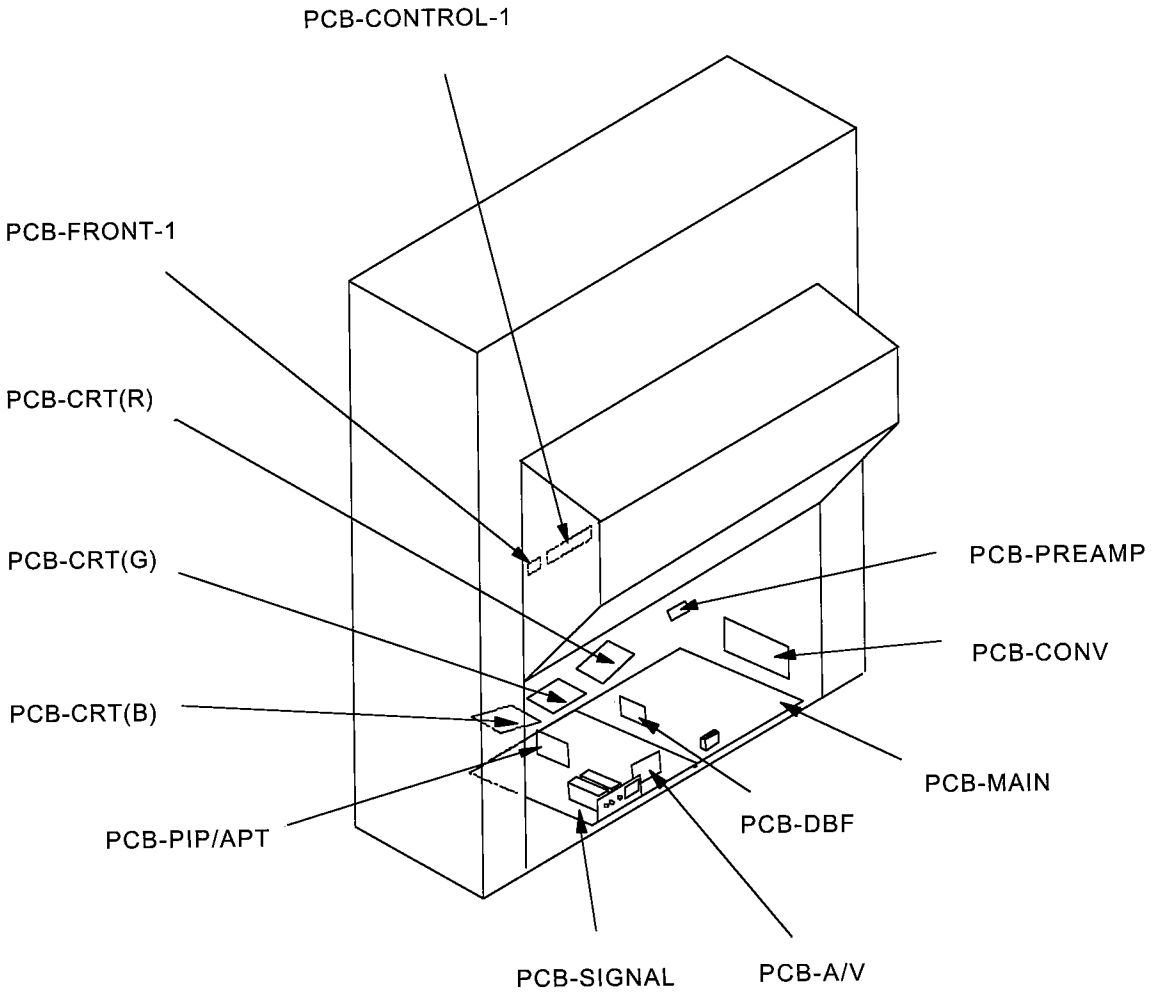

Fig. 3

Extension Cord Jigs Table

When servicing PCBs, use the Extension Cord Jigs for easier access.

PRINTED CIRCUIT BOARD	CONNECTOR	PART NUMBER
DBF	DV (3 PIN)	859C431060
DBF	DW (5 PIN)	859C432060
DBF	DU (7 PIN)	859C431070
PIP	GE (9 PIN), GF (9 PIN)	859C432050
A/V	GB (13 PIN)	859C432030
A/V	GA (11 PIN)	859C432040

* Extension Jigs for servicing of the PCB-Convergence are not listed as the existing leads are of sufficient length.

Table 2

SERVICING OF THE LENTICULAR SCREEN AND FRESNEL LENS

1. Removal of the Lenticular Screen and Fresnel Lens

A. VS-45501/VS-50501

1. Remove the screen assembly as shown in figure 2.
2. Remove Frame Holder by removing 12 screws (a).
3. Remove Screen Holder by removing 6 screws (b).

Note: When separating the Lenticular Screen from the Fresnel Lens, use caution while prying the Screen and Lens apart using a slot type screw driver, and remove the pressure sensitive, double sided tape.

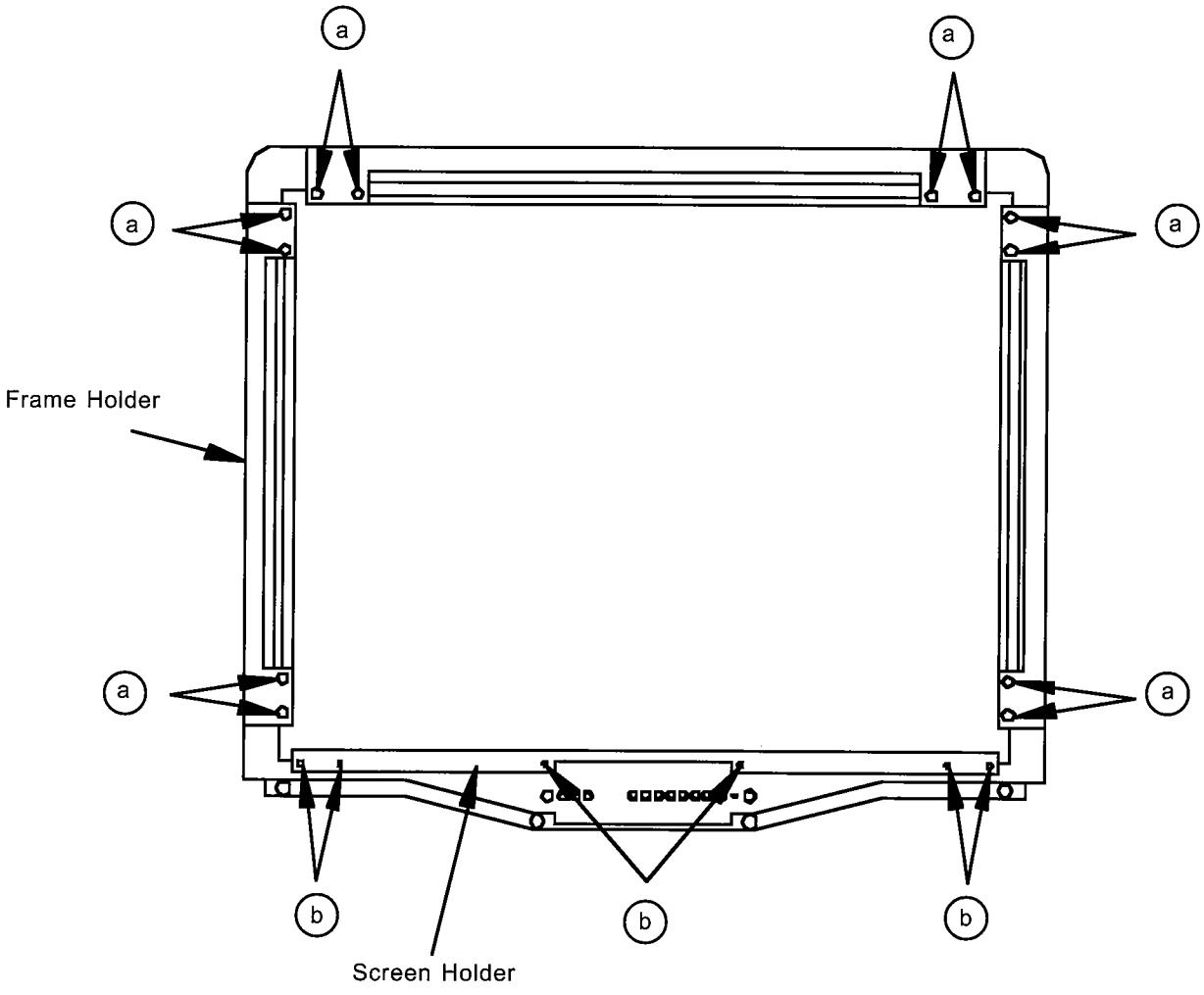

Figure 4-1

2. Installation of the Lenticular Screen and Fresnel Lens

CAUTION: WEAR GLOVES WHEN HANDLING THE LENTICULAR SCREEN AND THE FRESNEL LENS. THIS PREVENTS CUTS AND FINGER PRINTS.
DO NOT PLACE THE FRESNEL LENS IN THE SUN. THIS MAY CAUSE FIRE AND HEAT RELATED INJURIES.

Note: Store the Lenticular Screen and Fresnel Lens in a cool dry place. High humidity causes deformation of the Lenticular Screen and Fresnel Lens.

A. VS-45501

1. Apply double coated tape (Part # LENS-TAPE) along the top front edge of the Fresnel Lens as shown in figure 4-2.
2. Place the Fresnel Lens on top of the Lenticular Screen and apply pressure at the top edge to bond them together as shown in figure 4-2.

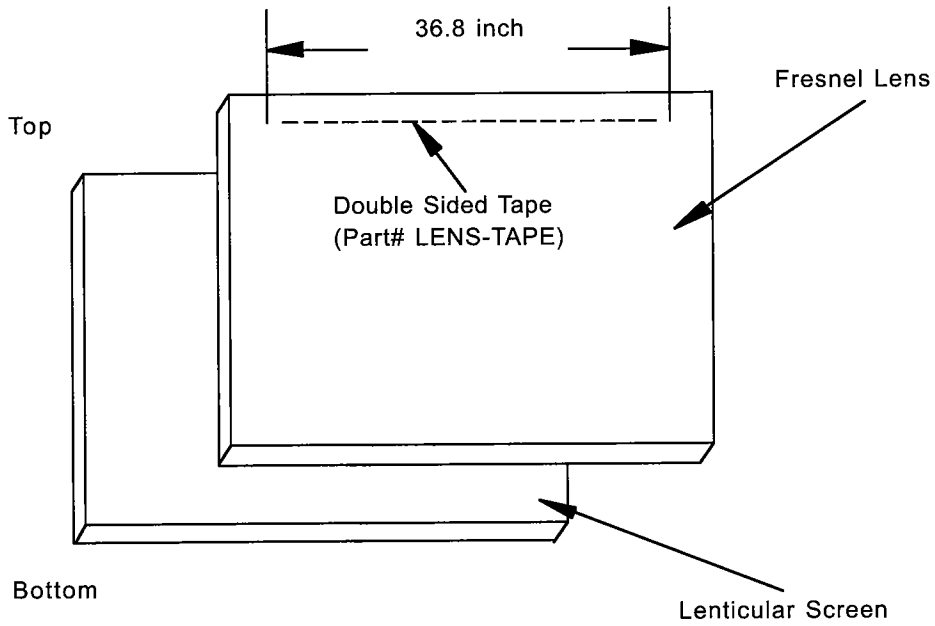

Figure 4-2

3. Installation of the Lenticular Screen and Fresnel Lens

CAUTION: WEAR GLOVES WHEN HANDLING THE LENTICULAR SCREEN AND THE FRESNEL LENS. THIS PREVENTS CUTS AND FINGER PRINTS.
DO NOT PLACE THE FRESNEL LENS IN THE SUN. THIS MAY CAUSE FIRE AND HEAT RELATED INJURIES.

Note: Store the Lenticular Screen and Fresnel Lens in a cool dry place. High humidity causes deformation of the Lenticular Screen and Fresnel Lens.

A. VS-50501

1. Apply double coated tape (Part # LENS-TAPE) along the top front edge of the Fresnel Lens as shown in figure 4-3.
2. Place the Fresnel Lens on top of the Lenticular Screen and apply pressure at the top edge to bond them together as shown in figure 4-3.

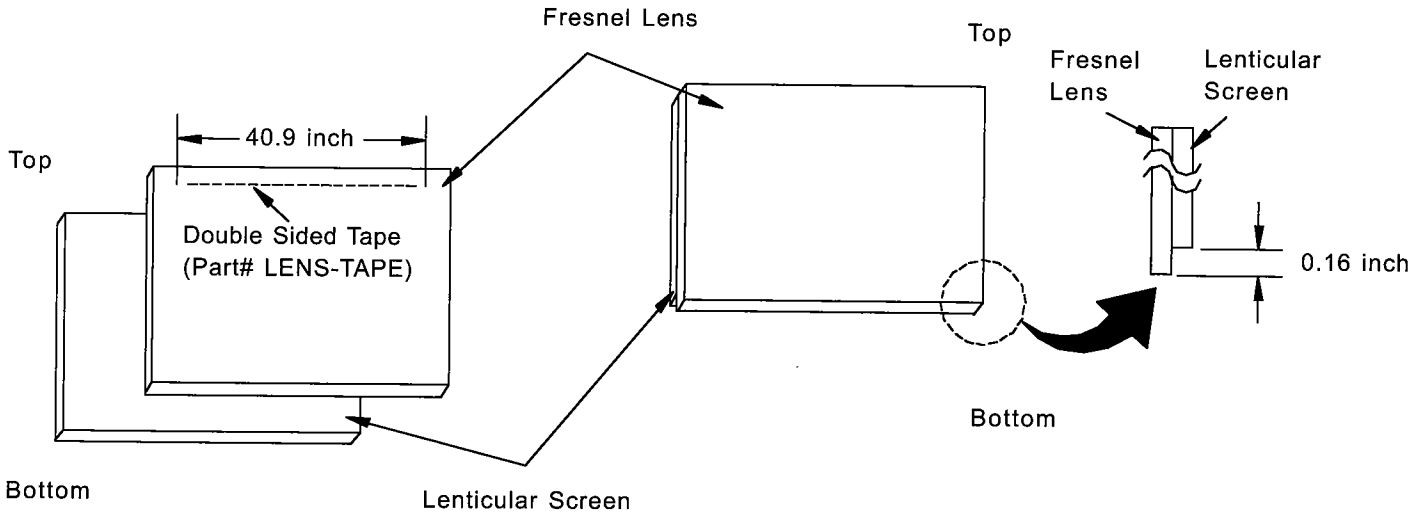

Fig. 4-3

CRT REPLACEMENT

1. Removal of the CRT

CAUTION! HIGH VOLTAGE SHOULD BE COMPLETELY DISCHARGED PRIOR TO ANODE CAP REMOVAL. SINCE ALL THREE CRTS RECEIVE HIGH VOLTAGE FROM THE FLYBACK TRANSFORMER, DISCHARGE EACH CRT BY SHORTING THE OPEN END OF EACH RESPECTIVE HIGH VOLTAGE CABLE TO CHASSIS GROUND.

Note: Refer to figures 2, and 2-1 when performing steps 1 through 4.

1. Remove the Speaker Grille.
2. Remove the Front Cover.
3. Remove the Screen Assy.
4. Remove the Back Board.
5. Remove the Anode Lead Wire from the Flyback Transformer.
6. Remove the PCB-CRT.
7. Remove 4 hex-screws "a" retaining the Optical Unit. [Fig. 5-1]
8. Remove 4 screws "b" retaining the Lens.
   Note: DO NOT loosen the RED screws. Doing so will break the seal between the C-Element and the # 6 Lens, causing leakage of the CRT Coolant.
9. Remove 4 screws "c" retaining the CRT. [Fig. 5-2]
10. Remove the Deflection Yoke from the neck of the CRT. [Fig. 5-7]

Fig 5-1

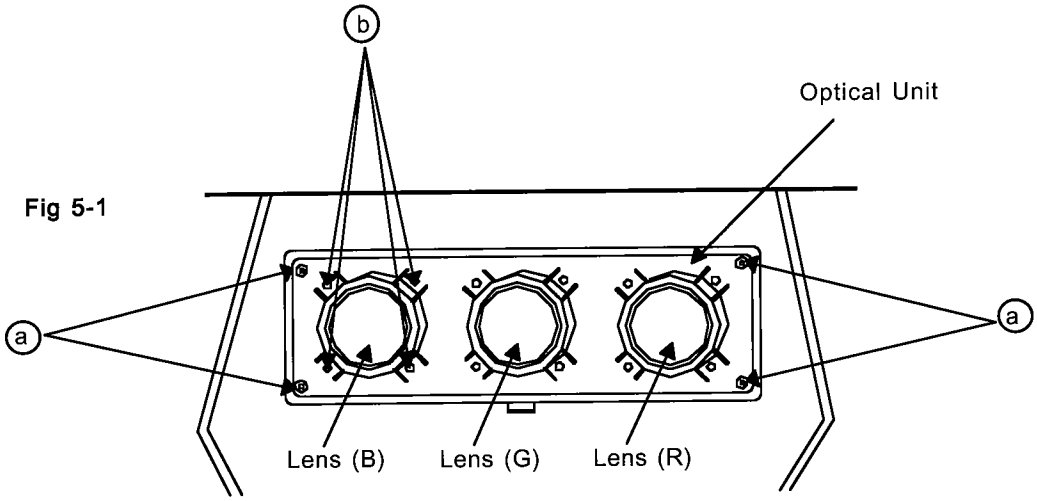

Fig 5-2

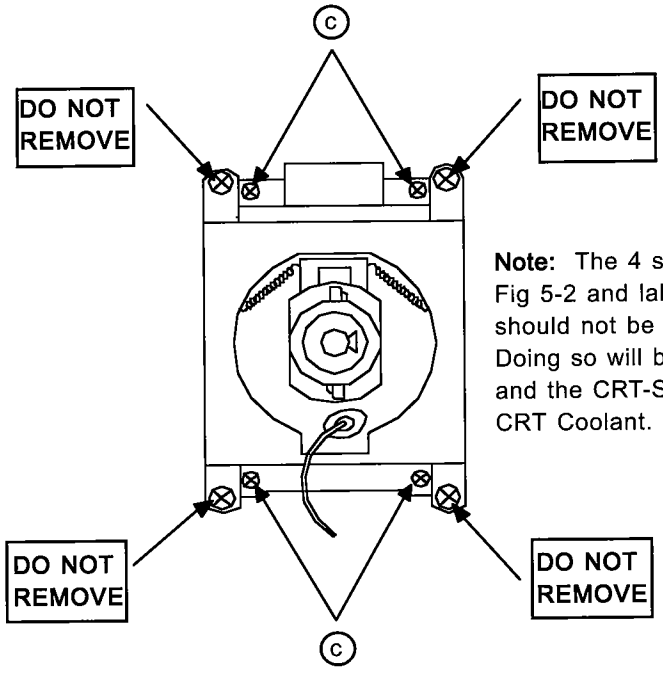

Note: The 4 spring-loaded screws shown in Fig 5-2 and labeled as "DO NOT REMOVE", should not be loosened under any circumstance. Doing so will break the seal between the CRT and the CRT-Spacer, causing leakage of the CRT Coolant.

INSTALLATION OF THE CRT

Note: The replacement CRT is supplied as an assembly comprised of the CRT and the Inner Lens with the space between them filled with ethylene glycol. Care should be taken during handling and installation to prevent shock from disrupting the seal or alignment between the CRT and Inner Lens. [Fig. 5-3]

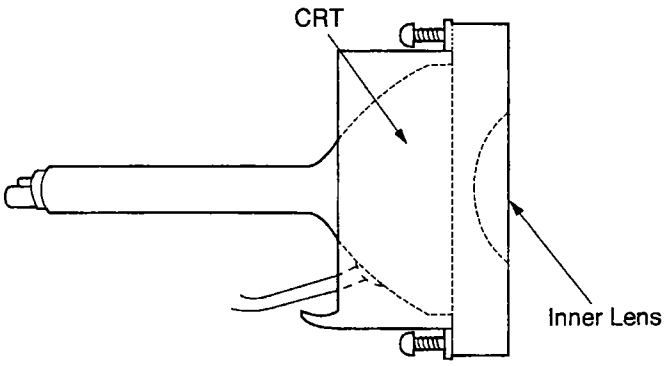

Fig 5-3

Note: The CRT fixing screws should not be loosened nor should they be removed. [Fig. 5-4]

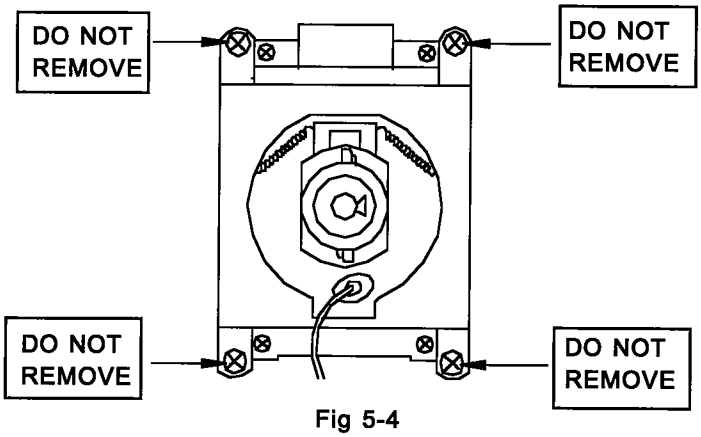

Fig 5-4

1. Carefully position the replacement CRT and fasten in place using 4 screws "d" shown in Fig. 5-6.

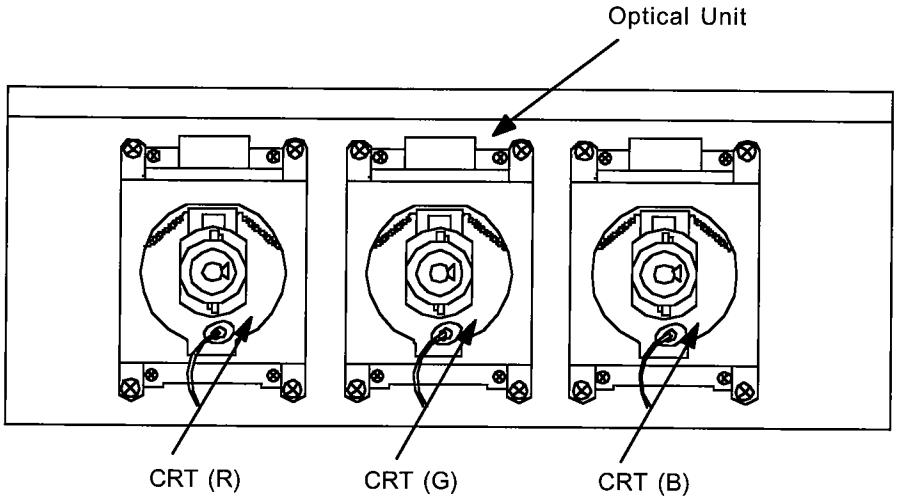

Fig 5-5

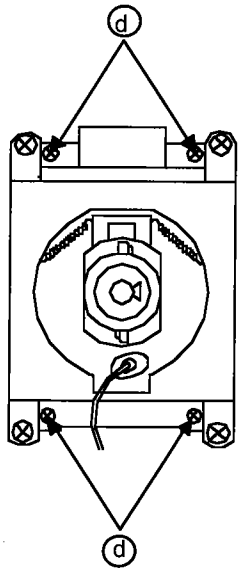

Fig 5-6

2. Install the Deflection Yoke on the CRT neck. [Fig. 5-7]
3. Install the Lens that was removed in steps 8 and 9 of Removal Of The CRT. [Figs. 5-1 and 5-2]
   a) Position the Lens so that the Label faces the direction shown in Fig. 5-8.
   b) Install the mounting screws. Refer to Fig. 5-1.
4. Install the PCB-CRT.
5. Insert the Optical Unit into the Light Box Assembly.
6. Insert the Anode Lead Wire into the Flyback Transformer.
7. Re-clamp the Lead Wire in its original position.
   Note: Refer to Lead Dress Diagrams pages 46-47.

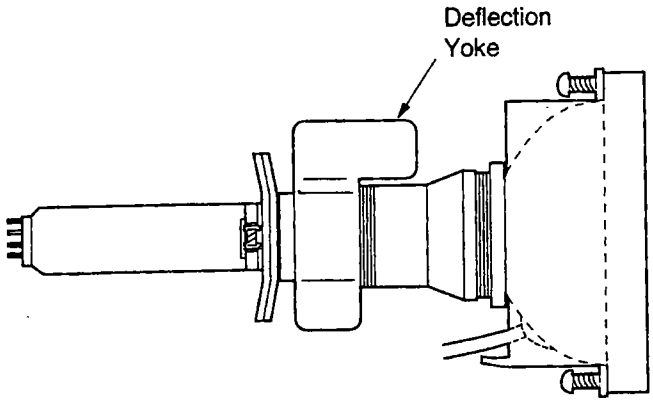

Fig 5-7

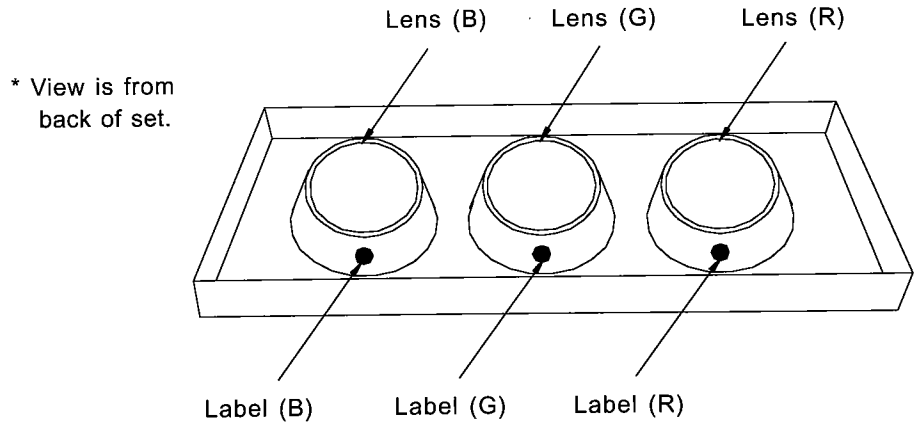

Fig 5-8

Adjustment procedures after replacing the CRT(s)

CRT Cut Off / White Balance Adjustment
Static Convergence Adjustment
Dynamic Convergence Adjustment

ELECTRICAL ADJUSTMENTS

Note: Perform only the adjustments required.
Do not attempt an alignment if proper equipment is not available.

1. Measuring Equipment and Jigs

* Oscilloscope (Unless otherwise specified, use 10:1 probes)
* Signal Generator
* Frequency Counter
* Direct Current Voltmeter
* Sweep Generator.
* Direct Current Power Supply
* Multiplex Audio Signal Generator
* Direct Current Ampere Meter

2. Test Signal

A. Monoscope Signal

Note: Connect the unit to a VCR and play an *alignment tape (Monoscope), if you do not have a monoscope signal source for adjustment.
(* Part Number: 859C568020)

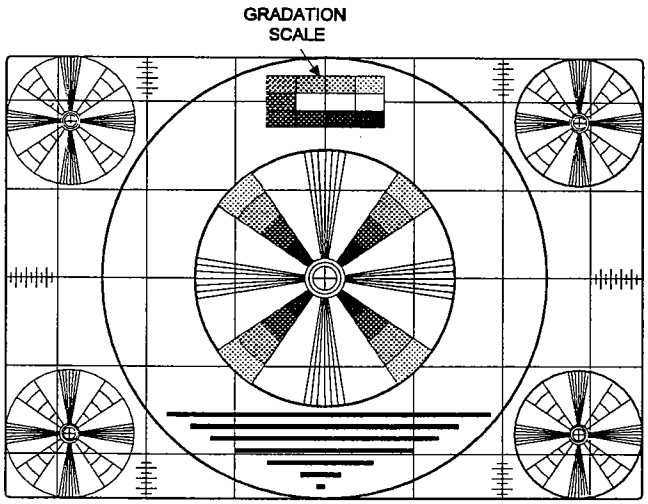

Monoscope Signal

B. Color Bar Signal

Use the color bar signal shown below, unless otherwise specified in this manual.

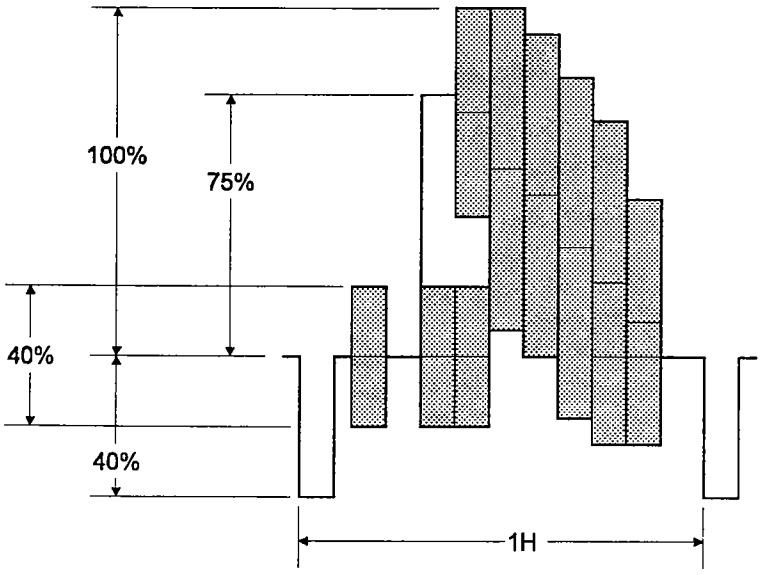

Split-Field Color Bars (100% window)

3. Location of Test Points and Adjustments

PCB-MAIN (COMPONENT SIDE)

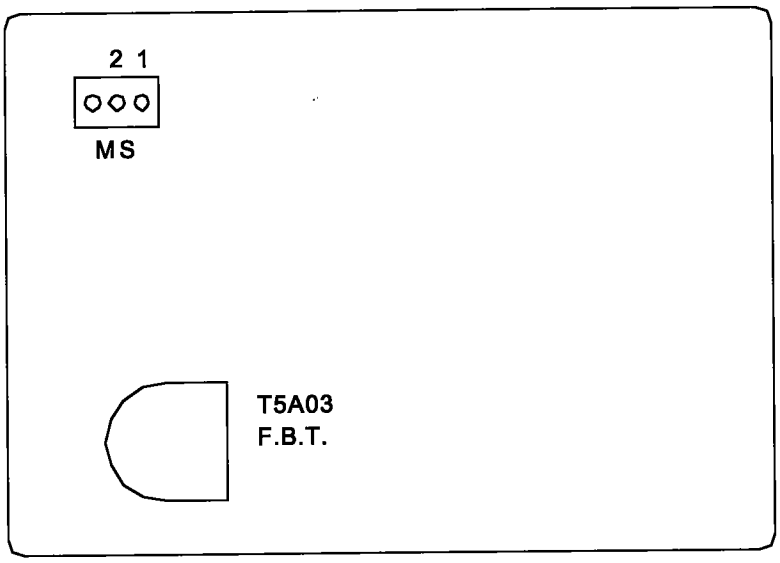

PCB-SIGNAL (COMPONENT SIDE)

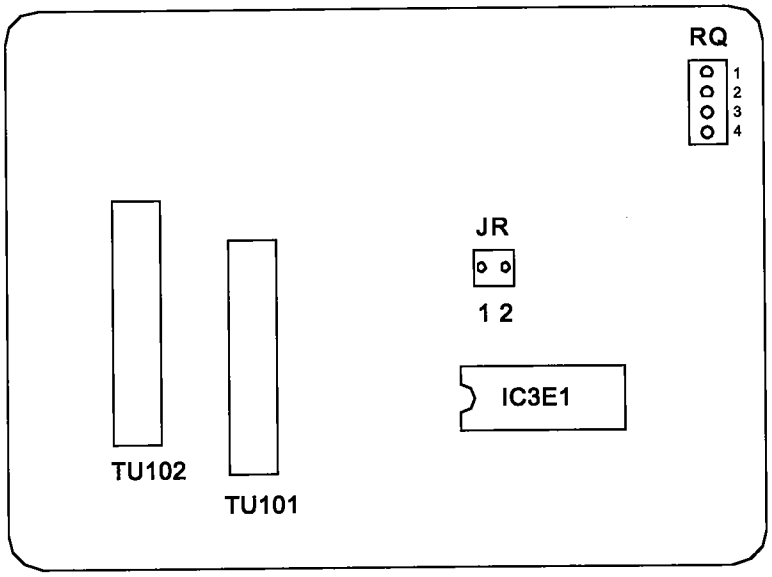

PCB-CRT (R)
(COMPONENT SIDE)

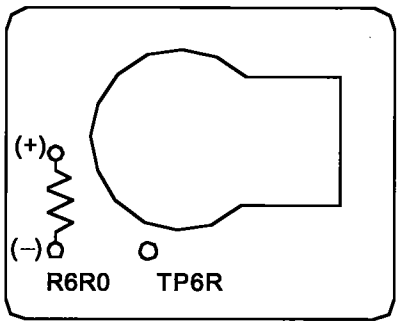

PCB-PIP/APT (COMPONENT SIDE)

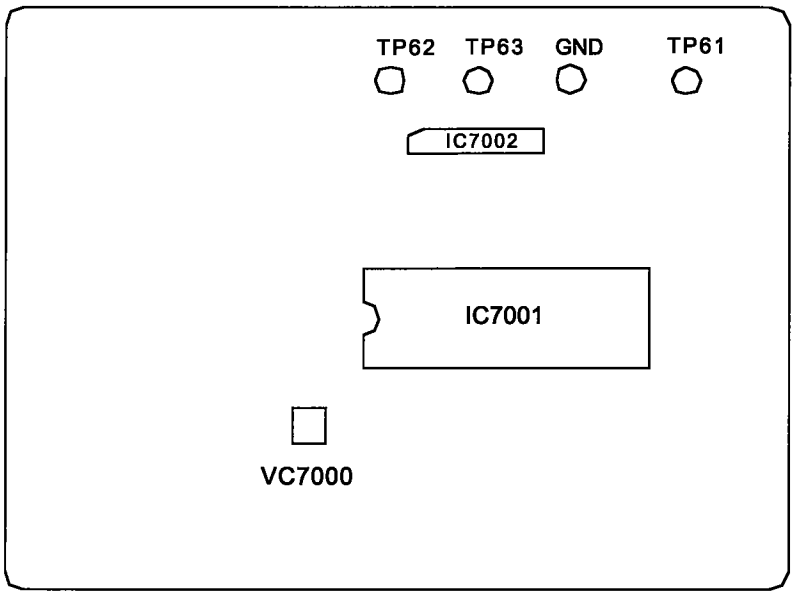

PCB-CRT (G)
(COMPONENT SIDE)

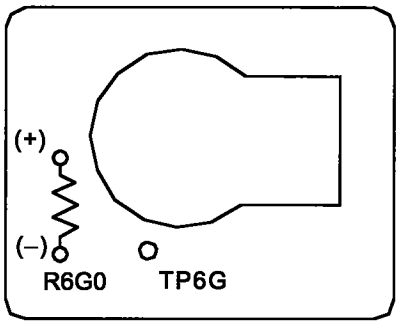

PCB-CRT (B)
(COMPONENT SIDE)

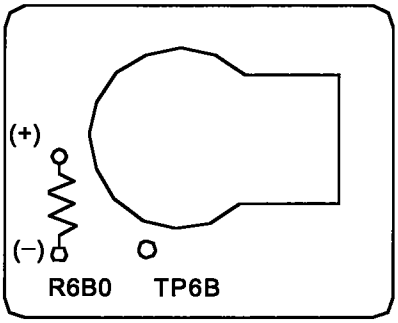

4. Option Menu Set Up

Follow the steps below for the Option Menu set up:

1. Set the receiver to the "TV" mode.
2. Select the "MENU" display by pressing the "MENU" button once.
3. Press the number buttons "2", "3", "5", "8" in sequence to select the "Option Menu" display.
4. Set the "Option Menu" as shown in the table below using the "ADJUST" and "ENTER" buttons.
5. Press the "MENU" button twice to return to normal viewing.

Option Menu

Initial	
Hotel	: OFF
Power Restore	: OFF
Antenna	: 2
Input	: 3
When Muting	: ON
Firmware Version Number	□.□□

Initial Settings

Initial Item	Initial Setting	Initial Item	Initial Setting
INPUT	TV	TV CC	When Muting
RECEIVING CH	CH OO3	PIP SOURCE	TV
TV / CATV	CATV	PIP POSITION	Lower Right
Q.V.	CH 003	VIDEO MUTE	OFF
CHANNEL MEMORY	ALL CH (0.0)	NAME THE INPUT	ALL LABELS CLEAR
TV Lock	OFF	S.Q.V.	ALL CH CLEAR
Channel Lock	OFF	AUTO CLOCK	ON
LOCK CODE	----	A/V NETWORK	OFF
VOLUME	30%	SELECT LANGUAGE	English
AUDIO FUNCTIONS		NAME THE CHANNEL	ALL LABELS CLEAR
Listen To	STEREO	SELECT MENU TYPE	Standard Menu
Bass	50%	Parental Lock	Cancel
Treble	50%		
Balance	50%		
Surround	OFF		
Speaker	ON		
Monitor Out	Variable		
Level Sound	OFF		
VIDEO FUNCTIONS			
TV IRIS	OFF		
Tint	50%		
Color	50%		
Contrast	100%		
Brightness	50%		
Sharpness	50%		
Color Temp	High		
Background	Gray		
TV Instant Info	ON		

5. Service Menu Set Up

Follow the steps below for the initial set up:

1. Select the "MENU" display by pressing the "MENU" button once.
2. Press the number buttons "1", "3", "7", "0" in sequence to select the "SERVICE MENU" display.
3. Press the "ADJUST" button to select "Initial."
4. Press "ENTER."

NOTE: At this time channel 3 is automatically selected.

CAUTION: DO NOT ACTIVATE E2 RESET AS THIS WILL RESET ALL ALIGNMENT DATA.

Service Menu

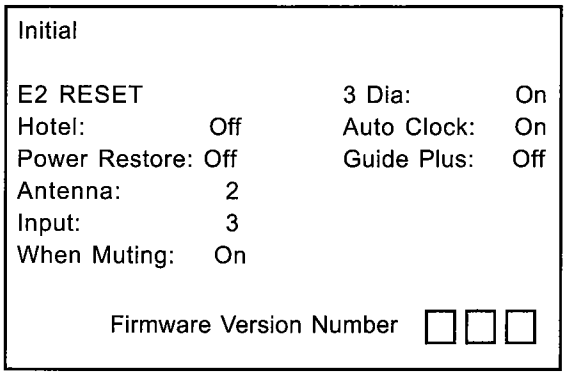

5. Circuit Adjustment Mode

Except for the following, all adjustment items must be performed using the remote hand unit.

Adj. Item	Description
6	Lens Focus
7	Electrostatic Focus

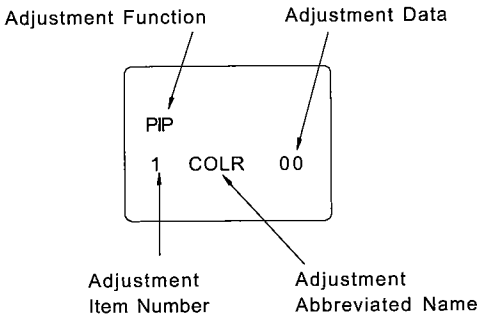

A. Activating the Circuit Adjustment Mode

1. Press the "MENU" button on a remote hand unit. (The "MENU" display will appear.)
2. Press the number buttons "2", "3", "5", "7" in sequence. (The screen will change to the circuit adjustment mode.)

Note: Repeat steps 1 and 2 if circuit adjustment mode does not appear on screen.

B. Selection of adjustment Functions and Adjustment Items

To select an adjustment item in the circuit adjustment mode, first select the adjustment function that includes the specific adjustment item to be selected. Then, select the adjustment item.
Refer to the following pages for the listing of adjustment functions and adjustment items.

1. Press the "AUDIO" button on a remote hand unit to select an adjustment function. Each time the button is pressed, the adjustment function changes in the following sequence.

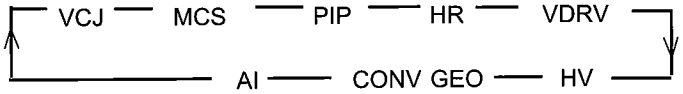

2. Press the "VIDEO" button to select a specific adjustment item. The adjustment item number increases each time the "VIDEO" button is pressed.

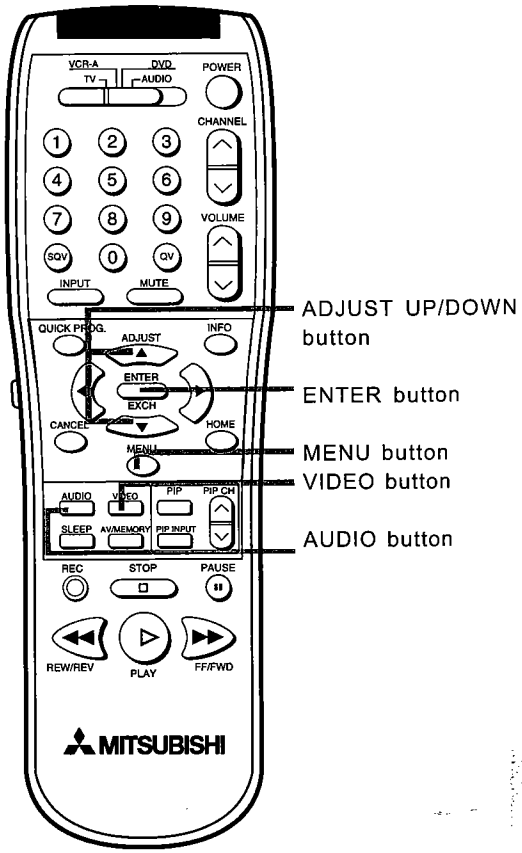

C. Changing data

After selecting an adjustment item, use the 'ADJUST" button to change the adjustment data.

D. Saving Adjustment Data

Press "ENTER" to save the adjustment data in memory. The character display turns red for approximately one second in this step.

Note: If the circuit adjustment mode is terminated without pressing the "ENTER" button, changes in adjustment data are not saved (with the exception of PIP adjustments).

E. Terminating the Circuit Adjustment Mode

Press the "MENU" button on the remote hand unit twice to terminate the circuit adjustment mode.

Note: The circuit adjustment mode can also be terminated by turning the power off.

When Replacing the EEPROM (IC701)

The EEPROM (IC701) stores the adjustment data. After replacing the EEPROM, readjust the data to the values given in the following tables. If good performance is not obtained with these values, perform the Adjustment Procedure(s) given in the Note column.

List of Adjustment Items

Function Item Number	Display Abbreviated Name	VCJ Adjustment Name	Range	Initial Data	IC200 Note
0	CON	PICTURE GAIN CONTROL	0~63	42	
1	TNT	TINT CONTROL 1	0~63	31	
2	COL	COLOR GAIN CONTROL 1	0~63	31	
3	BRT	BRIGHT LEVEL CONTROL 1	0~63	31	
4	SHP	SHARPNESS GAIN CONTROL	0~15	6	
5	CTG	G CUT-OFF ADJ.	0~15	7	#4 (CRT Cut Off, White Balance)
6	CTB	B CUT-OFF ADJ.	0~15	7	#4 (CRT Cut Off, White Balance)
7	DRG	G DRIVE GAIN ADJ.	0~63	42	#4 (CRT Cut Off, White Balance)
8	DRB	B DRIVE GAIN ADJ.	0~63	42	#4 (CRT Cut Off, White Balance)
9	LDG	LOW GREEN DRIVE GAIN	0~63	20	#4 (CRT Cut Off, White Balance)
10	LDB	LOW BLUE DRIVE GAIN	0~63	20	#4 (CRT Cut Off, White Balance)
11	YDL	Y CHROMA TRAP	0~1	0	
12	VM	Y OUTPUT FOR VM	0~1	0	
13	DCT	SW OF DC PROPAGATED RATE	0~1	1	
14	DPC	SW OF BLK LEVEL EXPANSION	0~1	1	
15	TOT	SW OF CHROMA TOT FILTER	0~1	0	
16	AXS	SW OF R-Y, G-Y AXIS	0~1	1	
17	DCO	SW OF DYNAMIC COLOR	0~1	1	
18	ABL	SW OF ABL MODE	0~1	0	
19	DL1	RATIO OF PRE/OVER-SHOOT	0~3	0	
20	DL2	SHARPNESS F0 CONTROL	0~3	1	
21	SCN	CONTRAST GAIN CONTROL	0~15	3	
22	CTA	CHROMA TRAP F0 ADJ.	0~15	7	
23	SCL	COLOR GAIN CONTROL	0~15	2	
24	SHU	TINT CONTROL	0~15	10	
25	SBR	BRIGHT LEVEL CONTROL	0~63	31	#10 (Black Level)
26	GMG	GAMMA CONTROL	0~3	2	
27	AG1	AGING MODE - WHITE OUTPUT	0~1	0	
28	AG2	AGING MODE - BLACK OUTPUT	0~1	0	
29	RON	R VIDEO OUTPUT	0~1	1	
30	GON	G VIDEO OUTPUT	0~1	1	
31	BON	B VIDEO OUTPUT	0~1	1	
32	PON	RGB VIDEO OUTPUT	0~1	1	
33	VOF	SW OF V-SAW OSCILLATION	0~1	1	
35	CMD	SW OF V COUNTDOWN	0~1	0	
37	VHT	VERTICAL HEIGHT	0~63	21	
40	AFC	AFC LOOP GAIN	0~3	1	
41	VSC	ADJ OF VERT S-CORRECTION	0~15	7	#9 (Vertical Linearity)
42	VLR	VERT LINEARITY ADJ.	0~15	7	#9 (Vertical Linearity)
44	RPO	REFERENCE PULSE TIMING	0~3	3	
47	HPS	HORIZ POSITION ADJ.	0~15	5	
51	ABW	VERT BOW CORRECTION	0~15	7	
52	AAG	VERT TILT CORRECTION	0~15	7	
55	HBL	H BLK ON SOFT-FULL MODE	0~1	1	
61	LBK	H BLK OF LEFT SIDE	0~15	9	
62	RBK	H BLK OF RIGHT SIDE	0~15	12	
69	SCT	PICTURE CONTROL	0~63	42	#7 (Sub Contrast)
70	ESY	*FACTORY SET-UP ONLY*	0~1	0	
71	CD2	*FACTORY SET-UP ONLY*	0~1	0	

Function Display		PIP		IC7001	
Item Number	Abbreviated Name	Adjustment Name	Range	Initial Data	Note
0	CONT	CONTRAST	0~127	48	#18 (PIP Contrast)
1	COLR	COLOR OUTPUT GAIN	0~127	34	#16 (PIP Chroma Gain)
2	TINT	TINT	0~63	28	#17 (PIP Sub Tint)
3	BRIT	BRIGHTNESS	0~31	15	
4	EMPH	EMPHASIS	0~1	1	
5	DECD	DECODE	0~1	0	
6	SYNC	SYNC LEVEL	0~3	3	
7	RVS	GREY BACKGROUND	0~1	0	
8	RVHS	FREE RUN CONTROL	0~1	0	
9	BG-Y	BACKGROUND LUMINANCE	0~16	12	
10	BSTB	BURST GAIN BLUE	0~255	76	
11	BSTR	BURST GAIN RED	0~255	145	
12	MVW	MACROVISION	0~255	0	
13	CRTN	FIXED DATA	0~3	3	
14	VXA	VERTICAL POSITION	0~255	145	
15	VXS	VERTICAL SAMPLING POSITION	0~63	41	
16	HXA0	HORIZONTAL POSITION	0~255	97	
17	ADJ	HORIZONTAL DELAY	0~3	4	
18	YDL	SUB Y DELAY	0~255	4	
19	HPX	SAMPLING STARTING POSITION	0~63	3	
20	VYA9	SUB VERTICAL WIDTH (1/9)	0~255	68	
21	HYA9	SUB HORIZONTAL WIDTH (1/9)	0~63	56	
22	VYA6	SUB VERTICAL WIDTH (1/6)	0~255	51	
23	HYA6	SUB HORIZONTAL WIDTH (1/6)	0~63	42	
24	BGBY	B-Y GAIN	0~7	4	
25	BGRY	R-Y GAIN	0~7	4	
26	CHRO	CHROMA ALIGNMENT	0~63	63	
27	EXTP	EXTENSION PORT	0~3	2	
28	BGPM	BURST GATE PULSE	0~1	1	
29	HX	SAMPLING START POSITION	0~63	22	
30	EXSY	ANALOG SYNC SEPARATOR	0~3	2	
31	LPF	LOW PASS FILTER	0~3	2	
32	BHS9	EXT/INT SYNC (1/9)	0~3	3	
33	BHS6	EXT/INT SYNC (1/6)	0~3	3	
34	HADJ	BGP POSITION	0~16	15	
35	BGST	BGP PHASE SETTING	0~63	14	
36	EXHD	EXT HD	0~3	0	
37	EXVD	EXT VD	0~1	0	
38	PN28	PIN 28 OUTPUT	0~63	1	
39	BGPX	BURST GATE PULSE OUTPUT ALIGNMENT	0~63	29	
40	BGPY	COLOR SATURATION ALIGNMENT	0~63	63	
41	BPF1	BANDPASS FILTER	0~3	0	
42	TACC	TEST ACC LEVEL	0~63	0	
43	ACC	ACC LEVEL	0~63	21	
44	FSC	*FACTORY ADJUSTMENT ONLY*	0~3	0	

Function Display	HR		
Adjustment Name	Range	Data	Note
Character Position	0~25	20	#12 CHR POS.

Function Display		MCS			IC3E1
Item Number	Abbreviated Name	Adjustment Name	Range	Initial Data	Note
0	INP	INPUT LEVEL ADJ	0~15	7	#1 (Input Level)
1	AUT	STEREO ADJ	0~1	0	
2	WDE	SPECTRAL WIDE	0~31	16	
3	SPC	SPECTRAL EXPANSION	0~31	16	
4	ATK	ATTACK TIME FOR AVL	0~3	1	#1 (Input Level)
5	VZX	ZERO CROSS VOLUME	0~1	1	#1 (Input Level)
6	MZX	ZERO CROSS MUTE	0~1	1	#1 (Input Level)

Function Display		VDRV			IC870
Item Number	Abbreviated Name	Adjustment Name	Range	Initial Data	Note
0	PCON	CONVERGENCE PHASE	0~255	128	
1	PFOC	FOCUS PHASE	0~255	0	DISPLAY ONLY
2	WCON	CONVERGENCE PULSE WIDTH	0~63	33	
3	WFOC	FOCUS PULSE WIDTH	0~63	44	DISPLAY ONLY
4	PLL	PLL DIVIDING RATIO	0~15	5	#14 (Dynamic Convergence)

Function Display		HV			IC8D00
Item Number	Abbreviated Name	Adjustment Name	Range	Initial Data	Note
0	HV	HIGH VOLTAGE CONTROL	0~254	150	#3 (HV Control)

Function Display		AI			
Item Number	Abbreviated Name	Adjustment Name	Range	Initial Data	Note
0	OT1	*AUTO IRIS* FACTORY ADJUSTMENT ONLY	0~255	60	
1	IT2		0~255	140	
2	CN0		0~63	02	
3	CN1		0~63	07	
4	CN2		0~63	63	
5	BR0		0~63	28	
6	BR1		0~63	30	
7	BR2		0~63	31	

Function Display		CONV GEO			IC8G00
Item Number	Abbreviated Name	Adjustment Name	Range	Data	Note
0	HWID	HORIZ WIDTH	0~254	127	#10 (Horizontal Width)
1	TILT	TILT	0~254	127	#11 (Raster Correction)
2	VBOW	VERT BOW	0~254	127	#11 (Raster Correction)
3	SKEW	SKEW	0~254	127	#11 (Raster Correction)
4	HBOW	HORIZ BOW	0~254	127	#11 (Raster Correction)
5	TBPC	TOP/BOTTOM PIN CUSHION	0~254	127	#11 (Raster Correction)
6	EWPC	EAST/WEST PIN CUSHION	0~254	127	#11 (Raster Correction)
7	VIPC	VERT INSIDE PIN CUSHION	0~254	127	#11 (Raster Correction)
8	HIPC	HORIZ INSIDE PIN CUSHION	0~254	127	#11 (Raster Correction)
9	HKEY	HORIZ KEYSTONE	0~254	127	#11 (Raster Correction)
10	VKEY	VERT KEYSTONE	0~254	127	#11 (Raster Correction)
11	VSBW	VERT SIDE BOW	0~254	127	#11 (Raster Correction)
12	VSTL	VERT SIDE TILT	0~254	127	#11 (Raster Correction)
13	V3RD	VERT 3RD CORRECTION	0~254	127	#11 (Raster Correction)
14	V4TH	VERT 4TH CORRECTION	0~254	127	#11 (Raster Correction)
15	HSBW	HORIZ SIDE BOW	0~254	127	#11 (Raster Correction)
16	HSKW	HORIZ SIDE SKEW	0~254	127	#11 (Raster Correction)
17	H3RD	HORIZ 3RD CORRECTION	0~254	127	#11 (Raster Correction)
18	HSSS	HORIZ SIDE S CORRECTION	0~254	127	#11 (Raster Correction)
19	HLIN	HORIZ LINEARITY	0~254	127	#11 (Raster Correction)
20	HSLN	HORIZ SIDE LINEARITY	0~254	127	#11 (Raster Correction)

Function Display		CONV			Red: IC8D00 Blue: IC8E00
Item Number	Abbreviated Name	Adjustment Name	Range	Data	Note
Red Blue					
0 30	HSTA	HORIZ STATIC	0~254	127	#14 (Dynamic Convergence)
1 31	VSTA	VERT STATIC	0~254	127	#14 (Dynamic Convergence)
2 32	TILT	VERT TILT	0~254	127	#14 (Dynamic Convergence)
3 33	BOW	VERT BOW	0~254	127	#14 (Dynamic Convergence)
4 34	SKEW	SKEW	0~254	127	#14 (Dynamic Convergence)
5 35	HBOW	HORIZ BOW	0~254	127	#14 (Dynamic Convergence)
6 36	VWID	VERT HEIGHT	0~254	127	#14 (Dynamic Convergence)
7 37	VLIN	VERT LINEARITY	0~254	127	#14 (Dynamic Convergence)
8 38	HWID	HORIZ WIDTH	0~254	127	#14 (Dynamic Convergence)
9 39	HLIN	HORIZ LINEARITY	0~254	127	#14 (Dynamic Convergence)
10 40	HSDL	LEFT HORIZ SIDE	0~254	127	#14 (Dynamic Convergence)
11 41	HSDR	RIGHT HORIZ SIDE	0~254	127	#14 (Dynamic Convergence)
12 42	SLIN	HORIZ LIN MIDDLE (1)	0~254	127	#14 (Dynamic Convergence)
13 43	CLIN	HORIZ LIN MIDDLE (2)	0~254	127	#14 (Dynamic Convergence)
14 44	VKLU	VERT KEYSTONE (L-UPPER)	0~254	127	#14 (Dynamic Convergence)
15 45	HKLU	HORIZ KEYSTONE (L-UPPER)	0~254	127	#14 (Dynamic Convergence)
16 46	VKLL	VERT KEYSTONE (L-LOWER)	0~254	127	#14 (Dynamic Convergence)
17 47	HKLL	HORIZ KEYSTONE (L-LOWER)	0~254	127	#14 (Dynamic Convergence)
18 48	VKRL	VERT KEYSTONE (R-LOWER)	0~254	127	#14 (Dynamic Convergence)
19 49	HKRL	HORIZ KEYSTONE (R-LOWER)	0~254	127	#14 (Dynamic Convergence)
20 50	VKRU	VERTKEYSTONE (R-UPPER)	0~254	127	#14 (Dynamic Convergence)
21 51	HKRU	HORIZ KEYSTONE (R-UPPER)	0~254	127	#14 (Dynamic Convergence)
22 52	LHBW	HORIZ SLOPING ENDS (LEFT)	0~254	127	#14 (Dynamic Convergence)
23 53	RHBW	HORIZ SLOPING ENDS (RIGHT)	0~254	127	#14 (Dynamic Convergence)
24 54	LVBW	VERT SLOPING ENDS (LEFT)	0~254	127	#14 (Dynamic Convergence)
25 55	RVBW	VERT SLOPING ENDS (RIGHT)	0~254	127	#14 (Dynamic Convergence)
- 56	DA42	KEYSTONE OFFSET	0~254	127	#14 (Dynamic Convergence)
27 57	DA50	----	0~254	127	Display Only
28 58	DA51	----	0~254	127	Display Only
29 59	DA52	----	0~254	127	Display Only

[MULTI CHANNEL SOUND CIRCUIT]

1. Input Level

Adjustment purpose Set the level of the input signal for the multi channel sound circuit.

Symptom when incorrectly adjusted Distorted sound during an MCS broadcast.

Measuring Instrument	Oscilloscope
Test Point	Connector "JR" pin 2
Exit Trigger	-----
Measurement range	DIV 50mV TIME 2ms
Input Signal	RF signal (Monaural Sound)
Input Terminal	RF IN terminal

1. Supply an RF signal (monaural sound 400Hz 100% MOD).
2. Connect the oscilloscope to connector "JR" pin 2.
3. Press the "MENU" button on a remote hand unit.
4. Press the numerical buttons 2-3-5-7 in sequence to change the screen to the circuit adjustment mode.
5. Set the adjustment function to "MCS" by pressing the "AUDIO" button.
6. Initialize adjustment values to those shown in the table below by pressing the "VIDEO" and "ADJUST" buttons.
7. Select adjustment item "0 INP" using the "VIDEO" button.
8. Set the adjustment data so that the amplitude is 500 ± 20 mVrms (1.41 ± 0.05Vp-p)
9. Press "ENTER" to write the adjustment data into memory.
10. Press the "MENU" button twice to terminate the circuit adjustment mode.

Note: *Adjustment item 2 (Stereo Separation) must be performed after this adjustment.*

PCB-SIGNAL (COMPONENT SIDE)

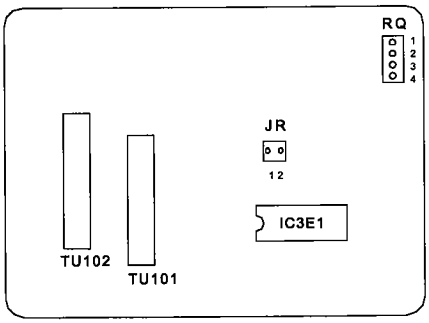

Adjustment Abbreviated Name	Initial Data
0 INP	7
1 AUT	0
2 WDE	16
3 SPC	16
4 ATTK	1
5 VZX	1
6 MZX	1

[MULTI CHANNEL SOUND CIRCUIT]

2. Separation

Adjustment purpose Adjust right and left separation.

Symptom when incorrectly adjusted Poor or no stereo separation.

Measuring Instrument	Oscilloscope
Test Point	Connector "JR" pin 2
Exit Trigger	-----
Measurement range	Division 10mV Time 2ms
Input Signal	RF signal (Stereo Sound)
Input Terminal	RF IN terminal

Note: *This adjustment must follow item 1 (Input Level)*

1. Supply an RF signal (L-CH stereo sound 300Hz 30% MOD).
2. Connect the oscilloscope to connector "JR" pin 2.
3. Press the "MENU" button on a remote hand unit.
4. Press the numerical buttons 2-3-5-7 in sequence to change the screen to the circuit adjustment mode.
5. Set the adjustment function to "MCS" by pressing the "AUDIO" button.
6. Make sure that the value of item"3 SPC" is 16.
7. Select adjustment item "2 WDE" using the "VIDEO" button
8. Using the "ADJUST" button, set the adjustment data so that the amplitude of the 300Hz waveform is at minimum.
9. Change the modulation fequency to 3kHz.
10. Select adjustment item "3 SPC" using the "VIDEO" button.
11. Using the "ADJUST" button, set the adjustment data so that the amplitude of the 3kHz waveform is at minimum.
12. Repeat steps 7 and 8 .
13. Press "ENTER" to write the adjustment data into memory.
14. Press the "MENU" button twice to terminate the circuit adjustment mode.

PCB-SIGNAL (COMPONENT SIDE)

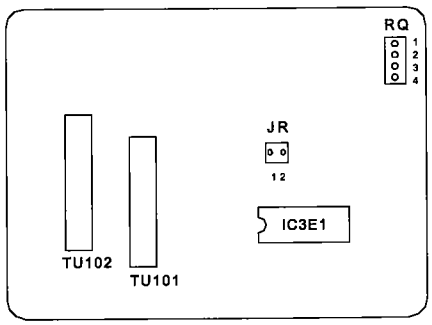

[High Voltage Circuit]	Adjustment purpose	CRT anode voltage.
3. High Voltage Control	Symptom when incorrectly adjusted	Too dark picture.

Measuring Instrument	DC Voltmeter
Test Point	- Lead: pin 1 of connector DQ + Lead: pin 2 of connector DQ
Exit Trigger	-----
Measurement range	----
Input Signal	VIDEO signal (Monoscope)
Input Terminal	VIDEO IN terminal

PCB-MAIN (COMPONENT SIDE)

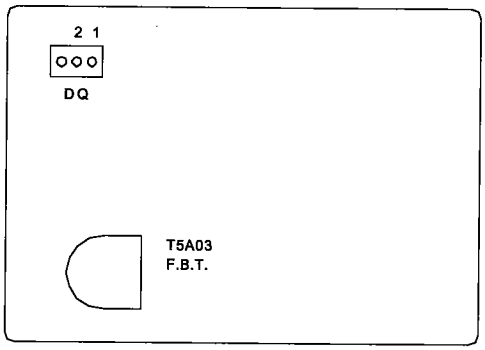

Note: *This adjustment must follow item 4 (CRT Cut OFF, White Balance). Set the CONTRAST control to maximum and BRIGHTNESS control to center position..*

1. Supply a VIDEO signal (monoscope).
2. Observe the DC voltage between pins 1 and 2 of connector DQ. (positive lead to pin 2).
3. Press the "MENU" button on a remote hand unit.
4. Press the numerical buttons 2-3-5-7 in sequence to change the screen to the circuit adjustment mode.
5. Set the adjustment function to "HV" by pressing the "AUDIO" button.
6. Select the adjustment item "0 HV" using the "VIDEO" button.
7. Set the adjustment data so the DC voltmeter reads 0.15 ± 0.005V using the "ADJUST" button.
8. Press "ENTER" to write the adjustment data into memory.
9. Press the "MENU" button twice to terminate the circuit adjustment mode.
10. Confirm the voltage at DQ pin 2 does not exceed 0.85V.
11. If voltage exceeds this limit, repeat adjustment procedure.

[CRT Circuit]	Adjustment purpose	To set the cut off point of the three CRTs
4. CRT Cut Off, White Balance	Symptom when incorrectly adjusted	Monochrome with color tint, or incorrect brightness.

Measuring Instrument	DC Ammeter Oscilloscope
Test Point	TP6R/G/B
Exit Trigger	-----
Measurement Range	Division 5V Time 2ms
Input Signal	----
Input Terminal	

1. Select the EXT-1 input with no signal supplied.
2. Press the "MENU" button on a remote hand unit.
3. Press the numerical buttons 2-3-5-7 in sequence to change the screen to the circuit adjustment mode.
4. Set the adjustment function "VCJ " by pressing the "AUDIO" button.
5. Set the items shown in the Table to the given data values.
6. Observe the waveform at TP6R.
7. Adjust the SCREEN control (R) so that the voltage is 200V.
8. Observe the waveform at TP6G.
9. Adjust the SCREEN control (G) so that the voltage is 200V.
10. Observe the waveform at TP6B.
11. Adjust the SCREEN control (B) so that the voltage is 200V.

Abbreviated Name	Data
3 BRT	31
5 CTG	7
6 CTB	7
7 DRG	42
8 DRB	42
25 SBR	31

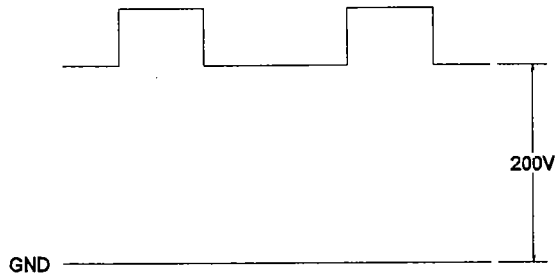

12. Supply a VIDEO signal (full white raster)
13. Set adjustment data of "7 DRG" and "8 DRB" so that the white level is optimum at the center of the screen.
14. Observe the waveform at "TP6G".
15. Set the data of "5 CTG" so that the voltage is 200V.
16. Observe the waveform at "TP6B".
17. Set the data of "6 CTB" so the the voltage is 200V.
18. Measure the DC current as indicated in Table 1.

    Note: *The internal resistance of the ammeter must be 30 Ω or less, and the length of the lead wires should be 12 inches or less. Measure the current in the three CRTs at the same time. Make sure that the current in the GREEN and BLUE CRTs does not exceed the values shown in Table 2. If excessive, readjust the current to the approximate values given in Table 3 and repeat steps 1-18.*
19. Press "ENTER" to write the adjustment data into memory.
20. Press the "MENU" button twice to terminate the circuit adjustment mode.

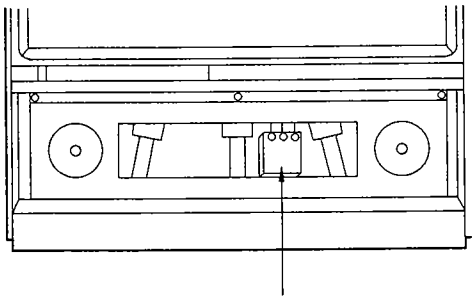

FRONT VIEW

	Connections of Ampere Meter	
	Positive	Negative
R	R6R0 (+ SIDE)	R6R0 (- SIDE)
G	R6G0 (+ SIDE)	R6G0 (- SIDE)
B	R6B0 (+SIDE)	R6B0 (- SIDE)

Table 1

	Maximum Current
G	580μA
B	530μA

Table 2

Current Proportion		
R	G	B
225μA	540μA	485μA

Table 3

[Focus Circuit]	Adjustment purpose	The best resolution of the picture.
5. Lens Focus	Symptom when incorrectly adjusted	Blurred picture.

Measuring Instrument	-----
Test Point	-----
Exit Trigger	-----
Measurement range	-----
Input Signal	VIDEO signal (Monoscope)
Input Terminal	VIDEO IN terminal

Note: *This adjustment must follow item 6 (Electrostatic Focus). Perform this adjustment for RED, GREEN, and BLUE monochrome pictures.*

1. Supply a VIDEO signal (monoscope).
2. Produce a GREEN monochrome picture.
   a) Press the "MENU" button on a remote hand unit.
   b) Press the buttons 2-3-5-9 then press the button specified in the table below to select each color.
3. Adjust the position of the lens for the best picture resolution.
   NOTE: *Attach a white paper to the inside center of the screen. During adjustment, observe the picture on the screen from inside for easier adjustment.*
4. Display the original picture and press "MENU" twice.

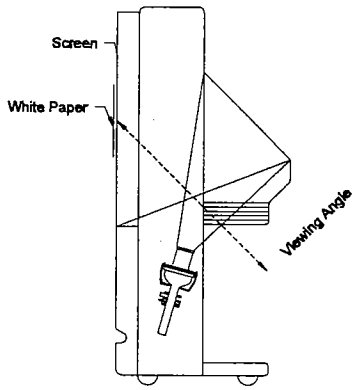

Monochrome Picture	Remote Hand Unit Button
RED	1
GREEN	2
BLUE	3

[Focus Circuit]	Adjustment purpose	For best resolution of the picture.
6. Electrostatic Focus	Symptom when incorrectly adjusted	Out of focus picture.

Measuring Instrument	-----
Test Point	-----
Exit Trigger	-----
Measurement range	-----
Input Signal	VIDEO signal (Monoscope)
Input Terminal	VIDEO IN terminal

Note: *This adjustment must follow item 7 (Sub Contrast). If you replace the CRT, this adjustment must follow item 5, (Lens Focus). Perform this adjustment respectively for RED, GREEN, and BLUE monochrome pictures.*

1. Supply a VIDEO signal (monoscope).
2. Press the "A/V RESET" button in the control panel to reset all VIDEO FUNCTIONS.
3. Produce a monochrome picture.
   a) Press the "MENU" button on a remote hand unit.
   b) Press the buttons 2-3-5-9 then press the button specified in the table below to select each color.
4. Adjust the FOCUS VR on the focus pack so the sharpness of the upper area of the screen is optimum.
5. Display the original picture and press "MENU" twice.

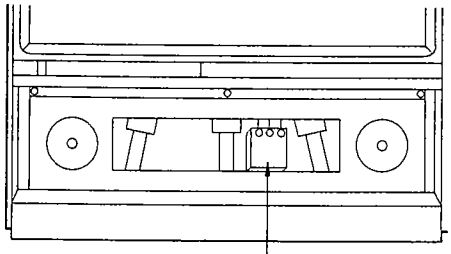

FRONT VIEW

Monochrome Picture	Remote Hand Unit Button
RED	1
GREEN	2
BLUE	3

[Video Circuit]

7. Sub Contrast

Adjustment purpose To set the beam current to its optimum value.

Symptom when incorrectly adjusted Excessive or insufficient contrast.

Measuring Instrument	DC Milliammeter
Test Point	+ Lead: pin 3 of connector MS - Lead: pin 1 of connector MS
Exit Trigger	-----
Measurement range	3mA
Input Signal	RF signal (Gray scale 87.5% MOD)
Input Terminal	RF IN terminal

Note: *This adjustment must follow item 4 (CRT Cut-Off, White Balance).*
Preheat the set for two minutes or more.

1. Supply an RF signal (gray scale 87.5% MOD).
2. Press the "MENU" button on a remote hand unit.
3. Press the numerical buttons 2-3-5-7 in sequence to change the screen to the circuit adjustment mode.
4. Set the adjustment function "VCJ " by pressing the "AUDIO" button.
5. Select the adjustment item "69 SCT" using the "VIDEO" button.
6. Measure the current at pins 1 and 3 of connector MS (Plus lead to pin 3).
7. Set the adjustment data so the DC milliammeter reads 725 ± 25µA..
8. Press "ENTER" to write the adjustment data into memory.
9. Press the "MENU" button twice to terminate the circuit adjustment mode.

PCB-MAIN (COMPONENT SIDE)

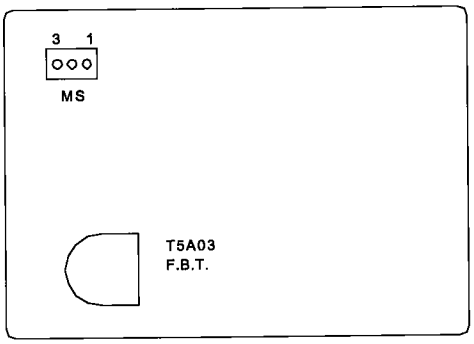

[Video Circuit]

8. Black Level

Adjustment purpose Picture Luminance.

Symptom when incorrectly adjusted Excessive or insufficient brightness.

Measuring Instrument	-----
Test Point	-----
Exit Trigger	-----
Measurement range	-----
Input Signal	VIDEO signal (Monoscope)
Input Terminal	VIDEO IN terminal

Note: *This adjustment must follow item 7 (Sub-Contrast).*

1. Supply an VIDEO signal (monoscope).
2. Press the "MENU" button on a remote hand unit.
3. Press the numerical buttons 2-3-5-7 in sequence to change the screen to the circuit adjustment mode.
4. Set the adjustment function "VCJ " by pressing the "AUDIO" button.
5. Select the adjustment item "25 SBR" using the "VIDEO" button.
6. Observe the gradation pattern inside a monoscope signal, and set the adjustment data so that both levels, at the 10% and 0% areas of the gradation pattern, are the same (black level 8%) using the "ADJUST" button.
7. Press "ENTER" to write the adjustment data into memory.
8. Press the "MENU" button twice to terminate the circuit adjustment mode.

40%	30%	20%	10%
50%	0%	0%	0%
60%	70%	80%	90%

GRADATION SCALE

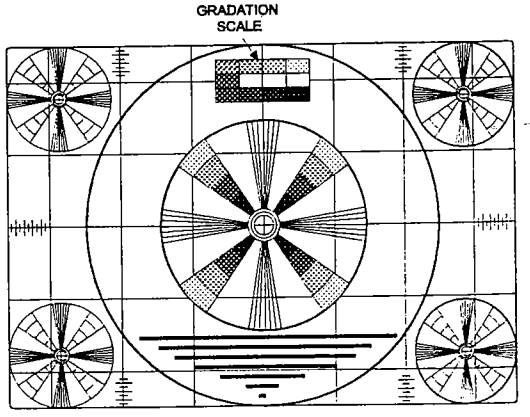

[Deflection Circuit]	Adjustment purpose	To set vertical linearity.
9.Vertical Linearity, Height and S-Correction	Symptom when incorrectly adjusted	Incorrect vertical height and linearity.

Measuring Instrument	-----
Test Point	-----
Exit Trigger	-----
Measurement range	-----
Input Signal	VIDEO signal (Monoscope)
Input Terminal	VIDEO IN terminal

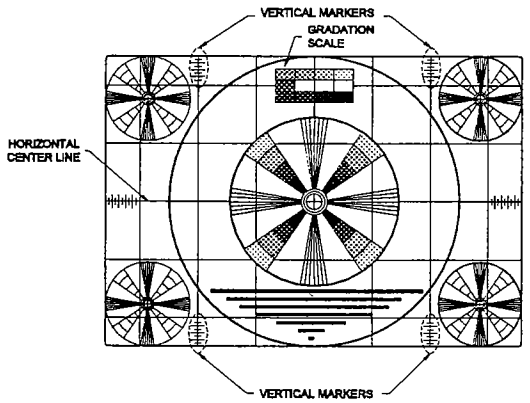

1. Supply a VIDEO signal (monoscope)
2. Press the "MENU" button on a remote hand unit.
3. Press the numerical buttons 2-3-5-7 in sequence to change the screen to the circuit adjustment mode.
4. Set the adjustment function to "VCJ" by pressing the "AUDIO" button.
5. Select adjustment item "47 VHT" using the "VIDEO" button. Adjust so that the vertical markers are equal using the "ADJUST" button.
6. Select the adjustment item "42 VLR" using the "VIDEO" button
7. Set the adjustment data so that the largest circle is round using the "ADJUST" button.
8. Supply a VIDEO signal (crosshatch).
9. Select the adjustment item "41 VSC"(Vertical S) using the "VIDEO" button.
10. Set the adjustment data so that the height of the squares in the cross hatch signal are equal at the top, bottom and middle of the screen using the "ADJUST" button.
11. Press "ENTER" to write the adjustment data into memory.
12. Press the "MENU" button twice to terminate the circuit adjustment mode.

[Deflection Circuit]	Adjustment purpose	To set the width of the picture.
10. Horizontal Width	Symptom when incorrectly adjusted	Picture compressed or expanded horizontally.

Measuring Instrument	-----
Test Point	-----
Exit Trigger	-----
Measurement range	-----
Input Signal	VIDEO signal (Monoscope)
Input Terminal	VIDEO IN terminal

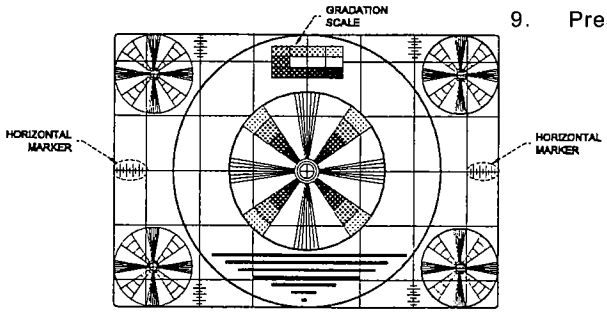

Note: *This adjustment must follow item 4 (CRT Cut Off, White Balance) and item 3 (High Voltage Control). Perform this adjustment alternately with item 11 (Raster Distortion Correction).*

1. Supply a VIDEO signal (monoscope).
2. Cover the RED and BLUE lenses, producing a GREEN monochrome picture.
3. Press the "MENU" button on a remote hand unit.
4. Press the numerical buttons 2-3-5-7 in sequence to change the screen to the circuit adjustment mode.
5. Set the adjustment function to "CONV GEO" by pressing the "AUDIO" button.
6. Select the adjustment item "0 HWID" using the "VIDEO" button.
7. Set the adjustment data so the sum of the horizontal width markers is 6.0 using the "ADJUST" button.
8. Press "ENTER" to write the adjustment data into memory.
9. Press the "MENU" button twice to terminate the circuit adjustment mode.

[Raster Correction Circuit] 11. Raster Correction	Adjustment purpose	To correct picture distortion.
	Symptom when incorrectly adjusted	Distorted picture.

Measuring Instrument	
Test Point	----
Exit Trigger	----
Measurement Range	----
Input Signal	VIDEO signal (Crosshatch)
Input Terminal	VIDEO IN terminal

1. Supply a VIDEO signal (Crosshatch)
2. Cover the RED and BLUE lenses, producing a GREEN crosshatch picture.
3. Press the "MENU" button on a remote hand unit.
4. Press the buttons 2-3-5-7 in sequence.
   (The screen will change to the circuit adjustment mode.)
5. Set the function to "CONV GEO." ("AUDIO" button)
6. Set the data of the items below so that all the green horizontal and vertical lines are straight and spacing is linear.
7. Write the data into memory. (Press "ENTER")
8. Terminate the circuit adjustment mode. (Press "MENU" twice)

NOTE: *Adjusment 14 (Dynamic Convergence) must be performed immediately after this adjustment.*

0 HWID

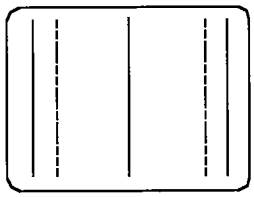

6 EWPC

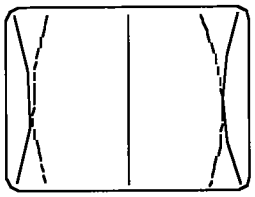

12 VSTL

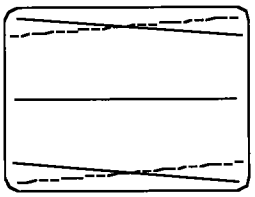

18 HSSS

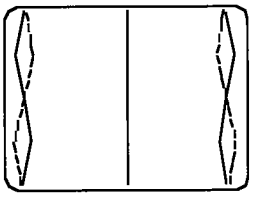

1 TILT

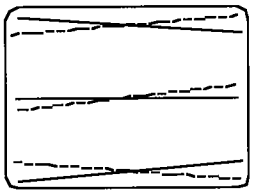

7 VIPC

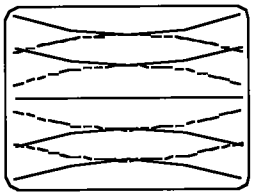

13 V3RD

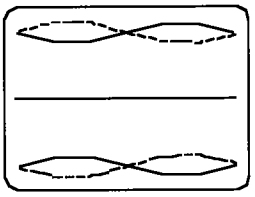

19 HLIN

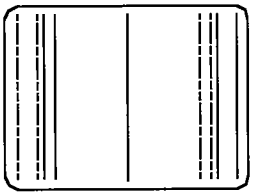

2 VBOW

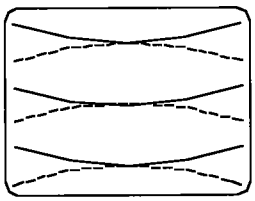

8 HIPC

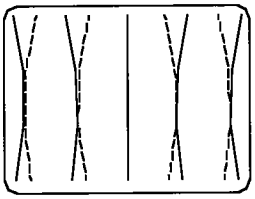

14 V4TH

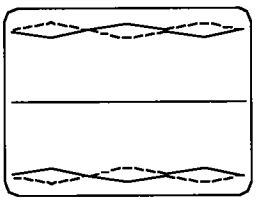

20 HSLN

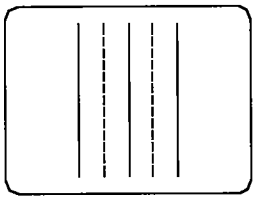

3 SKEW

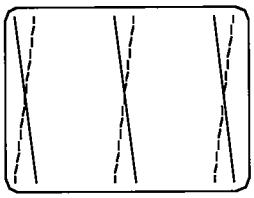

9 HKEY

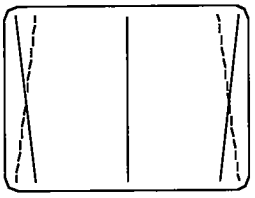

15 HSBW

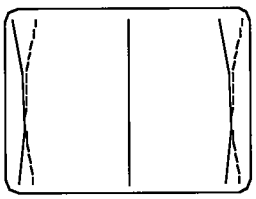

4 HBOW

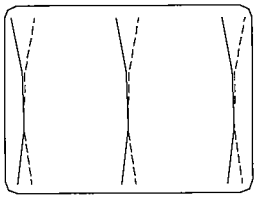

10 VKEY

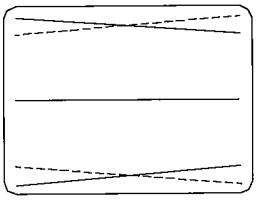

16 HSKW

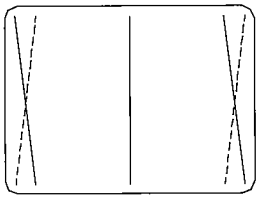

5 TBPC

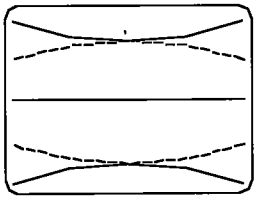

11 VSBW

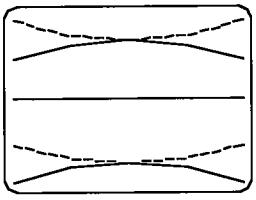

17 H3RD

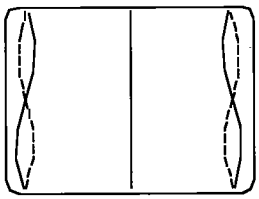

[Screen Character Circuit]	Adjustment purpose	To position the character display.
12. Character Position	Symptom when incorrectly adjusted	Incorrect Character position

Measuring Instrument	-----
Test Point	-----
Exit Trigger	-----
Measurement range	-----
Input Signal	Standard RF Broadcast
Input Terminal	Antenna A/B

1. Supply a VIDEO signal (Monscope).
2. Press the "MENU" button on a remote hand unit.
3. Press the buttons 2-3-5-7 in sequence.
   (The screen will change to the circuit adjustment mode.)
4. Set the function to "HR" using the "AUDIO" button.
5. Using the "ADJUST" button, align so that the widths for A and B are equal.

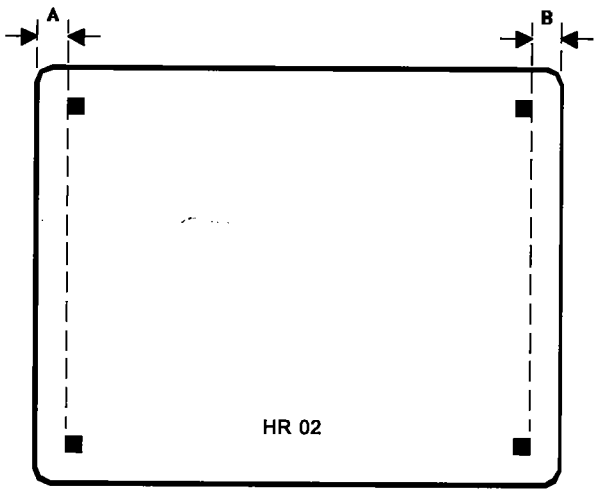

[CRT]	Adjustment purpose	To correct convergence caused by installation direction.
13. Static Convergence	Symptom when incorrectly adjusted	Color edging.

Measuring Instrument	-----
Test Point	-----
Exit Trigger	-----
Measurement range	-----
Input Signal	VilDEO signal (Crosshatch)
Input Terminal	VIDEO IN terminal

1. Degauss the shield cover and bracket unit of the CRT assembly and chassis sheet metal.
2. Supply a VIDEO signal (crosshatch).
3. Make sure that the vertical linearity is generally correct. If not, change the adjustment data of "VCJ" item "42 VLR" in the circuit adjustment mode so that the vertical height and linearity is roughly correct. (refer to Adjustment 9).
4. Cover the RED and BLUE lenses with lens caps to produce a GREEN monochrome picture. Rotate the centering magnet attached to the GREEN CRT, so that the center of the displayed crosshatch signal is set at the screen center.
5. Remove lens caps covering the RED and BLUE lenses.
6. Rotate the deflection Yoke and Centering Magnet on the RED CRT, so that the center horizontal line of the displaced RED crosshatch signal is converged on the GREEN signal to produce a yellow horizontal line.
7. Rotate the deflection Yoke and Centering Magnet on the BLUE CRT, so that the center horizontal line of the displaced BLUE crosshatch signal is converged on the GREEN signal to produce a white horizontal line.

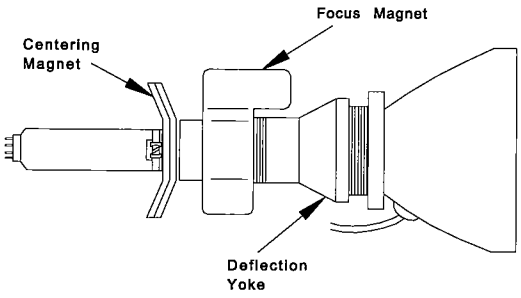

[Convergence Circuit] 14. Dynamic Convergence	**Adjustment purpose** To correct color misconvergence in RED, GREEN, and BLUE.
	Symptom when incorrectly adjusted Colors misconverged.

Measuring Instrument	-----
Test Point	-----
Exit Trigger	-----
Measurement Range	-----
Input Signal	VIDEO signal (Crosshatch)
Input Terminal	VIDEO IN terminal

Note: *This adjustment must follow item 13 (Static Convergence). Dynamic convergence should not be attempted until the static convergence has been properly adjusted. (including centering adjustment, if required). Cover the RED or BLUE lens with a lens cap, and adjust the color convergence in GREEN and RED or in GREEN and BLUE.*

1. Supply a VIDEO signal (crosshatch).
2. Press the "MENU" button on a remote hand unit.
3. Press the numerical buttons 2-3-5-9 in sequence to change the screen to the adjustment mode.
4. Adjust the convergence according to the steps described below:
   a. Press the "VIDEO" button to select a specific adjustment item.
   b. Press the "ADJUST UP/DOWN button to change adjustment data.
   c. Press "ENTER" to switch between RED and BLUE.

   Note: *The newly entered data is automatically recorded.*
5. Display a red raster and a blue raster. Confirm no black or bright horizontal line appears on the middle of the screen. If a line appears, set the data of the adjustment item "56 DA42" so that the line disappears.
6. Confirm no misconvergence occurs at the center of the screen.
   Use the following method to correct center screen misconvergence:
   a. When in the dynamic convergence adjustment mode, select the items shown in Table A to converge RED and BLUE at the center of the screen.
7. Press the "MENU" button twice to terminate the dynamic adjustment mode.

Adjustment Item		Description
No.	**Abbreviation**	
00	HSTA	Red Horizontal Position
01	VSTA	Red Vertical Position
30	HSTA	Blue Horizontal Position
31	VSTA	Blue Vertical Position

Table A

RED	BLUE	ITEM	ADJUSTMENT METHOD	PICTURE
2 TILT	32 TILT	Vertical Tilt	Merge horizontal center line with Green Line	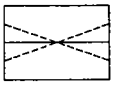
6 VWID	36 VWID	Vertical Height	Merge horizontal lines with GREEN lines	
7 VLIN	37 VLIN	Vertical Linearity	Merge horizontal lines with GREEN lines	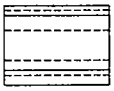
3 BOW	33 BOW	Vertical Bow	Merge horizontal center line with Green Line	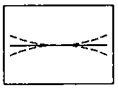
4 SKEW	34 SKEW	Skew	Merge vertical center line with Green Line	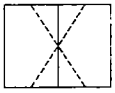
5 HBOW	35 HBOW	Horizontal Bow	Merge vertical center line with Green Line	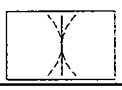
8 HWID	38 HWID	Horizontal Width	Merge vertical lines with Green Line	

RED	BLUE	ITEM	ADJUSTMENT METHOD	PICTURE
9 HLIN	39 HLIN	Horizontal Linearity	Merge Vertical lines with Green Line	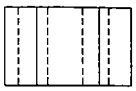
15 HKLU	45 HKLU	Horizontal Keystone	Merge upper left vertical line with GREEN line	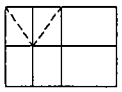
17 VLIN	47 HKLL	Horizontal Keystone	Merge lower left vertical line with GREEN line	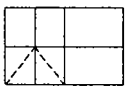
19 HKRL	49 HKRL	Horizontal Keystone	Merge lower right vertical line with GREEN Line	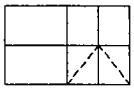
21 HKRU	51 HKRU	Horizontal Keystone	Merge upper right vertical line with GREEN Line	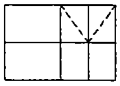
14 VKLU	44 VKLU	Vertical Keystone	Merge upper left horizontal line with GREEN Line	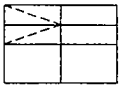
16 VKLL	46 VKLI	Vertical Keystone	Merge lower left horizontal line with GREEN Line	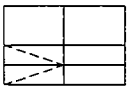
18 VKRI	48 VKRL	Vertical Keystone	Merge lower right horizontal line with GREEN Line	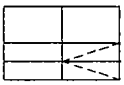
20 VKRU	50 VKRU	Vertical Keystone	Merge upper right horizontal line with GREEN Line	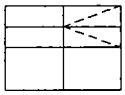
10 HSDL	40 HSDL	Left Horizontal Side	Merge left Vertical line with Green Line	
11 HSDR	41 HSDR	Right Horizontal Side	Merge right Vertical line with Green Line	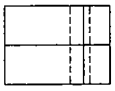
22 LHBW	52 LHBW	Horizontal Sloping Ends	Merge upper and lower left vertical line with GREEN Line	
23 RHBW	53 RHBW	Horizontal Sloping Ends	Merge upper and lower right vertical line with GREEN Line	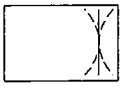
24 LVBW	53 LVBW	Vertical Sloping Ends	Merge upper and lower left horizontalal line with GREEN Line	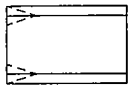
25 RVBW	55 RVBW	Vertical Sloping Ends	Merge upper and lower right horizontalal line with GREEN Line	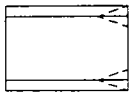
12 SLIN	12 SLIN	Horizontal Width at the Middle (1)	Merge Vertical lines with Green Line	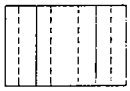
13 CLIN	39 HLIN	Horizontal linearity at the Middle (2)	Merge Vertical lines with Green Line	

[PIP Circuit] 15. PIP fsc	Adjustment purpose	Set the clock frequency of PIP.
	Symptom when incorrectly adjusted	Interference or no color in the sub picture.

Measuring Instrument	Frequency Counter
Test Point	TP61
Exit Trigger	-----
Measurement range	-----
Input Signal	
Input Terminal	

1. Supply a Video Color Bar signal input.
2. Select PIP window to display the Color Bar image.
3. Switch INPUT to External signal mode. Do not supply an input signal.
4. Press the numerical buttons 2-3-5-7 in sequence to change the screen to the circuit adjustment mode.
5. Set the adjustment function to "PIP " by pressing the "AUDIO" button.
6. Adjust item #44 FSC from 0 to 2.
7. Observe the frequency at TP61
8. Adjust VC7001 so that the frequency is 3.579545 MHz ± 50 Hz.
9. Set #44 FSC back to a value of 0.
10. Press "MENU" twice to terminate the circuit adjustment mode.

PCB-PIP/APT (COMPONENT SIDE)

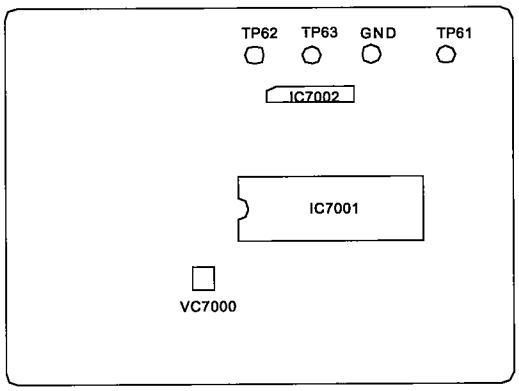

[PIP Circuit] 16. PIP Chroma Gain	Adjustment purpose	To set the color level between main and sub picture.
	Symptom when incorrectly adjusted	Different color level between main and sub picture.

Measuring Instrument	Oscilloscope
Test Point	TP63 (pin 5 of IC7001)
Exit Trigger	-----
Measurement range	Division 20mV Time 10µs
Input Signal	VIDEO signal (Color Bar)
Input Terminal	VIDEO IN terminal

Note: *Preheat the set for one minute or more.*

1. Supply a VIDEO signal (color bar).
2. Press the "MENU" button on a remote hand unit.
3. Press the numerical buttons 2-3-5-7 in sequence to change the screen to the circuit adjustment mode.
4. Set the adjustment function to "PIP " by pressing the "AUDIO" button.
5. Set all the items in adjustment function "PIP" to the initial data value (refer to page 21) using the "VIDEO and AUDIO" button.
6. Observe the waveform at TP63 (pin 5 of IC7001).
7. Select adjustment item "1 COLOR" using the "VIDEO" button.
8. Set the adjustment data so that the chroma signal amplitude of sub picture is 90 ± 5% of main picture using the "ADJUST" button (Fig.7).
9. Press the "ENTER" to write the adjustment data into memory.
10. Press the "MENU" button twice to terminate the circuit adjustment mode.

Note: *Adjustment item 17 (PIP Sub Tint) must be performed immediately after this adjustment.*

PCB-PIP/APT (COMPONENT SIDE)

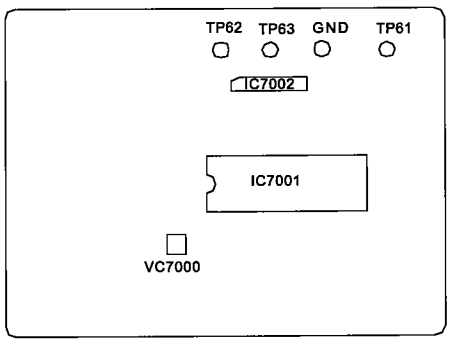

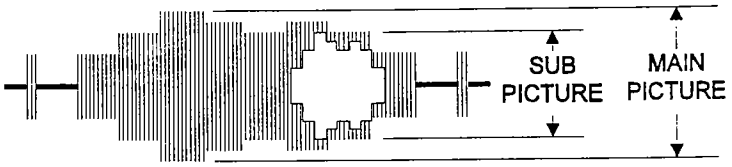

Fig. 7

[PIP Circuit]	**Adjustment purpose**	To obtain the same hue in the main and sub picture.
17. PIP Sub Tint	**Symptom when incorrectly adjusted**	Different hue between the main and sub picture, and color smear.

Measuring Instrument	-----
Test Point	-----
Exit Trigger	-----
Measurement range	-----
Input Signal	VIDEO signal (Color Bar)
Input Terminal	VIDEO IN terminal

Note: *Preheat the set for one minute or more.*
This adjustment must follow item 16 (PIP Chroma Gain)

1. Supply a VIDEO signal (color bar).
2. Activate PIP and display the same picture on main screen and sub picture screen.
3. Press the "MENU" button on a remote hand unit.
4. Press the numerical buttons 2-3-5-7 in sequence to change the screen to the circuit adjustment mode.
5. Set the adjustment function to "PIP " by pressing the "AUDIO" button.
6. Select adjustment item "2 TINT" using the "VIDEO" button.
7. Set the adjustment data so that the sub picture corresponds to the hue in the main picture using the "ADJUST" button.
8. Press the "ENTER" to write the adjustment data into memory.
9. Press the "MENU" button twice to terminate the circuit adjustment mode.

[PIP Circuit]	**Adjustment purpose**	To obtain the proper contrast ratio in the sub picture.
18. PIP Contrast	**Symptom when incorrectly adjusted**	Sub picture too light or too dark.

Measuring Instrument	Oscilloscope
Test Point	TP-62
Exit Trigger	
Measurement range	
Input Signal	VIDEO (Color Bars)
Input Terminal	VIDEO IN terminal

1. Apply Color Bar signal to External Input and select this image on both the Main and PIP pictures.
2. Using the PIP position button on a remote hand unit, adjust to place the PIP window as shown in figure 8 .
3. Connect Oscilloscope probe to TP-62 and observe the waveform.
4. Synchronize the waveform on the Oscilloscope as shown in figure 8.
5. Press the "MENU" button on a remote hand unit.
6. Press the numerical buttons 2-3-5-7 in sequence to enter the circuit adjustment mode.
7. Select the "PIP" function using the "AUDIO" button.
8. Adjust item "0 CONT" using the "ADJUST UP/DOWN" buttons to obtain the waveform ratio shown in figure 7 (Adjustment #16). PIP amplitude should be equal to 90 ± 5% of Main picture.
9. Press the "ENTER" button to write the adjustment data into memory.
10. Press the "MENU" button twice to terminate the circuit adjustment mode.

PCB-PIP/APT (COMPONENT SIDE)

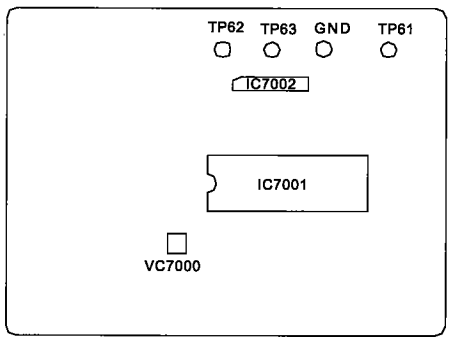

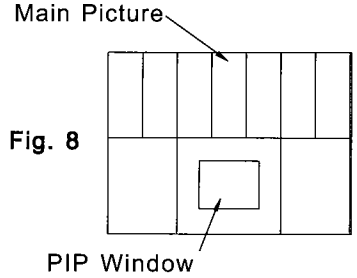

Fig. 8

CHIP PARTS REPLACEMENT

Some resistors, shorting jumpers (0 Ohm resistors), ceramic capacitors, transistors and diodes are chip parts. The following precautions should be taken when replacing these parts.

CAUTIONS:

1. Use a fine tipped, well insulated soldering iron (approximately 30 watts), and tweezers.
2. Melt the solder and remove the chip parts carefully so as not to tear the copper foil from the printed circuit board.
3. Discard removed chips; do not reuse them.
4. Do not apply heat for more than 3 (three)seconds to new chip parts.
5. Avoid using a rubbing stroke when soldering.
6. Take care not to scratch, or damage the chip parts when soldering.
7. Supplementary cementing is not required

1. Removal of Chip Parts (Resistors, Capacitors, etc)

A. Grasp the part with tweezers. Melt the solder at both sides alternately and remove one side of the part with a twisting motion.
B. Melt the solder at the other side and remove the part.

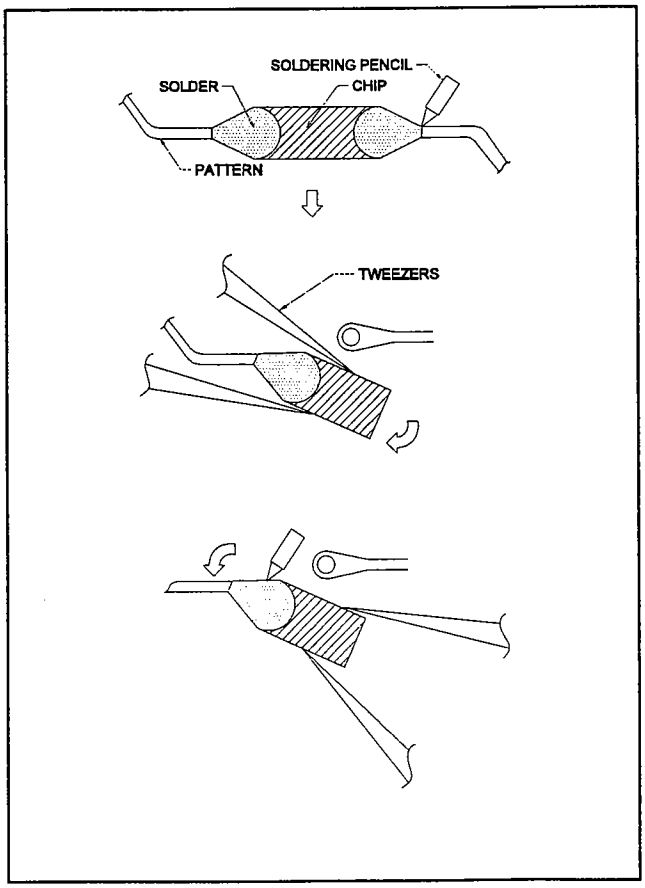

2. Removal of Chip Parts (Transistors)

A. Melt the solder of one lead and lift the side of that lead upward.
B. Simultaneously melt the solder of the other two leads and lift the part from the PCB.

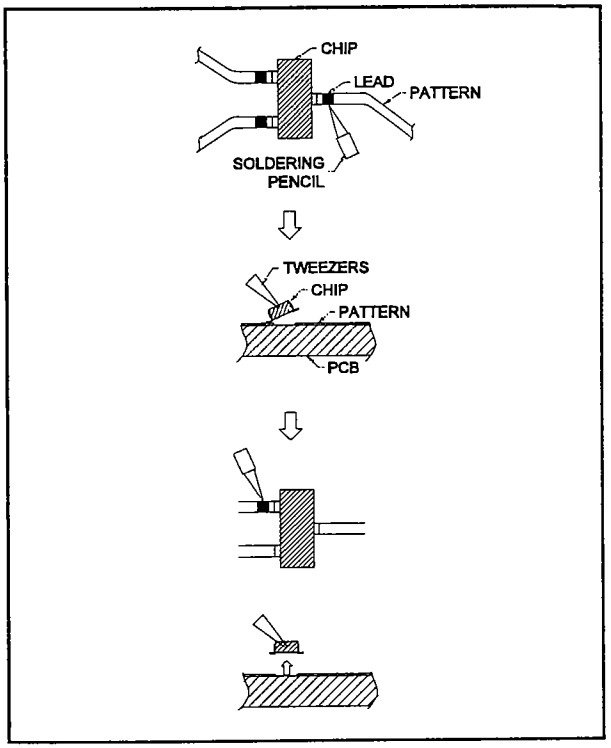

3. Replacement

A. Presolder the contact points on the circuit pattern.
B. Press the part downward with tweezers and apply the soldering iron as shown

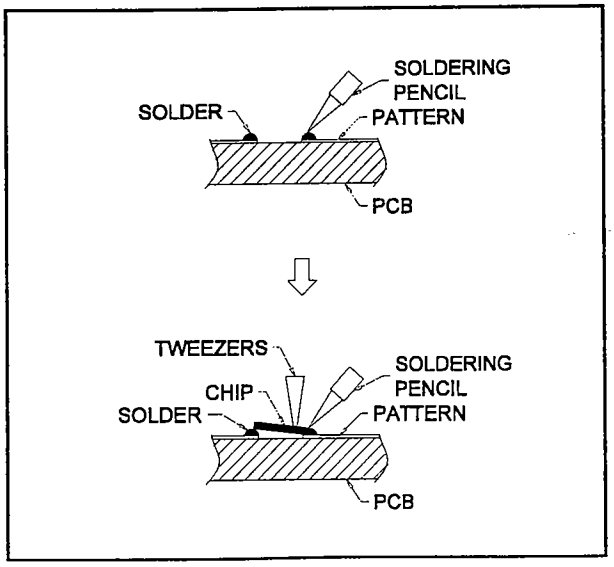

2. Electrical Parts and Others

A. Model : VS-45501/VS-45502/VS-45501A/VS-50501/VS-50502/VS-50501A

In order to expedite delivery of replacement parts orders, specify the following:
1. Model Number/Serial Number
2. Part Number and description
3. Quantity

Note: Unless complete information is supplied, delay in processing of orders will result.

B. Symbol

The electrical parts with shading are critical components, and the parts with * are warranty return items.

: Critical Components

* : Warranty Items

MARK	B	C	D	F	G	J	K
Tolerance %	±0.1	±0.25	±0.5	±1	±2	±5	±10

MARK	M	N	V	X	Z	P	Q
Tolerance %	±20	±30	+10 -10	+40 - 20	+80 - 20	+100 - 0	+30 -10

MARK	B	C	D	F	G
Tolerance (ρF)	±0.1	±0.25	±0.5	±1	±2

C. Abbreviation

[45501]	VS-45501
[45502]	VS-45502
[45501A]	VS-45501A
[50501]	VS-50501
[50502]	VS-50502
[50501A]	VS-50501A

SYMBOL NO.	PARTS NO.	PARTS NAME	DESCRIPTION	
	TUBES			
*	251C083O10	ASSY-CRT	RED-MONOCHROME	50501
				50502
*	251C083O20	ASSY-CRT	GREEN-MONOCHROME	50501
				50502
*	251C083O30	ASSY-CRT	BLUE-MONOCHROME	50501
				50502
*	251C091O10	ASSY-CRT	RED-MONOCHROME	50501A
*	251C091O20	ASSY-CRT	GREEN-MONOCHROME	50501A
*	251C091O30	ASSY-CRT	BLUE-MONOCHROME	50501A
*	251C083O40	ASSY-CRT	RED-MONOCHROME	45501
				45502
*	251C083O50	ASSY-CRT	GREEN-MONOCHROME	45501
				45502
*	251C083O60	ASSY-CRT	BLUE-MONOCHROME	45501
				45502
*	251C091O40	ASSY-CRT	RED-MONOCHROME	45501A
*	251C091O50	ASSY-CRT	GREEN-MONOCHROME	45501A
*	251C091O60	ASSY-CRT	BLUE-MONOCHROME	45501A
	INTEGRATED CIRCUITS			
IC200	270P347O30	IC	CXA2095S	
IC2001	274P596O20	IC	T90A13N	
IC2002	272P658O10	IC	MM1031XS	
IC203	270P210O10	IC	AN7809F	
IC204	270P204O10	IC	PA0057A	
IC3A1	272P440O10	IC	LA4282	
IC3E1	270P467O10	IC	TDA9855	
IC401	270P064O20	IC	LA7845	
IC5A00	272P106O30	IC	UPC4570HA	
IC5A01	266P154O10	IC	UPC393C	
IC700	274P762O90	IC-MOS	M37270EFSP	
IC7001	275P039O20	IC	M65617SP-A	
IC7002	272P761O10	IC	MM1041XS	
IC7003	272P658O10	IC	MM1031XS	
IC7004	270P465O10	IC	NJM317	
IC701	274P333O10	IC-MOS	24C04A*P	
IC702	266P130O30	IC	PST520E	
IC703	275P040O90	IC	M38123E6SP	
IC705	263P265O10	IC	HD74HC32P	
IC706	274P333O10	IC-MOS	24C04A*P	
IC7601	270P321O20	IC	CXA1855S	
IC8C00	266P154O10	IC	UPC393C	
IC8D00	270P202O10	IC	CM0001AS	
IC8E00	270P202O10	IC	CM0001AS	
IC8F00	272P106O20	IC	UPC4574C	
IC8G00	270P357O10	IC	PM0002B	
IC8W00	267P077O20	HIC	STK391-020	
IC8W01	267P077O20	HIC	STK391-020	
IC8W02	267P077O20	HIC	STK391-020	
IC800	270P203O20	IC	M52336ASP	
IC870	274P713O10	IC-MOS	CD0006BD	
IC9A00	270P466O20	IC	KIA7809PI	
IC9A01	270P466O10	IC	KIA7805PI	
IC9A02	270P466O30	IC	KIA7812PI	
IC9A12	270P466O10	IC	KIA7805PI	
IC900	267P129O10	HIC	STR-M6811	
IC901	267P126O10	HIC	SE130N	
IC902	272P240O10	IC	M5237L	

SYMBOL NO.	PARTS NO.	PARTS NAME	DESCRIPTION
IC903	266P932O10	IC	AN7805
	TRANSISTORS		
Q 100	260P560O40	TRANSISTOR	2SA933S-S
Q 101	260P560O40	TRANSISTOR	2SA933S-S
Q 102	260P560O40	TRANSISTOR	2SA933S-S
Q 103	260P559O30	TRANSISTOR	2SC1740S-S
Q 104	260P560O40	TRANSISTOR	2SA933S-S
Q 105	260P560O40	TRANSISTOR	2SA933S-S
Q 106	260P560O40	TRANSISTOR	2SA933S-S
Q 107	260P559O30	TRANSISTOR	2SC1740S-S
Q 109	260P559O30	TRANSISTOR	2SC1740S-S
Q 110	260P559O30	TRANSISTOR	2SC1740S-S
Q 2H04	260P559O30	TRANSISTOR	2SC1740S-S
Q 2H05	260P559O30	TRANSISTOR	2SC1740S-S
Q 2H06	260P559O30	TRANSISTOR	2SC1740S-S
Q 2H07	260P559O30	TRANSISTOR	2SC1740S-S
Q 2H08	260P559O30	TRANSISTOR	2SC1740S-S
Q 2H09	260P559O30	TRANSISTOR	2SC1740S-S
Q 2H10	260P560O40	TRANSISTOR	2SA933S-S
Q 2H11	260P560O40	TRANSISTOR	2SA933S-S
Q 2H12	260P560O40	TRANSISTOR	2SA933S-S
Q 2K0	260P559O30	TRANSISTOR	2SC1740S-S
Q 2030	260P559O50	TRANSISTOR	2SC1740S-E
Q 2040	260P559O50	TRANSISTOR	2SC1740S-E
Q 2050	260P559O50	TRANSISTOR	2SC1740S-E
Q 2051	260P559O50	TRANSISTOR	2SC1740S-E
Q 2052	260P559O50	TRANSISTOR	2SC1740S-E
Q 206	260P559O30	TRANSISTOR	2SC1740S-S
Q 208	260P559O30	TRANSISTOR	2SC1740S-S
Q 209	260P559O30	TRANSISTOR	2SC1740S-S
Q 210	260P560O40	TRANSISTOR	2SA933S-S
Q 211	260P559O30	TRANSISTOR	2SC1740S-S
Q 212	260P559O30	TRANSISTOR	2SC1740S-S
Q 213	260P559O30	TRANSISTOR	2SC1740S-S
Q 214	260P559O30	TRANSISTOR	2SC1740S-S
Q 215	260P559O30	TRANSISTOR	2SC1740S-S
Q 216	260P560O40	TRANSISTOR	2SA933S-S
Q 217	260P559O30	TRANSISTOR	2SC1740S-S
Q 220	260P385O20	TRANSISTOR	2SC2229-Y
Q 221	260P385O20	TRANSISTOR	2SC2229-Y
Q 222	260P385O20	TRANSISTOR	2SC2229-Y
Q 224	260P560O40	TRANSISTOR	2SA933S-S
Q 225	260P559O30	TRANSISTOR	2SC1740S-S
Q 3A1	260P559O30	TRANSISTOR	2SC1740S-S
Q 3A2	260P559O30	TRANSISTOR	2SC1740S-S
Q 3A3	260P559O30	TRANSISTOR	2SC1740S-S
Q 3A4	260P560O40	TRANSISTOR	2SA933S-S
Q 3E01	260P559O30	TRANSISTOR	2SC1740S-S
Q 3E02	260P603O10	TRANSISTOR	UN4112 /2
Q 3E03	260P632O10	TRANSISTOR	DTC124ES
Q 3E04	260P559O30	TRANSISTOR	2SC1740S-S
Q 5A00	260P797O20	TRANSISTOR	2SD2349
Q 5A01	260P422O10	TRANSISTOR	2SC2482
Q 5A02	260P797O20	TRANSISTOR	2SD2349
Q 5A03	260P559O50	TRANSISTOR	2SC1740S-E
Q 5A04	260P559O50	TRANSISTOR	2SC1740S-E
Q 5A05	260P559O30	TRANSISTOR	2SC1740S-S
Q 5A06	260P560O40	TRANSISTOR	2SA933S-S
Q 5A07	260P422O10	TRANSISTOR	2SC2482

SYMBOL NO.	PARTS NO.	PARTS NAME	DESCRIPTION
Q 5A08	260P420O20	TRANSISTOR	2SC2073-B,C
Q 5H03	260P559O50	TRANSISTOR	2SC1740S-E
Q 5H04	260P559O50	TRANSISTOR	2SC1740S-E
Q 5H05	260P559O50	TRANSISTOR	2SC1740S-E
Q 5H06	260P559O50	TRANSISTOR	2SC1740S-E
Q 5H07	260P559O50	TRANSISTOR	2SC1740S-E
Q 5H08	260P559O50	TRANSISTOR	2SC1740S-E
Q 5H09	260P559O50	TRANSISTOR	2SC1740S-E
Q 5H10	260P560O40	TRANSISTOR	2SA933S-S
Q 5H11	260P573O20	TRANSISTOR	2SB940A-P
Q 5H12	260P574O20	TRANSISTOR	2SD1264A-P
Q 5H13	260P559O50	TRANSISTOR	2SC1740S-E
Q 5H14	260P559O30	TRANSISTOR	2SC1740S-S
Q 5K00	260P664O30	TRANSISTOR	2SC4636
Q 5K01	260P664O30	TRANSISTOR	2SC4636
Q 5K02	260P559O50	TRANSISTOR	2SC1740S-E
Q 5K03	260P560O40	TRANSISTOR	2SA933S-S
Q 5K04	260P559O50	TRANSISTOR	2SC1740S-E
Q 6B0	261P004O10	TRANSISTOR	2SC3271F-N,P
Q 6B1	260P469O30	TRANSISTOR	2SA1321
Q 6B2	260P307O20	TRANSISTOR	2SC3334
Q 6G0	261P004O10	TRANSISTOR	2SC3271F-N,P
Q 6G1	260P469O30	TRANSISTOR	2SA1321
Q 6G2	260P307O20	TRANSISTOR	2SC3334
Q 6G5	260P560O40	TRANSISTOR	2SA933S-S
Q 6R0	261P004O10	TRANSISTOR	2SC3271F-N,P
Q 6R1	260P469O30	TRANSISTOR	2SA1321
Q 6R2	260P307O20	TRANSISTOR	2SC3334
Q 7A00	260P559O30	TRANSISTOR	2SC1740S-S
Q 7A01	260P560O40	TRANSISTOR	2SA933S-S
Q 7C00	260P559O30	TRANSISTOR	2SC1740S-S
Q 7C10	260P559O30	TRANSISTOR	2SC1740S-S
Q 7000	260P559O30	TRANSISTOR	2SC1740S-S
Q 7006	260P559O30	TRANSISTOR	2SC1740S-S
Q 7007	260P559O30	TRANSISTOR	2SC1740S-S
Q 7008	260P559O30	TRANSISTOR	2SC1740S-S
Q 701	260P559O30	TRANSISTOR	2SC1740S-S
Q 7011	260P559O30	TRANSISTOR	2SC1740S-S
Q 7013	260P559O30	TRANSISTOR	2SC1740S-S
Q 7014	260P559O30	TRANSISTOR	2SC1740S-S
Q 7016	260P559O30	TRANSISTOR	2SC1740S-S
Q 7017	260P560O40	TRANSISTOR	2SA933S-S
Q 7018	260P560O40	TRANSISTOR	2SA933S-S
Q 7019	260P559O30	TRANSISTOR	2SC1740S-S
Q 703	260P560O40	TRANSISTOR	2SA933S-S
Q 704	260P559O30	TRANSISTOR	2SC1740S-S
Q 705	260P560O40	TRANSISTOR	2SA933S-S
Q 706	260P559O30	TRANSISTOR	2SC1740S-S
Q 708	260P559O30	TRANSISTOR	2SC1740S-S
Q 709	260P560O40	TRANSISTOR	2SA933S-S
Q 710	260P560O40	TRANSISTOR	2SA933S-S
Q 711	260P560O40	TRANSISTOR	2SA933S-S
Q 712	260P559O30	TRANSISTOR	2SC1740S-S
Q 713	260P560O40	TRANSISTOR	2SA933S-S
Q 714	260P559O30	TRANSISTOR	2SC1740S-S
Q 7601	260P559O30	TRANSISTOR	2SC1740S-S
Q 7602	260P559O30	TRANSISTOR	2SC1740S-S
Q 7603	260P560O40	TRANSISTOR	2SA933S-S
Q 7670	260P559O30	TRANSISTOR	2SC1740S-S
Q 7671	260P559O30	TRANSISTOR	2SC1740S-S
Q 8F00	260P559O30	TRANSISTOR	2SC1740S-S
Q 800	260P559O30	TRANSISTOR	2SC1740S-S
Q 9A00	260P646O10	TRANSISTOR	2SC1845-F,E
Q 900	260P559O50	TRANSISTOR	2SC1740S-E
Q 904	260P652O10	TRANSISTOR	2SA1725
		DIODES	
D 100	264P502O10	DIODE	HZ5ALL
D 101	264P502O10	DIODE	HZ5ALL
D 102	264P488O20	DIODE	RD13FB1
D 104	264P470O40	DIODE	RD33EB1/2
D 2H00	264P045O40	DIODE	1S2471OM
D 210	264P486O50	DIODE	RD9.1FB2
D 211	264P045O40	DIODE	1S2471OM
D 216	264P483O70	DIODE	RD5.1FB1
D 217	264P502O20	DIODE	HZ5BLL
D 218	264P045O40	DIODE	1S2471OM
D 219	264P045O40	DIODE	1S2471OM
D 220	264P483O80	DIODE	RD5.1FB2
D 221	264P045O40	DIODE	1S2471OM
D 222	264P045O40	DIODE	1S2471OM
D 223	264P045O40	DIODE	1S2471OM
D 224	264P045O40	DIODE	1S2471OM
D 225	264P045O40	DIODE	1S2471OM
D 226	264P501O50	DIODE	HZ3BLL
D 227	264P502O30	DIODE	HZ5CLL
D 228	264P045O40	DIODE	1S2471OM
D 229	264P045O40	DIODE	1S2471OM
D 230	264P045O40	DIODE	1S2471OM
D 3A3	264P501O40	DIODE	HZ3ALL
D 3A4	264P045O40	DIODE	1S2471OM
D 3A5	264P045O40	DIODE	1S2471OM
D 3A6	264P045O40	DIODE	1S2471OM
D 3A7	264P045O40	DIODE	1S2471OM
D 3E00	264P045O40	DIODE	1S2471OM
D 401	264D056O20	DIODE	ERB12-02RK/3
D 402	264D056O20	DIODE	ERB12-02RK/3
D 403	264D056O20	DIODE	ERB12-02RK/3
D 5A00	264P045O40	DIODE	1S2471OM
D 5A02	264P045O40	DIODE	1S2471OM
D 5A03	264P045O40	DIODE	1S2471OM
D 5A04	264P045O40	DIODE	1S2471OM
D 5A06	264P045O40	DIODE	1S2471OM
D 5A07	264P045O40	DIODE	1S2471OM
D 5A09	264P244O30	DIODE	HZT22-02
D 5A11	264P045O40	DIODE	1S2471OM
D 5A20	264P469O70	DIODE	RD27EB4/2
D 5A21	264P045O40	DIODE	1S2471OM
D 5A22	264P045O40	DIODE	1S2471OM
D 5A23	264P045O40	DIODE	1S2471OM
D 5H00	264P045O40	DIODE	1S2471OM
D 5H01	264P045O40	DIODE	1S2471OM
D 5H02	264P045O40	DIODE	1S2471OM
D 5H03	264D056O20	DIODE	ERB12-02RK/3
D 5H04	264D056O20	DIODE	ERB12-02RK/3
D 5H09	264P045O40	DIODE	1S2471OM
D 5K01	264P528O30	DIODE	RP 1H
D 5K02	264P543O10	DIODE	EG01
D 5K03	264P543O10	DIODE	EG01
D 5K10	264P528O30	DIODE	RP 1H

SYMBOL NO.	PARTS NO.	PARTS NAME	DESCRIPTION
D 6B0	264P045O40	DIODE	1S2471OM
D 6B3	264P045O40	DIODE	1S2471OM
D 6G0	264P045O40	DIODE	1S2471OM
D 6G3	264P045O40	DIODE	1S2471OM
D 6R0	264P045O40	DIODE	1S2471OM
D 6R3	264P045O40	DIODE	1S2471OM
D 600	264P457O80	DIODE	RD3.3EB1
D 7A00	264P212O20	LED	LN31GPH
D 7001	264P045O40	DIODE	1S2471OM
D 7002	264P045O40	DIODE	1S2471OM
D 701	264P486O20	DIODE	RD8.2FB3
D 702	264P483O70	DIODE	RD5.1FB1
D 703	264P483O70	DIODE	RD5.1FB1
D 704	264P483O70	DIODE	RD5.1FB1
D 706	264P483O70	DIODE	RD5.1FB1
D 707	264P483O70	DIODE	RD5.1FB1
D 708	264P483O70	DIODE	RD5.1FB1
D 709	264P483O70	DIODE	RD5.1FB1
D 715	264P045O40	DIODE	1S2471OM
D 716	264P045O40	DIODE	1S2471OM
D 717	264P045O40	DIODE	1S2471OM
D 718	264P483O70	DIODE	RD5.1FB1
D 719	264D056O20	DIODE	ERB12-02RK/3
D 720	264P483O70	DIODE	RD5.1FB1
D 721	264P483O70	DIODE	RD5.1FB1
D 722	264P483O70	DIODE	RD5.1FB1
D 723	264P483O70	DIODE	RD5.1FB1
D 724	264P483O70	DIODE	RD5.1FB1
D 725	264P483O70	DIODE	RD5.1FB1
D 727	264P483O70	DIODE	RD5.1FB1
D 728	264P045O40	DIODE	1S2471OM
D 729	264D056O20	DIODE	ERB12-02RK/3
D 730	264P045O40	DIODE	1S2471OM
D 731	264P045O40	DIODE	1S2471OM
D 7601	264P485O60	DIODE	RD7.5FB2
D 7602	264P485O60	DIODE	RD7.5FB2
D 7603	264P485O60	DIODE	RD7.5FB2
D 7604	264P486O60	DIODE	RD9.1FB3
D 7605	264P486O60	DIODE	RD9.1FB3
D 7606	264P045O40	DIODE	1S2471OM
D 7607	264P045O40	DIODE	1S2471OM
D 7608	264P486O60	DIODE	RD9.1FB3
D 7609	264P486O60	DIODE	RD9.1FB3
D 8C01	264P045O40	DIODE	1S2471OM
D 8C02	264P425O10	DIODE	ISS88
D 800	264P483O80	DIODE	RD5.1FB2
D 9A00	264P718O20	DIODE	FR156
D 9A01	264P720O10	DIODE	KBP202G
D 9A02	264P470O80	DIODE	EQA02-32C/2
D 9A03	264P045O40	DIODE	1S2471OM
D 9A04	264P045O40	DIODE	1S2471OM
D 9A05	264P045O40	DIODE	1S2471OM
D 9A06	264P825O10	DIODE	ERA15-02
D 900	264P721O10	DIODE	TS6B06G
D 901	264P487O80	DIODE	RD12FB2
D 903	264P522O10	DIODE	RU 1P
D 904	264P724O10	DIODE	STF14
D 906	264P578O10	DIODE	RG 2A
D 907	264P588O10	DIODE	FML-G16S
D 908	264P722O10	DIODE	SF64
D 909	264P719O10	DIODE	FR302
D 910	264P722O10	DIODE	SF64
D 912	264P724O10	DIODE	STF14
D 913	264P722O10	DIODE	SF64
D 914	264P718O10	DIODE	FR155
	FILTERS		
CF200	299P128O10	CERAMIC-OSC	CSB500F2
	DELAY LINES		
DL201	337P134O10	DELAY-LINE	SDL-4256
DL5H01	337P147O20	DELAY-LINE	
DL5H02	337P147O20	DELAY-LINE	
	COILS		
	330P209O40	DEFLECTION YOKE	VZ4-7-90
	338P046O10	CPM-ASSY	DBV4001M
L 100	325C111O30	COIL-PEAKING	10MH-K
L 101	325C111O30	COIL-PEAKING	10MH-K
L 102	325C111O30	COIL-PEAKING	10MH-K
L 103	325C111O30	COIL-PEAKING	10MH-K
L 104	325C111O30	COIL-PEAKING	10MH-K
L 105	325C168O70	COIL-PEAKING	1000MH-J
L 106	325C111O30	COIL-PEAKING	10MH-K
L 107	325C111O30	COIL-PEAKING	10MH-K
L 108	325C111O30	COIL-PEAKING	10MH-K
L 109	325C121O30	COIL-PEAKING	10MH-K
L 110	325C111O30	COIL-PEAKING	10MH-K
L 111	325C168O70	COIL-PEAKING	1000MH-J
L 112	325C111O30	COIL-PEAKING	10MH-K
L 201	325C121O30	COIL-PEAKING	10MH-K
L 2010	325C121O30	COIL-PEAKING	10MH-K
L 2011	325C121O30	COIL-PEAKING	10MH-K
L 2012	325C121O30	COIL-PEAKING	10MH-K
L 2031	325C121O80	COIL-PEAKING	27MH-K
L 2040	325C121O80	COIL-PEAKING	27MH-K
L 2050	325C121O80	COIL-PEAKING	27MH-K
L 2069	325C121O30	COIL-PEAKING	10MH-K
L 211	325C122O50	COIL-PEAKING	100MH-K
L 212	325C121O30	COIL-PEAKING	10MH-K
L 214	325C166O70	COIL-PEAKING	22MH-J
L 215	325C121O90	COIL-PEAKING	33MH-K
L 3F01	325C111O30	COIL-PEAKING	10MH-K
L 401	321C130O10	COIL-RF	2.0MH +-15%
L 411	325C401O30	COIL-PEAKING	10MH-J
L 412	411P001O10	LEAD-FERRITE	
L 5A00	351P156O20	COIL-CHOKE	YT-4361-1 2.4
L 5A01	351P156O10	COIL-CHOKE	YT-4360-1 3.1
L 5A02	333P040O60	COIL-HORIZ-LINEARITY	
L 5A03	411P001O10	LEAD-FERRITE	
L 5A04	411P001O10	LEAD-FERRITE	
L 5A05	321C030O70	COIL-RF	3.3MH-K
L 5A06	411P001O10	LEAD-FERRITE	
L 5H00	411D009O20	CORE-FERRITE	
L 5K00	411P001O40	LEAD-FERRITE	
L 6B0	325C402O20	COIL-PEAKING	56MH-J
L 6B1	325C402O20	COIL-PEAKING	56MH-J
L 6G0	325C402O20	COIL-PEAKING	56MH-J
L 6G1	325C402O20	COIL-PEAKING	56MH-J

SYMBOL NO.	PARTS NO.	PARTS NAME	DESCRIPTION
L 6R0	325C402O20	COIL-PEAKING	56MH-J
L 6R1	325C402O20	COIL-PEAKING	56MH-J
L 7000	325C110O50	COIL-PEAKING	2.2MH-K
L 7001	325C110O30	COIL-PEAKING	1.5MH-K
L 7002	325C121O30	COIL-PEAKING	10MH-K
L 7003	325C121O30	COIL-PEAKING	10MH-K
L 7004	325C121O30	COIL-PEAKING	10MH-K
L 7006	325C121O30	COIL-PEAKING	10MH-K
L 7007	325C121O30	COIL-PEAKING	10MH-K
L 7008	325C121O30	COIL-PEAKING	10MH-K
L 701	325C121O30	COIL-PEAKING	10MH-K
L 702	325C121O30	COIL-PEAKING	10MH-K
L 703	325C121O30	COIL-PEAKING	10MH-K
L 704	325C121O30	COIL-PEAKING	10MH-K
L 705	325C121O30	COIL-PEAKING	10MH-K
L 706	325C121O30	COIL-PEAKING	10MH-K
L 707	325C165O70	COIL-PEAKING	3.3MH-J
L 708	325C401O00	COIL-PEAKING	5.6MH-J
L 709	325C121O30	COIL-PEAKING	10MH-K
L 710	325C165O70	COIL-PEAKING	3.3MH-J
L 711	325C166O30	COIL-PEAKING	10MH-J
L 714	321C114O70	COIL-RF	6800MH-J
L 715	325C121O30	COIL-PEAKING	10MH-K
L 716	325C121O30	COIL-PEAKING	10MH-K
L 7601	325C166O30	COIL-PEAKING	10MH-J
L 7602	325C166O30	COIL-PEAKING	10MH-J
L 77A1	325C121O30	COIL-PEAKING	10MH-K
L 8D01	321C031O40	COIL-RF	10MH-K
L 8E01	321C031O40	COIL-RF	10MH-K
L 8F01	321C031O40	COIL-RF	10MH-K
L 8F02	321C031O40	COIL-RF	10MH-K
L 8W01	321C031O40	COIL-RF	10MH-K
L 8W02	321C031O40	COIL-RF	10MH-K
L 8W03	321C031O40	COIL-RF	10MH-K
L 8W04	321C031O40	COIL-RF	10MH-K
L 8W05	321C031O40	COIL-RF	10MH-K
L 8W06	321C031O40	COIL-RF	10MH-K
L 800	321C031O40	COIL-RF	10MH-K
L 802	321C031O40	COIL-RF	10MH-K
L 803	321C031O40	COIL-RF	10MH-K
L 900	351P139O10	LINE-FILTER	SS35V-30082
L 902	351P155O10	COIL	YT-4388-1
L 903	351P155O10	COIL	YT-4388-1
L 904	351P155O10	COIL	YT-4388-1
L 905	351P155O10	COIL	YT-4388-1
L 907	321C142O30	COIL-RF	68MH-K 9X9.5
L 908	321C142O30	COIL-RF	68MH-K 9X9.5
L 909	411P001O10	LEAD-FERRITE	
L 910	411P001O10	LEAD-FERRITE	
L 911	411P001O10	LEAD-FERRITE	
L 912	411P001O60	LEAD-FERRITE	
L 913	411D009O20	CORE-FERRITE	
L 914	411D009O20	CORE-FERRITE	
L 925	411D009O20	CORE-FERRITE	
LC2091	409P402O30	EMI-FILTER	FZ103N100
LC2092	409P402O30	EMI-FILTER	FZ103N100
LC701	409P402O10	EMI-FILTER	B101M100
LC702	409P402O10	EMI-FILTER	B101M100
LC703	409P402O10	EMI-FILTER	B101M100
LC704	409P402O10	EMI-FILTER	B101M100

SYMBOL NO.	PARTS NO.	PARTS NAME	DESCRIPTION
T 5A01	336P031O10	COIL-HORIZ-DRIVE	
T 5A02	336P031O10	COIL-HORIZ-DRIVE	
	TRANSFORMERS		
T 5A00	349P122O80	TRANS-SIDE-PCC	
T 5A03	334P246O60	TRANS-FLYBACK	
T 9A00	350P704O10	TRANS-POWER	PEY48-25
T 900	350P703O10	TRANS-POWER	EE-42
T 901	350P405050	TRANS-POWER	
	VARIABLE RESISTORS		
RV900	265P100O10	VARISTOR	ERZV10D271 /2
	129P059O30	VR-FOCUS	MHF116-50
	RESISTORS		
R 106	103P331080	R-C	1/4W 270OHM -J
R 3B8	103P378O40	R-FUSE	1/4W 2.2 OHM -J
R 3B9	103P378O40	R-FUSE	1/4W 2.2 OHM -J
R5A-01	103C190O10	R-M	3W 10 OHM - J
R5A02	103P712O51	R-C	1/4W 1K
R5A03	103P712O81	R-C	1/4W 1.8K-J
R5A04	103C190O90	R-M	3W 47 OHM - J
R5A05	103C190O70	R-M	3W 33 OHM - J
R5A07	103P712PO51	R-C	1/4W 1K - J
R5A08	103P714O41	R-C	1/4W 39K - J
R5A09	103P712O51	R-C	1/4W 1K - J
R 5A10	109D074O20	R-CE-M	5W 6.8K-K/J
R5A11	10P463O31	R-M	1/4W 2.2K - F
R5A13	103P712O71	R-C	1/4W 1.5K - J
R5A17	103P713O51	R-C	1/4W 6.8K - J
R5A18	103P713O61	R-C	1/4W 8.2K - J
R5A19	103P713O71	R-C	1/4W 10K - J
R5A28	103P463O41	R-M	1/4W 2.4K - F
R5A29	103P460O91	R-M	1/4W 22O OHM - F
R5A30	103P463O81	R-M	1/4W 3.6K - F
R5A40	101P101E31	R-COMP	1/4W 100 OHM - K
R5A45	103C391O50	R-M-P	3W 150 OHM - J
R 5A47	109D074O20	R-CE-M	5W 6.8K-K/J
R 5A50	103P438O40	R-FUSE-M	2W 2.2 OHM-K/J
R5A60	103P463O21	R-M	1/4W 2K - F
R5A71	103P714O41	R-M	1/4W 39K - J
R5A75	103P465O31	R-M	1/4W 15K - F
R5A76	103P464O91	R-M	1/4W 10K - F
R5A81	103P463O61	R-M	1/4W 3K - F
R5A82	103P463O41	R-M	1/4W 2.4K - F
R 5H02	103P378O00	R-FUSE	1/4W 1.0 OHM -J
R 5K09	103P392O20	R-FUSE	1/2W 560 OHM -J
R 5K12	103P390O60	R-FUSE	1/2W 27 OHM -J
R 5K34	103P390O60	R-FUSE	1/2W 27 OHM -J
R 901	109D077O80	R-CE-W	15W 0.56-K
R 902	109D077O80	R-CE-W	15W 0.56-K
R 909	102P107O30	R-WIRE	2W 0.27-K
R 910	102P106O80	R-WIRE	2W 0.1-J
R 918	109D094O30	R-CE-M	7W 22K-K
R 922	103P398O90	R-FUSE	1/2W 5.6 OHM -J

MODEL: VS-45501/VS-45502/VS-45501A/VS-50501/VS-50502/VS-50501A

SYMBOL NO.	PARTS NO.	PARTS NAME	DESCRIPTION	
R 927	109D036030	R-COMP	1/2W	1.0M-K
R 928	109D036030	R-COMP	1/2W	1.0M-K
R 931	109D021O70	R-SOLID	1/2W	1.5M-K
		CAPACITORS AND TRIMMERS		
C 408	189P071O50	C-M-PP	200V	0.33MF-J
C 5A04	172P172O70	C-M-PP	1600V	4300PF-J
C5A00	172P081O80	C-P-PP	200V	0.033MF-K
C 5A05	172P172O70	C-M-PP	1600V	4300PF-J
C5A12	172P330O71	C-P	50V	3300PF-J
C 5A13	172P170O90	C-M-PP	1600V	4700PF-J
C 5A14	172P170O90	C-M-PP	1600V	4700PF-J
C 5A16	189P081O60	C-M-PP	200V	0.15MF-J
C 5A17	189P081O60	C-M-PP	200V	0.15MF-J
C 5A27	189P071O80	C-M-PP	200V	0.47MF-J
C5A32	72P262O51	C-M-P	50V	0.1MF-J
C 5A35	154P264060	C-C	3.15KV	470P-K
C 5K00	172P171O60	C-M-PP	1600V	0.018MF-J
C 5K01	172P171O60	C-M-PP	1600V	0.018MF-J
C 900	189P153O40	C-M-P-AC	AC250V	0.1MF-M
C 901	189P067O60	C-C-AC	B VA1	1000PF-M
C 902	189P067O60	C-C-AC	B VA1	1000PF-M
C 903	189P134O80	C-C-AC	F VA1	2200PF-M
C 904	189P134O80	C-C-AC	F VA1	2200PF-M
C 905	189P134O80	C-C-AC	F VA1	2200PF-M
C 906	189P134O80	C-C-AC	F VA1	2200PF-M
C 907	185D063O30	C-ELE	H180V	820MF-M 105C
C 908	185D063O30	C-ELE	H180V	820MF-M 105C
C 917	185D063O20	C-ELE	H180V	470MF-M 105C
C 920	185D062O50	C-ELE	H50V	4700MF-M
C 928	185D062O50	C-ELE	H50V	4700MF-M
C 931	189P153O40	C-M-P-AC	AC250V	0.1MF-M
C 938	189P152O50	C-M-P-AC	AC125V	4700PF-M
C 944	189P152O50	C-M-P-AC	AC125V	4700PF-M
C 952	189P134O80	C-C-AC	F VA1	2200PF-M
C 953	189P134O80	C-C-AC	F VA1	2200PF-M
VC7000	202P109O10	C-TRIMMER		3PF-10PF
		SWITCHES		
S 7A00	432P100O10	SW-KEY-BOARD		1-1 H=4.3
S 7A01	432P100O10	SW-KEY-BOARD		1-1 H=4.3
S 7A02	432P100O10	SW-KEY-BOARD		1-1 H=4.3
S 7A03	432P100O10	SW-KEY-BOARD		1-1 H=4.3
S 7A04	432P100O10	SW-KEY-BOARD		1-1 H=4.3
S 7A05	432P100O10	SW-KEY-BOARD		1-1 H=4.3
S 7A06	432P100O10	SW-KEY-BOARD		1-1 H=4.3
S 7A07	432P100O10	SW-KEY-BOARD		1-1 H=4.3
S 7A08	432P100O10	SW-KEY-BOARD		1-1 H=4.3
TU 103	295P421O20	2RF-SW		ENPE624
		MISCELLANEOUS		
	453B027O10	CAP-ANODE		
	453B027O20	CAP-ANODE		
	767D048O30	MIRROR		VS-50501
	767C048040	MIRROR		VS-45501

SYMBOL NO.	PARTS NO.	PARTS NAME	DESCRIPTION
	449C134O10	SOCKET-CRT	
	480P039O10	SPEAKER	A(102-118)FL-1
AG5K00	224D019O40	AIR-GAP	2KV
AG900	224D019O40	AIR-GAP	2KV
F 900	283D060O20	FUSE-UL	S5A
F 901	283D038O70	FUSE-UL	S4A
F 902	283D038O70	FUSE-UL	S4A
K 900	287P049O70	RELAY-POWER	DJ12D1-0(M)
PC900	268P033O10	PHOTO-COUPLER	ON3161-R
PJ701	451C129O10	JACK-MICROPHONE	
PJ7601	440C323O10	PIN JACK BOARD	3PIN
PJ7602	440C186O20	JACK-BOARD	PINX6 & SX2
PJ79A0	440C231O10	JACK-BOARD	PINX3 & SX1
PT7A00	264P723O10	LED	SFH310-3
TU101	295P420030	TUNER	ENG26104G
TU102	295P420030	TUNER	ENG26104G
X 200	285P066O10	QUARTZ-CRYSTAL	3.5795MHZ
X 3E1	299P208O10	CERAMIC-OSC	C5B503F58
X 7000	285P069O20	QUARTZ-CRYSTAL	HC-49/U
X 701	285P039O20	QUARTZ-CRYSTAL	8.00MHZ
X 702	285P326O10	QUARTZ-CRYSTAL	6.30MHZ
Z 7706	939P296O60	UNIT-PREAMP	HC-437ME
Z 900	283P039O20	FUSE	SSFR 6.3A
Z 901	283P039O20	FUSE	SSFR 6.3A
Z 902	283P030O90	FUSE	SSFR 4A
Z 903	283P039O20	FUSE	SSFR 6.3A
Z 905	283P030O60	FUSE	SSFR 2A
		PRINTED CIRCUIT BOARDS	
*	935D326O01	ASSY-PWB-AV	
*	935D317O01	ASSY-PWB-CONTROL	
*	935C747O01	ASSY-PWB-CONV	50501
*	935C747002	ASSY-PWB-CONV	45501
*	935C750O01	ASSY-PWB-CRT	
*	935D323O01	ASSY-PWB-DBF	50501
*	935D323002	ASSY-PWB-DBF	45501
*	935D321O01	ASSY-PWB-FRONT	
*	935C745O01	ASSY-PWB-MAIN	50501
*	935C745002	ASSY-PWB-MAIN	45501
*	935D314O01	ASSY-PWB-PIP/APT	
*	935D316O01	ASSY-PWB-PREAMP	
*	935C746O01	ASSY-PWB-SIGNAL	
*	935C746O06	ASSY-PWB-SIGNAL	45501A
*	935D354O01	ASSY-PWB-SVM	
		MECHANICAL PARTS	
	669D212O10	SCREW-TB-BIND	3X12 *10
	669D220O30	SCREW-TB	3X10 46LA005 *10
	669D220O60	SCREW-TB	3X16 46LA005 *10
	669D221O40	SCREW-TB	4X12 46LA005 *10

SYMBOL NO.	PARTS NO.	PARTS NAME	DESCRIPTION
		COSMETIC PARTS	
	246C160O20	AC-POWER-CORD	
	740A365O10	CABINET	50501
	740A383010	CABINET	45501
	701B360O20	FRAME-SCREEN	50501
	701B363O20	FRAME-SCREEN S	50501
	701B360010	FRAME-SCREEN	45501
	701B363010	FRAME-SCREEN S	45501
	622C53O10	HOLDER-SCREEN	50501
	622D539O50	CUSHION	50501
	622D673O10	CUSHION	50501
	700C245O60	BACK BOARD	50501
	622C053020	HOLDER-SCREEN	45501
	622D539020	CUSHION	45501
	622D673020	CUSHION	45501
	700C245080	BACK BOARD	45501
	700C240O90	BACK BOARD	45501A
	641D173O10	CLIP	AC-PWR-CORD
	761C273O10	DOOR-CATCH	45501/50501
	703B024O10	DOOR	50501
	720C188O10	COVER-FRONT	50501
	702A375O20	PANEL-CONTROL	50501
	702A375010	PANEL-CONTROL	45501
	761A102O30	GRILLE-SPEAKER	50501
	761A148010	GRILLE-SPEAKER	45501
	490P138O10	LENS UNIT	45501/50501
	490P138O20	LENS UNIT	45501/50501
	490P138O30	LENS UNIT	45501/50501
	490P154O10	LENS UNIT	45501/50501
	491P031O70	SCREEN-LENTICULAR	50501
	491P043O80	LENS-FRESNEL	50501
	491P035050	SCREEN-LENTICULAR	45501
	491P044O80	LENS-FRESNEL	45501
	702A377O10	SCREEN CAP	45501/50501
	702A377O20	SCREEN CAP	45501/50501

SYMBOL NO.	PARTS NO.	PARTS NAME	DESCRIPTION
		PACKING PARTS AND ACCESSORIES	
1	802B620010	PACKING CASE	45501
1	802B620O30	PACKING CASE	50501
2	829D176O20	PACKING SHEET	45501/50501
3	802B610010	PACKING CASE	45501
3	802B610O30	PACKING CASE	50501
4	831C060O40	PACKING-BAG	45501/50501
5	829D126O90	PACKING-SHEET	45501/50501
6	802B630010	PACKING TRAY	45501
6	802B630O30	PACKING TRAY	50501
7	831D191O30	PACKING-BAG	45501/50501
8	871D223O10	IB	50501
9	242D266O40	CABLE	PLUG-PLUG (3.5)
10	290P080O20	REMOTE HAND UNIT	50501

PACKAGING ITEMS

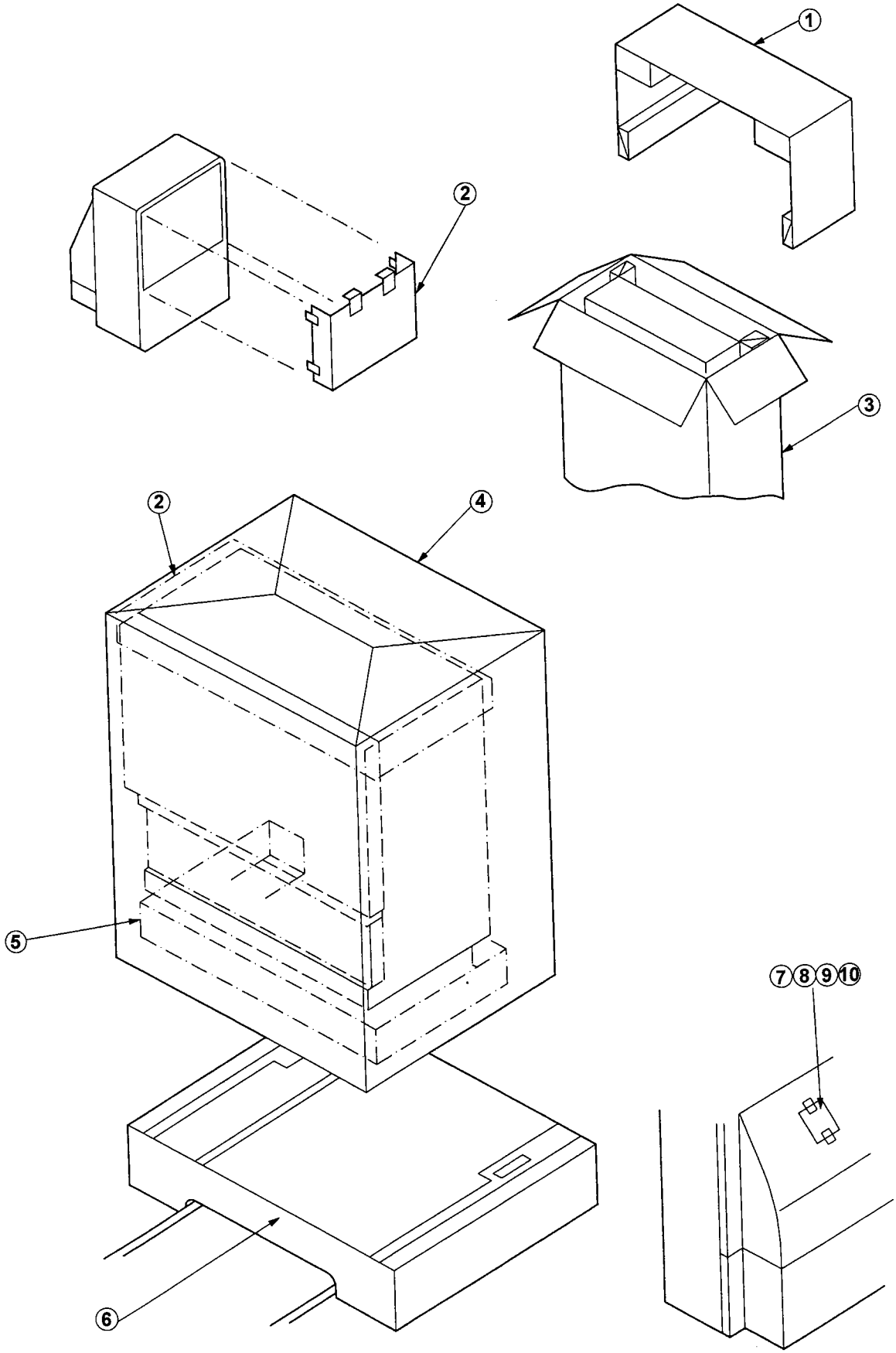

LEAD DRESS

CAUTION: THE INNER WIRES ARE CLAMPED SO THAT THEY DO NOT COME CLOSE TO HEAT GENERATING OR HIGH VOLTAGE PARTS. AFTER SERVICING, ROUTE ALL WIRES IN THEIR ORIGINAL POSITIONS.

Note: The Anode Lead Wires are routed so that no tension is applied to the Anode Caps. If the routes of the Anode Lead Wires are changed during service, return them to their original positions. Clamp the Lead Wires along the clamping path as shown in the figure below. Insure that the Lead Wires are not slack.

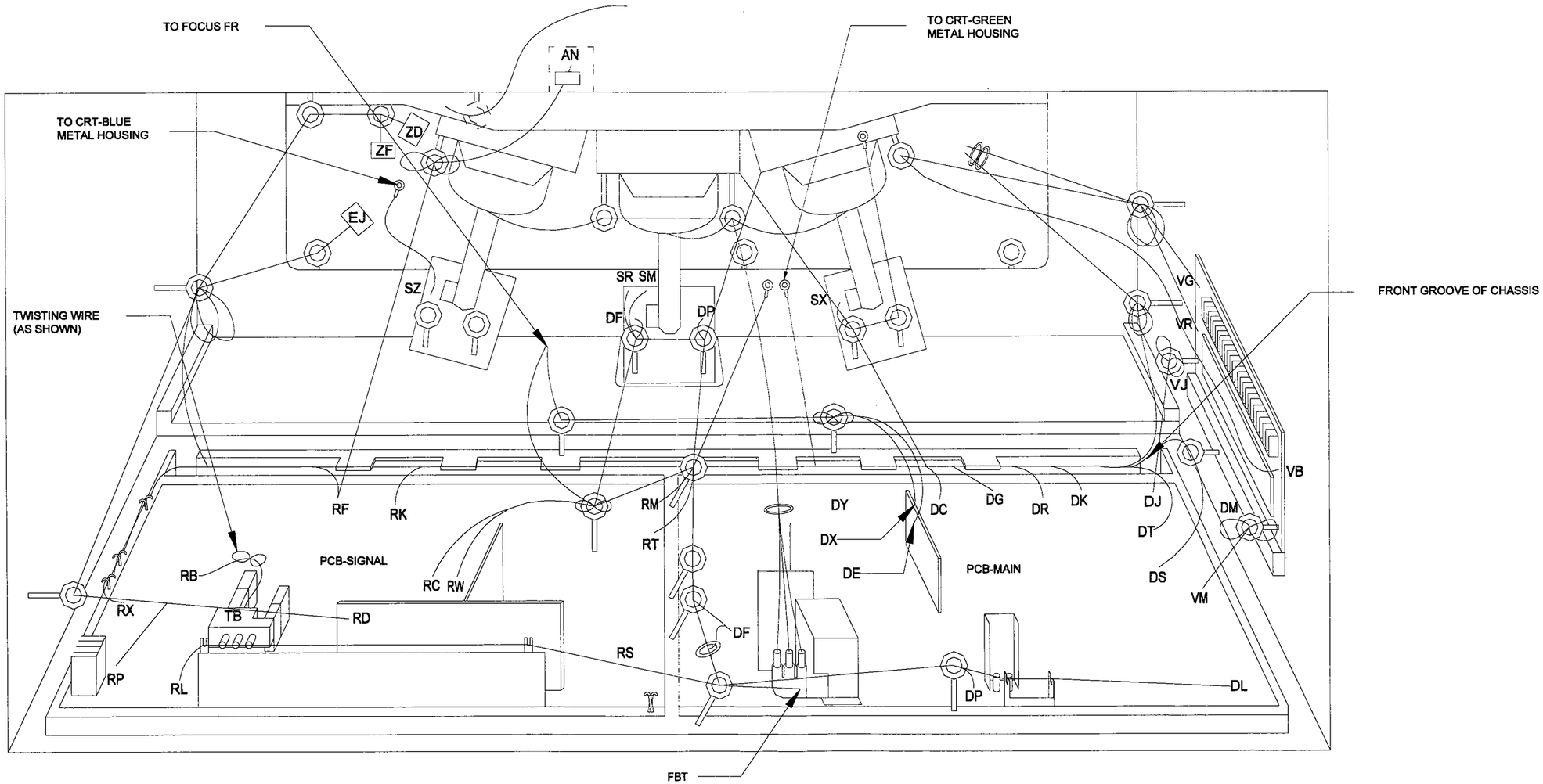

[REAR VIEW]

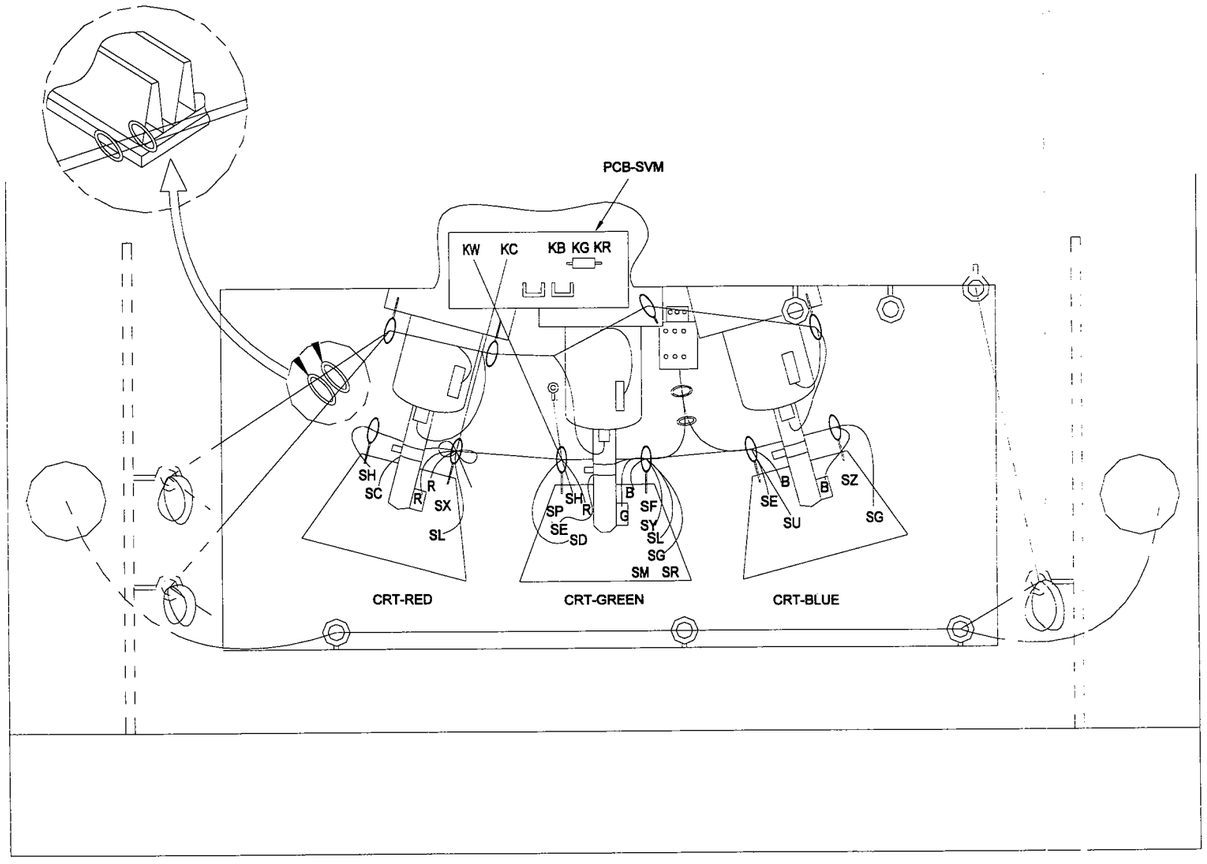

[FRONT VIEW]

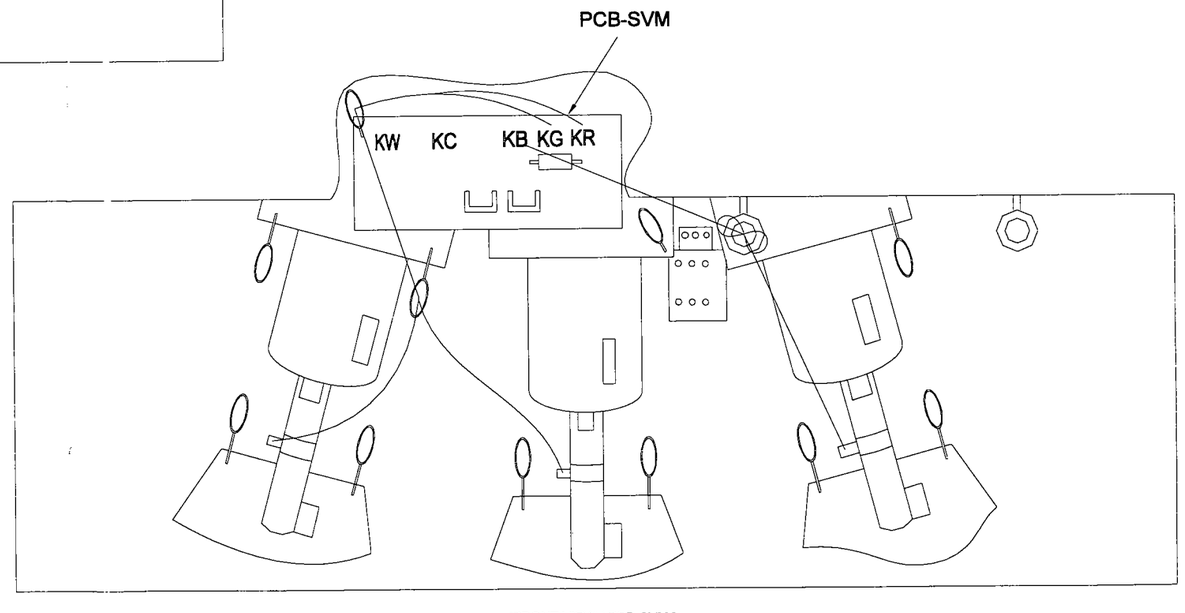

[FRONT VIEW / PCB-SVM]

VZ4 CHASSSIS BLOCK DIAGRAM

POWER

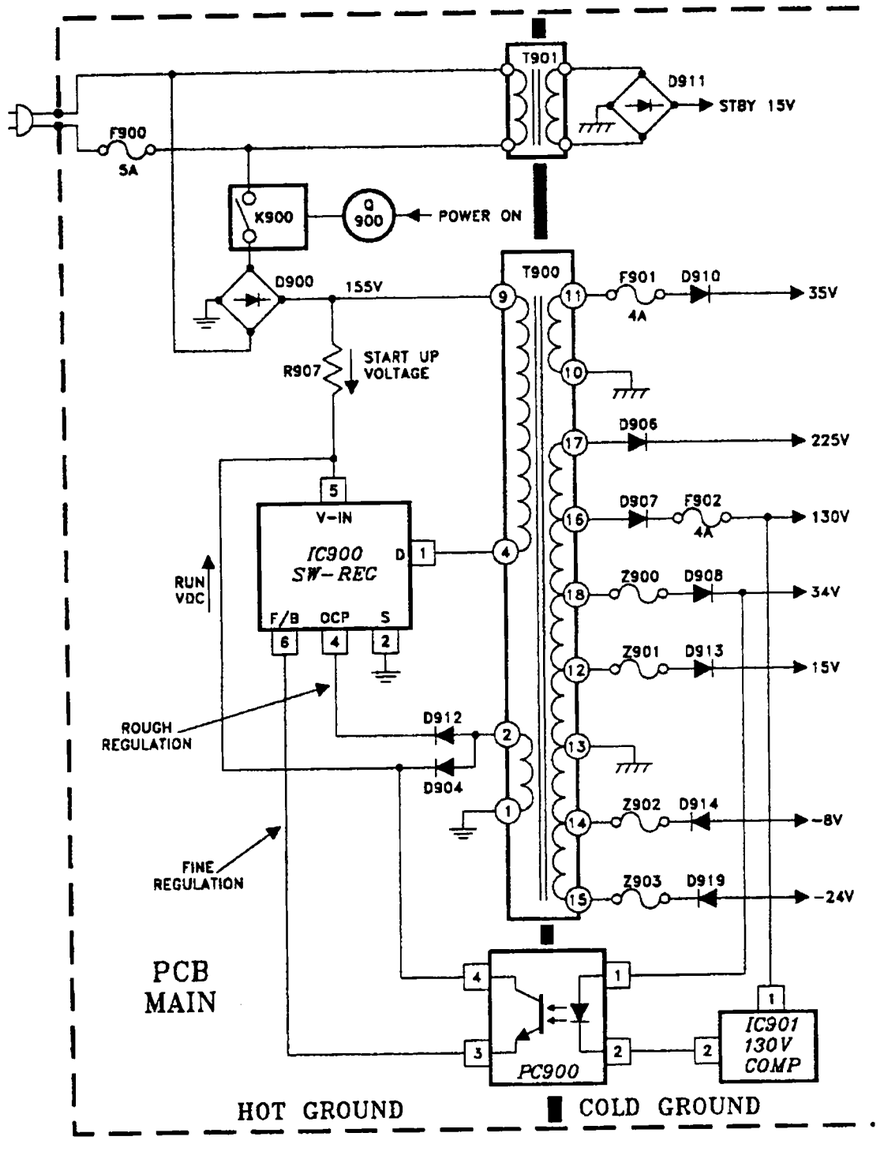

DEFLECTION

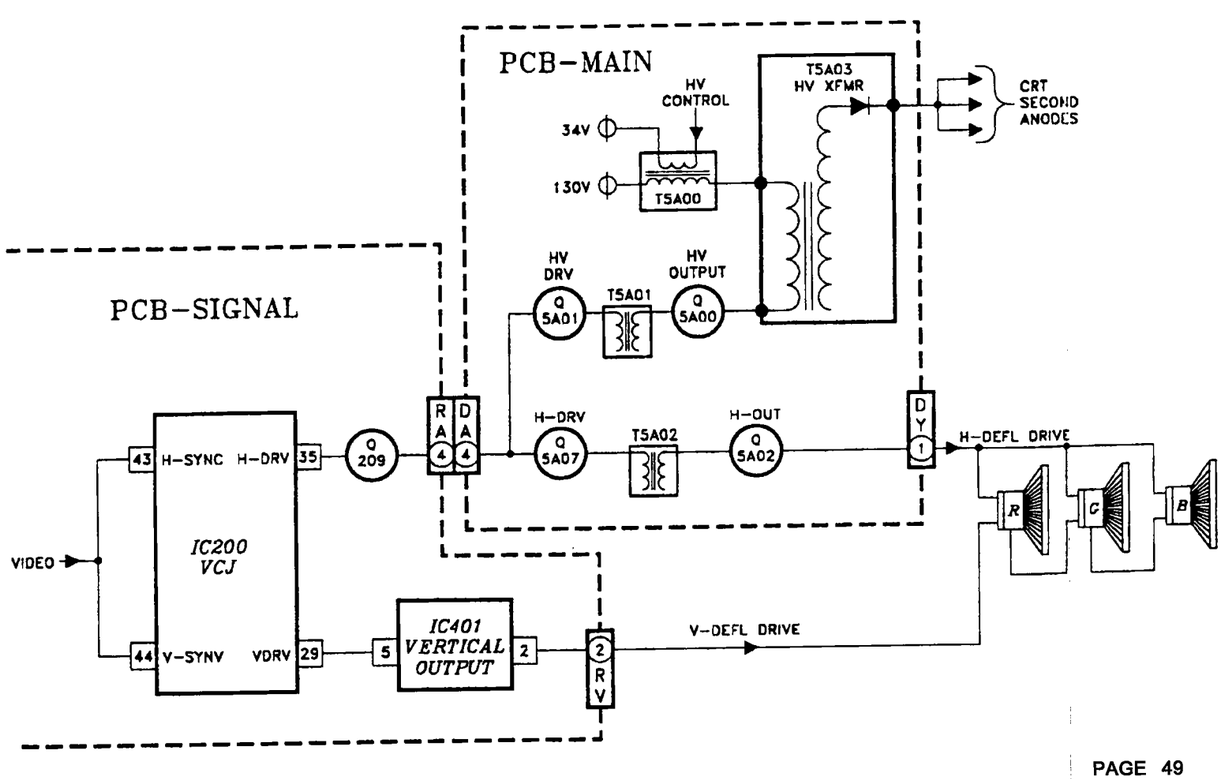

VZ4 CHASSIS SIGNAL PATH DIAGRAM

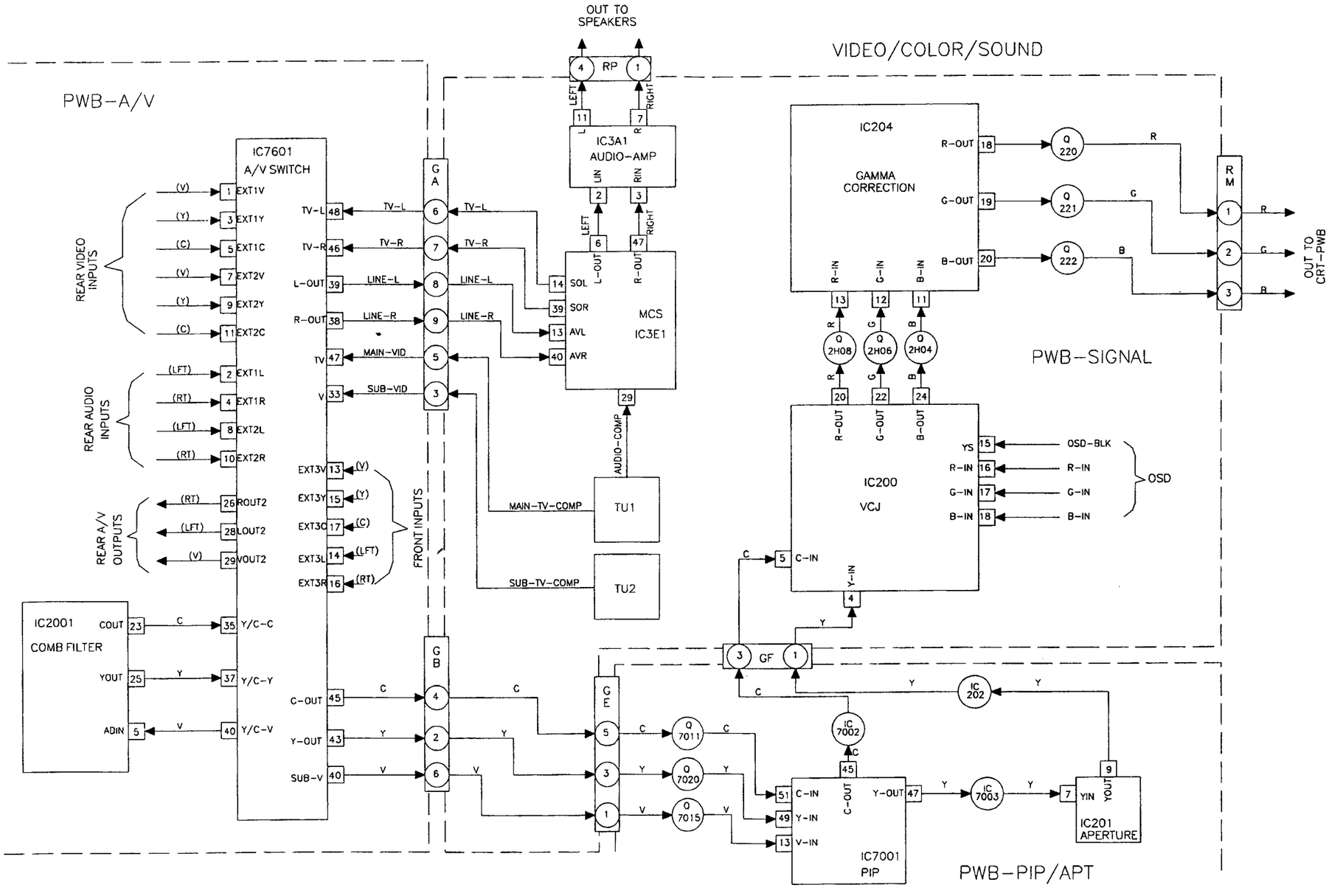

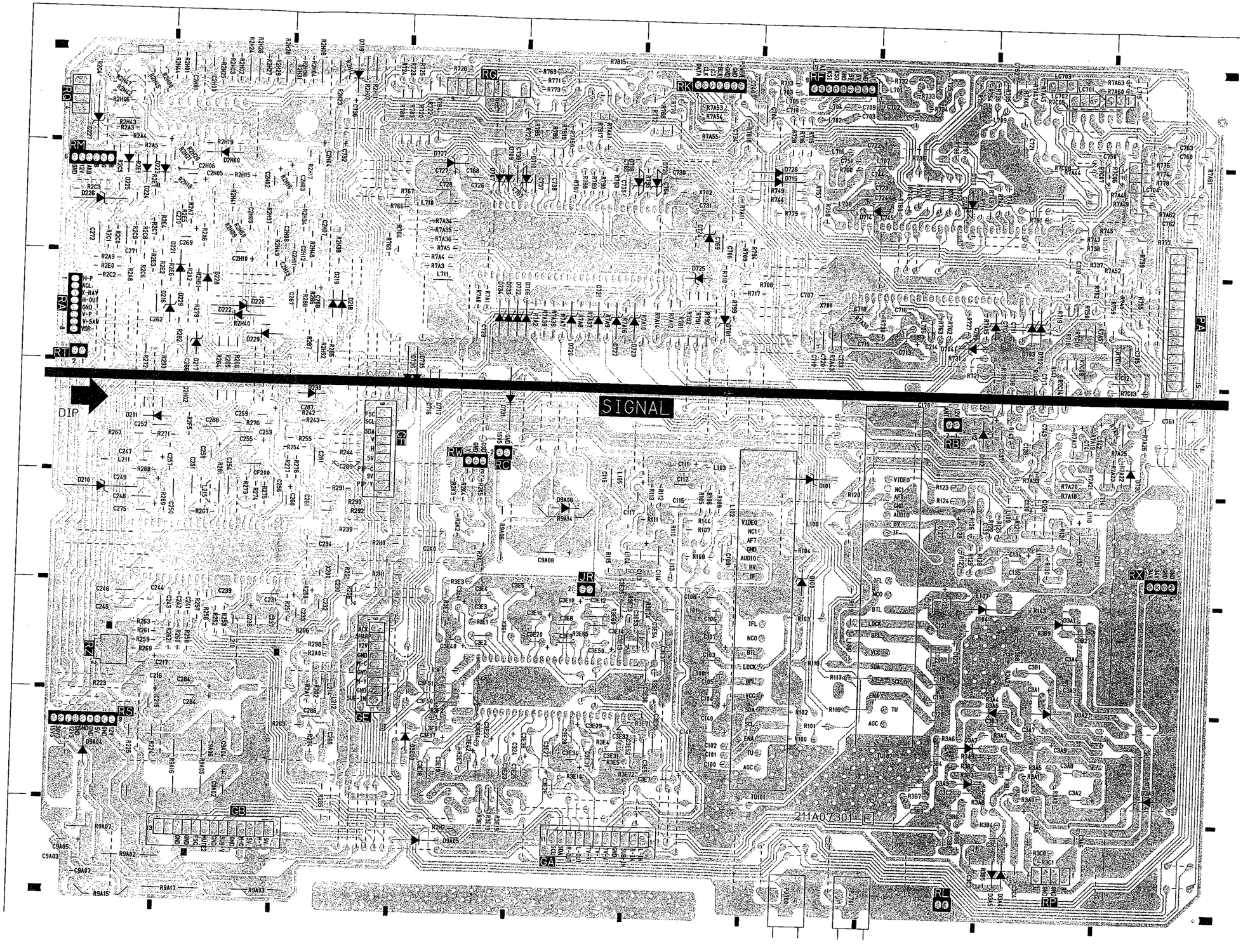
SIGNAL
DIP
RQ
RM
RA
RT
RC
RK
RF
PA
RB
RX
RW
GE
JR
RZ
RS
GB
GA
RL
RP
211A07301

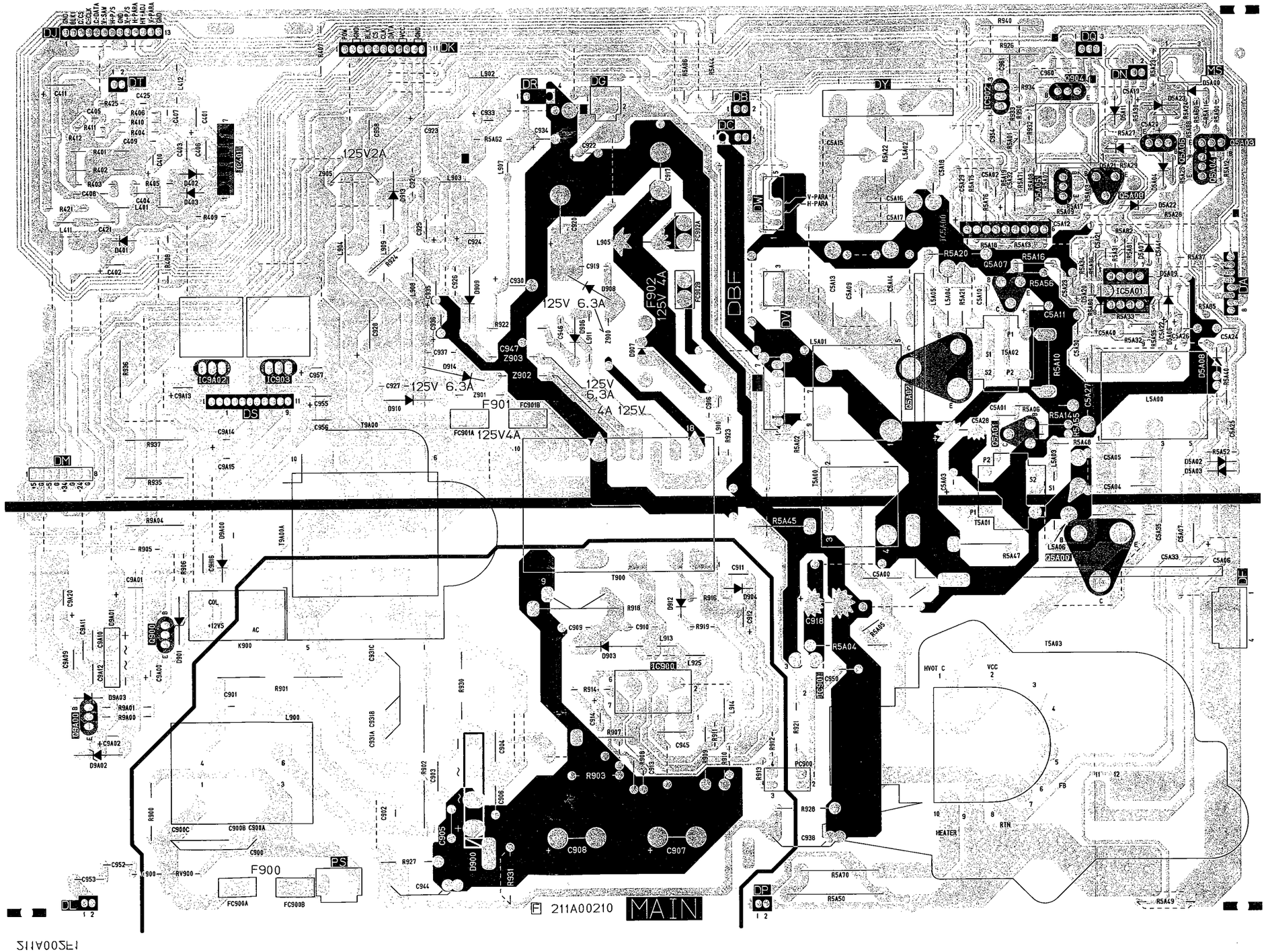
DBF
125V2A
125V 6.3A
F902
125V 4A
125V
6.3A
4A 125V
F901
125V4A
F900
211A00210
MAIN

PCB-MAIN

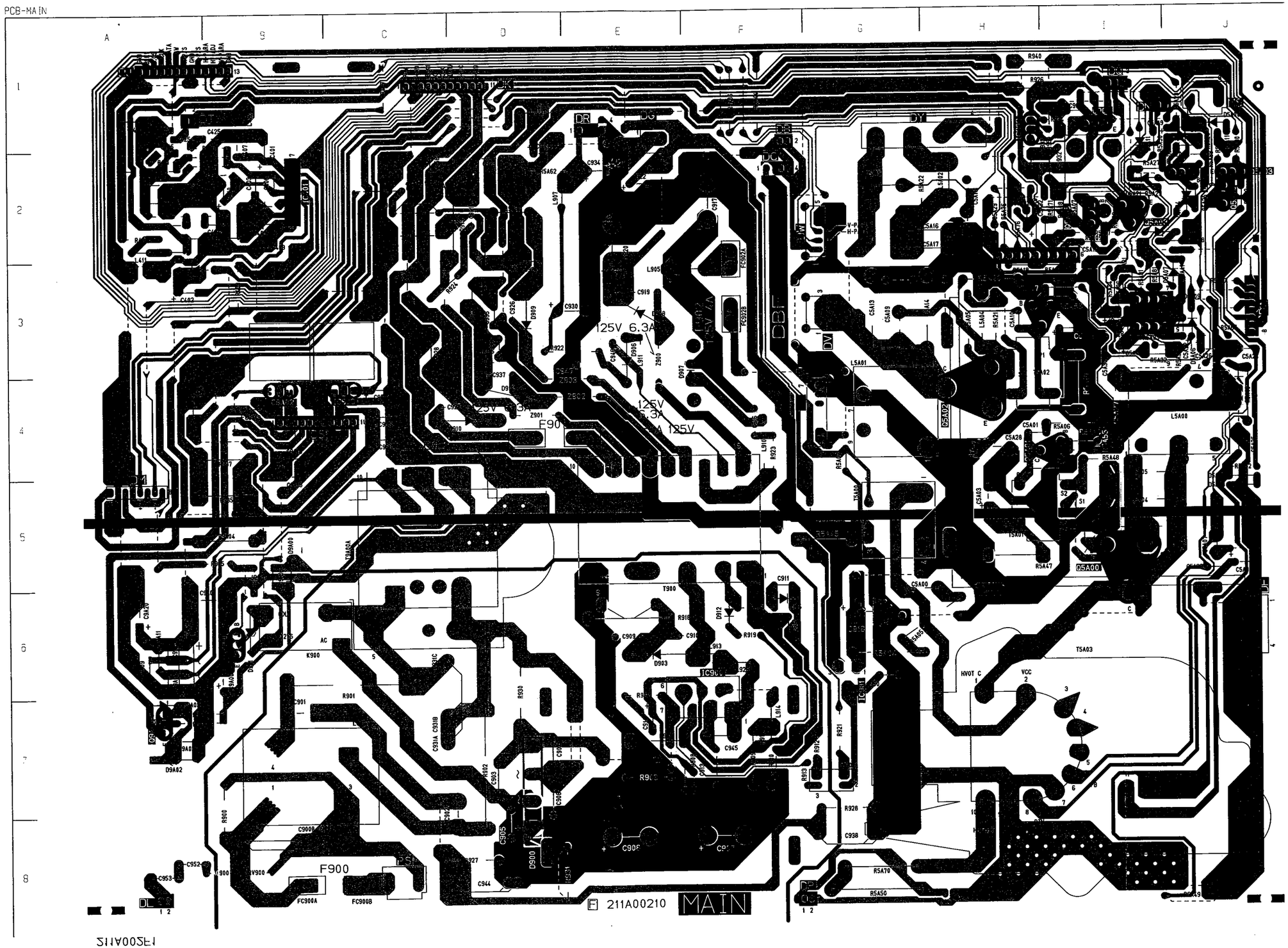

A
B
C
D
E
F
G
H
I
J
1
2
3
4
5
6
7
8
125V 6.3A
125V
F900
DBF
DY
DR
DV
Q5A00
T5A03
HVOT C
VCC
F900
211A00210
MAIN

PCB-SIGNAL

SIGNAL

PCB-SIGNAL SYMBOL/ADDR NO.	
BF203	B
D100	G
D101	G
D102	H
D104	H
D210	A
D211	A
D216	A
D217	B
D218	C
D219	D
D220	B
D223	A
D224	A
D225	A
D227	A
D228	B
D229	B
D230	C
D2300	B
D2302	B
D3A1	I
D3A2	I
D3A3	H
D3A4	I
D3A5	I
D3A6	I
D3A7	I
D3A8	I
D3E00	D
D701	E
D702	E
D703	E
D704	E
D705	E
D707	E
D709	D
D710	D
D713	D
D714	D
D715	D
D716	D
D717	D
D718	D
D719	D
D720	D
D721	D
D722	D
D723	D
D724	D
D725	D
D726	D
D727	D
D728	D
D730	D
D731	D
D732	D
D733	D
D734	D

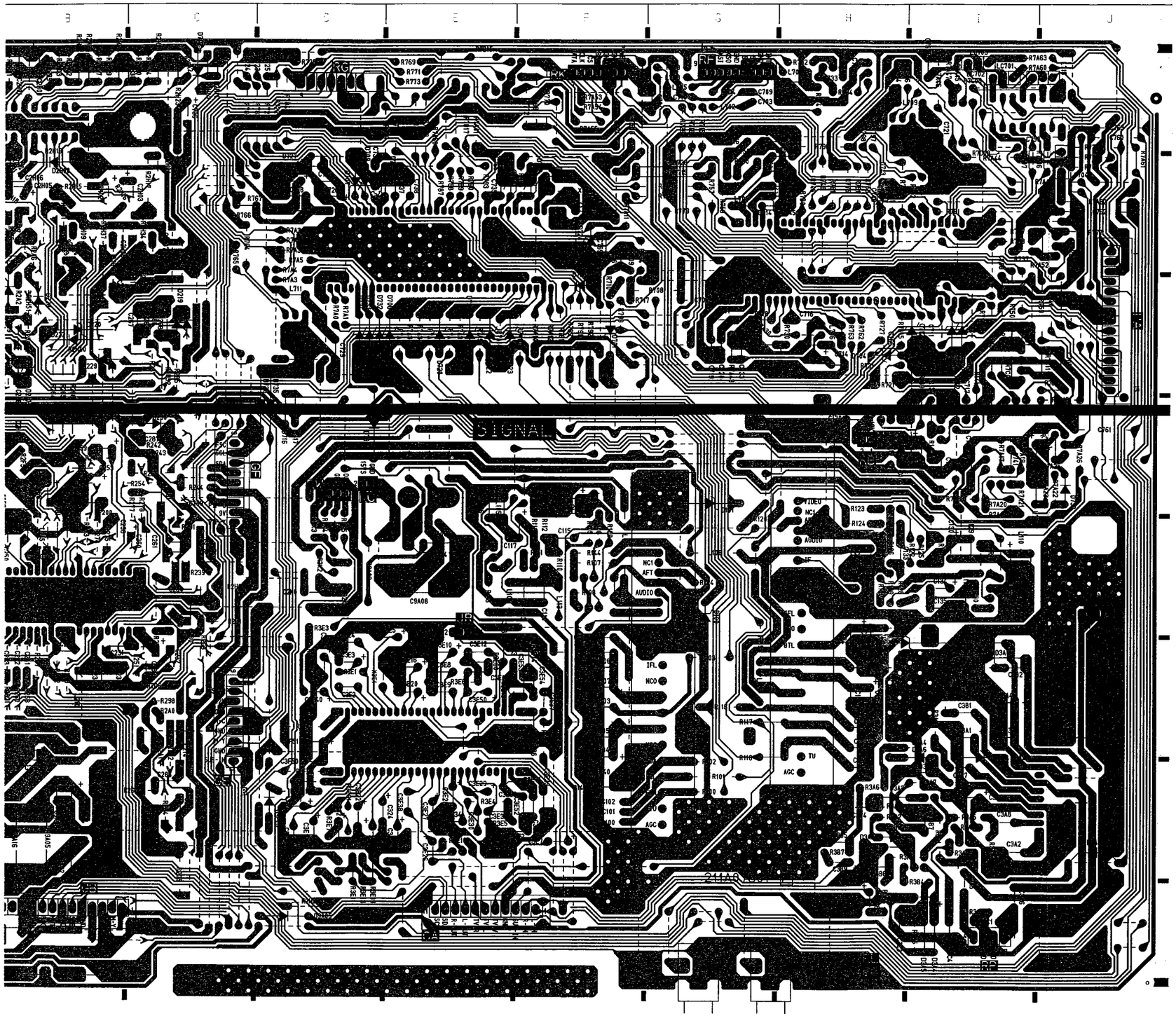

PCB-SIGNAL

SYMBOL NO.	ADDRESS
CF200	B-4
D100	G-5
D101	G-4
D102	H-4
D104	H-6
D210	A-5
D211	A-4
D216	A-3
D217	B-3
D218	C-3
D219	C-3
D220	B-3
D223	A-2
D224	A-2
D225	A-2
D227	A-1
D228	B-3
D229	B-3
D230	C-4
D2H00	B-2
D2H02	B-4
D3A1	I-6
D3A2	I-6
D3A3	H-7
D3A4	I-8
D3A5	I-8
D3A6	I-6
D3A7	H-7
D3A8	J-7
D3E00	D-7
D701	F-3
D702	I-3
D703	I-3
D704	H-3
D706	E-3
D707	D-2
D709	D-2
D710	D-2
D713	H-2
D714	G-2
D715	G-2
D716	D-4
D717	D-4
D718	E-2
D719	C-1
D720	E-3
D721	E-3
D722	E-3
D723	E-3
D724	F-2
D725	F-2
D726	F-3
D727	D-2
D728	G-2
D730	J-4
D731	D-4
D732	D-3
D733	D-3
D734	D-3

SYMBOL NO.	ADDRESS
D735	D-3
D736	D-3
D9A04	A-7
D9A05	D-8
D9A06	E-5
IC200	B-5
IC203	B-6
IC204	B-1
IC3A1	I-7
IC3E1	E-6
IC700	H-2
IC701	D-3
IC702	G-2
IC703	E-2
IC705	I-1
IC706	H-1
IC9A00	B-7
IC9A01	A-7
IC9A12	E-4
L100	F-6
L101	F-6
L102	F-5
L103	F-4
L104	E-5
L105	E-4
L106	G-6
L107	H-5
L108	G-5
L109	I-5
L110	I-5
L111	I-5
L112	H-4
L113	F-5
L210	B-5
L211	A-4
L212	C-7
L214	C-6
L215	B-5
L701	H-1
L702	G-1
L703	G-1
L704	G-1
L705	G-1
L706	H-3
L707	G-2
L708	G-2
L709	H-1
L710	D-2
L711	D-3
L714	I-4
L715	J-1
L716	G-1
LC701	I-1
LC702	I-1
LC703	I-1
LC704	J-2
PJ700	G-8

SYMBOL NO.	ADDRESS
PJ701	G-8
Q100	F-5
Q101	F-5
Q102	F-5
Q102	E-5
Q103	E-5
Q104	H-5
Q105	H-4
Q106	I-5
Q107	I-5
Q109	H-4
Q110	I-4
Q206	C-4
Q209	A-3
Q210	C-5
Q211	C-6
Q212	C-6
Q213	C-4
Q214	C-3
Q215	C-3
Q216	B-3
Q217	B-2
Q220	A-2
Q221	A-2
Q222	A-2
Q224	C-5
Q225	C-7
Q2H04	B-2
Q2H05	B-2
Q2H06	B-2
Q2H07	B-2
Q2H08	B-2
Q2H09	B-2
Q2H10	A-1
Q2H11	A-1
Q2H12	A-1
Q2K0	D-5
Q314	I-7
Q3A1	I-7
Q3A2	H-6
Q3A3	I-7
Q3E01	E-7
Q3E02	D-7
Q3E03	D-7
Q701	F-3
Q705	H-1
Q706	H-1
Q708	J-2
Q709	E-1
Q710	E-1
Q711	E-1
Q712	I-4
Q713	I-4
Q714	J-4
Q715	I-1
Q716	I-1
Q7C00	I-3
Q7C01	I-4

SYMBOL NO.	ADDRESS
TP11	F-5
TP11A	H-5
TU101	G-5
TU102	H-5
X200	C-5
X3E1	D-6
X701	G-3
X702	F-2

PCB-MAIN

PCB-MAIN

SYMBOL NO.	ADDRESS
AG900	B-8
D401	A-3
D402	B-2
D403	B-2
D5A00	J-1
D5A02	J-4
D5A03	J-1
D5A04	J-2
D5A06	J-3
D5A07	J-3
D5A08	J-4
D5A09	J-3
D5A11	I-1
D5A20	I-3
D5A21	I-2
D5A22	I-2
D5A23	J-1
D5A27	I-2
D900	D-7
D901	B-6
D903	E-6
D904	F-6
D906	E-3
D907	F-3
D908	E-3
D909	D-3
D910	D-4
D912	F-6
D913	D-2
D914	D-4
D9AC3	B-5
D9A01	A-6
D9A02	A-7
D9A03	A-7
F900	B-8
F901	D-4
F902	F-3
FC900A	B-8
FC900B	B-8
FC901A	D-4
FC901B	D-4
FC902A	F-3
FC902B	F-3
IC401	B-2
IC5A00	H-3
IC5A01	I-3
IC900	F-6
IC901	H-1
IC902	G-6
IC903	D-4
IC9A02	B-4
K900	B-6
L401	B-2
L411	A-2

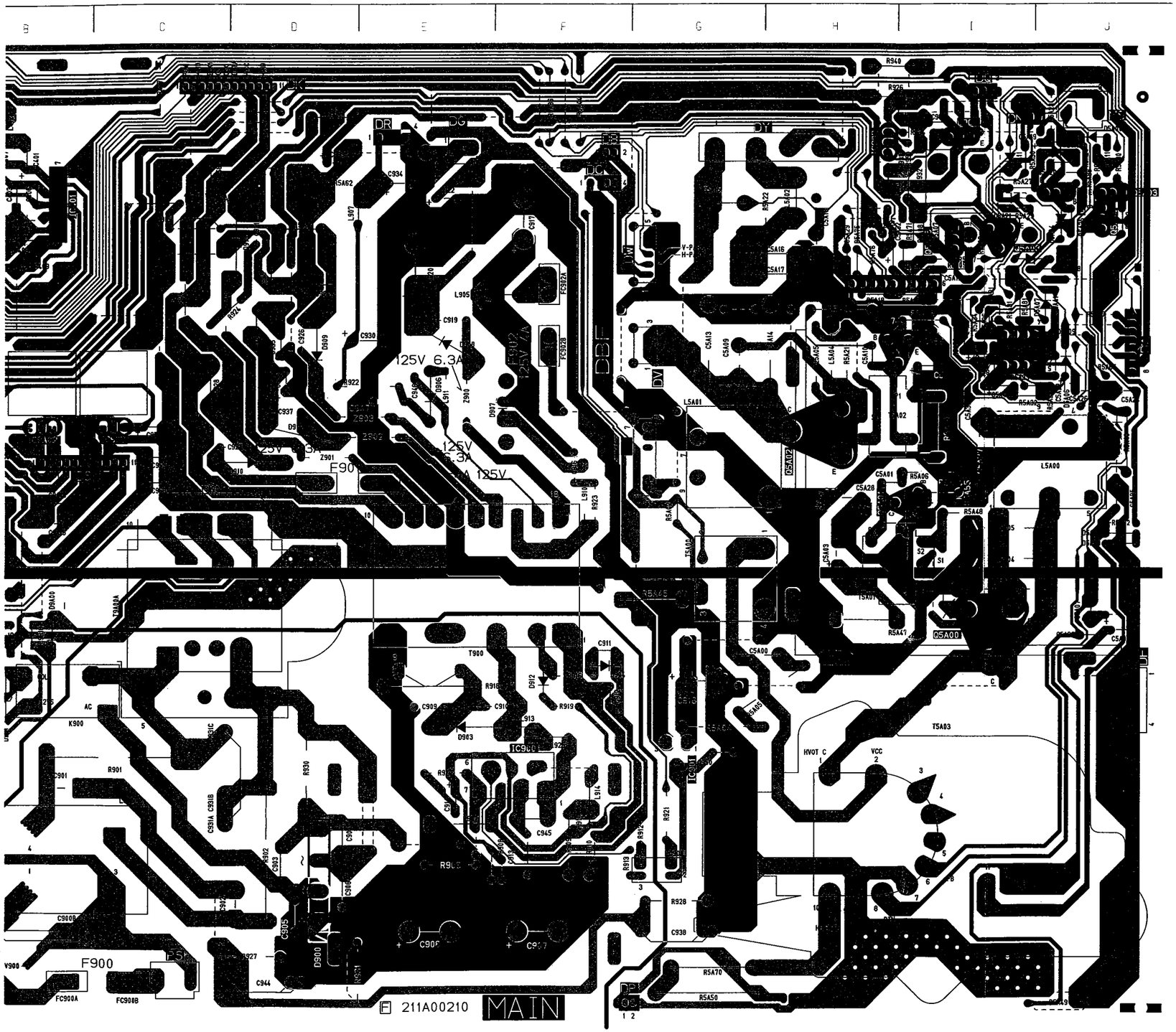

PCB-MAIN

SYMBOL NO.	ADDRESS
AG900	B-8
D401	A-3
D402	B-2
D403	B-2
D5A00	J-1
D5A02	J-4
D5A03	J-1
D5A04	J-2
D5A06	J-3
D5A07	J-3
D5A08	J-4
D5A09	J-3
D5A11	I-1
D5A20	I-3
D5A21	I-2
D5A22	I-2
D5A23	J-1
D5A27	I-2
D900	D-7
D901	B-6
D903	E-6
D904	F-6
D906	E-3
D907	F-3
D908	E-3
D909	D-3
D910	D-4
D912	F-6
D913	D-2
D914	D-4
D9A00	B-5
D9A01	A-6
D9A02	A-7
D9A03	A-7
F900	B-8
F901	D-4
F902	F-3
FC900A	B-8
FC900B	C-8
FC901A	D-4
FC901B	E-4
FC902A	F-3
FC902B	F-3
IC401	B-2
IC5A00	H-3
IC5A01	I-3
IC900	F-6
IC901	H-1
IC902	G-6
IC903	C-4
IC9A02	B-4
K900	B-6
L401	B-2
L411	A-2

SYMBOL NO.	ADDRESS
L411	A-3
L412	B-1
L5A00	I-4
L5A01	H-3
L5A01	G-4
L5A02	H-2
L5A03	I-5
L5A05	H-3
L5A06	I-5
L900	B-6
L902	D-1
L903	D-2
L904	C-3
L905	F-3
L907	D-2
L908	D-3
L909	C-3
L910	F-4
L911	E-3
L913	F-6
L914	F-7
L925	F-6
PC900	G-7
Q5A00	I-5
Q5A01	I-4
Q5A02	H-4
Q5A03	J-2
Q5A04	J-2
Q5A05	I-2
Q5A06	J-2
Q5A08	I-2
Q900	B-6
Q904	I-1
Q9A00	A-7
T5A00	G-5
T5A01	H-5
T5A02	H-3
T5A02	H-4
T5A03	H-7
T900	E-5
T900A	C-5
Z900	E-3
Z901	D-4
Z902	E-4
Z903	D-4
Z905	C-2

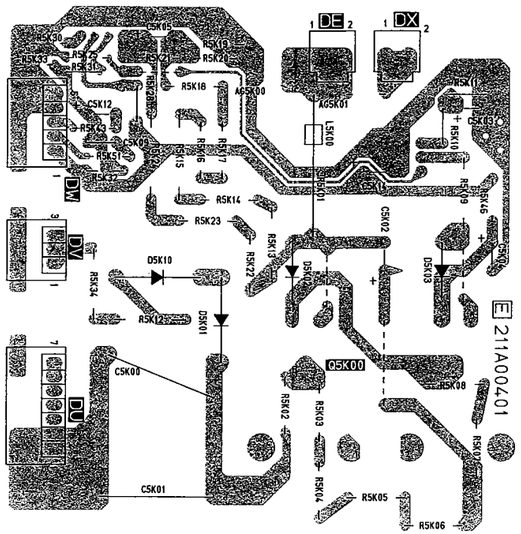
DE
DX
DW
DV
DU
E 211A00401
C5K00
C5K01
C5K02
C5K03
D5K00
D5K01
D5K10
L5K00
R5K00
R5K01
R5K02
R5K03
R5K04
R5K05
R5K06
R5K08
R5K10
R5K12
R5K13
R5K14
R5K15
R5K16
R5K17
R5K18
R5K19
R5K20
R5K21
R5K22
R5K23
R5K24
R5K25
R5K26
R5K27
R5K28
R5K29
R5K30
R5K31
R5K32
R5K33
R5K34
R5K35
R5K36
R5K37
R5K38
R5K39
R5K40
R5K41
R5K42
R5K43
R5K44
R5K45
R5K46
R5K47
R5K48
R5K49
R5K50
R5K51

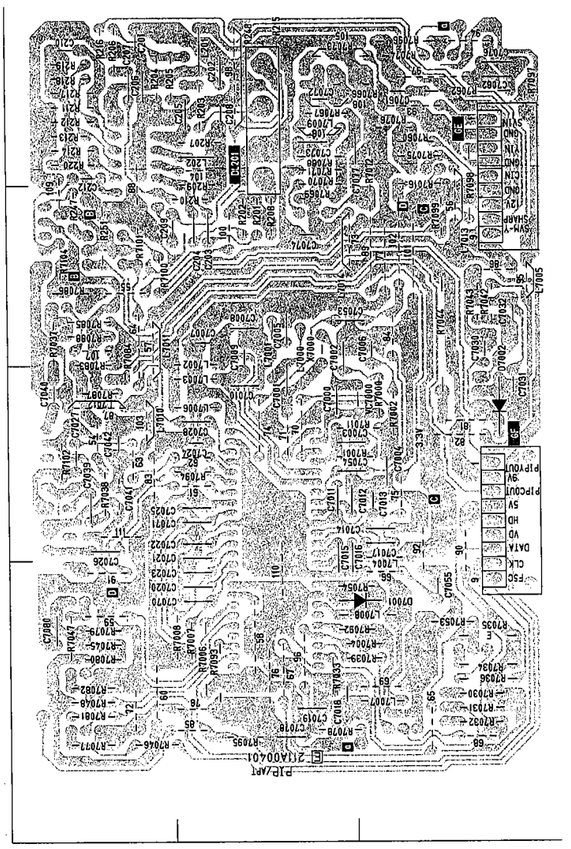

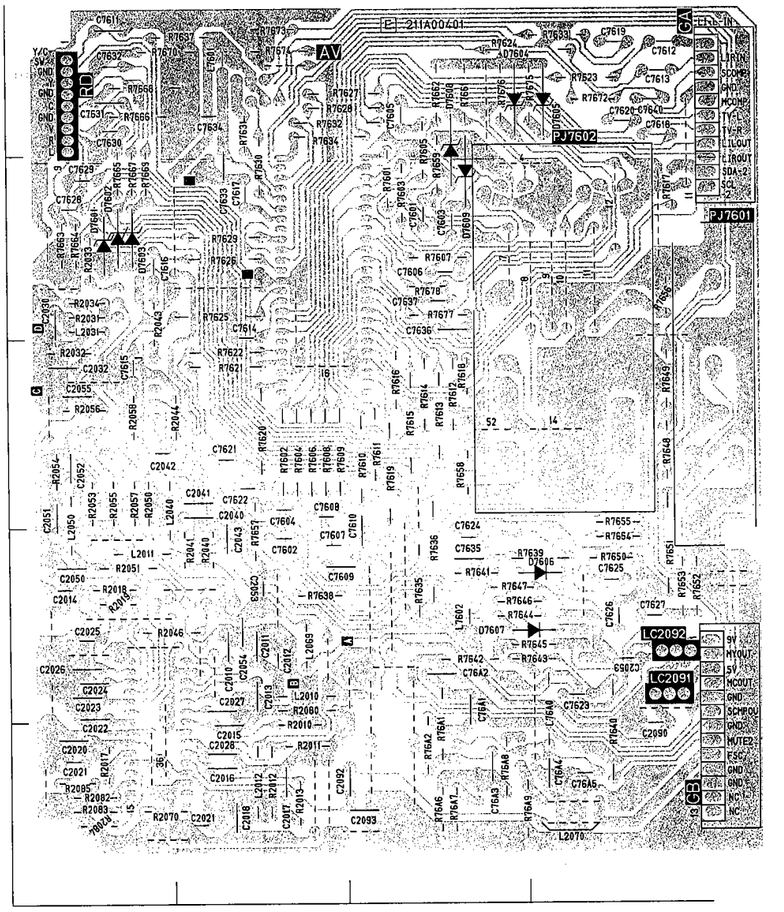
E 211A00401
PJ7602
PJ7601
LC2092
LC2091

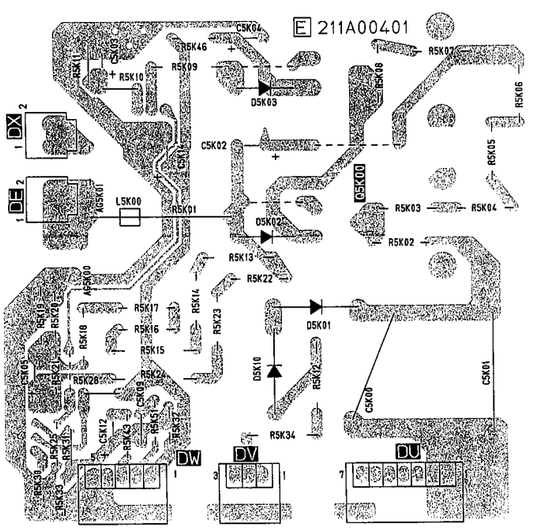
E 211A00401
DX
DE
DW
DV
DU

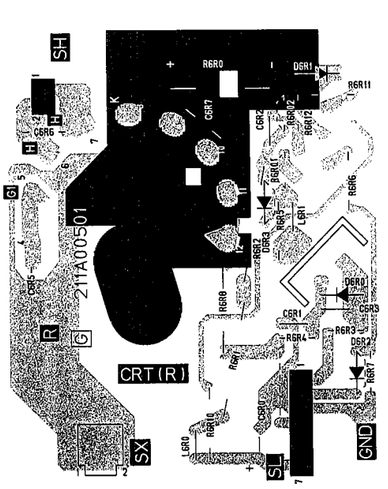
211A00501
CRT(R)
SH
SX
SL
GND

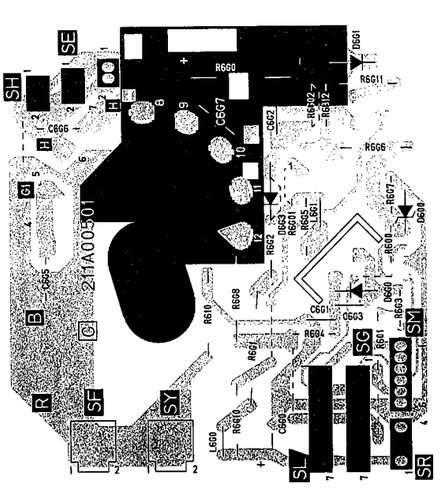
211A00501
SE
SH
SF
SY
SG
SM
SL
SR

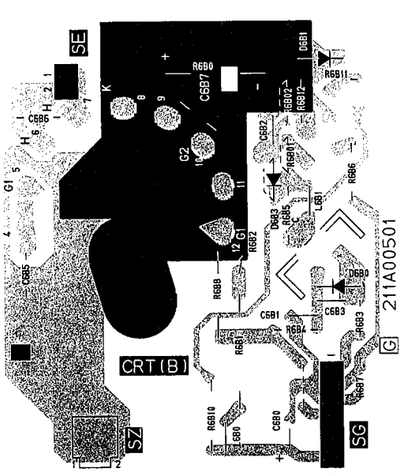
211A00501
CRT(B)
SE
SZ
SG

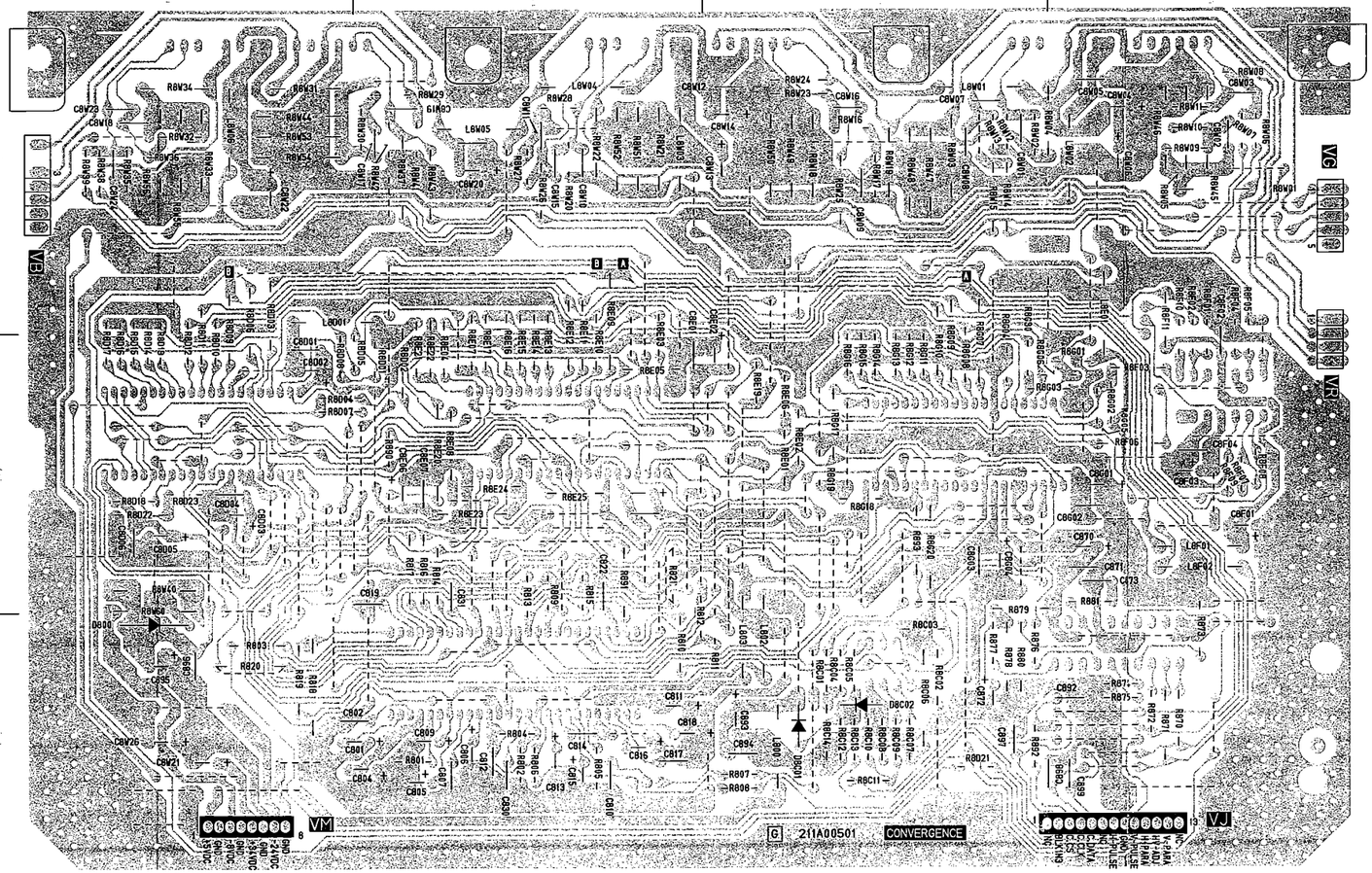
VB
VG
VR
VM
VJ
G 211A00501
CONVERGENCE

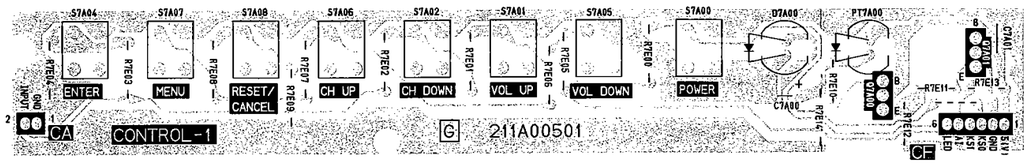
S7A04
ENTER
S7A07
MENU
S7A08
RESET/ CANCEL
S7A06
CH UP
S7A02
CH DOWN
S7A01
VOL UP
S7A05
VOL DOWN
S7A00
POWER
D7A00
PT7A00
CA
CONTROL-1
G 211A00501
CF

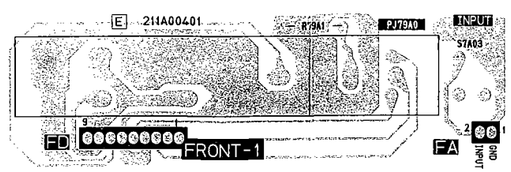
E 211A00401
PJ7B40
INPUT
S7A03
FD
FRONT-1
FA

AN
5V
GND
INT

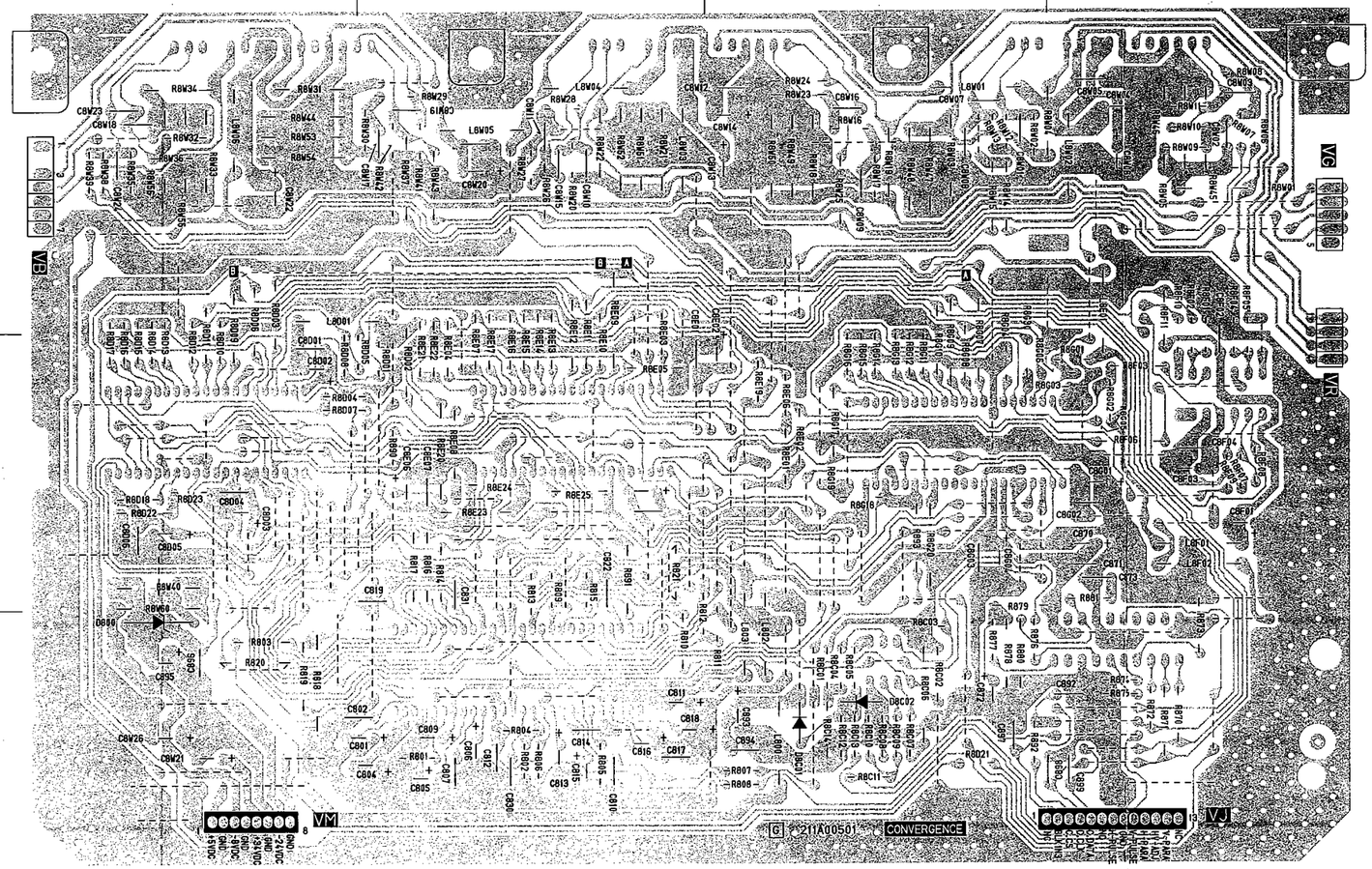
VC
VB
VR
VM
VJ
G 211A00501
CONVERGENCE

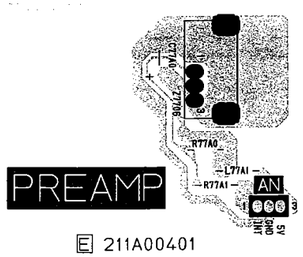
PREAMP
AN
E 211A00401

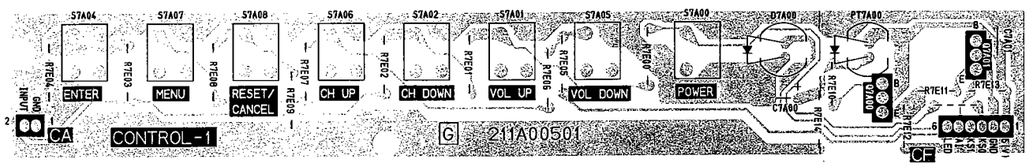
S7A04
ENTER
S7A07
MENU
S7A08
RESET/
CANCEL
S7A06
CH UP
S7A02
CH DOWN
S7A01
VOL UP
S7A05
VOL DOWN
S7A00
POWER
CA
CONTROL-1
G 211A00501
CF

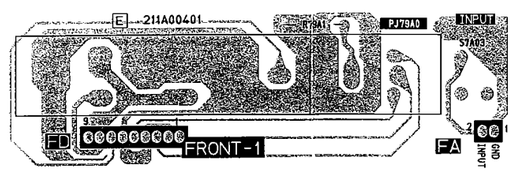
E 211A00401
INPUT
S7A03
FD
FRONT-1
FA

PCB-PIP/APT

SYMBOL NO.	ADDRESS
D7001	A-3
D7002	B-3
DL201	D-2
IC201	D-1
IC202	D-1
IC7001	A-2
IC7002	B-1
IC7003	B-1
IC7004	B-3
L201	D-2
L202	D-2
L7000	D-2
L7001	D-2
L7004	B-3
L7005	D-3
L7007	A-3
L7008	A-3
L7009	D-2
Q201	D-1
Q208	C-1
Q7000	D-3
Q7006	A-3
Q7007	A-3
Q7008	A-3
Q7011	D-3
Q7013	A-1
Q7014	A-1
Q7015	D-2
Q7016	C-2
Q7017	C-1
Q7018	B-1
Q7019	A-1
Q7020	C-1
TP61	A-1
TP62	B-1
TP63	B-1
TPGND	A-1
VC7000	B-2
X7000	C-2

PCB-A/V

SYMBOL NO.	ADDRESS
D7601	D-4
D7602	D-4
D7603	D-4
D7604	E-6
D7606	B-7
D7607	B-7
D7608	E-6
D7609	D-6
IC2001	A-4
IC2002	C-4
IC7601	D-5
L2010	B-5
L2011	B-4
L2012	A-5
L2031	D-4
L2040	C-4
L2050	B-4
L2069	B-5
L2070	A-7
L7601	E-5
L7602	B-6
L76A0	A-7
LC2091	B-7
LC2092	B-7
PJ7601	D-7
PJ7602	G-7
Q2030	D-4
Q2040	B-5
Q2050	B-4
Q2051	C-4
Q2052	C-4
Q7601	B-7
Q7602	B-7
Q7603	B-6
Q7670	E-5
Q7671	E-5
Q76A0	A-6
Q76A1	A-6
Q76A2	A-6

PCB-CONVERGENCE

SYMBOL NO.	ADDRESS
D800	A-3
D8C01	C-3
D8C02	C-3
IC800	B-3
IC870	D-3
IC8C00	C-3
IC8D00	A-2
IC8E00	B-2
IC8F00	D-2
IC8G00	C-2
IC8W00	D-1
IC8W01	B-1
IC8W02	A-1
L800	C-3
L802	C-3
L803	C-3
L8D01	A-1
L8E01	D-1
L8F01	D-2
L8F02	D-2
L8W01	C-1
L8W02	D-1
L8W03	B-1
L8W04	B-1
L8W05	B-1
LW806	A-1
Q800	B-3
Q9F00	D-1

PCB-SIGNAL

200 CXA2095S

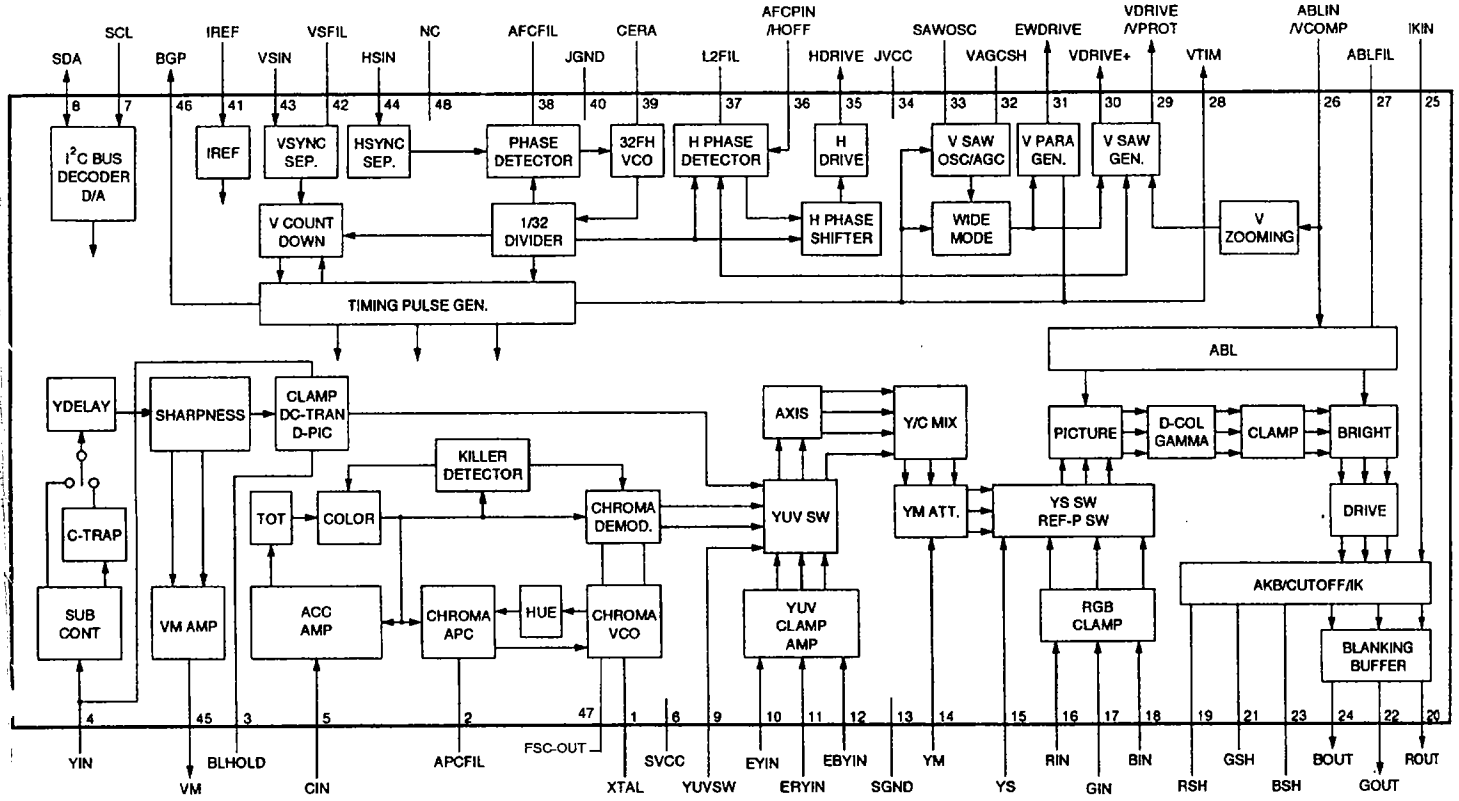

E1 TDA9855

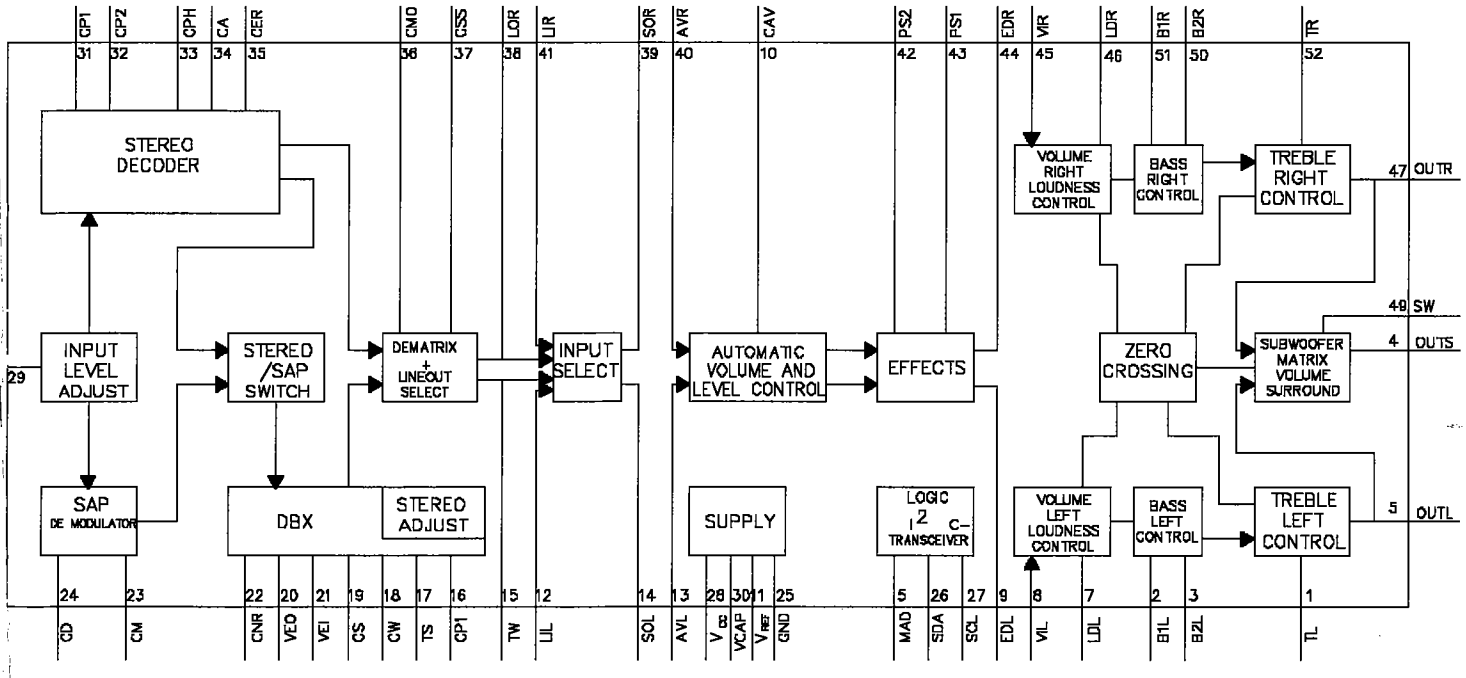

IC700 M37270EFSP

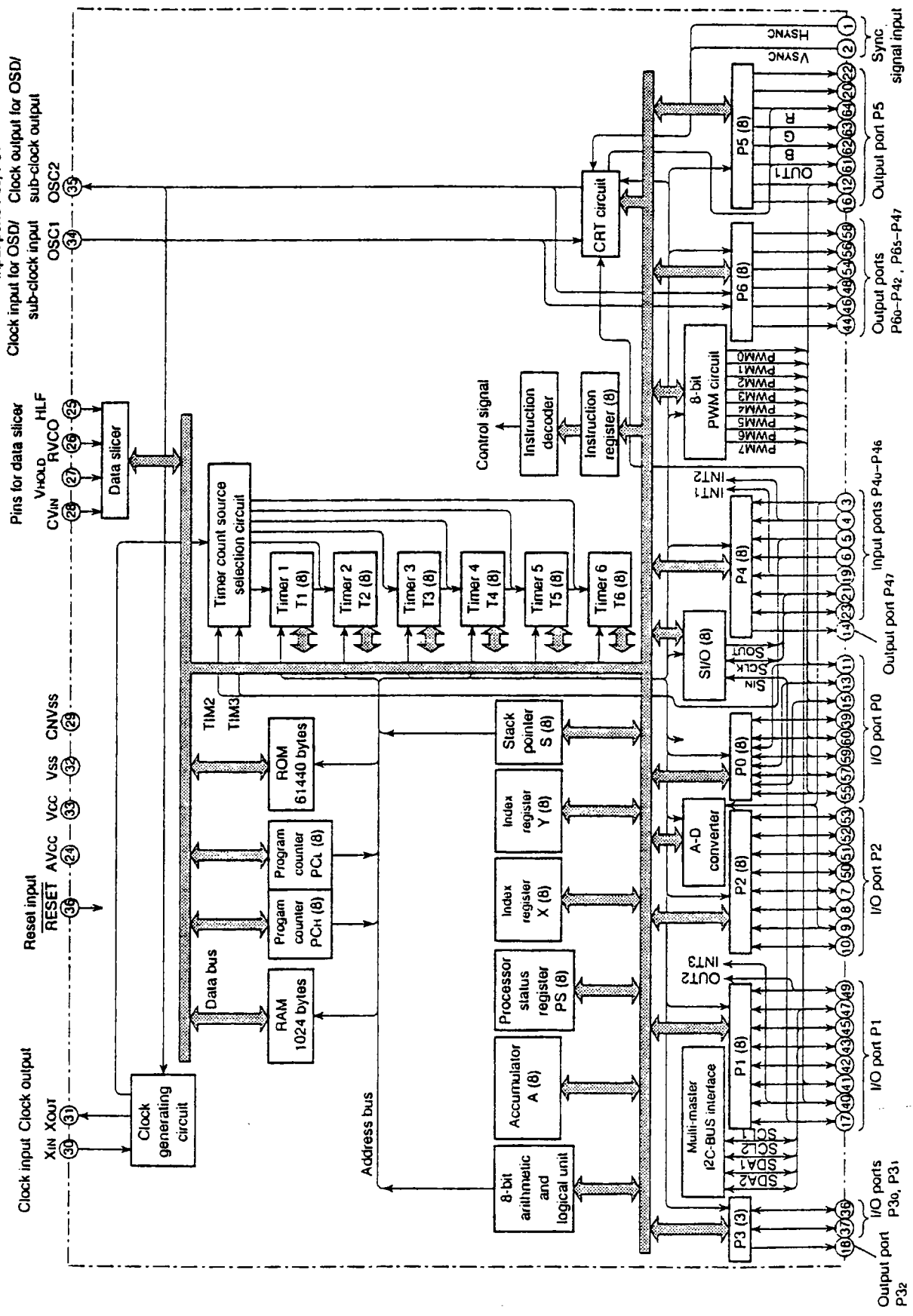

703 M38123E6SP

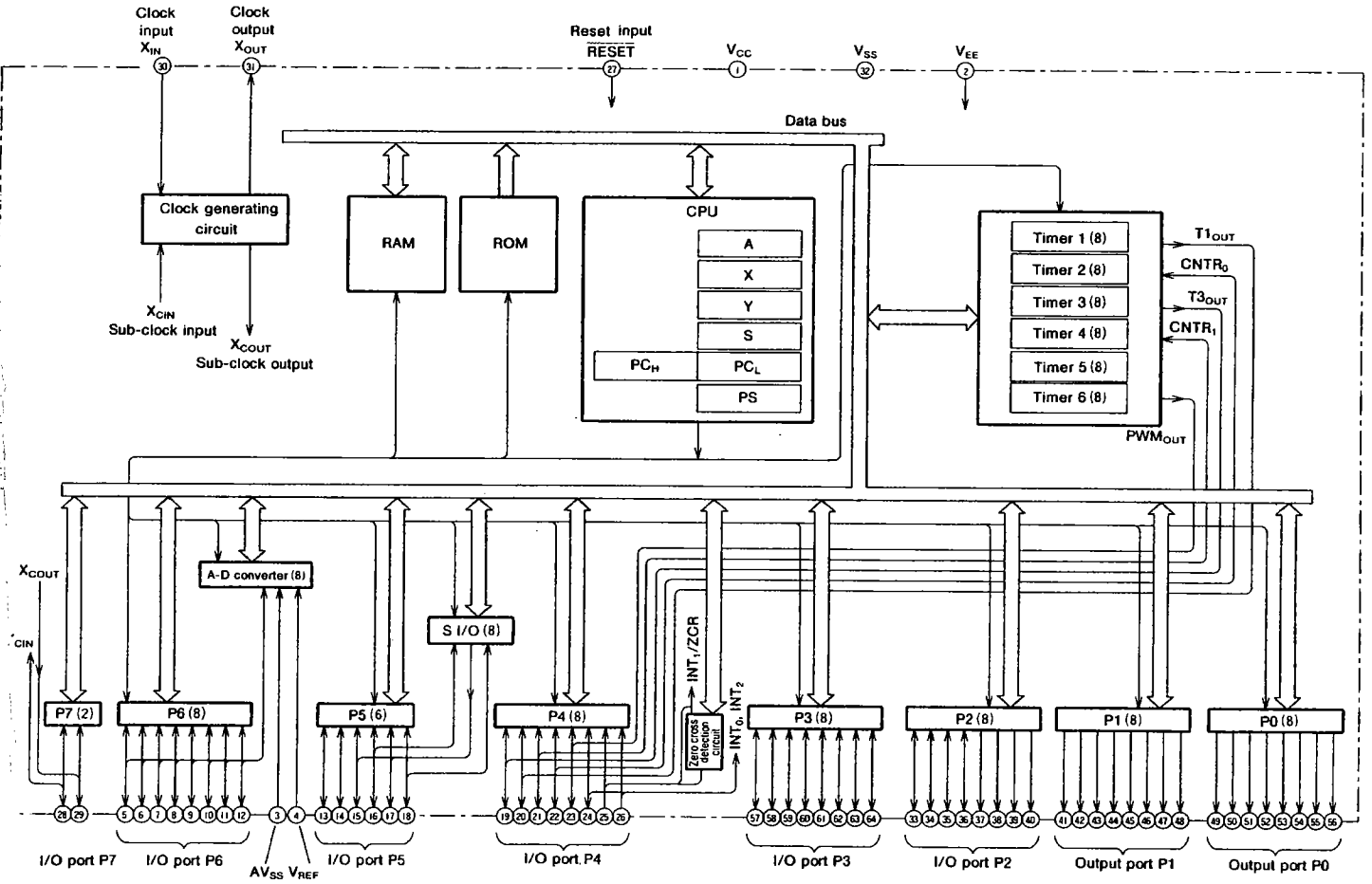

1 24C04A*P

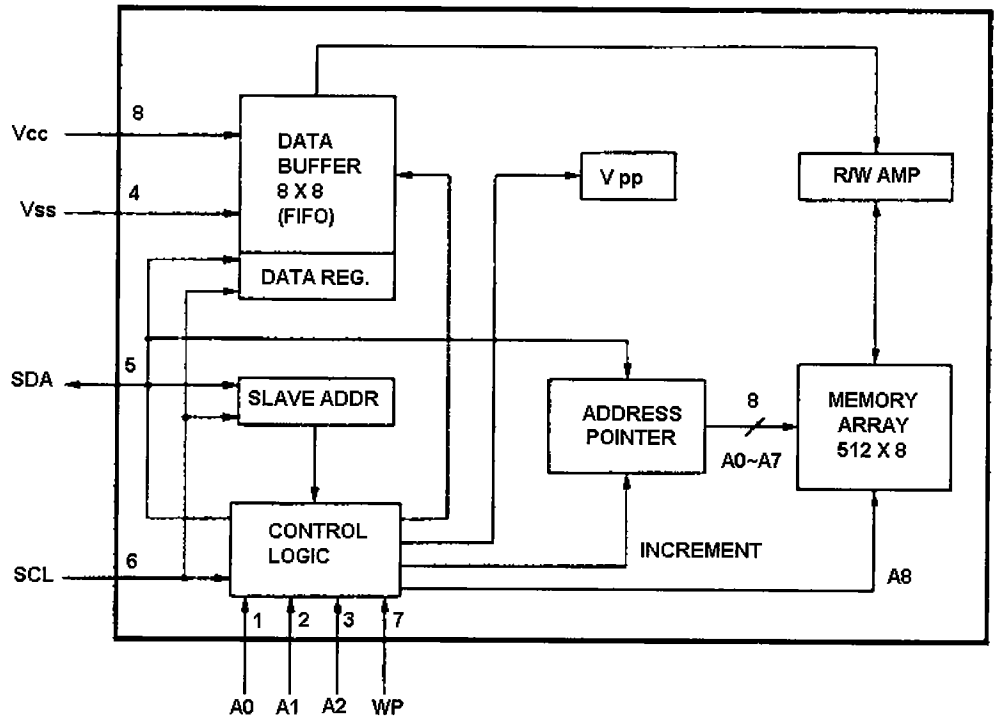

IC204 PA0057A

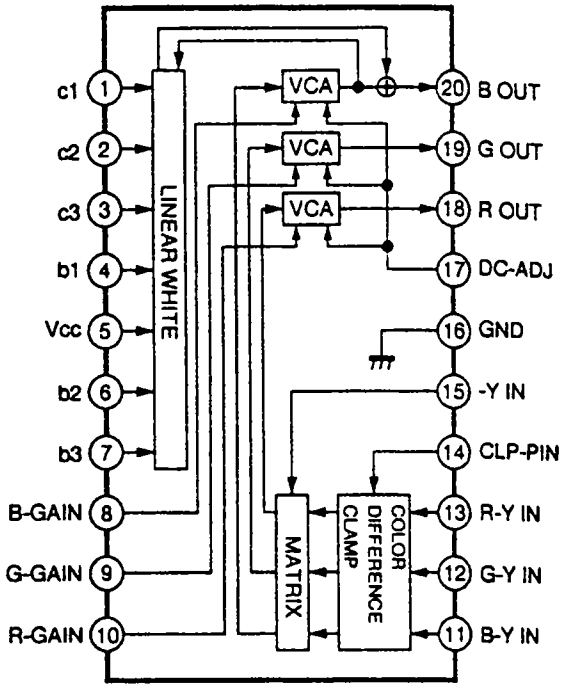

PCB-A/V

IC2001 T90A13N

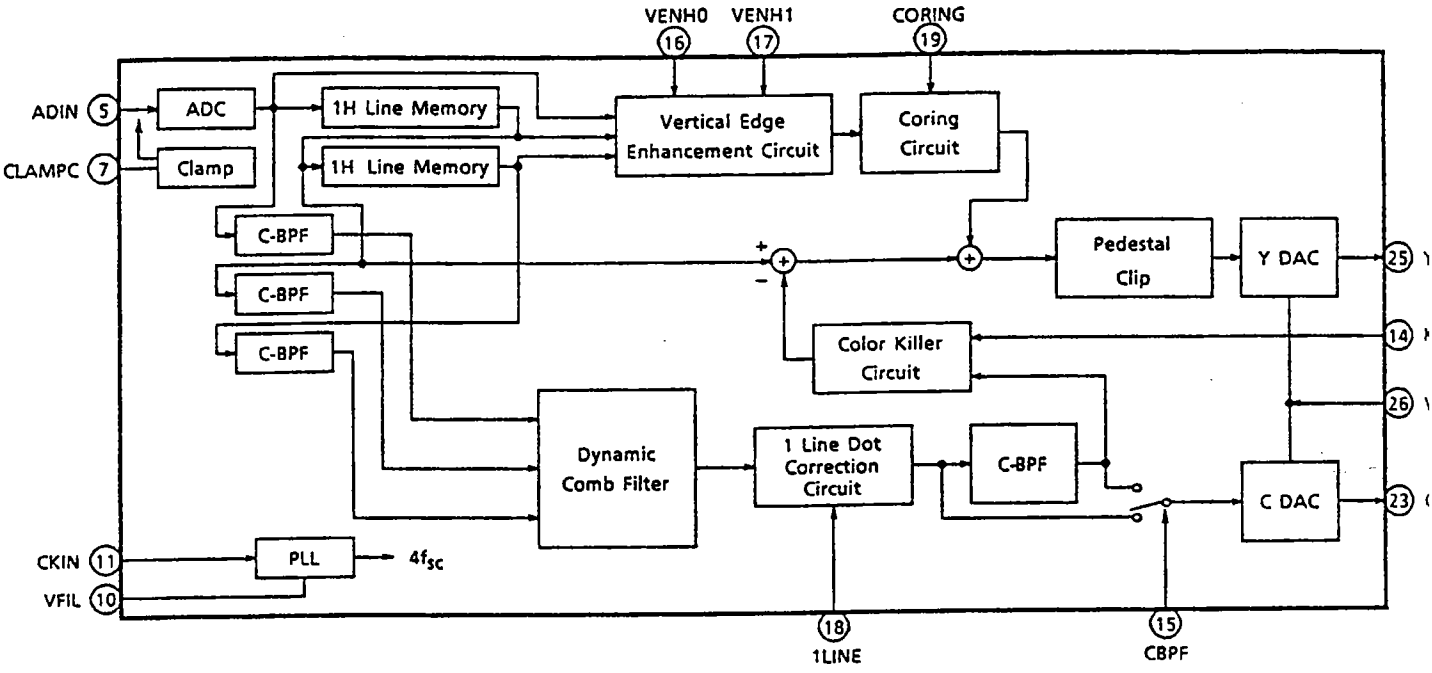

7601 CXA1855S

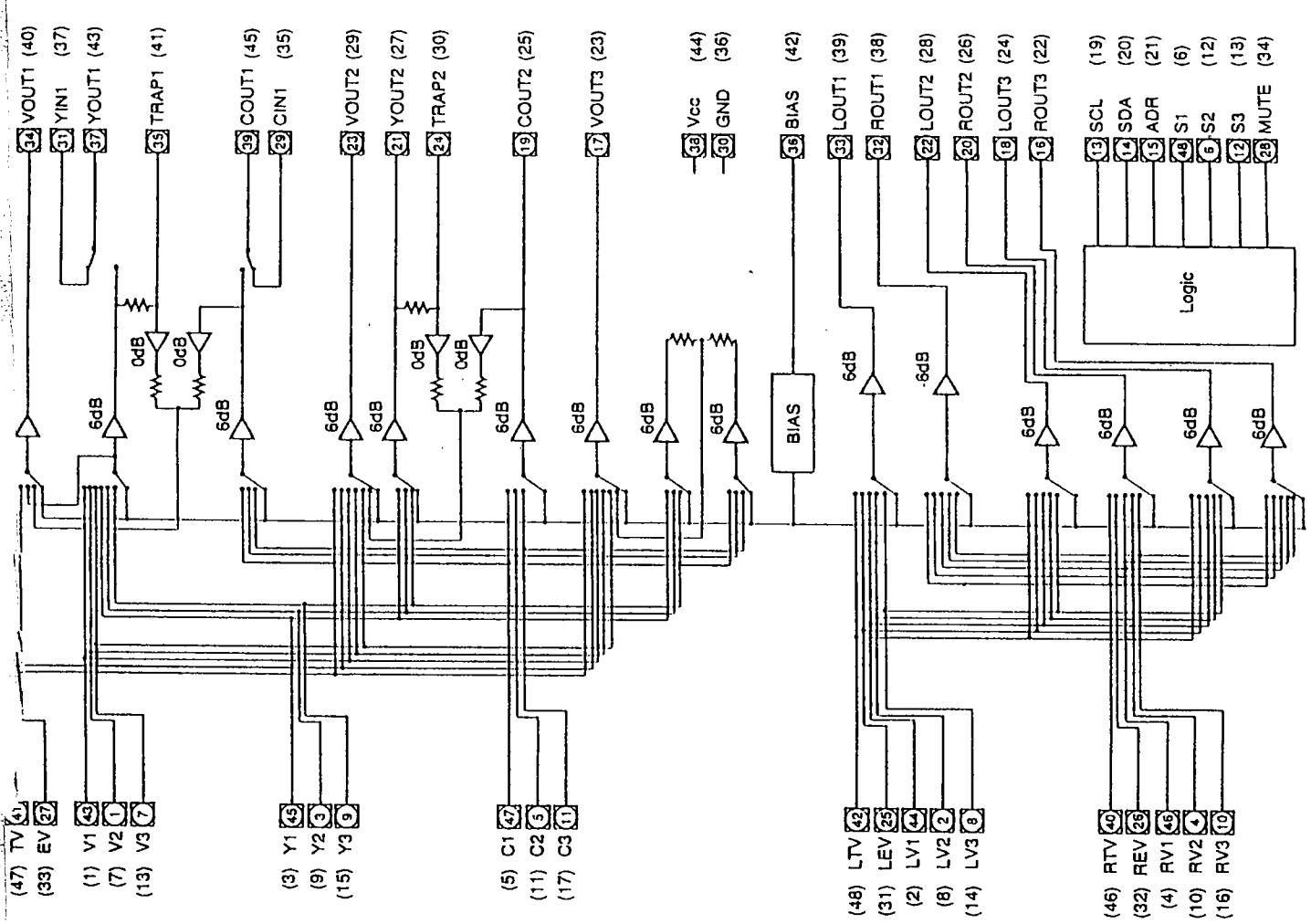

PCB-MAIN

IC401 LA7845

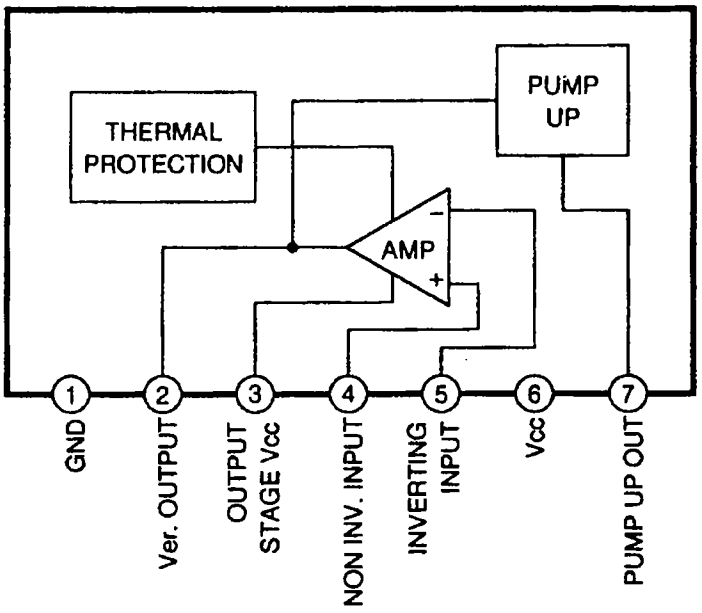

PCB-CONVERGENCE

IC800 M52336AS

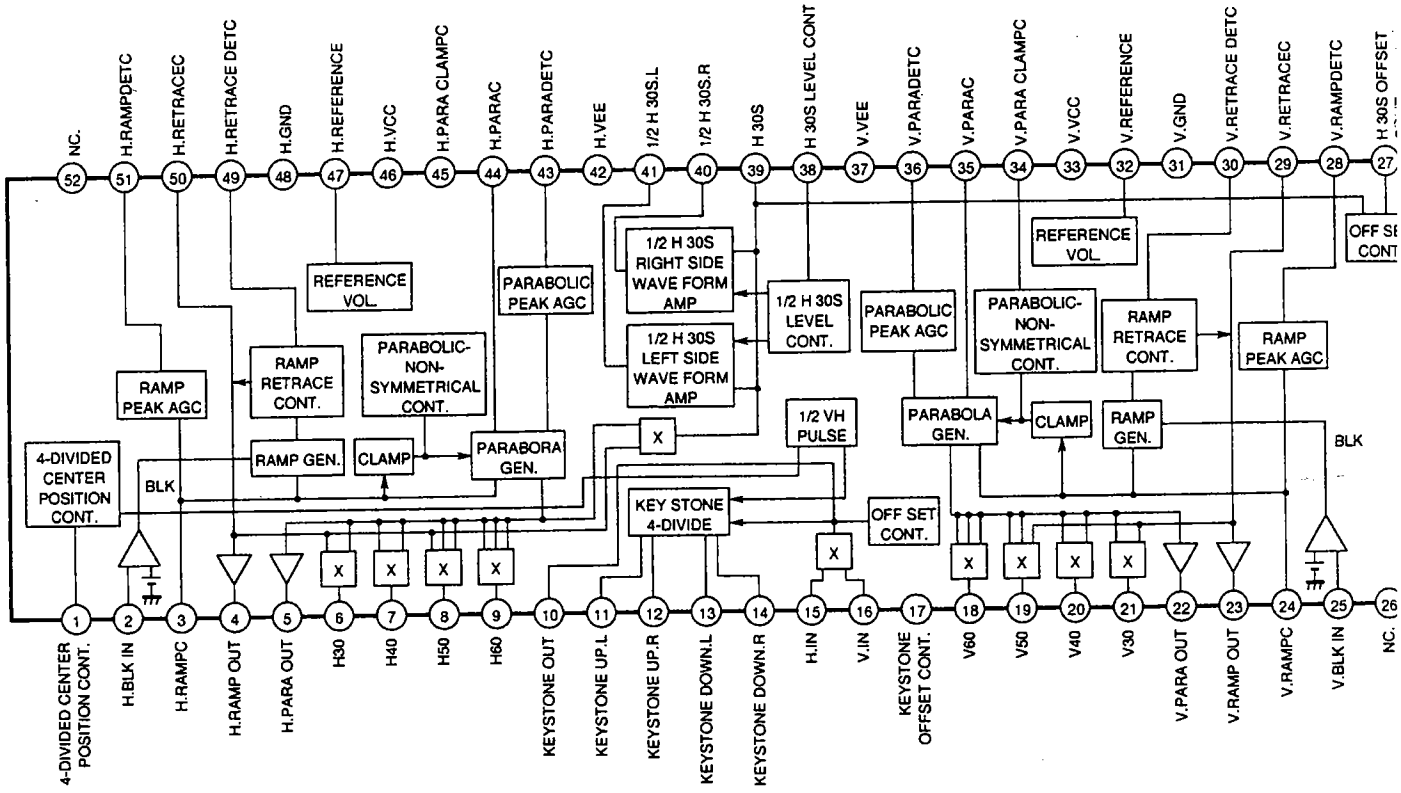

D00 CM0001AS

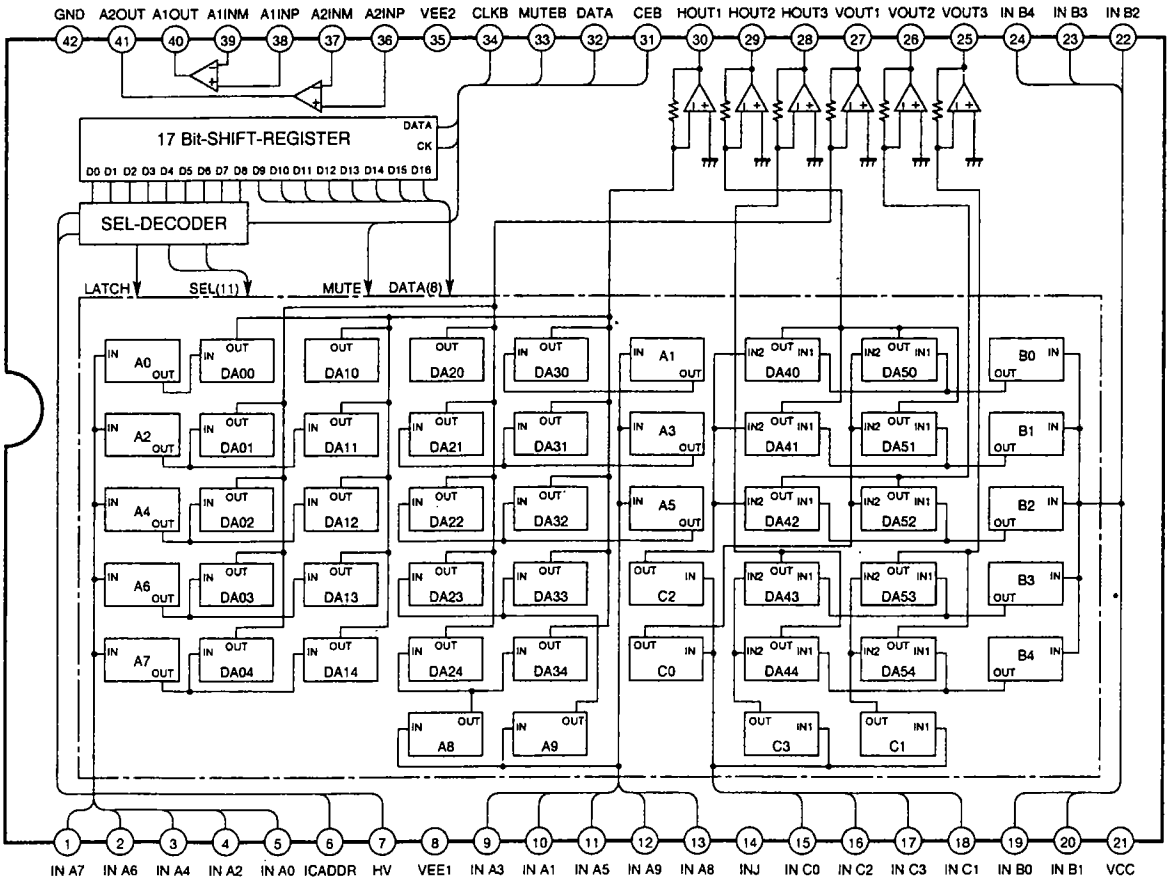

D0 PM0002B

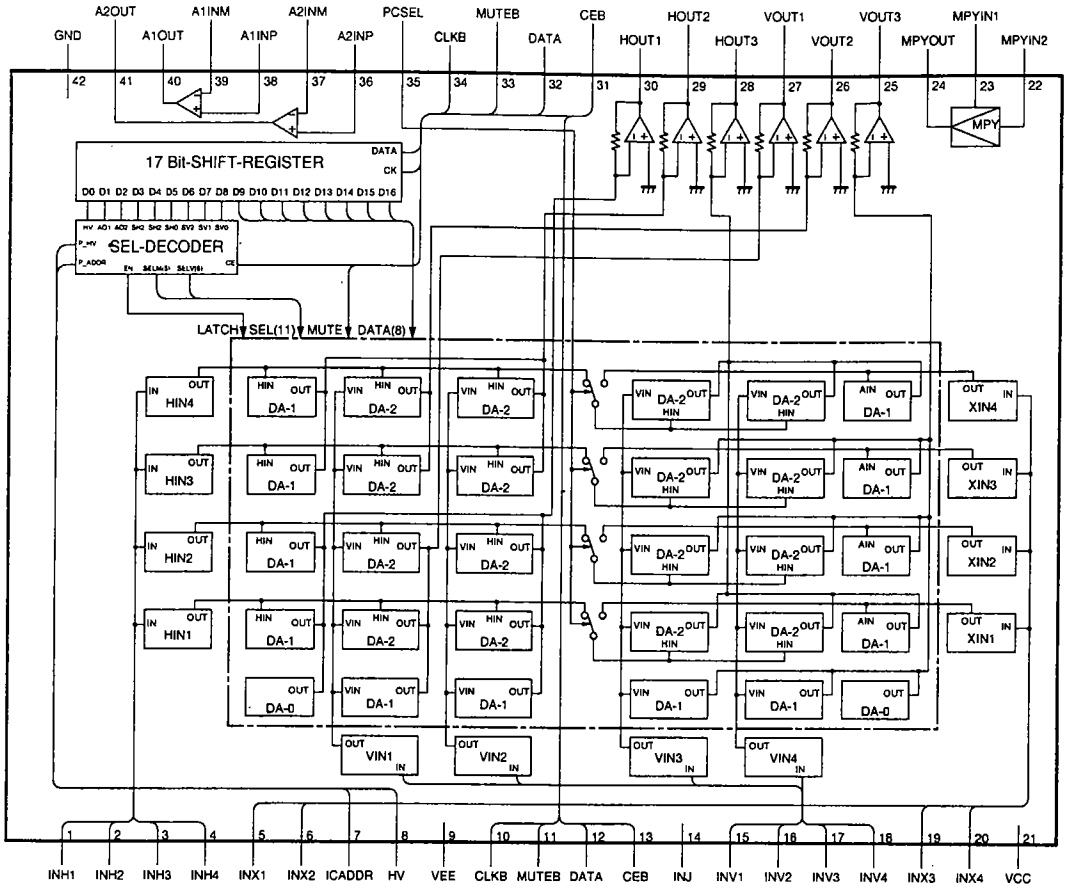

PCB-PIP

IC7001 M65617SP-A

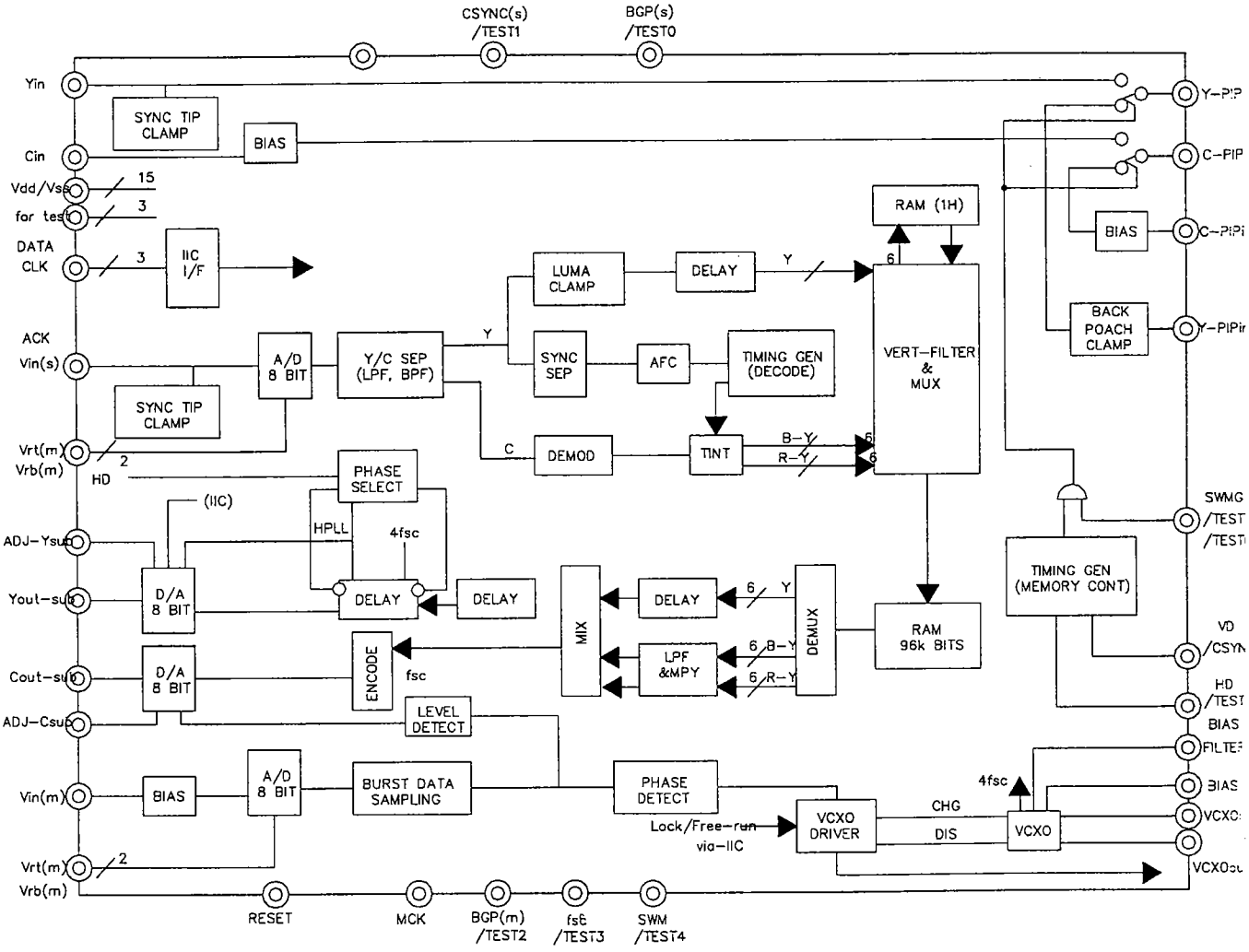

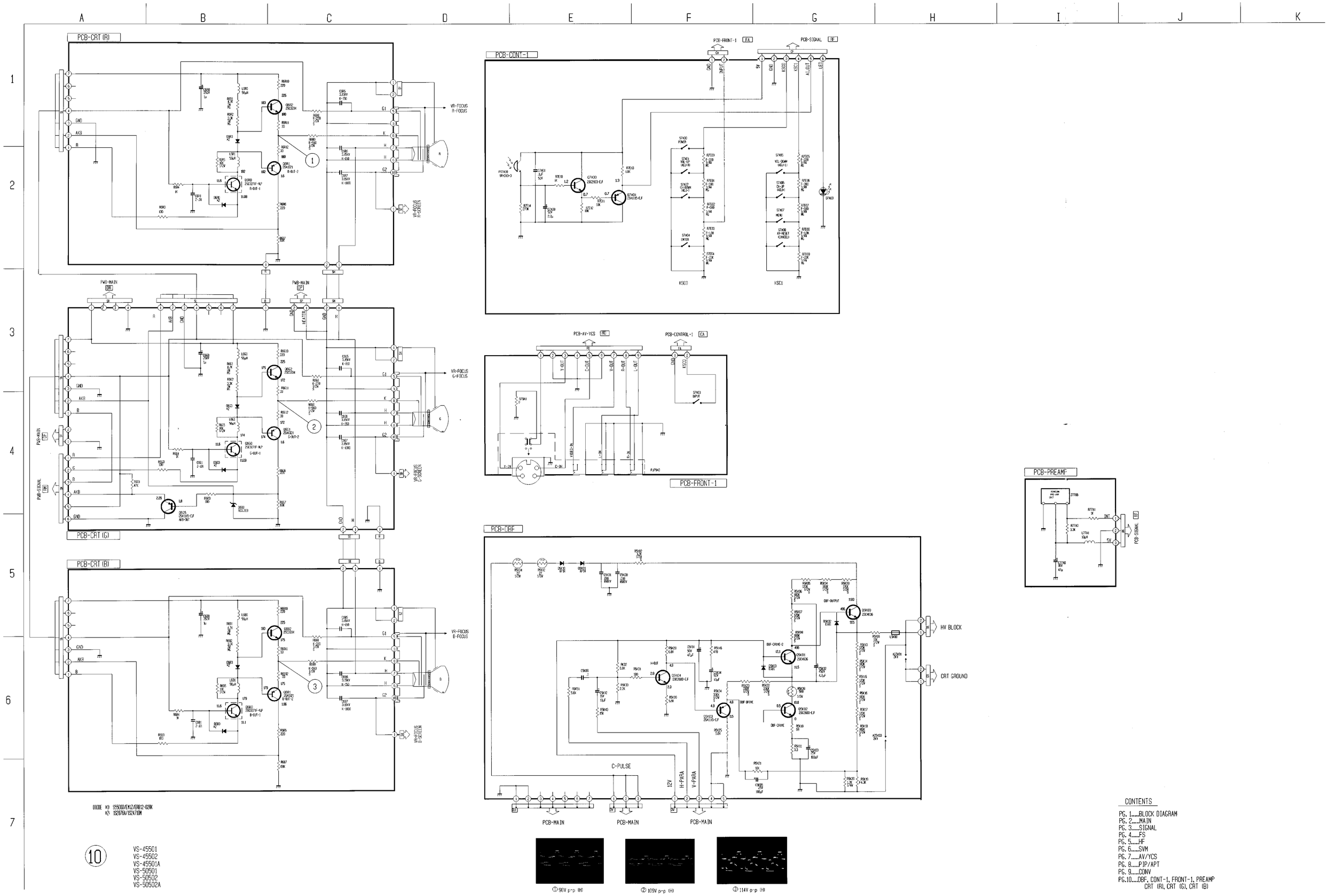

CONTENTS

PG. 1.....BLOCK DIAGRAM
PG. 2.....MAIN
PG. 3.....SIGNAL
PG. 4.....FS
PG. 5.....HF
PG. 6.....SVM
PG. 7.....AV/YCS
PG. 8.....PIP/APT
PG. 9.....CONV
PG.10.....DBF, CONT-1, FRONT-1, PREAMP
CRT (R), CRT (G), CRT (B)

PCB-HF

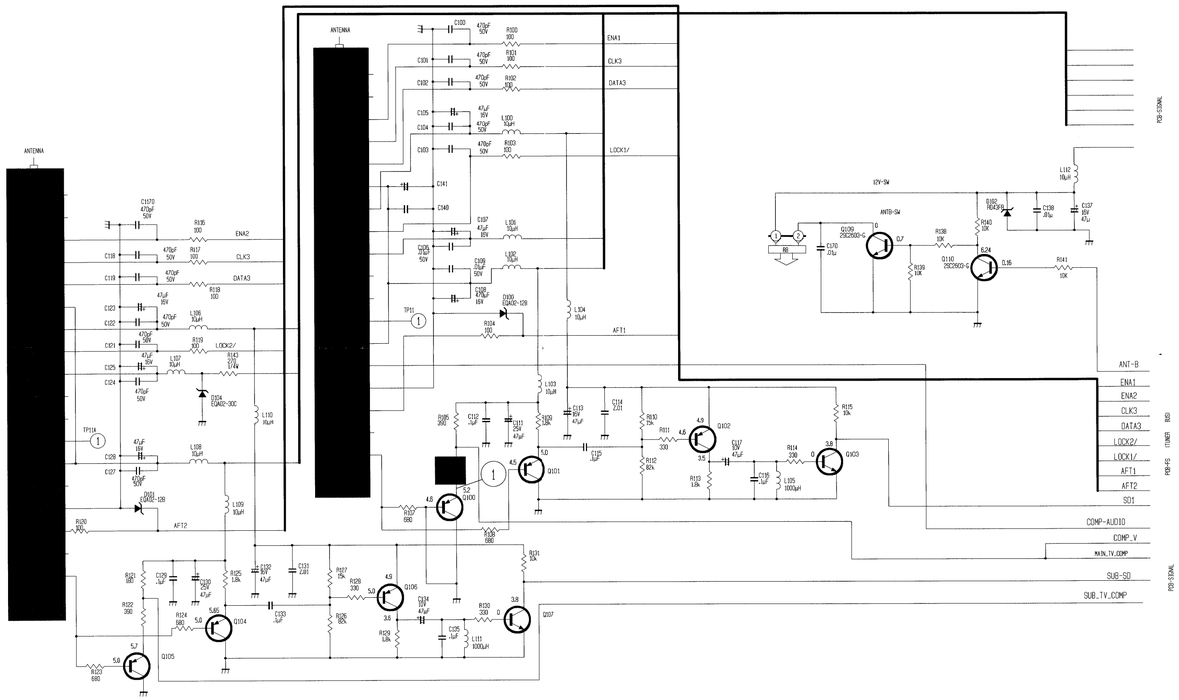

① 1.5V p-p (H)

CONTENTS

PG.1.....BLOCK DIAGRAM
PG.2.....MAIN
PG.3.....SIGNAL
PG.4.....FS
PG.5.....HF
PG.6.....SVM
PG.7.....AV/YCS
PG.8.....PIP/APT
PG.9.....CONV
PG.10....DBF, CONT-1, FRONT-1, PREAMP
CRT (R), CRT (G), CRT (B)

VS-45501
VS-45502
VS-45501A
VS-50501
VS-50502
VS-50502A

PCB-SVM

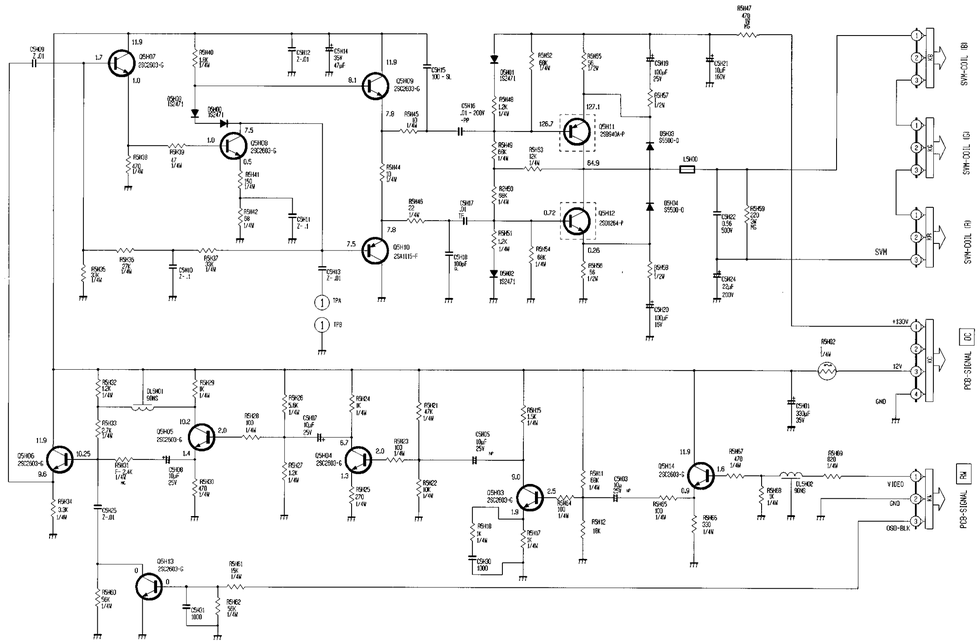

CONTENTS

PG. 1.....BLOCK DIAGRAM
PG. 2.....MAIN
PG. 3.....SIGNAL
PG. 4.....FS
PG. 5.....RF
PG. 6.....SVM
PG. 7.....AV/YCS
PG. 8.....PIP/APT
PG. 9.....CONV
PG.10.....DEF, CONT-1, FRONT-1, PREAMP
CRT (R), CRT (G), CRT (B)

6 VS-45501
VS-45502
VS-45501A
VS-50501
VS-50502
VS-50502A

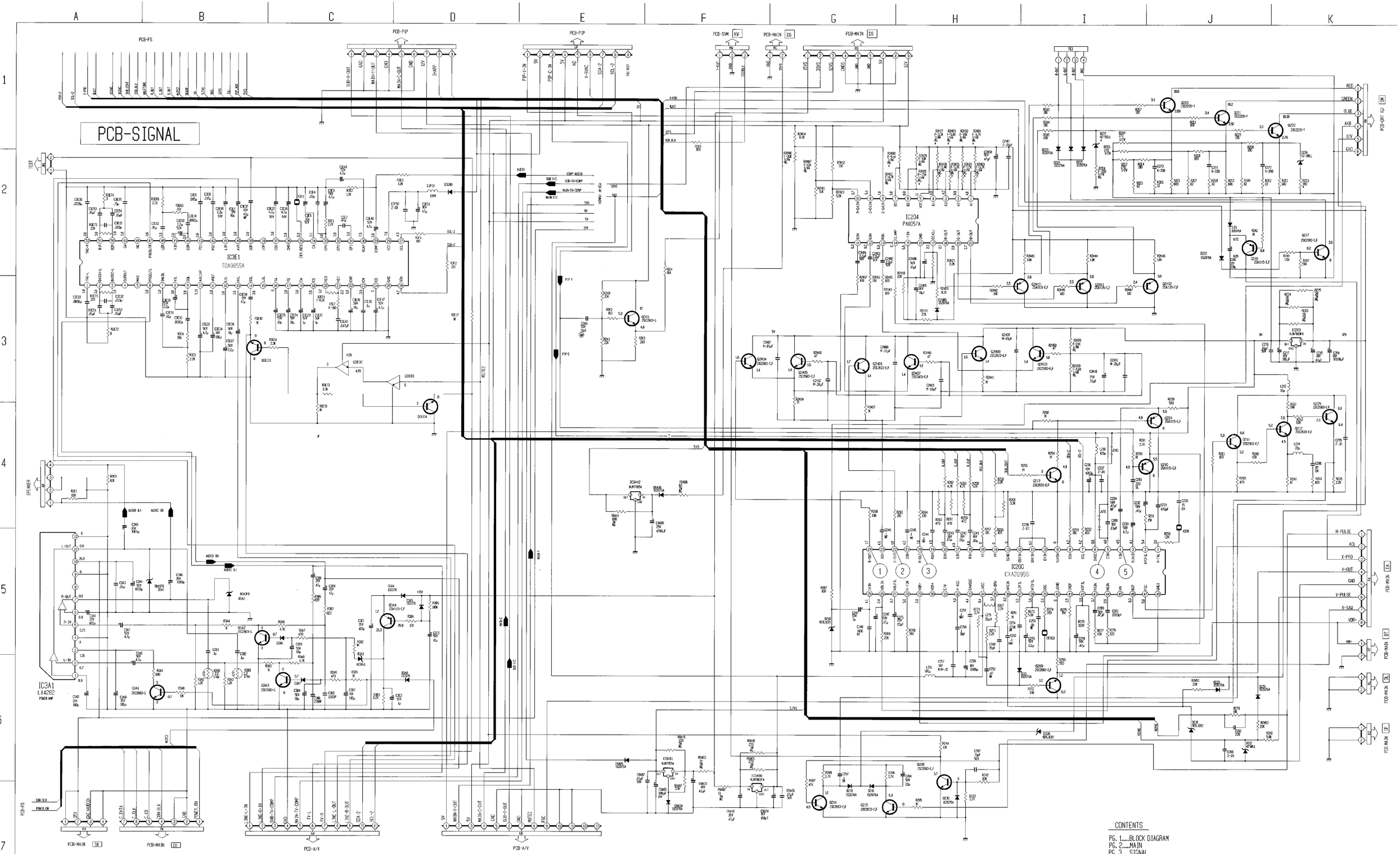

Reference Designator	Group--Value 1	2	3	4
R2C2	4.75ALL	4.75ALL	4.75ALL	4.75ALL
R2C3	3.0V-V	3.0V-V	3.0V-V	3.0V-V
R2H00	2V-V	2V-V	1.3V-V	3V-V
R2H01	2.7V-V	2.7V-V	4.7V-V	3.0V-V
R2H02	3.6V-V	3.6V-V	3.6V-V	3.6V-V
R2H03	9.1V-V	9.1V-V	5.6V-V	9.1V-V

Reference Designator	Group--Value 1	2	3	4
R2H24	1.6V-V	1.6V-V	1.5V-V	1.6V-V
R2H25	4.7V-V	4.7V-V	3.3V-V	4.7V-V
R2H26	2V-V	2V-V	2.4V-V	2.4V-V
R2H27	2.4V-V	2.4V-V	3.3V-V	3V-V
R2H28	1.6V-V	1.6V-V	1.5V-V	1.6V-V
R2H30	9.1V-V	9.1V-V	9.1V-V	9.1V-V

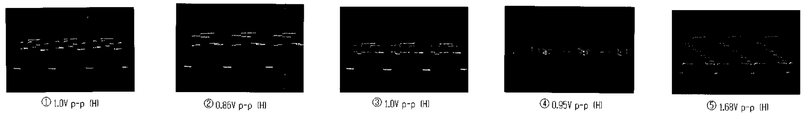

① 1.0V p-p (H) ② 0.85V p-p (H) ③ 1.0V p-p (H) ④ 0.95V p-p (H) ⑤ 1.68V p-p (H)

CONTENTS

PG. 1.....BLOCK DIAGRAM
PG. 2.....MAIN
PG. 3.....SIGNAL
PG. 4.....FS
PG. 5.....HF
PG. 6.....SVM
PG. 7.....AV/YCS
PG. 8.....PIP/APT
PG. 9.....CONV
PG.10....DBF, CONT-1, FRONT-1, PREAMP
CRT (R), CRT (G), CRT (B)

VS-45501
VS-45502
VS-45501A
VS-50501
VS-50502
VS-50502A

PCB-SIGNAL / FS

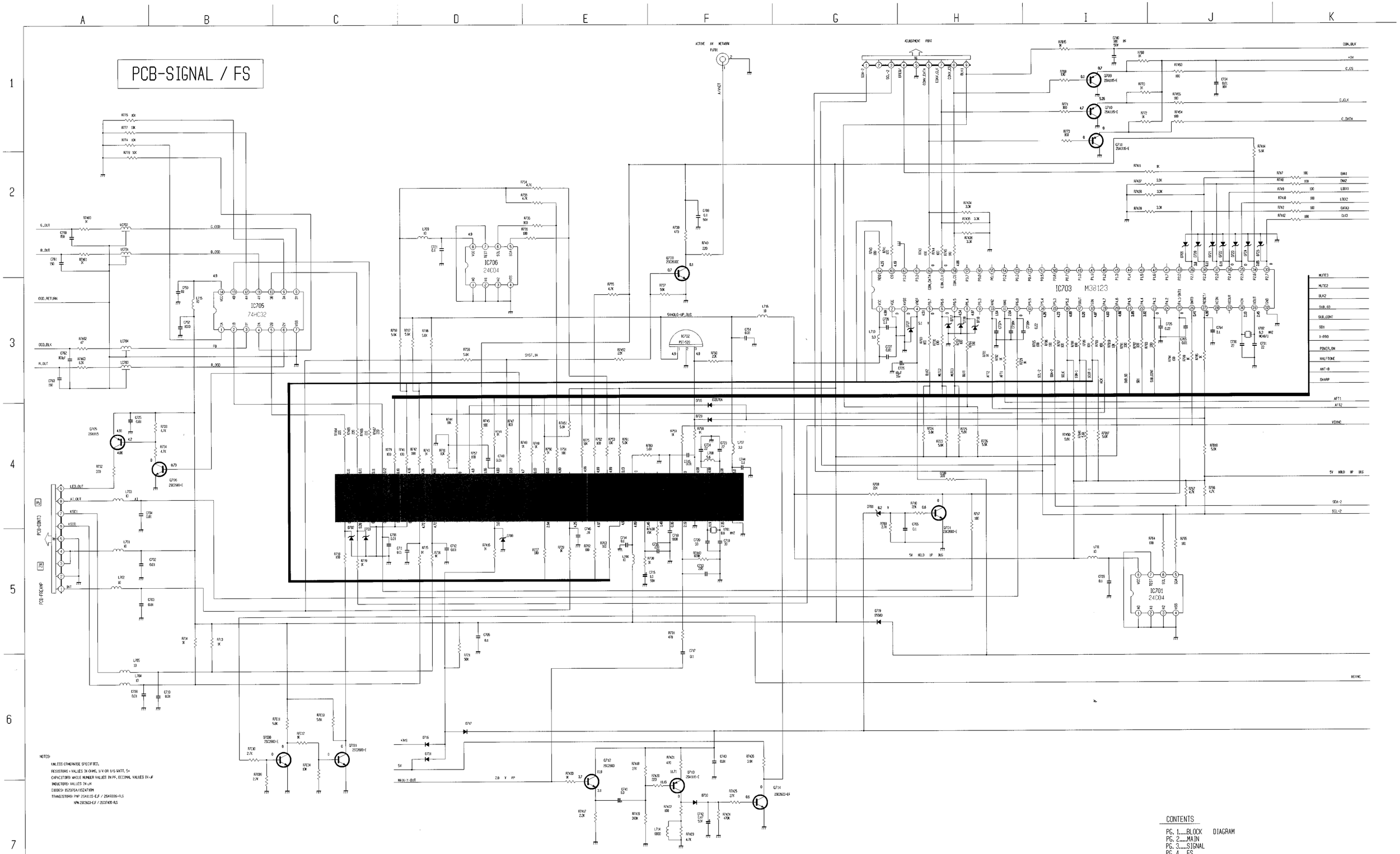

NOTES:

UNLESS OTHERWISE SPECIFIED,
RESISTORS : VALUES IN OHMS, 1/4 OR 1/6 WATT, 5%
CAPACITORS: WHOLE NUMBER VALUES IN PF, DECIMAL VALUES IN uF
INDUCTORS: VALUES IN uH
DIODES: 1S2076A/1S2471TM
TRANSISTORS: PNP 2SA1115-E,F / 2SA9338-R,S
NPN 2SC2603-E,F / 2SC3740-R,S

4

VS-45501
VS-45502
VS-45501A
VS-50501
VS-50502
VS-50502A

CONTENTS

PG. 1.....BLOCK DIAGRAM
PG. 2.....MAIN
PG. 3.....SIGNAL
PG. 4.....FS
PG. 5.....HF
PG. 6.....SVM
PG. 7.....AV/YCS
PG. 8.....PIP/APT
PG. 9.....CONV
PG.10.....DBF, CONT-1, FRONT-1, PREAMP
CRT (R), CRT (G), CRT (B)

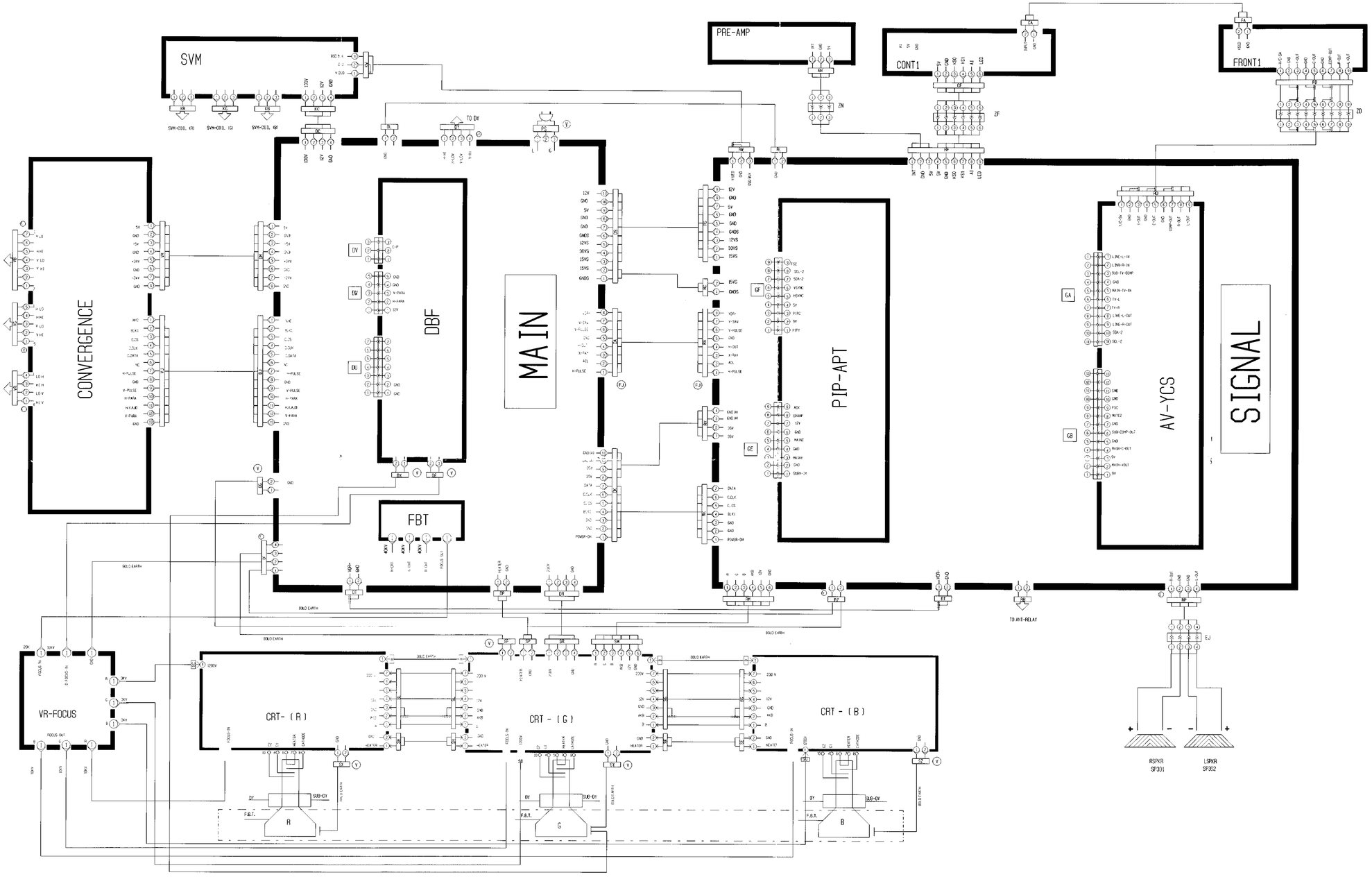

MODELS: VS-45501, VS-45502, VS-45502A
VS-50501, VS-50502, VS-50502A

NOTES

1. DC voltages were measured from points indicated to the circuit ground with a high-Z voltmeter.
2. Waveforms were taken with standard color bar signal
3. TP13, etc. show Test Points
4. CAPACITORS

Value	Not indicated		PF, for numbers more than 1 µF, for numbers less than 1
Dielectric Strength	Not indicated : 50V		
Tolerance	Not indicated = ± 10%		No tolerance is indicated for electrolytic capacitors and ± 20%
	G = ± 2%	P = + 100%	Q = + 30% C = ± 0.25PF
	J = ± 5%	- 0%	- 10% D = ± 0.5PF
	G = ± 10%	Z = + 80%	T = + 200% F = ± 1PF
	M = ± 20%	- 20%	- 0% G = ± 2PF
Type	I Parts except for chips		Not indicated: Ceramic capacitor (MF) : Polyester capacitor (PP) : Polypropylene film capacitor ALM : Aluminum electrolytic capacitor (TF) : Twin film capacitor (SC) : Semiconductor Ceramic capacitor (MP) : Metalized paper (MPF) : Metalized plastic film capacitor (MMF) : Metalized polyester capacitor (MF-PP) : Polyester polypropylene film capacitor PS : Styrol capacitor TAN or TANT : Tantalum capacitor : Electrolytic capacitor (NP) : Non polarized electrolytic capacitor
	II Chips		Not indicated : Ceramic capacitor chip : Electrolytic capacitor (NP) : Non polarized electrolytic capacitor chip
Characteristic (only ceramic capacitor)	Not indicated : F or B (high dielectric percentage) CH, SL, etc. : Temperature compensating types		

5. RESISTORS

Value			
Wattage	Parts except for chips	Not indicated = 1/4W or 1/6W	
	Chips	Not indicated = 1/10W	
Tolerance	Not indicated = ± 5%		
	D = ± 0.5%	J = ± 5%	
	F = ± 1%	K = ± 10%	
Type	I Parts except for chips		Not indicated: Carbon resistor (S) : Fixed composition resistor (MS) : Metal oxide film resistor (type B) (CC) : Cemented resistor W : Wire wound resistor M : Metal film resistor MPC : Metal plate cement resistor (ML) : Metal liner resistor
	II Chip		Not indicated = Chip resistor

6. This is a basic schematic diagram. Some sets may be subject to modification according to enginnering improvement.

SHADED COMPONENTS HAVE SPECIAL CHARACTERISTICS IMPORTANT TO SAFETY. BEFORE REPLACING ANY OF THESE COMPONENTS READ CAREFULLY THE PRODUCT SAFETY NOTICE IN THE SERVICE MANUAL.
DO NOT DEGRADE THE SAFETY OF THE RECEIVERS THROUGH IMPROPER SERVICING.

SERVICE TECHNICIAN WARNING
X--RADIATION PRECAUTION
THIS PRODUCT INCLUDES CRITICAL ELECTRICAL AND MECHANICAL PARTS ESSENTIAL FOR X--RADIATION PROTECTION.
TO AVOID POSSIBLE EXPOSURE TO X--RADIATION TAKE X--RADIATION PROTECTIVE MEASURES FOR PERSONNEL DURING SERVICING.
SEE SERVICE INSTRUCTIONS FOR SPECIFIED REPLACEMENT PARTS AND SERVICE ADJUSTMENTS.

CONTENTS

PG. 1.....BLOCK DIAGRAM
PG. 2.....MAIN
PG. 3.....SIGNAL
PG. 4.....PS
PG. 5.....HF
PG. 6.....SVM
PG. 7.....AV/YCS
PG. 8.....PIP/APT
PG. 9.....CONV
PG.10.....DBF, CONT-1, FRONT-1, PREAMP
CRT (R), CRT (G), CRT (B)

VS-45501
VS-45502
VS-45501A
VS-50501
VS-50502
VS-50502A

PCB-MAIN

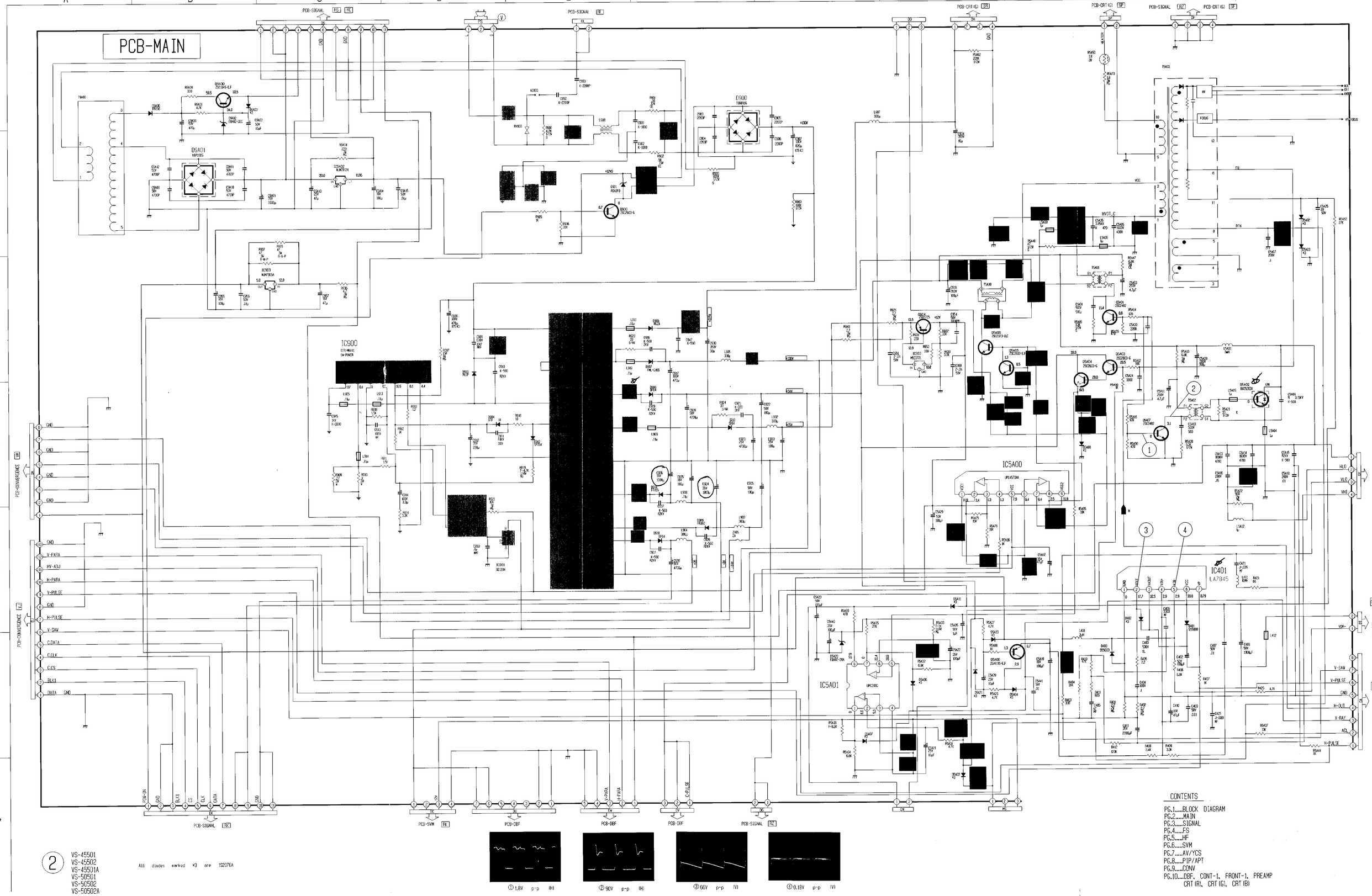

CONTENTS

PG.1.....BLOCK DIAGRAM
PG.2.....MAIN
PG.3.....SIGNAL
PG.4.....FS
PG.5.....HF
PG.6.....SVM
PG.7.....AV/YCS
PG.8.....PIP/APT
PG.9.....CONV
PG.10....DBF, CONT-1, FRONT-1, PREAMP
CRT (R), CRT (G), CRT (B)

2 VS-45501
VS-45502
VS-45501A
VS-50501
VS-50502
VS-50502A

All diodes marked ×3 are 1S2076A

① 1.8V p-p (H)

② 90V p-p (H)

③ 66V p-p (V)

④ 0.18V p-p (V)

PCB-AV/YCS

IC2001 TC9089AN

IC2002 MM1031XS

IC7601 CXA1955S

CONTENTS

PG. 1.....BLOCK DIAGRAM
PG. 2.....MAIN
PG. 3.....SIGNAL
PG. 4.....FS
PG. 5.....HF
PG. 6.....SVM
PG. 7.....AV/YCS
PG. 8.....PIP/APT
PG. 9.....CONV
PG.10.....DBF, CONT-1, FRONT-1, PREAMP
CRT (R), CRT (G), CRT (B)

① 2.0V p-p (H)

② 1.8V p-p (H)

③ 2.0V p-p (H)

④ 1.0V p-p (H)

⑤ 1.0V p-p (H)

VS-45501
VS-45502
VS-45501A
VS-50501
VS-50502
VS-50502A

PCB-PIP

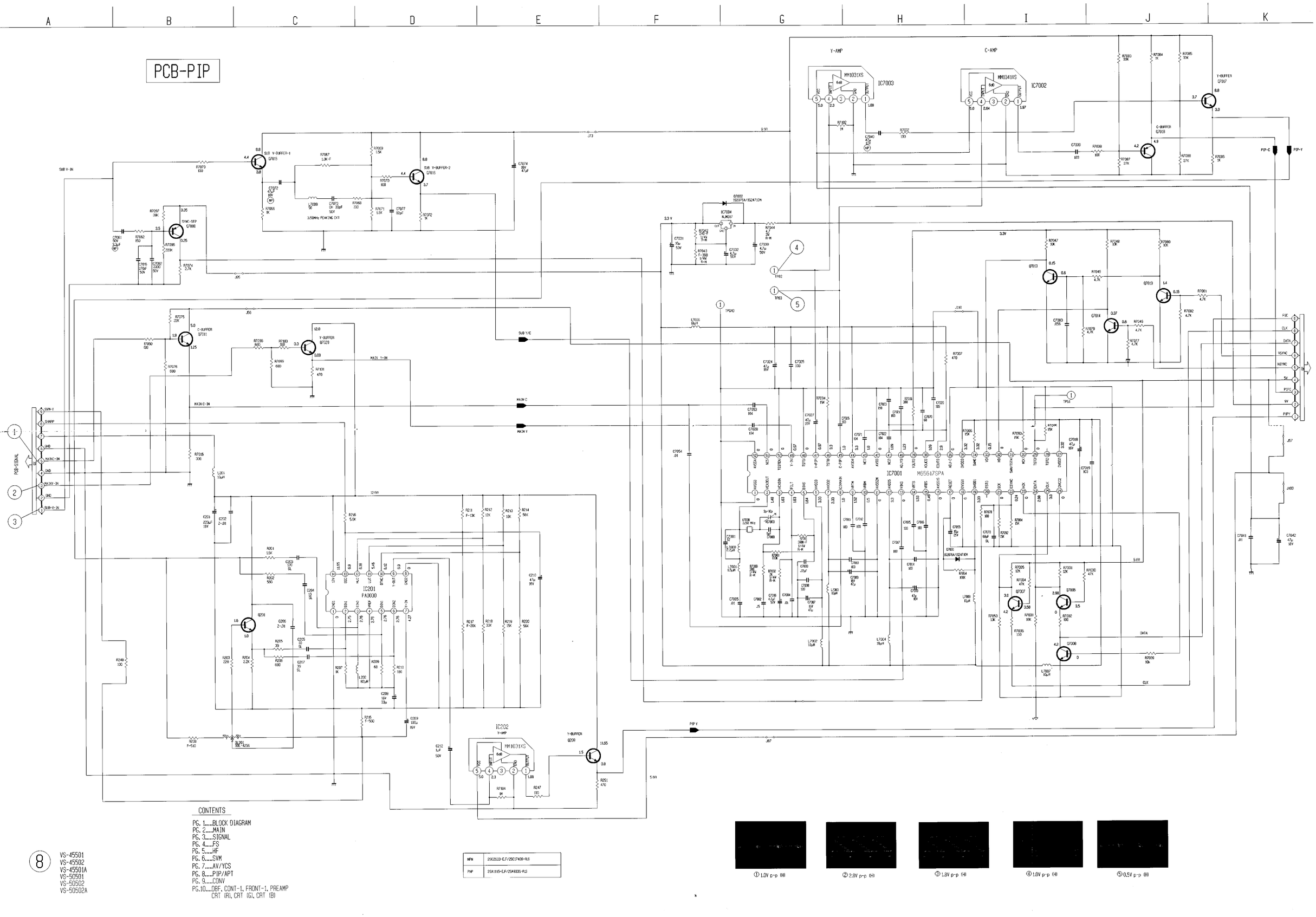

CONTENTS

PG. 1.....BLOCK DIAGRAM
PG. 2.....MAIN
PG. 3.....SIGNAL
PG. 4.....FS
PG. 5.....HF
PG. 6.....SVM
PG. 7.....AV/YCS
PG. 8.....PIP/APT
PG. 9.....CONV
PG.10.....DBF, CONT-1, FRONT-1, PREAMP
CRT (R), CRT (G), CRT (B)

NPN	2SC2603-E,F/2SC1740S-R,S
PNP	2SA1015-E,F/2SA933S-R,S

8 VS-45501
VS-45502
VS-45501A
VS-50501
VS-50502
VS-50502A

① 1.0V p-p (H)

② 2.8V p-p (H)

③ 1.8V p-p (H)

④ 1.0V p-p (H)

⑤ 0.5V p-p (H)

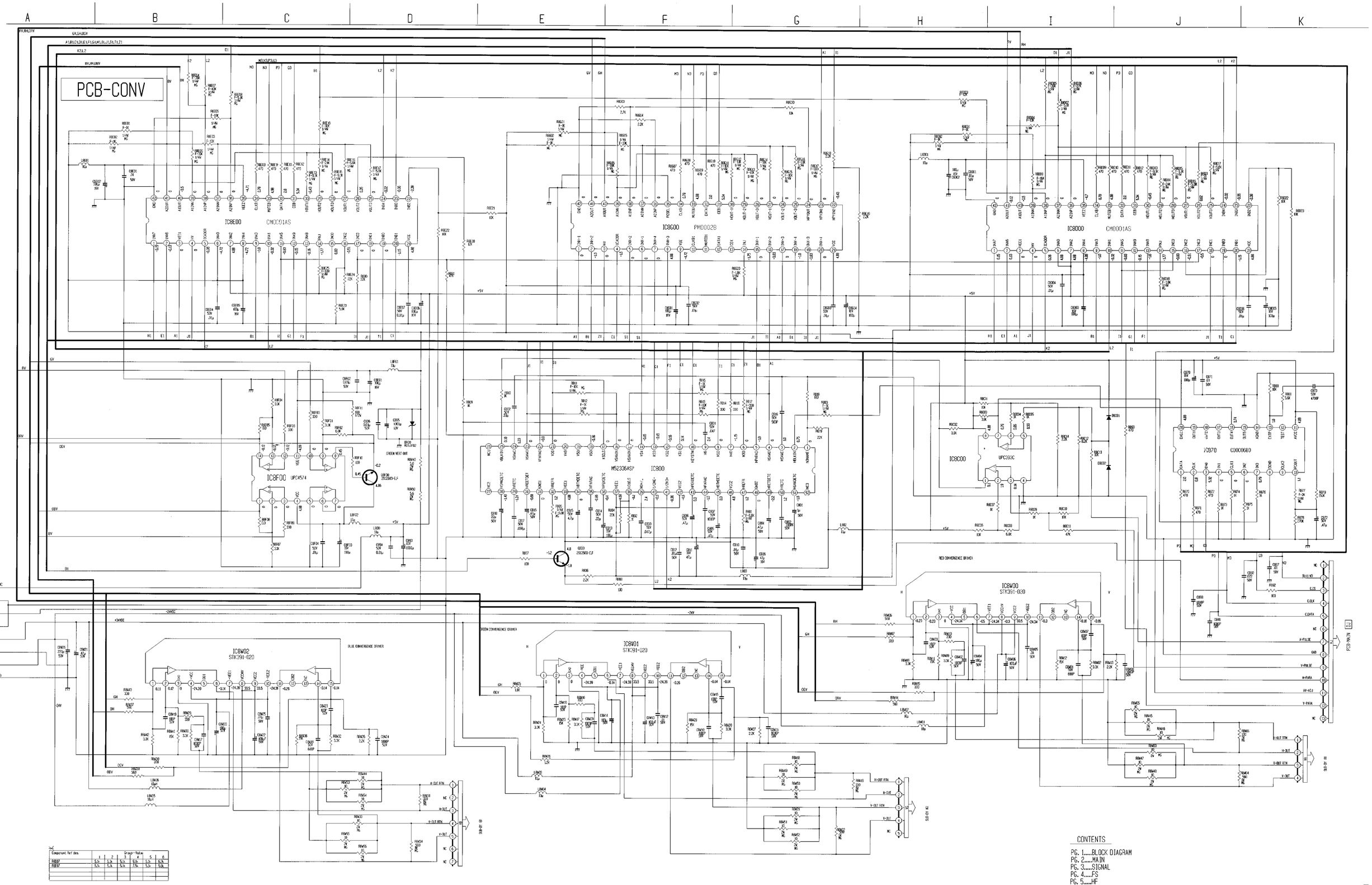

Component Ref des.	Group-Value					
	1	2	3	4	5	6
R8D87	5.1k	5.1k	5.1k	5.6k	5.1k	6.2k
R8E87	5.1k	5.1k	5.1k	7.5k	5.1k	5.6k

CONTENTS

PG. 1.....BLOCK DIAGRAM
PG. 2.....MAIN
PG. 3.....SIGNAL
PG. 4.....FS
PG. 5.....HF
PG. 6.....SVM
PG. 7.....AV/YCS
PG. 8.....PIP/APT
PG. 9.....CONV
PG.10....DBF, CONT-1, FRONT-1, PREAMP
CRT (R), CRT (G), CRT (B)

VS-45501
VS-45502
VS-45501A
VS-50501
VS-50502
VS-50502A