1994

MITSUBISHI Service Manual

VIDEO COPY PROCESSOR

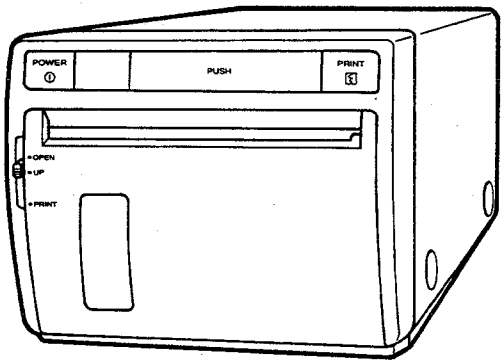

MODEL

P67E

※The HEAD LEVER on the FRONT PANEL should be at the "UP" position after servicing.
※Use a white CLEANING PAPER (Parts No. 857P003O40) or a HEAD CLEANING PEN (Parts No. 859C425O50) for cleaning of the THERMAL HEAD.
Do not use a russet CLEANING PAPER (Parts No. 857P001O10).
It may damage the THERMAL HEAD.

Before servicing this chassis, it is important that the serviceman reads the "SAFETY PRECAUTIONS" and "PRODUCT SAFETY NOTICE" in this service manual.

Specifications

●Power supply	AC220V ~240V 50Hz
●Power consumption	1.0A
●Input terminal	BNC contact plug (NTSC /PAL) video signal 1 Vp-p (75Ω)
●Output terminal	BNC contact Plug (NTSC /PAL) video signal 1 Vp-p (75Ω)
●Resolutions	Under Scan (Standard) (H)1216dots X (V)600line
●Gradations	256 gradations
●Printing time	Approx 5.8 sec. (PAL under scan)
●Operating conditions	Temperature 5℃~40℃ (41°F~104°F)
	Humidity 35%~80%RH (No dewing)
●Print size	100×75mm (Standerd)
●External Dimensions	154(W)×125(H)×314(D)mm 6" 4-15/16" 12-3/8"
●Weight	3.5kg(7.71lbs)

●Standard accessories

BNC/BNC connection cable (78-23/32")	1 piece
Wired remote controller	1 set
AC power cord	1 piece
Thermal paper K65HM	1 roll
Cleaning paper	1 sheet
Easy operation label	1 sheet

●Optional accessory
Thermal paper K65HM,K61S,K61B

MITSUBISHI ELECTRIC

Copyright © 1994 Mitsubishi Electric Corporation All Rights Reserved.

CONTENT

Pase

SAFETY PRECAUTIONS ····1

PRODUCT SAFETY NOTICE ····1

LEAD DRESSING ····2

DISASSEMBLY

Removal of CABINET ····3

Removal of DOOR ····3

Removal of FRONT PANEL ····4

Removal of PCB-MAIN ····5

Removal of PCB-POWER····5

Removal of PRINTER UNIT ····7

REPLACEMENT OF MECHANICAL PARTS

Replacement of STEP MOTOR ····8

Replacement of PLATEN ROLLER ····9

Replacement of PAPER HOLDER ····9

Replacement of THERMAL HEAD ····10

CLEANING METHOD

Cleaning of THERMAL HEAD ····12

Cleaning of PLATEN ROLLER ····13

PRINTED CIRCUIT BOARDS LOCATION ····14

ADJUSTMENT POINTS ····15

SERVICE MODE ····16

Pase

ADJUSTMENT MODE ····18

CHECK OF DETECTION LEVEL FOR HEAD POSITION AND PAPER ····19

INITIALIZATION OF E²PROM ····20

INITIAL SETTING ····21

1. Rough adjustment of power voltage ···22

2. Main voltage/Head voltage····22

3. Vertical Sync Separation ····25

4. Horizontal Sync Pulse Width ····25

5. Horizontal AFC····26

6. Horizontal position ····27

7. Clock frequency ····28

8. SUB-BRIGHT/SUB-CONTRAST ····29

CHIP PARTS REPLACEMENT····30

PARTS LIST ····31

PACKING PARTS ····36

EXPLODED VIEW

BLOCK DIAGRAM

SCHEMATIC DIAGRAM

SAFETY PRECAUTIONS

CAUTION : Observe all cautions and safety related notes located inside the cabinet and on the chassis.

LEAKAGE CURRENT CHECK

Before returning the UNIT to the customer, it is recommended that leakage current be measured according to the following methods.

1. Cold Check

With the AC plug removed from the AC source, place a jumper across the two AC plug prongs. Turn the receiver AC switch on. Using an ohm-meter, connect one lead to the jumpered AC plug and touch the other lead to each exposed metal part (screwheads, metal overlays, etc.), particularly any exposed metal part having a return path to the chassis. Exposed metal parts having a return path to the chassis should have a minimum resistance reading of 1 megohm. Any resistance below this value indicates an abnormality which requires corrective action. Exposed metal parts not having a return path to the chassis will indicate an open circuit.

2. Hot Check

The test sequence, with reference to the measuring circuit in Fig. A, is as follows:

(1) With switch S1 open, connect the unit to the measuring circuit. Immediately after connection, measure leakage current, using both positions of switch S2, and with the switching devices in the unit in all of their operating positions.

(2) Close switch S1, energizing the receiver, immediately after closing the switch, measure leakage current, using both positions of switch S2, and with the switching devices in the receiver in all of their operating positions.
Repeat measurements of items (1) and (2) after the receiver has reached thermal stabilization.
The leakage current must not be more than 0.5 milliampere.

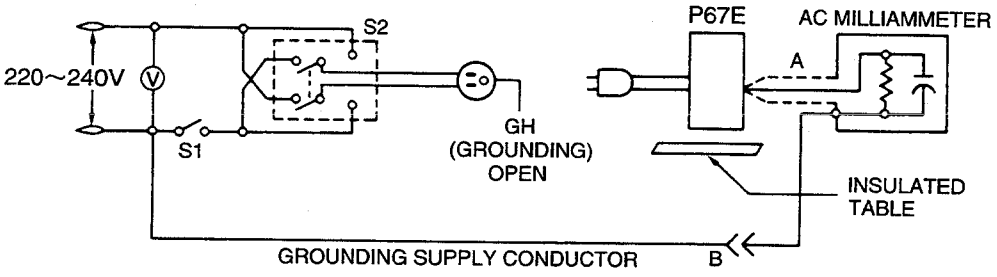

Fig. A

PRODUCT SAFETY NOTICE

Many electrical and mechanical parts in the video copy processor have special safety related characteristics. These characteristics are often not evident from visual inspection nor can the protection afforded by them necessarily be obtained by using replacement components rated for higher voltage, wattage, etc. Replacement parts which have these special safety characteristics are identified in this service manual. Electrical components having such features are identified by shading on the schematic diagram and the parts list of this service manual, and by marking on the supplementary sheet for this chassis to be issued subsequently.
Therefore replacements for any safety parts should be identical in value and characteristics.

LEAD DRESSING

The lead wires to be clamped are listed in the table below.

NOTE: The inner wires are clamped so that they do not come close to heat generating or high voltage components After servicing route all wires in their original position.

※Reverse printed character indicates aerial clamp.

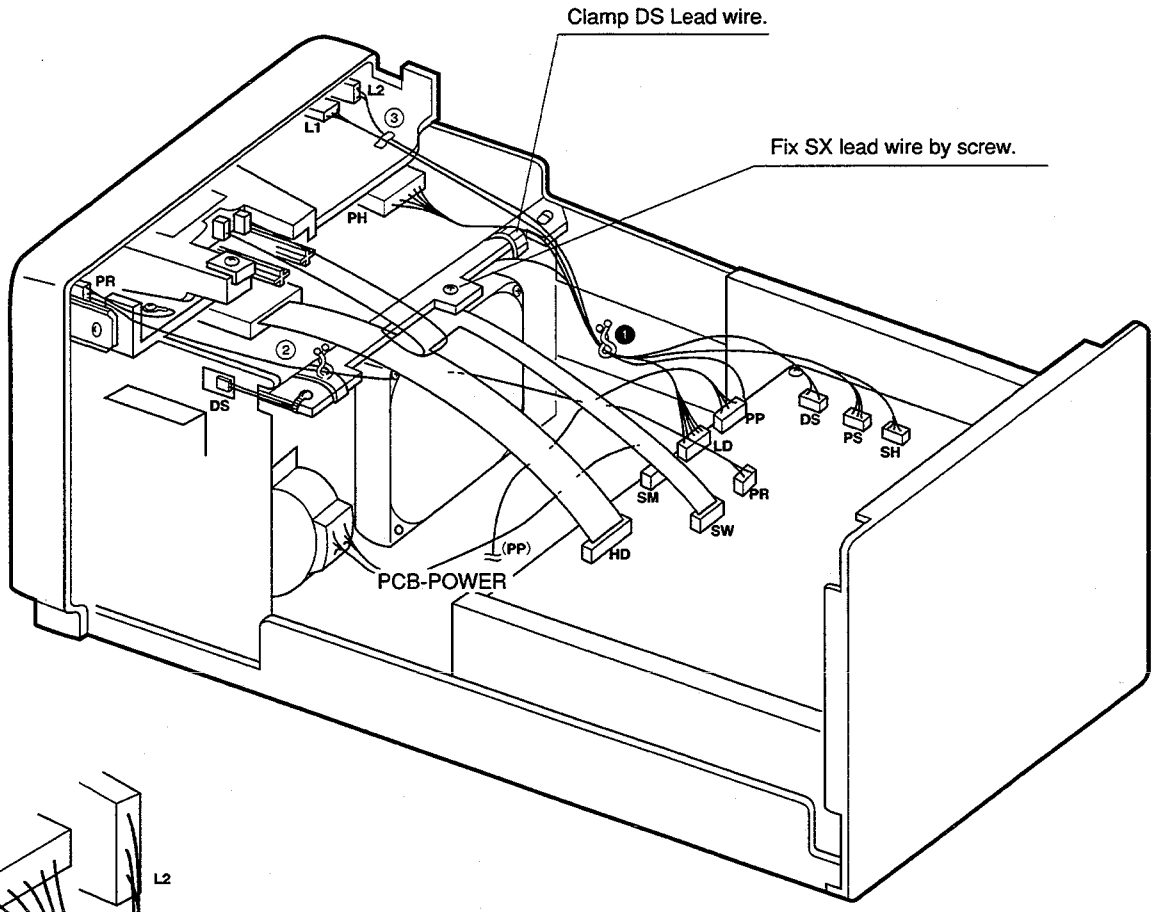

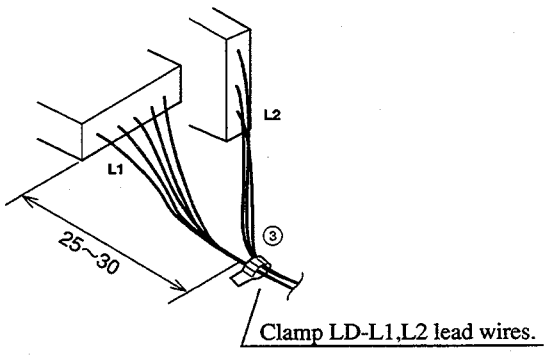

Lead Wire	Clamp
L1-LD	❶–③
L2-LD	❶–③
PS	❶
SH	❶
DS	❶
PR	②

DISASSEMLBLY

Removal of CABINET

1. Remove the 4 screws securing the CABINET. (Fig.1-1)
2. Slide the cabinet slightly to the rear and remove it.

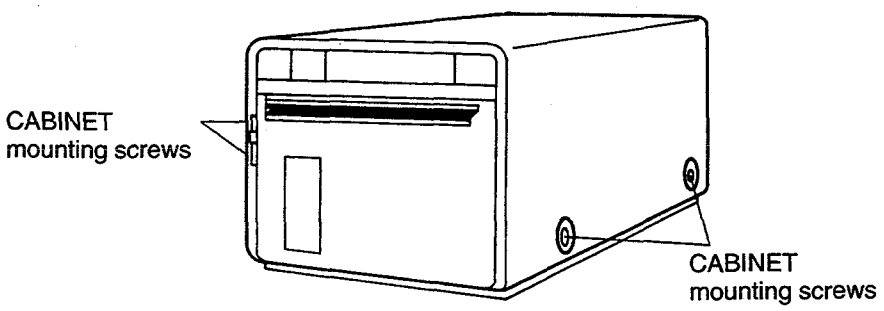

Fig.1-1

Removal of DOOR

1. Set the knob to "OPEN" and open the DOOR.
2. Remove the CAPS. (Fig 1-2)
3. Remove the 2 snaps using a driver. (Fig.1-2)
4. Raise the PAPER HOLDER slightly and remove the DOOR. (Fig.1-3)
5. For re-assembly, reverse the procedure.

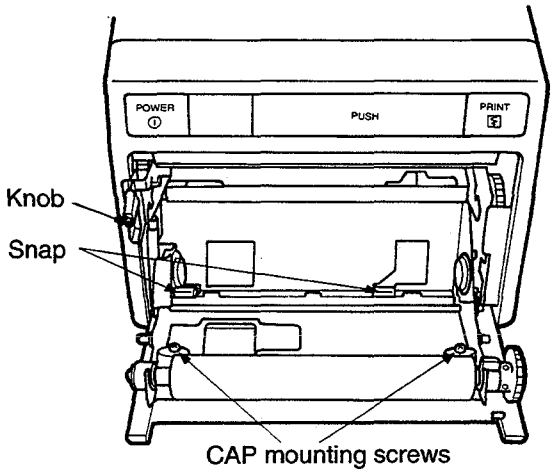

Fig.1-2

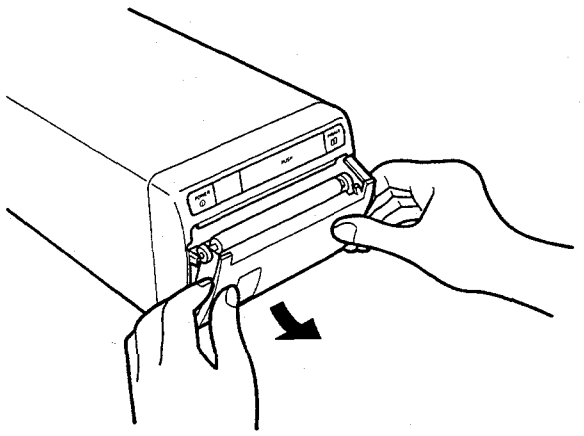

Fig.1-3

Removal of the FRONT PANEL

1. Remove the CABINET. (Fig.1-1)
2. Remove the DOOR. (Fig.1-2,1-3)
3. Disconnect the CONNECTORS LD, PR, SW connected to PCB-MAIN.
4. Remove the MEMBRANE SWITCH mounting screw connected to the fan bracket. (Fig.1-4)
5. Remove 4 screws securing the FRONT PANEL. (Fig.1-5)
6. Remove the KNOB. (Fig.1-5)
7. Remove the FRONT PANEL
8. For re-assembly, reverse the procedure.

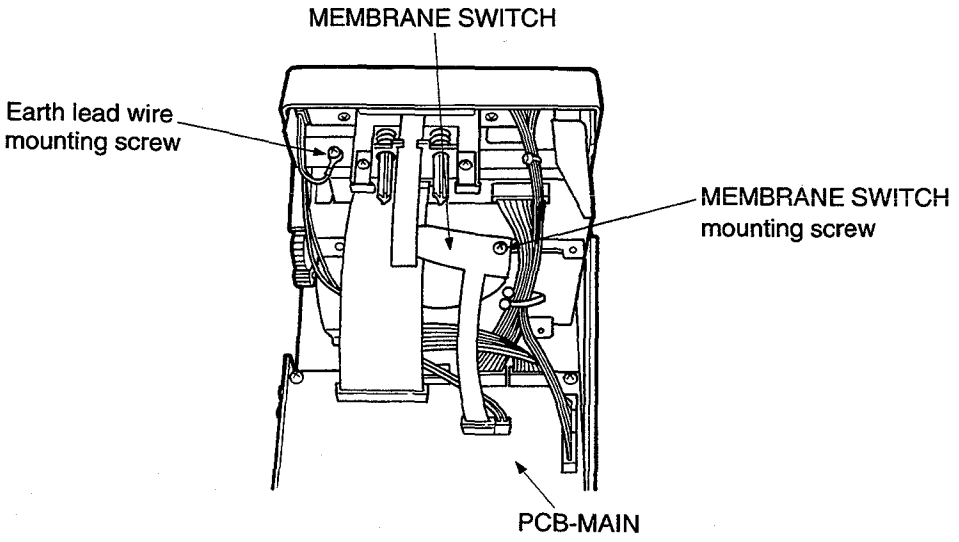

Fig. 1-4

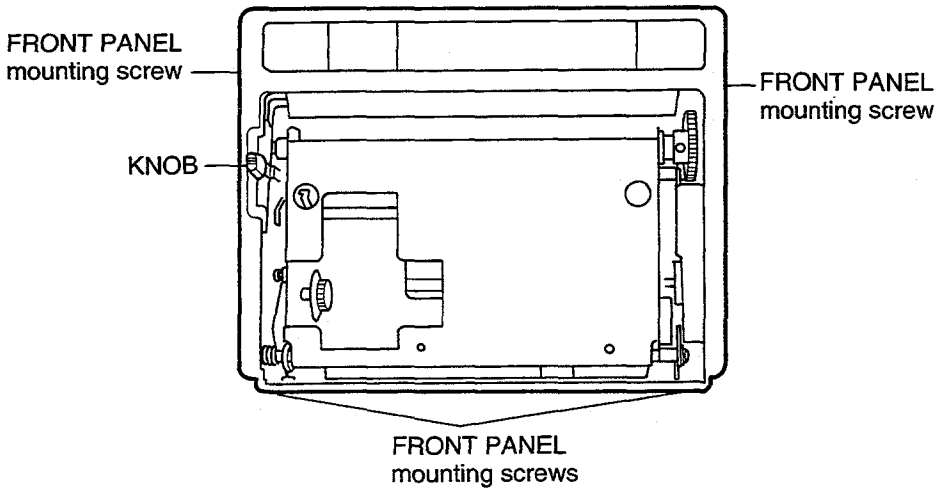

Fig. 1-5

Removal of PCB-MAIN	1. Remove the CABINET.(Fig.1-1) 2. Disconnect all the connectors to the PCB-MAIN. 3. Remove the 4 screws securing the PCB-MAIN. (Fig.1-6) 4. For re-assembly, reverse the procedure. 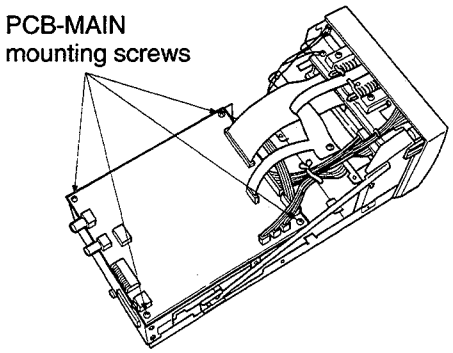 **Fig.1-6**
Removal of PCB-POWER	1. Remove the CABINET.(Fig.1-1) 2. Remove the 2 screws securing the POWER SWITCH BRACKET. (Fig.1-8) 3. Remove the POWER SWITCH BRACKET.(Fig.1-8) 4. Remove the REAR PANEL.(Fig.1-7) 5. Remove the PCB-POWER.(Fig.1-6) 6. Remove the TOP HOLDER.(Fig.1-9) 7. Remove the 1 screw securing the POWER UNIT, remove POWER UNIT.(Fig.1-9) 8. Remove the 5 screws securing the HEAT SINK of D951,Q952,IC971, IC901 on POWER UNIT , remove the HEAT SINK.(Fig.1-10) 9. Disconnect all the connectors coonnected to PCB-POWER. 10. Remove the 4 screws securing the PCB-POWER. (Fig.1-10) 11. Remove the PCB-POWER from POWER UNIT. 12. For re-assembly, reveres the procedure. 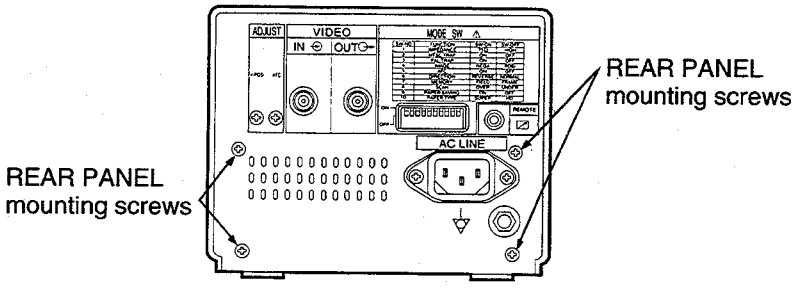 **Fig.1-7**

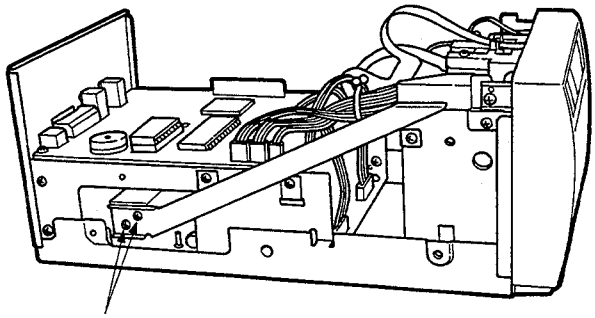

Fig.1-8

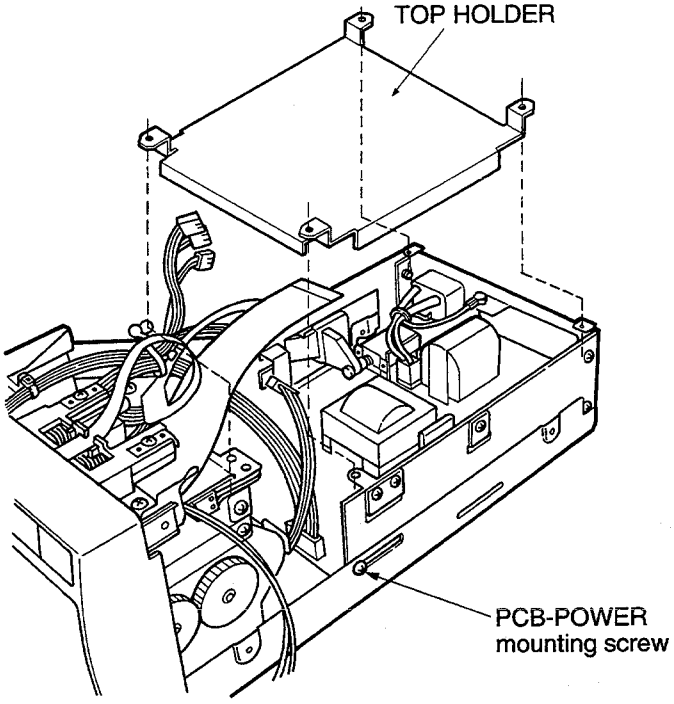

Fig.1-9

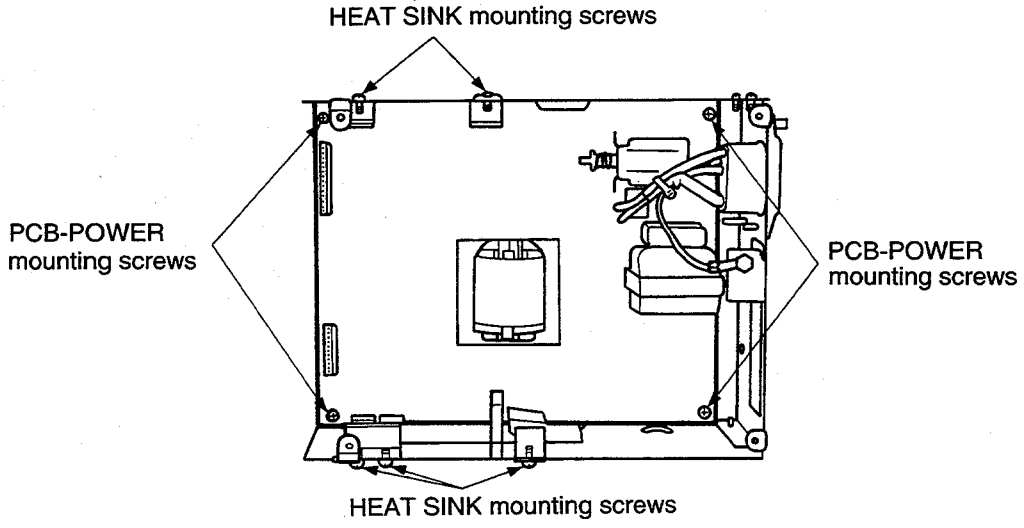

Fig.1-10

Removal of PRINTER UNIT	1. Remove the CABINET.(Fig.1-1) 2. Remove the DOOR. (Fig.1-2,1-3) 3. Remove the FRONT PANEL. (Fig.1-4,1-5) 4. Remove the 2 screws securing the POWER SWITCH BRACKET. (Fig.1-8) 5. Remove the POWER SWITCH BRACKET. (Fig.1-8) 6. Disconnect all the connectors coonnected to PRINTER UNIT. 7. Disconnect connectors PS , DS , SH , LD , SM , HD , SW connected to PCB-MAIN. 8. Remove the 2 screws securing the PRINTER UNIT. (Fig.1-11) 9. Remove the PRINTER UNIT. 10. For re-assembly, reveres the procedure.

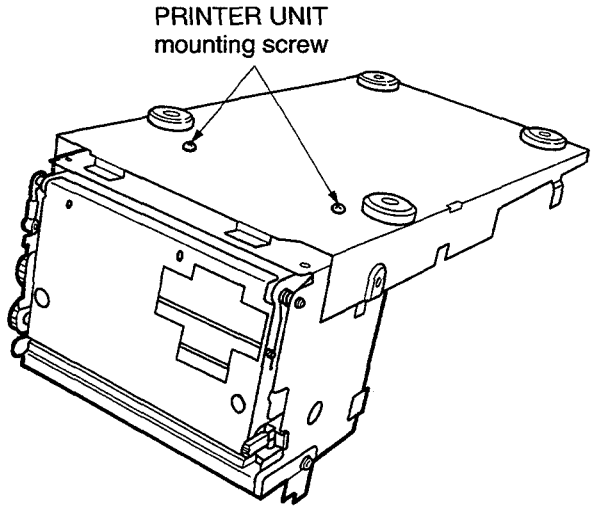

Fig.1-11

REPLACEMENT OF MECHANICAL PARTS

Replacemennt of STEP MOTOR

1. Remove the PRINTER UNIT. (Fig.1-11)
2. Remove the 2 screws securing the STEP MOTOR. (Fig.2-1)
3. For re-assembly, reveres the procedure.

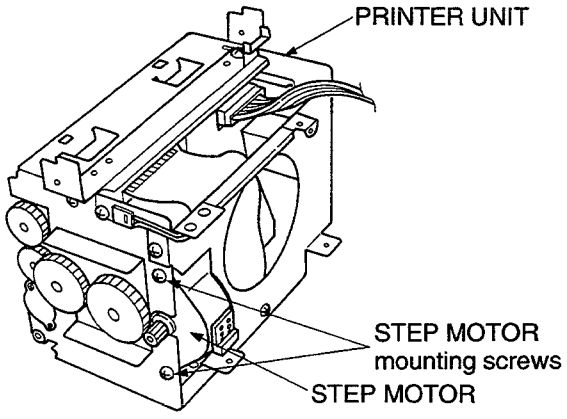

Fig.2-1

Replacement of PLATEN ROLLER

1. Remove the DOOR. (Fig.1-2,1-3)
2. Remove the E-RING on the left side of the PLATEN ROLLER. (Fig.2-2)
3. Remove BEARING. (Fig.2-2)
4. Side the PLATEN ROLLER to the right and remove it.
5. For re-assembly, reverse the procedure.
   Note : Be careful of the direction of bearings.

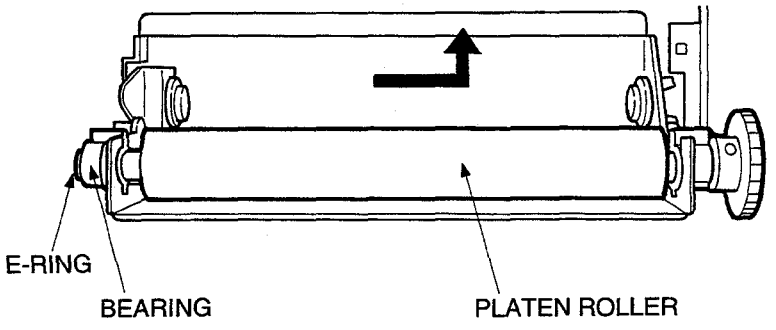

Fig. 2-2

Replacement of PAPER HOLDER

1. Remove the PRINTER UNIT. (Fig.1-11)
2. Remove the E-RINGS (both sides) of the PAPER SHAFT. (Fig.2-3)
3. Pull the PAPPER SHAFT out, to right side.
   Note : Be careful not to lose the door spring which comes off during the above process. (Fig.2-3)
4. Remove the PAPER HOLDER to your side.
5. For re-assembly, reverse the procedure.

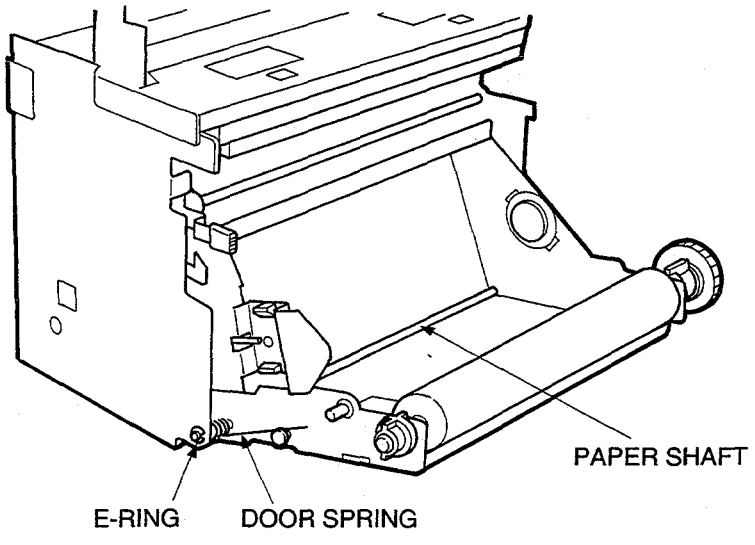

Fig. 2-3

Replacement of THERMAL HEAD

1. Remove the CABINT. (Fig.1-1)
2. Remove the FRONT PANEL.
3. Remove the screws securing POWER SWITCH BRACKET. (Fig.1-8)
4. Remove the B-P SWITCH HOLDER and remove the POWER SWITCH BRACKET. (Fig.1-8)
5. Remove the screws securing the UPPER PLATE.(Fig.2-4)
   Note : The HEAD SPRING is held by the UPPER PLATE. Be careful not to lose the HEAD SPRING.
6. Disconnect all the connectors connected to the THERMAL HEAD.
7. Remove the 3 screws securing the HEAT SINK. (Fig.2-4)

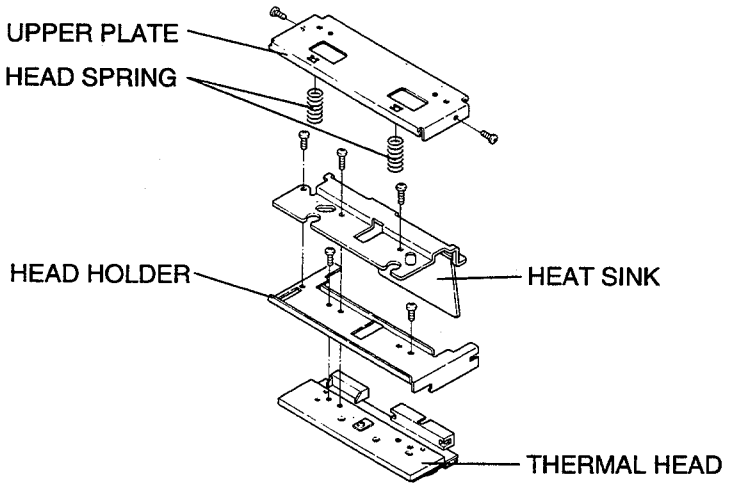

Fig. 2-4

8. Raise the front part of the HEAD HOLDER, slide it and remove it.
9. Remove screws securing the THERMAL HEAD.
   Note : Be careful not to touch the HEAT GENERATING PART. (Fig.2-5)
10. For re-assembling, reverse the procedure.
    Note : When fixing the THERMAL HEAD to the HEAD HOLDER with screws,use the GAUGE BAR and TIGHTEN screws after confirming that the holes are aligned. (Fig. 2-6)

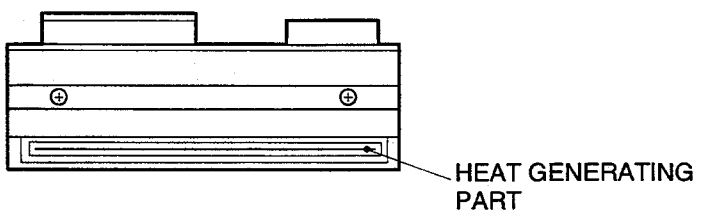

Fig.2-5

Replacement of THERMAL HEAD

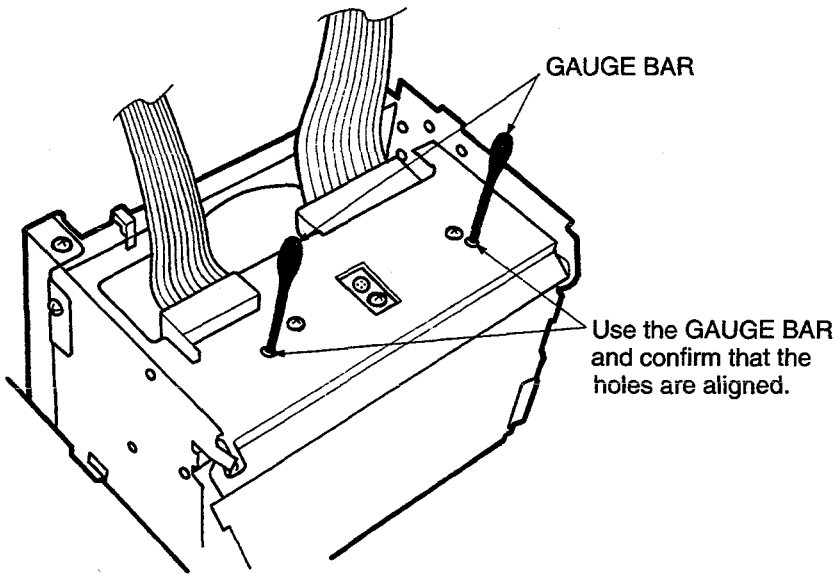

Fig.2-6

CLEANING METHOD

Cleaning of THERMAL HEAD

When the thermal head is dirty with dust or other dirt, rain-drop patterns or white vertical lines may appear in the printed picture.
In this case, use the cleaning sheet (parts No. 857P003O40) or a THERMAL HEAD CLEANER PEN TH-2000 (859C425050) (which can be purchased separately) in the following manner.

※ Do not use a russet CLEANING PAPER (parts No. 857P001O10).
It may damage the THERMAL HEAD.

●How to use the CLEANING PAPER

1 Turn on the power.

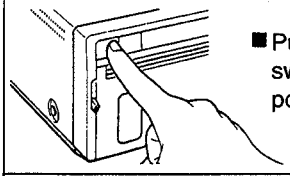

■ Push the **"POWER"** switch to turn on the power.

2 Open the door.

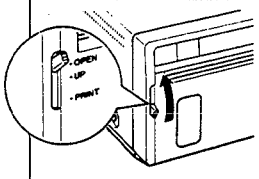

■ Switch the left side lever to the **"OPEN"** position.

3 Insert the cleaning paper.

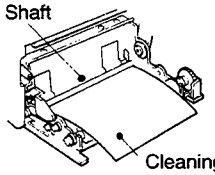

■ Insert the cleaning paper end under the shaft in the set.

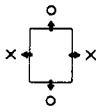

4 Close the door.

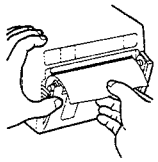

■ Close the door without taking out the cleaning paper.

5 Set the lever to the "PRINT" position.

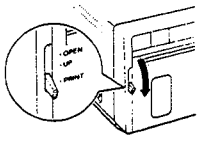

■ The lever located on the left side to **"PRINT"** position.

6 Press the "FEED" button.

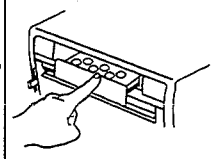

■ Press the button Until the cleaning paper come out about 2 inch.

7 Take out the cleaning paper.

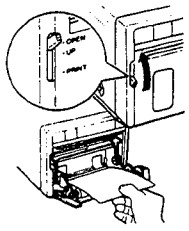

■ Open the door.

■ Remove the cleaning paper.

! Do not pull out the cleaning paper while the door is closed.

8 Repeat the steps **3** - **7** 1 or 2 times, and print 2-3 sheets to verify the cleaning effect.

9 Install the paper roll.

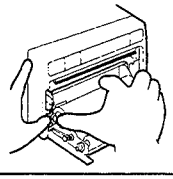

■ Install the paper. See **"4 installation of paper"**.

● How to use THERMAL HEAD CLEANER PEN

1. Draw out the pen from the body and pour a appropriate amount of cleaning solvent to the pen body.
   - When the pen core becomes dirty, replace it with the spare core.
     Note : Move the cleaner pen parallel to the heat generating part (brown part). (Fig.3-1)
   - Since the cleaning solvent is inflammable, close the cap after use and be particularly careful against fire.
   - Keep it in a cool, dark place with no direct exposure to the sun.

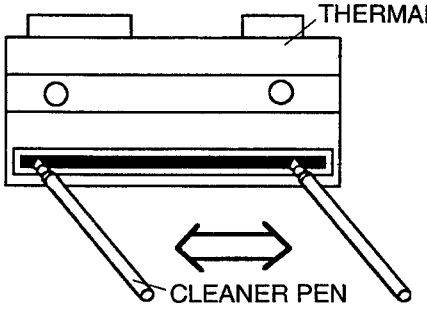

Fig 3-1

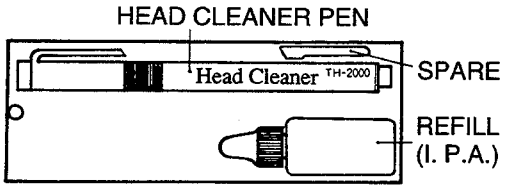

Fig 3-2 HEAD CLEANER PEN
(Separate purchase jig No. 859C425050)

Cleaning of PLATEN ROLLER

When the PLATEN ROLLER is very dirty print quality may be poor. In such cases, clean the platen roller by the following procedure.

1. Open the DOOR or the SET so that the PLATEN ROLLER can be cleaned.
2. Check the PLATEN ROOLER. if dirt or dust is adhered, clean the ROLLER using the blower brush shown in Fig.3-4.
3. When the PLATEN ROLLER is extremely dirty, use alcohol and clean it with a tooth brush while taking care not to damage the ROLLER.
4. When the cleaning is finished, check that normal printing is performed.

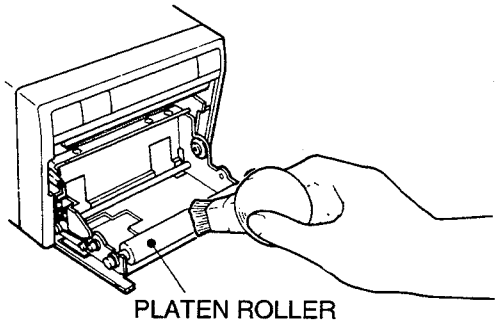

Fig.3-3

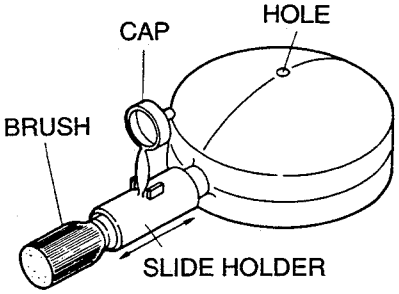

BLOWER BRUSH
(PARTS No. 859D048010)

Fig.3-4

Printed Circuit Boards Location

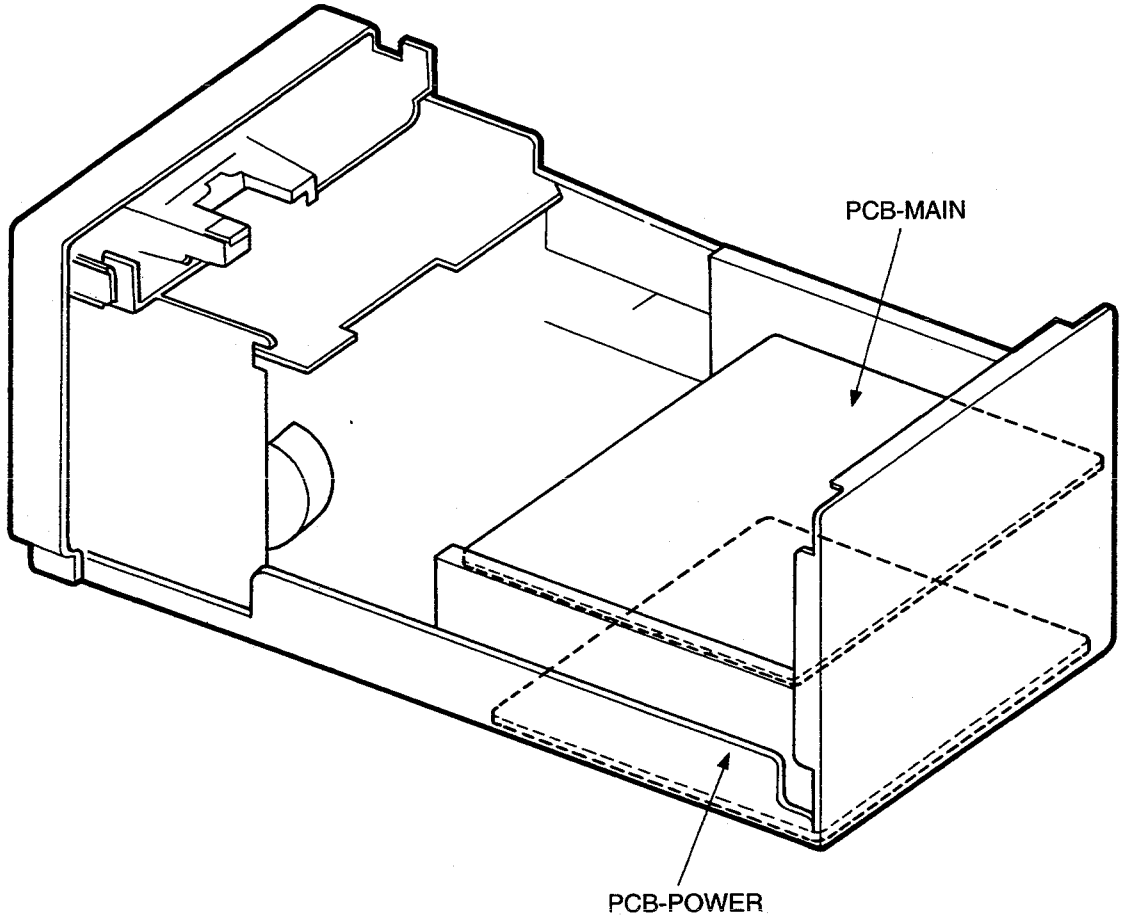

ADJUSTMENT POINTS

PCB–MAIN (COMPONENT SIDE)

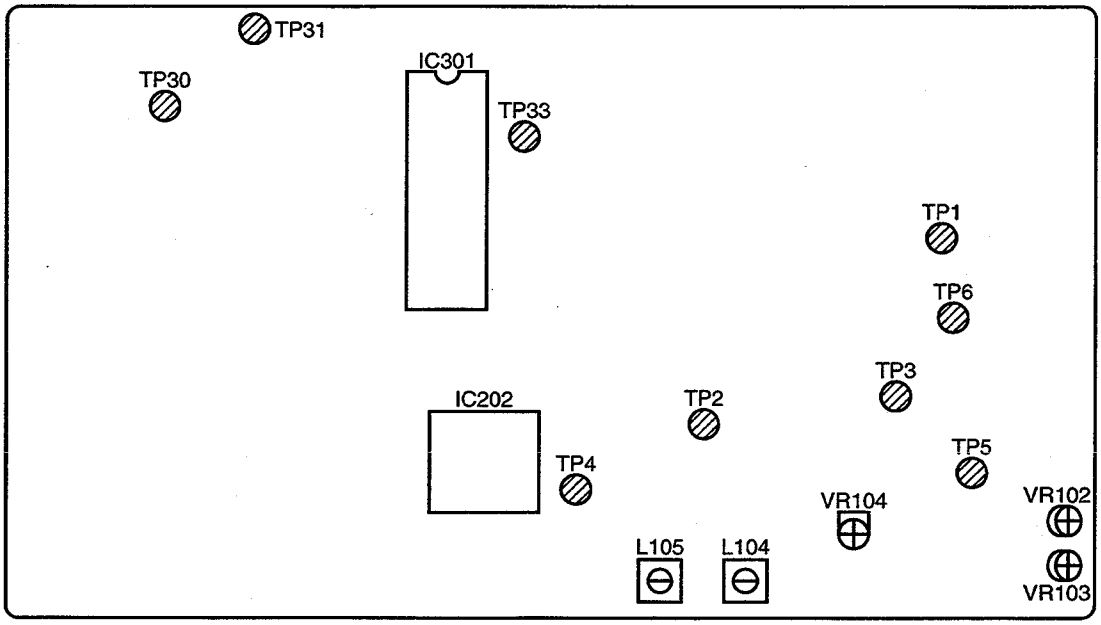

PCB–POWER (COMPONENT SIDE)

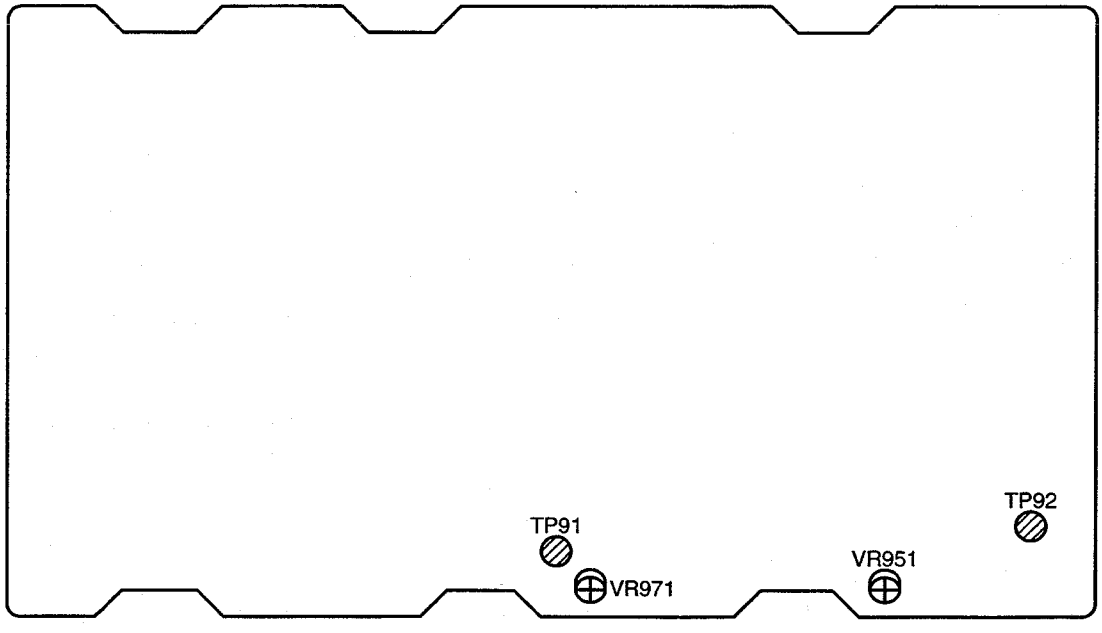

SERVICE MODE

Select the service mode with the buttons in the control box to perform the following adjustment and checks.

- Check the head position detecting level
  (Refer to Page19)
- Check the paper detecting level
  (Refer to Page19)
- Adjustment of item 9
  (SUB-BRIGHT and SUB-CONTRAST)

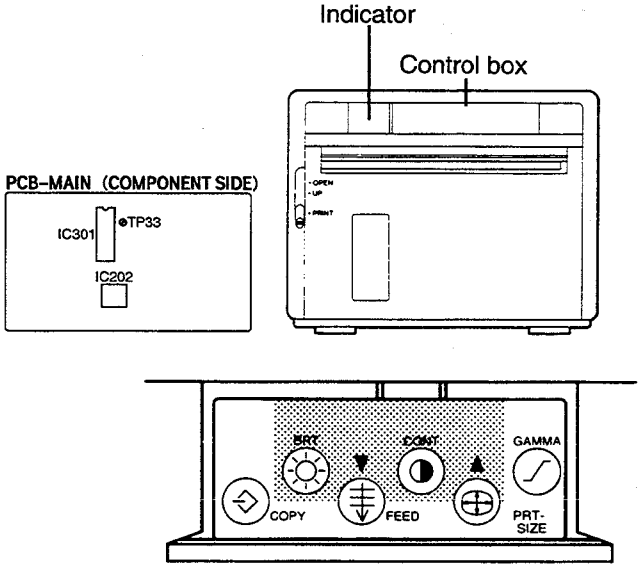

1. How to Select the Service Mode

①Turn the power off.

②Connect TP33 on the PCB-MAIN to GND.

③Turn the power on while pressing the COPY button.

When the indicator LED changes from "55" to "00", stop pressing the button.

(The service mode is selected.)

Note: After ③ is completed, the unit is set to the stand-by mode, with the indicator LED "00".

2. How to Select a Specific Set Up Mode

①Select the set up mode with the CONT button, observing the indicator LED.

Note: The set up mode varies in the order shown by the arrow in the figure.

3. How to Set the Adjustment Value

① After the set up mode is selected, set the adjustment value with the UP or DOWN button.

Note: The adjustment value appears on the right side of the indicator LED.

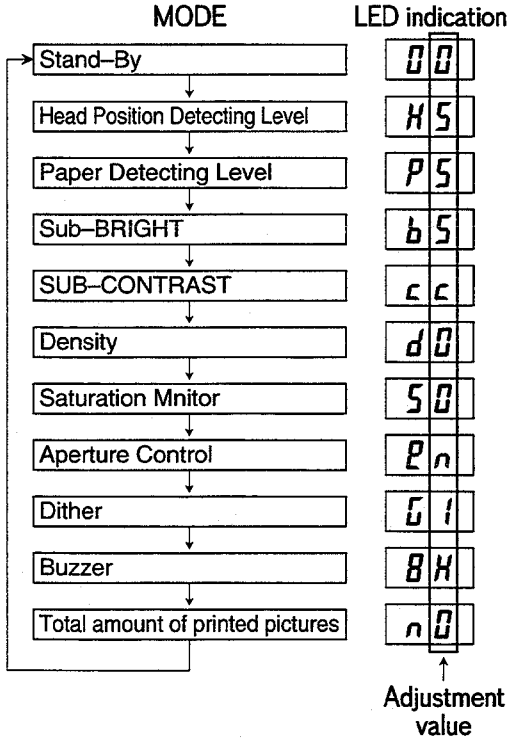

Remarks in Setting the Adjustment Value

- The values for the head position and paper detecting level in the set up mode are fixed.
- Altough variation of the values for SUB-BRIGHT and SUB-CONTRAST can be observed by the amplitude of the waveform on the oscilloscope, the indicator LEDs are fixed. (Refer to item 9 in the Adjustment Procedure.)

The table below describes each set up mode position.

MODE	LED indicata		Right indication of the LED	Note
	Left	Right		
Stand-By	0	00	Print size can be set by varying the adjustment value. It is not necessary to set this in the service mode.	The initial value is restored by pressing the CONT button if the adjustment value is varied in the service mode.
Head Position Detecting Level	H	5	The EED does not vary as much as in the normal mode. (Refer to p.19)	Fixed
Paper Detecting Level	P	5	The LED does not vary as much as in the normal mode. (Refer to p.19)	Ditto
SUB-BRIGHT	b	5	Index of brightness. The LED does not vary even if the adjustment value varies.	Setting can be performed by observing the waveform. (Refer to the Paragraph 8 under Circuit Adjustmens.)
SUB-CONTRAST	C	C	Index of contrast. The LED does not vary even if the adjustment value varies.	Ditto
Density	d	.9~9	Index of density,from .9 (–9) to 9 (9).	Initial setting at shipment is restored by initializing the E²PROM.
Saturation Monitor	S	0 1	Used to reverse the signal polarity (white-black) of the image area that expands over the limits during BRIGHT and CONTRAST adjustment. When 1 (in), the image is reversed and when 0 (out), not reversed.	Ditto
Aperture Control	E	SnH	Index of aperture control. H indicates maximum apreture correction H (Hard), n (Normal), and S (Soft).	Ditto
Dither	G	0 1	Used to select the gradation. 1 (in) indicates 256 gradations and 0 (out) 64 gradations.	Ditto
Buzzer	B	0LH	Used to select the buzzer.	Ditto
Total amount of printed Pictures	n	0 1	Used to print (or not print) the total amaunt of the printed picture on the paper. When 1 (in), it is printed and when 0 (out) it is not printed.	Ditto Only when checking the number of the printed picture, the value of 1 (in) should be set.

4. How to Memorize the Adjustment Value and to Quit the Service Mode

①Either press the BRT button or press PRINT button, print.

(To memorize the adjustment value and to quit the service mode.)

Note: If power is switched off, the service mode is terminated, but adjustment data is not memorized.

ADJUSTMENT MODE

Select the adjustment mode with the buttons in the control box to perform the circuit adjustments in item 7 (clock frequency).
Note: Do not select any adjustment mode except for the above adjustments.

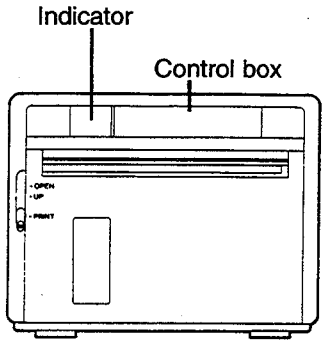

1. How to Select the Adjustment Mode

①Turn the power off.
②Connect TP33 on the PCB-MAIN to GND.
③Turn the power on while pressing the GAMMA button.
When the indicator LED is turned from " -- " to " 00 ", stop pressing the button.
(Adjustment mode is selected.)
Note: After ③ is completed, the unit is set to the stand-by mode, with the indicator LED " 00 ".

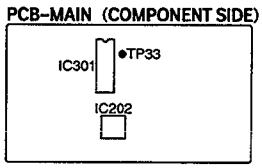

2. How to Select the Adjustment Item

●Adjustment in item 7 (clock frequency)
①Press the UP button.
②Check that the LED indicates" F7 " after approximately two seconds.

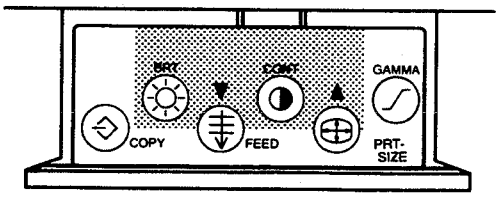

3. How to Quit the Adjustment Mode

①Turn the power off.
Note: If you make an error during the adjustment mode, turn the power off and select the adjustment mode again.

Check of Detection Level for Head Position and Paper

This procedure checks the performance of SH sensor and PS sensor.
Select the service mode to make the check. (Page 16)

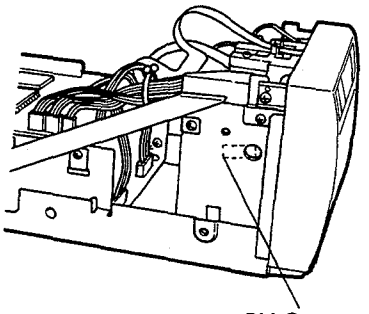

1. Check of Detection Level for Head Position (SH sensor)

①Select the service mode.
②Press the CONT button to set the indicator LED to "H5".
③Lower the front lever to PRINT position.
④Check that the indicator LED turns from "H5" to "H0" when press the COPY button.
⑤Check that the indicator LED turns into "Er" when the front lever is in the UP position.
Note: If the LED indicates "Er" with procedures ④ and ⑤, check the SH sensor or PCB-MAIN.
⑥ Terminate the service mode. (Page 17)

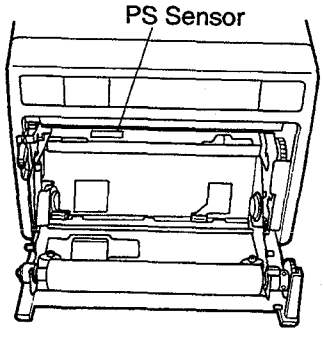

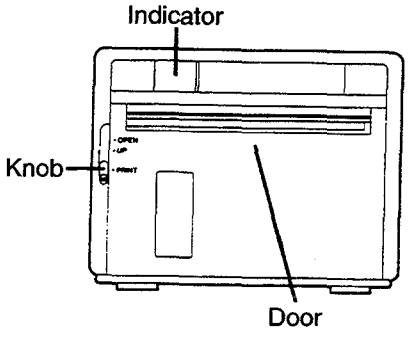

2. Check of Detection Level for Paper (PS sensor)

①Select the service mode.
②Open the door and take the paper out.
③Insert cleaning paper and close the door.
Note: The cleaning paper should be placed with the less sensitive side up. It should have no mechanical damage or dirt. The less sensitive side is specified by observing the voltage at TP31. The lowest voltage indicates less sensitive side.

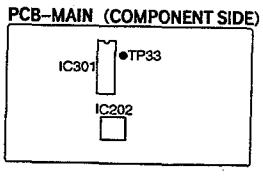

④Press the CONT button to change the indicator LED into "P5".
⑤Press the COPY button and check that the indicator LED changes from "P5".to "P0".
⑥Check that the LED dose not indicate "Er" then open the door and remove the paper.
Note: If the LED indicate "Er" with the procedures ⑤ and ⑥, check the PS sensor or PCB-MAIN.
⑦Terminate the service mode. (Page 17)

INITIALIZATION OF THE E²PROM

When the PCB-MAIN, EPROM (IC303) or E²PROM (IC309) is replaced. initialize the E²PROM with the following procedure.

①Turn the power off.
②Turn the power on while pressing the GAMMA and COPY buttons at the same time.
③Check that the indicator LED turns from "11" to "00".

Note: Keep pressing the buttons until the indicator LED turns from "11" to "00".

After E²PROM is initialized, the following adjustment values in the setting mode are restored to the initial values at shipment.
Thercfore they need not be set.

- Density (LED indicate: "d0")
- Saturation Monitor (LED indicate: "S0")
- Aperture Control (LED indicate: "En")
- Dither (Gradation) (LED indicate: "G1")
- Buzzer (LED indicate: "BK")
- Total amount of the printed pictures (LED indicate: "n0")

INTIAL SETTING

Before making adjustments , preset the mode switch.

1) Mode switch and other

Mode switch presets

Setting point			Setting
S101 mode swith	#10	PAPER TYPE	HD
	#9	PAPER SAV.	OFF
	#8	SCAN	UNDER
	#7	MEMORY	FRAME
	#6	DIRECTION	NORMAL
	#5	AFC	OFF
	#4	IMAGE	POSI.
	#3	PAL TRAP	OFF
	#2	NTSC TRAP	OFF
	#1	IMPEDANCE	75Ω

Other preset

Setting point		Setting
Power	OFF/ON	ON
FRONT PANEL	Paper	K65HM
Lever	OPEN/HEAD UP/ PRINT	HEAD UP
Remote	Input Terminal	Remote
VIDEO IN	Input Terminal	Grey scale
VIDEO OUT	Output Terminal	Monitor
AC IN	Power Input	220~240V 50HZ

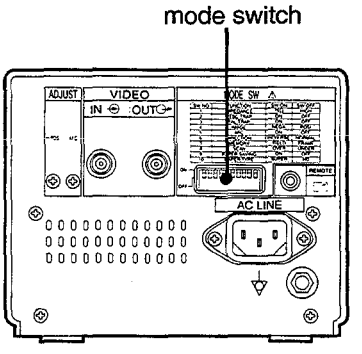

2) Input signal

Video Signal Grey scale (1.0Vp-p)

100%=0.714±0.01Vp−p (at 75Ω load end)

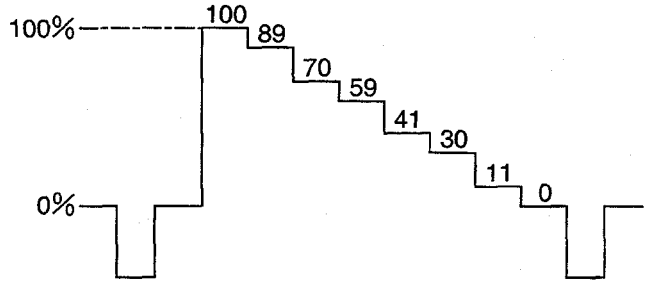

3) Oscilloscope

Unless otherwise specified, use 10:1 probes

1.Rough adjustment of power Voltage	**Adjustment purpose** To set the power voltage. **Symptom when incorrectly adjusted** No LED indication or the picture is not printed.

Measuring instrument	Digital voltmeter
Test point	TP91
EXT trigger	---
Measurement range	---
Input signal	---
Input Terminal	---

1.Connect the positive (+) of the voltmeter to TP91 and the negative (–) to TP71. Then turn VR971 Counter - clockwise so that it is at 90°
2. Turn the power on.
3. Adjust VR971 for 25V±0.5V.

PCB-POWER (COMPONENT SIDE)

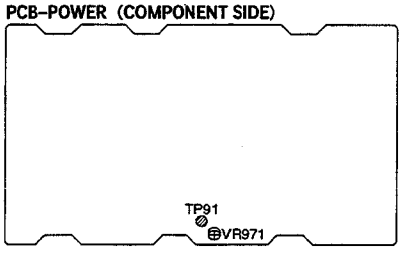

2.Main Voltage/Head voltage	**Adjustment purpose** To correct uneven density of the printed picture caused by unevenness of head resistance. **Symptom when incorrectly adjusted** Too dense or too thin printed pictures, particularly in black areas resulting in dull or burnt black picture.

Measuring instrument	Digital voltmeter
Test point	TP91, TP92
EXT trigger	---
Measurement range	---
Input signal	---
Input Terminal	---

1. Calculate E1 and E2 using the equation given below, and the resistance R indicated on the THERMAL HEAD.
E2[V] : Refer to Conversion Table.(Refer to page 23,24)
E1=E2+2.5 [V]
2.Connect TP30 to the chassis sheet metal by a short-circuit lead.
3. Connect the positive (+) of voltmeter to TP91 and the negative (—) to the chassis sheet metal. Adjust VR971 so that the reading is E1±0.05V.
4. Connect the positive (+) of the voltmeter to TP92 and the negative (—) to the chassis sheet metal.
5. Adjust VR951 so that the reading is E2±0.05V.
6. Remove the voltmeter and the short-circuit lead.

PCB-POWER (COMPONENT SIDE)

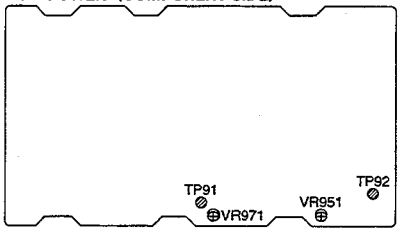

PCB-MAIN (COMPONENT SIDE)

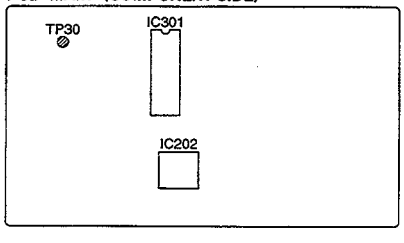

THERMAL HEAD

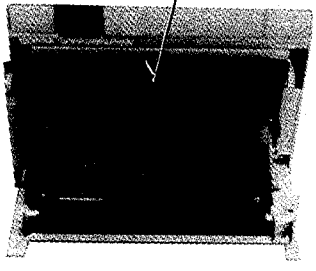

CONVERSION TABLE
(Resistance indicated on the head → Voltage at the head(E2))

Resistance 3 significant figures	Resistanse 4th figure Ω									
	0	1	2	3	4	5	6	7	8	9
4710	21.151	21.154	21.156	21.158	21.160	21.163	21.165	21.167	21.169	21.171
4720	21.174	21.176	21.178	21.180	21.183	21.185	21.187	21.189	21.191	21.194
4730	21.196	21.198	21.200	21.202	21.205	21.207	21.209	21.211	21.214	21.216
4740	21.218	21.220	21.222	21.225	21.227	21.229	21.231	21.233	21.236	21.238
4750	21.240	21.242	21.244	21.247	21.249	21.251	21.253	21.256	21.258	21.260
4760	21.262	21.264	21.267	21.269	21.271	21.273	21.275	21.278	21.280	21.282
4770	21.284	21.286	21.289	21.291	21.293	21.295	21.297	21.300	21.302	21.304
4780	21.306	21.308	21.311	21.313	21.315	21.317	21.319	21.322	21.324	21.326
4790	21.328	21.330	21.333	21.335	21.337	21.339	21.341	21.344	21.346	21.348
4800	21.350	21.352	21.355	21.357	21.359	21.361	21.363	21.366	21.368	21.370
4810	21.372	21.374	21.377	21.379	21.381	21.383	21.385	21.388	21.390	21.392
4820	21.394	21.396	21.399	21.401	21.403	21.405	21.407	21.410	21.412	21.414
4830	21.416	21.418	21.421	21.423	21.425	21.427	21.429	21.431	21.434	21.436
4840	21.438	21.440	21.442	21.445	21.447	21.449	21.451	21.453	21.456	21.458
4850	21.460	21.462	21.464	21.466	21.469	21.471	21.473	21.475	21.477	21.480
4860	21.482	21.484	21.486	21.488	21.491	21.493	21.495	21.497	21.499	21.501
4870	21.504	21.506	21.508	21.510	21.512	21.515	21.517	21.519	21.521	21.523
4880	21.525	21.528	21.530	21.532	21.534	21.536	21.539	21.541	21.543	21.545
4890	21.547	21.549	21.552	21.554	21.556	21.558	21.560	21.562	21.565	21.567
4900	21.569	21.571	21.573	21.576	21.578	21.580	21.582	21.584	21.586	21.589
4910	21.591	21.593	21.595	21.597	21.599	21.602	21.604	21.606	21.608	21.610
4920	21.612	21.615	21.617	21.619	21.621	21.623	21.626	21.628	21.630	21.632
4930	21.634	21.636	21.639	21.641	21.643	21.645	21.647	21.649	21.652	21.654
4940	21.656	21.658	21.660	21.662	21.665	21.667	21.669	21.671	21.673	21.675
4950	21.678	21.680	21.682	21.684	21.686	21.688	21.691	21.693	21.695	21.697
4960	21.699	21.701	21.704	21.706	21.708	21.710	21.712	21.714	21.716	21.719
4970	21.721	21.723	21.725	21.727	21.729	21.732	21.734	21.736	21.738	21.740
4980	21.742	21.745	21.747	21.749	21.751	21.753	21.755	21.758	21.760	21.762
4990	21.764	21.766	21.768	21.770	21.773	21.775	21.777	21.779	21.781	21.783
5000	21.786	21.788	21.790	21.792	21.794	21.796	21.798	21.801	21.803	21.805
5010	21.807	21.809	21.811	21.814	21.816	21.818	21.820	21.822	21.824	21.826
5020	21.829	21.831	21.833	21.835	21.837	21.839	21.842	21.844	21.846	21.848
5030	21.850	21.852	21.854	21.857	21.859	21.861	21.863	21.865	21.867	21.869
5040	21.872	21.874	21.876	21.878	21.880	21.882	21.884	21.887	21.889	21.891
5050	21.893	21.895	21.897	21.899	21.902	21.904	21.906	21.908	21.910	21.912
5060	21.914	21.917	21.919	21.921	21.923	21.925	21.927	21.929	21.932	21.934
5070	21.936	21.938	21.940	21.942	21.944	21.947	21.949	21.951	21.953	21.955
5080	21.957	21.959	21.962	21.964	21.966	21.968	21.970	21.972	21.974	21.976
5090	21.979	21.981	21.983	21.985	21.987	21.989	21.991	21.994	21.996	21.998
5100	22.000	22.002	22.004	22.006	22.009	22.011	22.013	22.015	22.017	22.019
5110	22.021	22.023	22.026	22.028	22.030	22.032	22.034	22.036	22.038	22.040
5120	22.043	22.045	22.047	22.049	22.051	22.053	22.055	22.058	22.060	22.062
5130	22.064	22.066	22.068	22.070	22.072	22.075	22.077	22.079	22.081	22.083
5140	22.085	22.087	22.089	22.092	22.094	22.096	22.098	22.100	22.102	22.104
5150	22.106	22.109	22.111	22.113	23.115	22.117	22.119	22.121	22.123	22.126
5160	22.128	22.130	22.132	22.134	22.136	22.138	22.140	22.142	22.145	22.147
5170	22.149	22.151	22.153	22.155	22.157	22.159	22.162	22.164	22.166	22.168
5180	22.170	22.172	22.174	22.176	22.178	22.181	22.183	22.185	22.187	22.189
5190	22.191	22.193	22.195	22.198	22.200	22.202	22.204	22.206	22.208	22.210
5200	22.212	22.214	22.217	22.219	22.221	22.223	22.225	22.227	22.229	22.231
5210	22.233	22.236	22.238	22.240	22.242	22.244	22.246	22.248	22.250	22.252
5220	22.255	22.257	22.259	22.261	22.263	22.265	22.267	22.269	22.271	22.274
5230	22.276	22.278	22.280	22.282	22.284	22.286	22.288	22.290	22.292	22.295
5240	22.297	22.299	22.301	22.303	22.305	22.307	22.309	22.311	22.314	22.316
5250	22.318	22.320	22.322	22.324	22.326	22.328	22.330	22.332	22.335	22.337
5260	22.339	22.341	22.343	22.345	22.347	22.349	22.351	22.353	22.356	22.358
5270	22.360	22.362	22.364	22.366	22.368	22.370	22.372	22.374	22.377	22.379
5280	22.381	22.383	22.385	22.387	22.389	22.391	22.393	22.395	22.398	22.400
5290	22.402	22.404	22.406	22.408	22.410	22.412	22.414	22.416	22.418	22.421

Resistance 3 significant figures	Resistanse 4th figure Ω									
	0	1	2	3	4	5	6	7	8	9
5300	22.423	22.425	22.427	22.429	22.431	22.433	22.435	22.437	22.439	22.441
5310	22.444	22.446	22.448	22.450	22.452	22.454	22.456	22.458	22.460	22.462
5320	22.464	22.467	22.469	22.471	22.473	22.475	22.477	22.479	22.481	22.483
5330	22.485	22.487	22.490	22.492	22.494	22.496	22.498	22.500	22.502	22.504
5340	22.506	22.508	22.510	22.512	22.515	22.517	22.519	22.521	22.523	22.525
5350	22.527	22.529	22.531	22.533	22.535	22.538	22.540	22.542	22.544	22.546
5360	22.548	22.550	22.552	22.554	22.556	22.558	22.560	22.562	22.565	22.567
5370	22.569	22.571	22.573	22.575	22.577	22.579	22.581	22.583	22.585	22.587
5380	22.590	22.592	22.594	22.596	22.598	22.600	22.602	22.604	22.606	22.608
5390	22.610	22.612	22.614	22.617	22.619	22.621	22.623	22.625	22.627	22.629
5400	22.631	22.633	22.635	22.637	22.639	22.641	22.643	22.646	22.648	22.650
5410	22.652	22.654	22.656	22.658	22.660	22.662	22.664	22.666	22.668	22.670
5420	22.672	22.675	22.677	22.679	22.681	22.683	22.685	22.687	22.689	22.691
5430	22.693	22.695	22.697	22.699	22.701	22.704	22.706	22.708	22.710	22.712
5440	22.714	22.716	22.718	22.720	22.722	22.724	22.726	22.728	22.730	22.732
5450	22.735	22.737	22.739	22.741	22.743	22.745	22.747	22.749	22.751	22.753
5460	22.755	22.757	22.759	22.761	22.763	22.765	22.768	22.770	22.772	22.774
5470	22.776	22.778	22.780	22.782	22.784	22.786	22.788	22.790	22.792	22.794
5480	22.796	22.798	22.800	22.803	22.805	22.807	22.809	22.811	22.813	22.815
5490	22.817	22.819	22.821	22.823	22.825	22.827	22.829	22.831	22.833	22.835
5500	22.838	22.840	22.842	22.844	22.846	22.848	22.850	22.852	22.854	22.856
5510	22.858	22.860	22.862	22.864	22.866	22.868	22.870	22.872	22.874	22.877
5520	22.879	22.881	22.883	22.885	22.887	22.889	22.891	22.893	22.895	22.897
5530	22.899	22.901	22.903	22.905	22.907	22.909	22.911	22.913	22.915	22.918
5540	22.920	22.922	22.924	22.926	22.928	22.930	22.932	22.934	22.936	22.938
5550	22.940	22.942	22.944	22.946	22.948	22.950	22.952	22.954	22.956	22.958
5560	22.961	22.963	22.965	22.967	22.969	22.971	22.973	22.975	22.977	22.979
5570	22.981	22.983	22.985	22.987	22.989	22.991	22.993	22.995	22.997	22.999
5580	23.001	23.003	23.005	23.007	23.010	23.012	23.014	23.016	23.018	23.020
5590	23.022	23.024	23.026	23.028	23.030	23.032	23.034	23.036	23.038	23.040
5600	23.042	23.044	23.046	23.048	23.050	23.052	23.054	23.056	23058	23.060
5610	23.063	23.065	23.067	23.069	23.071	23.073	23.075	23.077	23.079	23.081
5620	23.083	23.085	23.087	23.089	23.091	23.093	23.095	23.097	23.099	23.101
5630	23.103	23.105	23.107	23.109	23.111	23.113	23.115	23.117	23.119	23.121
5640	23.123	23.126	23.128	23.130	23.132	23.134	23.136	23.138	23.140	23.142
5650	23.144	23.146	23.148	23.150	23.152	23.154	23.156	23.158	23.160	23.162
5660	23.164	23.166	23.168	23.170	23.172	23.174	23.176	23.178	23.180	23.182
5670	23184	23.186	23.188	23.190	23.192	23.194	23.196	23.198	23.201	23.203
5680	23.205	23.207	23.209	23.211	23.213	23.215	23.217	23.219	23.221	23.223
5690	23.225	23.227	23.229	23.231	23.233	23.235	23.237	23.239	23.241	23.243
5700	23.245	23.247	23.249	23.251	23.253	23.255	23.257	23.259	23.261	23.263
5710	23.265	23.267	23.269	23.271	23.273	23.275	23.277	23.279	23.281	23.283
5720	23.285	23.287	23.289	23.291	23.293	23.295	23.297	23.299	23.301	23.303
5730	23.305	23.307	23.310	23.312	23.314	23.316	23.318	23.320	23.322	23.324
5740	23.326	23.328	23.330	23.332	23.334	23.336	23.338	23.340	23.342	23.344
5750	23.346	23.348	23.350	23.352	23.354	23.356	23.358	23.360	23.362	23.364
5760	23.366	23.368	23.370	23.372	23.374	23.376	23.378	23.380	23.382	23.384
5770	23.386	23.388	23.390	23.392	23.394	23.396	23.398	23.400	23.402	23.404
5780	23.406	23.408	23.410	23.412	23.414	23.416	23.418	23.420	23.422	23.424
5790	23.426	23.428	23.430	23.432	23.434	23.436	23.438	23.440	23.442	23.444
5800	23.446	23.448	23.450	23.452	23.454	23.456	23.458	23.460	23.462	23.464
5810	23.466	23.468	23.470	23.472	23.474	23.476	23.478	23.480	23.482	23.484
5820	23.486	23.488	23.490	23.492	23.494	23.496	23.498	23.500	23.502	23.504
5830	23.506	23.508	23.510	23.512	23.514	23.516	23.518	23.520	23.522	23.524
5840	23.526	23.528	23.530	23.532	23.534	23.536	23.538	23.540	23.542	23.544
5850	23.546	23.548	23.550	23.552	23.554	23.556	23.558	23.560	23.562	23.564
5860	23.566	23.568	23.570	23.572	23.574	23.576	23.578	23.580	23.582	23.584

3.Vertical Sync Separation	**Adjustment purpose** To set the timing of the vertical sync signal versus the input signal. **Symptom when incorrectly adjusted** The odd and the even fields of the printed image are reversed.

Measuring instrument	Oscilloscope
Test point	CH1 : TP1 CH2 : TP3
EXT trigger	---
Measurement range	DIV : CH1 CH2 TIM : 10 μsec (DELAY mode)
Input signal	Video signal (Grey scale)
Input Terminal	VIDEO IN terminal

1.Supply a video signal (grey scale).
2.Connect CH1 of the oscilloscope to TP1 and CH2 to TP3.
3.Trigger in the falling edge of CH2.
4.Magnify the falling edge of CH2.
5.Adjust VR101 so that tv,in following figure, is 18± μsec.

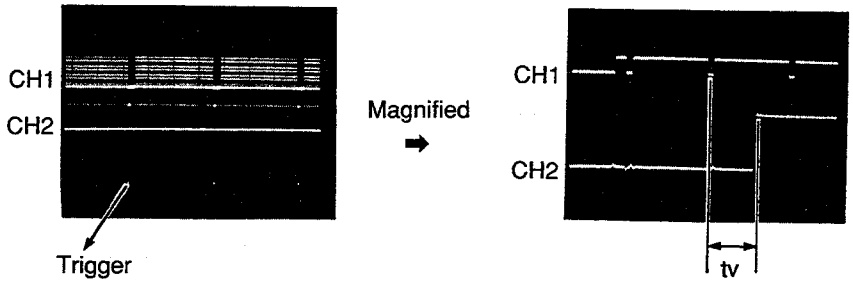

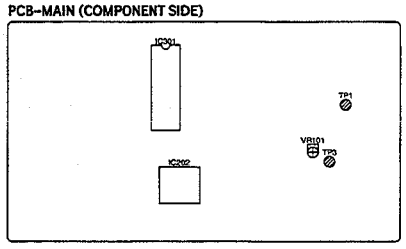

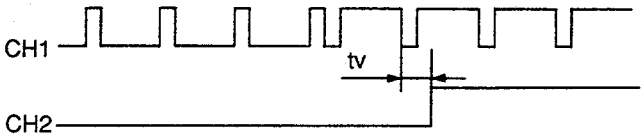

4.Horizontal Sync Pulse Width	**Adjustment purpose** To set the pulse width of the horizontal sync signal. **Symptom when incorrectly adjusted** Horizontal position of the printed picture shifts to left or right when using a composite signal.

Measuring instrument	Oscilloscope
Test point	CH1:TP5
EXT trigger	---
Measurement range	DIV:0.1V TIM:1 μsec (DELAY mode)
Input signal	Video signal (Grey scale)
Input Terminal	VIDEO IN terminal

1.Supply a video signal (grey scale).
2.Check that #5: AFC switch of S101 (MODE) is in the "OFF" position.
3.Connect CH1 of the oscilloscope to TP5.
4.Trigger in the rising edge of CH1.
Magnify the pulse width (tp) of CH1 using delay sweep.
5.Adjust VR104 so that the pulse width of the waveform is tp=4.5±0.1 μsec.

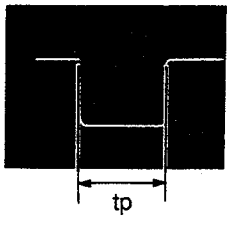

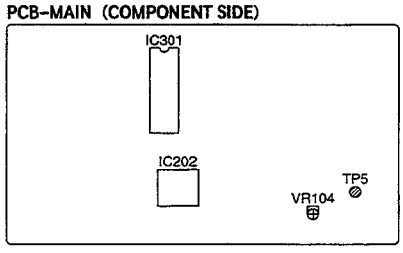

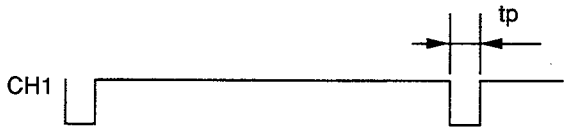

5. Horizontal AFC	**Adjustment purpose** To correct stabilize the horizontal AFC circuit when inputting video signal. **Symptom when incorrectly adjusted** Erratic horizontal sync. when inputting video signal.

Measuring instrument	Oscilloscope
Test point	CH1:TP1 CH2:TP5
EXT trigger	---
Measurement range	DIV:CH1 50mV CH2 0.2V TIM:2 μsec (DELAY mode)
Input signal	Video signal (Grey scale)
Input Terminal	VIDEO IN terminal

1.Supply a video signal (gray scale).
2.Check that #4: AFC switch of S101 (MODE) is on the "OFF" position.
3.Connect CH1 of the oscilloscope to TP1 and CH2 to TP5.
4.Trigger in the falling edge of CH2.
5.Magnify the falling edge of CH1 by using delay trigger and set it to the centre in the screen of the oscilloscope.
6.set the AFC to "ON". Adjust VR102 so that the phase difference between the centre of the screen and the falling edge of CH1 is ta=0±0.1 μsec. Then turn #5: AFT switch of the S101 (MODE) off.

PCB-MAIN (COMPONENT SIDE)

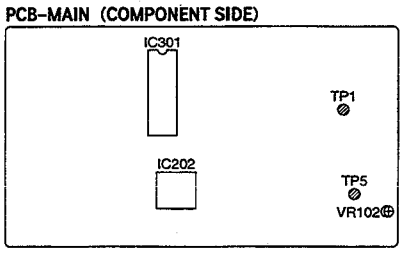

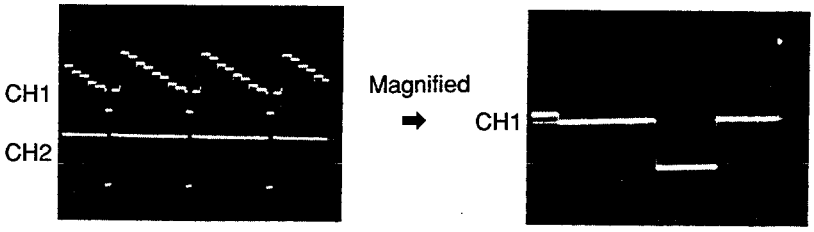

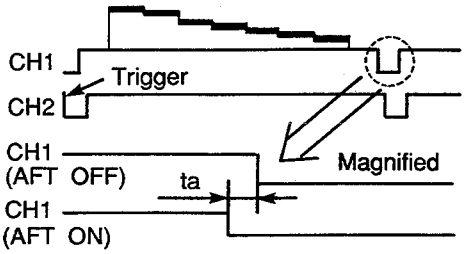

6.Horizontal position	**Adjustment purpose** To set the horizontal position for composite signal. **Symptom when incorrectly adjusted** Horizontal position of printed picture shifts to left or right when inputting composite signal.

Measuring instrument	Oscilloscope
Test point	CH1:TP1 CH2:TP4
EXT trigger	---
Measurement range	DIV:CH1 50mV CH2 0.2V TIM:1 μsec (DELAY mode)
Input signal	Video signal (Grey scale)
Input Terminal	VIDEO IN terminal

1.Supply a video signal (grey scale).
2.Check that #5: AFC switch of S101 (MODE) is in the "OFF" position.
3.Connect CH1 of the oscilloscope to TP1 and CH2 to TP4.
4.Trigger in the falling edge of CH2 and magnify that portion using delay sweep.
5.Adjust VR103 so that the phase difference between the falling edge of CH1 and the rising edge of CH2 is th=5.0±0.1 μsec.

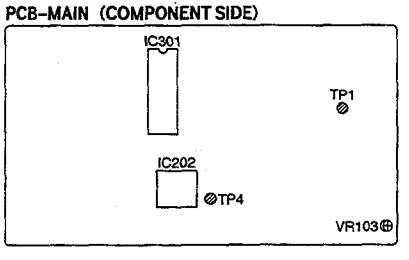

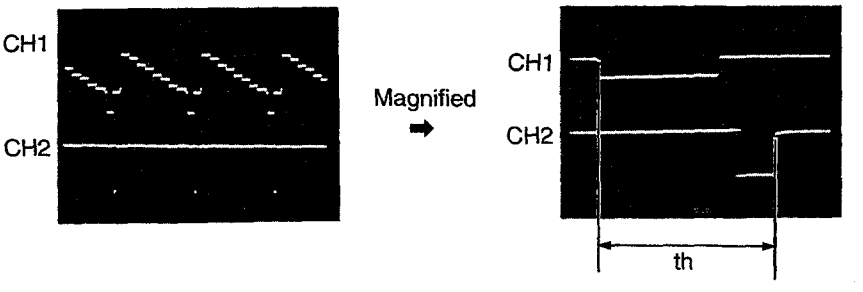

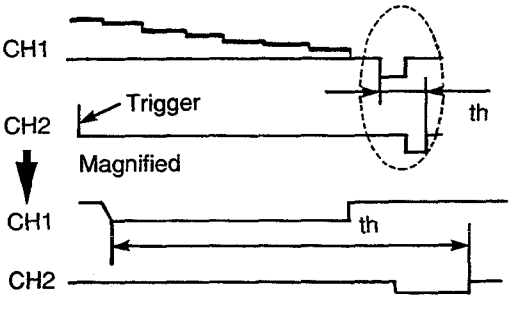

7.Clock frequency	**Adjustment purpose**	To set the oscillating frequency of the sampling clock oscillator.
	Symptom when incorrectly adjusted	Too wide or too narrow horizontal image printed.

Measuring instrument	Oscilloscope
Test point	CH1:TP1 CH2:TP6
EXT trigger	---
Measurement range	DIV:CH1 50mV CH2 0.1V TIM:1 μsec (DELAY mode)
Input signal	Video signal (Grey scale)
Input Terminal	VIDEO IN terminal

1.Supply a video signal (grey scale).
2.Press the GAMMA button to set the LED to "00" (stand-by mode).
3.Press the UP button to set the LED to "FP".
4.Connect CH1 of the oscilloscope to TP1 and CH2 to TP6.
5.Adjust L105 so that tH in the following figure is 0.55±0.1 μsec.

PCB-MAIN (COMPONENT SIDE)

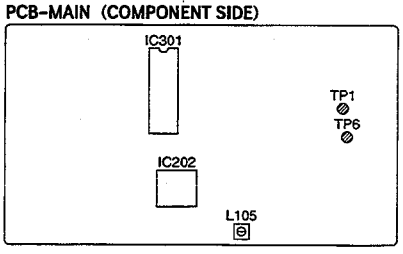

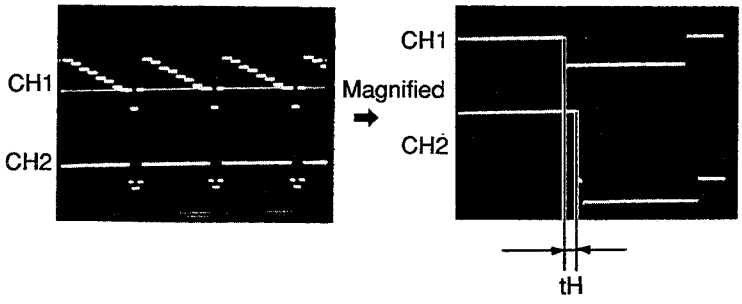

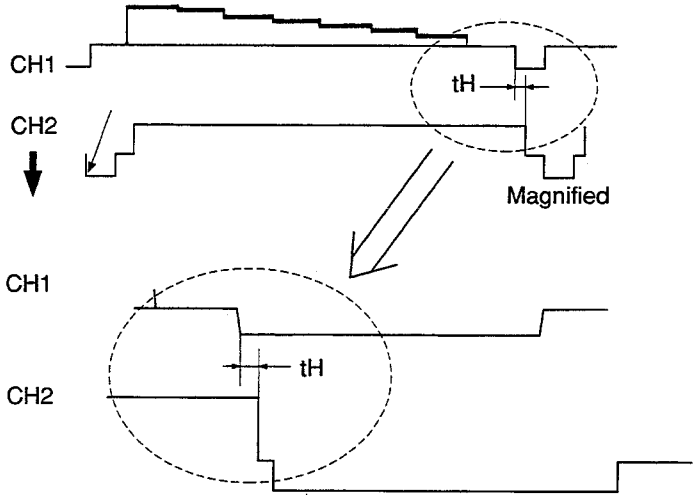

8.SUB-BRIGHT SUB-CONTRAST	**Adjustment purpose** To set the brightness and white level saturation of the input signal. **Symptom when incorrectly adjusted** Poor brightness, or poor contrast, level of the printed or memorized picture.

Measuring instrument	Oscilloscope
Test point	CH1:TP6 CH2:TP4
EXT trigger	---
Measurement range	DIV:10mV TIM:10 μsec
Input signal	Video Signal (Grey scale)
Input Terminal	VIDEO IN terminal

1.Supply a video signal (grey scale).
2.Select the service mode.
3.Press the CONT button three times to set the LED to "b5"
4.Connect CH1 of the oscilloscope to TP6 and CH2 to TP4.
5.Trigger in the rising of CH2.
6.Observe the waveform to TP6.
7.Press the UP and DOWN buttons so that Vb in the figure below is 0.05±0.01Vp-p.
8.Press the CONT button once to set the LED to "cc".
9.Press the UP and DOWN buttons so that Vc, in the figure below is 0.05±0.01Vp-p.

PCB-MAIN (COMPONENT SIDE)

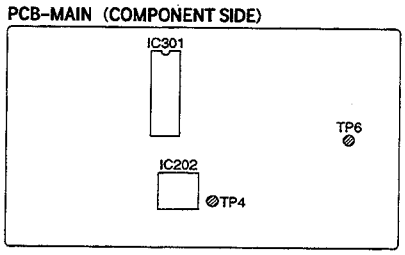

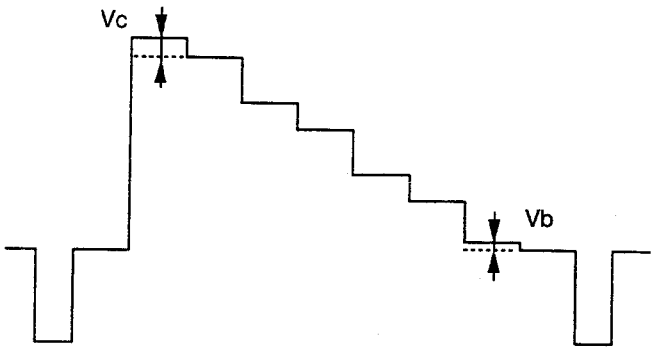

CHIP PARTS REPLACEMENT

CHIP PARTS REPLACEMENT

Some resistors, shorting jumpers (0Ω resistor), ceramic capacitors, transistors and diodes are chip parts which are used for certain circuit elements. When replacing these parts, note the following cautions.

Cautions:

A. Use fine tipped, well insulated soldering pencil (iron) about 30 watts and tweezers.
B. Melting the solder, remove the Chip Parts carefully not to tear off the copper foil of the printed circuit board.
C. Discard removed chips; do not reuse them.
D. Do not apply heat for more than 3 seconds to the new Parts.
E. Avoid using a rubbing stroke when soldering.
F. Take care not to scratch when soldering, or damage the Chip Parts.
G. Supplementary cementing is not required.

1 Removal of chip Parts
(Resistors, capacitors, etc.)

A. Grasp the part with tweezers. Melting the solder at both side alternately, remove the one side of the part with a twisting motion.
B. Melt the solder at the other side and remove the part.

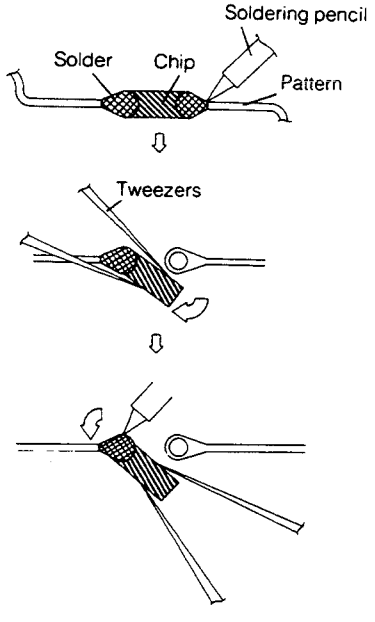

Fig. 1

2 Removal of Chip Parts (Transistors)

A. Melting the solder of one lead, Lift the side of that lead upward.
B. Simultaneously melt the solder of the two remaining leads and lift the part to remove.

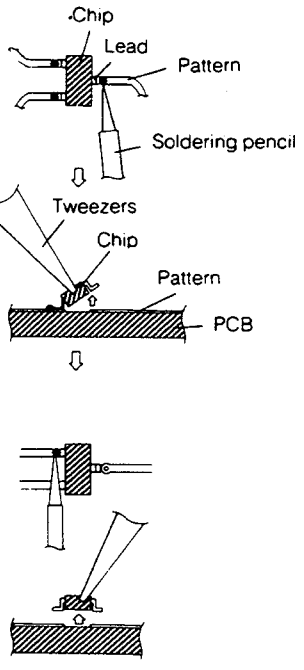

Fig. 2

3 Replacement

A. Presolder the contact points of the circuit pattern.
B. Press the part downward with tweezers and apply the soldering pencil as shown in the figure.

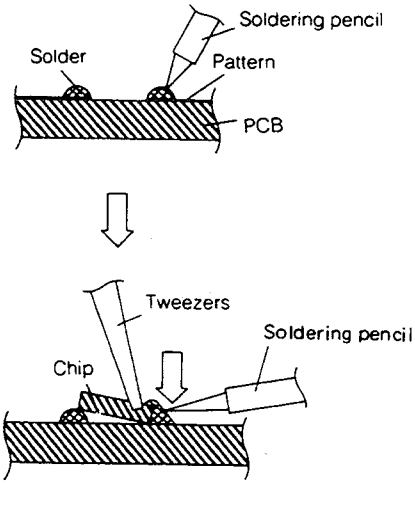

Fig. 3

PARTS LIST

MODEL : P67E

In order to expedite delivery of replacement part orders.

Specify : 1. Model number/Serial number
2. Part number and Description
3. Quantity

Unless full information is supplied, delay in execution of orders will result.

⚠ : Critical components

MARK	B	C	D	F	G	J	K
TOLERANCE (%)	± 0.1	± 0.25	± 0.5	± 1	± 2	± 5	± 10

MARK	M	N	V	X	Z	P	Q
TOLERANCE (%)	± 20	± 30	+ 10 − 10	+ 40 − 20	+ 80 − 20	+ 100 − 0	+ 30 − 10

MARK	B	C	D	F	G
TOLERANCE (pF)	± 0.1	± 0.25	± 0.5	± 1	± 2

SYMBOL NO.	PARTS NO.	PARTS NAME	DESCRIPTION
		INTEGRATED CIRCUITS	
IC101	272P499010	IC	HA11465A
IC102	272P529010	IC	L78N09
IC103	272P086020	IC	MB40576PF
IC104	272P087020	IC	MB40776PF/MB40776HPF
IC105	272P151010	IC	NJM2217L
IC107	263P485010	IC	MC74HC00AF
IC108	272P773010	IC	SN74LS221NS
IC110	272P603010	IC	NJM78L05A
IC202	274P401010	IC	μPD65647GD-020-5BD
IC203	274P399010	IC	HM514260ALZ-7
IC204	274P399010	IC	HM514260ALZ-7
IC205	263P185010	IC	μPD65050GF-126-3B9
IC206	274P398010	IC	M5M5256BFP-85
IC207	263P599010	IC	M62352GP
IC301	263P748010	IC	M50734SP
IC303	274P400030	IC	HN27C256AG-12
IC304	263P198010	IC	LC3564PM
IC305	272P357010	IC	PST529C (T529C)
IC308	272P175010	IC	M54567P
IC309	274P397010	IC	BR93LC56F
IC901	272P564010	IC	M51977P
IC951	272P240010	IC	M5237L
IC952	272P500010	IC	HA17431P
IC971	270P153010	IC	MC34063AP1
IC972	270P153010	IC	MC34063AP1
		TRANSISTORS	
Q 101	260P804030	CHIP TRANSISTOR	2SC3052-G
Q 102	260P804030	CHIP TRANSISTOR	2SC3052-G
Q 103	260P804030	CHIP TRANSISTOR	2SC3052-G
Q 104	260P806010	CHIP TRANSISTOR	DTA124EK
Q 105	260P849010	CHIP TRANSISTOR	IMZ1
Q 106	260P849010	CHIP TRANSISTOR	IMZ1
Q 107	260P849010	CHIP TRANSISTOR	IMZ1
Q 108	260P849010	CHIP TRANSISTOR	IMZ1
Q 109	260P802020	CHIP TRANSISTOR	2SA1235-F
Q 110	260P807010	CHIP TRANSISTOR	DTC124EK
Q 301	260P802020	CHIP TRANSISTOR	2SA1235-F
Q 302	260P802020	CHIP TRANSISTOR	2SA1235-F
Q 303	260P852010	CHIP TRANSISTOR	FMG2
Q 304	260P852010	CHIP TRANSISTOR	FMG2
Q 305	260P852010	CHIP TRANSISTOR	FMG2
Q 306	260P852010	CHIP TRANSISTOR	FMG2
Q 307	260P852010	CHIP TRANSISTOR	FMG2
Q 308	260P852010	CHIP TRANSISTOR	FMG2
Q 309	260P849010	CHIP TRANSISTOR	IMZ1
Q 310	260P849010	CHIP TRANSISTOR	IMZ1
Q 311	260P849010	CHIP TRANSISTOR	IMZ1
Q 312	260P849010	CHIP TRANSISTOR	IMZ1
Q 313	260P804030	CHIP TRANSISTOR	2SC3052-G
Q 314	260P804030	CHIP TRANSISTOR	2SC3052-G
Q 315	260P807010	CHIP TRANSISTOR	DTC124EK
Q 316	260P807010	CHIP TRANSISTOR	DTC124EK
Q 317	260P807010	CHIP TRANSISTOR	DTC124EK
Q 318	260P807010	CHIP TRANSISTOR	DTC124EK
Q 319	260P807010	CHIP TRANSISTOR	DTC124EK
Q 322	260P806010	CHIP TRANSISTOR	DTA124EK
Q 323	260P806010	CHIP TRANSISTOR	DTA124EK
Q 324	260P804030	CHIP TRANSISTOR	2SC3052-G
⚠ Q 901	260P700020	TRANSISTOR	2SK1462
Q 952	260P642030	TRANSISTOR	2SB883
		DIODES	
D 101	264P803010	CHIP DIODE	MC2838
D 102	264P803010	CHIP DIODE	MC2838
D 301	264P816050	CHIP DIODE	RD7.5MB2
D 302	264P803010	CHIP DIODE	MC2838
D 303	264P816050	CHIP DIODE	RD7.5MB2
D 304	264P816050	CHIP DIODE	RD7.5MB2
D 701	264P579020	LIGHT EMITTING DIODE	GL9E030
D 702	264P579020	LIGHT EMITTING DIODE	GL9E030
⚠ D 901	264P535010	DIODE	RBV-608
D 903	264P578010	DIODE	RG 2A
D 905	264P522010	DIODE	RU 1P
D 951	264P580010	DIODE	ESAC92M-02
D 957	264P045040	DIODE	1S2471
D 971	264P657010	DIODE	EK14V
D 972	264P657010	DIODE	EK14V
D 973	264P470060	DIODE	RD33EB2
D 974	264P045040	DIODE	1S2471
D 975	264P484040	DIODE	RD5.6FB3
D 976	264P045040	DIODE	1S2471
D 977	264P489010	DIODE	RD16FB1
D 978	264P045040	DIODE	1S2471
		FILTERS	
CF201	299P185010	CERAMIC RESONATOR	CSA20.00MXZ04
		COILS	
L 101	349P064020	TRAP COIL	3.58MHz
L 102	320P022020	TRAP COIL	4.43MHz
L 103	325C261030	PEAKING COIL	10μH-K
L 105	349P179050	OSCILLATOR COIL	
L 107	325C261030	PEAKING COIL	10μH-K
L 203	325C140090	CHIP COIL	4.7μH-M
⚠ L 901	351P047080	LINE FILTER	ELF-18D850T
L 951	351P114010	COIL	TM05141N7
L 970	411D021010	FERRITE CORE FILTER	
L 971	411D021010	FERRITE CORE FILTER	
L 972	411D021010	FERRITE CORE FILTER	
L 973	351P113010	COIL	220μH-K 1.1A
L 974	351P113010	COIL	220μH-K 1.1A
		TRANSFORMERS	
⚠ T 901	350P501010	POWER	

SYMBOL NO.	PARTS NO.	PARTS NAME	DESCRIPTION
		VARIABLE RESISTORS	
VR102	127C490080	VR-SEMIFIXED	1/5W B10kΩ+-25%
VR103	127C491000	VR-SEMIFIXED	1/5W B30kΩ+-25%
VR104	127C390080	VR-SEMIFIXED	1/5W B10kΩ-M
VR951	127C490090	VR-SEMIFIXED	1/5W B20kΩ+-25%
VR971	127C490070	VR-SEMIFIXED	1/5W B5kΩ+-25%
		RESISTORS	
R 100	103P470050	CHIP RESISTOR	1/10W 150Ω-F
R 101	103P404010	CHIP RESISTOR	1/10W 22kΩ-J
R 102	103P402050	CHIP RESISTOR	1/10W 1kΩ-J
R 103	103P402050	CHIP RESISTOR	1/10W 1kΩ-J
R 104	103P472030	CHIP RESISTOR	1/10W 820kΩ-F
R 105	103P402050	CHIP RESISTOR	1/10W 1kΩ-J
R 106	103P404010	CHIP RESISTOR	1/10W 22kΩ-J
R 107	103P403070	CHIP RESISTOR	1/10W 10kΩ-J
R 108	103P472050	CHIP RESISTOR	1/10W 1kΩ-F
R 109	103P404020	CHIP RESISTOR	1/10W 27kΩ-J
R 110	103P402050	CHIP RESISTOR	1/10W 1kΩ-J
R 111	103P403070	CHIP RESISTOR	1/10W 10kΩ-J
R 112	103P402050	CHIP RESISTOR	1/10W 1kΩ-J
R 113	103P402030	CHIP RESISTOR	1/10W 680Ω-J
R 114	103P404080	CHIP RESISTOR	1/10W 82kΩ-J
R 115	103P402050	CHIP RESISTOR	1/10W 1kΩ-J
R 116	103P474010	CHIP RESISTOR	1/10W 4.7kΩ-F
R 117	103P472050	CHIP RESISTOR	1/10W 1kΩ-F
R 118	103P473070	CHIP RESISTOR	1/10W 3.3kΩ-F
R 119	103P402050	CHIP RESISTOR	1/10W 1kΩ-J
R 120	103P402020	CHIP RESISTOR	1/10W 560Ω-J
R 121	103P402020	CHIP RESISTOR	1/10W 560Ω-J
R 122	103P404080	CHIP RESISTOR	1/10W 82kΩ-J
R 123	103P404000	CHIP RESISTOR	1/10W 18kΩ-J
R 124	103P404090	CHIP RESISTOR	1/10W 100kΩ-J
R 125	103P402040	CHIP RESISTOR	1/10W 820Ω-J
R 126	103P403070	CHIP RESISTOR	1/10W 10kΩ-J
R 127	103P403030	CHIP RESISTOR	1/10W 4.7kΩ-J
R 128	103P474090	CHIP RESISTOR	1/10W 10kΩ-F
R 129	103P475010	CHIP RESISTOR	1/10W 12kΩ-F
R 130	103P406010	CHIP RESISTOR	1/10W 1MΩ-J
R 131	103P402090	CHIP RESISTOR	1/10W 2.2kΩ-J
R 132	103P403070	CHIP RESISTOR	1/10W 10kΩ-J
R 133	103P474090	CHIP RESISTOR	1/10W 10kΩ-F
R 134	103P474090	CHIP RESISTOR	1/10W 10kΩ-F
R 135	103P402020	CHIP RESISTOR	1/10W 560Ω-J
R 136	103P403010	CHIP RESISTOR	1/10W 3.3kΩ-J
R 137	103P482010	CHIP METAL	1/4W 470Ω-J
R 138	103P409090	CHIP RESISTOR	1/10W 75Ω-J
R 139	103P404010	CHIP RESISTOR	1/10W 22kΩ-J
R 140	103P401090	CHIP RESISTOR	1/10W 330Ω-J
R 141	103P401090	CHIP RESISTOR	1/10W 330Ω-J
R 143	103P474050	CHIP RESISTOR	1/10W 6.8K
R 144	103P403060	CHIP RESISTOR	1/10W 8.2kΩ-J
R 146	103P470050	CHIP RESISTOR	1/10W 150Ω-F
R 147	103P402090	CHIP RESISTOR	1/10W 2.2kΩ-J

SYMBOL NO.	PARTS NO.	PARTS NAME	DESCRIPTION
R 158	103P402050	CHIP RESISTOR	1/10W 1kΩ-J
R 159	103P402050	CHIP RESISTOR	1/10W 1kΩ-J
R 162	103P402090	CHIP RESISTOR	1/10W 2.2kΩ-J
R 163	103P403080	CHIP RESISTOR	1/10W 12kΩ-J
R 201	103P401070	CHIP RESISTOR	1/10W 220Ω-J
R 202	103P401000	CHIP RESISTOR	1/10W 56Ω-J
R 203	103P401000	CHIP RESISTOR	1/10W 56Ω-J
R 204	103P401000	CHIP RESISTOR	1/10W 56Ω-J
R 205	103P401000	CHIP RESISTOR	1/10W 56Ω-J
R 206	103P401000	CHIP RESISTOR	1/10W 56Ω-J
R 207	103P401000	CHIP RESISTOR	1/10W 56Ω-J
R 208	103P401000	CHIP RESISTOR	1/10W 56Ω-J
R 209	103P401000	CHIP RESISTOR	1/10W 56Ω-J
R 210	103P401000	CHIP RESISTOR	1/10W 56Ω-J
R 211	103P401000	CHIP RESISTOR	1/10W 56Ω-J
R 212	103P401000	CHIP RESISTOR	1/10W 56Ω-J
R 213	103P401000	CHIP RESISTOR	1/10W 56Ω-J
R 214	103P401000	CHIP RESISTOR	1/10W 56Ω-J
R 215	103P401000	CHIP RESISTOR	1/10W 56Ω-J
R 216	103P401000	CHIP RESISTOR	1/10W 56Ω-J
R 217	103P401000	CHIP RESISTOR	1/10W 56Ω-J
R 218	103P401000	CHIP RESISTOR	1/10W 56Ω-J
R 219	103P401000	CHIP RESISTOR	1/10W 56Ω-J
R 220	103P401000	CHIP RESISTOR	1/10W 56Ω-J
R 221	103P401000	CHIP RESISTOR	1/10W 56Ω-J
R 222	103P401000	CHIP RESISTOR	1/10W 56Ω-J
R 223	103P401000	CHIP RESISTOR	1/10W 56Ω-J
R 224	103P401000	CHIP RESISTOR	1/10W 56Ω-J
R 225	103P401060	CHIP RESISTOR	1/10W 180Ω-J
R 303	103P401090	CHIP RESISTOR	1/10W 330Ω-J
R 304	103P401090	CHIP RESISTOR	1/10W 330Ω-J
R 305	103P401090	CHIP RESISTOR	1/10W 330Ω-J
R 306	103P401090	CHIP RESISTOR	1/10W 330Ω-J
R 307	103P401090	CHIP RESISTOR	1/10W 330Ω-J
R 308	103P401090	CHIP RESISTOR	1/10W 330Ω-J
R 309	103P401090	CHIP RESISTOR	1/10W 330Ω-J
R 310	103P401090	CHIP RESISTOR	1/10W 330Ω-J
R 311	103P402050	CHIP RESISTOR	1/10W 1kΩ-J
R 312	103P402050	CHIP RESISTOR	1/10W 1kΩ-J
R 313	103P408040	CHIP RESISTOR	1/10W 2.2Ω-K
R 314	103P403070	CHIP RESISTOR	1/10W 10kΩ-J
R 315	103P402090	CHIP RESISTOR	1/10W 2.2kΩ-J
R 316	103P402090	CHIP RESISTOR	1/10W 2.2kΩ-J
R 317	103P408040	CHIP RESISTOR	1/10W 2.2Ω-K
R 318	103P408040	CHIP RESISTOR	1/10W 2.2Ω-K
R 319	103P401060	CHIP RESISTOR	1/10W 180Ω-J
R 320	103P402050	CHIP RESISTOR	1/10W 1kΩ-J
R 321	103P402090	CHIP RESISTOR	1/10W 2.2kΩ-J
R 322	103P402090	CHIP RESISTOR	1/10W 2.2kΩ-J
R 323	103P401060	CHIP RESISTOR	1/10W 180Ω-J
R 324	103P404020	CHIP RESISTOR	1/10W 27kΩ-J
R 325	103P401030	CHIP RESISTOR	1/10W 100Ω-J
R 326	103P400070	CHIP RESISTOR	1/10W 33Ω-J
R 327	103P470050	CHIP RESISTOR	1/10W 150Ω-F
R 328	103P472050	CHIP RESISTOR	1/10W 1kΩ-F

SYMBOL NO.	PARTS NO.	PARTS NAME	DESCRIPTION
R 329	103P477030	CHIP RESISTOR	1/10W 100kΩ-F
R 330	103P473090	CHIP RESISTOR	1/10W 3.9kΩ-F
R 331	103P471010	CHIP RESISTOR	1/10W 270Ω-F
R 332	103P471010	CHIP RESISTOR	1/10W 270Ω-F
R 333	103P477030	CHIP RESISTOR	1/10W 100kΩ-F
R 334	103P475090	CHIP RESISTOR	1/10W 27kΩ-F
R 335	103P403070	CHIP RESISTOR	1/10W 10kΩ-J
R 337	103P403070	CHIP RESISTOR	1/10W 10kΩ-J
R 338	103P403070	CHIP RESISTOR	1/10W 10kΩ-J
R 339	103P403070	CHIP RESISTOR	1/10W 10kΩ-J
R 340	103P403070	CHIP RESISTOR	1/10W 10kΩ-J
R 341	103P400010	CHIP RESISTOR	1/10W 10Ω-J
R 342	103P475050	CHIP RESISTOR	1/10W 18kΩ-F
R 343	103P402080	CHIP RESISTOR	1/10W 1.8kΩ-J
R 344	103P402080	CHIP RESISTOR	1/10W 1.8kΩ-J
R 345	103P402080	CHIP RESISTOR	1/10W 1.8kΩ-J
R 346	103P402050	CHIP RESISTOR	1/10W 1kΩ-J
R 347	103P403070	CHIP RESISTOR	1/10W 10kΩ-J
R 348	103P403070	CHIP RESISTOR	1/10W 10kΩ-J
R 349	103P403070	CHIP RESISTOR	1/10W 10kΩ-J
R 350	103P403070	CHIP RESISTOR	1/10W 10kΩ-J
R 351	103P403070	CHIP RESISTOR	1/10W 10kΩ-J
R 352	103P403070	CHIP RESISTOR	1/10W 10kΩ-J
R 353	103P403070	CHIP RESISTOR	1/10W 10kΩ-J
R 354	103P403070	CHIP RESISTOR	1/10W 10kΩ-J
R 355	103P403070	CHIP RESISTOR	1/10W 10kΩ-J
R 357	103P404010	CHIP RESISTOR	1/10W 22kΩ-J
R 358	103P404010	CHIP RESISTOR	1/10W 22kΩ-J
R 359	103P404010	CHIP RESISTOR	1/10W 22kΩ-J
R 360	103P404010	CHIP RESISTOR	1/10W 22kΩ-J
R 361	103P408040	CHIP RESISTOR	1/10W 2.2Ω-K
R 362	103P400010	CHIP RESISTOR	1/10W 10Ω-J
R 364	103P403070	CHIP RESISTOR	1/10W 10kΩ-J
R 365	103P409050	CHIP RESISTOR	1/10W 0Ω
		CAPACITORS AND TRIMMERS	
C 105	154P330080	CHIP CAPACITOR	CH50V 7pF-C
C 106	154P330030	CHIP CAPACITOR	CK50V 2pF-C
C 107	154P330030	CHIP CAPACITOR	CK50V 2pF-C
C 111	141P135080	CHIP CAPACITOR	F25V 0.1μF-Z
C 114	141P130090	CHIP CAPACITOR	B50V 1000pF-K
C 115	141P130090	CHIP CAPACITOR	B50V 1000pF-K
C 117	141P135080	CHIP CAPACITOR	F25V 0.1μF-Z
C 118	141P135080	CHIP CAPACITOR	F25V 0.1μF-Z
C 119	141P135080	CHIP CAPACITOR	F25V 0.1μF-Z
C 120	141P135080	CHIP CAPACITOR	F25V 0.1μF-Z
C 122	154P331010	CHIP CAPACITOR	CH50V 10pF-C
C 123	141P135080	CHIP CAPACITOR	F25V 0.1μF-Z
C 124	154P335090	CHIP CAPACITOR	CH50V 1000pF-J
C 125	141P139030	CHIP CAPACITOR	B25V 0.1μF-K
C 137	141P135080	CHIP CAPACITOR	F25V 0.1μF-Z
C 139	154P335010	CHIP CAPACITOR	CH50V 470pF-J
C 140	154P335010	CHIP CAPACITOR	CH50V 470pF-J
C 142	141P135080	CHIP CAPACITOR	F25V 0.1μF-Z
C 143	154P331090	CHIP CAPACITOR	CH50V 22pF-J
C 145	141P135080	CHIP CAPACITOR	F25V 0.1μF-Z

SYMBOL NO.	PARTS NO.	PARTS NAME	DESCRIPTION
C 146	154P331030	CHIP CAPACITOR	CH50V 12pF-J
C 147	141P135080	CHIP CAPACITOR	F25V 0.1μF-Z
C 201	154P331050	CHIP CAPACITOR	CH50V 15pF-J
C 202	154P331050	CHIP CAPACITOR	CH50V 15pF-J
C 210	141P135080	CHIP CAPACITOR	F25V 0.1μF-Z
C 211	141P135080	CHIP CAPACITOR	F25V 0.1μF-Z
C 212	141P135080	CHIP CAPACITOR	F25V 0.1μF-Z
C 213	141P135080	CHIP CAPACITOR	F25V 0.1μF-Z
C 214	141P135080	CHIP CAPACITOR	F25V 0.1μF-Z
C 215	141P135080	CHIP CAPACITOR	F25V 0.1μF-Z
C 218	141P135080	CHIP CAPACITOR	F25V 0.1μF-Z
C 219	141P135080	CHIP CAPACITOR	F25V 0.1μF-Z
C 220	141P135080	CHIP CAPACITOR	F25V 0.1μF-Z
C 305	141P132010	CHIP CAPACITOR	B50V 0.01μF-K
C 306	141P132010	CHIP CAPACITOR	B50V 0.01μF-K
C 308	141P135080	CHIP CAPACITOR	F25V 0.1μF-Z
C 309	141P132010	CHIP CAPACITOR	B50V 0.01μF-K
C 310	141P132010	CHIP CAPACITOR	B50V 0.01μF-K
C 311	141P132010	CHIP CAPACITOR	B50V 0.01μF-K
C 312	141P135080	CHIP CAPACITOR	F25V 0.1μF-Z
C 313	141P135080	CHIP CAPACITOR	F25V 0.1μF-Z
C 314	141P135080	CHIP CAPACITOR	F25V 0.1μF-Z
⚠ C 901	189P113010	C-M-P-AC	AC125V 0.47μF-M
C 904	189P075010	C-M-PLASTIC-PP	800V 0.01μF-J
⚠ C 905	189P153060	C-M-P-AC	AC250V 0.22μF-M
⚠ C 906	189P094050	C-CERAMIC-AC	ACT4K E 1000pF-M
⚠ C 907	189P094050	C-CERAMIC-AC	ACT4K E 1000pF-M
⚠ C 908	185D056040	ELECTROLYTIC-C	H400V 330μF-M
⚠ C 914	189P027050	C-CERAMIC-AC	F VA1 2200pF-M
		SWITCHES	
	702C916010	CASE SWITCH	
	439C035020	SWITCH	6P (FEED, COPY,)
S 101	431C078020	DIP SWITCH	DIP 10KEY TATEGATA
S 701	432P101010	KEY BOARD SWITCH	PRINT
⚠ S 901	432C067010	PUSH SWITCH	POWER AC250V 5A
		MISCELLANEOUS	
	460P156010	HEAD	KST-100-12MPL19-MB
⚠	451C121010	POWER JACK(3P)	INLET-AC-3P
	243C099070	CARD LEAD	29P L=130
	449P013090	IC SOCKET	28PIN
	288P104010	STEP MOTOR	DC12V 2.5W
BZ301	286P011010	BUZZER	PKM22EPP-4001
⚠ F 901	283D047060	FUSE	T3.15A
⚠ F 902	283D047060	FUSE	T3.15A
J 101	452D199010	CONNECTOR-BNC	
J 102	452D199010	CONNECTOR-BNC	
J 301	451C066010	JACK	
K 101	287P058030	RELAY	G5A-237P DC12V
⚠ PC901	268P049020	PHOTO COUPLER	TLP732
⚠ PC902	268P049020	PHOTO COUPLER	TLP732
R 301	265P800010	VARISTOR	5V 2125
R 302	265P800010	VARISTOR	5V 2125
⚠ RT901	265P099010	THERMISTOR	16D-13F2

SYMBOL NO.	PARTS NO.	PARTS NAME	DESCRIPTION
TP 1	299P136010	TEST POINT	2125
TP 2	299P136010	TEST POINT	2125
TP 3	299P136010	TEST POINT	2125
TP 4	299P136010	TEST POINT	2125
TP 5	299P136010	TEST POINT	2125
TP 6	299P136010	TEST POINT	2125
TP 30	299P136010	TEST POINT	2125
TP 31	299P136010	TEST POINT	2125
TP 32	299P136010	TEST POINT	2125
		PRINTED CIRCUIT BOARD ASSY'S	
⚠	936B046003	MAIN PCB ASSY	
⚠	936C057001	POWER PCB ASSY	
⚠	936D012002	SENSOR-PS PCB ASSY	
⚠	936D011003	SENSOR-SH PCB ASSY	
		MECHANICAL PARTS	
	956C017001	GEAR ASSY	
	621C029010	CAM	
	596D447010	CAM LEVER	
	596D408010	GEAR DAMPER	
	621D746010	GEAR MO	
	621D748010	GEAR S	
	621D747010	GEAR W	
	621D745010	PAPER CORE	PA6
	685C002030	RETAINING RING	E1.5
	685C002040	RETAINING RING	ES-2
	685C002060	RETAINING RING	E-3
	669D220020	SCREW	3X8 46LA005
	669D212020	SCREW	3X8 83AF
	669D229010	SCREW	M3X6 46LA005
	299P052050	SENSOR-H	CONNECT(DS)L=130
	572D478010	SPRING HEAD	
	572D476010	SPRING LEVER	(U)
	572D476020	SPRING LEVER	(L)
	572D488010	SPRING LOCK	
	442D111010	TERMINAL EARTH	
		COSMETIC PARTS	
⚠	242C795090	AC POWER CORD	
	956D001001	PLATEN ASSY	
	621D743010	BUSHING	(R)
	621D743020	BUSHING	(L)
	734D516020	BUTTON OPE	
	734D517020	BUTTON POWER	
	596D893090	CABINET ASSY	
	702C921090	DOOR	
	761C273010	DOOR CATCH	LSEQ0003
	734D518010	CONTROL KNOB	
	771D051010	PAD	
	572D477010	SPRING DOOR	
	701A478010	PANEL F UNIT	
	939C028040	PRINTER UNIT	

SYMBOL NO.	PARTS NO.	PARTS NAME	DESCRIPTION
		PACKING PARTS AND ACCESSORY	
	242D232010	CABLE-BNC	BNC-BNC 2.0m
	857P003040	CLEANING PAPER	
	803B673010	PACKING CUSHION	
	641C474010	DAMPER	
	871C839020	INSTRUCTION BOOK	
	801C050080	PACKING CASE	
	831D169010	PACKING BAG	200X95
	831D183040	PACKING BAG	400X270
	831D246030	PACKING SHEET	700X700X0.5
	939P414010	WIRED REMOTE HAND UNIT	

PACKING PARTS

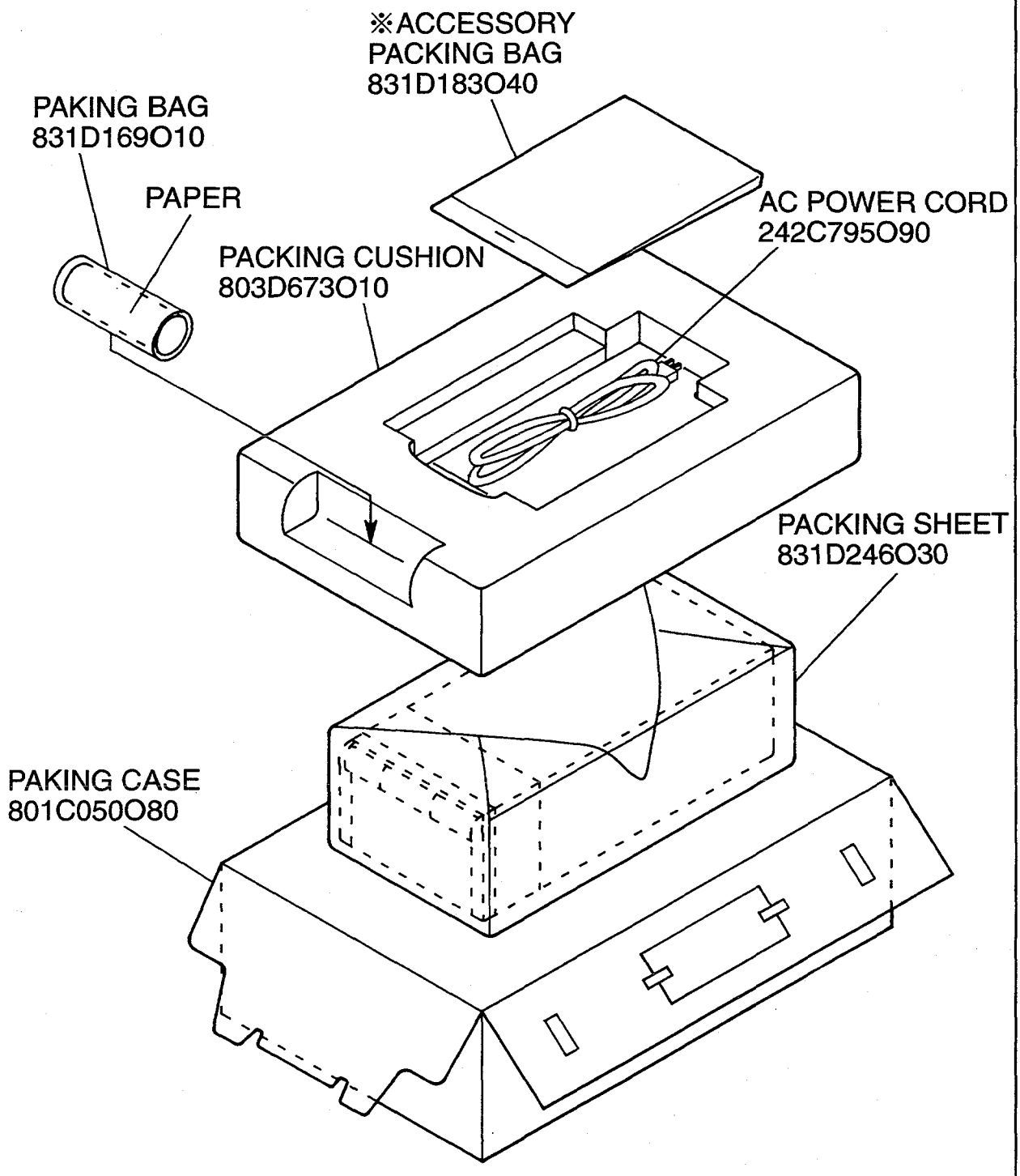

※ACCESSORY

BNC CABLE (2m)	242D232O10
REMOTE HAND UNIT	939P414O10
INSTRUCTION BOOK	871C839O20
CLEANING PAPER	857P003O40

EXPLODED VIEW

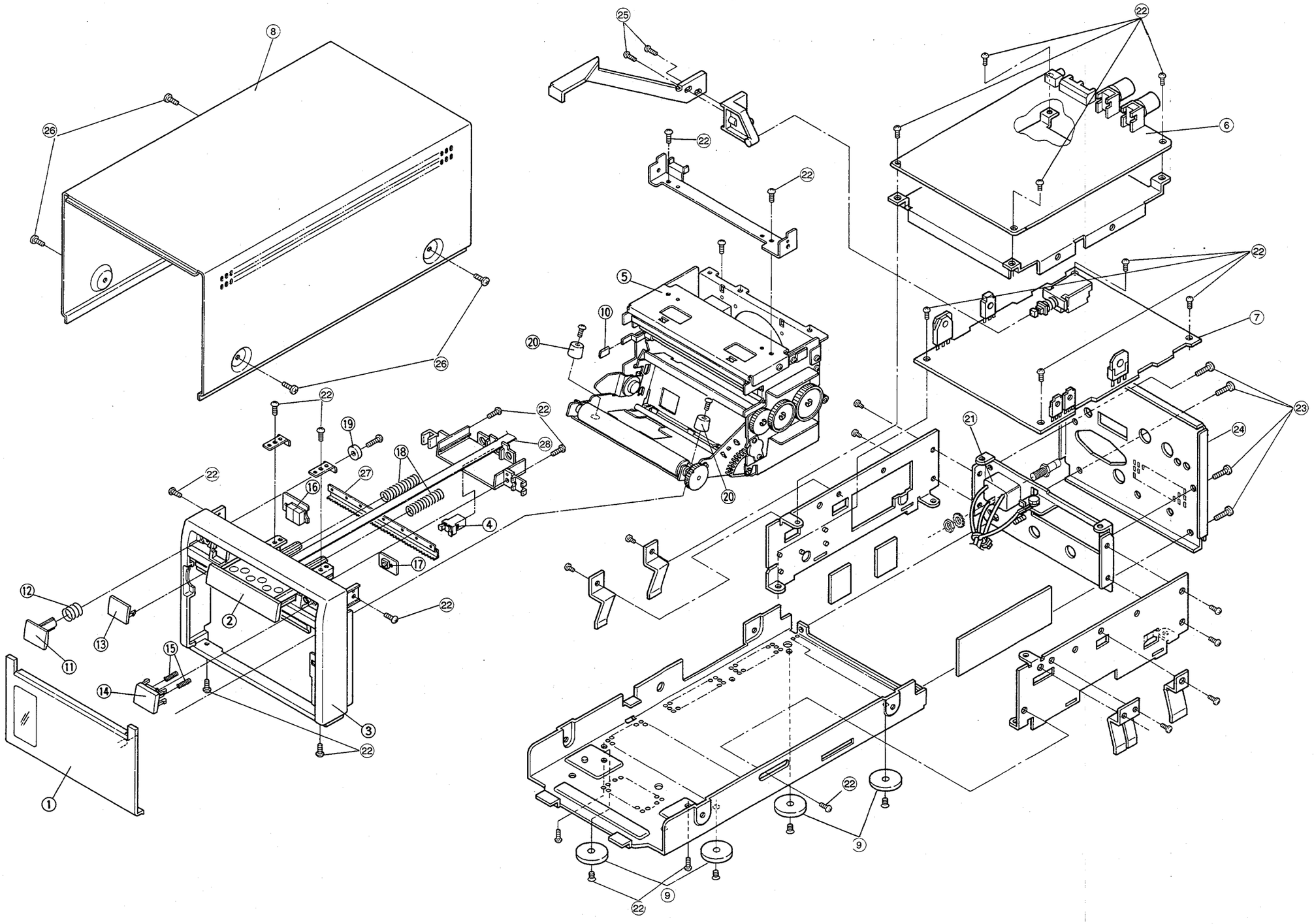

PARTS L

In order to exped
Specify : 1. Mod
2. Part
3. Qua
Unless full inform

⚠ : Critical cor

SYMBOL NO.	PARTS NO.
1	702C9210
2	702C9160
3	701A4780
4	761C2730
5	939C0280
⚠ 6	936B0460
⚠ 7	936C0570
8	596D8930
9	771D0510
10	734D5180
11	734D5170
12	☆
13	☆
14	734D5160
15	☆
⚠ 16	☆
⚠ 17	☆
18	☆
19	☆
20	☆
⚠ 21	451D1210
22	669D2290
23	669D2120
24	☆
25	669D2200
26	☆
27	☆
28	243C0990

☆:Not a
stock
item

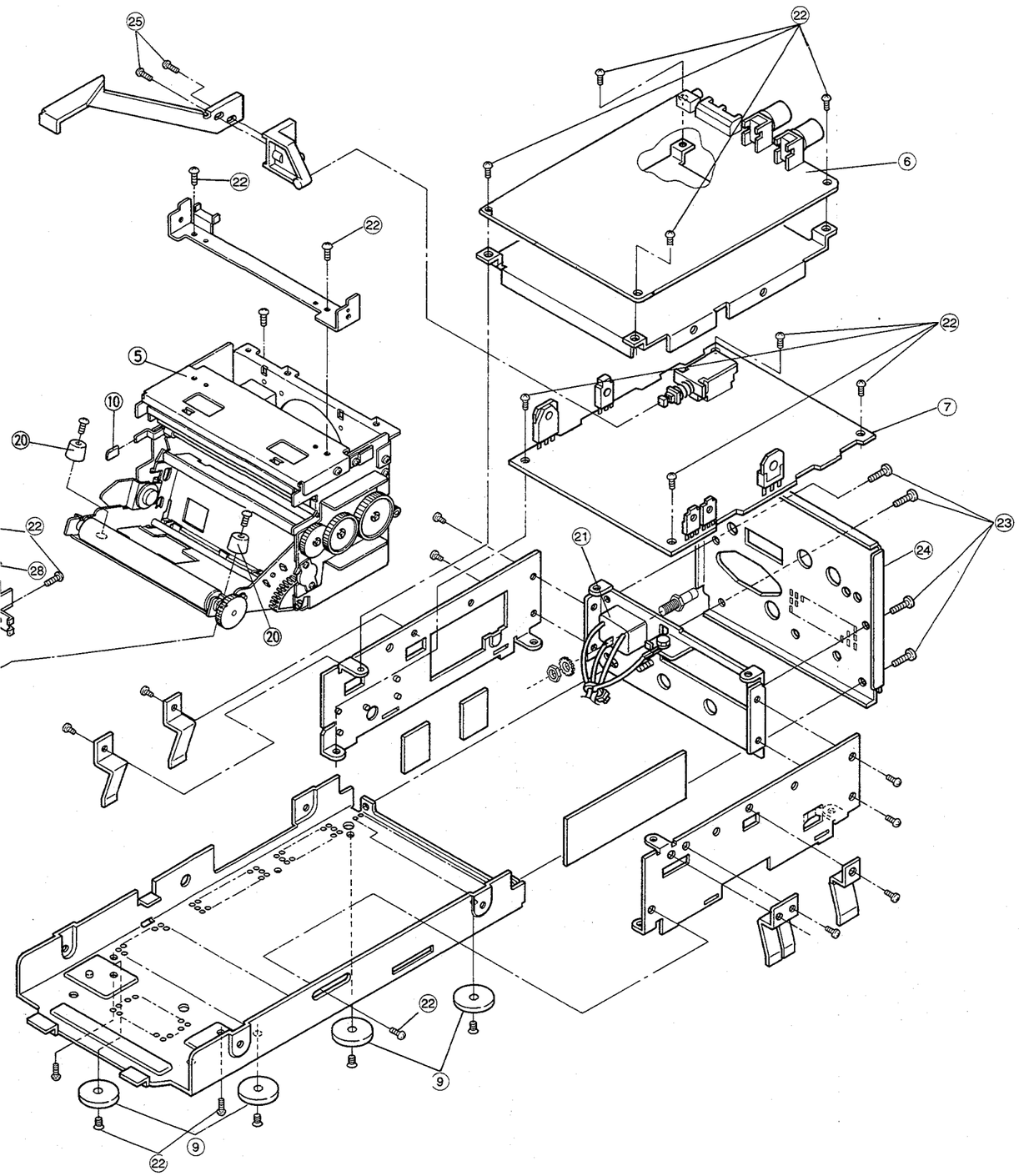

PARTS LIST

In order to expedite delivery of replacement part orders.
Specify : 1. Model number/Serial number
2. Part number and Description
3. Quantity
Unless full information is supplied, delay in execution of orders will result.

⚠ : Critical components

SYMBOL NO.	PARTS NO.	ADDRESS		PARTS NAME	DESCRIPTION
1	702C921090	E-1		DOOR	
2	702C916010	D-2		CASE SWITCH	
3	701A478010	D-2		PANEL F UNIT	
4	761C273010	C-3		DOOR CATCH	LSEQ0003
5	939C028040	B-4		PRINTER UNIT	
⚠ 6	936B046003	A-7		MAIN PCB ASSY	
⚠ 7	936C057001	B-7		POWER PCB ASSY	
8	596D893090	A-2		CABINET ASSY	
9	771D051010	E-4	E-5	PAD	
10	734D518010	B-4		CONTROL KNOB	
11	734D517020	D-1		BUTTON POWER	
12	☆	C-1		WIRE SPRING	(570D582040)
13	☆	D-1		SEGMENT INLAY	(702D223010)
14	734D516020	D-1		BUTTON OPE	
15	☆	D-1		SPRING KNOB	(572D224010)
⚠ 16	☆	C-2		LED PCB ASSY	(936C005001)
⚠ 17	☆	C-3		SW PCB ASSY	(936C004001)
18	☆	C-3		SPRING	(572D450010)
19	☆	C-2		BUTTON STOPPER	(641D834010)
20	☆	B-3	C-4	CAP	(761D647010)
⚠ 21	451D121010	C-5		AC POWER JACK(3P)	INLET-AC-3P
22	669D229010	C-2	C-3	SCREW	M3X6 46LA005
		A-4	A-6		
		B-7	E-3		
		D-4			
23	669D212020	C-7		SCREW	3X8 83AF
24	☆	C-7		REAR PANEL	(591B984010)
25	669D220020	A-3		SCREW	3X8 46LA005
26	☆	A-1	B-3	SCREW	(669D323070)
27	☆	C-2		CUTTER	(596D588010)
28	243C099070	C-3		CARD LEAD	29P L=130

☆:Not a stocked item

■ : APPLY GEAR GREASE

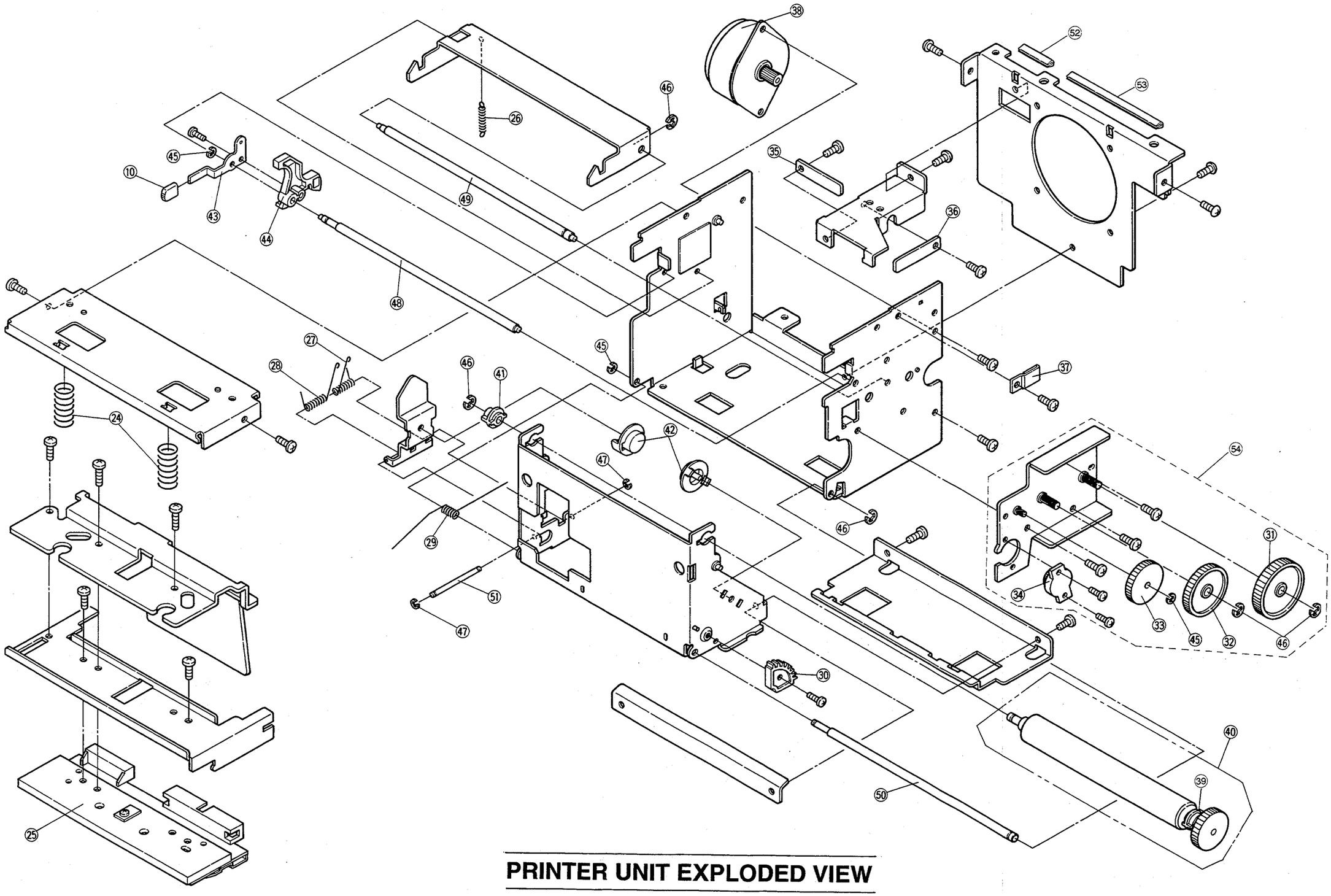

PRINTER UNIT EXPLODED VIEW

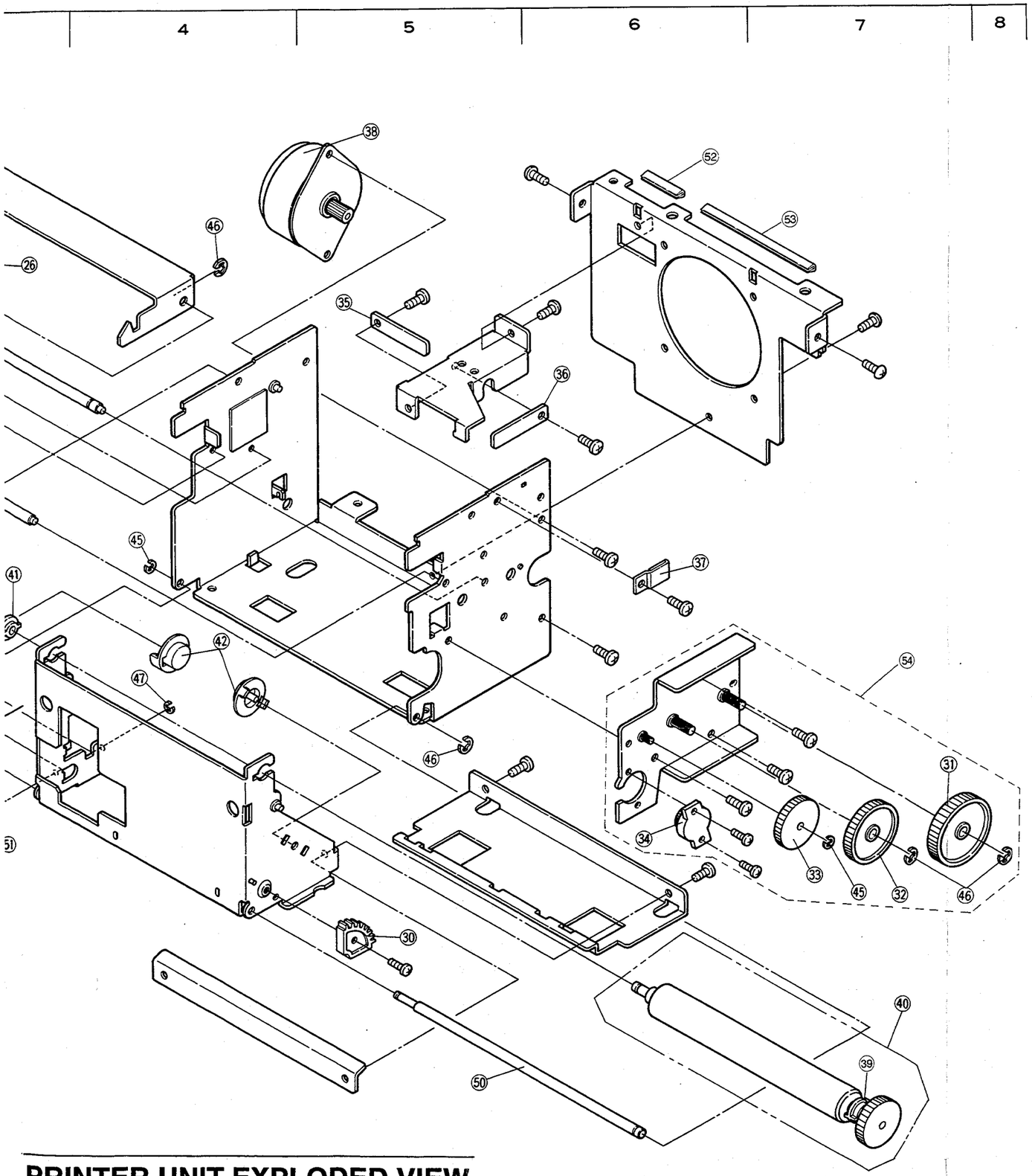

PRINTER UNIT EXPLODED VIEW

SYMBOL NO.	PARTS NO.	ADDRESS		PARTS NAME	DESCRIPTION
10	734D518010	B-1		CONTROL KNOB	
24	572D478010	C-1		SPRING HEAD	
25	460P156010	E-1		HEAD	KST-100-12MPL19-MB
26	572D488010	A-3		SPRING LOCK	
27	572D476010	C-2		SPRING LEVER	(U)
28	572D476020	C-2		SPRING LEVER	(L)
29	572D477010	D-3		SPRING DOOR	
30	596D408010	D-5		GEAR DAMPER	
31	621D746010	D-7		GEAR MO	
32	621D747010	D-7		GEAR W	
33	621D748010	D-7		GEAR S	
34	641C474010	D-6		DAMPER	
⚠ 35	936D012002	B-5		SENSOR-PS PCB ASSY	
⚠ 36	936D011003	B-6		SENSOR-SH PCB ASSY	
37	299P052050	C-6		SENSOR-H	CONNECT<DS>L=130
38	288P104010	A-5		STEP MOTOR	DC12V 2.5W
40	956D001001	E-7		PLATEN ASSY	
41	621D743010	C-3	E-7	BUSHING	(R)
42	621D745010	C-4		PAPER CORE PA6	
43	596D447010	B-2		CAM LEVER	
44	621C029010	B-2		CAM	
45	685C002040	B-2	C-4	RETAINING RING	ES-2
		D-7			
46	685C002060	A-4	C-3	RETAINING RING	E-3
		D-5	D-8		
47	685C002030	C-4	D-3	RETAINING RING	E1.5
48	☆	B-3		CAM SHAFT	(531D221010)
49	☆	B-3		LOCK-SHAFT	(531D219010)
50	☆	E-5		PAPER-SHAFT	(531D218010)
51	☆	D-3		LEVER SHAFT	(531D216010)
52	☆	A-6		EDGE-GUARD	(621D817010)
53	☆	A-6		EDGE-GUARD	(621D817020)

☆:Not a stocked item

SCT–P67/P67U/P67E BLOCK DIAGRAM (MAIN PCB, PRINTER MECHANICAL UNIT)

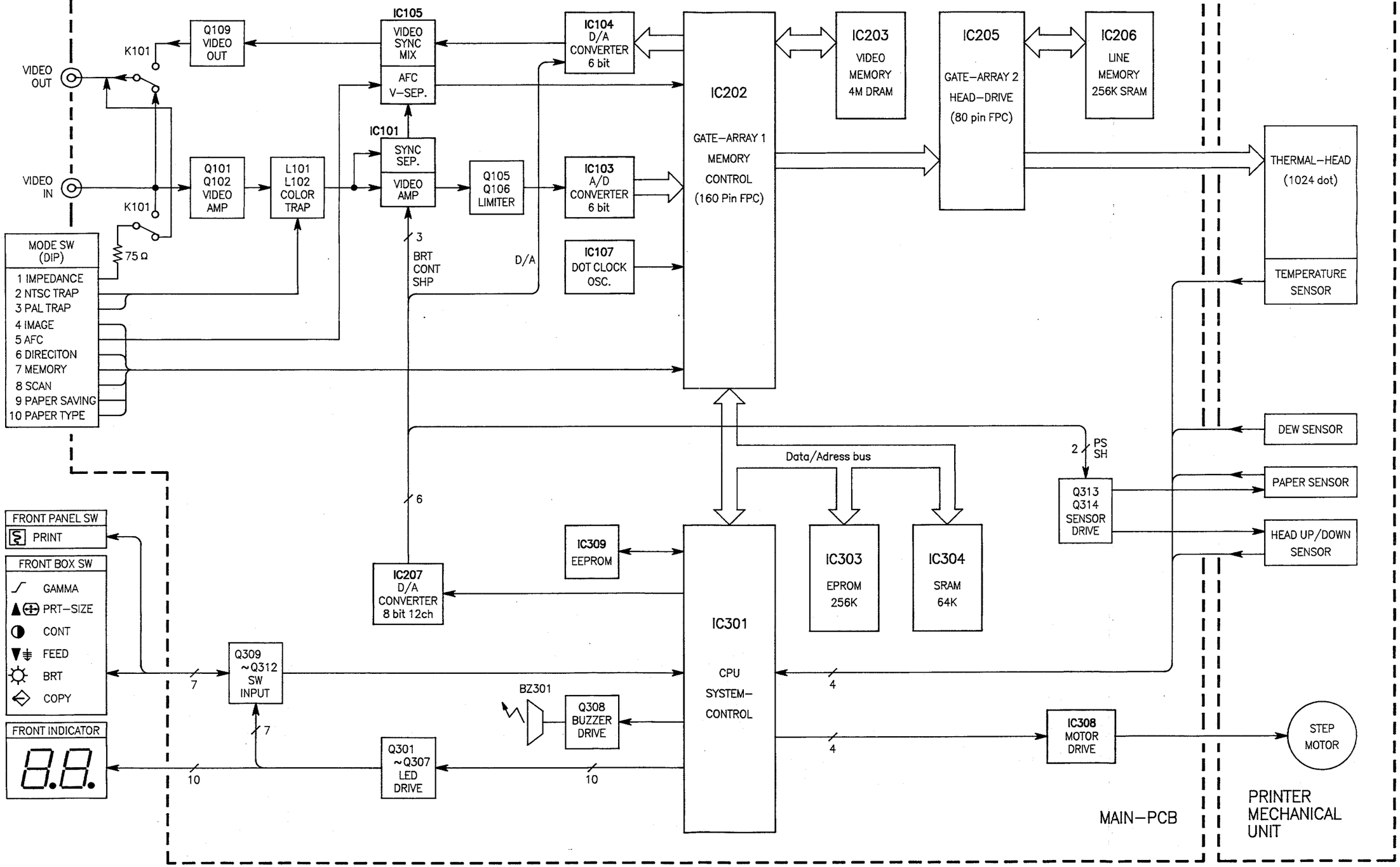

(P67601)

SCT-P67/P67U/P67E BLOCK DIAGRAM
(POWER SUPPLY SYSTEM)

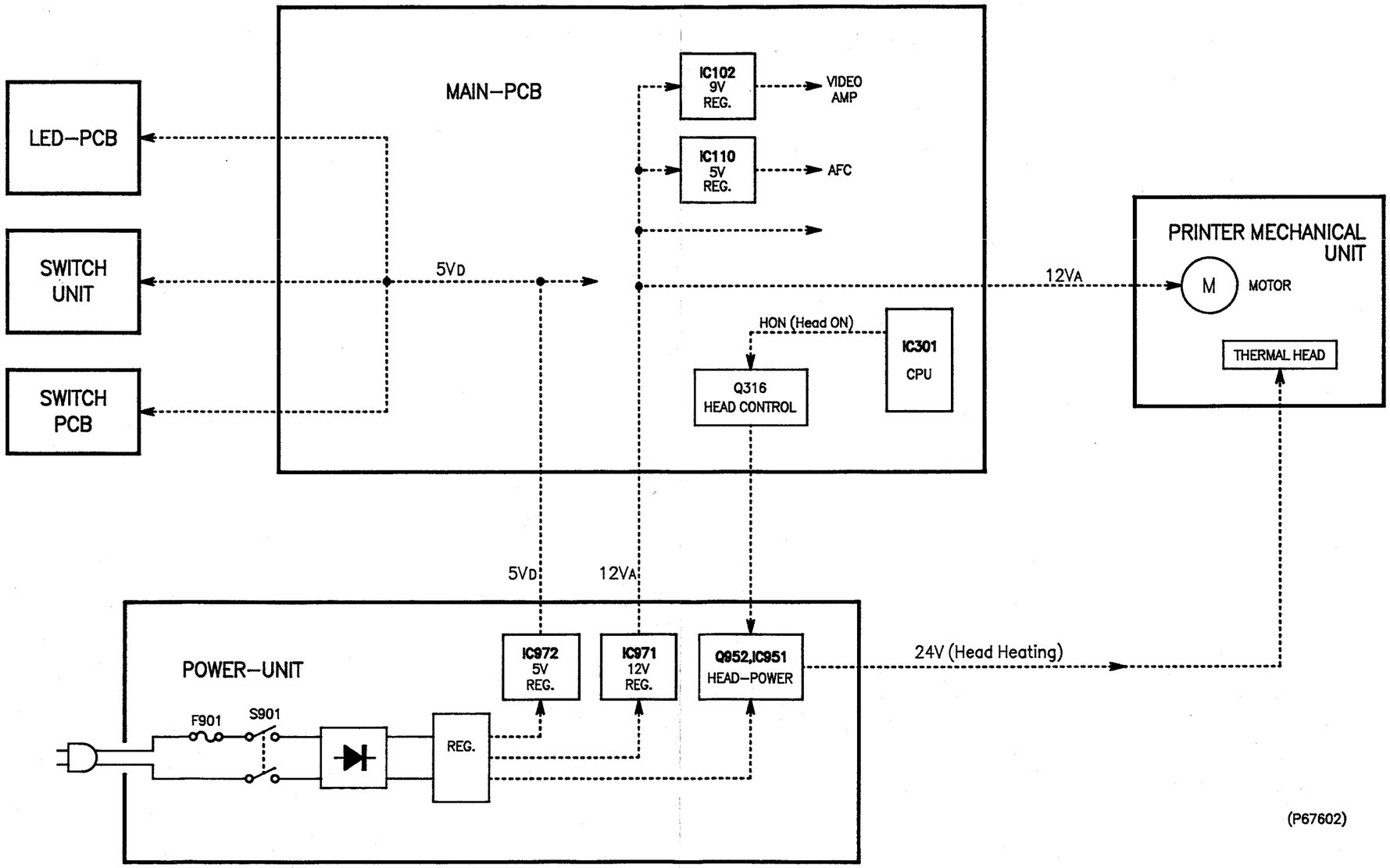

(P67602)

HOUSING-2

PCB-LED

L1

L2

LD

GAMMA
PRT-SIZE/UP
CONTRAST
FEED/DOWN
BRIGHT
COPY

SW-UNIT

CONNECTOR-UD

SW

HOUSING-2

PRINT

PCB-SW

PR

SENSOR-H

DS

PCB-SENSOR

PS

PCB-SENSOR

SH

⚠ PCB-MAIN

COPY
PRINT

VIDEO
IN
(BNC)

VIDEO
OUT
(BNC)

REMOTE-JACK

PRINT

REMOTE-UNIT

S101
SW-DIP 10P

MODE-SW

10	PAPER TYPE	SUPER/HD
9	PAPER SAV	ON/OFF
8	SCAN	OVER/UNDER
7	MEMORY	Field/Frame
6	DIRECTION	REV./NOR.
5	AFC	ON/OFF
4	IMAGE	NEGA/POSI
3	4.43M TRAP	ON/OFF
2	3.58M TRAP	ON/OFF
1	IMPEDANCE	75Ω/H

—IC B

IC104 MB40776PF/MB4077

CLK

MASTER
SLAVE
REGISTER

BUFF

GND

—IC BLOCK DIAGRAM FOR PCB-MAIN—

REMOTE-JACK

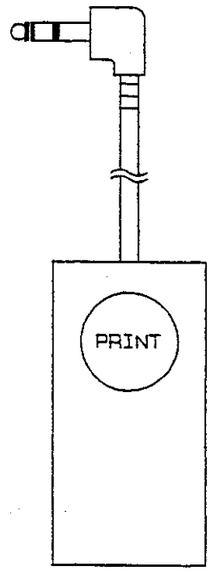

REMOTE-UNIT

MODE-SW

E SUPER/HD

ON/OFF

OVER/UNDER

Field/Frame

REV./NOR.

ON/OFF

NEGA/POSI

P ON/OFF

P ON/OFF

75Ω/H

IC104 MB40776PF/MB40776HPF

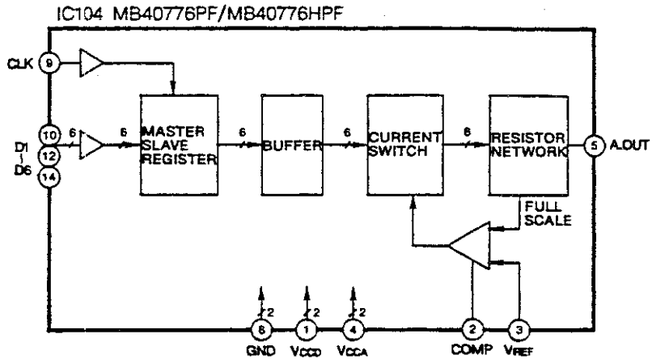

IC103 MB40576PF

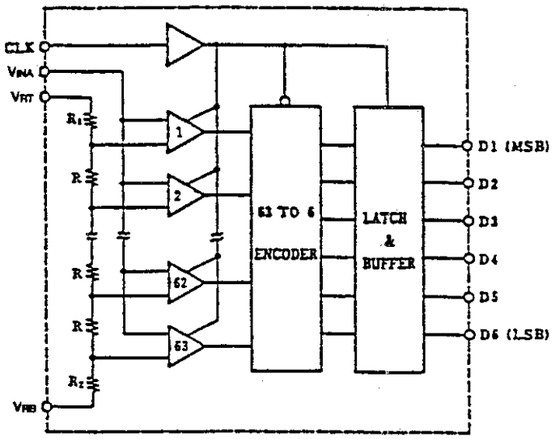

IC206 M5M5256BFP-85/μPD43256AGU-85LL

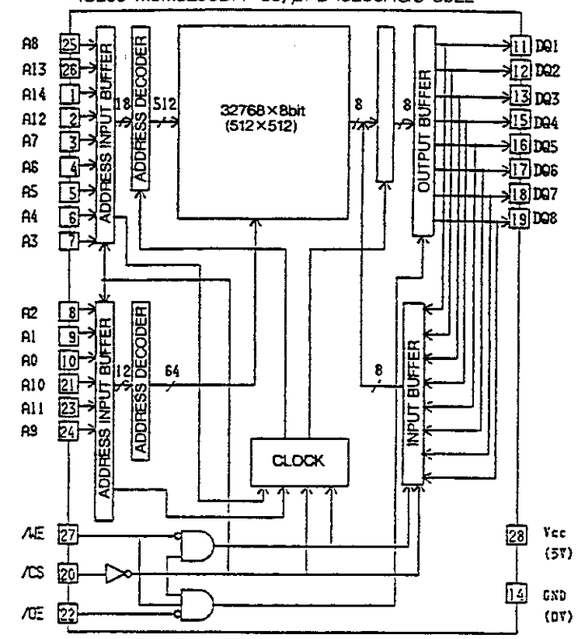

A_0–A_{14} : ADDRESS
I/O_1–I/O_8 : DATA I/O
$\overline{CS}$: CHIP SELECTIVE INPUT
$\overline{WE}$: WRITE ENABLE
$\overline{OE}$: OUTPUT ENABLE
V_{CC} : +5V
GND : GROUND

OPERATING MODE

$\overline{CS}$	$\overline{OE}$	$\overline{WE}$	MODE	OUT	I
H	×	×	NON-SELECTING	HIGH Z	I_{SB}
L	H	H	OUTPUT DISABLE		
L	L	H	READ	D_{OUT}	I_{CCA}
L	×	L	WRITE	D_{IN}	

IC301 M50734SP

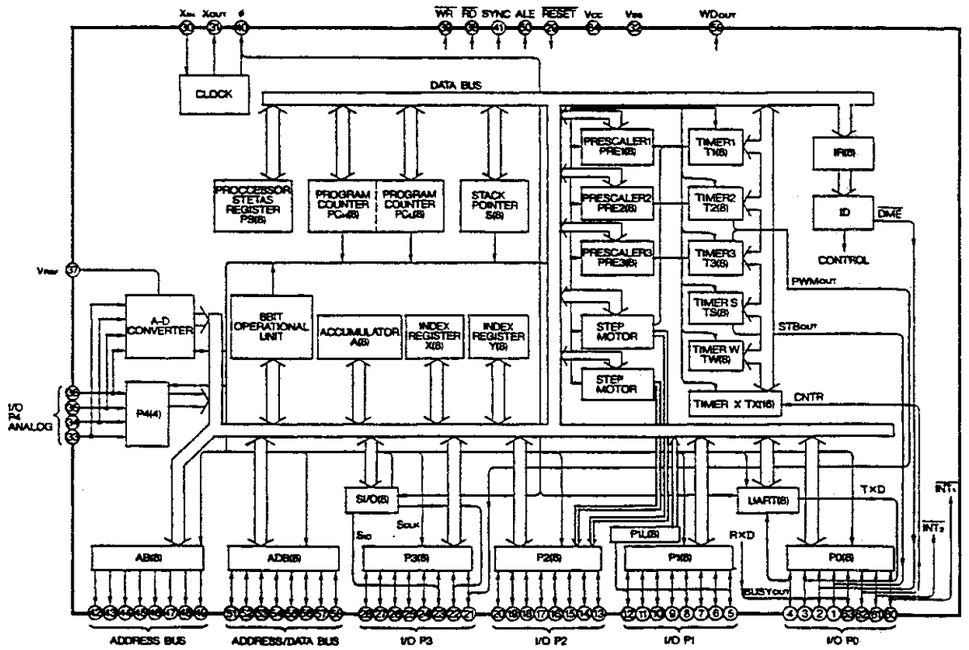

IC303 HN27C256AG-12

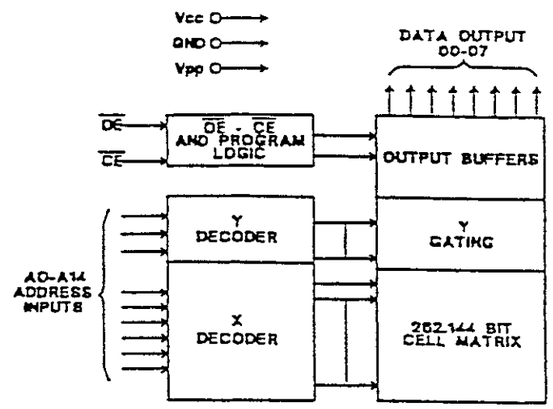

OPERATING MODES

MODE	PINS				
	$\overline{CE}$	OE	A9	V_{PP}	OUTPUT
READ	L	L	X	V_{CC}	D_{OUT}
OUTPUT DISABLE	L	H	X	V_{CC}	HIGH Z
STANDBY	H	X	X	V_{CC}	HIGH Z
PROGRAM	L	H	X	V_{PP}	D_{IN}
PROGRAM VERIFY	H	L	X	V_{PP}	D_{OUT}
PROGRAM INHIBIT	H	H	X	V_{PP}	HIGH Z
ELECTRONIC SIGNATURE	L	L	V_H	V_{CC}	CODE

NOTE : X = Don't care ; V_H = 12V ± 0.5V; H = High ; L = Low

IC30

A5–
A6–
A7–
A8–
A9–
A10–
A11–
A12–

I/O1
:
I/O8

CE2
CE1
WE
OE

R PCB-MAIN——

03 MB40576PF

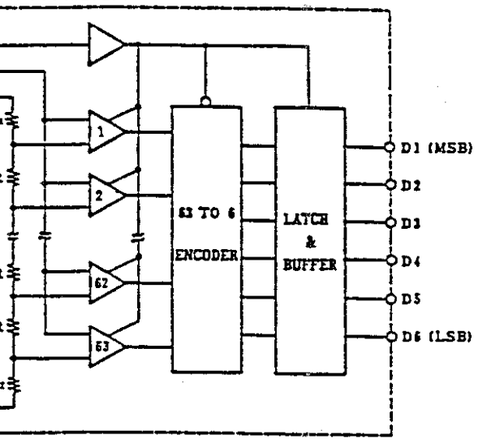

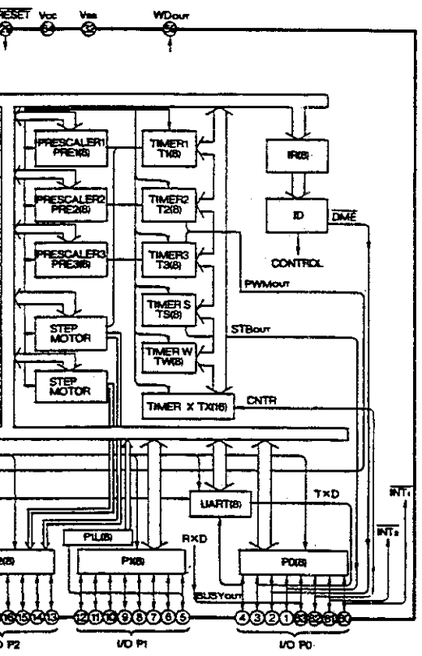

IC206 M5M5256BFP-85/μPD43256AGU-85LL

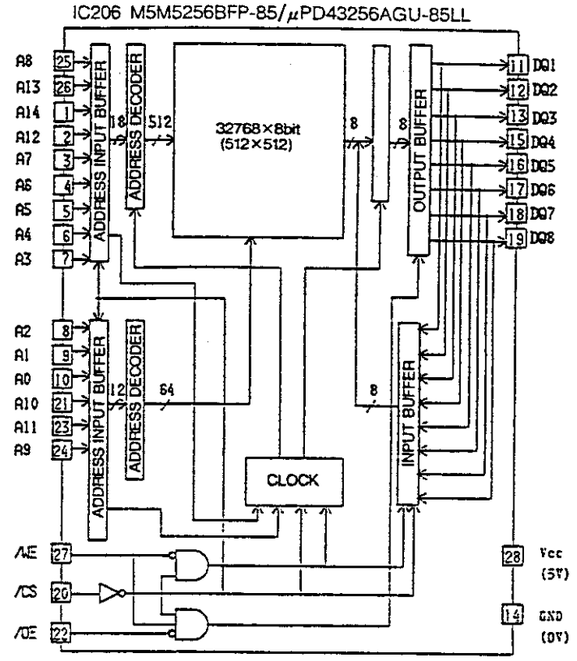

A_0–A_{14} : ADDRESS
I/O_1–I/O_8 : DATA I/O
$\overline{CS}$: CHIP SELECTIVE INPUT
$\overline{WE}$: WRITE ENABLE
$\overline{OE}$: OUTPUT ENABLE
V_{CC} : +5V
GND : GROUND

OPERATING MODE

$\overline{CS}$	$\overline{OE}$	$\overline{WE}$	MODE	OUT	I
H	×	×	NON-SELECTING	HIGH Z	I_{SB}
L	H	H	OUTPUT DISABLE	HIGH Z	I_{SB}
L	L	H	READ	D_{OUT}	I_{CCA}
L	×	L	WRITE	D_{IN}	I_{CCA}

IC303 HN27C256AG-12

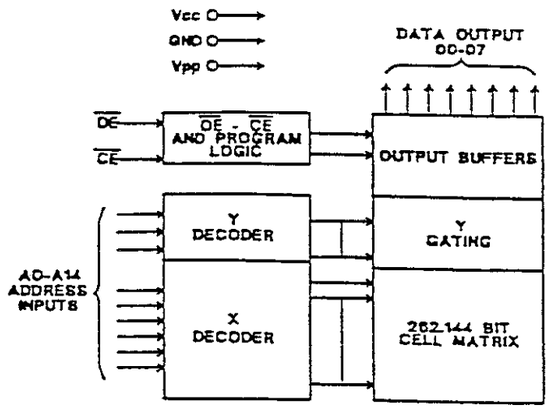

OPERATING MODES

MODE	PINS				
	$\overline{CE}$	$\overline{OE}$	A9	V_{PP}	OUTPUT
READ	L	L	X	V_{CC}	D_{OUT}
OUTPUT DISABLE	L	H	X	V_{CC}	HIGH Z
STANDBY	H	X	X	V_{CC}	HIGH Z
PROGRAM	L	H	X	V_{PP}	D_{IN}
PROGRAM VERIFY	H	L	X	V_{PP}	D_{OUT}
PROGRAM INHIBIT	H	H	X	V_{PP}	HIGH Z
ELECTRONIC SIGNATURE	L	L	V_H	V_{CC}	CODE

NOTE : X = Don't care ; V_H = 12V ± 0.5V; H = High ; L = Low

IC304 LC3564PM/LH5160N-10L/CXK5864BM

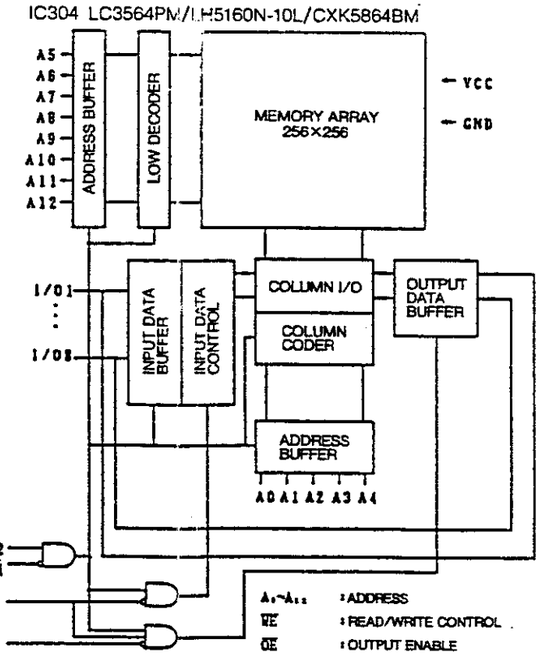

A_0~A_{12} : ADDRESS
$\overline{WE}$: READ/WRITE CONTROL
$\overline{OE}$: OUTPUT ENABLE
$\overline{CE1}$, CE2 : CHIP ENABLE
I/O_1-I/O_8 : DATA I/O
V_{CC}, GND : POWER

MODE	$\overline{CE1}$	CE2	$\overline{OE}$	$\overline{WE}$	I/O	I
READ	L	H	L	H	OUT	I_{CCA}
WRITE	L	H	X	L	IN	I_{CCA}
OUTPUT DISABLE	L	H	H	H	HIGH Z	I_{CCA}
NON-SELECTING	H	X	X	X	HIGH Z	I_{CCS}
	X	L	X	X	HIGH Z	I_{CCS}

5. Resistors

Value	Not indicated = Ω K = kΩ(1000Ω) M = MΩ(1000kΩ)	
Wattage	Parts except for chips	Not indicated = 1/4W or 1/6W
	Chips	Not indicated = 1/10W
Tolerance	Not indicated = ±5% D = ±0.5% J = ±5% F = ±1% K = ±10%	
Short	I Parts except for chips	Not indicated : Carbon resistor (S) : Fixed composition resistor (MB) : Metal oxide film resistor(type B) (CE) : Cemented resistor (W) : Wire wound resistor (M) : Metal film resistor (MPC) : Metal plate cement resistor (ML) : Metal liner resistor
	II Chip	Not indicated : Chip resistor

6. This is a basic schematic diagram. Some sets may be subject to modification according to engineering improvement.

SPECIFIC SYMBOL

Zener Diode	Crystal unit
Varicap	Air Gap
Posistor	Part(resistor) attached on the copper-foil side of PCB
Thermistor	Ceramic filter
Fusible Resistor	

SERVICING PRECAUTION

SYMBOLS INDICATE COMPONENTS HAVING SPECIAL CHARACTERISTICS IMPORTANT TO SAFETY AND PERFORMANCE. THERFORE REPLACEMENT OF ANY SAFETY PARTS SHOULD BE IDENTICAL IN VALUE AND CHARACTERISTICS. FOR ACCURACY OF THE REPLACEMENT REFER TO THE PARTS LIST OF SERVICE MANUAL.
DON'T DEGRADE THE SAFETY OF THE RECEIVERS THROUGH IMPROPER SERVICING.

SCHEMATIC DIAGRAM
MODEL:P67E

• **NOTE**

1. DC voltages were measured from points indicated to the circuit ground with a high-Z voltmeter.
2. Waveforms were taken with standard colour bar signal.
3. TP6A, etc. show Test Points.

4. CAPACITORS

Value	Not indicated	PF, for numbers more than 1 μF, for numbers less than 1
Dielectric Strength	Not indicated :50V	
Tolerance	Not indicated ±10%	No Tolerance is indicated for electrolytic capacitors and ±20%
	G=±2% P=+100% Q=+30% C=±0.25PF J=±5% −0% −10% D=±0.5PF K=±10% Z=+80% T=+200% F=±1PF M=±20% −20% −0% G=±2PF	
Sort	I Parts except for chips	Not indicated : Ceramic capacitor (MH) : Polyester capacitor (PP) : Polypropylene film capacitor (ALM) : Aluminus electrolytic capacitor (TF) : Twin film capacitor (SC) : Semiconductor ceramic capacitor (MP) : Metalized paper (MPP) : Metalized plastic film capacitor (MMF) : Metalized polyester capacitor (MF.PP) : Polyester polypropylence film capacitor (PS) : Styrol capacitor (TAN)or(TANT) : Tantalum capacitor — : Electrolytic capacitor (BP)or(NP) : Non polarized electrolytic capacitor
	II Chips	Not indicated : Ceramic capacitor chip — : Electrolytic capacitor (BP)or(NP) : Non polarized electrolytic capacitor chip
Characteristic (only ceramic capacitor)	Not indicated : F or B(high dielectric percentage) CH,SL,etc. : Temperature compensating types	

⚠PCB-POWER

SH

FM

SM

STEP-
MOTOR

HD

THERMAL-
HEAD

NOISE-FIL
GL-2030FV

CONECTOR-UD
29P

GND
5V
12V
HON

PP

B-1PIN

PP

N
AC
L

PCB-POWER

GND

24V

PH

PH

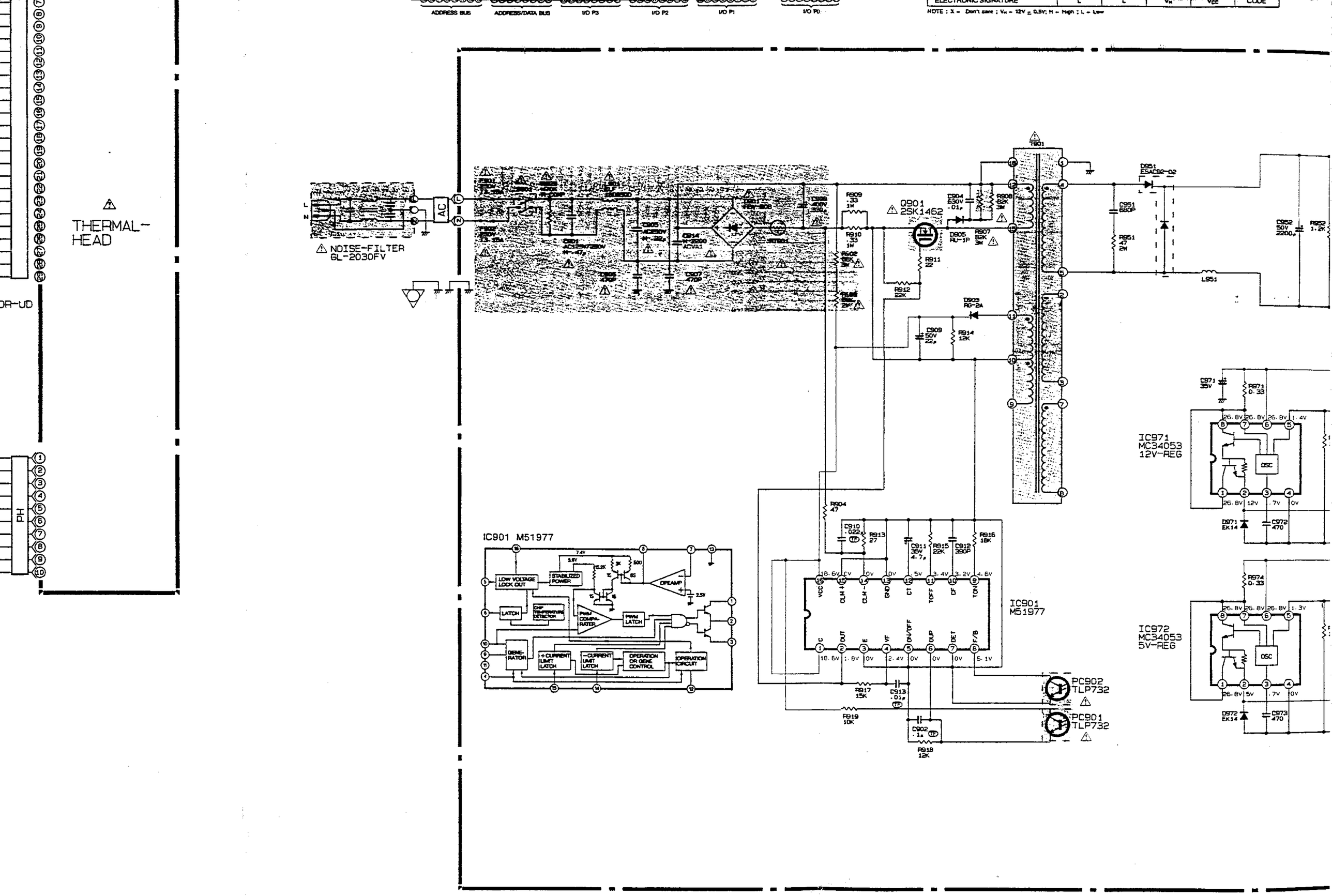

ADDRESS BUS
ADDRESS/DATA BUS
I/O P3
I/O P2
I/O P1
I/O P0
ELECTRONIC SIGNATURE
NOTE : X = Don't care ; VH = 12V ± 0.5V; H = High ; L = Low
THERMAL-HEAD
DR-UD
PH
NOISE-FILTER GL-2030FV
AC
Q901 2SK1462
T901
D951 ESAC92-02
L951
IC901 M51977
LOW VOLTAGE LOCK OUT
STABILIZED POWER
LATCH
CHIP TEMPERATURE DETECTOR
PWM COMPARATER
PWM LATCH
OPEAMP
GENERATOR
+CURRENT LIMIT LATCH
-CURRENT LIMIT LATCH
OPERATION OR GENE CONTROL
OPERATION CIRCUIT
PC902 TLP732
PC901 TLP732
IC971 MC34053 12V-REG
IC972 MC34053 5V-REG
OSC

ELECTRONIC SIGNATURE	L	L	V_H	V_{CC}	CODE	
	X	L	X	X	HIGH Z	I_{CC3}

NOTE : X = Don't care ; V_H = 12V ± 0.5V; H = High ; L = Low

I/O P2 I/O P1 I/O P0

V_{SS}:GND V_{CC}:POWER

PCB-POWER

Q901 2SK1462

D901 RBV-406

D904 630V .01μ

D905 RU-3P

D907 470P

D908 400V 330μ

D909 RG-2A

D910 .33 1W

D911 22

D912 22K

D914 X-2500 ACTAI

R904 47

R905 68K 1W

R906 82K 1W

R907 82K 1W

R908 68K 1W

R909 .33 1W

R910 .33 1W

R911 22

R912 22K

R913 27

R914 12K

R915 22K

R916 18K

C909 50V 22μ

C910 .022

C911 35V 4.7μ

C912 390P

C913 .01μ

C914 X-2500 ACTAI

C915 400V 330μ

C916 400V 330μ

C917 470P

C918 .1μ

C919 10K

C920 12K

C921 12K

C922 .1μ

C923 .1μ

C924 .1μ

C925 .1μ

C926 .1μ

C927 .1μ

C928 .1μ

C929 .1μ

C930 .1μ

C931 .1μ

C932 .1μ

C933 .1μ

C934 .1μ

C935 .1μ

C936 .1μ

C937 .1μ

C938 .1μ

C939 .1μ

C940 .1μ

C941 .1μ

C942 .1μ

C943 .1μ

C944 .1μ

C945 .1μ

C946 .1μ

C947 .1μ

C948 .1μ

C949 .1μ

C950 .1μ

C951 680P

C952 50V 2200μ

C953 50V 10μ

C954 50V .01μ

C955 35V 1000P

C956 .1μ

C957 .1μ

C958 .1μ

C959 .1μ

C960 .1μ

C961 .1μ

C962 .1μ

C963 .1μ

C964 .1μ

C965 .1μ

C966 .1μ

C967 .1μ

C968 .1μ

C969 .1μ

C970 .1μ

C971 35V

C972 470

C973 470

C974 50V 10μ

C975 16V 2200μ

C976 10V 1000μ

D951 ESAC92-02

D952 .1μ

D953 .1μ

D954 .1μ

D955 .1μ

D956 .1μ

D957 1S2076A

D958 .1μ

D959 .1μ

D960 .1μ

D961 .1μ

D962 .1μ

D963 .1μ

D964 .1μ

D965 .1μ

D966 .1μ

D967 .1μ

D968 .1μ

D969 .1μ

D970 .1μ

D971 EK14

D972 EK14

D973 FD333EB2

D974 1S2076A

D975 RD5.6EB2

D976 1S2076A

D977 RD16EB1

D978 1S2076A

L951

L970 A62T5-001

L971 A62T5-001

L972 A62T5-001

L973

L974

R951 47 2W

R952 1.2K

R953 1.5K

R954 8.2K-F

R955 .05 5W

R956 470

R957 1.8K-F

R958 1K

R959 15K

R960 2.7K-F

R961 36K-F

R962 22K

R963 1.2K 2W

R964 2.7K-F

R965 10

R966 100

R967 .1μ

R968 .1μ

R969 .1μ

R970 .1μ

R971 0.33

R972 13K-F

R973 1.5K-F

R974 0.33

R975 100

R976 10K

R977 3.6K-F

R978 1.2K-F

VR951 B-20K 1/3W

VR952 B-20K 1/3W

VR953 B-2K 1/3W

VR954 B-2K 1/3W

VR955 B-2K 1/3W

VR956 B-2K 1/3W

VR957 B-2K 1/3W

VR958 B-2K 1/3W

VR959 B-2K 1/3W

VR960 B-2K 1/3W

VR961 B-2K 1/3W

VR962 B-2K 1/3W

VR963 B-2K 1/3W

VR964 B-2K 1/3W

VR965 B-2K 1/3W

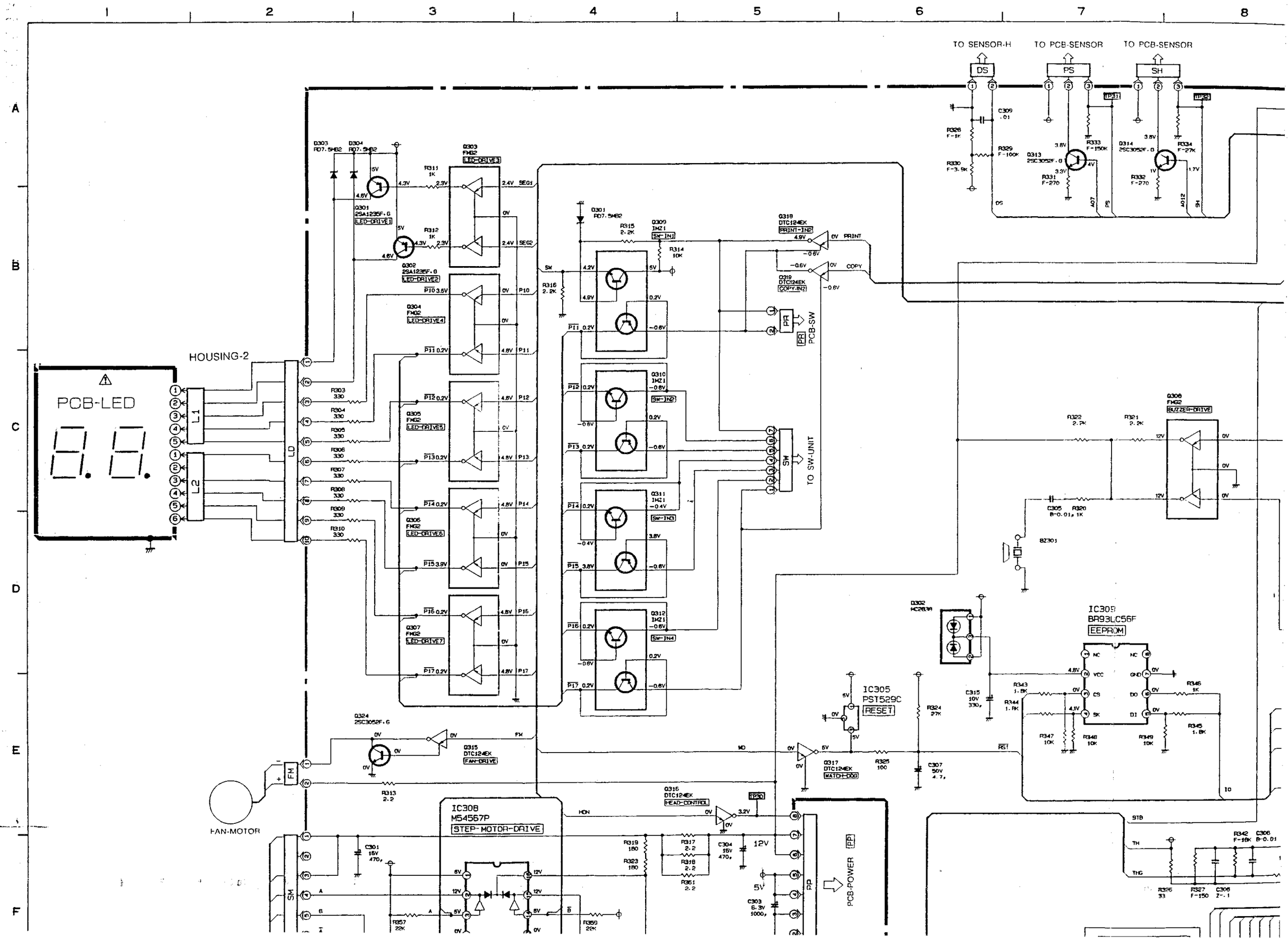
TO SENSOR-H
TO PCB-SENSOR
TO PCB-SENSOR
DS
PS
SH
HOUSING-2
PCB-LED
L1
L2
LD
FM
FAN-MOTOR
SM
IC308
M54567P
STEP-MOTOR-DRIVE
IC309
BR93LC56F
EEPROM
IC305
PST529C
RESET
TO SW-UNIT
PCB-SW
PCB-POWER
BUZZER-DRIVE
LED-DRIVE1
LED-DRIVE2
LED-DRIVE3
LED-DRIVE4
LED-DRIVE5
LED-DRIVE6
LED-DRIVE7
SW-IN1
SW-IN2
SW-IN3
SW-IN4
PRINT-IN2
COPY-IN2
FAN-DRIVE
MATCH-DOG
HEAD-CONTROL
EEPROM

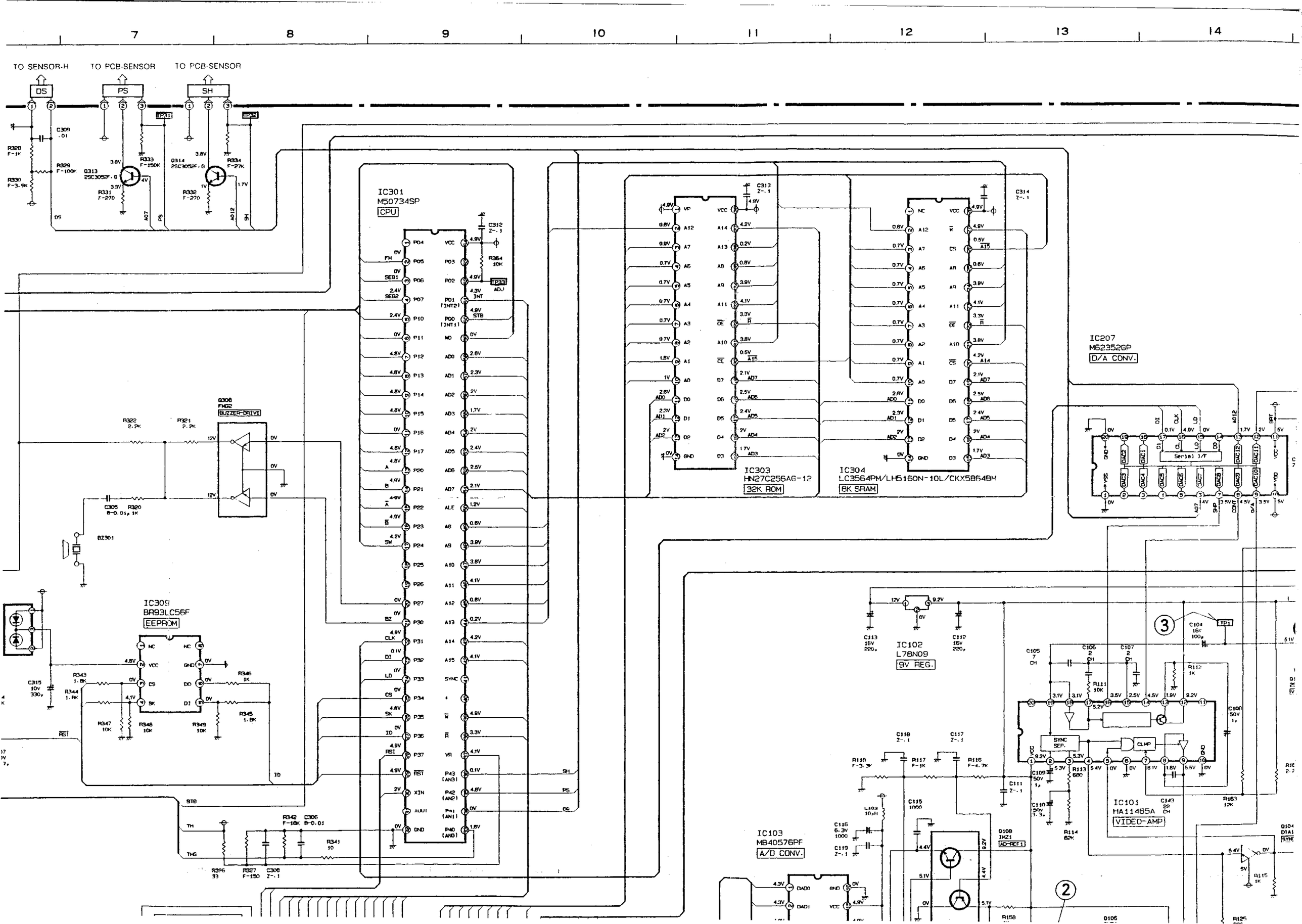

7
8
9
10
11
12
13
14
TO SENSOR-H
TO PCB-SENSOR
TO PCB-SENSOR
DS
PS
SH
IC301
M50734SP
CPU
IC303
HN27C256AG-12
32K ROM
IC304
LC3564PM/LH5160N-10L/CKX5864BM
8K SRAM
IC207
M62352GP
D/A CONV.
Serial I/F
Q308
FMG2
BUZZER-DRIVE
BZ301
IC309
BR93LC56F
EEPROM
IC102
L78N09
9V REG.
IC101
HA11465A
VIDEO-AMP
IC103
MB40576PF
A/D CONV.
Q108
IMZ1
AD-REF1

11 12 13 14 15 16 17

⚠PCB-MAIN

IC303
HN27C256AG-12
32K ROM

IC304
LC3564PM/LH5160N-10L/CKX5864BM
8K SRAM

IC207
M62352GP
D/A CONV.

IC102
L78N09
9V REG.

IC101
HA11455A
VIDEO-AMP

IC103
MB40576PF
A/D CONV.

J301 REMOTE
J101 VIDEO-IN
J102 VIDEO-OUT

S101
SW-DIP 10P
MODE-SW

PAPER TYPE	SUPER/HD
PAPER SAV	ON/OFF
SCAN	OVER/UNDER
MEMORY	Field/Frame
DIRECTION	REV./NOR.
AFC	ON/OFF
IMAGE	NEGA/POSI
4.43M TRAP	ON/OFF
3.58M TRAP	ON/OFF
IMPEDANCE	75Ω/H

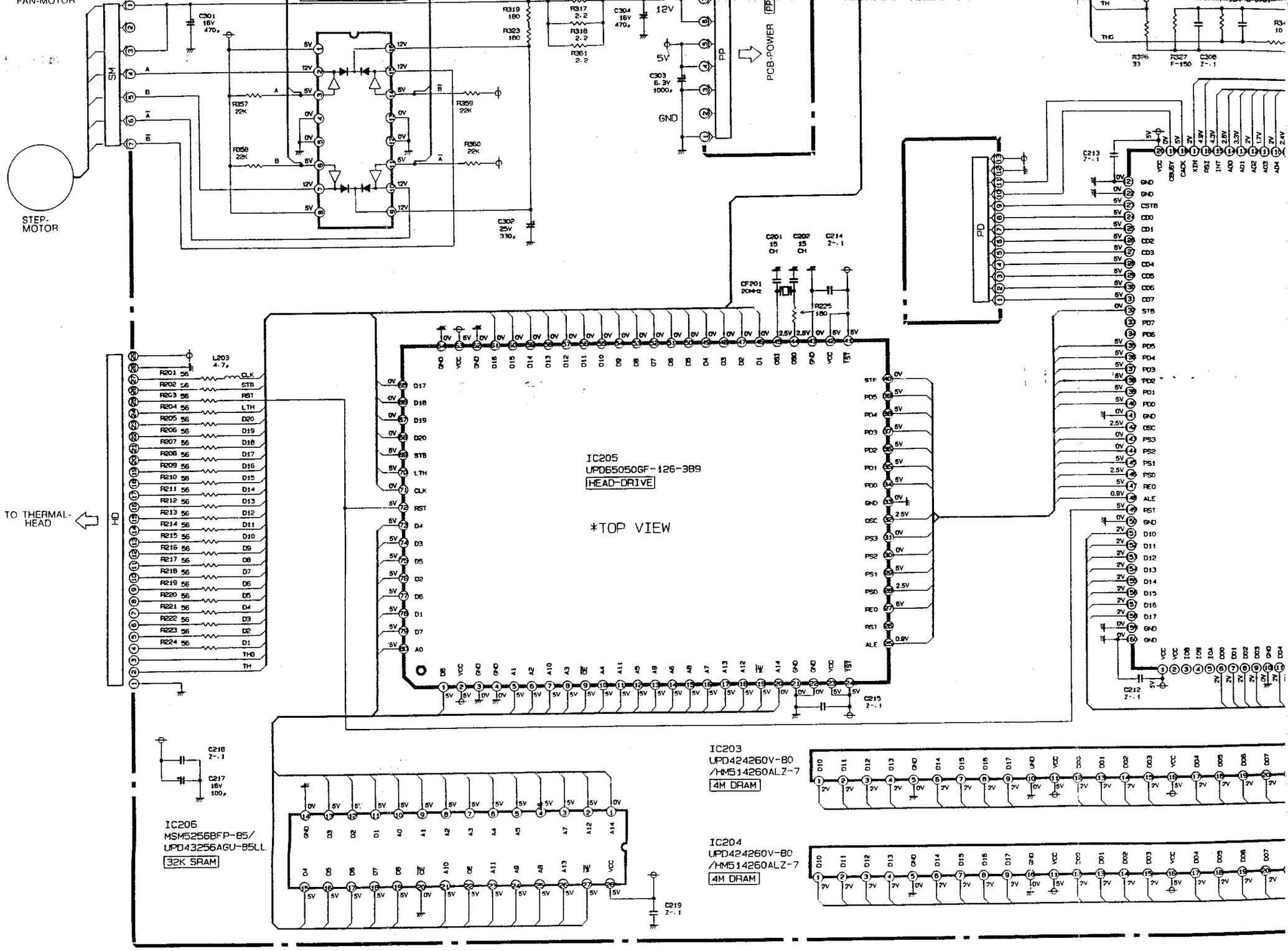
FAN-MOTOR
STEP-MOTOR
SM
PP
PCB-POWER
PD
HD
TO THERMAL-HEAD
IC205
UPD65050GF-126-389
HEAD-DRIVE
*TOP VIEW
IC206
MSM5256BFP-85/
UPD43256AGU-85LL
32K SRAM
IC203
UPD424260V-80
/HM514260ALZ-7
4M DRAM
IC204
UPD424260V-80
/HM514260ALZ-7
4M DRAM

IC202
UPD65647GD-020-5BD
MEMORY-CONTROL

*TOP VIEW

IC104
MB40776PF
/MB40776HPF
D/A CONV.

MB40576PF
A/D CONV.

IC107
MC74HC00AF
OSC

HDMI

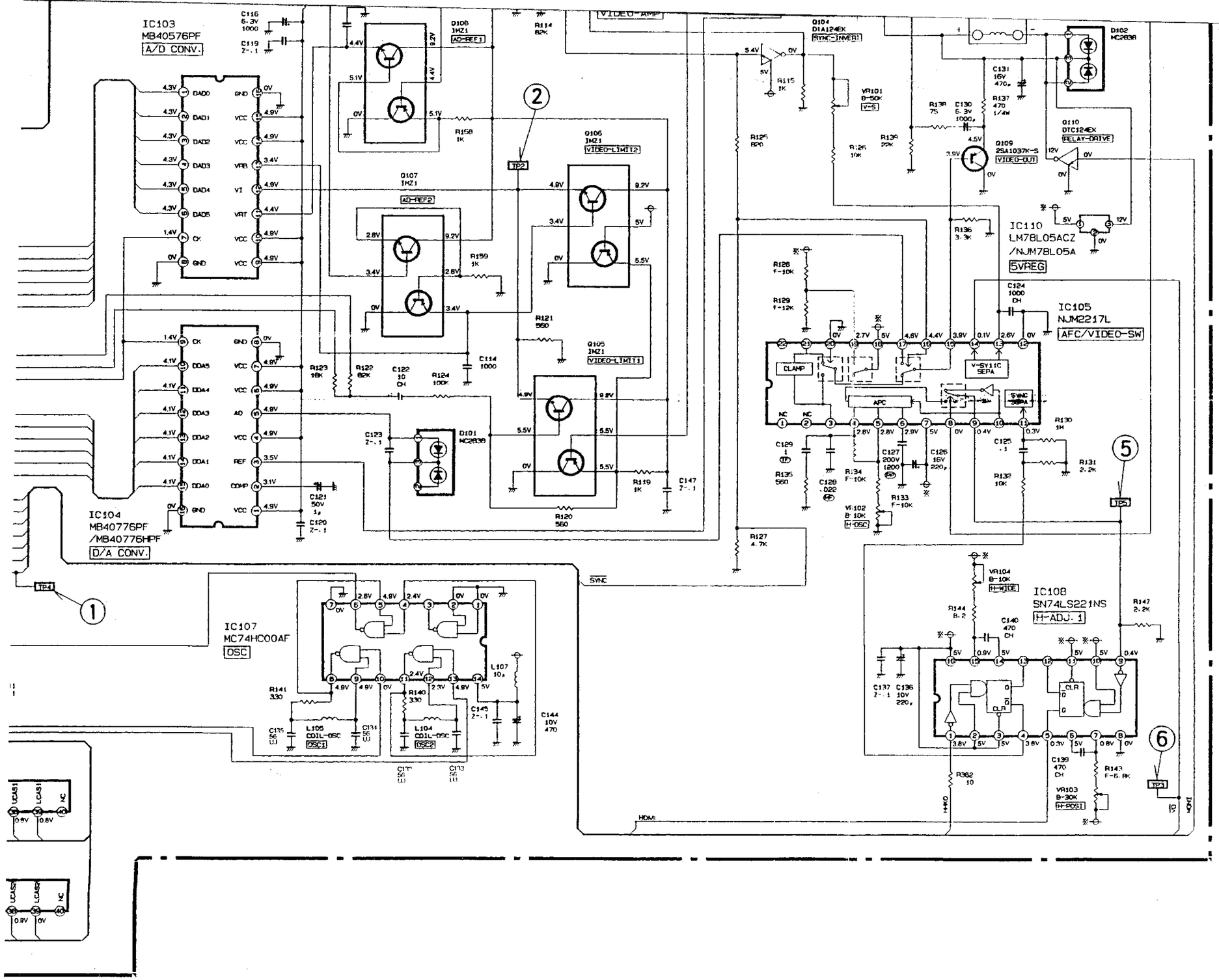

(1)4Vp-p(H)

(2)1.9Vp-p(H)

(3)1.2Vp-p(H)

(4)2Vp-p(H)

(5)4Vp-p(H)

(6)0.5Vp-p(H)

SAFETY PRECAUTIONS

CAUTION : Observe all cautions and safety related notes located inside the cabinet and on the chassis.

LEAKAGE CURRENT CHECK

Before returning the UNIT to the customer, it is recommended that leakage current be measured according to the following methods.

1. Cold Check

With the AC plug removed from the AC source, place a jumper across the two AC plug prongs. Turn the receiver AC switch on. Using an ohm-meter, connect one lead to the jumpered AC plug and touch the other lead to each exposed metal part (screwheads, metal overlays, etc.), particularly any exposed metal part having a return path to the chassis. Exposed metal parts having a return path to the chassis should have a minimum resistance reading of 1 megohm. Any resistance below this value indicates an abnormality which requires corrective action. Exposed metal parts not having a return path to the chassis will indicate an open circuit.

2. Hot Check

The test sequence, with reference to the measuring circuit in Fig. A, is as follows:

(1) With switch S1 open, connect the unit to the measuring circuit. Immediately after connection, measure leakage current, using both positions of switch S2, and with the switching devices in the unit in all of their operating positions.

(2) Close switch S1, energizing the receiver, immediately after closing the switch, measure leakage current, using both positions of switch S2, and with the switching devices in the receiver in all of their operating positions.
Repeat measurements of items (1) and (2) after the receiver has reached thermal stabilization.
The leakage current must not be more than 0.5 milliampere.

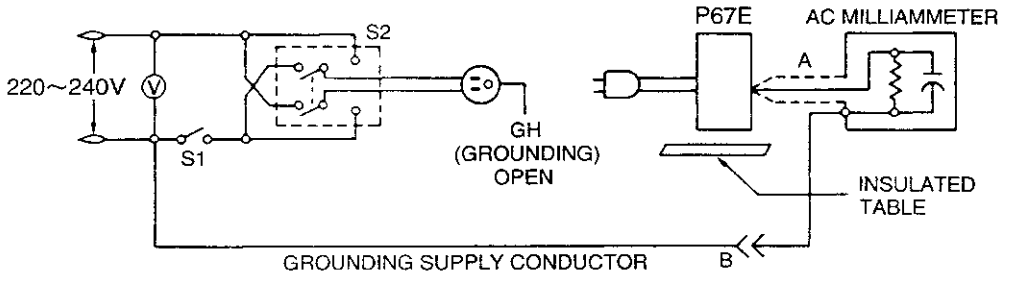

Fig. A

PRODUCT SAFETY NOTICE

Many electrical and mechanical parts in the video copy processor have special safety related characteristics. These characteristics are often not evident from visual inspection nor can the protection afforded by them necessarily be obtained by using replacement components rated for higher voltage, wattage, etc. Replacement parts which have these special safety characteristics are identified in this service manual. Electrical components having such features are identified by shading on the schematic diagram and the parts list of this service manual, and by marking on the supplementary sheet for this chassis to be issued subsequently.
Therefore replacements for any safety parts should be identical in value and characteristics.

LEAD DRESSING

The lead wires to be clamped are listed in the table below.

NOTE: The inner wires are clamped so that they do not come close to heat generating or high voltage components After servicing route all wires in their original position.

※Reverse printed character indicates aerial clamp.

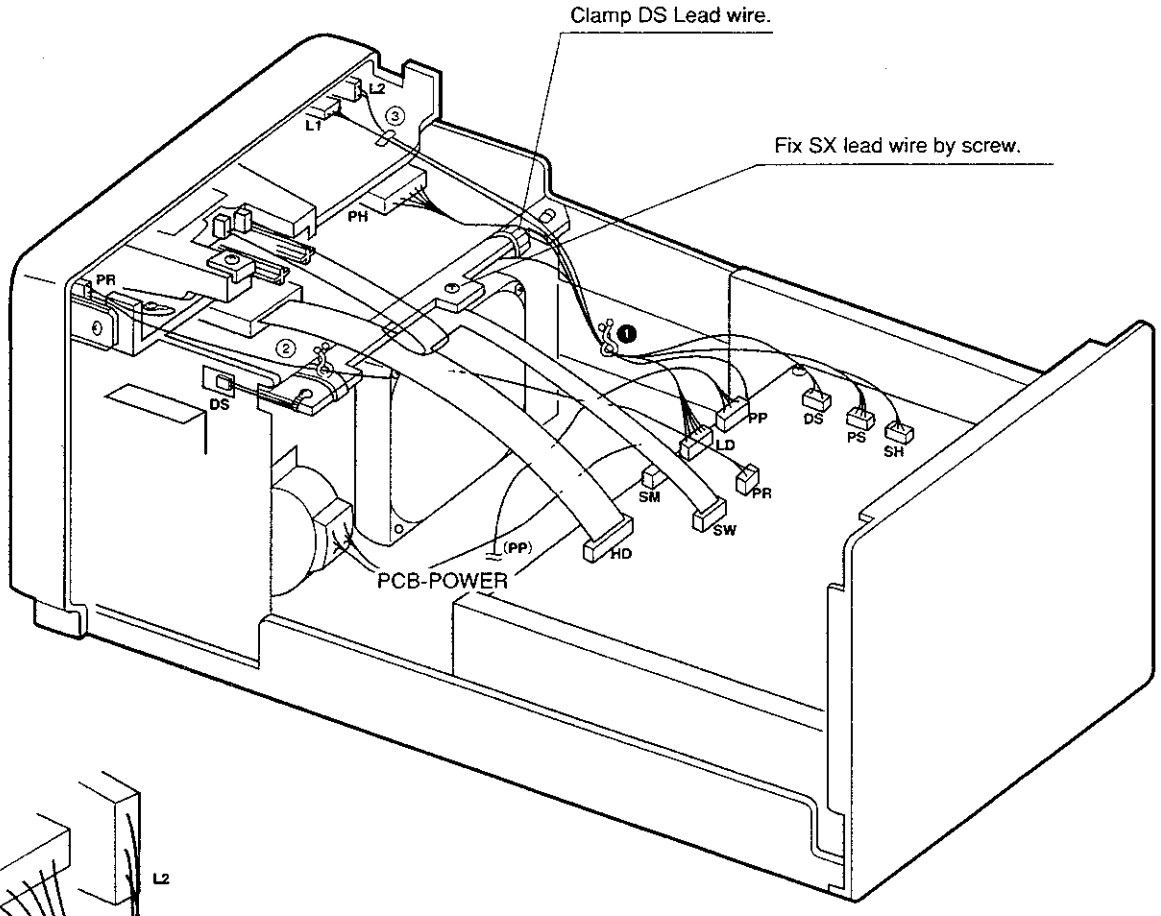

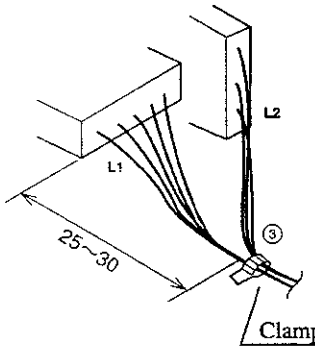

Clamp LD-L1,L2 lead wires.

Lead Wire	Clamp
L1-LD	❶-③
L2-LD	❶-③
PS	❶
SH	❶
DS	❶
PR	②

DISASSEMLBLY

Removal of CABINET

1. Remove the 4 screws securing the CABINET. (Fig.1-1)
2. Slide the cabinet slightly to the rear and remove it.

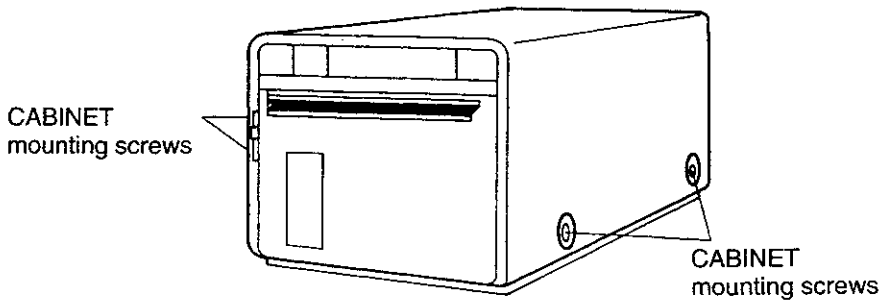

Fig.1-1

Removal of DOOR

1. Set the knob to "OPEN" and open the DOOR.
2. Remove the CAPS. (Fig 1-2)
3. Remove the 2 snaps using a driver. (Fig.1-2)
4. Raise the PAPER HOLDER slightly and remove the DOOR. (Fig.1-3)
5. For re-assembly, reverse the procedure.

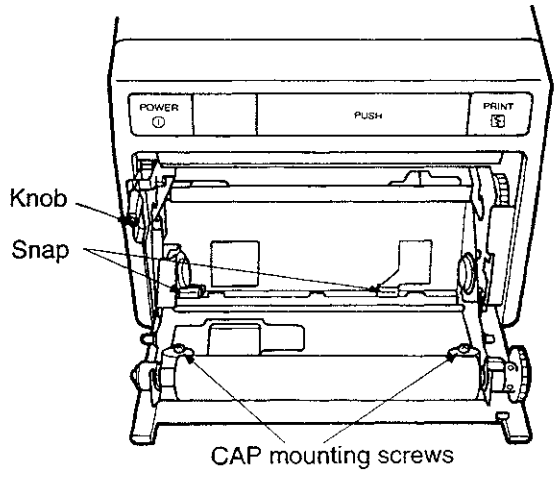

Fig.1-2

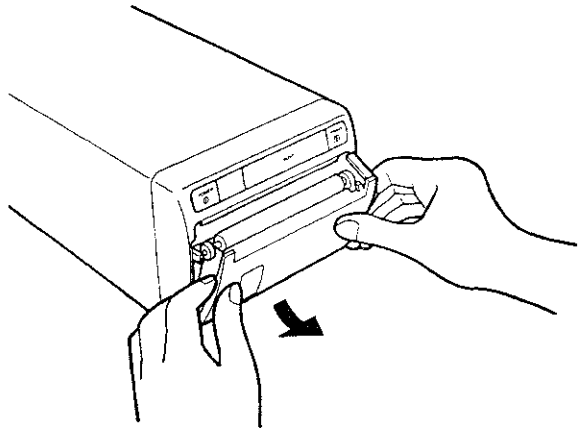

Fig.1-3

Removal of the FRONT PANEL

1. Remove the CABINET. (Fig.1-1)
2. Remove the DOOR. (Fig.1-2,1-3)
3. Disconnect the CONNECTORS LD, PR, SW connected to PCB-MAIN.
4. Remove the MEMBRANE SWITCH mounting screw connected to the fan bracket. (Fig.1-4)
5. Remove 4 screws securing the FRONT PANEL. (Fig.1-5)
6. Remove the KNOB. (Fig.1-5)
7. Remove the FRONT PANEL
8. For re-assembly, reverse the procedure.

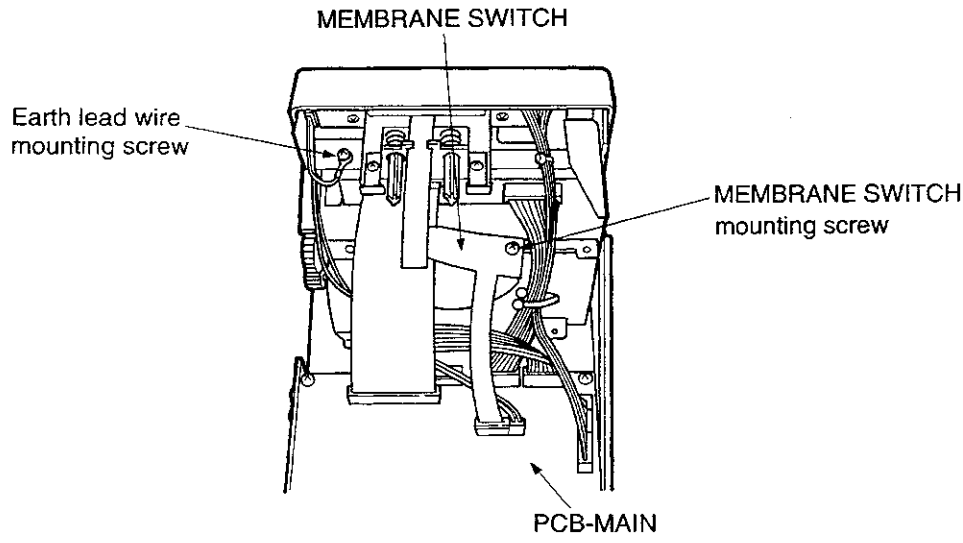

Fig. 1-4

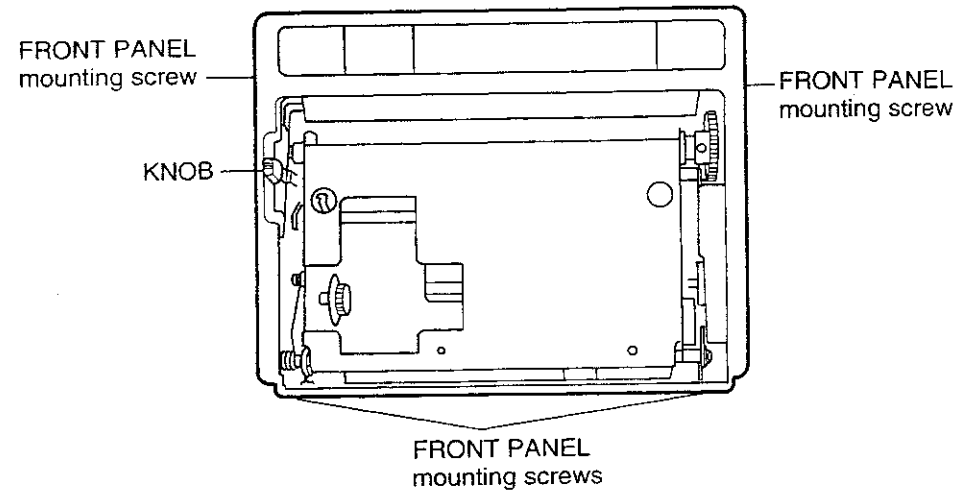

Fig. 1-5

Removal of PCB-MAIN	1. Remove the CABINET.(Fig.1-1) 2. Disconnect all the connectors to the PCB-MAIN. 3. Remove the 4 screws securing the PCB-MAIN. (Fig.1-6) 4. For re-assembly, reverse the procedure. 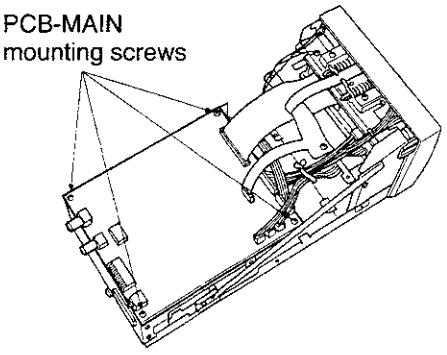 **Fig.1-6**
Removal of PCB-POWER	1. Remove the CABINET.(Fig.1-1) 2. Remove the 2 screws securing the POWER SWITCH BRACKET. (Fig.1-8) 3. Remove the POWER SWITCH BRACKET.(Fig.1-8) 4. Remove the REAR PANEL.(Fig.1-7) 5. Remove the PCB-POWER.(Fig.1-6) 6. Remove the TOP HOLDER.(Fig.1-9) 7. Remove the 1 screw securing the POWER UNIT, remove POWER UNIT.(Fig.1-9) 8. Remove the 5 screws securing the HEAT SINK of D951,Q952,IC971, IC901 on POWER UNIT , remove the HEAT SINK.(Fig.1-10) 9. Disconnect all the connectors coonnected to PCB-POWER. 10. Remove the 4 screws securing the PCB-POWER. (Fig.1-10) 11. Remove the PCB-POWER from POWER UNIT. 12. For re-assembly, reveres the procedure. 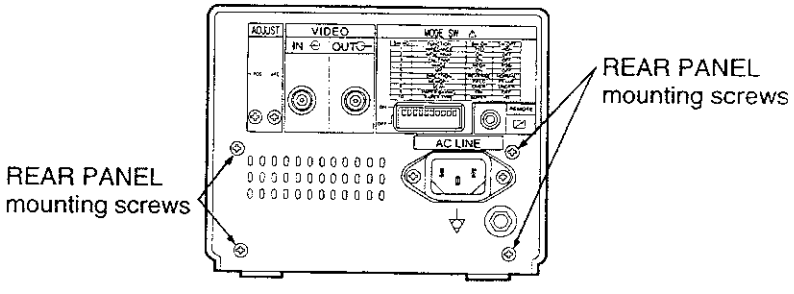 **Fig.1-7**

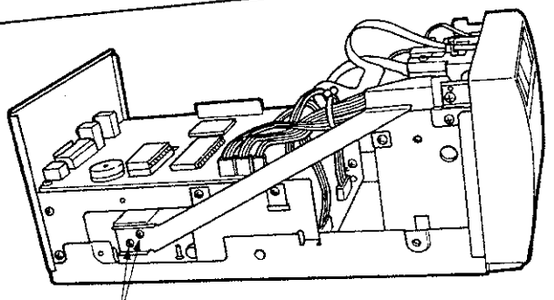

POWER SWITCH BRACKET
mounting screws

Fig.1-8

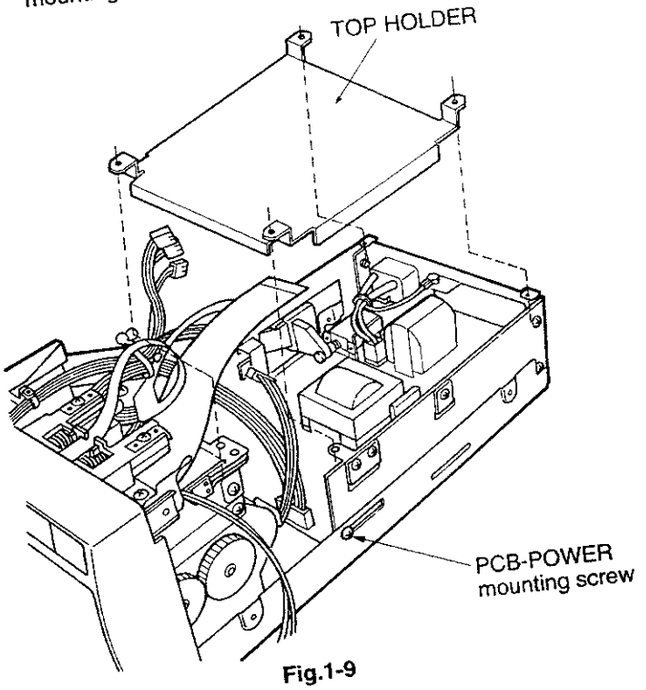

Fig.1-9

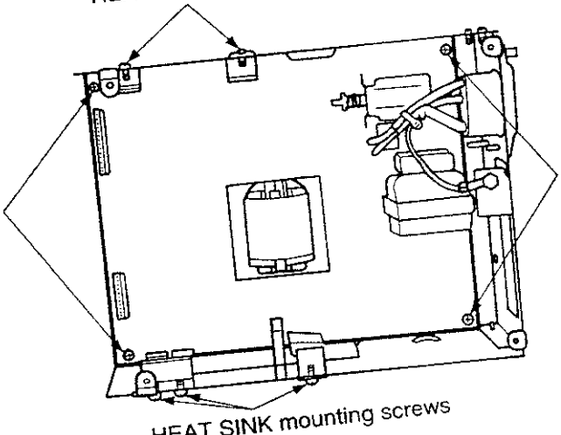

Fig.1-10

Removal of PRINTER UNIT	1. Remove the CABINET.(Fig.1-1) 2. Remove the DOOR. (Fig.1-2,1-3) 3. Remove the FRONT PANEL. (Fig.1-4,1-5) 4. Remove the 2 screws securing the POWER SWITCH BRACKET. (Fig.1-8) 5. Remove the POWER SWITCH BRACKET. (Fig.1-8) 6. Disconnect all the connectors coonnected to PRINTER UNIT. 7. Disconnect connectors PS , DS , SH , LD , SM , HD , SW connected to PCB-MAIN. 8. Remove the 2 screws securing the PRINTER UNIT. (Fig.1-11) 9. Remove the PRINTER UNIT. 10. For re-assembly, reveres the procedure. 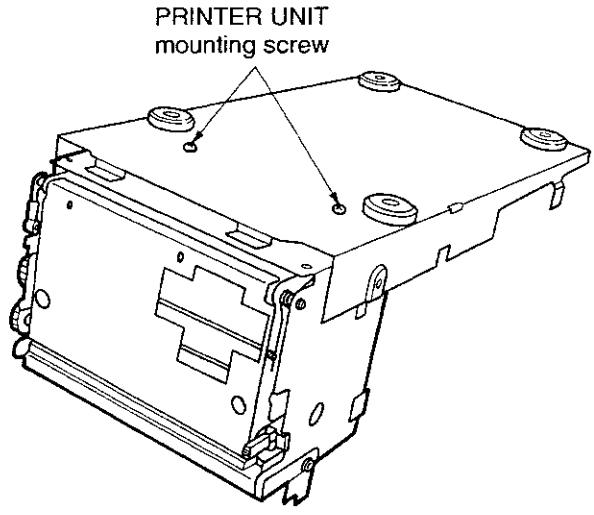 **Fig.1-11**

REPLACEMENT OF MECHANICAL PARTS

Replacemennt of STEP MOTOR

1. Remove the PRINTER UNIT. (Fig.1-11)
2. Remove the 2 screws securing the STEP MOTOR. (Fig.2-1)
3. For re-assembly, reveres the procedure.

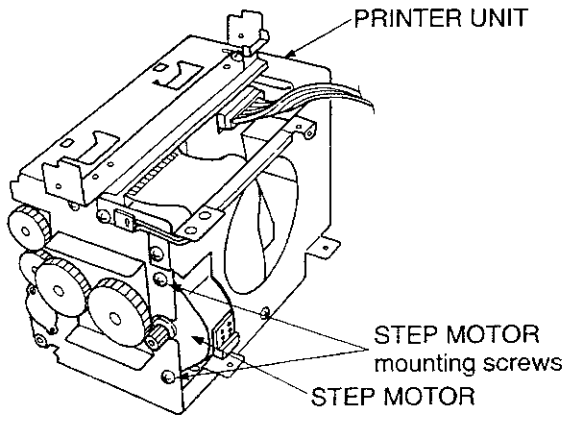

Fig.2-1

Replacement of PLATEN ROLLER	1. Remove the DOOR. (Fig.1-2,1-3) 2. Remove the E-RING on the left side of the PLATEN ROLLER. (Fig.2-2) 3. Remove BEARING. (Fig.2-2) 4. Side the PLATEN ROLLER to the right and remove it. 5. For re-assembly, reverse the procedure. Note : Be careful of the direction of bearings. 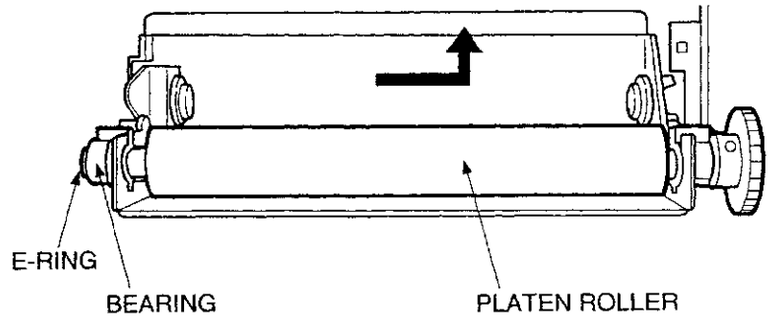 **Fig. 2-2**
Replacement of PAPER HOLDER	1. Remove the PRINTER UNIT. (Fig.1-11) 2. Remove the E-RINGS (both sides) of the PAPER SHAFT. (Fig.2-3) 3. Pull the PAPPER SHAFT out, to right side. Note : Be careful not to lose the door spring which comes off during the above process. (Fig.2-3) 4. Remove the PAPER HOLDER to your side. 5. For re-assembly, reverse the procedure. 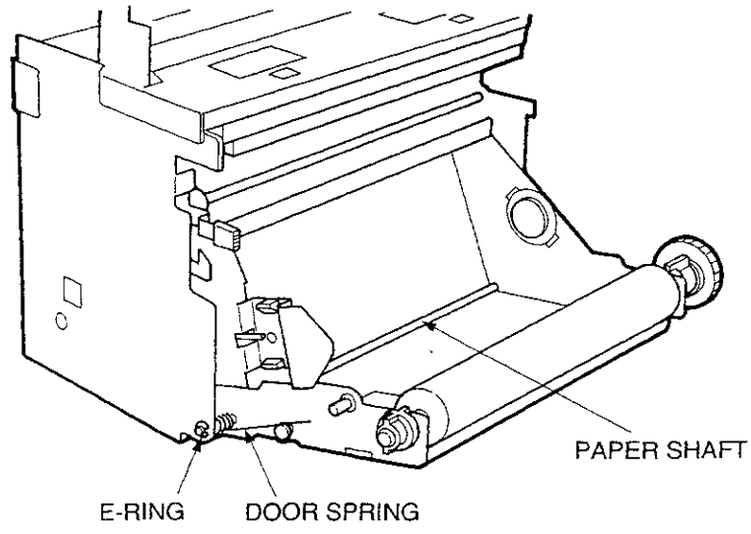 **Fig. 2-3**

Replacement of THERMAL HEAD

1. Remove the CABINT. (Fig.1-1)
2. Remove the FRONT PANEL.
3. Remove the screws securing POWER SWITCH BRACKET. (Fig.1-8)
4. Remove the B-P SWITCH HOLDER and remove the POWER SWITCH BRACKET. (Fig.1-8)
5. Remove the screws securing the UPPER PLATE.(Fig.2-4)
   Note : The HEAD SPRING is held by the UPPER PLATE. Be careful not to lose the HEAD SPRING.
6. Disconnect all the connectors connected to the THERMAL HEAD.
7. Remove the 3 screws securing the HEAT SINK. (Fig.2-4)

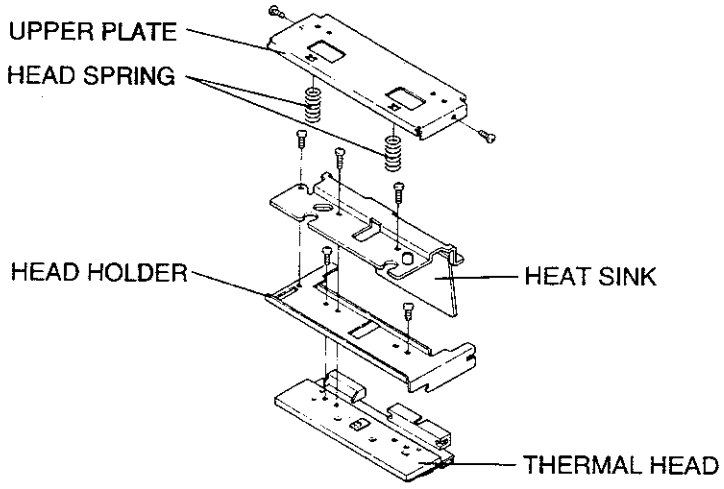

Fig. 2-4

8. Raise the front part of the HEAD HOLDER, slide it and remove it.
9. Remove screws securing the THERMAL HEAD.
   Note : Be careful not to touch the HEAT GENERATING PART. (Fig.2-5)
10. For re-assembling, reverse the procedure.
    Note : When fixing the THERMAL HEAD to the HEAD HOLDER with screws,use the GAUGE BAR and TIGHTEN screws after confirming that the holes are aligned. (Fig. 2-6)

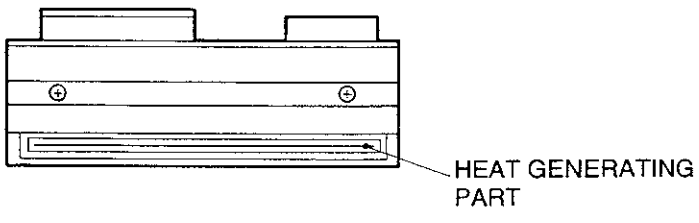

Fig.2-5

Replacement of THERMAL HEAD

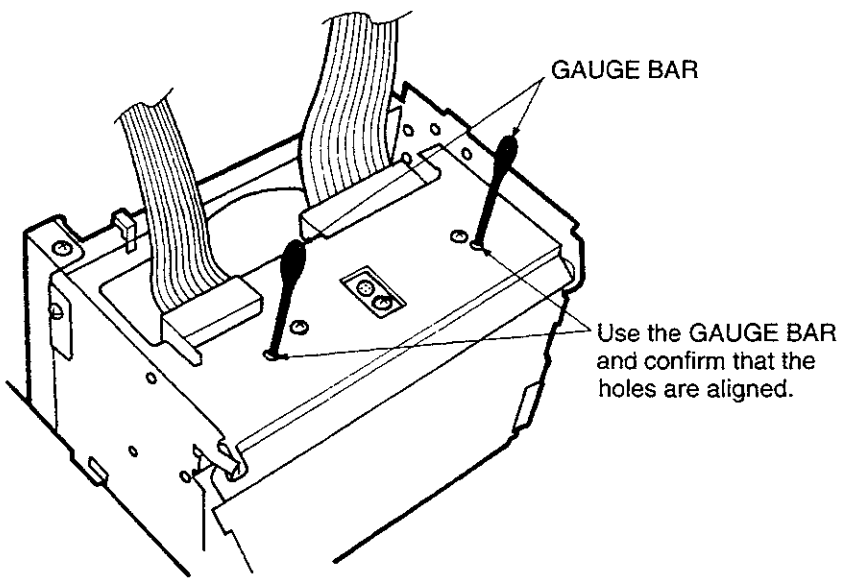

Fig.2-6

CLEANING METHOD

Cleaning of THERMAL HEAD

When the thermal head is dirty with dust or other dirt, rain-drop patterns or white vertical lines may appear in the printed picture.
In this case, use the cleaning sheet (parts No. 857P003O40) or a THERMAL HEAD CLEANER PEN TH-2000 (859C425050) (which can be purchased separately) in the following manner.

※ Do not use a russet CLEANING PAPER (parts No. 857P001O10).
It may damage the THERMAL HEAD.

●How to use the CLEANING PAPER

1 Turn on the power.

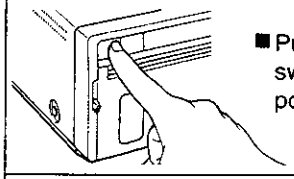

■ Push the **"POWER"** switch to turn on the power.

2 Open the door.

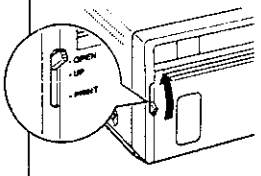

■ Switch the left side lever to the **"OPEN"** position.

3 Insert the cleaning paper.

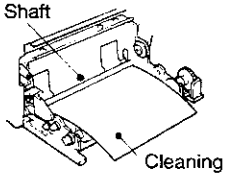

■ Insert the cleaning paper end under the shaft in the set.

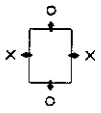

4 Close the door.

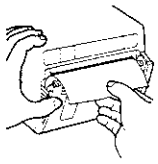

■ Close the door without taking out the cleaning paper.

5 Set the lever to the "PRINT" position.

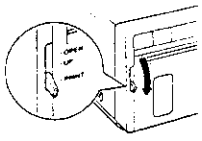

■ The lever located on the left side to **"PRINT"** position.

6 Press the "FEED" button.

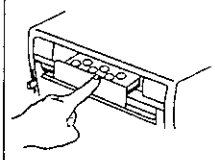

■ Press the button Until the cleaning paper come out about 2 inch.

7 Take out the cleaning paper.

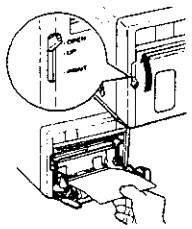

■ Open the door.

■ Remove the cleaning paper.

! Do not pull out the cleaning paper while the door is closed.

8 Repeat the steps **3** - **7** 1 or 2 times, and print 2-3 sheets to verify the cleaning effect.

9 Install the paper roll.

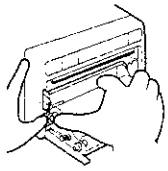

■ Install the paper. See **"4 installation of paper"**.

● How to use THERMAL HEAD CLEANER PEN

1. Draw out the pen from the body and pour a appropriate amount of cleaning solvent to the pen body.
   - When the pen core becomes dirty, replace it with the spare core.
     Note : Move the cleaner pen parallel to the heat generating part (brown part). (Fig.3-1)
   - Since the cleaning solvent is inflammable, close the cap after use and be particularly careful against fire.
   - Keep it in a cool, dark place with no direct exposure to the sun.

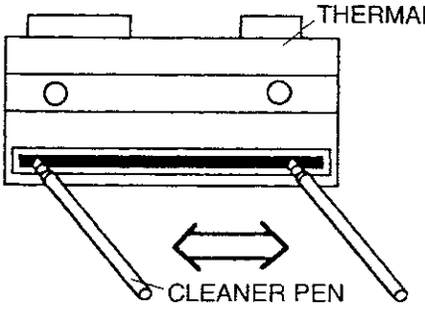

Fig 3-1

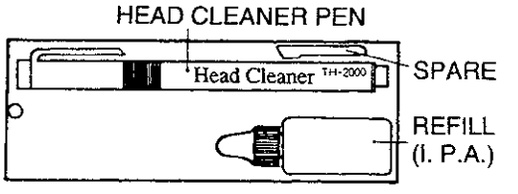

Fig 3-2 HEAD CLEANER PEN
(Separate purchase jig No. 859C425050)

Cleaning of PLATEN ROLLER

When the PLATEN ROLLER is very dirty print quality may be poor. In such cases, clean the platen roller by the following procedure.

1. Open the DOOR or the SET so that the PLATEN ROLLER can be cleaned.
2. Check the PLATEN ROOLER. if dirt or dust is adhered, clean the ROLLER using the blower brush shown in Fig.3-4.
3. When the PLATEN ROLLER is extremely dirty, use alcohol and clean it with a tooth brush while taking care not to damage the ROLLER.
4. When the cleaning is finished, check that normal printing is performed.

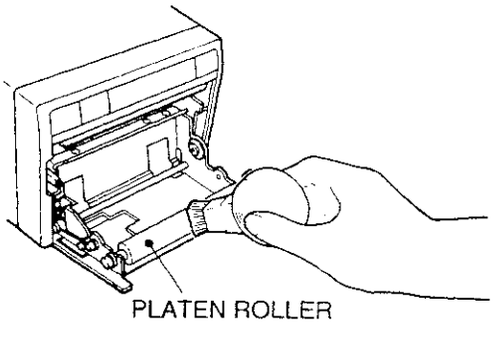

Fig.3-3

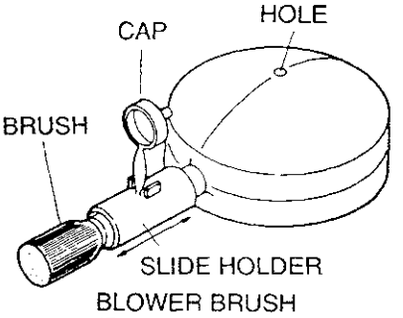

BLOWER BRUSH
(PARTS No. 859D048010)

Fig.3-4

Printed Circuit Boards Location

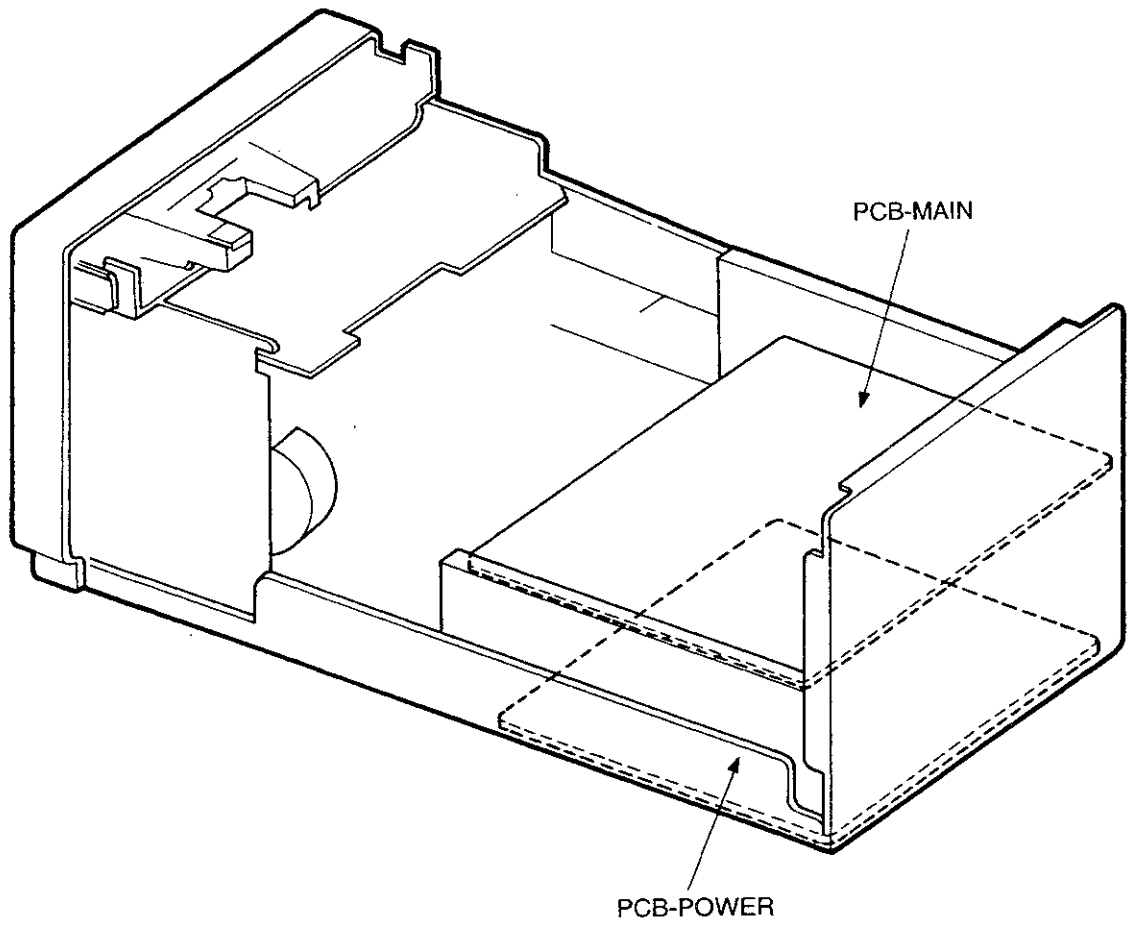

ADJUSTMENT POINTS

PCB-MAIN (COMPONENT SIDE)

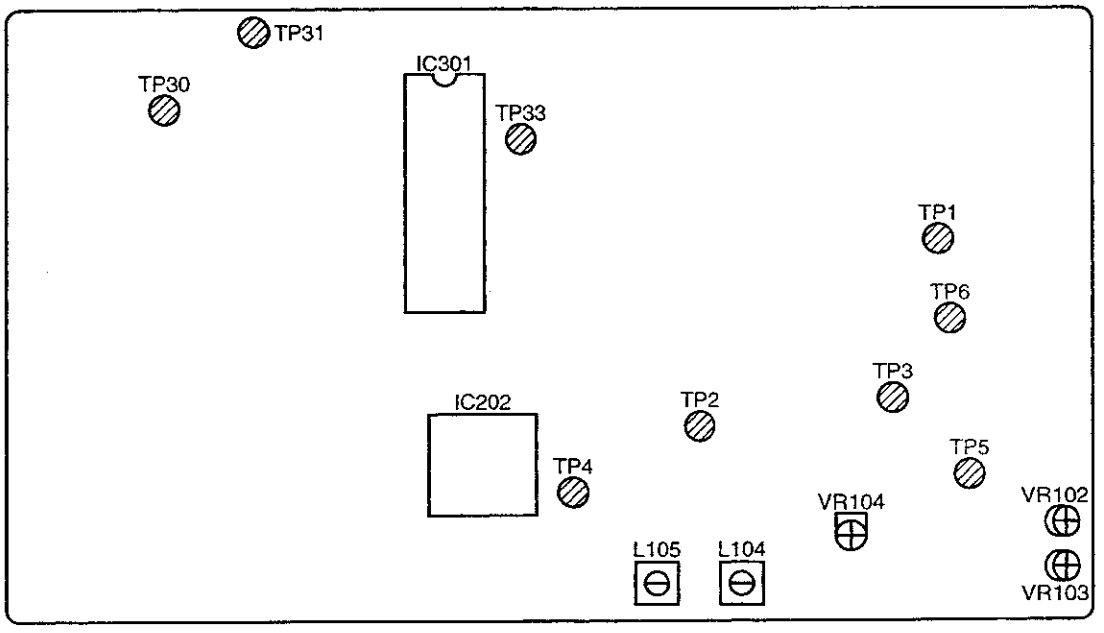

PCB-POWER (COMPONENT SIDE)

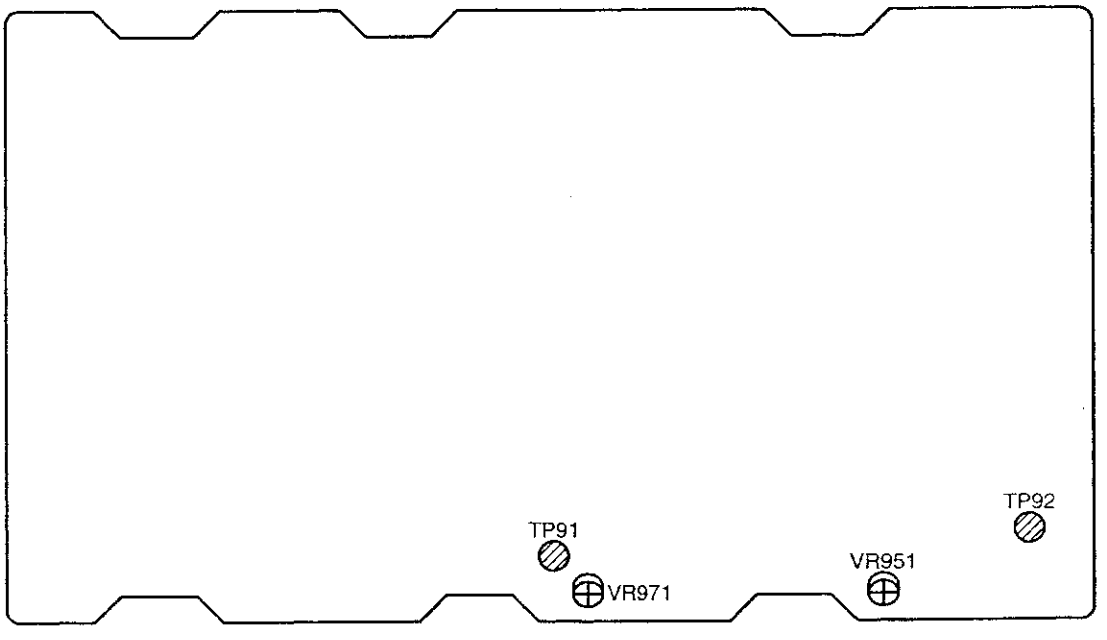

SERVICE MODE

Select the service mode with the buttons in the control box to perform the following adjustment and checks.

- Check the head position detecting level
  (Refer to Page19)
- Check the paper detecting level
  (Refer to Page19)
- Adjustment of item 9
  (SUB-BRIGHT and SUB-CONTRAST)

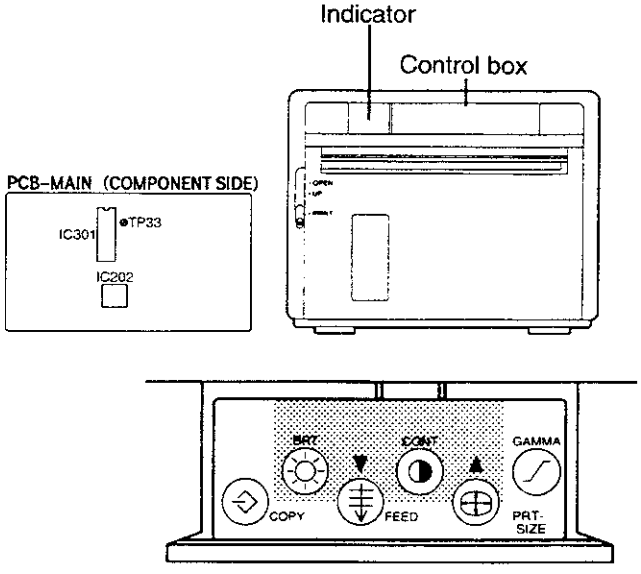

1. How to Select the Service Mode

①Turn the power off.

②Connect TP33 on the PCB-MAIN to GND.

③Turn the power on while pressing the COPY button.

When the indicator LED changes from "55" to "00", stop pressing the button.

(The service mode is selected.)

Note: After ③ is completed, the unit is set to the stand-by mode, with the indicator LED "00".

2. How to Select a Specific Set Up Mode

①Select the set up mode with the CONT button, observing the indicator LED.

Note: The set up mode varies in the order shown by the arrow in the figure.

3. How to Set the Adjustment Value

① After the set up mode is selected, set the adjustment value with the UP or DOWN button.

Note: The adjustment value appears on the right side of the indicator LED.

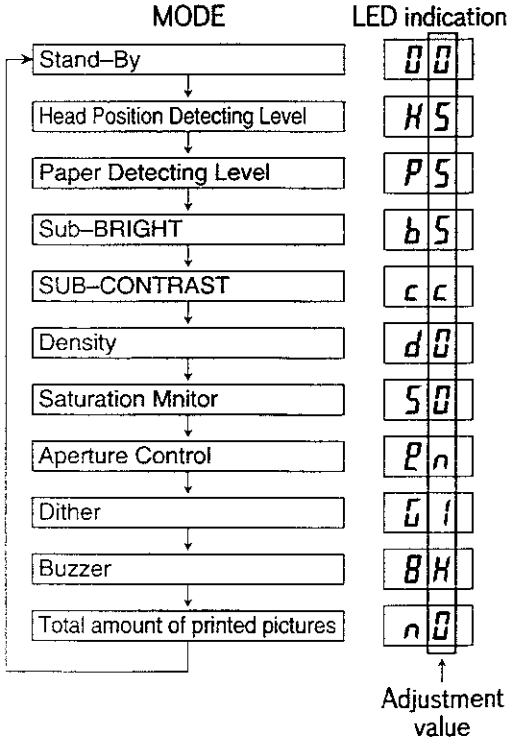

Remarks in Setting the Adjustment Value

- The values for the head position and paper detecting level in the set up mode are fixed.
- Altough variation of the values for SUB-BRIGHT and SUB-CONTRAST can be observed by the amplitude of the waveform on the oscilloscope, the indicator LEDs are fixed. (Refer to item 9 in the Adjustment Procedure.)

The table below describes each set up mode position.

MODE	LED indicata		Right indication of the LED	Note
	Left	Right		
Stand-By	0	0a,	Print size can be set by varying the adjustment value. It is not necessary to set this in the service mode.	The initial value is restored by pressing the CONT button if the adjustment value is varied in the service mode.
Head Position Detecting Level	H	5	The EED does not vary as much as in the normal mode. (Refer to p.19)	Fixed
Paper Detecting Level	P	5	The LED does not vary as much as in the normal mode. (Refer to p.19)	Ditto
SUB-BRIGHT	b	5	Index of brightness. The LED does not vary even if the adjustment value varies.	Setting can be performed by observing the waveform. (Refer to the Paragraph 8 under Circuit Adjustmens.)
SUB-CONTRAST	C	C	Index of contrast. The LED does not vary even if the adjustment value varies.	Ditto
Density	d	.9~9	Index of density,from .9(-9) to 9(9).	Initial setting at shipment is restored by initializing the E²PROM.
Saturation Monitor	S	0 1	Used to reverse the signal polarity (white-black) of the image area that expands over the limits during BRIGHT and CONTRAST adjustment. When 1 (in), the image is reversed and when 0 (out), not reversed.	Ditto
Aperture Control	P	Sn H	Index of aperture control. H indicates maximum apreture correction H (Hard), n (Normal), and S (Soft).	Ditto
Dither	G	0 1	Used to select the gradation. 1 (in) indicates 256 gradations and 0 (out) 64 gradations.	Ditto
Buzzer	B	OL H	Used to select the buzzer.	Ditto
Total amount of printed Pictures	n	0 1	Used to print (or not print) the total amaunt of the printed picture on the paper. When 1 (in), it is printed and when 0 (out) it is not printed.	Ditto Only when checking the number of the printed picture, the value of 1 (in) should be set.

4. How to Memorize the Adjustment Value and to Quit the Service Mode

①Either press the BRT button or press PRINT button, print.

(To memorize the adjustment value and to quit the service mode.)

Note: If power is switched off, the service mode is terminated, but adjustment data is not memorized.

ADJUSTMENT MODE

Select the adjustment mode with the buttons in the control box to perform the circuit adjustments in item 7 (clock frequency).
Note: Do not select any adjustment mode except for the above adjustments.

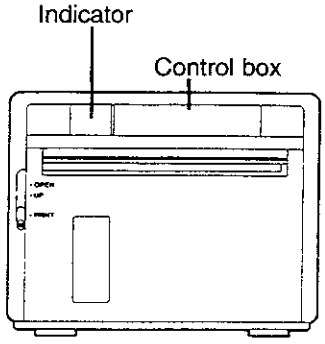

1. How to Select the Adjustment Mode

①Turn the power off.
②Connect TP33 on the PCB-MAIN to GND.
③Turn the power on while pressing the GAMMA button.
When the indicator LED is turned from " -- " to " 00 ", stop pressing the button.
(Adjustment mode is selected.)
Note: After ③ is completed, the unit is set to the stand-by mode, with the indicator LED " 00 ".

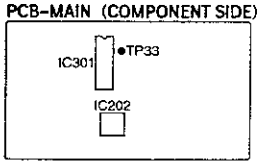

2. How to Select the Adjustment Item

●Adjustment in item 7 (clock frequency)
①Press the UP button.
②Check that the LED indicates" F7 " after approximately two seconds.

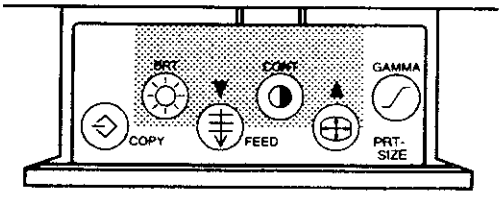

3. How to Quit the Adjustment Mode

①Turn the power off.
Note: If you make an error during the adjustment mode, turn the power off and select the adjustment mode again.

Check of Detection Level for Head Position and Paper

This procedure checks the performance of SH sensor and PS sensor.
Select the service mode to make the check. (Page 16)

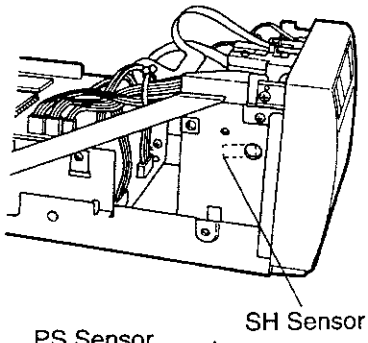

1. Check of Detection Level for Head Position (SH sensor)

①Select the service mode.
②Press the CONT button to set the indicator LED to "HS".
③Lower the front lever to PRINT position.
④Check that the indicator LED turns from "HS" to "H0" when press the COPY button.
⑤Check that the indicator LED turns into "Er" when the front lever is in the UP position.
Note: If the LED indicates "Er" with procedures ④ and ⑤, check the SH sensor or PCB-MAIN.
⑥ Terminate the service mode. (Page 17)

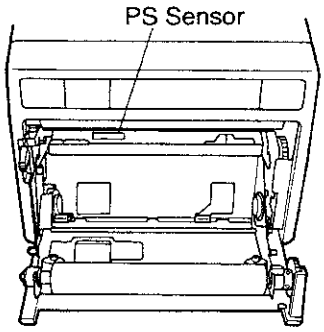

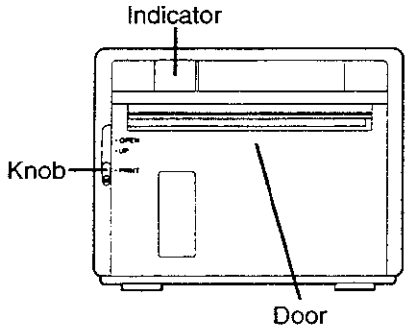

2. Check of Detection Level for Paper (PS sensor)

①Select the service mode.
②Open the door and take the paper out.
③Insert cleaning paper and close the door.
Note: The cleaning paper should be placed with the less sensitive side up. It should have no mechanical damage or dirt. The less sensitive side is specified by observing the voltage at TP31. The lowest voltage indicates less sensitive side.

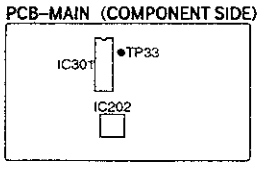

④Press the CONT button to change the indicator LED into "PS".
⑤Press the COPY button and check that the indicator LED changes from "PS".to "P0".
⑥Check that the LED dose not indicate "Er" then open the door and remove the paper.
Note: If the LED indicate "Er" with the procedures ⑤ and ⑥, check the PS sensor or PCB-MAIN.
⑦Terminate the service mode. (Page 17)

INITIALIZATION OF THE E²PROM

When the PCB-MAIN, EPROM (IC303) or E²PROM (IC309) is replaced. initialize the E²PROM with the following procedure.

①Turn the power off.
②Turn the power on while pressing the GAMMA and COPY buttons at the same time.
③Check that the indicator LED turns from "11" to "00".

Note: Keep pressing the buttons until the indicator LED turns from "11" to "00".

After E²PROM is initialized, the following adjustment values in the setting mode are restored to the initial values at shipment.
Thercfore they need not be set.

- Density (LED indicate: "d0")
- Saturation Monitor (LED indicate: "50")
- Aperture Control (LED indicate: "Pn")
- Dither (Gradation) (LED indicate: "G1")
- Buzzer (LED indicate: "BK")
- Total amount of the printed pictures (LED indicate: "n0")

INTIAL SETTING

Before making adjustments , preset the mode switch.

1) Mode switch and other

Mode switch presets

Setting point			Setting
S101 mode swith	#10	PAPER TYPE	HD
	#9	PAPER SAV.	OFF
	#8	SCAN	UNDER
	#7	MEMORY	FRAME
	#6	DIRECTION	NORMAL
	#5	AFC	OFF
	#4	IMAGE	POSI.
	#3	PAL TRAP	OFF
	#2	NTSC TRAP	OFF
	#1	IMPEDANCE	75Ω

Other preset

Setting point		Setting
Power	OFF/ON	ON
FRONT PANEL	Paper	K65HM
Lever	OPEN/HEAD UP/ PRINT	HEAD UP
Remote	Input Terminal	Remote
VIDEO IN	Input Terminal	Grey scale
VIDEO OUT	Output Terminal	Monitor
AC IN	Power Input	220~240V 50HZ

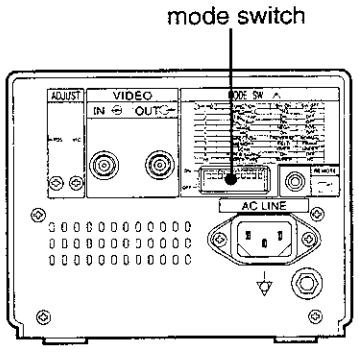

2) Input signal

Video Signal Grey scale (1.0Vp-p)

100%=0.714±0.01Vp−p (at 75Ω load end)

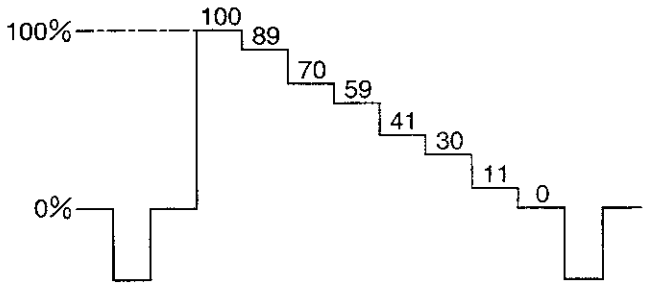

3) Oscilloscope

Unless otherwise specified, use 10:1 probes

1.Rough adjustment of power Voltage	**Adjustment purpose** To set the power voltage. **Symptom when incorrectly adjusted** No LED indication or the picture is not printed.

Measuring instrument	Digital voltmeter
Test point	TP91
EXT trigger	---
Measurement range	---
Input signal	---
Input Terminal	---

1.Connect the positive (+) of the voltmeter to TP91 and the negative (–) to TP71. Then turn VR971 Counter - clockwise so that it is at 90°
2. Turn the power on.
3. Adjust VR971 for 25V±0.5V.

PCB-POWER (COMPONENT SIDE)

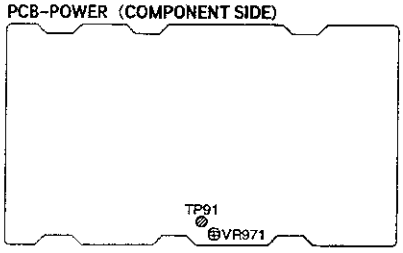

2.Main Voltage/Head voltage	**Adjustment purpose** To correct uneven density of the printed picture caused by unevenness of head resistance. **Symptom when incorrectly adjusted** Too dense or too thin printed pictures, particularly in black areas resulting in dull or burnt black picture.

Measuring instrument	Digital voltmeter
Test point	TP91, TP92
EXT trigger	---
Measurement range	---
Input signal	---
Input Terminal	---

1. Calculate E1 and E2 using the equation given below, and the resistance R indicated on the THERMAL HEAD.
E2[V] : Refer to Conversion Table.(Refer to page 23,24)
E1=E2+2.5 [V]
2.Connect TP30 to the chassis sheet metal by a short-circuit lead.
3. Connect the positive (+) of voltmeter to TP91 and the negative (—) to the chassis sheet metal. Adjust VR971 so that the reading is E1±0.05V.
4. Connect the positive (+) of the voltmeter to TP92 and the negative (—) to the chassis sheet metal.
5. Adjust VR951 so that the reading is E2±0.05V.
6. Remove the voltmeter and the short-circuit lead.

PCB-POWER (COMPONENT SIDE)

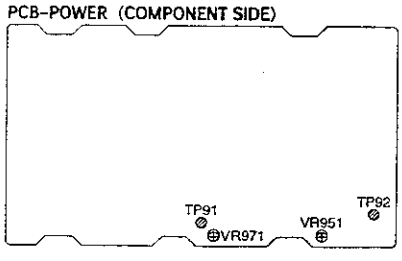

PCB-MAIN (COMPONENT SIDE)

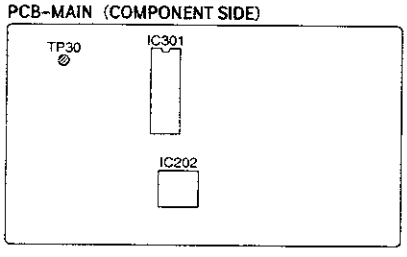

THERMAL HEAD

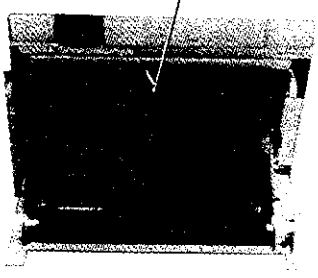

CONVERSION TABLE
(Resistance indicated on the head → Voltage at the head(E2))

Resistance 3 significant figures	Resistanse 4th figure Ω									
	0	1	2	3	4	5	6	7	8	9
4710	21.151	21.154	21.156	21.158	21.160	21.163	21.165	21.167	21.169	21.171
4720	21.174	21.176	21.178	21.180	21.183	21.185	21.187	21.189	21.191	21.194
4730	21.196	21.198	21.200	21.202	21.205	21.207	21.209	21.211	21.214	21.216
4740	21.218	21.220	21.222	21.225	21.227	21.229	21.231	21.233	21.236	21.238
4750	21.240	21.242	21.244	21.247	21.249	21.251	21.253	21.256	21.258	21.260
4760	21.262	21.264	21.267	21.269	21.271	21.273	21.275	21.278	21.280	21.282
4770	21.284	21.286	21.289	21.291	21.293	21.295	21.297	21.300	21.302	21.304
4780	21.306	21.308	21.311	21.313	21.315	21.317	21.319	21.322	21.324	21.326
4790	21.328	21.330	21.333	21.335	21.337	21.339	21.341	21.344	21.346	21.348
4800	21.350	21.352	21.355	21.357	21.359	21.361	21.363	21.366	21.368	21.370
4810	21.372	21.374	21.377	21.379	21.381	21.383	21.385	21.388	21.390	21.392
4820	21.394	21.396	21.399	21.401	21.403	21.405	21.407	21.410	21.412	21.414
4830	21.416	21.418	21.421	21.423	21.425	21.427	21.429	21.431	21.434	21.436
4840	21.438	21.440	21.442	21.445	21.447	21.449	21.451	21.453	21.456	21.458
4850	21.460	21.462	21.464	21.466	21.469	21.471	21.473	21.475	21.477	21.480
4860	21.482	21.484	21.486	21.488	21.491	21.493	21.495	21.497	21.499	21.501
4870	21.504	21.506	21.508	21.510	21.512	21.515	21.517	21.519	21.521	21.523
4880	21.525	21.528	21.530	21.532	21.534	21.536	21.539	21.541	21.543	21.545
4890	21.547	21.549	21.552	21.554	21.556	21.558	21.560	21.562	21.565	21.567
4900	21.569	21.571	21.573	21.576	21.578	21.580	21.582	21.584	21.586	21.589
4910	21.591	21.593	21.595	21.597	21.599	21.602	21.604	21.606	21.608	21.610
4920	21.612	21.615	21.617	21.619	21.621	21.623	21.626	21.628	21.630	21.632
4930	21.634	21.636	21.639	21.641	21.643	21.645	21.647	21.649	21.652	21.654
4940	21.656	21.658	21.660	21.662	21.665	21.667	21.669	21.671	21.673	21.675
4950	21.678	21.680	21.682	21.684	21.686	21.688	21.691	21.693	21.695	21.697
4960	21.699	21.701	21.704	21.706	21.708	21.710	21.712	21.714	21.716	21.719
4970	21.721	21.723	21.725	21.727	21.729	21.732	21.734	21.736	21.738	21.740
4980	21.742	21.745	21.747	21.749	21.751	21.753	21.755	21.758	21.760	21.762
4990	21.764	21.766	21.768	21.770	21.773	21.775	21.777	21.779	21.781	21.783
5000	21.786	21.788	21.790	21.792	21.794	21.796	21.798	21.801	21.803	21.805
5010	21.807	21.809	21.811	21.814	21.816	21.818	21.820	21.822	21.824	21.826
5020	21.829	21.831	21.833	21.835	21.837	21.839	21.842	21.844	21.846	21.848
5030	21.850	21.852	21.854	21.857	21.859	21.861	21.863	21.865	21.867	21.869
5040	21.872	21.874	21.876	21.878	21.880	21.882	21.884	21.887	21.889	21.891
5050	21.893	21.895	21.897	21.899	21.902	21.904	21.906	21.908	21.910	21.912
5060	21.914	21.917	21.919	21.921	21.923	21.925	21.927	21.929	21.932	21.934
5070	21.936	21.938	21.940	21.942	21.944	21.947	21.949	21.951	21.953	21.955
5080	21.957	21.959	21.962	21.964	21.966	21.968	21.970	21.972	21.974	21.976
5090	21.979	21.981	21.983	21.985	21.987	21.989	21.991	21.994	21.996	21.998
5100	22.000	22.002	22.004	22.006	22.009	22.011	22.013	22.015	22.017	22.019
5110	22.021	22.023	22.026	22.028	22.030	22.032	22.034	22.036	22.038	22.040
5120	22.043	22.045	22.047	22.049	22.051	22.053	22.055	22.058	22.060	22.062
5130	22.064	22.066	22.068	22.070	22.072	22.075	22.077	22.079	22.081	22.083
5140	22.085	22.087	22.089	22.092	22.094	22.096	22.098	22.100	22.102	22.104
5150	22.106	22.109	22.111	22.113	23.115	22.117	22.119	22.121	22.123	22.126
5160	22.128	22.130	22.132	22.134	22.136	22.138	22.140	22.142	22.145	22.147
5170	22.149	22.151	22.153	22.155	22.157	22.159	22.162	22.164	22.166	22.168
5180	22.170	22.172	22.174	22.176	22.178	22.181	22.183	22.185	22.187	22.189
5190	22.191	22.193	22.195	22.198	22.200	22.202	22.204	22.206	22.208	22.210
5200	22.212	22.214	22.217	22.219	22.221	22.223	22.225	22.227	22.229	22.231
5210	22.233	22.236	22.238	22.240	22.242	22.244	22.246	22.248	22.250	22.252
5220	22.255	22.257	22.259	22.261	22.263	22.265	22.267	22.269	22.271	22.274
5230	22.276	22.278	22.280	22.282	22.284	22.286	22.288	22.290	22.292	22.295
5240	22.297	22.299	22.301	22.303	22.305	22.307	22.309	22.311	22.314	22.316
5250	22.318	22.320	22.322	22.324	22.326	22.328	22.330	22.332	22.335	22.337
5260	22.339	22.341	22.343	22.345	22.347	22.349	22.351	22.353	22.356	22.358
5270	22.360	22.362	22.364	22.366	22.368	22.370	22.372	22.374	22.377	22.379
5280	22.381	22.383	22.385	22.387	22.389	22.391	22.393	22.395	22.398	22.400
5290	22.402	22.404	22.406	22.408	22.410	22.412	22.414	22.416	22.418	22.421

Resistance 3 significant figures	Resistanse 4th figure Ω									
	0	1	2	3	4	5	6	7	8	9
5300	22.423	22.425	22.427	22.429	22.431	22.433	22.435	22.437	22.439	22.441
5310	22.444	22.446	22.448	22.450	22.452	22.454	22.456	22.458	22.460	22.462
5320	22.464	22.467	22.469	22.471	22.473	22.475	22.477	22.479	22.481	22.483
5330	22.485	22.487	22.490	22.492	22.494	22.496	22.498	22.500	22.502	22.504
5340	22.506	22.508	22.510	22.512	22.515	22.517	22.519	22.521	22.523	22.525
5350	22.527	22.529	22.531	22.533	22.535	22.538	22.540	22.542	22.544	22.546
5360	22.548	22.550	22.552	22.554	22.556	22.558	22.560	22.562	22.565	22.567
5370	22.569	22.571	22.573	22.575	22.577	22.579	22.581	22.583	22.585	22.587
5380	22.590	22.592	22.594	22.596	22.598	22.600	22.602	22.604	22.606	22.608
5390	22.610	22.612	22.614	22.617	22.619	22.621	22.623	22.625	22.627	22.629
5400	22.631	22.633	22.635	22.637	22.639	22.641	22.643	22.646	22.648	22.650
5410	22.652	22.654	22.656	22.658	22.660	22.662	22.664	22.666	22.668	22.670
5420	22.672	22.675	22.677	22.679	22.681	22.683	22.685	22.687	22.689	22.691
5430	22.693	22.695	22.697	22.699	22.701	22.704	22.706	22.708	22.710	22.712
5440	22.714	22.716	22.718	22.720	22.722	22.724	22.726	22.728	22.730	22.732
5450	22.735	22.737	22.739	22.741	22.743	22.745	22.747	22.749	22.751	22.753
5460	22.755	22.757	22.759	22.761	22.763	22.765	22.768	22.770	22.772	22.774
5470	22.776	22.778	22.780	22.782	22.784	22.786	22.788	22.790	22.792	22.794
5480	22.796	22.798	22.800	22.803	22.805	22.807	22.809	22.811	22.813	22.815
5490	22.817	22.819	22.821	22.823	22.825	22.827	22.829	22.831	22.833	22.835
5500	22.838	22.840	22.842	22.844	22.846	22.848	22.850	22.852	22.854	22.856
5510	22.858	22.860	22.862	22.864	22.866	22.868	22.870	22.872	22.874	22.877
5520	22.879	22.881	22.883	22.885	22.887	22.889	22.891	22.893	22.895	22.897
5530	22.899	22.901	22.903	22.905	22.907	22.909	22.911	22.913	22.915	22.918
5540	22.920	22.922	22.924	22.926	22.928	22.930	22.932	22.934	22.936	22.938
5550	22.940	22.942	22.944	22.946	22.948	22.950	22.952	22.954	22.956	22.958
5560	22.961	22.963	22.965	22.967	22.969	22.971	22.973	22.975	22.977	22.979
5570	22.981	22.983	22.985	22.987	22.989	22.991	22.993	22.995	22.997	22.999
5580	23.001	23.003	23.005	23.007	23.010	23.012	23.014	23.016	23.018	23.020
5590	23.022	23.024	23.026	23.028	23.030	23.032	23.034	23.036	23.038	23.040
5600	23.042	23.044	23.046	23.048	23.050	23.052	23.054	23.056	23058	23.060
5610	23.063	23.065	23.067	23.069	23.071	23.073	23.075	23.077	23.079	23.081
5620	23.083	23.085	23.087	23.089	23.091	23.093	23.095	23.097	23.099	23.101
5630	23.103	23.105	23.107	23.109	23.111	23.113	23.115	23.117	23.119	23.121
5640	23.123	23.126	23.128	23.130	23.132	23.134	23.136	23.138	23.140	23.142
5650	23.144	23.146	23.148	23.150	23.152	23.154	23.156	23.158	23.160	23.162
5660	23.164	23.166	23.168	23.170	23.172	23.174	23.176	23.178	23.180	23.182
5670	23184	23.186	23.188	23.190	23.192	23.194	23.196	23.198	23.201	23.203
5680	23.205	23.207	23.209	23.211	23.213	23.215	23.217	23.219	23.221	23.223
5690	23.225	23.227	23.229	23.231	23.233	23.235	23.237	23.239	23.241	23.243
5700	23.245	23.247	23.249	23.251	23.253	23.255	23.257	23.259	23.261	23.263
5710	23.265	23.267	23.269	23.271	23.273	23.275	23.277	23.279	23.281	23.283
5720	23.285	23.287	23.289	23.291	23.293	23.295	23.297	23.299	23.301	23.303
5730	23.305	23.307	23.310	23.312	23.314	23.316	23.318	23.320	23.322	23.324
5740	23.326	23.328	23.330	23.332	23.334	23.336	23.338	23.340	23.342	23.344
5750	23.346	23.348	23.350	23.352	23.354	23.356	23.358	23.360	23.362	23.364
5760	23.366	23.368	23.370	23.372	23.374	23.376	23.378	23.380	23.382	23.384
5770	23.386	23.388	23.390	23.392	23.394	23.396	23.398	23.400	23.402	23.404
5780	23.406	23.408	23.410	23.412	23.414	23.416	23.418	23.420	23.422	23.424
5790	23.426	23.428	23.430	23.432	23.434	23.436	23.438	23.440	23.442	23.444
5800	23.446	23.448	23.450	23.452	23.454	23.456	23.458	23.460	23.462	23.464
5810	23.466	23.468	23.470	23.472	23.474	23.476	23.478	23.480	23.482	23.484
5820	23.486	23.488	23.490	23.492	23.494	23.496	23.498	23.500	23.502	23.504
5830	23.506	23.508	23.510	23.512	23.514	23.516	23.518	23.520	23.522	23.524
5840	23.526	23.528	23.530	23.532	23.534	23.536	23.538	23.540	23.542	23.544
5850	23.546	23.548	23.550	23.552	23.554	23.556	23.558	23.560	23.562	23.564
5860	23.566	23.568	23.570	23.572	23.574	23.576	23.578	23.580	23.582	23.584

3.Vertical Sync Separation

Adjustment purpose To set the timing of the vertical sync signal versus the input signal.

Symptom when incorrectly adjusted The odd and the even fields of the printed image are reversed.

Measuring instrument	Oscilloscope
Test point	CH1 : TP1 CH2 : TP3
EXT trigger	---
Measurement range	DIV : CH1 CH2 TIM : 10 μsec (DELAY mode)
Input signal	Video signal (Grey scale)
Input Terminal	VIDEO IN terminal

1.Supply a video signal (grey scale).
2.Connect CH1 of the oscilloscope to TP1 and CH2 to TP3.
3.Trigger in the falling edge of CH2.
4.Magnify the falling edge of CH2.
5.Adjust VR101 so that tv,in following figure, is 18± μsec.

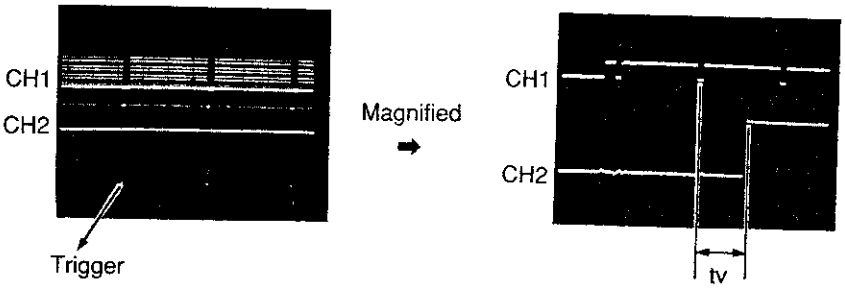

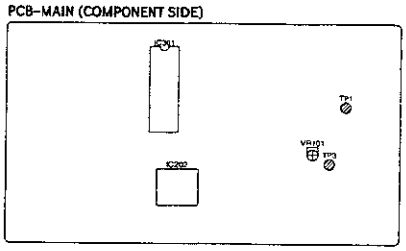

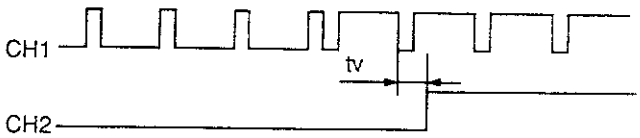

4.Horizontal Sync Pulse Width

Adjustment purpose To set the pulse width of the horizontal sync signal.

Symptom when incorrectly adjusted Horizontal position of the printed picture shifts to left or right when using a composite signal.

Measuring instrument	Oscilloscope
Test point	CH1:TP5
EXT trigger	---
Measurement range	DIV:0.1V TIM:1 μsec (DELAY mode)
Input signal	Video signal (Grey scale)
Input Terminal	VIDEO IN terminal

1.Supply a video signal (grey scale).
2.Check that #5: AFC switch of S101 (MODE) is in the "OFF" position.
3.Connect CH1 of the oscilloscope to TP5.
4.Trigger in the rising edge of CH1.
Magnify the pulse width (tp) of CH1 using delay sweep.
5.Adjust VR104 so that the pulse width of the waveform is tp=4.5±0.1 μsec.

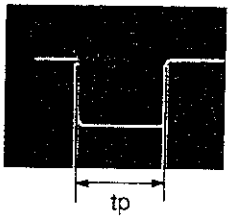

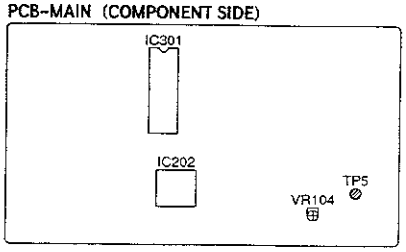

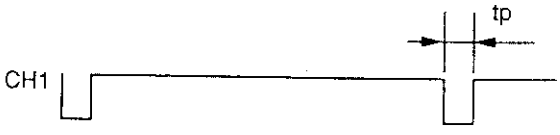

5. Horizontal AFC	**Adjustment purpose** To correct stabilize the horizontal AFC circuit when inputting video signal. **Symptom when incorrectly adjusted** Erratic horizontal sync. when inputting video signal.

Measuring instrument	Oscilloscope
Test point	CH1:TP1 CH2:TP5
EXT trigger	---
Measurement range	DIV:CH1 50mV CH2 0.2V TIM:2 μsec (DELAY mode)
Input signal	Video signal (Grey scale)
Input Terminal	VIDEO IN terminal

1.Supply a video signal (gray scale).
2.Check that #4: AFC switch of S101 (MODE) is on the "OFF" position.
3.Connect CH1 of the oscilloscope to TP1 and CH2 to TP5.
4.Trigger in the falling edge of CH2.
5.Magnify the falling edge of CH1 by using delay trigger and set it to the centre in the screen of the oscilloscope.
6.set the AFC to "ON". Adjust VR102 so that the phase difference between the centre of the screen and the falling edge of CH1 is ta=0±0.1 μsec. Then turn #5: AFT switch of the S101 (MODE) off.

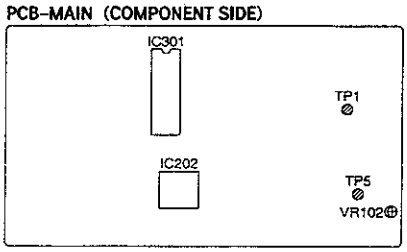

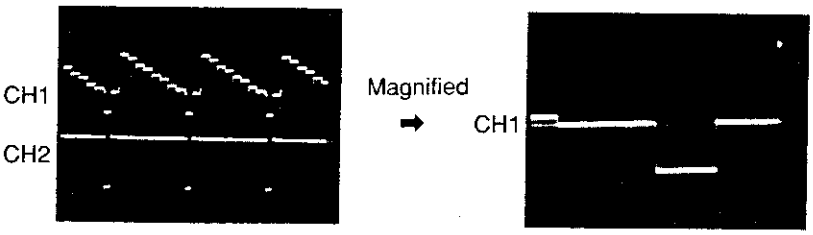

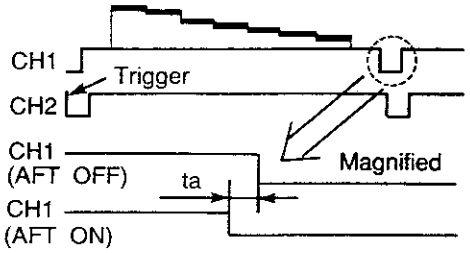

6.Horizontal position	**Adjustment purpose** To set the horizontal position for composite signal. **Symptom when incorrectly adjusted** Horizontal position of printed picture shifts to left or right when inputting composite signal.

Measuring instrument	Oscilloscope
Test point	CH1:TP1 CH2:TP4
EXT trigger	---
Measurement range	DIV:CH1 50mV CH2 0.2V TIM:1 μsec (DELAY mode)
Input signal	Video signal (Grey scale)
Input Terminal	VIDEO IN terminal

1.Supply a video signal (grey scale).
2.Check that #5: AFC switch of S101 (MODE) is in the "OFF" position.
3.Connect CH1 of the oscilloscope to TP1 and CH2 to TP4.
4.Trigger in the falling edge of CH2 and magnify that portion using delay sweep.
5.Adjust VR103 so that the phase difference between the falling edge of CH1 and the rising edge of CH2 is th=5.0±0.1 μsec.

PCB-MAIN (COMPONENT SIDE)

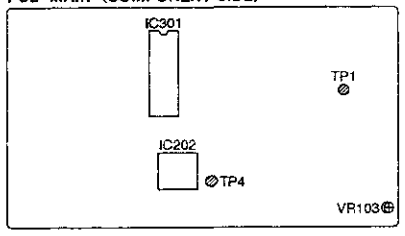

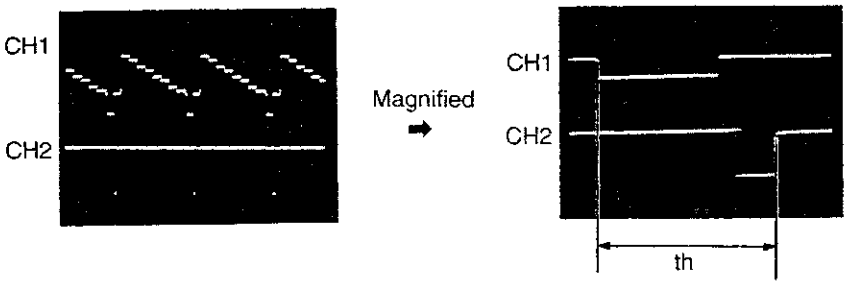

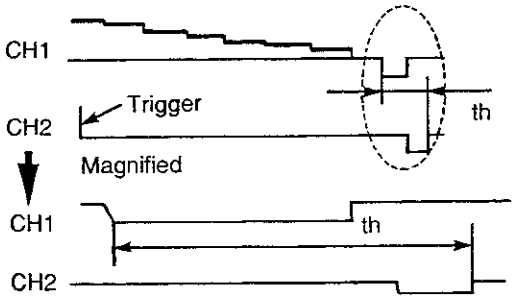

7.Clock frequency	**Adjustment purpose**	To set the oscillating frequency of the sampling clock oscillator.
	Symptom when incorrectly adjusted	Too wide or too narrow horizontal image printed.

Measuring instrument	Oscilloscope
Test point	CH1:TP1 CH2:TP6
EXT trigger	---
Measurement range	DIV:CH1 50mV CH2 0.1V TIM:1 μsec (DELAY mode)
Input signal	Video signal (Grey scale)
Input Terminal	VIDEO IN terminal

1.Supply a video signal (grey scale).
2.Press the GAMMA button to set the LED to "00" (stand-by mode).
3.Press the UP button to set the LED to "FP".
4.Connect CH1 of the oscilloscope to TP1 and CH2 to TP6.
5.Adjust L105 so that tH in the following figure is 0.55±0.1 μsec.

PCB-MAIN (COMPONENT SIDE)

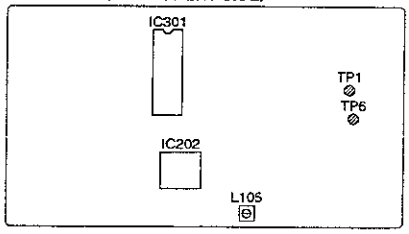

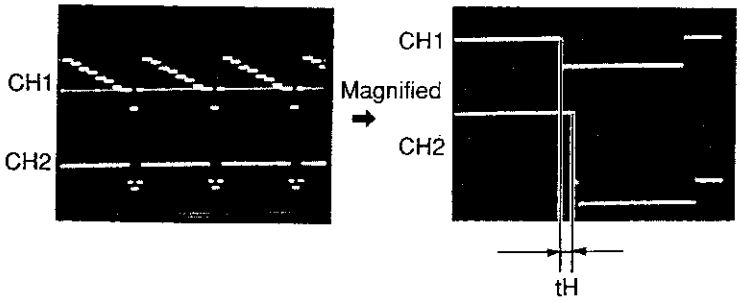

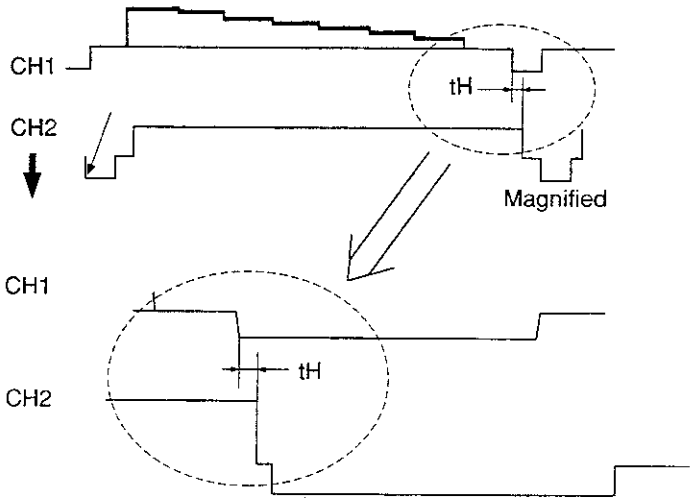

8.SUB-BRIGHT SUB-CONTRAST	**Adjustment purpose** To set the brightness and white level saturation of the input signal. **Symptom when incorrectly adjusted** Poor brightness, or poor contrast, level of the printed or memorized picture.

Measuring instrument	Oscilloscope
Test point	CH1:TP6 CH2:TP4
EXT trigger	---
Measurement range	DIV:10mV TIM:10 μsec
Input signal	Video Signal (Grey scale)
Input Terminal	VIDEO IN terminal

1.Supply a video signal (grey scale).
2.Select the service mode.
3.Press the CONT button three times to set the LED to "b5"
4.Connect CH1 of the oscilloscope to TP6 and CH2 to TP4.
5.Trigger in the rising of CH2.
6.Observe the waveform to TP6.
7.Press the UP and DOWN buttons so that Vb in the figure below is 0.05±0.01Vp-p.
8.Press the CONT button once to set the LED to "cc".
9.Press the UP and DOWN buttons so that Vc, in the figure below is 0.05±0.01Vp-p.

PCB-MAIN (COMPONENT SIDE)

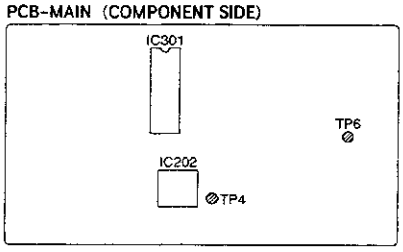

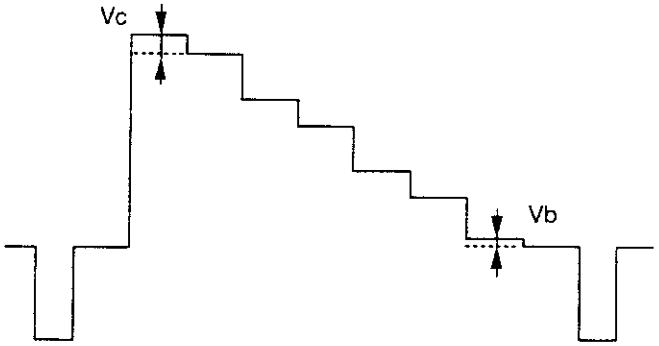

CHIP PARTS REPLACEMENT

CHIP PARTS REPLACEMENT

Some resistors, shorting jumpers (0Ω resistor), ceramic capacitors, transistors and diodes are chip parts which are used for certain circuit elements. When replacing these parts, note the following cautions.

Cautions:

A. Use fine tipped, well insulated soldering pencil (iron) about 30 watts and tweezers.
B. Melting the solder, remove the Chip Parts carefully not to tear off the copper foil of the printed circuit board.
C. Discard removed chips; do not reuse them.
D. Do not apply heat for more than 3 seconds to the new Parts.
E. Avoid using a rubbing stroke when soldering.
F. Take care not to scratch when soldering, or damage the Chip Parts.
G. Supplementary cementing is not required.

1 Removal of chip Parts
(Resistors, capacitors, etc.)

A. Grasp the part with tweezers. Melting the solder at both side alternately, remove the one side of the part with a twisting motion.
B. Melt the solder at the other side and remove the part.

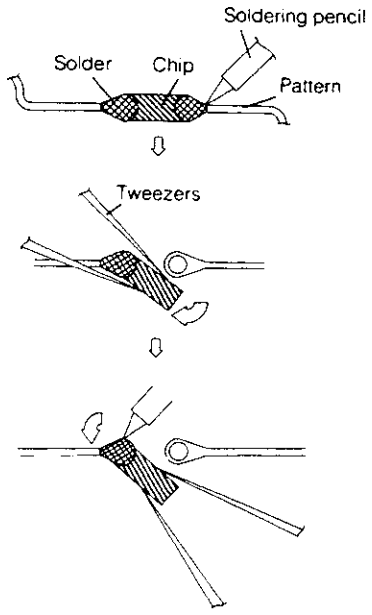

Fig. 1

2 Removal of Chip Parts (Transistors)

A. Melting the solder of one lead, Lift the side of that lead upward.
B. Simultaneously melt the solder of the two remaining leads and lift the part to remove.

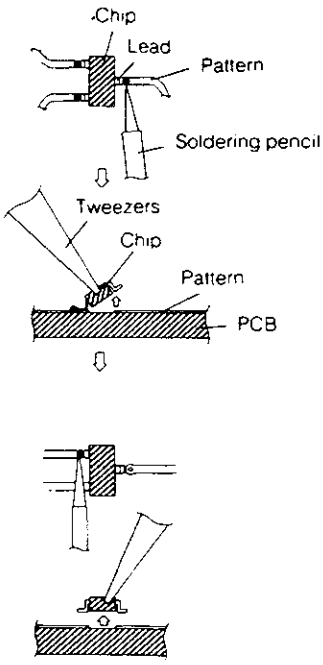

Fig. 2

3 Replacement

A. Presolder the contact points of the circuit pattern.
B. Press the part downward with tweezers and apply the soldering pencil as shown in the figure.

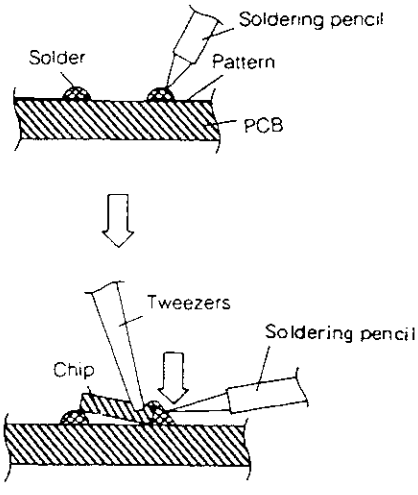

Fig. 3

PARTS LIST

MODEL : P67E

In order to expedite delivery of replacement part orders.

Specify : 1. Model number/Serial number
2. Part number and Description
3. Quantity

Unless full information is supplied, delay in execution of orders will result.

⚠ : Critical components

MARK	B	C	D	F	G	J	K
TOLERANCE (%)	± 0.1	± 0.25	± 0.5	± 1	± 2	± 5	± 10

MARK	M	N	V	X	Z	P	Q
TOLERANCE (%)	± 20	± 30	+ 10 − 10	+ 40 − 20	+ 80 − 20	+ 100 − 0	+ 30 − 10

MARK	B	C	D	F	G
TOLERANCE (pF)	± 0.1	± 0.25	± 0.5	± 1	± 2

SYMBOL NO.	PARTS NO.	PARTS NAME	DESCRIPTION
		INTEGRATED CIRCUITS	
IC101	272P499010	IC	HA11465A
IC102	272P529010	IC	L78N09
IC103	272P086020	IC	MB40576PF
IC104	272P087020	IC	MB40776PF/MB40776HPF
IC105	272P151010	IC	NJM2217L
IC107	263P485010	IC	MC74HC00AF
IC108	272P773010	IC	SN74LS221NS
IC110	272P603010	IC	NJM78L05A
IC202	274P401010	IC	μPD65647GD-020-5BD
IC203	274P399010	IC	HM514260ALZ-7
IC204	274P399010	IC	HM514260ALZ-7
IC205	263P185010	IC	μPD65050GF-126-3B9
IC206	274P398010	IC	M5M5256BFP-85
IC207	263P599010	IC	M62352GP
IC301	263P748010	IC	M50734SP
IC303	274P400030	IC	HN27C256AG-12
IC304	263P198010	IC	LC3564PM
IC305	272P357010	IC	PST529C (T529C)
IC308	272P175010	IC	M54567P
IC309	274P397010	IC	BR93LC56F
IC901	272P564010	IC	M51977P
IC951	272P240010	IC	M5237L
IC952	272P500010	IC	HA17431P
IC971	270P153010	IC	MC34063AP1
IC972	270P153010	IC	MC34063AP1
		TRANSISTORS	
Q 101	260P804030	CHIP TRANSISTOR	2SC3052-G
Q 102	260P804030	CHIP TRANSISTOR	2SC3052-G
Q 103	260P804030	CHIP TRANSISTOR	2SC3052-G
Q 104	260P806010	CHIP TRANSISTOR	DTA124EK
Q 105	260P849010	CHIP TRANSISTOR	IMZ1
Q 106	260P849010	CHIP TRANSISTOR	IMZ1
Q 107	260P849010	CHIP TRANSISTOR	IMZ1
Q 108	260P849010	CHIP TRANSISTOR	IMZ1
Q 109	260P802020	CHIP TRANSISTOR	2SA1235-F
Q 110	260P807010	CHIP TRANSISTOR	DTC124EK
Q 301	260P802020	CHIP TRANSISTOR	2SA1235-F
Q 302	260P802020	CHIP TRANSISTOR	2SA1235-F
Q 303	260P852010	CHIP TRANSISTOR	FMG2
Q 304	260P852010	CHIP TRANSISTOR	FMG2
Q 305	260P852010	CHIP TRANSISTOR	FMG2
Q 306	260P852010	CHIP TRANSISTOR	FMG2
Q 307	260P852010	CHIP TRANSISTOR	FMG2
Q 308	260P852010	CHIP TRANSISTOR	FMG2
Q 309	260P849010	CHIP TRANSISTOR	IMZ1
Q 310	260P849010	CHIP TRANSISTOR	IMZ1
Q 311	260P849010	CHIP TRANSISTOR	IMZ1
Q 312	260P849010	CHIP TRANSISTOR	IMZ1
Q 313	260P804030	CHIP TRANSISTOR	2SC3052-G
Q 314	260P804030	CHIP TRANSISTOR	2SC3052-G
Q 315	260P807010	CHIP TRANSISTOR	DTC124EK
Q 316	260P807010	CHIP TRANSISTOR	DTC124EK
Q 317	260P807010	CHIP TRANSISTOR	DTC124EK
Q 318	260P807010	CHIP TRANSISTOR	DTC124EK
Q 319	260P807010	CHIP TRANSISTOR	DTC124EK
Q 322	260P806010	CHIP TRANSISTOR	DTA124EK
Q 323	260P806010	CHIP TRANSISTOR	DTA124EK
Q 324	260P804030	CHIP TRANSISTOR	2SC3052-G
⚠ Q 901	260P700020	TRANSISTOR	2SK1462
Q 952	260P642030	TRANSISTOR	2SB883
		DIODES	
D 101	264P803010	CHIP DIODE	MC2838
D 102	264P803010	CHIP DIODE	MC2838
D 301	264P816050	CHIP DIODE	RD7.5MB2
D 302	264P803010	CHIP DIODE	MC2838
D 303	264P816050	CHIP DIODE	RD7.5MB2
D 304	264P816050	CHIP DIODE	RD7.5MB2
D 701	264P579020	LIGHT EMITTING DIODE	GL9E030
D 702	264P579020	LIGHT EMITTING DIODE	GL9E030
⚠ D 901	264P535010	DIODE	RBV-608
D 903	264P578010	DIODE	RG 2A
D 905	264P522010	DIODE	RU 1P
D 951	264P580010	DIODE	ESAC92M-02
D 957	264P045040	DIODE	1S2471
D 971	264P657010	DIODE	EK14V
D 972	264P657010	DIODE	EK14V
D 973	264P470060	DIODE	RD33EB2
D 974	264P045040	DIODE	1S2471
D 975	264P484040	DIODE	RD5.6FB3
D 976	264P045040	DIODE	1S2471
D 977	264P489010	DIODE	RD16FB1
D 978	264P045040	DIODE	1S2471
		FILTERS	
CF201	299P185010	CERAMIC RESONATOR	CSA20.00MXZ04
		COILS	
L 101	349P064020	TRAP COIL	3.58MHz
L 102	320P022020	TRAP COIL	4.43MHz
L 103	325C261030	PEAKING COIL	10μH-K
L 105	349P179050	OSCILLATOR COIL	
L 107	325C261030	PEAKING COIL	10μH-K
L 203	325C140090	CHIP COIL	4.7μH-M
⚠ L 901	351P047080	LINE FILTER	ELF-18D850T
L 951	351P114010	COIL	TM05141N7
L 970	411D021010	FERRITE CORE FILTER	
L 971	411D021010	FERRITE CORE FILTER	
L 972	411D021010	FERRITE CORE FILTER	
L 973	351P113010	COIL	220μH-K 1.1A
L 974	351P113010	COIL	220μH-K 1.1A
		TRANSFORMERS	
⚠ T 901	350P501010	POWER	