9049

SLV-D910AZ/D910B/D910E/D910N/D910R/ D950B/D950E/D950GI

RMT-V503A/V503B

SERVICE MANUAL

AEP Model

SLV-D910B/D910E/D910N/D950B/D950E

UK Model

SLV-D950GI

E Model

SLV-D910AZ

Russian Model

SLV-D910R

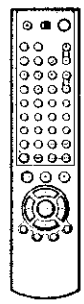

RMT-V503B

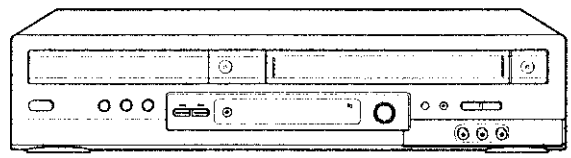

SLV-D950B

TS-10 MECHANISM

Refer to the SERVICE MANUAL of VHS MECHANICAL ADJUSTMENT MANUAL VII for MECHANICAL ADJUSTMENTS. (9-921-790-11)

SPECIFICATIONS

System

Laser
- Semiconductor laser

Signal format system
- PAL/(NTSC)
- SLV-D910B/D950B:
- SECAM
- SLV-D910B/D910N/D910R/D950B:
- MESECAM

Channel coverage

SLV-D910B/D910E/D950B/D950E:
- PAL (B/G):
  - VHF E2 to E12
  - VHF Italian channel A to H
  - UHF E21 to E69
  - CATV S01 to S05, S1 to S20
  - HYPER S21 to S41

SLV-D950GI:
- PAL (I):
  - VHF IA to IJ, SA10 to SA13
  - UHF B21 to B69
  - CATV S01 to S05, S1 to S20
  - HYPER S21 to S41

SLV-D910B/D950B:
- SECAM (L):
  - VHF F2 to F10
  - UHF F21 to F69
  - CATV B to Q
  - HYPER S21 to S41

SLV-D910N/D910R:
- PAL (B/G, D/K):
  - VHF E2 to E12, R1 R12
  - UHF E21 to E69, R21 - R69
  - CATV S01 to S05, S1 to S41

SLV-D910AZ:
- B/G: VHF E2 to E12/UHF E21 to E69/ CATV S01 to S05, S1 to S41
- B/B: VHF R1 to R12/UHF R21 to R69

RF output signal

SLV-D910E/D910N/D910R/D950E/D950GI:
- UHF channels 21 to 69

SLV-D910AZ:
- UHF channels 21 to 69 (B/G)
- UHF channels 28 to 69 (B/B)

Aerial out
- 75-ohm asymmetrical aerial socket

Tape speed

SP:	PAL	23.39 mm/s (recording/playback)
	NTSC	33.35 mm/s (playback only)
	SLV-D910B/D950B:	
	SECAM	23.39 mm/s (recording/playback)
	MESECAM	23.39 mm/s (playback only)
	SLV-D910N/D910R:	
	MESECAM	23.39 mm/s (recording/playback)

— Continued on next page —

DVD PLAYER/ VIDEO CASSETTE RECORDER

VHS Hi-Fi SHOWVIEW® VIDEOPlus+ COMPACT disc DIGITAL VIDEO DVD VIDEO

SONY®

LP: PAL 11.70 mm/s
(recording/playback)
NTSC 16.67 mm/s
(playback only)
SLV-D910B/D950B:
SECAM 11.70 mm/s
(recording/playback)
MESECAM 11.70 mm/s
(playback only)
SLV-D910N/D910R:
MESECAM 11.70 mm/s
(recording/playback)
EP: NTSC 11.12 mm/s
(playback only)
Maximum recording/playback time
10 hrs. in LP mode (with E300 tape)
Rewind time
Approx. 1 min. (with E180 tape)

Inputs and outputs

SLV-D910B/D910E/D910N/D910R/D950B/D950E/D950GI:
LINE-1 (EURO AV)
21-pin
Video input: pin 20
Audio input: pins 2 and 6
Video output: pin 19
Audio output: pins 1 and 3
LINE-2 IN -⊂ / -⊃ L/R
VIDEO IN, phono jack (1)
Input signal: 1 Vp-p, 75 ohms, unbalanced, sync negative
AUDIO IN, phono jacks (2)
Input level: 327 mVrms
Input impedance: more than 47 kilohms
LINE-3
21-pin
Video input: pin 20
Audio input: pins 2 and 6
OUT
VIDEO OUT, phono jack (1)
Output signal: 1 Vp-p, 75 ohms, unbalanced, sync negative
AUDIO OUT, phono jacks (2)
Standard output: 327 mVrms
Load impedance: 47 kilohms
Output impedance: less than 10 kilohms

SLV-D910AZ:
LINE IN1/LINE-2 IN
VIDEO IN, phono jack (1)
Input signal: 1 Vp-p, 75 ohms, unbalanced, sync negative
AUDIO IN, phono jacks (2)
Input level: 327 mVrms
Input impedance: more than 47 kilohms
LINE OUT
VIDEO OUT, phono jack (1)
Output signal: 1 Vp-p, 75 ohms, unbalanced, sync negative
AUDIO OUT, phono jacks (2)
Standard output: 327 mVrms
Load impedance: 47 kilohms
Output impedance: less than 10 kilohms

DIGITAL OUT (OPTICAL)
Optical output jack/–18 dBm
(wave length 660 nm)
DIGITAL OUT (COAXIAL)
Phono jack/0.5 Vp-p/75 ohms
S VIDEO OUT
4-pin mini DIN/Y: 1.0 Vp-p, C: 0.3 Vp-p (PAL), 0.286 Vp-p (NTSC)/75 ohms

SLV-D910AZ:
COMPONENT VIDEO OUT (Y, Cb, Cr)
phono jack
Y: 1.0 Vp-p/Cb, Cr: 0.7 Vp-p, 75 ohms

Timer section

Clock
Quartz locked
Timer indication
24-hour cycle
Timer setting
6 programs (max.)
SLV-D910AZ:
Power back-up
Back-up duration: up to 1 hour at a time

General

Power requirements
220 – 240 V AC, 50 Hz
Power consumption
25 W
Operating temperature
5 °C to 40 °C
Storage temperature
–20 °C to 60 °C
Dimensions including projecting parts and controls (w/h/d)
SLV-D910AZ/D950:
Approx. 430 × 95 × 333 mm
SLV-D910B/D910E/D910N/D910R:
Approx. 430 × 95 × 325 mm
Mass
Approx. 4.2 kg

Supplied accessories

Remote commander (1)
R6 (size AA) batteries (2)
Aerial cable (1)
Audio cord (pinplug ×2 ⟷ pinplug ×2) (1)
Video cord (pinplug ×1 ⟷ pinplug ×1) (1)

Design and specifications are subject to change without notice.

SAFETY CHECK-OUT

After correcting the original service problem, perform the following safety checks before releasing the set to the customer:

1. Check the area of your repair for unsoldered or poorly-soldered connections. Check the entire board surface for solder splashes and bridges.
2. Check the interboard wiring to ensure that no wires are "pinched" or contact high-wattage resistors.
3. Look for unauthorized replacement parts, particularly transistors, that were installed during a previous repair. Point them out to the customer and recommend their replacement.
4. Look for parts which, though functioning, show obvious signs of deterioration. Point them out to the customer and recommend their replacement.
5. Check the B+ voltage to see it is at the values specified.

WARNING!!

WHEN SERVICING, DO NOT APPROACH THE LASER EXIT WITH THE EYE TOO CLOSELY. IN CASE IT IS NECESSARY TO CONFIRM LASER BEAM EMISSION, BE SURE TO OBSERVE FROM A DISTANCE OF MORE THAN 25 cm FROM THE SURFACE OF THE OBJECTIVE LENS ON THE OPTICAL PICK-UP BLOCK.

CAUTION:
The use of optical instrument with this product will increase eye hazard.

CAUTION
Use of controls or adjustments or performance of procedures other than those specified herein may result in hazardous radiation exposure.

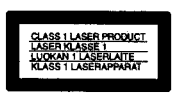

This appliance is classified as a CLASS 1 LASER product. The CLASS 1 LASER PRODUCT MARKING is located on the rear exterior.

SAFETY-RELATED COMPONENT WARNING!!

COMPONENTS IDENTIFIED BY MARK ⚠ OR DOTTED LINE WITH MARK ⚠ ON THE SCHEMATIC DIAGRAMS AND IN THE PARTS LIST ARE CRITICAL TO SAFE OPERATION. REPLACE THESE COMPONENTS WITH SONY PARTS WHOSE PART NUMBERS APPEAR AS SHOWN IN THIS MANUAL OR IN SUPPLEMENTS PUBLISHED BY SONY.

Unleaded solder

Boards requiring use of unleaded solder are printed with the lead-free mark (LF) indicating the solder contains no lead.
(Caution: Some printed circuit boards may not come printed with the lead free mark due to their particular size.)

LF : LEAD FREE MARK

Unleaded solder has the following characteristics.

- Unleaded solder melts at a temperature about 40°C higher than ordinary solder.
  Ordinary soldering irons can be used but the iron tip has to be applied to the solder joint for a slightly longer time.
  Soldering irons using a temperature regulator should be set to about 350°C.
  Caution: The printed pattern (copper foil) may peel away if the heated tip is applied for too long, so be careful!
- Strong viscosity
  Unleaded solder is more viscous (sticky, less prone to flow) than ordinary solder so use caution not to let solder bridges occur such as on IC pins, etc.
- Usable with ordinary solder
  It is best to use only unleaded solder but unleaded solder may also be added to ordinary solder.

3 ESD PRECAUTIONS

Electrostatically Sensitive Devices (ESD)

Some semiconductor (solid state) devices can be damaged easily by static electricity.
Such components commonly are called Electrostatically Sensitive Devices (ESD). Examples of typical ESD devices are integrated circuits and some field-effect transistors and semiconductor chip components. The following techniques should be used to help reduce the incidence of component damage caused by static electricity.

(1) Immediately before handling any semiconductor component or semiconductor-equipped assembly, drain off any electrostatic charge on your body by touching a known earth ground. Alternatively, obtain and wear a commercially available discharging wrist strap device, which should be removed for potential shock reasons prior to applying power to the unit under test.

(2) After removing an electrical assembly equipped with ESD devices, place the assembly on a conductive surface such as aluminum foil, to prevent electrostatic charge buildup or exposure of the assembly.

(3) Use only a grounded-tip soldering iron to solder or unsolder ESD devices.

(4) Use only an anti-static solder removal devices. Some solder removal devices not classified as "anti-static" can generate electrical charges sufficient to damage ESD devices.

(5) Do not use freon-propelled chemicals. These can generate electrical charges sufficient to damage ESD devices.

(6) Do not remove a replacement ESD device from its protective package until immediately before your are ready to install it. (Most replacement ESD devices are packaged with leads electrically shorted together by conductive foam, aluminum foil or comparable conductive materials).

(7) Immediately before removing the protective materials from the leads of a replacement ESD device, touch the protective material to the chassis or circuit assembly into which the device will be installed.

CAUTION: Be sure no power is applied to the chassis or circuit, and observe all other safety precautions.

(8) Minimize bodily motions when handling unpackaged replacement ESD devices. (Otherwise harmless motion such as the brushing together of your clothes fabric or the lifting of your foot from a carpeted floor can generate static electricity sufficient to damage an ESD device).

4 HANDLING THE OPTICAL PICK-UP

The laser diode in the optical pick up may suffer electrostatic breakdown because of potential static electricity from clothing and your body.

The following method is recommended.
(1) Place a conductive sheet on the work bench (The black sheet used for wrapping repair parts.)

(2) Place the set on the conductive sheet so that the chassis is grounded to the sheet.

(3) Place your hands on the conductive sheet(This gives them the same ground as the sheet.)

(4) Remove the optical pick up block

(5) Perform work on top of the conductive sheet. Be careful not to let your clothes or any other static sources to touch the unit.

- Be sure to put on a wrist strap grounded to the sheet.
- Be sure to lay a conductive sheet made of copper etc. Which is grounded to the table.

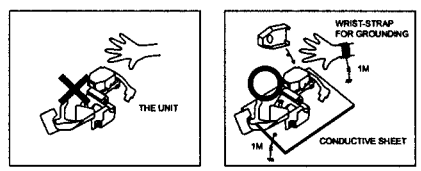

Fig.3

(6) Short the short terminal on the PCB, which is inside the Pick-Up ASS'Y, before replacing the Pick-Up. (The short terminal is shorted when the Pick-Up Ass'y is being lifted or moved.)

(7) After replacing the Pick-up, open the short terminal on the PCB.

5 PICK-UP DISASSEMBLY AND REASSEMBLY

5-1 Disassembly

1) Remove the power cord.
2) Disassemble the Deck-Assy.
3) Make solder land 2 points short on Pick-up. (See Fig. 4)
4) Disassembly the Pick-up.

5-2 Assembly

1) Replace the Pick-up.
2) Remove the soldering 2 points on Pick-up.
3) Reassemble the Deck-Assy.

Note: If the assembly and disassembly are not done in correct sequence, the Pick-up may be damaged.

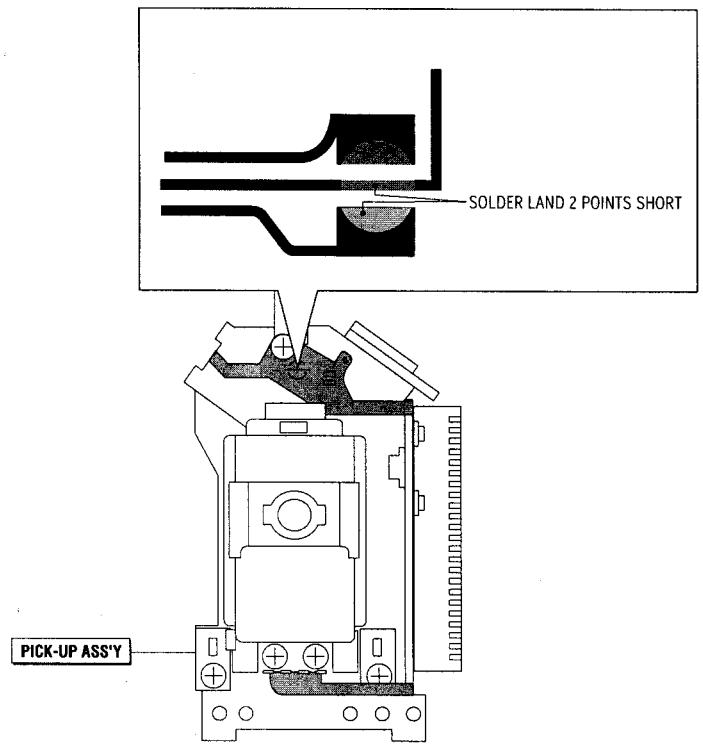

Fig. 4

1. GENERAL

This section is extracted from SLV-D910B/D950B instruction manual. (3-084-916-E2)

Getting Started

Step 1 : Unpacking

Check that you have received the following items with the DVD-VCR:

- Remote commander
- PERITEL cable
- R6 (size AA) batteries
- Audio cord (pinplug ×2 ⟷ pinplug ×2)
- Aerial cable
- Video cord (pinplug ×1 ⟷ pinplug ×1)

Check your model name

The instructions in this manual are for the 2 models: SLV-D950B and SLV-D910B. Check your model name by looking at the rear panel of your DVD-VCR.
SLV-D950B is the model used for illustration purposes. Any difference in operation is clearly indicated in the text, for example, "SLV-D950B only".

Step 2 : Setting up the remote commander

Inserting the batteries

Insert two size AA (R6) batteries by matching the + and – on the batteries to the diagram inside the battery compartment.

Insert the negative (–) end first, then push in and down until the positive (+) end clicks into position.

Using the remote commander

You can use this remote commander to operate this DVD-VCR and a Sony TV. Buttons on the remote commander marked with a dot (•) can be used to operate your Sony TV.
If the TV does not have the ■ symbol near the remote sensor, this remote commander will not operate the TV.

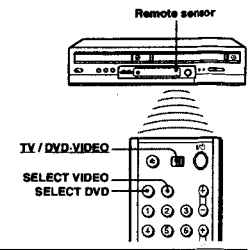

To operate	Set TV / DVD-VIDEO to
the DVD player	DVD-VIDEO, then press SELECT DVD and point at the remote sensor at the DVD-VCR
the VCR	DVD-VIDEO, then press SELECT VIDEO and point at the remote sensor at the DVD-VCR
your TV	TV and point at the remote sensor at your TV

Notes

- With normal use, the batteries should last about three to six months.
- If you do not use the remote commander for an extended period of time, remove the batteries to avoid possible damage from battery leakage.
- Do not use a new battery with an old one.
- Do not use different types of batteries.
- Do not leave the remote commander in an extremely hot or humid place.
- Do not drop any foreign object into the remote casing, particularly when replacing the batteries.
- Do not expose the remote sensor to direct light from the sun or lighting apparatus. Doing so may cause a malfunction.

continued

Controlling other TVs with the remote commander

The remote commander is preprogrammed to control non-Sony TVs. If your TV is listed in the following table, set the appropriate manufacturer's code number.

1 Set TV / DVD-VIDEO at the top of the remote commander to TV.

2 Hold down I/⏻, and enter your TV's code number using the number buttons. Then release I/⏻.

Now you can use the I/⏻, VOL +/–, PROG +/–, MUTING*, TV/VIDEO, 0-9 and -/--* buttons to control your TV. You can also use the buttons marked with a dot (•) to control a Sony TV. To control the DVD-VCR, reset TV / DVD-VIDEO to DVD-VIDEO.

* for Sony TV only

Code numbers of controllable TVs

If more than one code number is listed, try entering them one at a time until you find the one that works with your TV.

Manufacturer	Code number
Sony	01, 02
Akai	68
Ferguson	52
Grundig	10, 11
Hitachi	24
JVC	33
Loewe	45,
Mivar	09, 70
NEC	66
Nokia	15, 16, 69

Manufacturer	Code number
Panasonic	17, 49
Philips	06, 07, 08
Saba	12, 13
Samsung	22, 23
Sanyo	25
Sharp	29
Telefunken	36
Thomson	43
Toshiba	38

Notes

- If you enter a new code number, the code number previously entered will be erased.
- If the TV uses a different remote control system from the one programmed to work with the DVD-VCR, you cannot control your TV with the remote commander.
- When you replace the batteries of the remote commander, the code number may change. Set the appropriate code number every time you replace the batteries.

Step 3 : Connecting the DVD-VCR

Note that "Advanced Hookups" (page 59) explains additional hookup methods that will optimize the picture and sound for a true "hometheatre" experience.

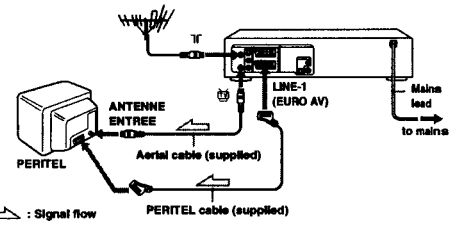

1 Disconnect the aerial cable from your TV and connect it to Ψ on the rear panel of the DVD-VCR.

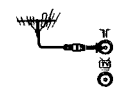

2 Connect 📺 of the DVD-VCR and the aerial input of your TV using the supplied aerial cable.

3 Connect LINE-1 (EURO AV) on the DVD-VCR and the PERITEL connector on the TV with the supplied PERITEL cable.

This connection improves picture and sound quality. Whenever you want to watch the DVD-VCR picture, press TV/VIDEO to display the VCR indicator in the display window.

4 Connect the mains lead to the mains.

continued

Additional connection

To a satellite or digital tuner with Line Through

Using the Line Through function, you can watch programmes from a satellite or digital tuner connected to this DVD-VCR on the TV even when the DVD-VCR is turned off. When you turn on the satellite or digital tuner, this DVD-VCR automatically sends the signal from the satellite or digital tuner to the TV without turning itself on.

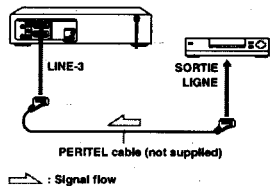

1 Connect the satellite or digital tuner to the LINE-3 connector as shown above.

2 Turn off the DVD-VCR.

To watch a programme, turn on the satellite or digital tuner and the TV.

Notes

- This function may not work with some types of satellite or digital tuners.
- When the DVD-VCR is turned off, set the TV to the video channel.

Step 4 : Setting up the DVD-VCR with the Auto Set Up function

Before using the DVD-VCR for the first time, set up the DVD-VCR using the Auto Set Up function. With this function, you can set TV channels, guide channels for the ShowView system*, and DVD-VCR clock automatically.

* SLV-D950B only

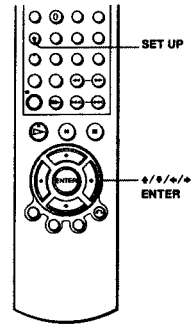

1 Turn on your TV and set it to the video channel.

2 Connect the mains lead to the mains.

The DVD-VCR automatically turns on and the "SELECTION DU PAYS" menu appears.

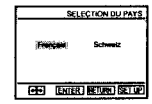

continued

3 Press ↑/↓ to select your country, then press ENTER.

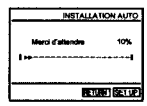

The DVD-VCR starts searching for all of the receivable channels and presets them (in the appropriate order for your local area).

If you want to change the order of the channels or disable unwanted programme positions, see "Changing/disabling programme positions" on page 21.

After the search is complete, the current time appears for any stations that transmit a time signal. If the time does not appear, set the clock manually. See "Setting the clock" on page 16.

To cancel the Auto Set Up function

Press SET UP.

Tip

- If you want to change the language for the on-screen display from the one preset in the Auto Set Up function, see page 15.

Notes

- Whenever you operate the Auto Set Up function, some of the settings (ShowView, timer, etc.) will be reset. If this happens, you have to set them again.
- Auto preset starts automatically only when you plug in the mains lead for the first time after you purchase the DVD-VCR.
- If you want to use the Auto Set Up function again, select "Installation" in the "OPTION" menu, then press ↑/↓ to select "Installation Auto", then repeat step 3.
- Auto preset can be performed by pressing ■ on the unit continuously for 5 seconds or more during power off with no tape inserted.

Step 5 : Selecting a language

If you prefer an on-screen language other than French, use the on-screen display to select another language.

Before you start...

- Turn on the DVD-VCR and your TV.
- To control the DVD-VCR, set TV / DVD-VIDEO to DVD-VIDEO on the remote (page 9).
- Set your TV to the video channel so that the signal from the player appears on the TV screen.
- If the DVD player is in play mode, you cannot display the setup menu. Stop the DVD playback.

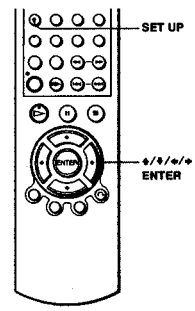

1 SET UP

Press SET UP, then press ↑/↓ to select ■ (OPTION) and press ENTER.

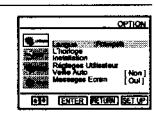

2

Press ↑/↓ to select "Langue", then press ENTER.

The "SELECTION LANGUE" menu appears.

3 Press ↑/↓ to select the desired language, then press ENTER.

4 SET UP

Press SET UP to exit the menu.

Step 6 : Setting the clock

You must set the time and date on the DVD-VCR to use the timer features properly.

The Auto Clock Set function works only if a station in your area is broadcasting a time signal.

Before you start...

- Turn on the DVD-VCR and your TV.
- To control the DVD-VCR, set TV / DVD-VIDEO to DVD-VIDEO on the remote (page 9).
- Set your TV to the video channel so that the signal from the player appears on the TV screen.
- If the DVD player is in play mode, you cannot display the setup menu. Stop the DVD playback.

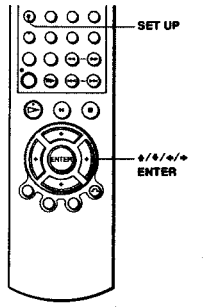

1 SET UP

Press SET UP, then press ↑/↓ to select ■ (OPTION) and press ENTER.

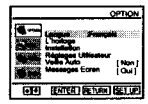

2

Press ↑/↓ to select "L'horloge", then press ENTER.

The "REGLAGE HORLOGE" menu appears.

3

Press ↑/↓ to set the hour.

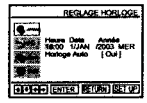

4

Press → to select the minutes and set the minutes by pressing ↑/↓.

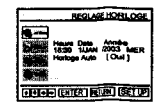

5

Set the day, month, and year in sequence by pressing → to select the item to be set, and press ↑/↓ to select the digits, then press →.

The day of the week is set automatically.

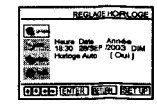

6

Press ↑/↓ to select "Oui" for the setting of the Auto Clock Set function.

The DVD-VCR automatically sets the clock according to the time signal broadcast between the channels PR 1 to PR 5.

If you do not need the Auto Clock Set function, select "Non".

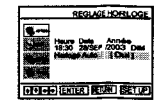

7

Press ENTER to confirm the setting.

8 SET UP

Press SET UP to exit the menu.

Tips

- If you set "Horloge Auto" to "Oui", the Auto Clock Set function is activated whenever the DVD-VCR is turned off. The time is adjusted automatically by making reference to the time signal from the station.
- To change the digits while setting, press → to return to the item to be changed, and select the digits by pressing ↑/↓.

Note

- The clock display appears when VIDEO mode is selected with no tape inserted or when the DVD-VCR is turned off.

Step 7 : Presetting channels

If some channels could not be preset using the Auto Set Up function, you can preset them manually.

Before you start...

- Turn on the DVD-VCR and your TV.
- To control the DVD-VCR, set TV / DVD-VIDEO to DVD-VIDEO on the remote (page 9).
- Set your TV to the video channel so that the signal from the player appears on the TV screen.
- If the DVD player is in play mode, you cannot display the setup menu. Stop the DVD playback.

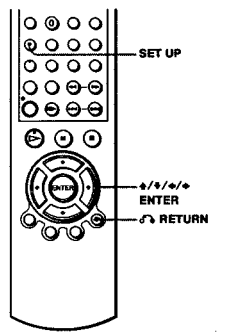

1 SET UP

Press SET UP, then press ↑/↓ to select ■ (OPTION) and press ENTER.

2

Press ↑/↓ to select "Installation", then press ENTER.

The "INSTALLATION" menu appears.

3

Press ↑/↓ to select "Installation Manuelle", then press ENTER.

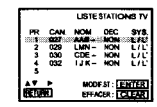

4

Press ↑/↓ to select the row which you want to preset, then press →.

To display other pages for programme positions 6 to 80, press ↑/↓ repeatedly.

5

Press ↑/↓ to select "SYS." if necessary.

6

Press →/← to set "L/L'" or "B/G" if necessary.

- To receive broadcast in France, select "L/L'".
- To receive broadcast using the PAL system (for example, in Germany or Switzerland), select "B/G".

7

Press ↑/↓ to select "CANAL", then press →/← repeatedly until the channel you want is displayed.

8

Press ↑/↓ to select "NOM", then press →.

continued

9 Enter the station name.

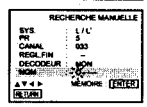

1 Press ♦/♦ to select a character.
Each time you press ♦, the character changes as shown below.
A → B → ... → Z → 0 → 1 → ... → 9 → A

2 Press ♦ to set the next character.
The next space flashes.
To correct a character, press ♦/♦ until the character you want to correct flashes, then reset it.
You can set up to 4 characters for the station name.

10 Press ENTER to confirm the station name.

11 Press ↩ RETURN, then press SET UP to exit the menu.

RETURN

SET UP

If the picture is not clear

If the picture is not clear, you may use the Manual Fine Tuning (REGL.FIN) function. After step 7, press ♦/♦ to select "REGL.FIN". Press ♦/♦ to get a clear picture. Then press ENTER.

Tips

- To set the programme position for the decoder, see "Setting the Canal Plus decoder" on page 27.
- The DVD-VCR must receive channel information for station names to appear automatically.

Note

- When adjusting REGL.FIN, the menu may become difficult to read due to interference from the picture being received.

Changing/disabling programme positions

After setting the channels, you can change the programme positions as you like. If any programme positions are unused or contain unwanted channels, you can disable them.

You can also change the station names. If the station names are not displayed, you can enter them manually.

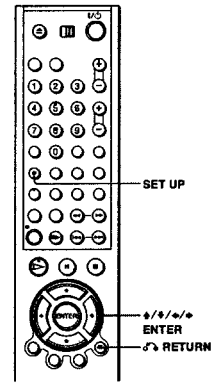

Changing programme positions

Before you start...

- Turn on the DVD-VCR and your TV.
- To control the DVD-VCR, set TV / DVD-VIDEO to DVD-VIDEO on the remote (page 9).
- Set your TV to the video channel so that the signal from the player appears on the TV screen.
- If the DVD player is in play mode, you cannot display the setup menu. Stop the DVD playback.

1 SET UP

Press SET UP, then press ♦/♦ to select ■ (OPTION) and press ENTER.

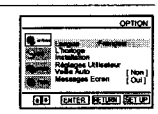

2 Press ♦/♦ to select "Installation", then press ENTER.
The "INSTALLATION" menu appears.

continued

3 Press ♦/♦ to select "Installation Manuelle", then press ENTER.

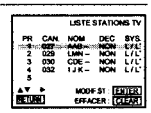

4 Press ♦/♦ to select the row containing the programme position you want to change.
To display other pages for programme positions 6 to 80, press ♦/♦ repeatedly.

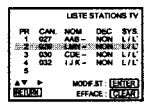

5 Press ENTER, then press ♦/♦ to move to the desired programme position.

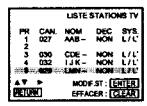

6 Press ENTER to confirm the setting.
To change the programme position of another station, repeat steps 4 through 6.

7 Press ↩ RETURN, then press SET UP to exit the menu.

RETURN

SET UP

Disabling unwanted programme positions

After presetting channels, you can disable unused programme positions. The disabled positions will be skipped later when you press the PROG +/– buttons.

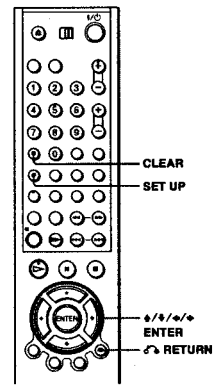

Before you start...

- Turn on the DVD-VCR and your TV.
- To control the DVD-VCR, set TV / DVD-VIDEO to DVD-VIDEO on the remote (page 9).
- Set your TV to the video channel so that the signal from the player appears on the TV screen.
- If the DVD player is in play mode, you cannot display the setup menu. Stop the DVD playback.

1 SET UP

Press SET UP, then press ♦/♦ to select ■ (OPTION) and press ENTER.

2 Press ♦/♦ to select "Installation", then press ENTER.
The "INSTALLATION" menu appears.

continued

3 Press ♦/♦ to select "Installation Manuelle", then press ENTER.

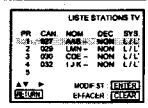

4 Press ♦/♦ to select the row which you want to disable.

To display other pages for programme positions 6 to 80, press ♦/♦ repeatedly.

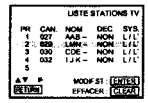

5 CLEAR

Press CLEAR.

The selected row will be cleared as shown on the right.

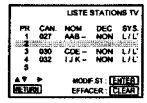

6 Repeat steps 4 and 5 for any other programme positions you want to disable.

7 RETURN

SET UP

Press ↶ RETURN, then press SET UP to exit the menu.

Note

- Be sure to select the programme position you want to disable correctly. If you disable a programme position by mistake, you need to reset that channel manually.

Changing the station names

You can change or enter the station names (up to 4 characters). The DVD-VCR must receive channel information for station names to appear automatically.

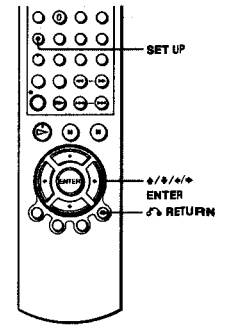

Before you start...

- Turn on the DVD-VCR and your TV.
- To control the DVD-VCR, set TV / DVD-VIDEO to DVD-VIDEO on the remote (page 9).
- Set your TV to the video channel so that the signal from the player appears on the TV screen.
- If the DVD player is in play mode, you cannot display the setup menu. Stop the DVD playback.

1 SET UP

Press SET UP, then press ♦/♦ to select ■ (OPTION) and press ENTER.

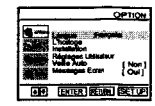

2 Press ♦/♦ to select "Installation", then press ENTER.

The "INSTALLATION" menu appears.

3 Press ♦/♦ to select "Installation Manuelle", then press ENTER.

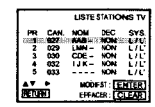

continued

4 Press ♦/♦ to select the row which you want to change or enter the station name, then press ♦.

To display other pages for programme positions 6 to 80, press ♦/♦ repeatedly.

5 Press ♦/♦ to select "NOM", then press ♦.

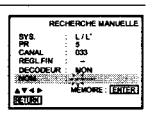

6 Enter the station name.

1 Press ♦/♦ to select a character.
Each time you press ♦, the character changes as shown below.
A → B → ... → Z → 0 → 1 → ... → 9 → A

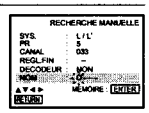

2 Press ♦ to set the next character.
The next space flashes.
To correct a character, press ♦/♦ until the character you want to correct flashes, then reset it.

You can set up to 4 characters for the station name.

7 Press ENTER to confirm the new name.

8 RETURN

SET UP

Press ↶ RETURN, then press SET UP to exit the menu.

Setting the Canal Plus decoder

You can watch or record Canal Plus programmes if you connect a decoder (not supplied) to the DVD-VCR.

Connecting a decoder

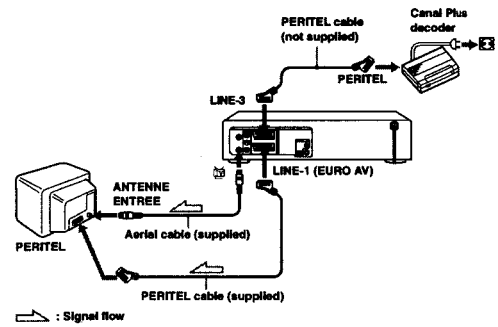

continued

Setting Canal Plus channels

To watch or record Canal Plus programmes, set your DVD-VCR to receive the channels using the on-screen display.

In order, set the channels correctly, be sure to follow all of the steps below.

Before you start...

- Turn on the DVD-VCR and your TV.
- To control the DVD-VCR, set TV / DVD-VIDEO to DVD-VIDEO on the remote (page 9).
- Set your TV to the video channel so that the signal from the player appears on the TV screen.
- If the DVD player is in play mode, you cannot display the setup menu. Stop the DVD playback.

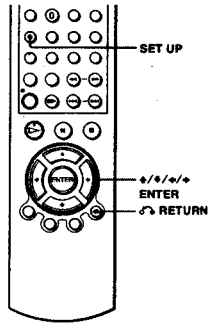

1 SET UP

Press SET UP, then press ↑/↓ to select (OPTION) and press ENTER.

2

Press ↑/↓ to select "Installation", then press ENTER.

The "INSATLLATION" menu appears.

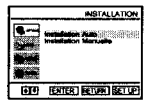

3

Press ↑/↓ to select "Installation Manuelle", then press ENTER.

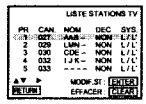

4

Press ↑/↓ to select the row which you want to set for the decoder, then press →.

To display positions 6 to 80, press ↑/↓ repeatedly.

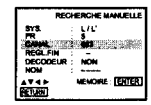

5

Press ↑/↓ to select "SYS." if necessary.

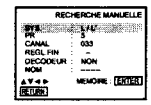

6

Press →/← to set "L/L'" or "B/G" if necessary.

- To receive broadcast in France, select "L/L'".
- To receive broadcast using the PAL system (for example, in Germany or Switzerland), select "B/G".

7

Press ↑/↓ to select "DECODEUR".

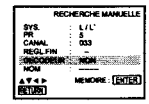

8

Press → to set "DECODEUR" to "OUI", then press ENTER.

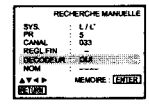

9 RETURN / SET UP

Press ↩ RETURN, then press SET UP to exit the menu.

continued

Notes

- To superimpose subtitles while watching Canal Plus programmes, make both decoder-VCR and VCR-TV connections using 21-pin PERITEL cables that are compatible with the RGB signals. You cannot record subtitles on the VCR.
- When you watch Canal Plus programmes through the RFU input of the TV, press TV/VIDEO so that the VCR indicator appears in the display window.

Basic Operations

Playing discs DVD VCD CD DATA-CD

Depending on the disc, some operations may be different or restricted. Refer to the operating instructions supplied with your disc.

Before you start...

- Turn on the DVD-VCR and your TV.
- Set your TV to the video channel so that the signal from the player appears on the TV screen.
- Set TV / DVD-VIDEO to DVD-VIDEO, then press SELECT DVD to control the DVD player (page 9).

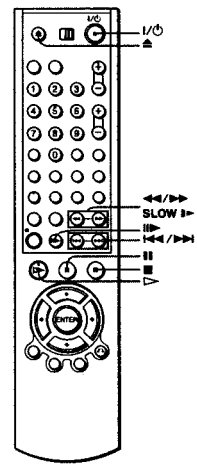

1

Press ⏏ to open the disc tray and place a disc on the disc tray.

with the playback side facing down

continued

2 Press ▷.

The disc tray closes and the DVD player starts playback. The display window shows the playback time.*
Depending on the disc, a menu may appear on the TV screen. For DVDs, see page 73. For VIDEO CDs, see page 93.

* "– – – –" appears when no disc is loaded.

Additional tasks

To	Press
Stop play	■
Pause play*	II
Resume play after pause	II or ▷
Advance by frame in pause mode	II▶
Go to the next chapter, track, or scene in continuous play mode	▶▶I on the remote
Go back to the previous chapter, track, or scene in continuous play mode	I◀◀ on the remote
Stop play and remove the disc	⏏

* If you pause the DVD player for more than 5 minutes, the DVD player will automatically stop.

To Resume playback for the current disc (Resume Play)

The DVD player remembers the point where you stopped the disc even if the DVD player enters standby mode by pressing I/⏻.

1 While playing a disc, press ■ to stop playback.

2 Press ▷.

The DVD player starts playback from the point where you stopped the disc in step 1.

Tip

- To begin playback from the top of the disc, press ■ twice then press ▷.

Notes on playing DVDs with a DTS sound track

- DTS audio signals are output only through the DIGITAL AUDIO OUT (COAXIAL or OPTICAL) jack.
- When you play a DVD with DTS sound tracks, set "DTS" to "Oui" in "Options Audio" menu (page 63).
- If you connect the player to audio equipment without a DTS decoder, do not set "DTS" to "Oui" in "Options Audio" menu (page 63). A loud noise may come out from the speakers, affecting your ears or causing the speakers to be damaged.

* "DTS" and "DTS Digital Out" are trademarks of Digital Theater Systems, Inc.

To locate a point quickly by playing a disc in fast forward or fast reverse in continuous play mode (DVD, VIDEO CD and CD only)

Press ◀◀ or ▶▶.
For DVD or VIDEO CD, each time you press the button, the playback speed changes as follows.
×2 → FF1/FR1 → FF2/FR2 → FF3/FR3 → FF4/FR4 (DVD only) → FF5/FR5 (DVD only)
Release the button at the desired speed.

For CD, the searching speed does not change (FF2/FR2 play).

When you find the point you want, press ▷.

To watch slow motion in continuous play mode (DVD and VIDEO CD only)

Press II, then press ▶▶ SLOW II▶. With each press, the playback speed changes cyclically as follows.

→ 1/8 → 1/4 → 1/2 →

To resume normal playback, press ▷.

Tip

- To make a video timer reservation during DVD playback, we recommend performing the operations under "Quick Timer Recording" (page 96).

Notes

- You can change the screen type using the "REGLAGE DE L'ECLAN" menu. (See "Screen Setup" on page 65.)
- Do not perform VIDEO playback while playing back a disc.
- If you play a DVD or VIDEO CD that has scratches, the player may stop playback at the point of the scratch or skip to the next track.
- You cannot change the MP3 or the Multi Session CD playback speed.
- VIDEO CD fast forward/reverse cannot be paused.
- During CD fast forward/reverse play, no sound is output.

Notes on playing DTS* sound tracks on a CD

- When playing DTS-encoded CDs, excessive noise will be heard from the analog stereo jacks. To avoid possible damage to the audio system, the consumer should take proper precautions when the analog stereo jacks of the DVD player are connected to an amplification system. To enjoy DTS Digital Surround™ playback, an external 5.1-channel decoder system must be connected to the digital jack of the DVD player.
- Set the sound to "STEREO" using the AUDIO button when you play DTS sound tracks on a CD (page 82).
- Do not play DTS sound tracks without first connecting the DVD player to an audio component having a built-in DTS decoder. The DVD player outputs the DTS signal via the DIGITAL AUDIO OUT (COAXIAL or OPTICAL) jack even if "DTS" is set to "Non" in "Options Audio" menu (page 63), and may affect your ears or cause your speakers to be damaged.

continued

Guide to the on-screen display

DVD VCD CD DATA-CD

You can check disc information during playback.

The displayed contents differ according to the type of disc being played.

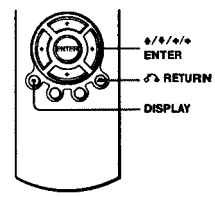

Press DISPLAY. The following information appears; type of disc, current title/track, chapter, counter position, voice language, subtitle language and surround setting. Refer to "DVD Audio/Subtitle Language" on page 126 for the abbreviation of the language.

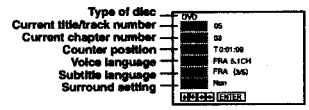

You can playback the desired title/track, chapter or counter position using this menu.

To playback the desired title/track or chapter

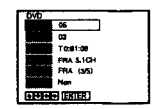

1 Press ♦/♦ to select the desired item.

2 Press ♦/♦ to change the item.

3 Press ENTER to start playback.

4 Press DISPLAY or ↩ RETURN to turn off the menu.

The title/track or chapter icon will appear on the DVD playback screen followed by the current title/track or chapter number and the counter position.

continued

To playback from the desired title/track counter position

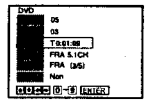

1 Press ↑/↓ to select the counter position icon.

2 Enter the desired elapsed playing time of the current title/track using the number buttons.

3 Press ENTER to start playback.

4 Press DISPLAY or ↩ RETURN to turn off the menu.

Tip

- You can change the counter position information (playing time or remaining time) using ↑/↓ (DVD and CD only).

DVD

Indication	Counter information
T ∗ : ∗∗ : ∗∗	Elapsed playing time of the current title
T– ∗ : ∗∗ : ∗∗	Remaining time of the current title
C ∗ : ∗∗ : ∗∗	Elapsed playing time of the current chapter
C– ∗ : ∗∗ : ∗∗	Remaining time of the current chapter

CD

Indication	Counter information
T ∗ : ∗∗ : ∗∗	Elapsed playing time of the current track
T– ∗ : ∗∗ : ∗∗	Remaining time of the current track
D ∗ : ∗∗ : ∗∗	Elapsed playing time of the disc
D– ∗ : ∗∗ : ∗∗	Remaining time of the disc

Notes

- The display may not change as operated depending on the disc.
- The display window continue indicating the playing time even when the counter position information on the on-screen display is being changed.

Additional tasks

To	Press
Stop play	■
Pause play*	II
Resume play after pause	II or ▷
Fast-forward the tape	▶▶ during stop
Rewind the tape	◀◀ during stop
Eject the tape	⏏

* If you pause the VCR for more than 5 minutes, the VCR will automatically resume play.

To play a recently watched scene

You can immediately rewind and playback the scene you want to watch again.

To skip playback

You can skip a scene that you do not want to watch (such as a commercial) and restart playback.

During playback, press II▶ STEP. The VCR skips the tape 30 seconds on the counter each time the button is pressed (up to four times) and playback is resumed.

To turn off the power while rewinding (Rewind Shut Off)

Press I/⏻ while the tape is rewinding. The power will turn off, but the tape will keep rewinding until it reaches the end.

To play/search at various speeds

Playback options	Operation
View the picture during fast-forward or rewind	During fast-forward, hold down ▶▶. During rewind, hold down ◀◀.
Play at high speed	• During playback, briefly press ▶▶ or ◀◀. The tape continues to play at 5 times normal speed. • During playback, hold down ▶▶ or ◀◀. The tape continues to play at 5 times normal speed. When you release the button, normal playback resumes.
Play in slow motion	During pause, press ▶▶ SLOW I▶.
Play frame by frame	During pause, press II▶ STEP.
Play at various speeds (Shuttle play)	During playback, press I◀◀ or ▶▶I. You can change the playback speed as follows. REVIEW*1 ⟷ –×2 ⟷ –×1 ⟷ –SLOW ⟷ STILL ⟷ SLOW ⟷ PLAY ⟷ ×2 ⟷ CUE*1

*1 "REW" flashes in the display window.
*2 "FF" flashes in the display window.

Playing a tape VHS

Before you start...

- Turn on the DVD-VCR and your TV.
- Set your TV to the video channel so that the signal from the player appears on the TV screen.
- Set TV / DVD-VIDEO to DVD-VIDEO, then press SELECT VIDEO to control the VCR (page 9).

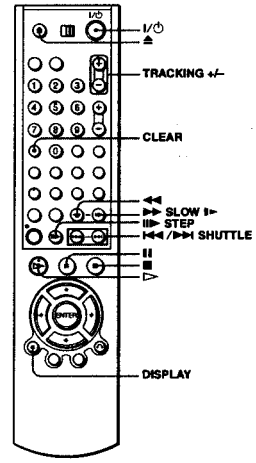

1 Insert a tape.

The VCR starts playing automatically if you insert a tape with its safety tab removed.

2 Press ▷.

The display window shows the playback time.

When the tape reaches the end, it will rewind automatically.

continued

To resume normal playback

Press ▷.

To set the colour system

If the playback picture has no colour, or streaks appear during palyback, set the "Syst. Couleur" option in the "REGLAGES UTILISATEUR" menu to conform to the system that the tape was recorded in (see page 110) (Normally set the option to "Auto").

To use the time counter

Press CLEAR at the point on the tape that you want to find later. The counter in the display window resets to "0:00:00".

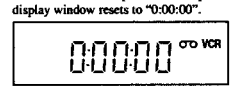

To display the counter on the TV screen, press DISPLAY during normal playback.

Tip

- Adjust the picture using the TRACKING +/– buttons if:
  - Streaks appear while playing in slow motion.
  - Bands appear at the top or bottom while pausing.
  - The picture shakes during pause.

Notes

- Tapes recorded in the LP mode on other VCRs can be played back on this VCR but the picture quality cannot be guaranteed.
- The counter resets to "0:00:00" whenever a tape is reinserted.
- The counter stops counting when it comes to a portion with no recording.
- Depending on your TV, the following may occur while playing an NTSC-recorded tape:
  - The picture becomes black and white.
  - The picture shakes.
  - No picture appears on the TV screen.
  - Black streaks appear horizontally on the TV screen.
  - The colour density increases or decreases.
- When 10 hours have passed, the counter in the display window returns to "0:00:00" and the count starts over again.
- The sound is muted during playback at various speeds.
- The picture may show noise when playing at high speed in reverse.
- While playing a tape, you can display the setup menu, but the remote commander's function switches to DVD automatically. Press SET UP to exit the menu.
- Stop disc playback while playing back a video.
- The picture returns to normal playback from slow motion in reverse in 30 seconds.

Recording TV programmes VHS

Before you start...

- Turn on the DVD-VCR and your TV.
- Switch the input selector on your TV so that the signal from the player appears on the TV screen.
- Set TV / DVD-VIDEO to DVD-VIDEO, then press SELECT VIDEO to control the VCR (page 9).
- To record from a decoder, turn it on.
- Make sure the tape is longer than the total recording time.

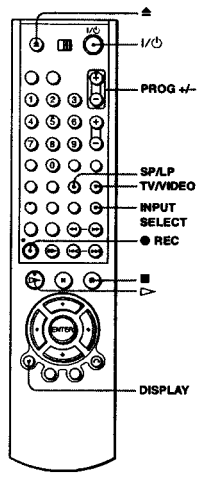

1 Insert a tape with its safety tab in place.

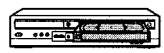

2 PROG/ TRACKING

- To record a normal channel, press PROG +/– until the programme position number you want appears in the display window.

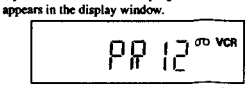

INPUT SELECT

- To record from a decoder or other source connected to one or more of the LINE inputs, press INPUT SELECT until the connected line appears in the display window.

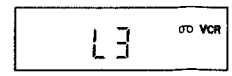

3 SP / LP

Press SP/LP to select the tape speed, SP or LP.

LP (Long Play) provides recording time twice as long as SP. However, SP (Standard Play) produces better picture and audio quality.

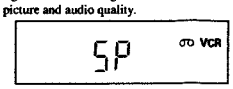

4 ●REC

Press ● REC to start recording.

The recording indicator lights up red in the display window.

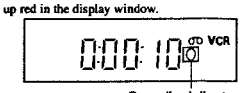

Recording indicator

To stop recording

Press ■.

To check the remaining time

Press DISPLAY twice. With the display on, press DISPLAY again to check the remaining time.

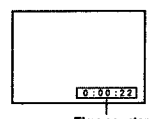

Time counter

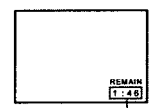

Remaining tape length

continued

In order to get an accurate remaining time indication, be sure "Sélect. Cassette" in the "REGLAGE DE LA FONCTION VIDEO" menu is set according to the tape type you use (see page 105).

Maximum Recording Time

Tape Length	SP	LP
E-180	3 hrs	6 hrs
E-240	4 hrs	8 hrs
E-260	4 hrs 20 mins	8 hrs 40 mins
E-300	5 hrs	10 hrs

To watch another TV programme while recording

1 Press TV/VIDEO to display "TV" in the display window.

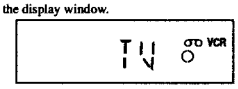

2 Select another channel on the TV.

To watch a DVD while recording

1 Press SELECT DVD to control the DVD player.

2 Press ⏏ and place the disc on the disc tray.

3 Press ▷.

The disc tray closes and the DVD player starts playback. The TV screen will automatically change to the DVD playback screen.

To save a recording

To prevent accidental erasure, break off the safety tab as illustrated. To record on the tape again, cover the tab hole with adhesive tape.

Safety tab

Tips

- To select a programme position, you can use the number buttons on the remote commander. For two-digit numbers, for example, press 2 and 3 to select "PR 23".
- If you connect additional equipment to a LINE connector or jack, you can select the input signal using the INPUT SELECT or PROG +/– buttons.
- The DISPLAY information appears on the TV screen indicating information about the tape, but the information will not be recorded on the tape.
- If you do not want to watch TV while recording, you can turn off the TV. When using a decoder, make sure to leave it on.

Notes

- If a tape has portions recorded in both PAL (SECAM, MESECAM) and NTSC systems, the time counter reading will not be correct. This discrepancy is due to the difference between the counting cycles of the two video systems.
- You cannot watch a Canal Plus programme while recording another Canal Plus programme.
- When you insert a non-standard commercially available tape, the remaining time may not be correct.
- The remaining time is intended for rough measurement only.
- About 30 seconds after the tape begins playback, the tape remaining time will be displayed.
- You cannot record a DVD to a VCR tape.
- To watch a TV programme during video recording, stop disc playback.

Recording TV programmes using the ShowView® system (SLV-D950B only) VHS

The ShowView system is the feature that simplifies programming the VCR to make timer recordings. Just enter the ShowView number listed in the TV programme guide. The date, times, and programme position of that programme are set automatically. You can preset a total of six programmes, including settings made with other timer methods.

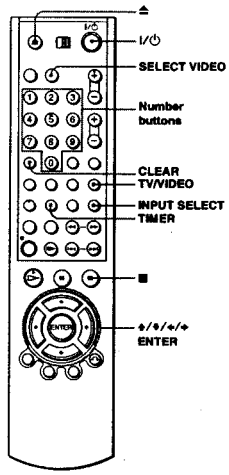

Before you start...

- Check that the DVD-VCR clock is set to the correct time.
- Turn on the DVD-VCR and your TV.
- Set your TV to the video channel so that the signal from the player appears on the TV screen.
- Set TV/DVD-VIDEO to DVD-VIDEO, then press SELECT VIDEO to control the VCR (page 9).
- When using a decoder, turn it on.
- Insert tape with its safety tab in place. Make sure the tape is longer than the total recording time.

1 SUBTITLE/TIMER

Press TIMER.

The "OPTIONS PROG." menu appears.

2 ENTER

Press ♦/♦ to select "ShowView", then press ENTER.

The "ShowView" menu appears.

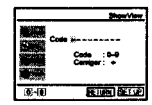

3 1 2 3 4 5 6 7 8 9 0

Press the number buttons to enter the ShowView number.

If you make a mistake, press CLEAR and re-enter the correct number.

You can also press ♦ to delete the last entered number.

CLEAR

ENTER

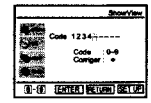

4 ENTER

INPUT SELECT

CLEAR

Press ENTER.

The date, start and stop times, programme position, tape speed and VPS (Video Programme System)/PDC (Programme Delivery Control) setting appear on the TV screen.

- If "– –" appears in the "PR" (programme) column (this may happen for local broadcasts), you have to set the appropriate programme position manually. Press ♦/♦ to select the desired programme position.
- To record from a decoder or other source connected to one or more of the LINE inputs, press INPUT SELECT to display the connected line in the "PR" position.

You will only have to do this operation once for the referred channel. The VCR will then store your setting.

If the information is incorrect, press CLEAR to cancel the setting.

Basic Operations

continued

5 ENTER

If you want to change the date, tape speed and the VPS/PDC setting:

1 Press ♦/♦ to select the item you want to change.
2 Press ♦/♦ to reset it.

- To record the same programme every day or the same day every week, see "Daily/weekly recording" on page 46.
- To use the VPS/PDC function, set "V/P" to "Oui". For details about the VPS/PDC function, see "Timer recording with VPS/PDC signals" on page 46.

6 ENTER

Press ENTER to confirm the setting.

7 ENTER

Press ENTER to confirm all settings.

8 I/⏻

Press I/⏻ to turn off the DVD-VCR.

The ⏲ indicator appears in the display window and the VCR stands by for recording.

To record from a decoder or other source, leave the connected equipment switched on.

To stop recording

To stop the DVD-VCR while recording, press SELECT VIDEO and then press ■.

Daily/weekly recording

In step 5 above, press ♦ to select the recording pattern. Each time you press ♦, the indication changes as shown below. Press ♦ to change the indication in reverse order.

today → JOUR (Monday to Sunday) → S-SA (every Saturday) ..... → S-DI (every Sunday) → 1 month later → (dates count down) → today

Timer recording with VPS/PDC signals

Some broadcast systems transmit VPS or PDC signals with their TV programmes. These signals ensure that your timer recordings are made regardless of broadcast delays, early starts, or broadcast interruptions.

To use the VPS/PDC function, set "V/P" to "Oui" in step 5 above. You can also use the VPS/PDC function for a source connected to one or more of the LINE inputs.

To watch another TV programme after setting the timer

1 Press TV/VIDEO to display "TV" in the display window.

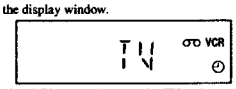

2 If your TV is connected to the VCR using A/V connections, set the TV to the TV's aerial input; if not, skip this step.

3 Select another channel on the TV.

Tips

- To set the channel, you can also use the ♦/♦ or number buttons.
- If the ○ indicator appears, this means that the VCR is currently recording this programme.
- You can also do the following tasks while the VCR is recording:
  - Reset the counter (page 39).
  - Display tape information on the TV screen (page 41).

To use the Auto Tape Speed function

In step 5 above, press ♦ to select "Auto". When you are recording a programme in the SP mode and the remaining tape length becomes shorter than the recording time, the recording tape speed is automatically changed to the LP mode. Note that some noise will appear on the picture when the tape speed is changed. To operate this function correctly, the "Sélect. Cassette" setting in the "REGLAGE DE LA FONCTION VIDEO" menu must be accurate (see page 105).

Tips

- To set the line input video source, you can also use the INPUT SELECT button.
- You can set the extended time for the ShowView setting by 10, 20, 30, 40, 50, or 60 minutes. Set "Etendre ShowView" in the "REGLAGES UTILISATEUR" menu to the desired extended time on page 110.
- To check, change, or cancel the programme setting, see "Checking/changing/cancelling timer settings" on page 56.

Notes

- If the VPS/PDC signal is too weak or the broadcasting station failed to transmit VPS/PDC signals, the VCR will start recording at the set time without using the VPS/PDC function.
- The ⏲ indicator flashes in the display window when you press I/⏻ with no tape inserted.

Basic Operations

Recording TV programmes using the timer

VHS

You can preset up to six programmes at a time.

Before you start...

- Check that the DVD-VCR clock is set to the correct time.
- Turn on the DVD-VCR and your TV.
- Switch the input selector on your TV so that the signal from the player appears on the TV screen.
- Set TV / DVD-VIDEO to DVD-VIDEO, then press SELECT VIDEO to control the VCR (page 9).
- When using a decoder, turn it on.
- Insert a tape with its safety tab in place. Make sure the tape is longer than the total recording time.
- If the DVD player is in play mode, you cannot display the setup menu. Stop the DVD playback.

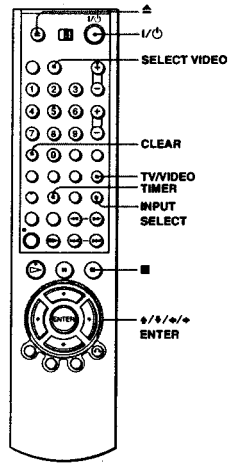

1 SUBTITLE/ TIMER

Press TIMER.

- SLV-D950B
  The "OPTIONS PROG." menu appears.

- SLV-D910B
  The timer programming menu appears. Step 2 is skipped.

2 ENTER

SLV-D950B only
Press ♦/♦ to select "Normal", then press ENTER.

The timer programming menu appears.

3 ENTER

Set the date, start and stop times, programme position, tape speed and VPS/PDC function:

1 Press ♦ to select each item in turn.
2 Press ♦/♦ to set each item.

To correct a setting, press ♦ to return to that setting and reset.

- To record the same programme every day or the same day every week, see "Daily/weekly recording" on page 50.
- To use the VPS/PDC function, set "V/P" to "Oui." For details about the VPS/PDC function, see "Timer recording with VPS/PDC signals" on page 46.
- To record from a decoder or other source connected to one or more of the LINE inputs, press INPUT SELECT to display the connected line in the "PR" position.

INPUT SELECT

4 ENTER

Press ENTER to confirm the setting.

To enter another setting, press ♦/♦ to select the next row and repeat step 3.

Press CLEAR to cancel the setting.

CLEAR

continued

5 ENTER

Press ENTER to confirm all settings.

6 I/⏻

Press I/⏻ to turn off the DVD-VCR.

The ⏲ indicator appears in the display window and the VCR stands by for recording.

To record from a decoder or other source, leave the connected equipment switched on.

To stop recording

To stop the DVD-VCR while recording, press SELECT VIDEO and then press ■.

Daily/weekly recording

In step 3 above, press ♦ to select the recording pattern. Each time you press ♦, the indication changes as shown below. Press ♦ to change the indication in reverse order.

today → JOUR (Monday to Sunday) → S-SA (every Saturday) ..... → S-DI (every Sunday) → 1 month later → (dates count down) → today

To use the Auto Tape Speed function

In step 3 above, press ♦ to select "Auto". When you are recording a programme in the SP mode and the remaining tape length becomes shorter than the recording time, the recording tape speed is automatically changed to the LP mode. Note that some noise will appear on the picture when the tape speed is changed. To operate this function correctly, the "Sélect. Cassette" setting in the "REGLAGE DE LA FONCTION VIDEO" menu must be accurate (see page 105).

Tips

- To set the line input video source, you can also use the INPUT SELECT button.
- To check, change, or cancel the programme setting, see "Checking/changing/cancelling timer settings" on page 56.

Notes

- When setting the timer with VPS/PDC signals, enter the start times exactly as indicated in the TV programme guide. Otherwise, the VPS/PDC function will not work.
- If the VPS/PDC signal is too weak or the broadcasting station failed to transmit VPS/PDC signals, the VCR will start recording at the set time without using the VPS/PDC function.
- The ⏲ indicator flashes in the display window when you press I/⏻ with no tape inserted.

To watch another TV programme after setting the timer

1 Press TV/VIDEO to display "TV" in the display window.

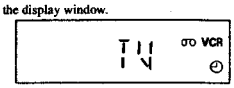

2 If your TV is connected to the VCR using A/V connections, set the TV to the TV's aerial input; if not, skip this step.

3 Select another channel on the TV.

Tips

- To set the channel, you can also use the ♦/♦ or number buttons.
- If the ○ indicator appears, this means that the VCR is currently recording this programme.
- You can also do the following tasks while the VCR is recording:
  – Reset the counter (page 39).
  – Display tape information on the TV screen (page 41).

Recording TV programmes using DIAL TIMER (SLV-D950B only) VHS

The Dial Timer function allows you to make timer recordings of programmes without turning on your TV. Set the recording timer to record up to six programmes that will be broadcast within a month using DIAL TIMER. The recording start time and recording stop time can be set at one minute intervals.

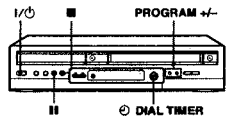

Before you start...

- Turn on the DVD-VCR.
- When using a decoder, turn it on.
- Insert a tape with its safety tab in place. Make sure the tape is longer than the total recording time.
- Stop the DVD-VCR.

1 DIAL TIMER Press DIAL TIMER.

DATE indicator appears and the current date flashes in the display window.

If the date and time are not set, DAY indicator will appear. To set the date and time, see "To set the clock" on page 55.

2 DIAL TIMER Turn DIAL TIMER to set the recording date.

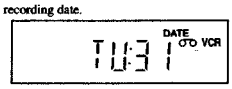

3 DIAL TIMER Press DIAL TIMER to set the start time.

"START" and the next quarter hour increment appear alternately in the display window.

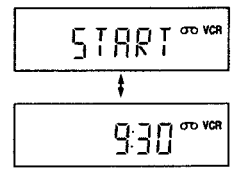

4 DIAL TIMER Turn DIAL TIMER to set the recording start time.

You can set the recording start time in 15 minute intervals or adjust the time in one minute intervals by pressing the PROGRAM +/– buttons on the unit.

PROGRAM

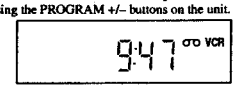

5 DIAL TIMER Press DIAL TIMER to set the stop time.

"STOP" and the next quarter hour increment appear alternately in the display window.

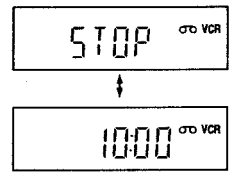

6 DIAL TIMER Turn DIAL TIMER to set the recording stop time.

You can set the recording stop time in 15 minute intervals or adjust the time in one minute intervals by pressing the PROGRAM +/– buttons on the unit.

PROGRAM

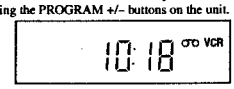

continued

7 DIAL TIMER Press DIAL TIMER.

The current programme position number flashes in the display window.

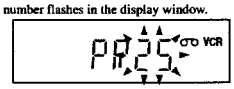

8 DIAL TIMER Turn DIAL TIMER to set the programme position number.

To record from a source connected to the LINE-1 connector, LINE-2 IN jacks or LINE-3 connector, turn DIAL TIMER or press INPUT SELECT to display "L1", "L2" or "L3".

INPUT SELECT

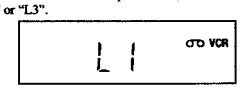

9 DIAL TIMER Press DIAL TIMER.

The current tape speed flashes in the display window.

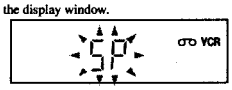

10 DIAL TIMER Turn DIAL TIMER to set the tape speed.

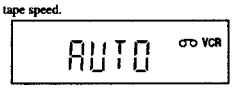

11 DIAL TIMER Press DIAL TIMER to complete the setting.

"OK" appears in the display window for about five seconds.

The timer indicator appears in the display window and the VCR stands by for recording. When using a decoder, leave it on.

To return to the previous step

To return to the previous step, press the PROGRAM + and – buttons on the unit at the same time during any of the Dial Timer settings.

To set the clock

1. Hold down DIAL TIMER so that DAY indicator appears in the display window. However, if the clock has already been set, the current setting appears.
2. Turn DIAL TIMER to set the day.
3. Press DIAL TIMER.
   MONTH indicator appears in the display window.
4. Turn and press DIAL TIMER to set the month and then the year.
   After you set the year, "CLOCK" appears in the display window.
5. Turn and press DIAL TIMER to set the hour and minute.
6. When you have finished setting the time, press DIAL TIMER to start the clock.

Tips

- To cancel a Dial Timer setting, press any button other than DIAL TIMER or PROGRAM +/– on the unit or any button on the remote while you are making the setting.
- To check, change, or cancel the programme setting, see "Checking/changing/cancelling timer settings" on page 56.

Notes

- If six programmes have already been set using the ShowView system or the manual timer setting, "FULL" appears in the display window for about five seconds.
- If you set the clock using the Auto Clock Set feature, the clock will adjust itself to the incoming time signal regardless of adjustments made with DIAL TIMER. Be sure you have set Auto Clock Set correctly.
- If you are setting the clock for the first time or "0:– –" appears in the display window, you cannot set the clock to February 29th using DIAL TIMER. Please use the Auto Clock Set feature to set the VCR to this day.
- The timer indicator flashes in the display window when you complete the setting in step 11 on page 54 with no tape inserted.
- When the setting time is incorrect, "Error" appears in the display window in step 11. Set the timer again from step 1.

About the Demonstration Mode

The Dial Timer function has a Demonstration Mode that allows the user, such as a salesperson, to enter more than six examples of timer settings when demonstrating the use of DIAL TIMER. It cancels the FULL notice which appears if six programmes have already been set. Do not use the Demonstration Mode for making timer recordings. Doing so may cause the settings to be inaccurate.

To activate the Demonstration Mode

Press II on the unit while turning DIAL TIMER. "DEMO" appears in the display window for a few seconds.

To cancel the Demonstration Mode

Turn the power off and unplug the mains lead. Although the Demonstration Mode is cancelled, the timer settings entered while using the Demonstration Mode will remain. Be sure to manually cancel the timer settings before you use DIAL TIMER or any other timer method after reconnecting the mains lead (page 56).

Checking/changing/cancelling timer settings VHS

Before you start...

- Check that the DVD-VCR clock is set to the correct time.
- Turn on the DVD-VCR and your TV.
- Switch the input selector on your TV so that the signal from the player appears on the TV screen.
- Set TV / DVD-VIDEO to DVD-VIDEO, then press SELECT VIDEO to control the VCR (page 9).
- When using a decoder, turn it on.
- Insert a tape with its safety tab in place. Make sure the tape is longer than the total recording time.
- If the DVD player is in play mode, you cannot display the setup menu. Stop the DVD playback.

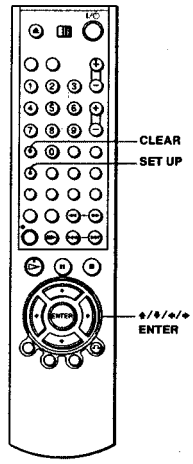

1 SET UP

Press SET UP, then press ↑/↓ to select ■ (TIMER) and press ENTER.

- SLV-D950B
  The "OPTIONS PROG." menu appears.
- SLV-D910B
  The timer programming menu appears. Step 2 is skipped.

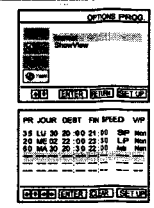

2 SET UP

SLV-D950B only
Press ↑/↓ to select "Normal", then press ENTER.

- If you want to change a setting, go on to the next step.
- If you do not need to change the settings, press SET UP to exit the menu.

3 CLEAR

Press ↑/↓ to select setting you want to change or cancel.

- To change the setting, press ←/→ to flash the item you want to change, and press ↑/↓ to change it.
- To cancel the setting, press CLEAR.

4

Press ENTER to confirm the setting.
If any settings remain, turn off the VCR to return to recording standby.

Basic Operations

continued

When the timer settings overlap

The programme that starts first has priority and the second programme starts recording only after the first programme has finished. If the programmes start at the same time, the programme listed first in the menu has priority.

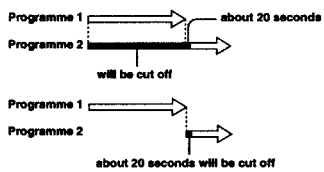

Advanced Hookups

A/V Receiver hookup DVD VCD CD DATA-CD VHS

A Use this hookup if your A/V receiver has a Dolby* Surround (Pro Logic) decoder and 3 to 6 speakers

You can enjoy the Dolby Surround effects only when playing Dolby Surround audio or multi-channel audio (Dolby Digital) discs.

* Manufactured under license from Dolby Laboratories. "Dolby," "Pro Logic," and the double-D symbol are trademarks of Dolby Laboratories.

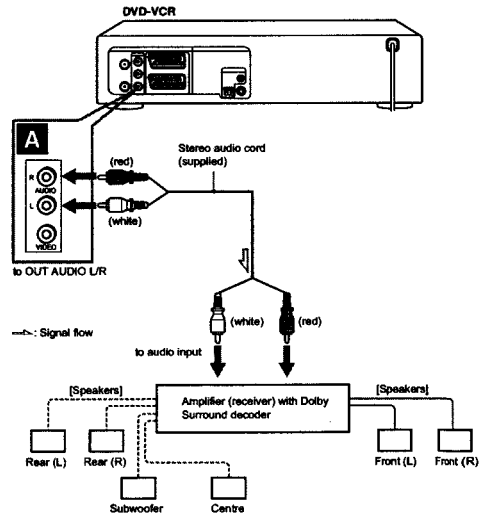

Advanced Hookups

continued

B Use this hookup if your A/V receiver has a Dolby Digital, MPEG audio or DTS+ decoder, a digital input jack and 6 speakers

This connection will allow you to use the Dolby Digital, MPEG audio or DTS decoder function of your AV amplifier (receiver). You are not able to enjoy the surround sound effects of this player. You must make connections using B-1 and B-2.

• "DTS" and "DTS Digital Out" are trademarks of Digital Theater Systems, Inc.

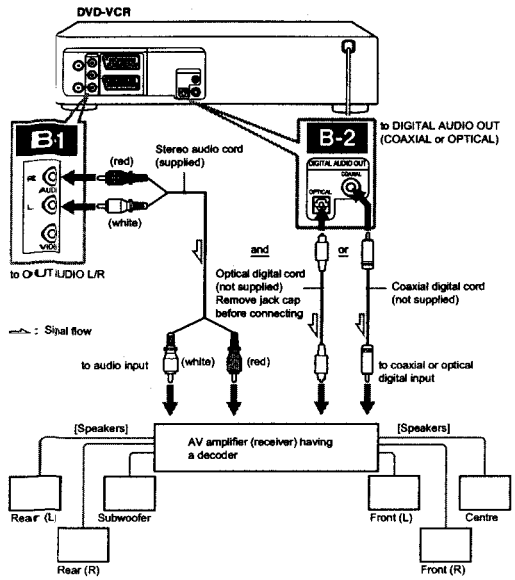

Note

• After you have completed the connection, be sure to set "Dolby Digital" to "Dolby Digital" and "DTS" to "Oui" in "OPTIONS AUDIO" menu (page 62). If your AV amplifier (receiver) has an MPEG audio decoder function, set "MPEG" to "MPEG" in "OPTIONS AUDIO" menu (page 62). Otherwise, no sound or a loud noise will come from the speakers.

S-Video hookup DVD VCD DATA CD

Make audio connections using the OUT AUDIO L/R jacks or DIGITAL AUDIO OUT (OPTICAL or COAXIAL) jacks when you use S-VIDEO hookup.

Use this hookup if your TV has an S VIDEO input jack

• Connect an S VIDEO cord (not supplied). You will enjoy high quality images.

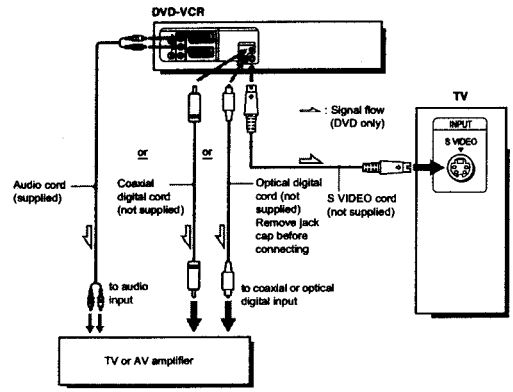

Notes

• Set "DVD S-Video Out" to "Oui" in the "REGLAGE DE L'ECLAN" menu (page 65) to view pictures from the S-VIDEO jack.

• The connection using S-VIDEO OUT jack is only for the DVD player.

DVD Settings and Adjustments

Audio Setup DVD

"Options Audio" allows you to set the sound according to the playback and connection condition.

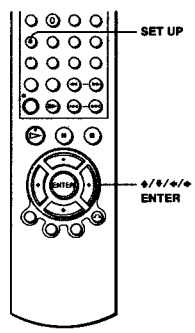

1 SET UP

Press SET UP when the DVD player is in stop mode, then press ↑/↓ to select (DVD) and press ENTER.

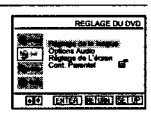

2

Press ↑/↓ to select "Options Audio", then press ENTER.

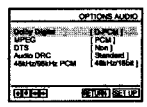

3

Press ↑/↓ to select the setup item from the displayed list: "Dolby Digital", "MPEG", "DTS", "Audio DRC", or "48kHz/96kHz PCM".

4

Press ↑/↓ to select an item.

5 SET UP

Press SET UP to exit the menu.

Menu choices

• Dolby Digital

Selects the type of Dolby Digital signal.
The default setting is indicated in bold print.

D-PCM	Select this when the player is connected to an audio component lacking a built-in Dolby Digital decoder.
Dolby Digital	Select this when the player is connected to an audio component with a built-in Dolby Digital decoder.

• MPEG

Selects the type of MPEG audio signal.
The default setting is indicated in bold print.

PCM	Select this when the player is connected to an audio component lacking a built-in MPEG decoder. If you play MPEG audio sound tracks, the player outputs stereo signals via the DIGITAL AUDIO OUT (OPTICAL or COAXIAL) jack.
MPEG	Select this when the player is connected to an audio component with a built-in MPEG decoder.

• DTS

Selects whether or not to output DTS signals.
The default setting is indicated in bold print.

Non	Select this when the player is connected to an audio component lacking a built-in DTS decoder.
Oui	Select this when the player is connected to an audio component with a built-in DTS decoder.

continued

• Audio DRC (Dynamic Range Control)

Makes the sound clear when the volume is turned down when playing a DVD that conforms to "Audio DRC". This affects the output from the following jacks:
– OUT AUDIO L/R jacks
– DIGITAL AUDIO OUT (OPTICAL or COAXIAL) jack only when "Dolby Digital" is set to "D-PCM".

The default setting is indicated in bold print.

Standard	Normally select this position.
TV	Makes the low sounds clear even if you turn the volume down.

• 48kHz/96kHz PCM

Selects the sampling frequency of the audio signal.
The default setting is indicated in bold print.

48kHz/16bit	The audio signals of DVD VIDEOs are always converted to 48 kHz/16 bit.
96kHz/24bit	All types of signals including 96 kHz/24 bit are output in their original format. However, if the signal is encrypted for copyright protection purposes, the signal is only output as 48 kHz/16 bit.

Notes

- If you select the surround setting while playing a DVD, the player does not output the following signals from the DIGITAL AUDIO OUT (OPTICAL or COAXIAL) jack.
  – Dolby Digital signals (when you set "Dolby Digial" to "D-PCM" in "OPTIONS AUDIO" menu)
  – MPEG audio signals
- If you connect a component that does not conform to the selected audio signal, a loud noise (or no sound) will come out from the speakers, affecting your ears or causing the speakers to be damaged.
- Even if you set "48kHz/96kHz PCM" to "96kHz/24bit", the sampling frequency is converted to 48 kHz/16 bit when a "SURROUND" mode (page 83) is selected.
- The analog audio signals from AUDIO OUT L/R jacks are not affected by "48kHz/96kHz PCM" setting and keep their original sampling frequency level.

Screen Setup DVD

"Réglage de L'écran" allows you to set the screen according to the playback and connection conditions.

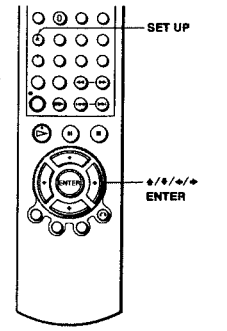

1 SET UP

Press SET UP when the DVD player is in stop mode, then press ↑/↓ to select (DVD) and press ENTER.

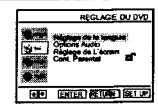

2

Press ↑/↓ to select "Réglage de L'écran", then press ENTER.

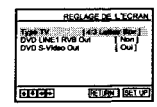

3

Press ↑/↓ to select the setup item from the displayed list: "Type TV", "DVD LINE1 RVB Out" or "DVD S-Video Out".

continued

4

Press ←/→ to select an item.

5 SET UP

Press SET UP to exit the menu.

Menu choices

• Type TV

Selects the aspect ratio of the connected TV (4:3 standard or wide).
The default setting is indicated in bold print.

4:3 Letter Box	Select this when you connect a 4:3 screen TV. Displays a wide picture with bands on the upper and lower portions of the screen.
4:3 Pan Scan	Select this when you connect a 4:3 screen TV. Automatically displays the wide picture on the entire screen and cuts off the portions that do not fit.
16:9	Select this when you connect a wide-screen TV or a TV with a wide mode function.

4:3 Letter Box

4:3 Pan Scan

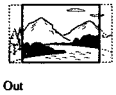

16:9

• DVD LINE1 RVB Out

Selects the method of outputting video signals from the LINE-1 (EURO AV) jack on the rear panel of the player.
The default setting is indicated in bold print.

Non	Select this to not output RGB signals.
Oui	Select this to output RGB signals.

• DVD S-Video Out

Selects whether or not to output S video signals from the S-VIDEO OUT jack on the rear panel of the player.
The default setting is indicated in bold print.

Oui	Select this when the player is connected to a TV with S VIDEO input jack.
Non	Select this when the player is connected to a TV lacking S VIDEO input jack.

Notes

- Playback settings stored in the disc take priority over the "REGLAGE DU DVD" menu settings and not all the functions described may work.
- Depending on the DVD, "4:3 Letter Box" may be selected automatically instead of "4:3 Pan Scan" or vice versa.
- The connection using S-VIDEO OUT jack is only for the DVD player.
- When you select "Oui" in the "DVD LINE1 RVB Out" setting, "DVD S-Video Out" is set to "Non" automatically.
- When you select "Oui" in the "DVD S-Video Out" setting, "DVD LINE1 RVB Out" is set to "Non" automatically.

Setting the display or sound track language DVD

You can set various languages for the disc's menu, sound track or subtitle.

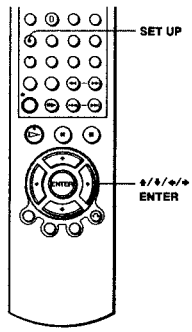

1 SET UP

Press SET UP when the DVD player is in stop mode, then press ↑/↓ to select (DVD) and press ENTER.

2

Press ↑/↓ to select "Réglage de la langue", then press ENTER.

The "REGLAGE DE LA LANGUE" menu appears.

3

Press ↑/↓ to select the language setup item from the displayed list: "Menu DVD", "Audio", or "Sous-Titre". Then press ENTER.

4

Press ↑/↓ to select the desired language, then press ENTER.

- LANGUE DE MENU DVD
  You can select the desired language for the disc's menu.

- LANGUE DE LA BANDE SON
  Switches the language of the sound track. When you select "Originale", the language given priority in the disc is selected.

- LANGUE DES SOUS-TITRES
  Switches the language of the subtitle recorded on the DVD.

5 SET UP

Press SET UP to exit the menu.

Tip

- If you select "Autre" in step 4, an additional language menu appears. Press ↑/↓/←/→ to select the desired language, then press ENTER.

Notes

- When you select a language that is not recorded on the DVD in step 4, one of the recorded languages will be automatically selected.
- Playback settings stored in the disc take priority over the REGLAGE DU DVD settings and not all the functions described may work.
- If you change the LANGUE DE MENU DVD setting after playing the disc, press ⏏ to open and close the disc tray to activate the new setting, then play the disc again.

Parental Control (limiting playback by children)

DVD

Playback of some DVDs can be limited according to a predetermined level such as the age of the users. The parental control function allows you to set a playback limitation level.

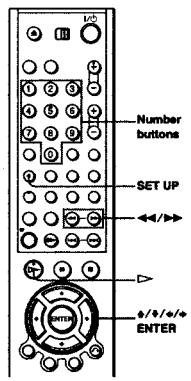

1 SET UP

Press SET UP when the DVD player is in stop mode, then press ↑/↓ to select (DVD) and press ENTER.

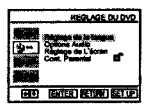

2

Press ↑/↓ to select "Cont. Parental", then press ENTER.

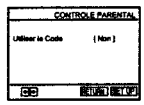

3

Press → to select "Oui".

- If you have not entered a password
  The display for registering a new password appears.
  Enter a 4-digit password using the number buttons.

  The display for confirming the password appears.
  Re-enter the password.

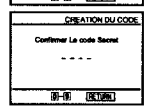

- When you have already registered a password
  The display for entering the password appears.
  Enter a 4-digit password using the number buttons.

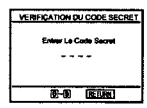

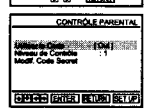

4

Press ↑/↓ to select "Niveau de Contrôle", then press ENTER.

5

Press ↑/↓ to select the level you want, then press ENTER.

The options are as follows.

Level 8 (Adulte) ⟷ Level 7 ⟷ Level 6 ⟷ Level 5 ⟷ Level 4 ⟷ Level 3 ⟷ Level 2 ⟷ Level 1 (Tout Public)

The lower the value, the stricter the limitation.

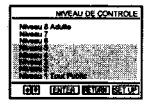

6 SET UP

Press SET UP to exit the menu.

continued

To change the password

1 Select "Modif. Code Secret" in step 4 on page 71.
The display for entering a new password appears.
2 Enter a new 4-digit password using the number buttons.
The display for confirming the password appears.
3 Re-enter the new password.

To turn off the Parental Control function

Set "Utiliser le Code" to "Non" in step 3 on page 71.

To play a disc for which Parental Control is set

1 Insert the disc, then press ▷.
The display for entering your password appears.
2 Enter your 4-digit password using the number buttons.
The player starts playback.

If you forget your password

1 Remove the disc and turn off the DVD-VCR.
2 Turn on the DVD-VCR again with no disc in the unit.
3 Hold down ◀◀ and ▶▶ on the front panel simultaneously for 5 seconds.
"Reset OK" appears on the screen.
4 Turn off the DVD-VCR.
The password is cleared.
5 To create a new password, follow step 3 on page 71.

Notes

- When you play DVDs which do not have the Parental Control function, playback cannot be limited on this player.
- All the ratings higher than the level you select will be blocked.
- Write your password down and keep it in a safe place in case you forget it.

3 ENTER Press ENTER.

To turn off the DVD's menu

Press ■.

Note

- Depending on the DVD, you may not be able to use the TOP MENU button.

Using the DVD's menu DVD

A DVD is divided into long sections of a picture or a music feature called "titles". When you play a DVD which contains several titles, you can select the title you want using the TOP MENU button.

When you play DVDs that allow you to select items such as the language for the subtitles and the language for the sound, select these items using the MENU button.

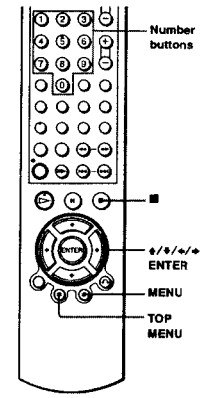

1 TOP MENU / MENU
Press TOP MENU or MENU.
The disc's menu appears on the TV screen.
The contents of the menu vary from disc to disc.

2 ENTER / number buttons
Press ↑/↓/←/→ to select the item you want to play or change.
You can also use the number buttons to select the item.

continued

Zooming into a scene DVD VCD DATA-CD

You can zoom into a scene during playback or still mode.
To zoom into a JPEG image, see "Playing JPEG image files" on page 89.

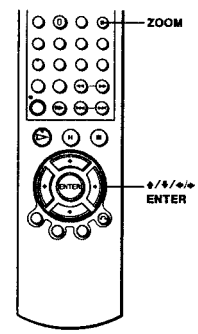

1 MUTING/ZOOM
Press ZOOM.
"▣" appears.

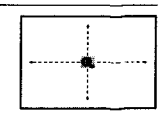

2 ENTER
Press ↑/↓/←/→ to move "▣" to the position where you want to zoom in.

3 ENTER
Press ENTER repeatedly to change the magnification.
Each time you press the button, the magnification changes as shown below.
2× → 4× → 2× → normal magnification

Notes

- You cannot use 4× magnification when you play VIDEO CDs.
- The zoom function may not work depending on the DVD.

Notes

- Surround effects cannot be obtained for DTS or linear PCM.
- When the playing signal does not contain a signal for the rear speakers, the surround effects will be difficult to hear.
- When you activate the surround effect, turn off the surround setting of the connected TV or amplifier (receiver).
- Make sure that your listening position is between and at an equal distance from your speakers, and that the speakers are located in similar surroundings.
- If you use the DIGITAL AUDIO OUT (OPTICAL or COAXIAL) jack and set "Dolby Digital" to "Dolby Digital" or "DTS" to "Oui" in "OPTIONS AUDIO" menu, sound will come from your speakers but it will not have the surround effect.
- Certain audio features of this product manufactured under a license from Desper Products, Inc. Spatializer®, VBX™ and the circle-in-square device are trademarks owned by Desper Products, Inc.

Playing an MP3 audio track DATA-CD

You can play back DATA CDs (CD-ROMs/CD-Rs/CD-RWs) recorded in MP3 (MPEG1 Audio Layer 3) format.

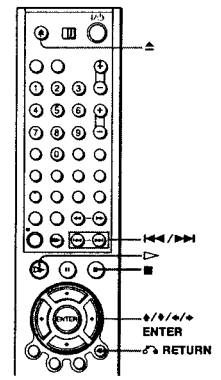

1 Press ⏏ and place a DATA CD on the disc tray, then press ⏏ to close the tray.

When you load a DATA CD which contains MP3 audio tracks and JPEG image files, "Sélectionnez le type de media" menu appears.

If you load a DATA CD which contains only MP3 audio files, the MP3 display appears. Then you can skip step 2.

2 Press ↑/↓ to select "MP3", then press ENTER.

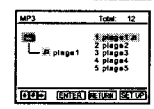

continued

3 Press ↑/↓ then press ENTER, or press ⏮/⏭ to select the desired track.

The selected track starts playing.

When a track or album is being played, its title is shaded. The playing track number appears on the display window.

4 RETURN

To change the album, press ↩ RETURN.

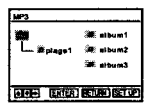

5 Press ↑/↓ to select an album, then press ENTER.

The list of tracks contained in the album appears.

To select a track, repeat step 2.

To go to the next or previous page

Press → or ←.

To return to the previous display

Press ↩ RETURN.

To turn off the display

Press ■, then press ↩ RETURN repeatedly.

Notes

- Only the letters in the alphabet and numbers can be used for album or track names. Anything else is displayed as an asterisk.
- Up to 8 alphanumeric characters can be displayed for album or track names.
- ID3 tags cannot be displayed.

About MP3 audio tracks

You can play MP3 audio tracks on CD-ROMs, CD-Rs, or CD-RWs. However, the discs must be recorded according to ISO9660 level 1, level 2, or Joliet format for the player to recognize the tracks.
You can also play discs recorded in Multi Session.
See the instructions of the CD-R/RW device or recording software (not supplied) for details on the recording format.

To play a Multi Session CD

This player can play Multi Session CDs when an MP3 audio track is located in the first session. Any subsequent MP3 audio tracks, recorded in the later sessions, can also be played back. When audio tracks and images in music CD format or video CD format are recorded in the first session, only the first session will be played back.

Notes

- If you put the extension ".MP3" to data not in MP3 format, the player cannot recognize the data properly and will generate a loud noise which could damage your speaker system.
- The player cannot play audio tracks in MP3PRO format.
- This player supports MP3 audio tracks recorded with a bit rate of 128 kbps and a sampling frequency of 44.1 kHz. Attempting to play MP3 audio tracks recorded with different specifications may result in loud noise, sound skipping or speaker damage.
- Depending on the disc, playback may take some time to start.

The Playback order of MP3 audio tracks

The playback order of albums and tracks recorded on a DATA CD is as follows.

- Structure of disc contents

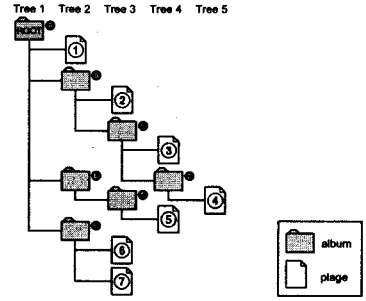

When you insert a DATA CD and press ▷, the numbered tracks are played sequentially, from ① through ⑦. Any sub-albums/tracks contained within a currently selected album take priority over the next album in the same tree. (Example: ❻ contains ❼ so ❹ is played before ❺.)

When you press ↩ RETURN and the list of MP3 albums appears (page 86), the albums are arranged in the following order: ❶ → ❻ → ❷ → ❸ → ❹ → ❺ → ❼. Albums that do not contain tracks (such as album ❽) do not appear in the list.

continued

Tips

- If you add numbers (01, 02, 03, etc.) to the front of the track file names, the tracks will be played in that order.
- A disc with many trees takes longer to start playback. Some discs with many trees cannot be played back.

Notes

- Depending on the software you use to create the DATA CD, the playback order may differ from the illustration above.
- The playback order above may not be applicable if there are more than a total of 200 albums and tracks in the DATA CD.
- The player can recognize up to 100 albums (the player will count just albums, including albums that do not contain MP3 audio tracks). The player will not play any albums beyond the first 100 albums. Of the first 100 albums, the player will play no more than a combined total of 200 albums and tracks.

3 Press ⏮/⏭ to select the next/previous album page, then press ↑/↓/←/→ to select an image in the "Album" display.

To display the selected image

1 Press ENTER.
The selected image number appears in the display window.
2 To display the next/previous image, press ⏮/⏭.

To play the Slide show

1 Press ▷.
You can also play the Slide show using the menu on the selected image.
For details, see "To enjoy the Slide show" on page 91.
2 Press ←/→ to select the desired playing speed on the "Intervalle" menu, then press ENTER.
Slide show starts from the selected image.

To rotate an image

1 Press ↑/↓/←/→ to select an image in the "Album" display, then press ENTER.
2 Press ←/→ to select "↻", then press ENTER.
Each time you press ENTER, the image turns clockwise by 90°.

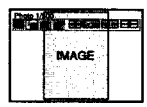

To zoom in an image

1 Press ↑/↓/←/→ to select an image in the "Album" display, then press ENTER.
2 Press ←/→ to select "■", then press ENTER.
"■" appears.
3 Press ↑/↓/←/→ to move "■" to the position where you want to zoom in.
4 Press ENTER repeatedly to change the magnification. Each time you press ENTER, the magnification changes as shown below.
2× → normal magnification

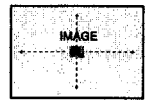

Playing JPEG image files DATA-CD

You can play JPEG image files on DATA CDs (CD-ROMs/CD-Rs/CD-RWs).

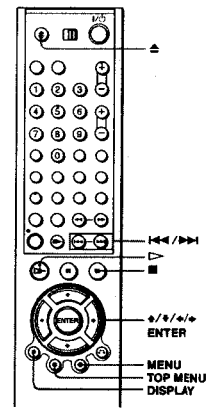

1 Press ⏏ and place a DATA CD on the disc tray, then press ⏏ to close the tray.

When you load a DATA CD which contains MP3 audio tracks and JPEG image files, "Sélectionnez le type de media" menu appears.

If you load a DATA CD which contains only JPEG image files, the "Album" display appears. Then you can skip step 2.

2 Press ↑/↓ to select "JPEG", then press ENTER.

The "Album" display will appears.

If you do not press ENTER after selecting a media type, the selected media will be automatically played.

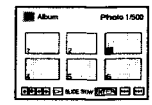

continued

To enjoy the Slide show

1 Press ↑/↓/←/→ to select an image in the "Album" display, then press ENTER.
2 Press ←/→ to select "⏱", then press ENTER.
The "Intervalle" menu appears.
3 Press ←/→ to select the desired playing speed, then press ENTER.
Slide show starts.

To turn on/off the menu in the single image display

Press DISPLAY in the single image display.

To return to the "Album" display

Press DISPLAY to turn on the menu and press ←/→ to select "▦", then press ENTER. You can also use MENU button to return to the "Album" display. Press ⏮ repeatedly to return to the first "Album" page.

To return to the "Sélectionnez le type de media" menu

Press ■ twice, then press TOP MENU.

Notes

- Slide show can play in only one direction.
- You cannot rotate or zoom in the image during Slide show.
- If you select "▦" in the rotated image display, the images in the "Album" display will also be rotated. Correct the rotation in the single image display.

About JPEG image files

You can play JPEG image files on CD-ROMs, CD-Rs, or CD-RWs. However, the discs must be recorded according to ISO9660 level 1, level 2, or Joliet format for the player to recognize the files.
You can also play discs recorded in Multi Session.
See the instructions of the CD-R/RW device or recording software (not supplied) for details on the recording format.

To play a Multi Session CD

This player can play Multi Session CDs when an JPEG image file is located in the first session. Any subsequent JPEG image files, recorded in the later sessions, can also be played back. When audio tracks and images in music CD format or video CD format are recorded in the first session, only the first session will be played back.

continued

Tip

- If you add numbers (01, 02, 03, etc.) to the front of the file names, the files will be played in that order.

Notes

- The system can play the extension ".JPG" or ".JPEG".
- Some CD-Rs or CD-RWs cannot be played on this system depending on file format.
- If you add the extension ".JPG" or ".JPEG" to data not in JPEG format, the display will be blank.
- Depending on the disc or the size of image files, playback may take some time to start.

3 Press ENTER.

4 Follow the instructions in the menu for interactive operations.

Refer to the instructions supplied with the disc, as the operating procedure may differ depending on the VIDEO CD.

To return to the menu

Press ↩ RETURN.

To play using "MENU NON"

Press MENU to select "MENU NON".
When "MENU NON" is selected, the DVD player starts continuous play. You cannot play still pictures such as a menu.
To return to "MENU OUI", press MENU to select "MENU OUI".

Tip

- Depending on the VIDEO CD, "Press ENTER" in step 3 may appear as "Press SELECT" in the instructions supplied with the disc. In this case, press ▷.

Playing VIDEO CDs with "MENU OUI/NON" functions VCD

The PBC (Playback control) function allows you to search and perform other operations interactively. PBC playback follows a selection menu displayed on your TV screen.

The "MENU OUI" function is the PBC function.

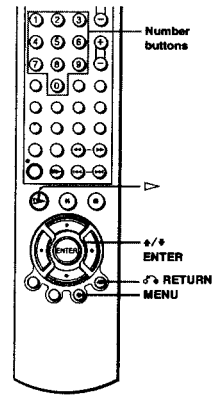

1 Start playing a VIDEO CD with "MENU OUI".

The menu for your selection appears.

2 Press +/+ to select the item number you want.

You can also use the number buttons to select the item number and track.

continued

VCR Additional Operations

Playing a tape with SQPB function VHS

The SQPB (Super VHS Quasi Playback) function is only for playing a Super VHS format tape.

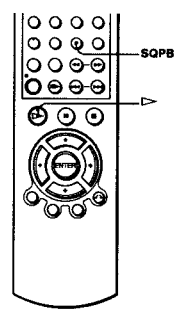

1 Insert a Super VHS format tape.

2 Press ▷.

3 ANGLE/SQPB Press SQPB to start SQPB.

Notes

- You cannot use the SQPB function for recording.
- The playback display will be distorted if you use the SQPB function with a normal VHS format tape.
- When you eject the tape, the VCR automatically returns to normal mode.
- Playback of tapes recorded in EP (Extended Play) mode on an NTSC system is not guaranteed.

Quick Timer Recording VHS

After you have started recording, you can have the VCR stop recording automatically after a specified duration.

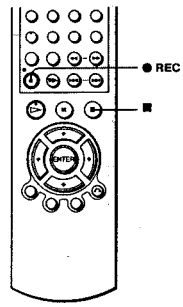

1 ●REC While recording, press ● REC.

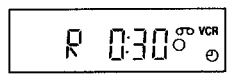

2 ●REC Press ● REC repeatedly to set the duration time.

In SP mode

Each press advances the time in increments of 30 minutes.

0:30 → 1:00 ----→ 4:00 → 4:30 → **Normal recording**

In LP mode

Each press advances the time as shown below.

0:30 → 1:00 ----→ 8:00 → 9:00 → **Normal recording**

The tape counter decreases minute by minute to 0:00, then the VCR stops recording.

To extend the duration

Press ● REC repeatedly to set a new duration time.

To cancel the duration

Press ● REC repeatedly until the ⏲ indicator disappears and the VCR returns to normal recording mode.

To stop while recording

Press ■.

Note

- You cannot display the current tape time in the display window when setting the recording duration time.

Recording stereo and bilingual programmes VHS

In the ZWEITON (German stereo) system

This VCR automatically receives and records stereo and bilingual programmes based on the ZWEITON system. When a stereo or bilingual programme is received, the STEREO indicator appears in the display window.

To select bilingual sound while recording

Press AUDIO to select the sound you want.

To listen to	On-screen display	Display window
Main	PRINCIPALE	STEREO
Sub	SECONDAIRE	STEREO
Main and sub	PRINCIP/SEC.	STEREO
Standard sound*	MONO	STEREO

* Usually the main channel heard from both the left and right in bilingual programmes

To select stereo programme while recording

To listen to	On-screen display	Display window
Stereo	STEREO	STEREO
Left channel	CANAL G	STEREO
Right channel	CANAL D	STEREO
Standard sound*	CANAL G + CANAL D	STEREO

* Usually the mixed sound of left and right channels in stereo programmes

In the NICAM system

This VCR receives and records stereo and bilingual programmes based on the NICAM system (NICAM appears on the TV screen). When a stereo or bilingual programme is received, the STEREO indicator appears in the display window.

To record a NICAM programme, "NICAM" in the "REGLAGES UTILISATEUR" menu should be set to "Oui" (initial setting). To check the menu setting, see page 110 for details.

To select the sound while recording

Press AUDIO to select the sound you want.

Stereo programmes

To listen to	On-screen display	Display window
Stereo	NICAM, STEREO	STEREO
Left channel	NICAM, CANAL G	STEREO
Right channel	NICAM, CANAL D	STEREO
Left and right channels*	NICAM, CANAL G + CANAL D	STEREO

* Usually the mixed sound of left and right channels

Bilingual programmes

To listen to	On-screen display	Display window
Main	NICAM, PRINCIPALE	STEREO
Sub	NICAM, SECONDAIRE	STEREO
Main and sub	NICAM, PRINCIP./SEC.	STEREO
Standard sound*	NICAM, MONO	STEREO

* Usually the main sound (monaural)

Selecting the sound during Hi-fi playback

Press AUDIO to select the sound you want.

To listen to	On-screen display	Display window
Stereo	STEREO	STEREO
Left channel	CANAL G	STEREO
Right channel	CANAL D	STEREO
Mix sound*	MIX	STEREO
Mono sound	MONO	No indicator

* The mixed sound of left and right channels, and the normal mono audio track

continued

How sound is recorded on a video tape

The VCR records sound onto two separate tracks. Hi-fi audio is recorded onto the main track along with the picture. Monaural sound is recorded onto the normal audio track along the edge of the tape.

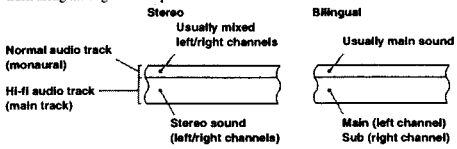

Notes

- To listen to playback sounds in stereo, you must use the PERITEL or AUDIO OUT connections.
- When you play a tape recorded in monaural, the sound is heard in monaural regardless of the AUDIO setting.

Searching using index function VHS

The VCR automatically marks the tape with an index signal at the point where each recording begins. Use these signals as references to find a specific recording.

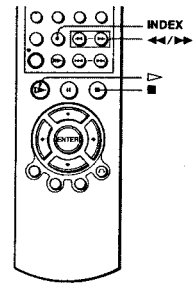

To find a specific recording by scanning (Index scan)

1 Insert an indexed tape into the tape compartment.

2 INDEX ○, ◀◀ ○, ▶▶ ○

Press INDEX, then press ◀◀/▶▶. The VCR starts scanning each recording for five seconds in the corresponding direction.

3 ▷ ○

Press ▷ to start playback when you find the desired point.

continued

To search a specific recording (Index search)

1 Insert an indexed tape into the VCR.

2 INDEX ○, ◀◀ ○, ▶▶ ○

Press INDEX, then press ◀◀/▶▶ twice.

- To search ahead, press ▶▶ twice.
- To search backwards, press ◀◀ twice.

3 ◀◀ ○, ▶▶ ○

Press ◀◀/▶▶ depending on the direction where your desired programme is located.

Each time you press the button, the number increases or decreases up to ±20, respectively.

4 The VCR starts searching, and playback starts automatically from that point.

To stop searching

Press ■.

Note

- No index signal will be added when recording starts from recording pause. However, an index signal will be marked if you change the programme position during recording pause.

Adjusting the picture (tracking) VHS

Adjusting the tracking

Although the VCR automatically adjusts the tracking when playing a tape, distortion may occur if the recording is in poor condition. In this case, manually adjust the tracking.

During playback, press TRACKING +/– to display the tracking meter. The distortion should disappear as you press one of the two buttons. To resume automatic tracking adjustments, eject the tape and re-insert it.

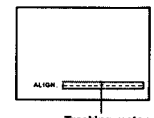

Adjusting the picture sharpness (Smart trilogic)

You can automatically adjust the sharpness of the picture.

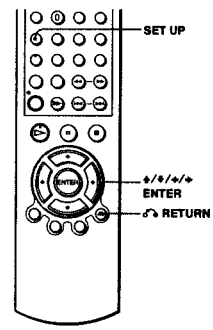

1 SET UP ○, ENTER ○

During playback, press SET UP, then press ↑/↓ to select ■ (OPTION) and press ENTER.

continued

2 Press ↑/↓ to select "Réglages Utilisateur", then press ENTER.

3 Press ↑/↓ to select "Smart Trilogic", then press →.

4 Press ↑/↓ to set "SMART TRILOGIC" to "OUI" or "NON".

- OUI: Picture sharpness is automatically adjusted.
- NON: Adjust the picture sharpness manually.

To soften the picture, press ←.

To sharpen the picture, press →.

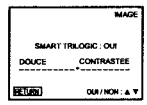

5 Press ↩ RETURN to return to the original screen.

RETURN

Changing menu options VHS

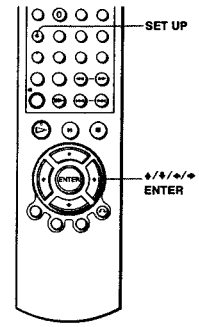

1 SET UP

Press SET UP when the DVD player is in stop mode, then press ↑/↓ to select ■ (OPTION) or ■ (VIDEO) and press ENTER.

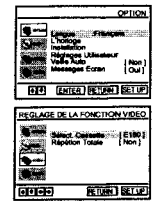

2 Press ↑/↓ to select the option to change.

VCR Additional Operations

continued

3 Press →/← to change the setting.

4 SET UP Press SET UP to exit the menu.

Menu choices

The default settings are indicated in bold print.

OPTION

Menu option	Set this option to
Veille Auto	• **"Non"** to deactivate the Auto Power Off function. • "1Heures"/"2Heures"/"3Heures" to turn the DVD-VCR off automatically if no signal is received and you do not press any of the buttons during this time.
Messages Ecran	• **"Oui"** to display the menu on the TV screen. • **"Non"** to disappear the menu from the TV screen.

VIDEO SETUP

Menu option	Set this option to
Sélect. Cassette	• **"E180"** to use an E-180 or shorter type tape. • "E240" to use an E-240 type tape. • "E260" to use an E-260 type tape. • "E300" to use an E-300 type tape.
Répétion Totale	• "Oui" to play back a tape repeatedly. The VCR rewinds a tape to the beginning and restarts playback automatically. • **"Non"** to turn off Auto repeat.

Editing VHS

How to connect to record on this VCR

Connect the line outputs of the other VCR to the input connector of this VCR. Refer to the examples A through C and choose the connection that best suits your VCR.

Example A

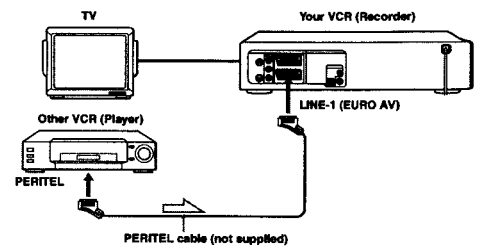

Example B

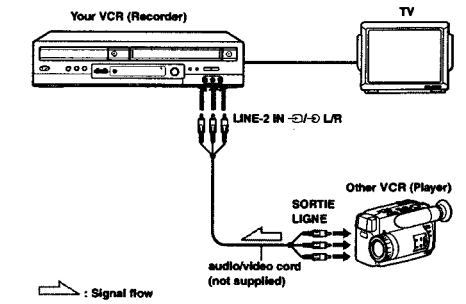

VCR Additional Operations

continued

Example C

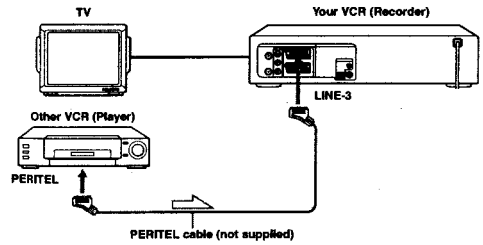

How to connect to a stereo system

Connect the LINE-2 IN -Ⓛ/-Ⓡ L/R jacks on this DVD-VCR to the audio output jacks on the stereo system, using an audio cable (not supplied).

Notes

- Make sure you connect the plugs to jacks of the same colour.
- If the other VCR is a monaural type, leave the red plugs unconnected.
- If you connect this VCR to both the LINE IN and LINE OUT jacks of the other VCR, select the input correctly to prevent a humming noise.
- When you connect another VCR to the LINE-3 or LINE-2 connector, press INPUT SELECT to display "L3" or "L2" in the display window.

Operation (when recording on this VCR)

Before you start editing

- Turn on your TV and set it to the video channel.
- Press INPUT SELECT to display the connected line in the display window.
- Press SP/LP to select the tape speed, SP or LP.
- Press SELECT VIDEO to control the VCR.

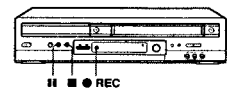

1 Insert a source tape with its safety tab removed into the other (playback) VCR. Search for the point to start playback and set it to playback pause.

2 (II) Insert a tape with its safety tab in place into this (recording) VCR. Search for the point to start recording and press II to set it to playback pause.

3 ●REC Press ● REC on this VCR to set it to recording pause.

4 (II) To start editing, press the II (pause) buttons on both VCRs at the same time.

To stop editing

Press the ■ (stop) buttons on both VCRs.

Tip

- To cut out unwanted scenes while editing, press II on this VCR when an unwanted scene begins. When it ends, press II again to resume recording.

Additional Information

General setup information

Changing setup options

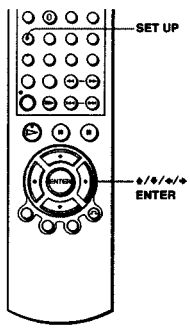

1 SET UP Press SET UP when the DVD player is in stop mode, then press ↑/↓ to select ■ (OPTION) and press ENTER.

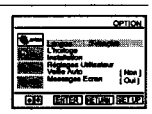

2 Press ↑/↓ to select "Réglages Utilisateur", then press ENTER.

The "REGLAGES UTILISATEUR" menu appears.

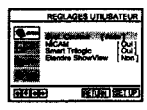

3 Press ↑/↓ to select the option to change.

4 Press ←/→ to change the setting.

5 SET UP Press SET UP to exit the menu.

Menu choices

Initial settings are indicated in bold print.

Menu option	Set this option to
Syst. Couleur	• **"Auto"** to select the colour system automatically. • "PAL" to use the tape recorded in the PAL colour system. • "SECAM" to use the tape recorded in the SECAM colour system. • "MESECAM" to use the tape recorded in the MESECAM colour system. • "B/W" to use the tape recorded in black and white. When using the tape recorded NTSC colour signals: • **"NTPB"** to play back an NTSC-recorded tape on PAL TV. • "NT4.43" to play back an NTSC-recorded tape on Multi TV.
NICAM	• **"Oui"** to record NICAM broadcasts on the hi-fi audio track. • "Non" to record standard sound on the hi-fi audio track. For details, see page 98.
Smart Trilogic	• **"Oui"** to automatically adjust the sharpness of the picture. • "Non" to manually adjust the sharpness of the picture.
Etendre ShowView	• **"Non"** to deactivate the ShowView Extend function. • 10/20/30/.../60 (minutes) to extend the time of the ShowView setting by the selected amount of time.

Troubleshooting

If you have any questions or problems not covered below, please consult your nearest Sony service facility.

General Troubleshooting

	Symptom	Remedy
Power	The I/⏻ (on/standby) switch does not function.	• Connect the mains lead to the mains securely.
	The power is turned on but the DVD-VCR does not operate.	• Moisture condensation has occurred. Turn the power off, unplug the mains lead and leave the DVD-VCR to dry for over three hours.
Clock	The clock has stopped and "--:--" appears in the display window.	• The clock stops if the DVD-VCR is disconnected from the mains. Reset the clock (and timer).
Others	The remote commander does not function.	• Make sure you are pointing the remote commander at the remote sensor on the DVD-VCR. • Replace all the batteries in the remote commander with new ones if they are weak. • Make sure the TV / DVD-VIDEO switch is set correctly. • Select correctly VIDEO or DVD with the SELECT DVD/VIDEO button.
	The tracking meter does not appear on the screen.	• The recording condition of the tape is very poor and tracking cannot be adjusted.
	You cannot control other TVs.	• Set your TV's code number. The code number may change when you replace the batteries of the remote commander.

DVD Troubleshooting

	Symptom	Remedy
Picture	There is no picture/picture noise appears.	• Re-connect the connecting cord securely. • The connecting cords are damaged. • Check the connection to your TV (page 11) and switch the input selector on your TV so that the signal from the player appears on the TV screen. • The disc is dirty or flawed. • If the picture output from your player goes through your VCR to get to your TV or if you are connected to a combination TV/VIDEO player, the copy-protection signal applied to some DVD programmes could affect picture quality. If you still experience problems even when you connect your player directly to your TV, please try connecting your player to your TV's S VIDEO input (page 61).

	Symptom	Remedy
Picture	Even though you set the aspect ratio in "Type TV" of the "REGLAGE DE L'ECLAN" menu the picture does not fill the screen.	• The aspect ratio of the disc is fixed on your DVD.
	There is no picture from your VCR connected to the LINE IN jacks.	• The DVD player must be in standby mode to view pictures from your VCR.
Sound	There is no sound.	• Re-connect the connecting cord securely. • The connecting cord is damaged. • The player is connected to the wrong input jack on the amplifier (receiver) (page 59). • The amplifier (receiver) input is not correctly set. • The player is in pause mode or in Slow-motion Play mode. • The player is in fast forward or fast reverse mode. • If the audio signal does not come through the DIGITAL AUDIO OUT (OPTICAL or COAXIAL) jack, check the audio settings (page 62).
	Sound is noisy.	• When playing a CD with DTS sound tracks, noise will come from the OUT AUDIO L/R jacks (page 33) or DIGITAL OUT (OPTICAL or COAXIAL) jack.
	The sound volume is low.	• The sound volume is low on some DVDs. The sound volume may improve if you set "Audio DRC" to "TV" (page 64).
Operation	The disc does not play.	• The disc is turned over. • Insert the disc with the playback side facing down on the disc tray. • The disc is skewed. • The player cannot play certain discs (page 6). • The region code on the DVD does not match the player. • Moisture has condensed inside the player. • The player cannot play CD-Rs, CD-RWs, DVD-Rs or DVD-RWs that are not finalized (page 7). • Make sure the TV / DVD-VIDEO switch is set correctly. • Select correctly VIDEO or DVD with SELECT DVD/VIDEO button.
	The MP3 audio track cannot be played (page 85).	• The DATA CD is not recorded in the MP3 format that conforms to ISO9660 Level 1/Level 2 or Joliet. • The MP3 audio track does not have the extension ".MP3". • The data is not formatted in MP3 even though it has the extension ".MP3". • The data is not MPEG1 Audio Layer 3 data. • The player cannot play audio tracks in MP3PRO format.
	The JPEG image file cannot be played.	• The DATA CD is not recorded in JPEG format that conforms to ISO9660 Level 1/Level 2 or Joliet. • The JPEG image file does not have the extension ".JPG" or ".JPEG". • The data is not formatted in JPEG even though it has the extension ".JPG" or ".JPEG". • Length or width of the image is more than 4721 dots.

continued

	Symptom	Remedy
Operation	The title of the MP3 audio album or track is not correctly displayed.	• The player can only display numbers and alphabet. Other characters are displayed as asterisks.
	The disc does not start playing from the beginning.	• Programme play, shuffle play, or repeat play, has been selected (pages 78, 80, 81). • Resume play has taken effect (page 32).
	The player starts playing the disc automatically.	• The disc features an auto playback function.
	Playback stops automatically.	• While playing discs with an auto pause signal, the player stops playback at the auto pause signal.
	You cannot perform some functions such as stop, search, slow-motion play, repeat play, shuffle play, or programme play.	• Depending on the disc, you may not be able to do some operations. See the operating manual that comes with the disc.
	The language for the sound track cannot be changed.	• Try using the DVD's menu instead of the direct selection button on the remote (page 73). • Multilingual tracks are not recorded on the DVD being played. • The DVD prohibits the changing of the language for the sound track.
	The subtitle language cannot be changed or turned off.	• Try using the DVD's menu instead of the direct selection button on the remote (page 73). • Multilingual subtitles are not recorded on the DVD being played. • The DVD prohibits the changing of the subtitles.
	The angles cannot be changed.	• Try using the DVD's menu instead of the direct selection button on the remote (page 73). • Multi-angles are not recorded on the DVD being played. • The DVD prohibits changing of the angles.
	The player does not operate properly.	• When static electricity, etc., causes the player to operate abnormally, unplug the player.

VCR Troubleshooting

	Symptom	Remedy
Playback	The playback picture does not appear on the TV screen.	• Make sure the TV is set to the channel for the VCR. If you are using a monitor, set it to video input. • If the VCR is connected to the TV with the PEITEL cable, make sure the VCR indicator is lit in the display window. Use the TV/VIDEO button on the remote commander to light up the VCR indicator.
	The picture is not clear.	• Adjust the tracking with the TRACKING +/– buttons. • The video heads are dirty (see the last page of Troubleshooting). Clean the video heads using a Sony video head cleaning cassette. If a Sony cleaning cassette is not available in your area, have the heads cleaned at your nearest Sony service facility (a standard service charge will be required). Do not use a commercially available liquid type cleaning cassette other than Sony's, as it may damage the video heads. • The video heads may have to be replaced. Consult your local Sony service facility for more information.
	The picture has no colour	• The "Syst. Couleur" option in the "REGLAGE UTILISATEUR" menu is set to the wrong position. Set the option to conform to the system that the tape was recorded in.
	The picture rolls vertically during picture search.	• Adjust the vertical hold control on the TV or monitor.
	The picture has no sound.	• The tape is defective. • If you made A/V connections, check the audio cord connection.
	The sound from a tape recorded with the VCR is not in stereo or the STEREO indicator in the display window is flashing.	• Adjust the tracking. • The video heads are dirty. Clean the video heads using a Sony video head cleaning cassette as explained above.
Recording	No TV programme appears on the TV screen.	• Make sure the TV is set to the video channel. If you are using a monitor, set it to video input. • Select the correct source with the INPUT SELECT button. Select a programme position when recording TV programmes; select a line input when recording from another equipment.
	TV reception is poor.	• Make sure the aerial cable is connected securely. • Adjust the TV aerial. • Make sure "SYS. (L/L' or B/G)" in the "REGLAGE MANUELLE" menu is set to the same system as your local area.
	The tape starts playing as soon as it is inserted.	• The safety tab has been removed. To record on this tape, cover the tab hole.
	The tape is ejected when you press ● REC.	• The safety tab has been removed. To record on this tape, cover the tab hole.
	Nothing happens when you press ● REC.	• Make sure the tape is not at its end.

continued

	Symptom	Remedy
Timer recording	The timer does not operate.	• Check that the clock is set. • Make sure a tape has been inserted. • Check that the safety tab has not been removed. • Make sure the tape is not at its end. • Make sure a programme has been set for timer recording. • Make sure your timer settings are past the current time. • Check that the decoder is turned on. • Check that the satellite tuner is turned on. • The clock stops if the DVD-VCR is disconnected from the mains for more than one minute. Reset the clock and timer. • Turn the power off and unplug the mains lead.
	The VPS/PDC function does not operate properly.	• Check that the clock and the date are set correctly. • Check that the VPS/PDC time you set is the correct one (there might be a mistake in the TV programme guide). If the broadcast you wanted to record did not send the good VPS/PDC information, the VCR will not start recording. • If the reception is poor, the VPS/PDC signal might be altered and the VCR might not start recording.
Canal Plus	You cannot watch Canal Plus programmes when the VCR is in standby mode.	• Check that "DEC" is set to "OUI" for this channel in the "LISTE STATIONS TV" menu. • Make sure the Canal Plus PERITEL cable is plugged securely.
	A Canal Plus programme is always recorded scrambled.	• Make sure the Canal Plus PERITEL cable is plugged securely. • Check that "DEC" is set to "OUI" for this channel in the "LISTE STATIONS TV" menu.
Others	A tape cannot be inserted.	• Check that a tape is not already in the tape compartment.
	The selected input line connector number does not appear in the display window.	• Press INPUT SELECT to display the connected line.
	The VCR mechanism needs to be cleaned.	• Clean the cabinet, panel and controls with a dry, soft cloth, or a soft cloth slightly moistened with a mild detergent solution. Do not use any type of solvent, such as alcohol or benzine.

Symptoms caused by contaminated video heads

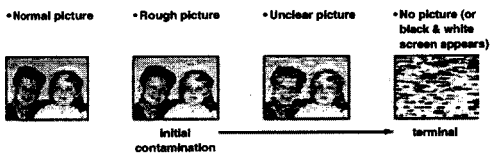

Title (page 35)

The longest section of a picture or music feature on a DVD, movie, etc., in video software, or the entire album in audio software.

Track (page 35)

Sections of a picture or a music feature on a CD or VIDEO CD (the length of a song).

Glossary

Chapter (page 35)

Sections of a picture or a music feature that are smaller than titles. A title is composed of several chapters. Depending on the disc, no chapters may be recorded.

Dolby Digital (pages 60 and 63)

Digital audio compression technology developed by Dolby Laboratories. This technology conforms to 5.1-channel surround sound. The rear channel is stereo and there is a discrete subwoofer channel in this format. Dolby Digital provides the same 5.1 discrete channels of high quality digital audio found in Dolby Digital cinema audio systems. Good channel separation is realized because all of the channel data are recorded discretely and little deterioration is realized because all channel data processing is digital.

Dolby Surround (Pro Logic) (page 59)

Audio signal processing technology that Dolby Laboratories developed for surround sound. When the input signal contains a surround component, the Pro Logic process outputs the front, centre and rear signals. The rear channel is monaural.

DTS (page 63)

Digital audio compression technology that Digital Theater Systems, Inc. developed. This technology conforms to 5.1-channel surround sound. The rear channel is stereo and there is a discrete subwoofer channel in this format. DTS provides the same 5.1 discrete channels of high quality digital audio.
Good channel separation is realized because all of the channel data is recorded discretely and little deterioration is realized because all channel data processing is digital.

DVD (page 6)

A disc that contains up to 8 hours of moving pictures even though its diameter is the same as a CD.

The data capacity of a single-layer and single-sided DVD is 4.7 GB (Giga Byte), which is 7 times that of a CD. The data capacity of a double-layer and single-sided DVD is 8.5 GB, a single-layer and double-sided DVD is 9.4 GB, and double-layer and double-sided DVD is 17 GB.
The picture data uses the MPEG 2 format, one of the worldwide standards of digital compression technology. The picture data is compressed to about 1/40 (average) of its original size. The DVD also uses a variable rate coding technology that changes the data to be allocated according to the status of the picture. Audio information is recorded in a multi-channel format, such as Dolby Digital, allowing you to enjoy a more real audio presence.
Furthermore, various advanced functions such as the multi-angle, multilingual, and Parental Control functions are provided with the DVD.

DVD-RW (page 6)

A DVD-RW is a recordable and rewritable disc that is the same size as a DVD VIDEO. The DVD-RW has two different modes: VR mode and Video mode. DVD-RWs created in Video mode have the same format as a DVD VIDEO, while discs created in VR (Video Recording) mode allow the contents to be programmed or edited.

DVD+RW (page 6)

A DVD+RW (plus RW) is a recordable and rewritable disc. DVD+RWs use a recording format that is comparable to the DVD VIDEO format.

continued

Index to parts and controls

Refer to the pages indicated in parentheses ( ) for details.

Front panel

SLV-D950B

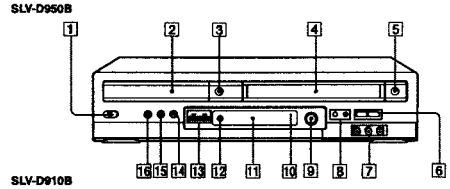

SLV-D910B

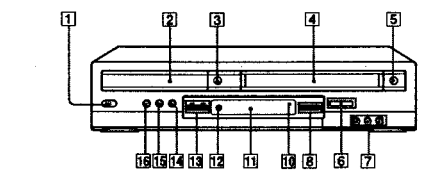

1 I/⏻ (on/standby) switch (10) (38)
2 Disc tray (31)
3 ⏏ (open/close) button (31) (32)
4 Tape compartment (37)
5 ⏏ (eject) button (38)
6 SELECT DVD/VIDEO (9)
7 LINE-2 IN -⊃/-⊂ L/R jacks*1 (107)
8 PROGRAM +/– buttons*2 (41)
9 ◴ DIAL TIMER*3 (52)
10 ■ Remote sensor (9)
11 Display window (32) (37)
12 ● REC (record) button (41)
13 ◀◀ (rewind)/▶▶ (fast-forward) buttons (33) (38)
14 ■ (stop) button (32) (38)
15 ▮▮ (pause) button (32) (38)
16 ▷ (play) button (32) (37)

*1 Covered
*2 PROGRAM + button has a tactile dot. Use the tactile dot as a reference when operating the DVD-VCR.
*3 SLV-D950B only

continued

Display window

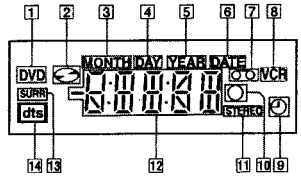

1 DVD indicator (32)
2 Disc indicator (32)
3 MONTH indicator* (52)
4 DAY indicator* (52)
5 YEAR indicator* (52)
6 DATE indicator* (52)
7 Tape indicator (37)
8 VCR indicator (37)
9 Timer indicator (46)
10 Recording indicator (41)
11 STEREO indicator (98)
12 Playing time/clock/current status indicator (32)
13 SURR (surround) indicator (83)
14 DTS indicator (63)

* SLV-D950B only

Rear panel

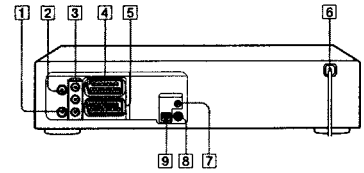

DVD player and VCR

1 (out to tv) connector (11)
2 (in from antenna) connector (11)
3 OUT VIDEO/AUDIO L/R jacks (11) (59)
4 LINE-3 connector (12)
5 LINE-1 (EURO AV) connector (11)

DVD player only

6 Mains lead (11)
7 DIGITAL AUDIO OUT jack (COAXIAL) (60)
8 S-VIDEO OUT jack (61)
9 DIGITAL AUDIO OUT jack (OPTICAL) (60)

continued

Remote commander for DVD

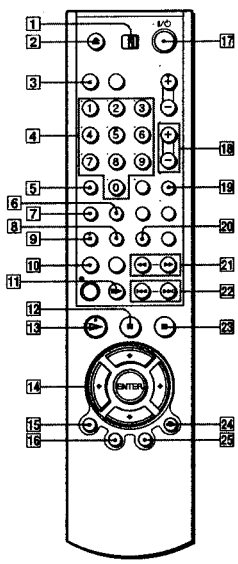

1 TV / DVD•VIDEO switch (9)
2 ⏏ (open/close) button (31) (32)
3 SELECT DVD button (9)
4 Number buttons* (10) (71)
5 CLEAR button (79)
6 SURROUND button (83)
7 SET UP button (14)
8 SUBTITLE button (77)
9 AUDIO button* (82)
10 REPEAT/PROGRAM button (78) (81)
11 ⏭ STEP button (32)
12 ⏸ (pause) button (32)
13 ▷ (play) button* (32)
14 ↑/↓/←/→ buttons
ENTER button (14)
15 DISPLAY button (35) (41)
16 TOP MENU button (73)
17 I/⏻ (on/standby) switch (10)
18 VOL (volume) +/– buttons (10)
19 ZOOM button (75)
20 ANGLE button (76)
21 ⏪/⏩ SCAN/SLOW ⏩ buttons (32)
22 ⏮/⏭ PREV/NEXT buttons (32)
23 ■ (stop) button (32)
24 ↩ RETURN button (20)
25 MENU button (73)

* Number 5, AUDIO and ▷ buttons have a tactile dot. Use the tactile dot as a reference when operating the DVD-VCR.

Remote commander for VCR

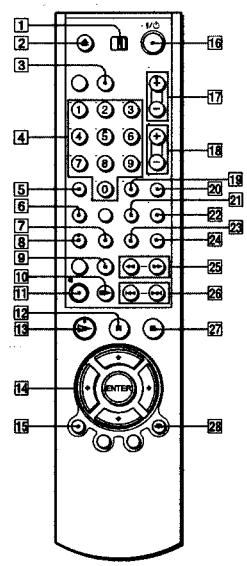

1 TV / DVD•VIDEO switch (9)
2 ⏏ (eject) button (38)
3 SELECT VIDEO button (9)
4 Number buttons* (10)
5 CLEAR button (24)
6 SET UP button (14)
7 TIMER button (49)
8 AUDIO button* (98)
9 INDEX button (101)
10 ⏭ STEP button (38)
11 ● REC (record) button (41)
12 ⏸ (pause) button (38)
13 ▷ (play) button* (37)
14 ↑/↓/←/→ buttons
ENTER button (14)
15 DISPLAY button (41)
16 I/⏻ (on/standby) switch (10) (68)
17 PROG (programme)/TRACKING +/– buttons* (39) (41)
18 VOL (volume) +/– buttons (10)
19 -/-- (ten's digit) button (10)
20 MUTING button (10)
21 SP (Standard Play)/LP (Long Play) button (41)
22 TV/VIDEO button (42)
23 SQPB button (95)
24 INPUT SELECT button (41)
25 ⏪ (rewind)/⏩ (fast-forward) buttons SLOW ⏩ button (38)
26 ⏮/⏭ SHUTTLE buttons (38)
27 ■ (stop) button (38)
28 ↩ RETURN button (20)

* Number 5, AUDIO, ▷ and PROG/TRACKING + buttons have a tactile dot. Use the tactile dot as a reference when operating the DVD-VCR.

DVD Audio/Subtitle Language

Abbreviation	Language
ARA	Arabic
CHI	Chinese
CRO	Croatian
CZK	Czech
DAN	Danish
DEU	German
ENG	English
ESP	Spanish
FIN	Finish
FRA	French
GRE	Greek
HUN	Hungarian
IDN	Indonesian
IND	Hindi
ISL	Icelandic
ITA	Italian
IWR	Hebrew
JPN	Japanese
KOR	Korean
MAL	Malay
NLD	Dutch
NOR	Norwegian
POL	Polish
POR	Portuguese
RUS	Russian
SVE	Swedish
THA	Thai
TUR	Turquish
VIE	Vietnamese
ZAF	Afrikaans

Index

Numerics

16:9 66
4:3 Letter Box 66
4:3 Pan Scan 66

A

Adjusting
  picture 103
  tracking 103
Aerial hookup 11
Angle 76
Audio track 100
Auto Clock Set 13
Auto Set Up 13

C

Canal Plus 27
Changing the programme position 21
Changing the station name 25
Clock setting 16
Colour system
  setting 39
Commercial Skip 38
Connecting
  the DVD-VCR and your TV 11
  to video equipment 107
Counter 39

D

DATA CD 6, 85, 89
Demonstration Mode 55
Dial Timer 52
Disabling the programme positions 23
DOLBY DIGITAL 59, 82
DTS 60, 82
DVD 6

E

Editing 107

H

Handling discs 7
Hi-fi audio track 100

I

Index scan 101

J

JPEG 6, 89

L

Language selecting 15
LP mode 41

M

Manual fine tuning 20
Monaural 99
Monitoring
  during playback 99
  during recording 98
MP3 6, 85

N

NICAM broadcasts 98
Normal audio track 100

P

Parental Control 70
PBC (Playback control) 93
PDC (Programme Delivery Control) 46
Picture adjustment 103
Playback 31, 37
  at various speeds 33, 38
  frame by frame 32, 38
  JPEG image files 89
  MP3 audio track 85
  programme play 78
  repeat play 81
  selecting the sound 98, 99
  shuffle play 80
  skip 38
  slow motion 33, 38
  VIDEO CDs 93
Presetting channels 18
Programme play 78

R

Recording 40
  quick timer recording 96
  saving 42
  using DIAL TIMER 52
  using the ShowView system 44
  while watching another programme 42, 47, 51
Repeat play 81
Rotation 90

S

Safety tab 42
Searching
  at various speeds 33, 38
ShowView
  recording 44
Shuffle play 80
Slide show 91
Smart trilogic 103
SP mode 41
STEREO 82, 98
Subtitle 77

T

Timer setting
  daily/weekly recording 46, 50
  quick timer recording 96
  using DIAL TIMER 52
  using the ShowView system 44
Tracking adjustment. *see* Adjusting

U

Usable discs 6

V

VIDEO CD 6
VPS (Video Programme System) 46

Z

Zoom 75, 90
ZWEITON broadcasts 98

2. DISASSEMBLY AND REASSEMBLY

2-1 CABINET AND PCB

2-1-1 Cabinet Top Removal

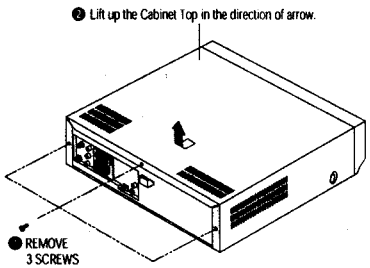

Fig. 2-1 Cabinet Top Removal

2-1-2 Bottom Cover Removal

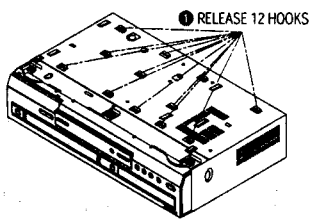

<SLV-D910>

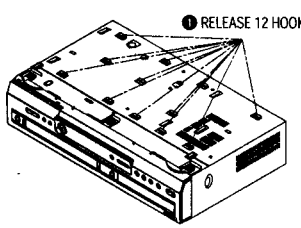

<SLV-D950>

Fig. 2-2 Bottom Cover Removal

2-1-3 Ass'y Front Panel Removal

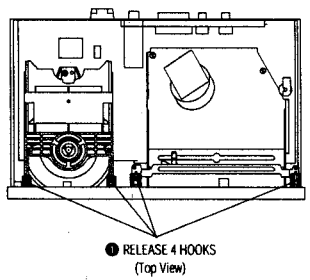

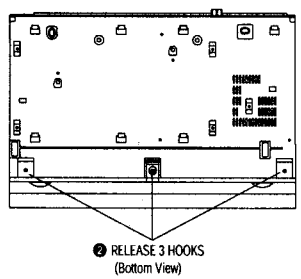

Fig. 2-3 Ass'y Front Panel Removal

2-1-4 Function PCB Removal

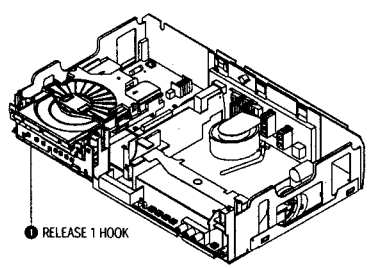

Fig. 2-4 Function PCB Removal

2-1-5 Chassis Removal

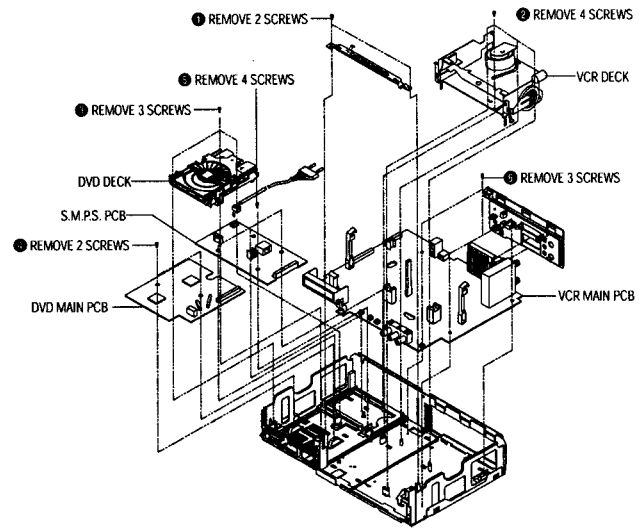

Fig. 2-5 Chassis Removal

2-1-6 VCR Main PCB Removal

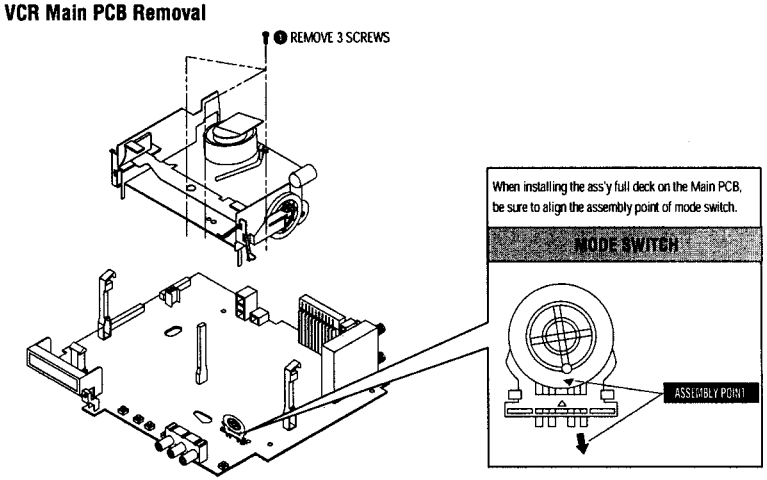

Fig. 2-6 VCR Main PCB Removal

2-2 CIRCUIT BOARD LOCATIONS

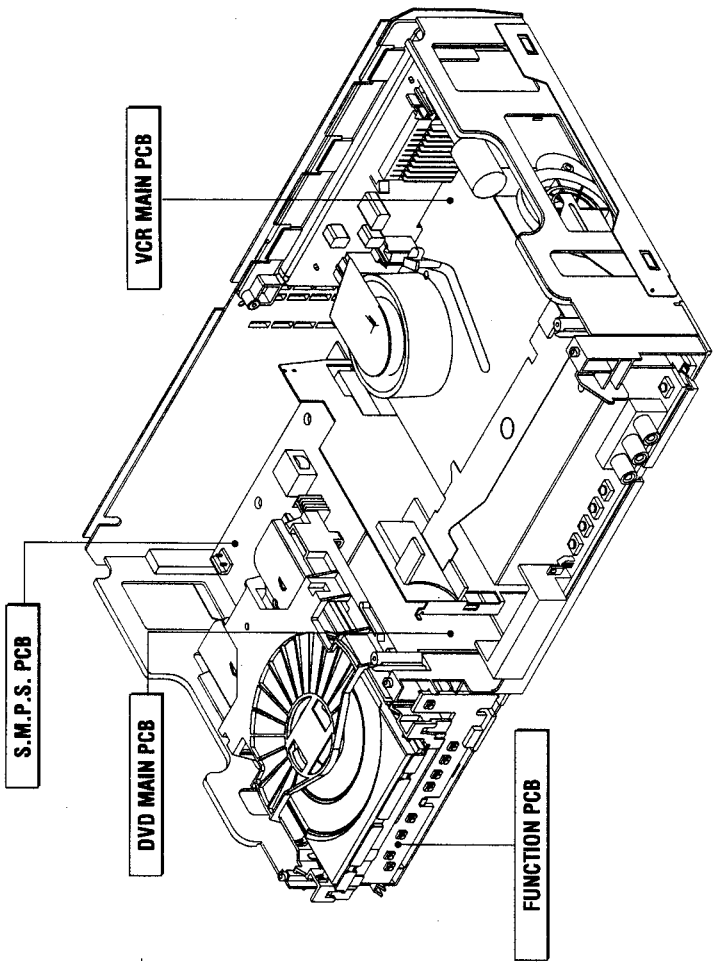

Fig. 2-7 Circuit Board Locations

2-3 VCR DECK PARTS LOCATIONS

2-3-1 Top View

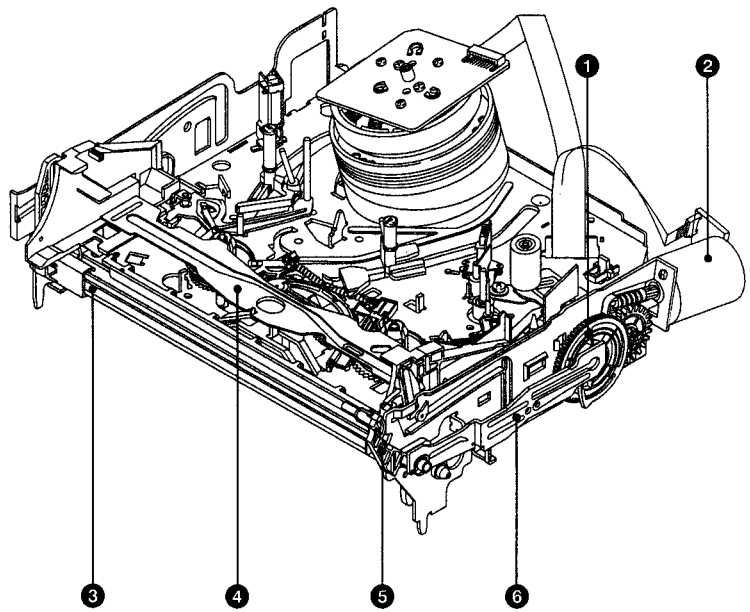

Fig. 2-8 Top parts Location-1

1. GEAR FL CAM
2. MOTOR LOADING ASS'Y
3. LEVER FL ARM ASS'Y
4. HOLDER FL CASSETTE ASS'Y
5. LEVER FL DOOR
6. SLIDER DRIVE

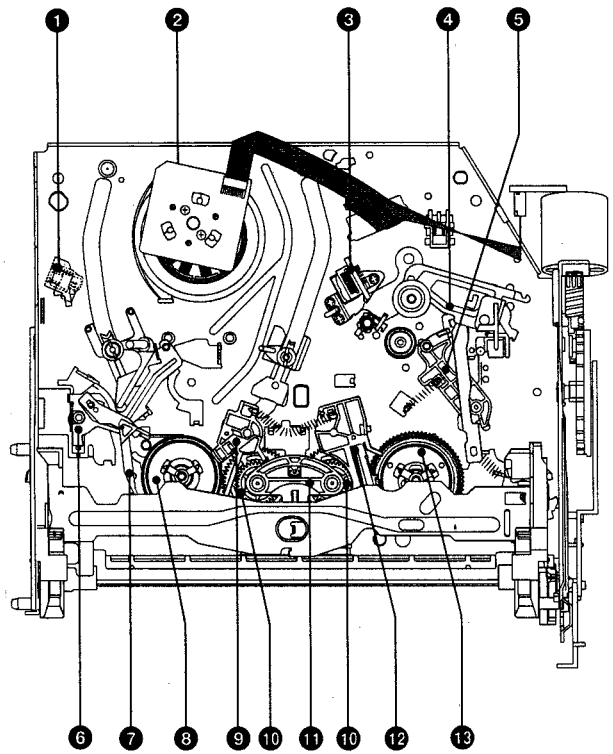

Fig. 2-9 Top Parts Location-2

1. FE HEAD
2. CYLINDER ASS'Y
3. ACE HEAD ASS'Y
4. LEVER UNIT PINCH ASS'Y
5. LEVER #9 GUIDE ASS'Y
6. LEVER TENSION ASS'Y
7. BAND BRAKE ASS'Y
8. DISK S REEL
9. LEVER S BRAKE ASS'Y
10. GEAR IDLE
11. LEVER IDLE
12. LEVER T BRAKE ASS'Y
13. DISK T REEL

2-3-2 Bottom View

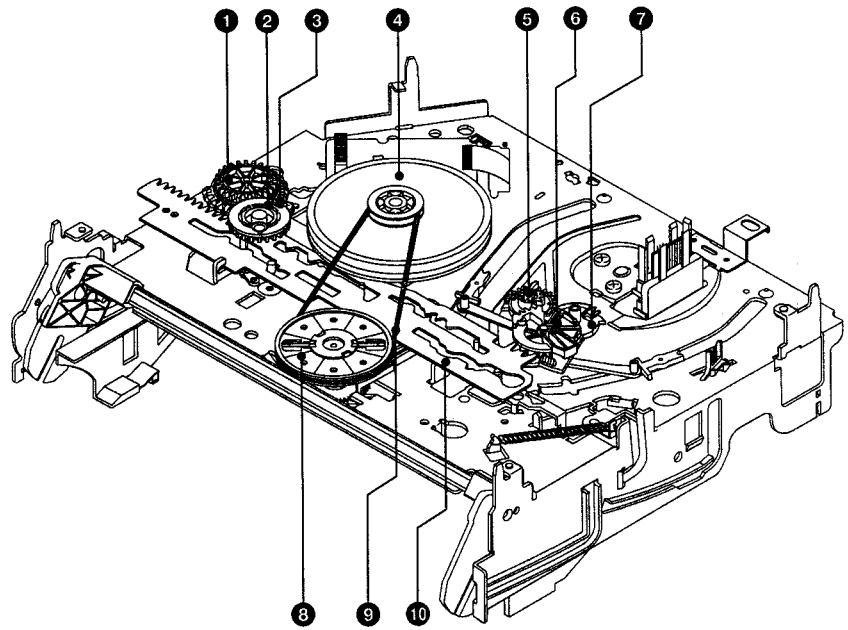

Fig. 2-10 Bottom Parts Location

1. GEAR JOINT 1
2. GEAR JOINT 2
3. BRAKET GEAR
4. MOTOR CAPSTAN ASS'Y
5. LEVER T LOAD ASS'Y
6. GEAR LOADING DRIVE
7. LEVER S LOAD ASS'Y
8. HOLDER CLUTCH ASS'Y
9. BELT PULLEY
10. SLIDER CAM

2-4 VCR DECK

2-4-1 Holder FL Cassette Ass'y Removal

1) Pull the Holder FL Cassette Ass'y ❶ to the eject position.
2) Pull the Holder FL Cassette Ass'y ❶ as grasping the Holder FL Cassette Ass'y ❷ and Lever FL Cassette-R ❸ in the same time to release hooking from Main Base until the Boss [A] of Holder FL Cassette Ass'y ❶ is taken out from the Rail [B].
3) Lift the Holder FL Cassette Ass'y ❶, in this time, you have to grasp the Lever FL Cassette-R ❷ Continuously until the Holder FL Cassette Ass'y ❶ is taken out completely.

Note: Be sure to insert Lever FL Cassette-R ❷ in the direction of "A" to prevent separation and breakage of the Lever FL Cassette-R ❷ at disassembling and reassembling.

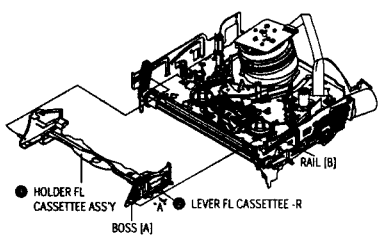

Fig. 2-11 Holder FL Cassette Ass'y Removal

2-4-2 Lever FL Door Removal

1) Release the Hook ❷ and Remove the Lever FL Door ❶ in the direction of arrow "A".

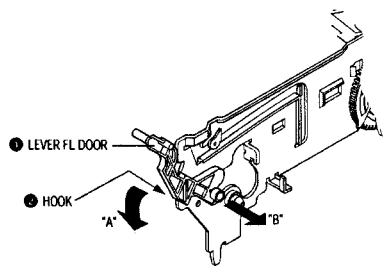

Fig. 2-12 Lever FL Door Removal

2-4-3 Slider FL Drive, Gear FL Cam Removal

1) Pull the Slider FL Drive ❶ to the front direction.
2) Remove the Slider FL Drive ❶ in the direction of arrow. (Refer to Fig. 2-13)
3) Remove the Gear FL cam ❷.

Note: When reinstalling be sure to reassemble Slider FL drive ❶ after you insert the Boss of Lever FL ARM-R in Groove of Slider FL drive ❶.

Assembly: Align the Gear FL Cam ❶ with the Gear worm wheel Post as shown drawing.
(Refer to Timing point)

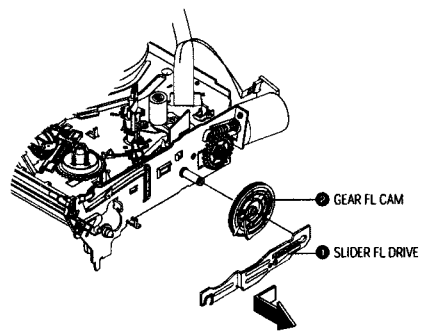

Fig. 2-13 Slider FL Drive Removal

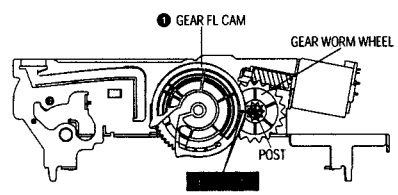

Fig. 2-14 Gear FL Cam, Gear Worm

2-4-4 Lever FL Arm Ass'y Removal

1) Push the hole "A" in the direction of arrow "B" use the pin.(about Dia. 2.5)
2) Pull out the Lever FL Arm Ass'y ❶ from the Boss of Main Base.
3) Remove the Lever FL Arm Ass'y ❶ in the direction of arrow "C".

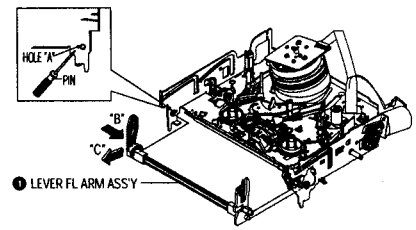

Fig. 2-15 Lever FL Arm Ass'y Removal

2-4-5 Gear Worm Wheel Removal

1) Remove the Gear Worm wheel ❶.

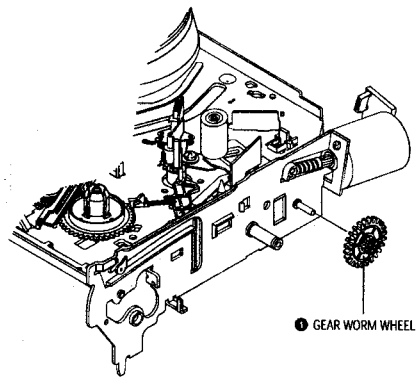

Fig. 2-16 Gear Worm Wheel Removal

2-4-6 Cable Flat Removal

1) Remove the Drum connecting part of Cable Flat ❶ from Connector Waffer ❷.
2) Remove the Loading Motor connecting part of Cable Flat ❶ from Connector Waffer ❸.

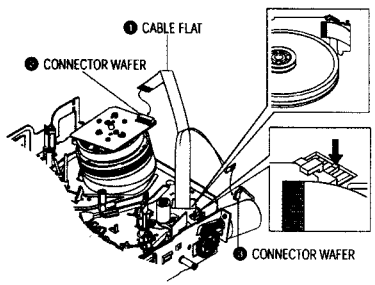

Fig. 2-17 Cable Flat Removal

2-4-7 Motor Loading Ass'y Removal

1) Remove the screw ❶.
2) Remove the Motor Loading Ass'y ❷.

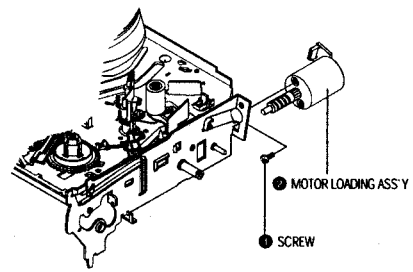

Fig.2-18 Motor Loading Ass'y Removal

2-4-8 Bracket Gear, Gear Joint 2, 1 Removal

1) Remove the SCREW ❶.
2) Remove the Bracket Gear ❷.
3) Remove the Gear Joint 2 ❸.
4) Remove the Gear Joint 1 ❹.

Assembly:

1) Be sure to align dot mark of Gear Joint 1 ❶ with dot mark of Gear Joint 2 ❷ as shown Fig 2-20.
(Refer to Timing point1)
2) Confirm the Timing Point 2 of the Gear Joint 2 ❷ and Slider Cam ❸.

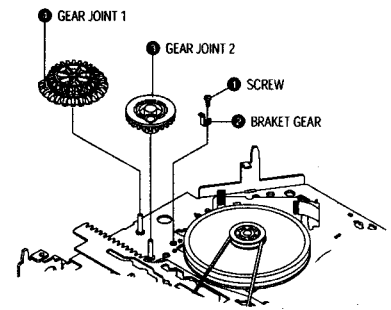

Fig. 2-19 Bracket Gear, Gear Joint 1,2 Removal

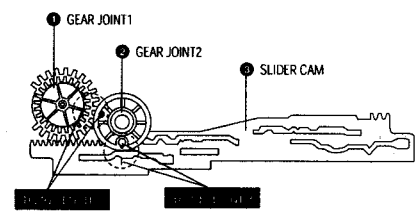

Fig. 2-20 Gear Joint 1,2 Assembly

2-4-9 Gear Loading Drive, Slider Cam, Lever Load S, T Ass'y Removal

1) Remove the Belt Pulley. (Refer to Fig. 2-38)
2) Remove the Gear Loading Drive ❶ after releasing Hook [A] in the direction arrow as shown in detail drawing.
3) Remove the Slider Cam ❸.
4) Remove the Lever Load ❹, Link Load ❺ & Lever Load ❼, Link Load ❽.

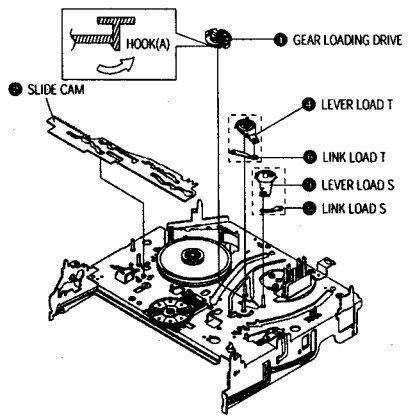

Fig. 2-21 Gear Loading Drive, Slider Cam, Lever T, S Load Ass'y Removal

2-4-10 Gear Loading Drive, Slider Cam, Lever Load S, T Ass'y Assembly

1) When reinstalling, be sure to align dot of Lever Load T Ass'y ❶ with dot of Lever Load S Ass'y ❷ as shown in drawing, (Refer to Timing Point 1).
2) Insert the Pin A,B,C,D into the Slider Cam ❸ hole,
3) Be sure to align dot of Lever Load T ❶ and dot of Gear Loading Drive ❺, (Refer to Timing Point 2).
4) Aline dot of Gear Loading drive ❹ with mark of Slider Cam ❸ as shown in drawing (Refer to Timing Point 3).

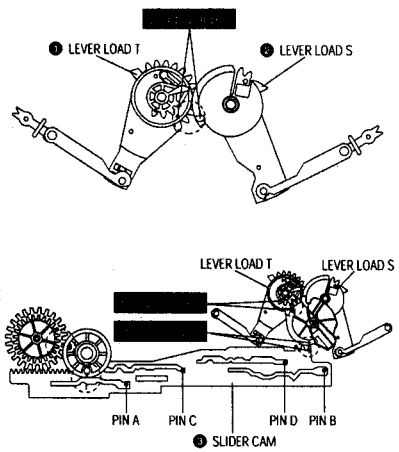

Fig. 2-22 Gear Loading Drive, Slider Cam, Lever Load S, T Ass'y Assembly

2-4-11 Lever Pinch Drive, Lever Tension Drive Removal

1) Remove the Lever Pinch Drive ❶, Lever Tension Drive ❷.

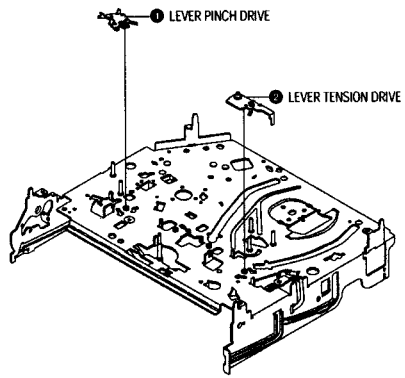

Fig. 2-23 Lever Pinch Drive, Lever Tension Drive Removal

2-4-12 Lever Tension Ass'y, Band Brake Ass'y Removal

1) Remove the Lever Brake S Ass'y (Refer to Fig 2-25).
2) Remove the Spring Tension Lever ❶.
3) Rotate stopper of Main Base in the direction of arrow "A".
4) Lift the Lever Tension Ass'y ❷ & Band brake Ass'y ❸.

Note:
1) When replacing the Lever Tension Ass'y ❷, be sure to apply Grease on the post,
2) Take care not to touch stain on the felt side, and not to be folder and broken Band brake Ass'y
3) After Lever Tension Ass'y seated, Rotate stopper of Main Base to the Mark[B].

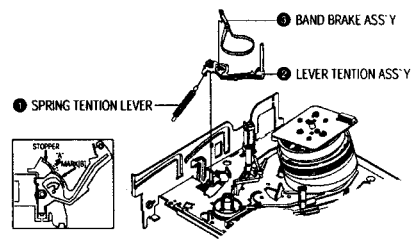

Fig. 2-24 Lever Tension Ass'y, Band Brake Ass'y Removal

2-4-13 Lever Brake S, T Ass'y Removal

1) Release the Hook [A] and the Hook [B], [C] in the direction of arrow as shown in Fig 2-25.
2) Lift the Lever S, T Brake Ass'y ❶, ❷ with spring brake ❸.

Assembly:
1) Assembly the Lever S Brake Ass'y ❶ on the Main Base.
2) Assembly the Lever T Brake Ass'y ❷ with spring brake ❸.

Note: Take extreme care not to be folded and transformed Spring Brake at removing or reinstalling.

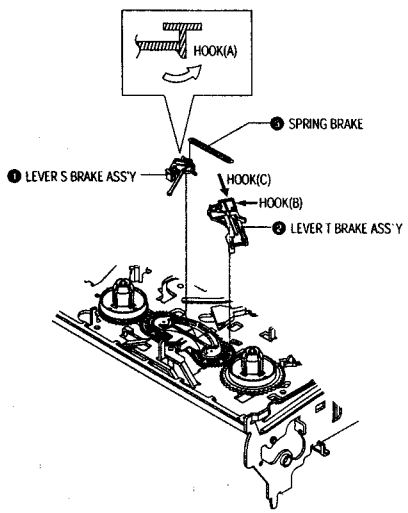

Fig. 2-25 Lever Brake S, T Ass'y Removal

2-4-14 Gear Idle Ass'y Removal

1) Push the Lever Idle ❶ in the direction of arrow "A", "B".
2) Lift the Lever Idle ❶.

Assembly:
1) Apply oil in two Bosses of Lever Idle ❶.
2) Assemble the Gear Idle ❷ with the Lever Idle ❶.

Note: When replacing the Gear Idle ❷, be sure to add oil in the boss of Lever Idle ❶.

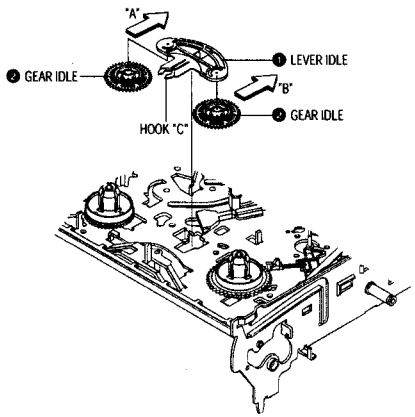

Fig. 2-26 Gear Idle Ass'y Removal

2-4-15 Disk S, T Reel Removal

1) Lift the Disk S, T Reel ❶, ❷.

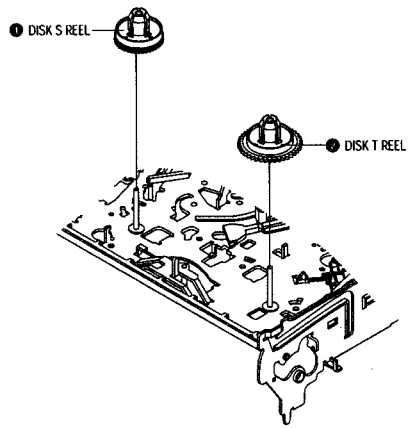

Fig. 2-27 Disk S, T Reel Removal

2-4-16 Holder Clutch Ass'y Removal

1) Remove the Washer Slit ❶.
2) Lift the Holder Clutch Ass'y ❷.

Note: When you reinstall Holder Clutch Ass'y
1) Check the condition of spring as shown in detail A.
2) Don't push Holder Clutch Ass'y down with excessive force Just insert Holder Clutch Ass'y into post center with dead force and Rotate it smoothly.
Be sure to confirm that spring is in the slit of Gear Center Ass'y as shown in detail B.

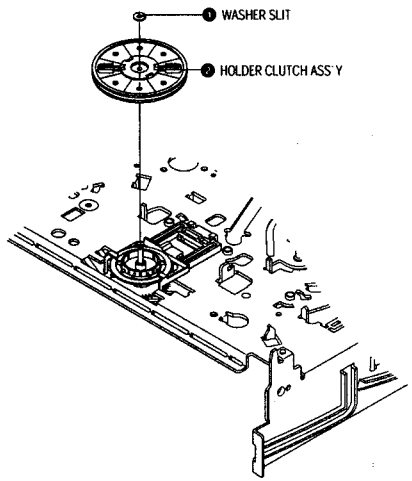

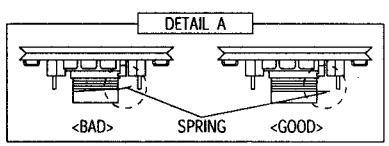

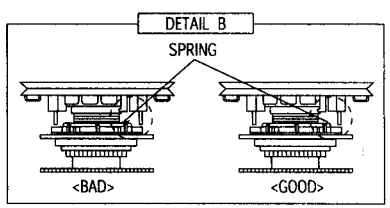

Fig. 2-28 Holder Clutch Ass'y Removal

2-4-17 Lever Up Down Ass'y, Gear Center Ass'y Removal

1) Remove the 2 hooks in the direction of arrow as shown Fig. 2-29 and lift the Lever Up Down Ass'y ❶.
2) Lift the Gear Center Ass'y ❷.

Assembly:

1) Insert the Lever Up Down Ass'y ❶ in the rectangular holes on Main Base as shown in Fig 2-30.
2) Lift the Lever Up Down Ass'y ❶ about 35°. (Refer to Fig 2-30)
3) Insert Ring of the Gear Center Ass'y ❸ in the Guide of the Lever Up Down Ass'y ❶.
4) Insert the Gear Center Ass'y ❷ in the post on Main Base.
5) Push down the Lever Up Down Ass'y ❶ for locking of the Hook.

Note:

1) Take care not to separate and sentence does not mark sense.
2) Be sure to confirm that Ring of the Gear Center Ass'y ❸ is in the Guide of the Lever Up Down Ass'y ❶ after finishing assembly of Lever Up Down Ass'y ❶ and Gear Center Ass'y ❷.

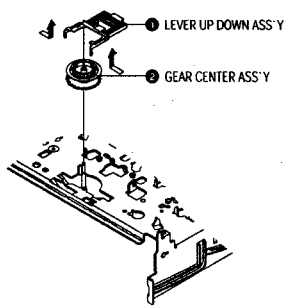

Fig. 2-29 Lever Up Down Ass'y Removal

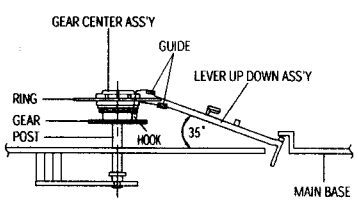

Fig. 2-30 Lever Up Down Ass'y Removal

2-4-18 Guide Cassette Door Removal

1) Lift the Hook [A].
2) Rotate the Guide Cassette Door ❶ in the direction of arrow.

Note: After reinstalling the Guide Cassette Door ❶ sure the Hook [A].

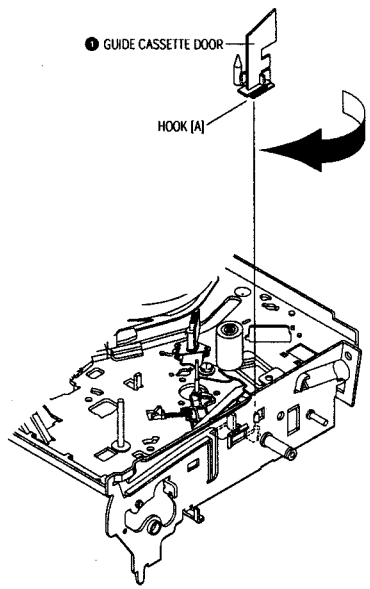

Fig. 2-31 Guide Cassette Door Removal

2-4-19 Lever Unit Pinch Ass'y, Plate Joint, Spring Pinch Drive Removal

1) Lift the Unit Pinch Ass'y ❶.
2) Remove the Plate Joint ❷ from Lever Pinch Drive.
3) Remove the Spring Pinch Drive ❸.

Note:

1) Take extreme care not to touch the grease on the Roller Pinch.
2) When reinstalling, be sure to apply grease on the post pinch roller.

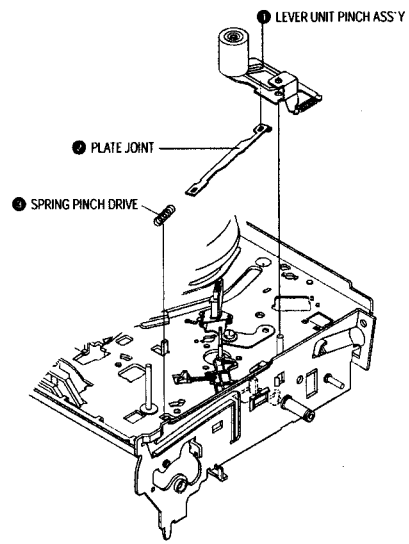

Fig. 2-32 Lever Unit Pinch Ass'y, Plate Joint, Spring Pinch Drive Removal

2-4-20 Lever #9 Guide Ass'y Removal

1) Remove the Spring #9 Guide ❶.
2) Lift the Spring #9 Guide Ass'y ❷ in the direction of arrow "A".

Note:

1) Take extreme care not to get grease on the tape Guide Post.
2) After reinstalling, check the bottom side of the Post #9 Guide to the top side of Main Base.

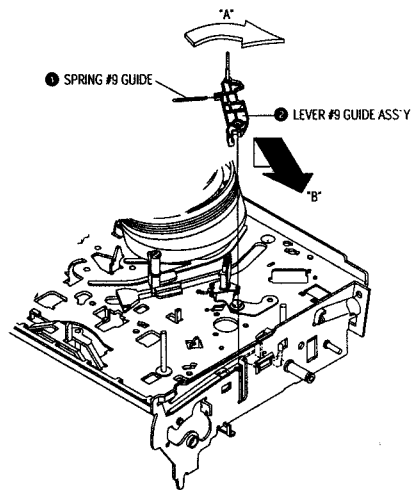

Fig. 2-33 Lever #9 Guide Ass'y Removal

2-4-21 FE Head Removal

1) Remove the screw ❶.
2) Lift the FE Head ❷.

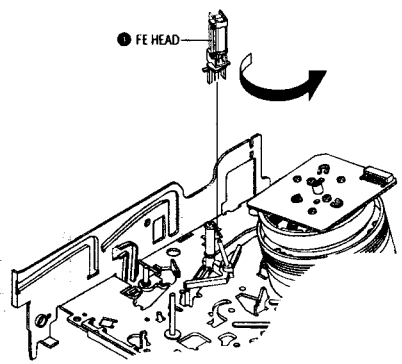

Fig. 2-34 FE Head Removal

2-4-22 ACE Head Removal

1) Pull out the FPC from connector of ACE Head Ass'y ❷.
2) Remove the screw ❶.
3) Lift the ACE Head Ass'y ❷.

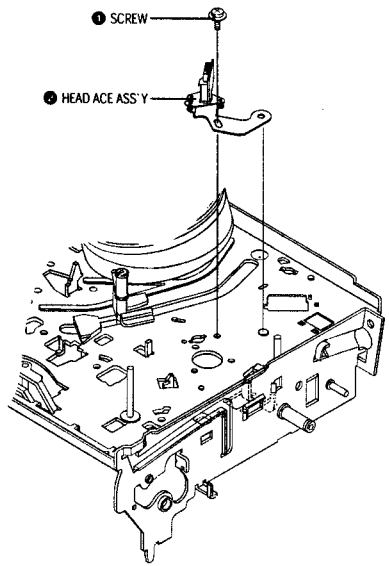

Fig. 2-35 ACE Head Removal

2-4-23 Slider S, T Ass'y Removal

1) Move the Slider S, T Ass'y ❶, ❷ to slot, and then lift it to remove. (Refer to arrow)

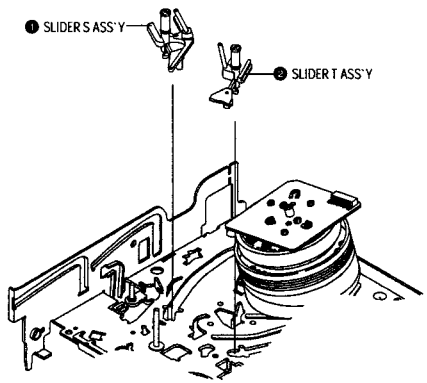

Fig. 2-36 Slider S, T Ass'y Removal

2-4-24 Plate Ground Deck, Cylinder Ass'y Removal

1) Remove the 3 Screws ❶.
2) Lift the Plate Ground Deck ❷.
3) Lift the Cylinder Ass'y ❸.

Assembly:

1) Match the 3 holes in the bottom of Cylinder Ass'y ❸ to the 3 holes of Main Base as attending not to drop or knock the Cylinder Ass'y ❸.
2) Tighten the 1 Screw ❶.
3) Match the Plate Ground Deck ❷ to the Hole of Base Main.
4) Tighten the other 2 Screws ❶.

Note:

1) Take care not to touch the Cylinder Ass'y ❸ and the tape guide post at reinstalling.
2) When reinstalling, Don't push down too much on Screw Driver.

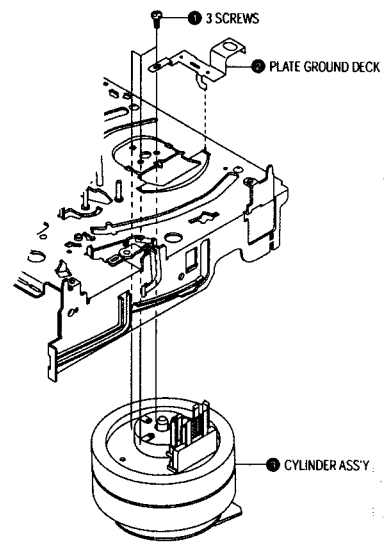

Fig. 2-37 Plate Ground Deck, Cylinder Ass'y Removal

2-4-25 Belt Pulley Removal

1) Remove the Belt Pulley ❶.

Note: Take extreme care not to get grease on Belt Pulley ❶ at assembling or reassembling.

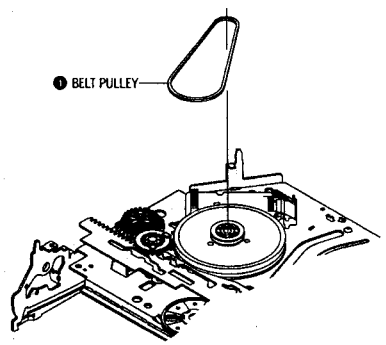

Fig. 2-38 Belt Pulley Removal

2-4-26 Motor Capstan Ass'y Removal

1) Remove the Damper Capstan ❶ in the direction of arrow.
2) Remove the 3 Screws ❷.
3) Remove the Motor Capstan Ass'y ❸.

Assembly:
1) Match the 3 holes of Motor Capstan Ass'y ❸ to the 3 holes of Main Base. Be careful not to drop or knock the Motor Capstan Ass'y ❸.
2) Tighten the 3 Screws ❷ in the direction of arrow as shown detail drawing.
3) Assemble the Damper Capstan ❶.

Note: After tightening screws, check if there is gap between the head of screws and the top side of Main Base. There should have no gap between the head of screws and the top side of Main Base.
After reinstalling, adjusting the tape transport system again.

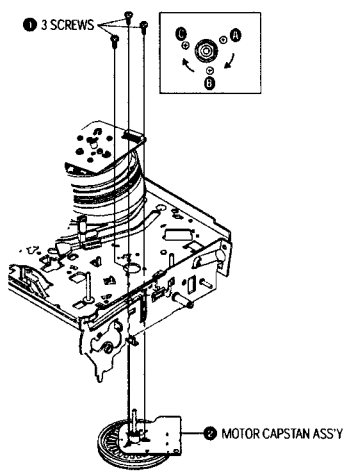

Fig. 2-39 Motor Capstan Ass'y Removal

2-4-27 Post #8 Guide Ass'y Removal

1) Rotate the Post #8 Guide Ass'y ❶ in the direction of arrow to lift up.

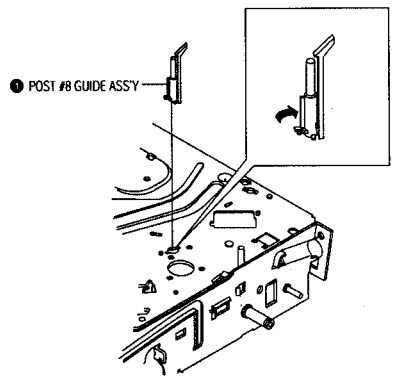

Fig. 2-40 Post #8 Guide Ass'y Removal

2-4-28 Level Head Cleaner Ass'y Removal (Optional)

1) Release the Hook ❶.
2) Lift the Lever Head Cleaner Ass'y ❷.

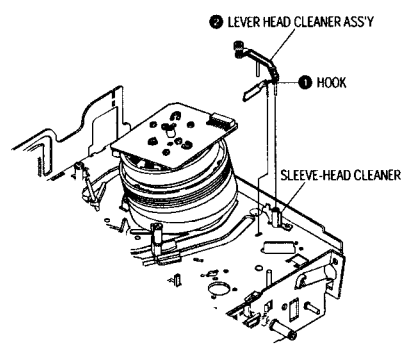

Fig. 2-41 Lever Head Cleaner Ass'y Removal

2-4-29 How to Eject the Cassette Tape (If the unit does not operate on condition that is inserted into housing Ass'y)

1) Turn the Gear worm ❶ clockwise with screw driver.(Refer to arrow)
(Other method: Remove the Screw of Motor Load Ass'y, Separate the Motor Load Ass'y)

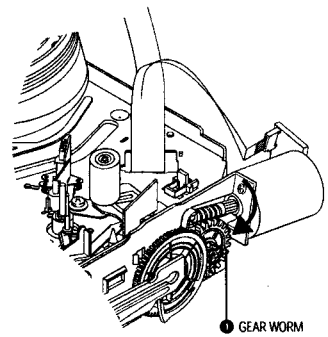

Fig. 2-42

2) When Slider S,T are approched in the position of unloading, rotate holder Clutch counterclockwise after inserting screw driver in the hole of frame's bottom in order to wind the unwinded tape.
(Refer to Fig.2-43)
(If you rotate Gear Worm ❶ continuously when tape is in state of unwinding, you may cause a tape contamination by grease and tape damage.
Be sure to wind the unwinded tape in the state of set horizontly.)
3) Rotate Gear Worm ❶ clockwise using screw driver again up to the state of eject mode and then pick out the tape.(Refer to Fig.2-42)

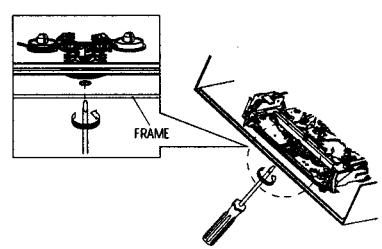

Fig. 2-43

2-5 THE TABLE OF CLEANING, LUBRICATION AND REPLACEMENT TIME ABOUT PRINCIPAL PARTS

1) The replacement time of parts is not life of parts.
2) The table 2-1 is that the VCR Set is in normal condition (normal temperature, normal humidity).
   The checking period may be changed owing to the condition of use, runtime and environmental conditions.
3) Life of the Cylinder Ass'y is depend on the condition of use.
4) See exploded view for location of each parts.

<Table 2-1>

	Parts Name	Checking Period										Remark
		500	1000	1500	2000	2500	3000	3500	4000	4500	5000	
TAPE PATH SYSTEM	POST TENSION	Δ	Δ	Δ	Δ	Δ	Δ	Δ	Δ	Δ	Δ	- To clean the parts, use patch and alcohol (solvent).
	SLANT POST S, T	Δ	Δ	Δ	Δ	Δ	Δ	Δ	Δ	Δ	Δ	
	#8 GUIDE SHAFT	Δ	Δ	Δ	Δ	Δ	Δ	Δ	Δ	Δ	Δ	- After cleaning, use the video tape after alcohol is gone away completely.
	CAPSTAN SHAFT	Δ	Δ	Δ	Δ	Δ	Δ	Δ	Δ	Δ	Δ	
	#9 GUIDE POST	Δ	Δ	Δ	Δ	Δ	Δ	Δ	Δ	Δ	Δ	
	#3 GUIDE POST	Δ	Δ	Δ	Δ	Δ	Δ	Δ	Δ	Δ	Δ	
	GUIDE ROLLER S, T	Δ	Δ	Δ	0	0	0	0	0	0	0	- We recommend to use oil [EP-50] or solvent.
	CYLINDER ASS'Y	Δ	0	0	0	0	0	0	0	0	0	
	FE HEAD	Δ	Δ	Δ	0	0	0	0	0	0	0	- One or two drops of oil should be applied after cleaning with alcohol.
	ACE HEAD	Δ	0	0	0	0	0	0	0	0	0	
	PINCH ROLLER	Δ	0	0	0	0	0	0	0	0	0	
	POST REEL S, T		◆		◆		◆		◆		◆	- Periodic time of applying oil (Apply oil after cleaning)
	SLEEVE TENSION		◆		◆		◆		◆		◆	- The excessive applying oil may be the cause of malfunction.
	POST CENTER		◆		◆		◆		◆		◆	
	LEVER IDLE BOSS (2Point)		◆		◆		◆		◆		◆	
DRIVING SYSTEM	CAPSTAN MOTOR PULLEY	Δ	Δ	Δ	Δ	Δ	0	0	0	0	0	
	BELT PULLEY				0	0	0	0	0	0	0	
	HOLDER CLUTCH ASS'Y	Δ	0	0	0	0	0	0	0	0	0	
	GEAR CENTER ASS'Y		0	0	0	0	0	0	0	0	0	
	GEAR IDLE (2Point)		0	0	0	0	0	0	0	0	0	
	LOADING MOTOR		0	0	0	0	0	0	0	0	0	
BRAKE SYSTEM	BAND BRAKE ASS'Y		0	0	0	0	0	0	0	0	0	
	BRAKE T ASS'Y		0	0	0	0	0	0	0	0	0	

Δ : Cleaning 0 : Check and replacement in necessary ◆ : Add Oil

2-6-2 Ass'y P/U Deck Removal

1) Disconnect DCN2 ❶, DCN3 ❷.
2) Lift down the Assy P/U Deck ❸ while simultaneously pushing 2 Hooks ❹, ❺ in the direction of arrow "A", "B".

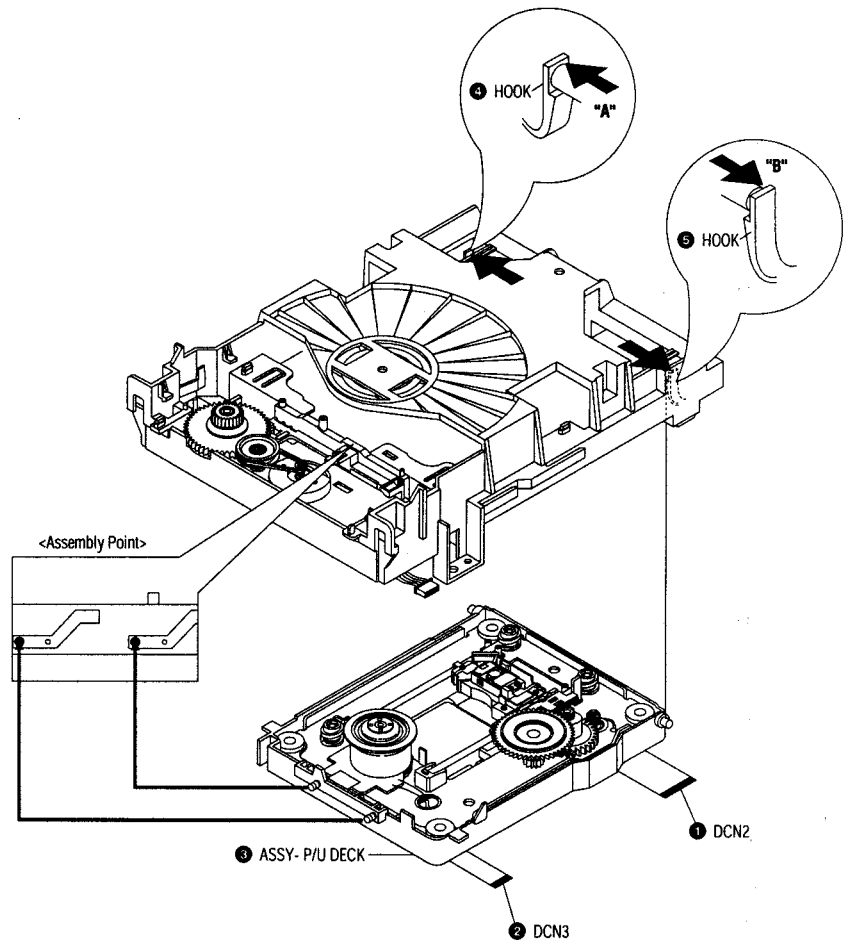

Fig. 2-45 Assy P/U Deck Removal

2-6-2 Assy P/U Deck Removal

1) Disconnect DCN2 ❶, DCN3 ❷.
2) Lift down the Assy P/U Deck ❸ while simultaneously pushing 2 Hooks ❹, ❺ in the direction of arrow "A", "B".

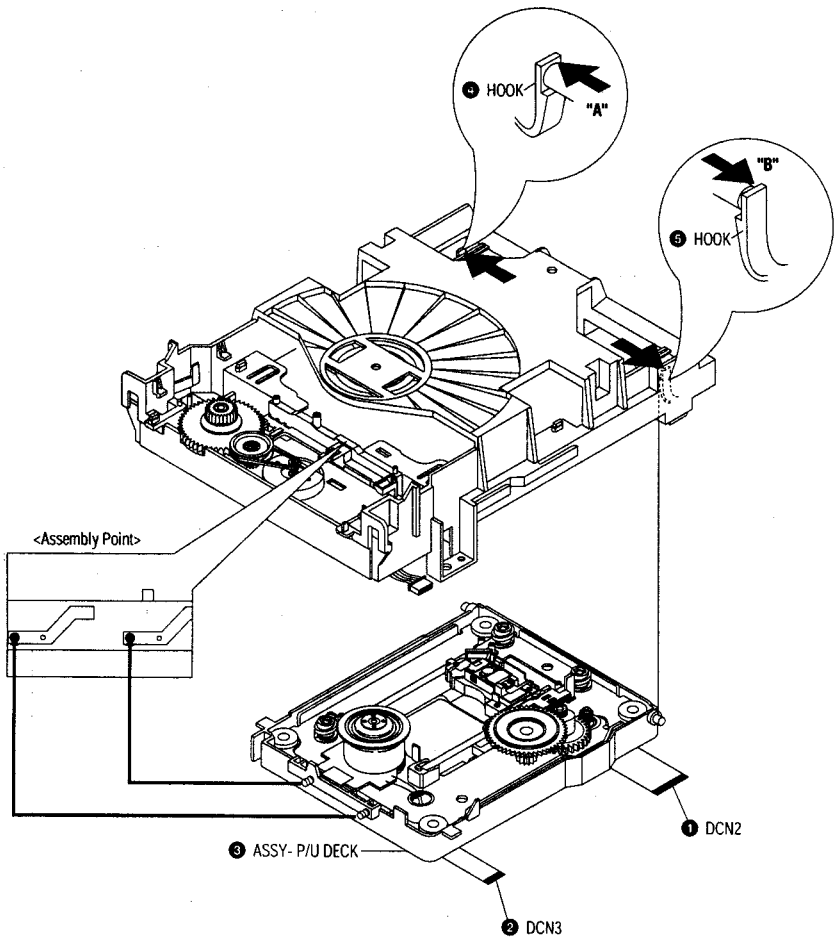

Fig. 2-45 Assy P/U Deck Removal

2-6-3 Housing Ass'y Removal

1) Remove Belt ❶.
2) Push the Hook ❷ in the direction arrow "A" and lift up Pulley Gear ❸.
3) Push the Slider Housing ❺ in the direction arrow "B" and lift up the Gear Tray ❹.
4) Lift up the Slider Housing ❺.
5) Remove 2 Screws ❻ and lift down the Motor Load Assy ❼.
6) Remove Clamper Ass'y ❽.

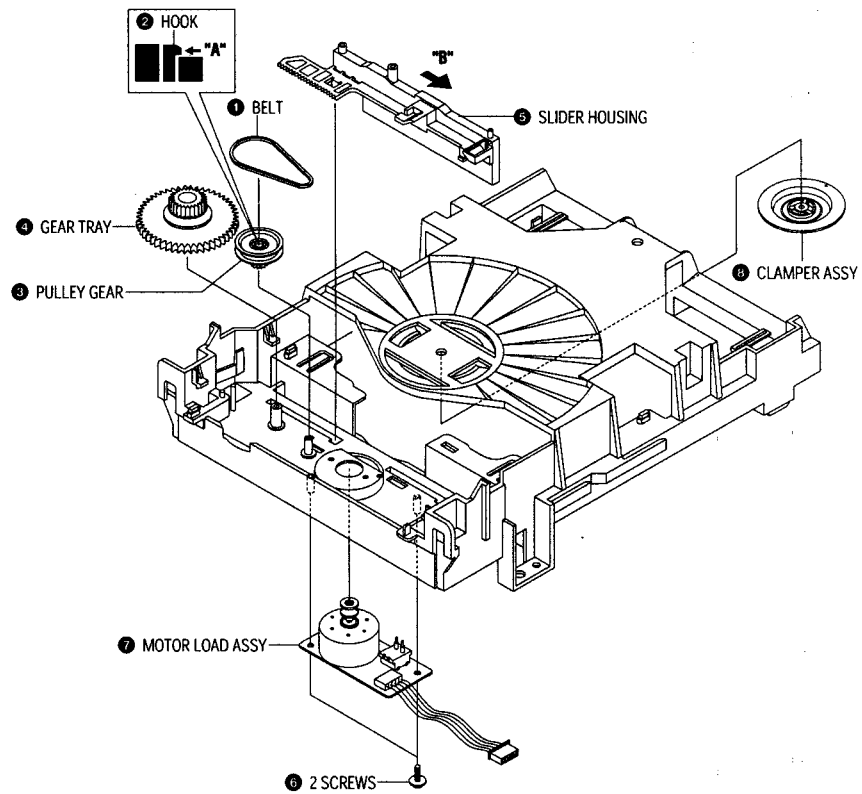

Fig. 2-46 Housing Ass'y Removal

2-6-4 Sub Chassis Removal

1) Remove the Soldering of Motor Feed (+, - wire) ❶.
2) Remove the 4 Screws ❷.
3) Lift up the Ass'y Brkt Deck ❸.

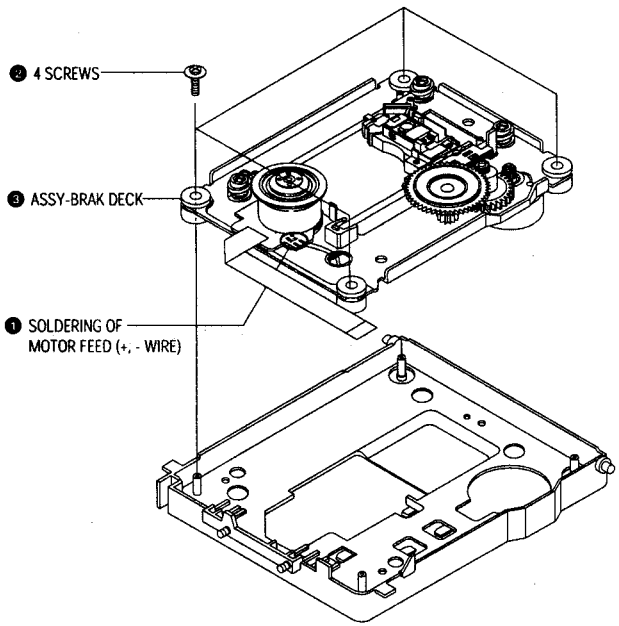

Fig. 2-47 Sub Chassis Removal

2-6-5 Ass'y Brkt Deck Removal

1) Push the Hook ❶ in the direction arrow "A" and lift up Gear Feed B ❷.
2) Remove 3 Screws ❸ and 3 Holder Cam Skew ❹.
3) Remove Shaft Pick-Up ❺ and Pick-Up Assy ❻.
4) Remove Gear Feed A ❼.
5) Remove 2 Screws ❽.
6) Remove Motor Feed Ass'y ❾.
7) Remove 3 Screws ❿.
8) Remove Motor Spindle ⓫.

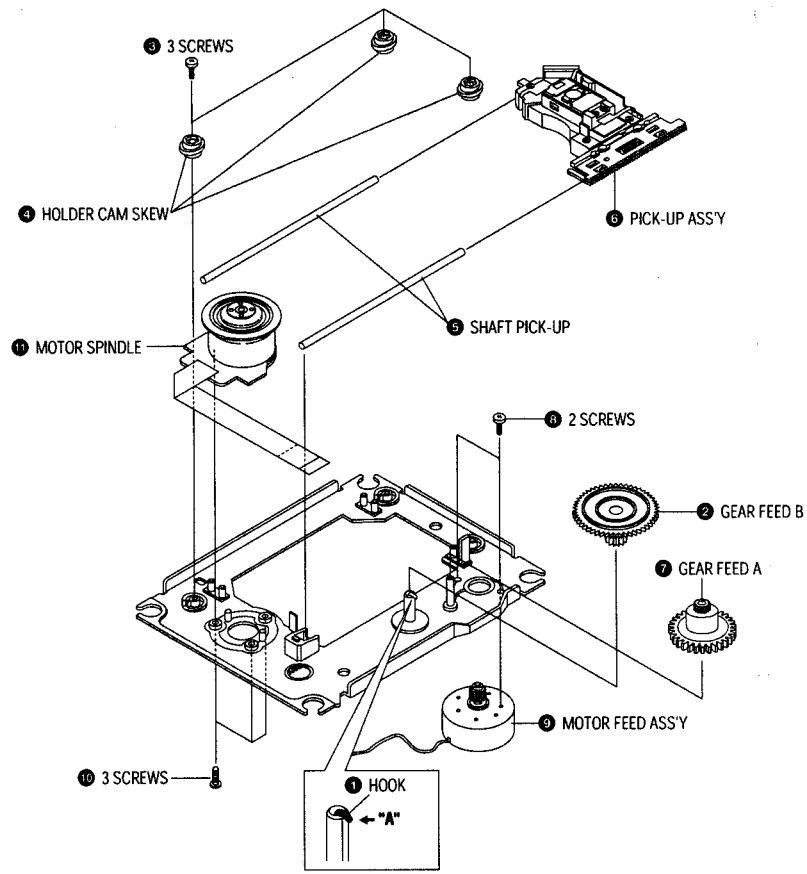

Fig. 2-48 Ass'y Brkt Deck Removal

3. BLOCK DIAGRAM

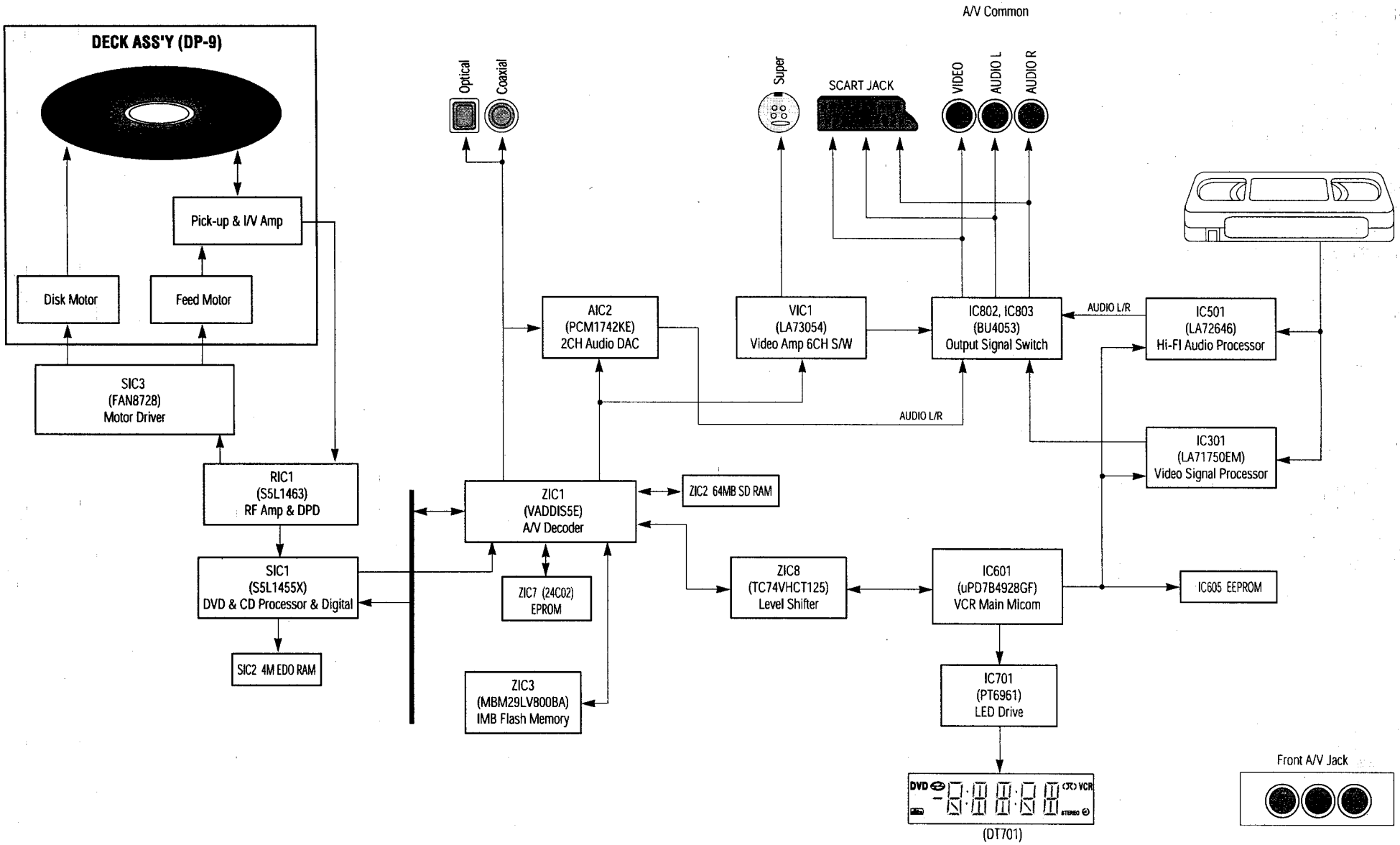

MEMO

4. PCB DIAGRAMS

4-1 VCR Main ---------- 4-3

4-2 DVD Main ---------- 4-7

4-3 S.M.P.S. ---------- 4-11

4-4 Function ---------- 4-13

4-5 Dial-Timer (SLV-D950B/D950E/D950GI/D910AZ Only) ---------- 4-13

COMPONENT SIDE

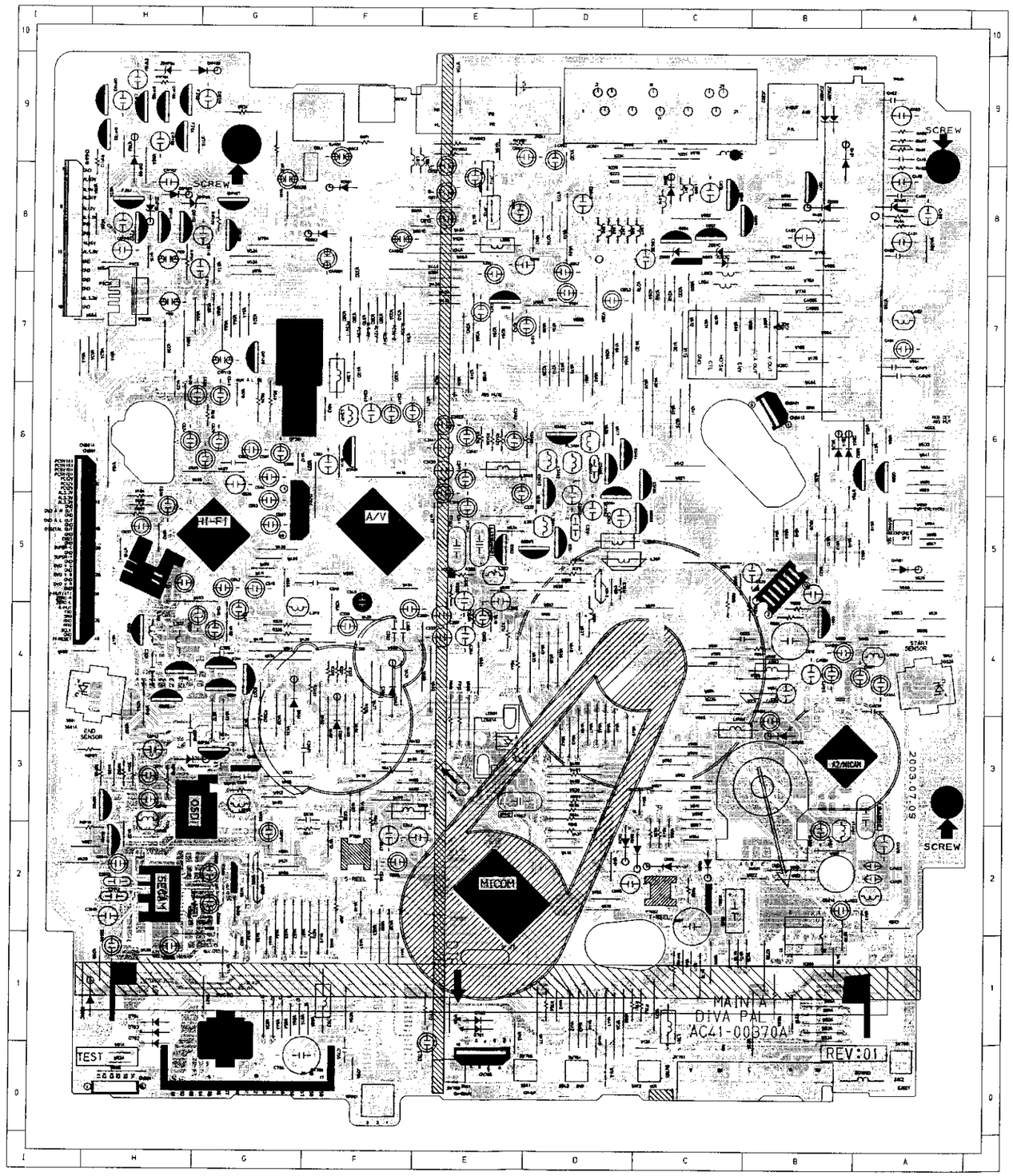

CONDUCTOR SIDE

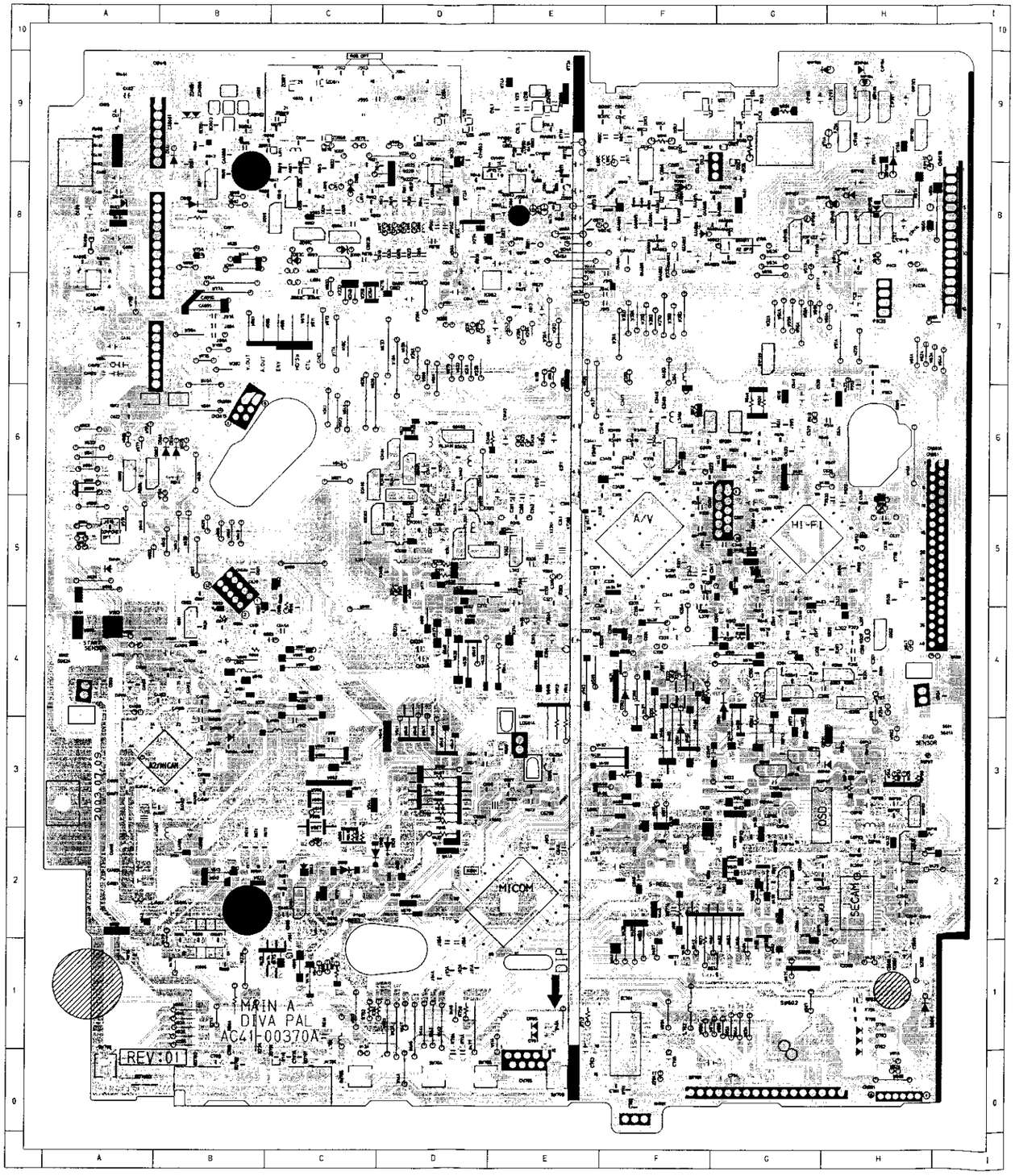

4-2 DVD MAIN

COMPONENT SIDE

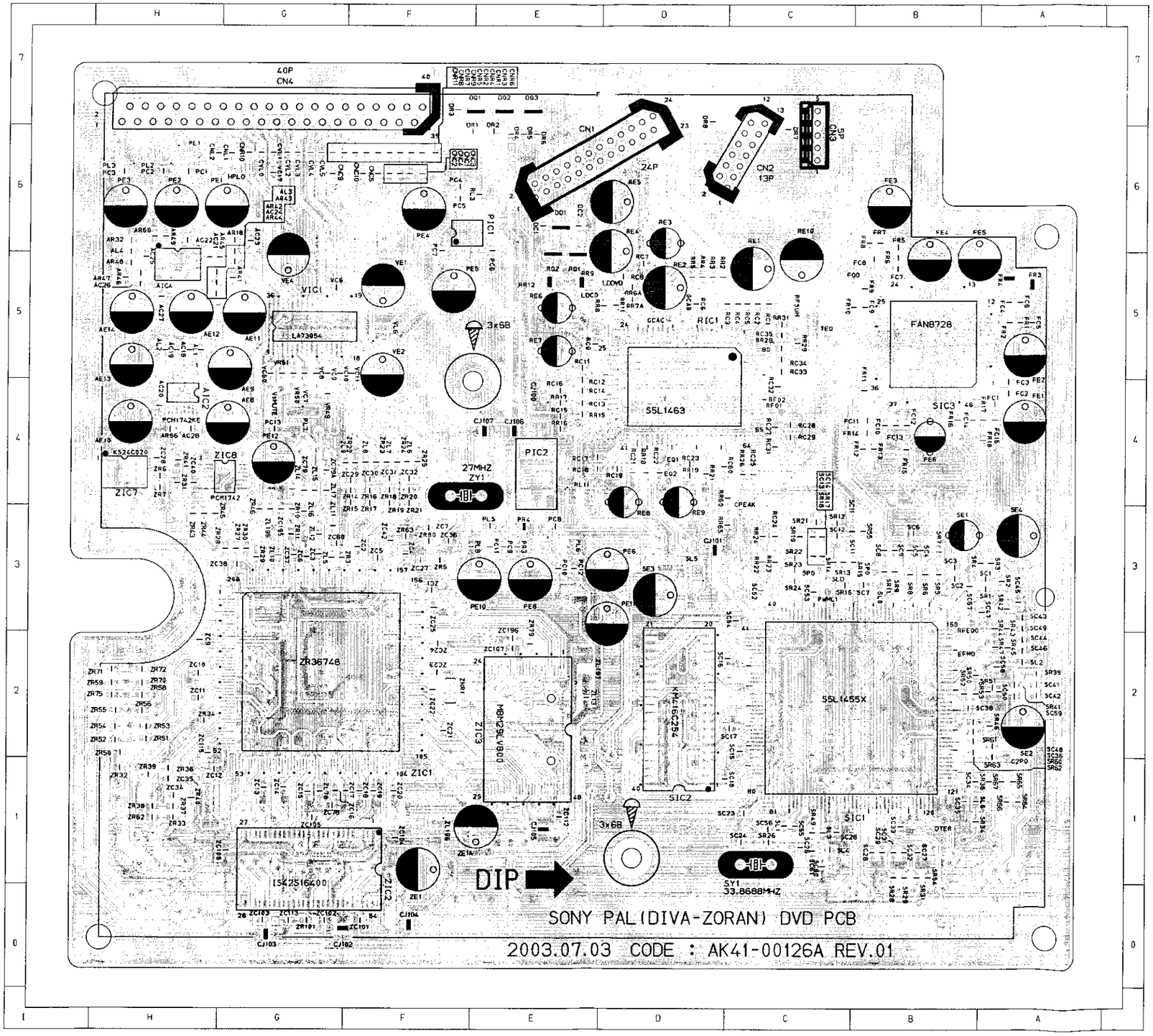

CONDUCTOR SIDE

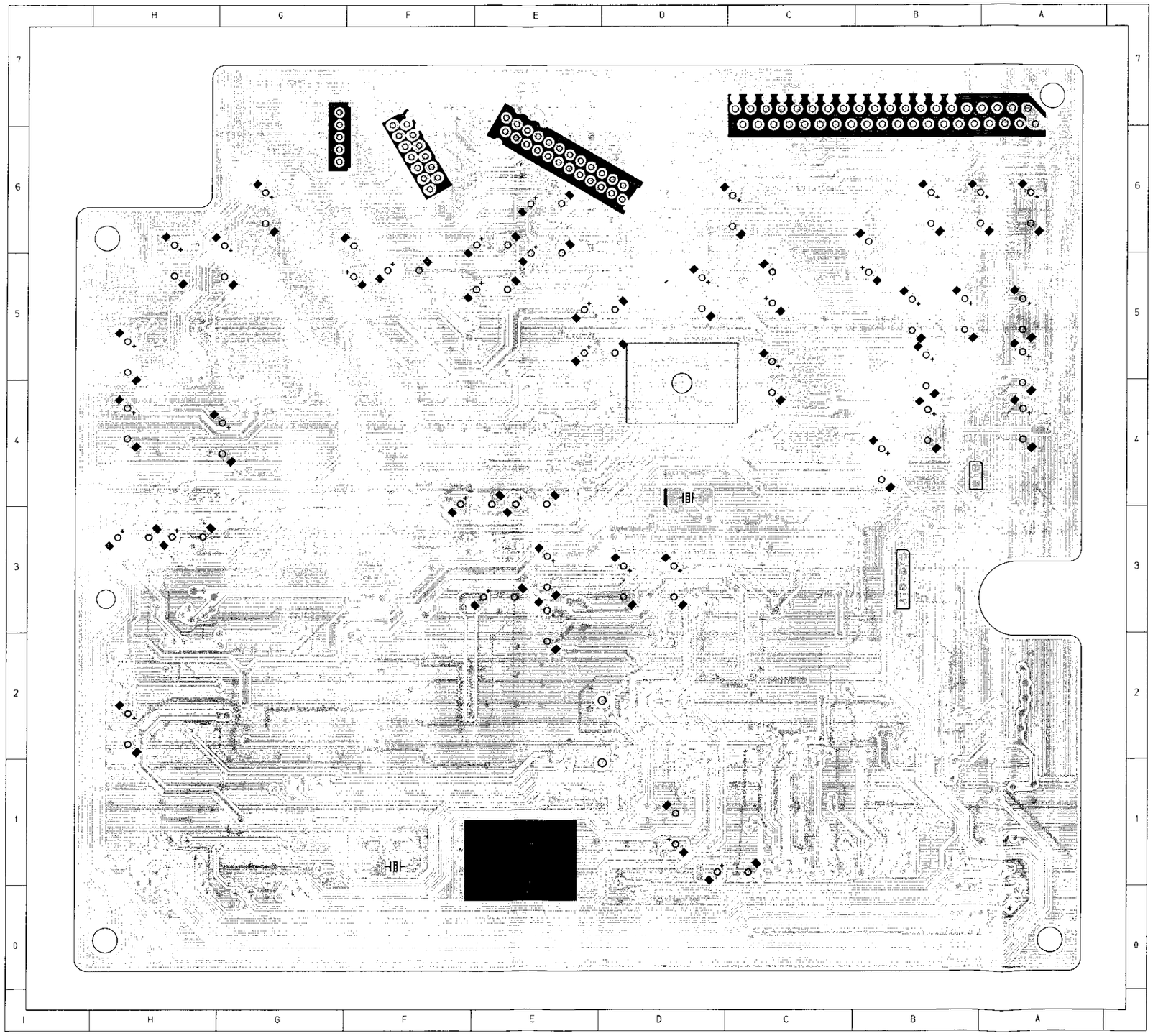

COMPONENT SIDE

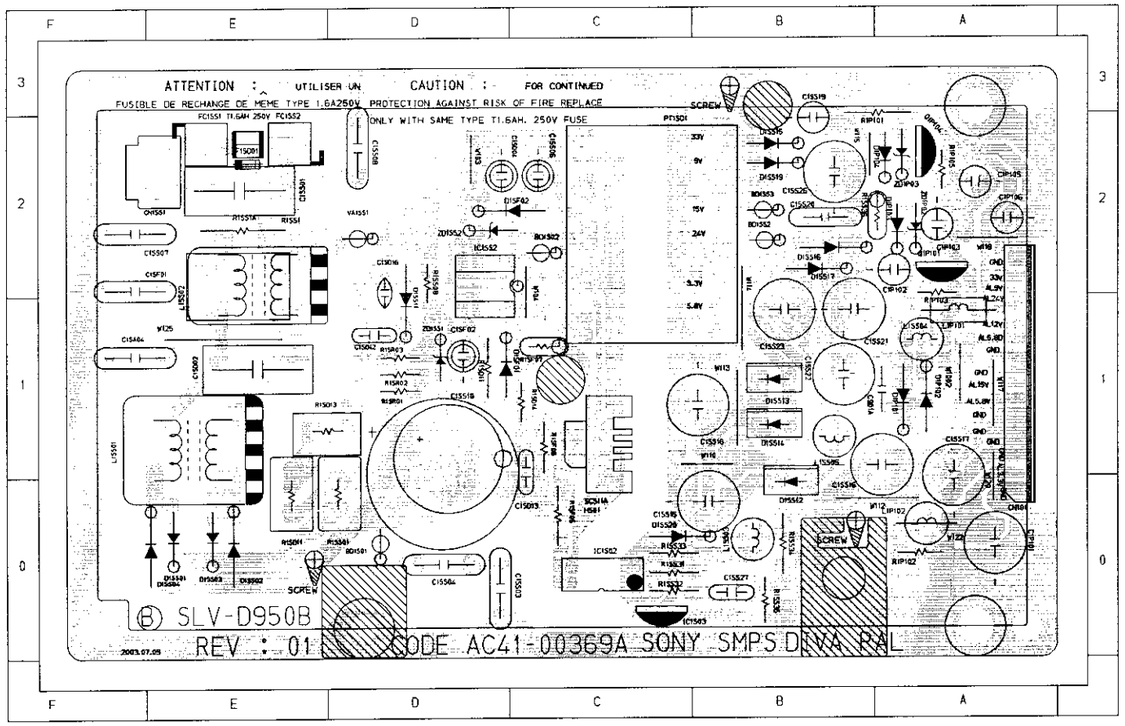

CONDUCTOR SIDE

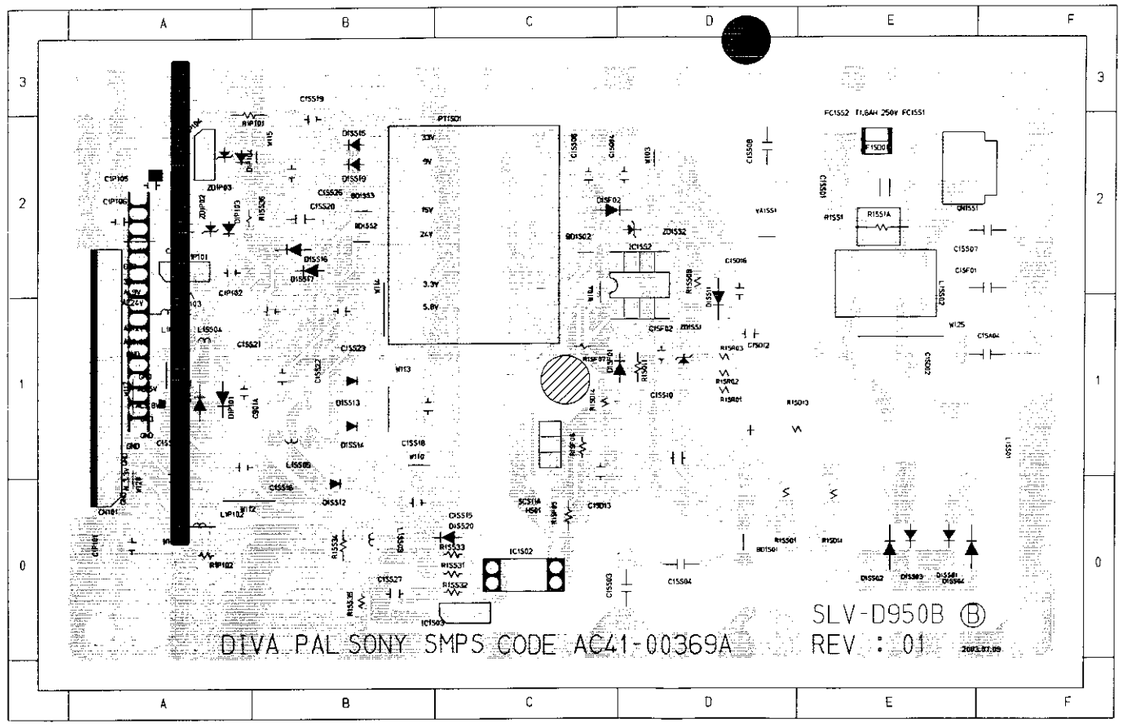

4-4 FUNCTION

COMPONENT SIDE

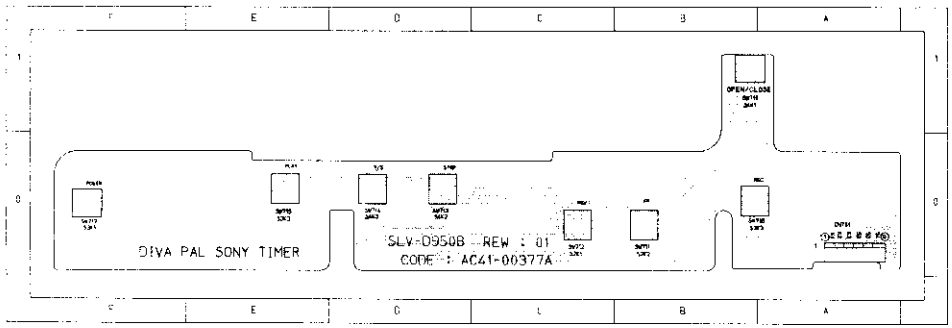

CONDUCTOR SIDE

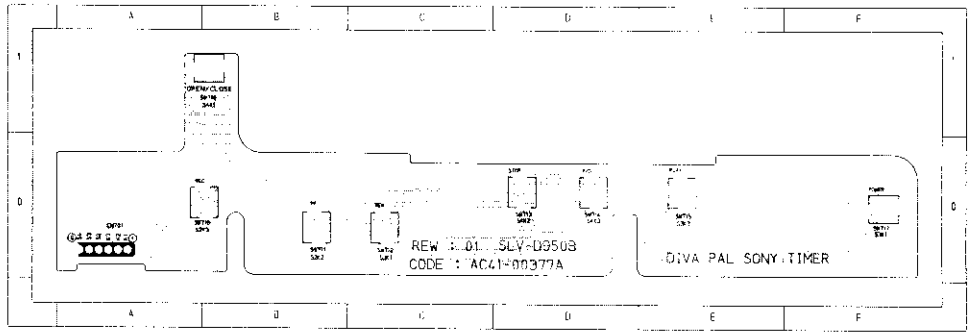

4-5 DIAL-TIMER (SLV-D950B/D950E/D950GI/D910AZ Only)

COMPONENT SIDE

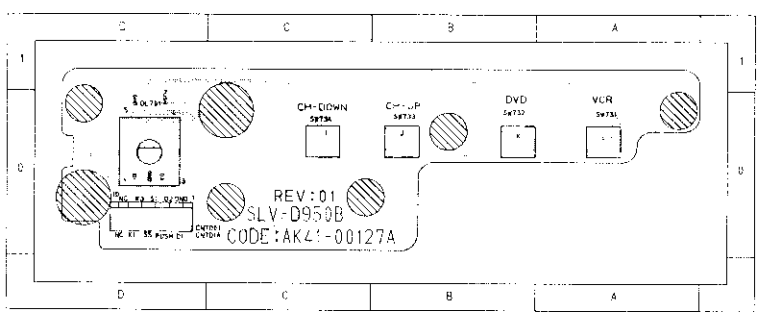

CONDUCTOR SIDE

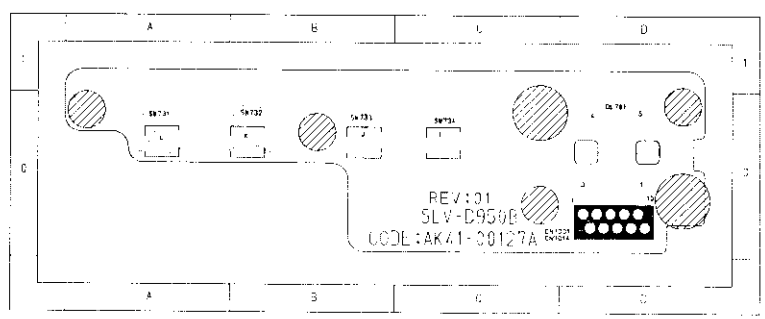

MEMO

5. SCHEMATIC DIAGRAMS

◆ Block Identification of Main PCB ---------- 5-3

VCR Main PCB

5-1 S.M.P.S. ---------- 5-5

5-2 Power Drive ---------- 5-7

5-3 OSD/VPS/PDS ---------- 5-9

5-4 A2/NICAM ---------- 5-11

5-5 Audio/Video ---------- 5-13

5-6 Hi-Fi ---------- 5-15

5-7 Input-Output ---------- 5-17

5-8 TM ---------- 5-19

5-9 Syscon ---------- 5-21

5-10 Logic/Function ---------- 5-23

5-11 SECAM (SLV-D950B/D910B/D910R Only) ---------- 5-25

DVD Main PCB

5-12 DVD Main-Micom/AV Decoder ---------- 5-27

5-13 DVD Servo ---------- 5-29

5-14 DVD Audio/Video ---------- 5-31

Note

For schematic Diagram
- Resistors are in ohms, 1/8W unless otherwise noted.

Special note :
Most semiconductor devices are electrostatically sensitive and therefore require the special handling techniques described under the "electrostatically sensitive (ES) devices" section of this service manual.

Important safety notices :
Components identified with the mark ⚠ have the special characteristics for safety. When replacing any of these components, Use only the same type.

◆ BLOCK IDENTIFICATION OF MAIN PCB

VCR MAIN PCB

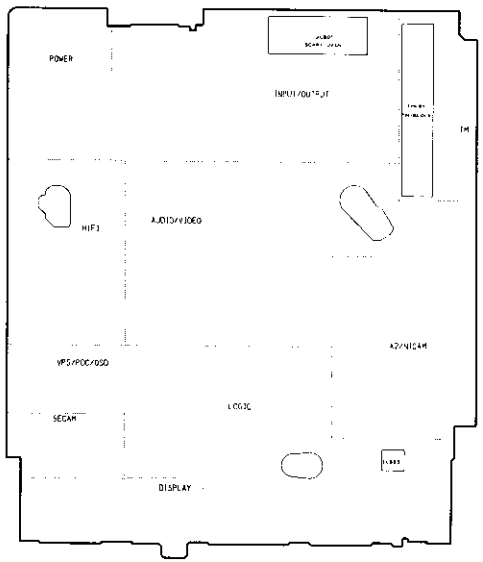

<Component Side>

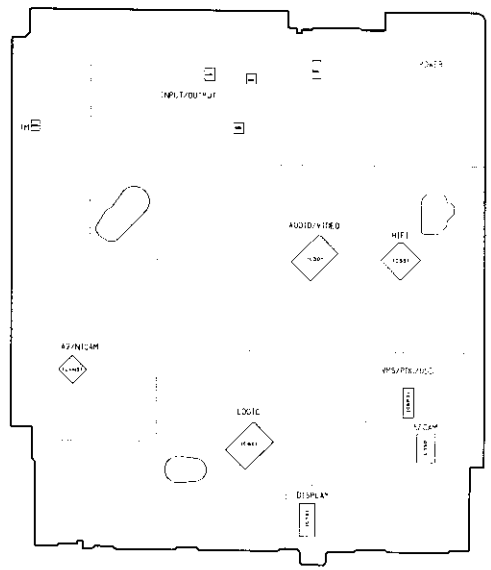

<Conductor Side>

DVD MAIN PCB

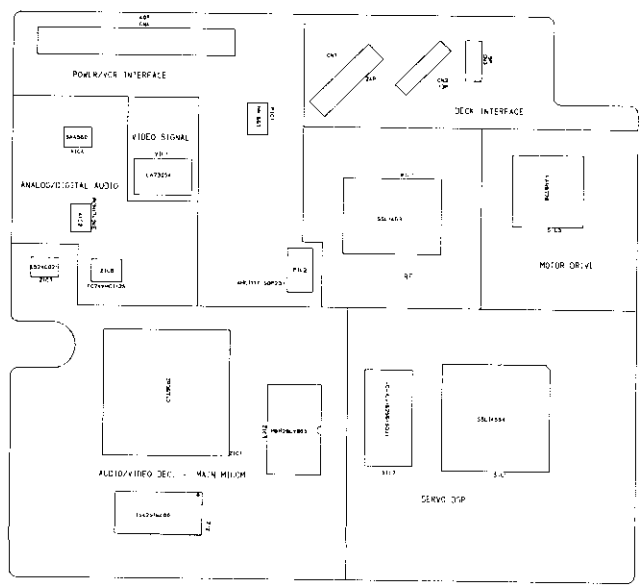

<Component Side>

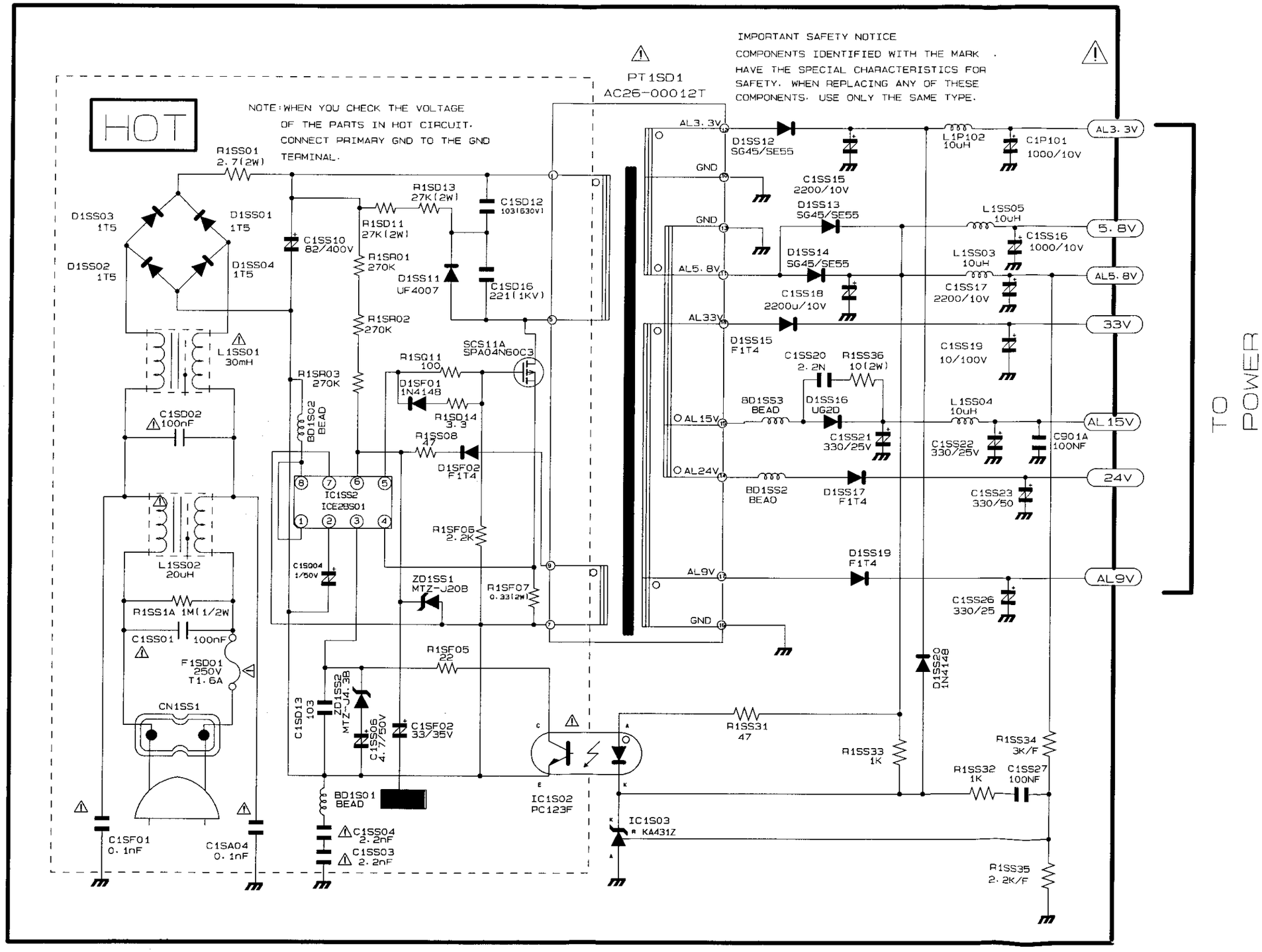
HOT
NOTE: WHEN YOU CHECK THE VOLTAGE OF THE PARTS IN HOT CIRCUIT. CONNECT PRIMARY GND TO THE GND TERMINAL.
PT1SD1
AC26-00012T
IMPORTANT SAFETY NOTICE
COMPONENTS IDENTIFIED WITH THE MARK . HAVE THE SPECIAL CHARACTERISTICS FOR SAFETY. WHEN REPLACING ANY OF THESE COMPONENTS. USE ONLY THE SAME TYPE.
R1SS01 2.7(2W)
D1SS03 1T5
D1SS01 1T5
D1SS02 1T5
D1SS04 1T5
C1SS10 82/400V
R1SD13 27K(2W)
R1SD11 27K(2W)
C1SD12 103(630V)
R1SR01 270K
D1SS11 UF4007
C1SD16 221(1KV)
R1SR02 270K
R1SR03 270K
L1SS01 30mH
SCS11A SPA04N60C3
R1SQ11 100
D1SF01 1N4148
R1SD14 3.3
R1SS08 47
D1SF02 F1T4
BD1S02 BEAD
C1SD02 100nF
IC1SS2 ICE2BS01
R1SF06 2.2K
C1S004 1/50V
L1SS02 20uH
R1SS1A 1M(1/2W
C1SS01 100nF
F1SD01 250V T1.6A
CN1SS1
ZD1SS1 MTZ-J20B
R1SF07 0.33(2W)
R1SF05 22
C1SD13 103
ZD1SS2 MTZ-J4.3B
C1SS06 4.7/50V
C1SF02 33/35V
BD1S01 BEAD
C1SS04 2.2nF
C1SS03 2.2nF
C1SF01 0.1nF
C1SA04 0.1nF
IC1S02 PC123F
IC1S03 KA431Z
AL3.3V
GND
GND
AL5.8V
AL33V
AL15V
AL24V
AL9V
GND
D1SS12 SG45/SE55
C1SS15 2200/10V
D1SS13 SG45/SE55
D1SS14 SG45/SE55
C1SS18 2200u/10V
D1SS15 F1T4
C1SS20 2.2N
R1SS36 10(2W)
BD1SS3 BEAD
D1SS16 UG2D
C1SS21 330/25V
BD1SS2 BEAD
D1SS17 F1T4
D1SS19 F1T4
L1P102 10uH
C1P101 1000/10V
L1SS05 10uH
C1SS16 1000/10V
L1SS03 10uH
C1SS17 2200/10V
C1SS19 10/100V
L1SS04 10uH
C1SS22 330/25V
C901A 100NF
C1SS23 330/50
C1SS26 330/25
D1SS20 1N4148
R1SS31 47
R1SS33 1K
R1SS32 1K
R1SS34 3K/F
C1SS27 100NF
R1SS35 2.2K/F
3.3V
5.8V
AL5.8V
33V
AL15V
24V
AL9V
TO POWER

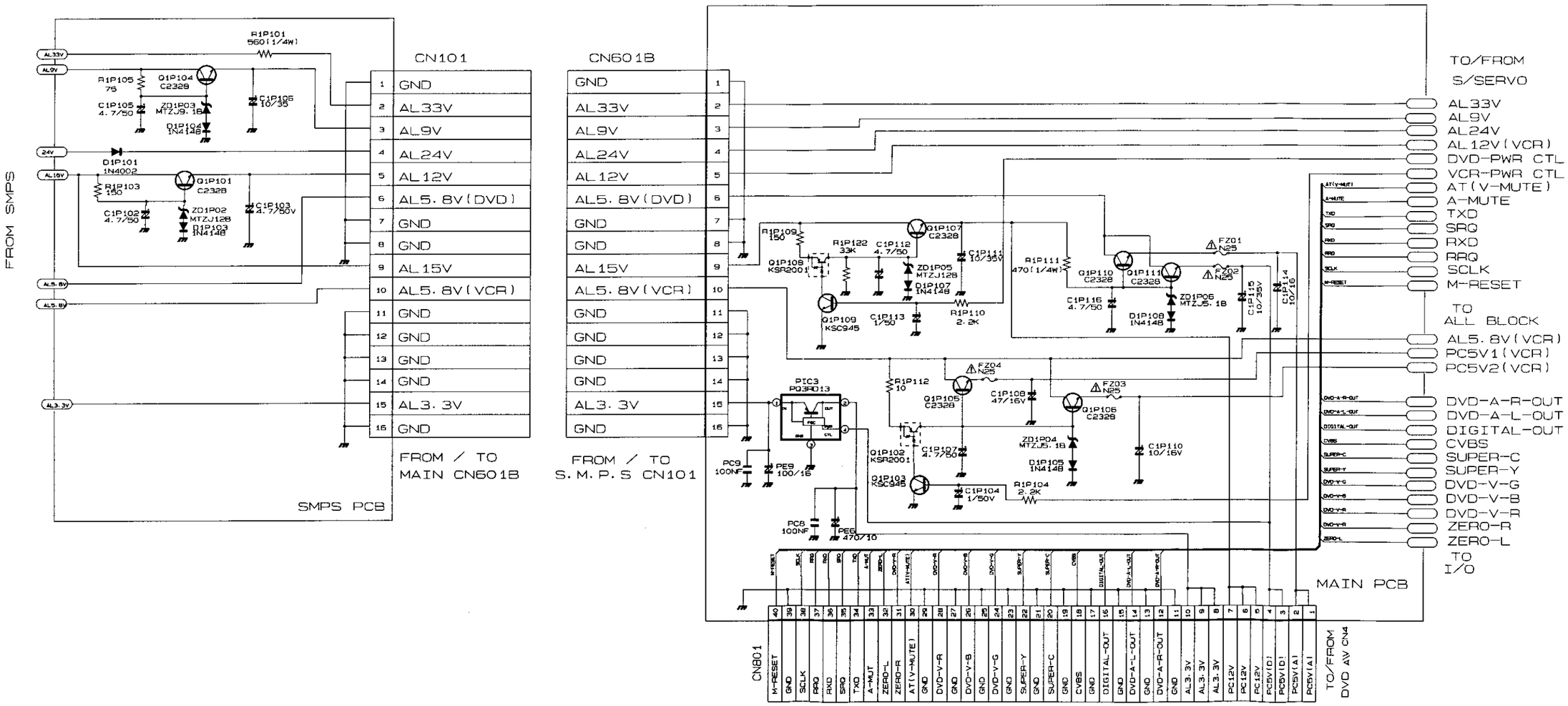
FROM SMPS
R1P101 560(1/4W)
AL33V
AL9V
24V
AL15V
AL5.8V
AL5.8V
R1P105 75
Q1P104 C2328
C1P105 4.7/50
ZD1P03 MTZJ9.1B
D1P106 IN4148
C1P106 10/35
D1P101 IN4002
R1P103 150
Q1P101 C2328
C1P102 4.7/50
ZD1P02 MTZJ12B
D1P103 IN4148
C1P103 4.7/50
AL3.3V
CN101
1 GND
2 AL33V
3 AL9V
4 AL24V
5 AL12V
6 AL5.8V(DVD)
7 GND
8 GND
9 AL15V
10 AL5.8V(VCR)
11 GND
12 GND
13 GND
14 GND
15 AL3.3V
16 GND
FROM / TO
MAIN CN601B
SMPS PCB
CN601B
GND 1
AL33V 2
AL9V 3
AL24V 4
AL12V 5
AL5.8V(DVD) 6
GND 7
GND 8
AL15V 9
AL5.8V(VCR) 10
GND 11
GND 12
GND 13
GND 14
AL3.3V 15
GND 16
FROM / TO
S.M.P.S CN101
TO/FROM
S/SERVO
AL33V
AL9V
AL24V
AL12V(VCR)
DVD-PWR CTL
VCR-PWR CTL
AT(V-MUTE)
A-MUTE
TXD
SRQ
RXD
RRQ
SCLK
M-RESET
TO
ALL BLOCK
AL5.8V(VCR)
PC5V1(VCR)
PC5V2(VCR)
DVD-A-R-OUT
DVD-A-L-OUT
DIGITAL-OUT
CVBS
SUPER-C
SUPER-Y
DVD-V-G
DVD-V-B
DVD-V-R
ZERO-R
ZERO-L
TO
I/O
MAIN PCB
R1P109 150
Q1P108 KSR2001
R1P122 33K
C1P112 4.7/50
Q1P107 C2328
C1P111 10/35V
ZD1P05 MTZJ12B
D1P107 IN4148
Q1P109 KSC945
C1P113 1/50
R1P110 2.2K
R1P111 470(1/4W)
Q1P110 C2328
Q1P111 C2328
FZ01 N25
FZ02 N25
C1P116 4.7/50
ZD1P06 MTZJ5.1B
D1P108 IN4148
C1P115 10/35V
C1P114 10/16
PIC3 P03R013
R1P112 10
FZ04 N25
Q1P105 C2328
C1P108 47/16V
FZ03 N25
Q1P106 C2328
ZD1P04 MTZJ5.1B
C1P110 10/16V
Q1P102 KSR2001
C1P107 4.7/50
D1P105 IN4148
Q1P103 KSC945
C1P104 1/50V
R1P104 2.2K
PC8 100NF
PE6 470/10
PC9 100NF
PE9 100/16
CN801
M-RESET 40
GND 39
SCLK 38
RRQ 37
RXD 36
SRQ 35
TXD 34
A-MUT 33
ZERO-L 32
ZERO-R 31
AT(V-MUTE) 30
GND 29
DVD-V-R 28
GND 27
DVD-V-B 26
GND 25
DVD-V-G 24
GND 23
SUPER-Y 22
GND 21
SUPER-C 20
GND 19
CVBS 18
GND 17
DIGITAL-OUT 16
GND 15
DVD-A-L-OUT 14
GND 13
DVD-A-R-OUT 12
GND 11
AL3.3V 10
AL3.3V 9
PC12V 8
PC12V 7
PC12V 6
PC5V(D) 5
PC5V(D) 4
PC5V(A) 3
PC5V(A) 2
PC5V(A) 1
TO/FROM
DVD A/V CN4

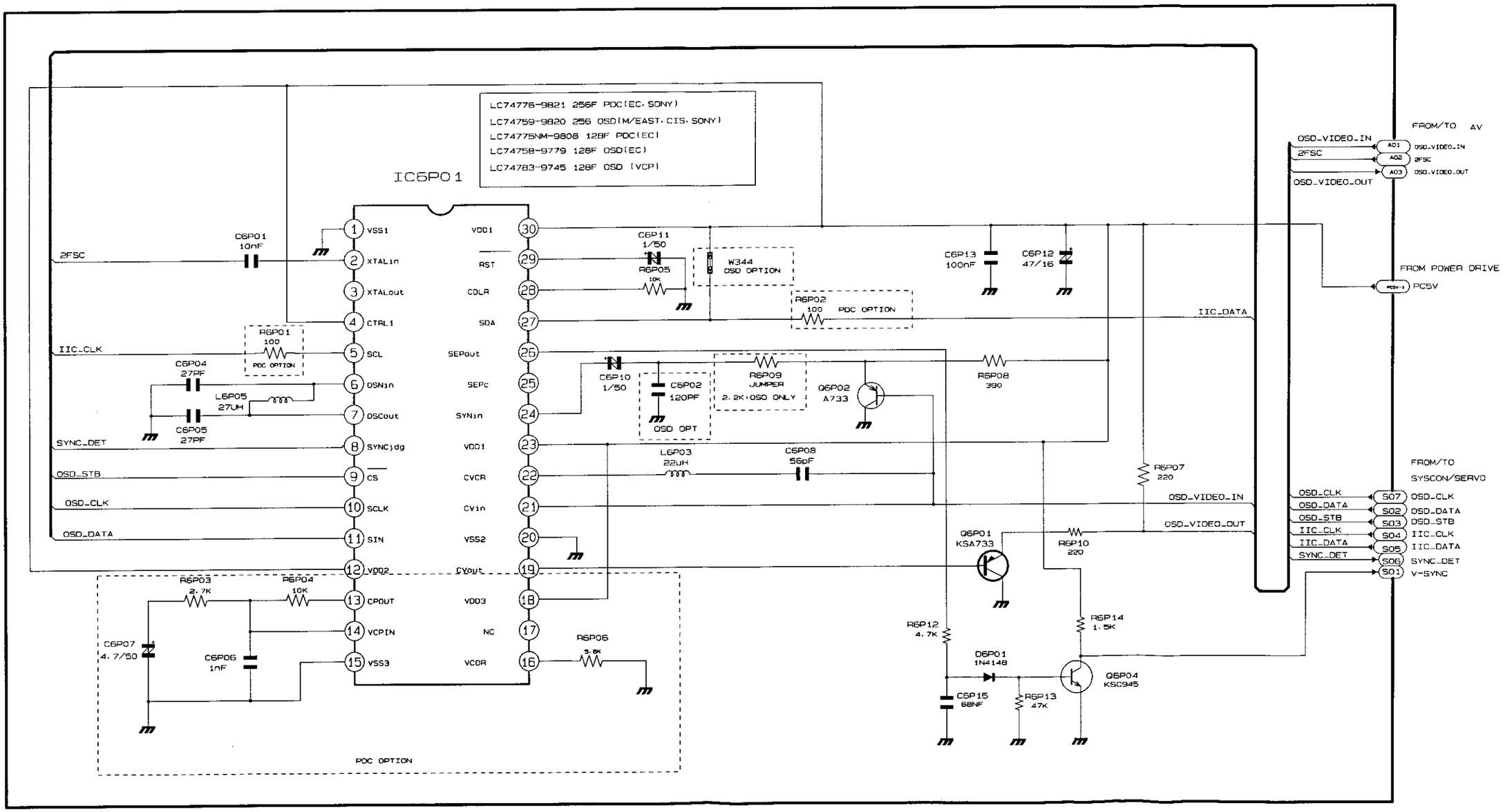
LC74776-9821 256F PDC(EC·SONY)
LC74759-9820 256 OSD(M/EAST·CIS·SONY)
LC74775NM-9808 128F PDC(EC)
LC74758-9779 128F OSD(EC)
LC74783-9745 128F OSD (VCP)
IC6P01
1 VSS1
2 XTALin
3 XTALout
4 CTRL1
5 SCL
6 OSNin
7 OSCout
8 SYNCjdg
9 CS
10 SCLK
11 SIN
12 VDD2
13 CPOUT
14 VCPIN
15 VSS3
30 VDD1
29 RST
28 CDLR
27 SDA
25 SEPout
25 SEPc
24 SYNin
23 VDD1
22 CVCR
21 CVin
20 VSS2
19 CVout
18 VDD3
17 NC
16 VCOR
2FSC
C6P01 10nF
IIC_CLK
R6P01 100 PDC OPTION
C6P04 27PF
L6P05 27UH
C6P05 27PF
SYNC_DET
OSD_STB
OSD_CLK
OSD_DATA
R6P03 2.7K
R6P04 10K
C6P07 4.7/50
C6P06 1nF
R6P06 3.6K
PDC OPTION
C6P11 1/50
R6P05 10K
W344 OSD OPTION
R6P02 100 PDC OPTION
C6P10 1/50
C6P02 120PF
OSD OPT
R6P09 JUMPER 2.2K·OSD ONLY
Q6P02 A733
L6P03 22UH
C6P08 56pF
C6P13 100nF
C6P12 47/16
IIC_DATA
R6P08 390
R6P07 220
OSD_VIDEO_IN
OSD_VIDEO_OUT
Q6P01 KSA733
R6P10 220
R6P12 4.7K
R6P14 1.5K
D6P01 1N4148
C6P15 68NF
R6P13 47K
Q6P04 KSC945
FROM/TO AV
OSD_VIDEO_IN
2FSC
OSD_VIDEO_OUT
AO1 OSD_VIDEO_IN
AO2 2FSC
AO3 OSD_VIDEO_OUT
FROM POWER DRIVE
PC5V
FROM/TO SYSCON/SERVO
OSD_CLK
OSD_DATA
OSD_STB
IIC_CLK
IIC_DATA
SYNC_DET
S07 OSD_CLK
S02 OSD_DATA
S03 OSD_STB
S04 IIC_CLK
S05 IIC_DATA
S06 SYNC_DET
S01 V-SYNC

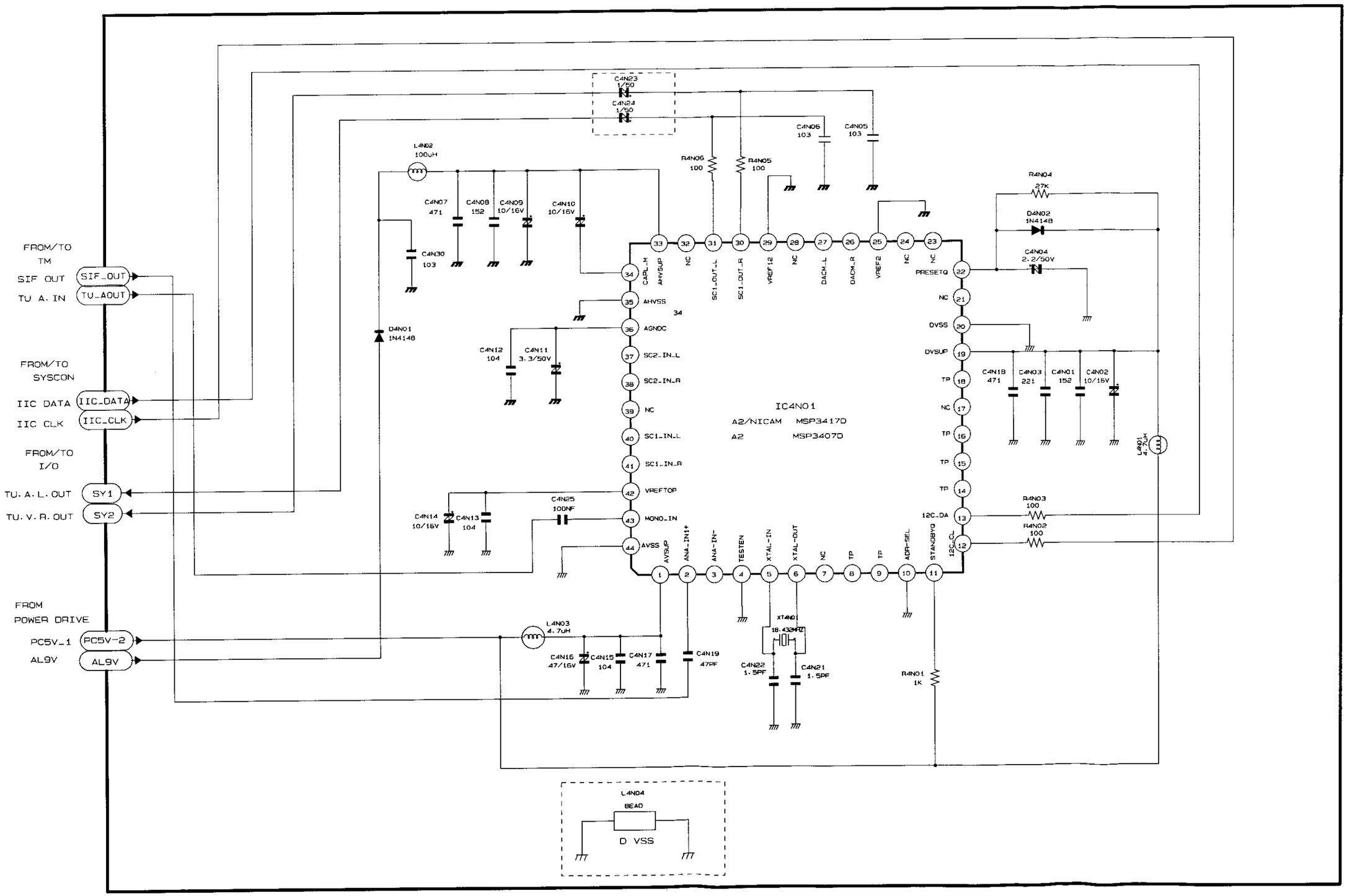
FROM/TO TM
SIF OUT
TU A. IN
SIF_OUT
TU_AOUT
FROM/TO SYSCON
IIC DATA
IIC CLK
IIC_DATA
IIC_CLK
FROM/TO I/O
TU. A. L. OUT
TU. V. R. OUT
SY1
SY2
FROM POWER DRIVE
PC5V_1
AL9V
PC5V-2
AL9V
C4N23 1/50N
C4N24 1/50N
L4N02 100UH
R4N06 100
R4N05 100
C4N06 103
C4N05 103
C4N07 471
C4N08 152
C4N09 10/16V
C4N10 10/16V
C4N30 103
D4N01 1N4148
C4N12 104
C4N11 3.3/50V
C4N14 10/16V
C4N13 104
C4N25 100NF
L4N03 4.7uH
C4N16 47/16V
C4N15 104
C4N17 471
C4N19 47PF
C4N22 1.5PF
C4N21 1.5PF
XT4N01 18.432MHZ
R4N01 1K
R4N04 27K
D4N02 1N4148
C4N04 2.2/50V
C4N18 471
C4N03 221
C4N01 152
C4N02 10/16V
L4N01 4.7uH
R4N03 100
R4N02 100
IC4N01
A2/NICAM MSP3417D
A2 MSP3407D
CAPL_M
AHVSUP
NC
SC1_OUT_L
SC1_OUT_R
VREF12
NC
DACM_L
DACM_R
VREF2
NC
NC
PRESETQ
AHVSS
AGNDC
SC2_IN_L
SC2_IN_R
NC
SC1_IN_L
SC1_IN_R
VREFTOP
MONO_IN
AVSS
AVSUP
ANA_IN1+
ANA_IN-
TESTEN
XTAL_IN
XTAL_OUT
NC
TP
TP
ADR_SEL
STANDBYQ
I2C_CL
I2C_DA
DVSS
DVSUP
TP
NC
TP
TP
TP
L4N04
BEAD
D VSS

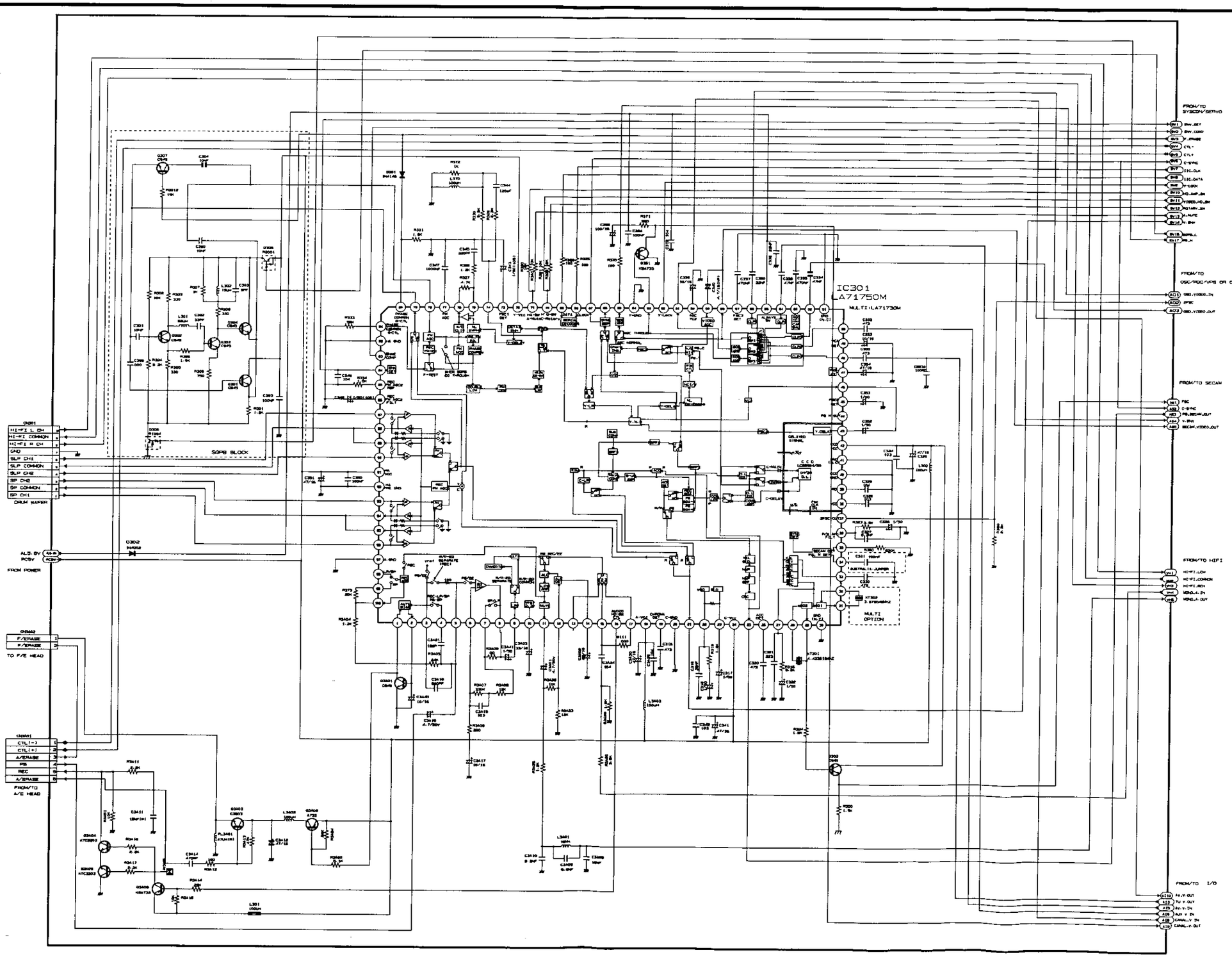
IC301
LA71750M
MULTI:LA71730M
SOPS BLOCK
DRUM WAFER
FROM POWER
TO F/E HEAD
F/ERASE
R/ERASE
CTL(-)
CTL(+)
A/ERASE
PB
REC
A/ERASE
FROM/TO A/E HEAD
FROM/TO SYSCON/SERVO
FROM/TO OSC/PROC/VPS OR OSD
FROM/TO SECAM
FROM/TO HIFI
FROM/TO I/O
MULTI OPTION

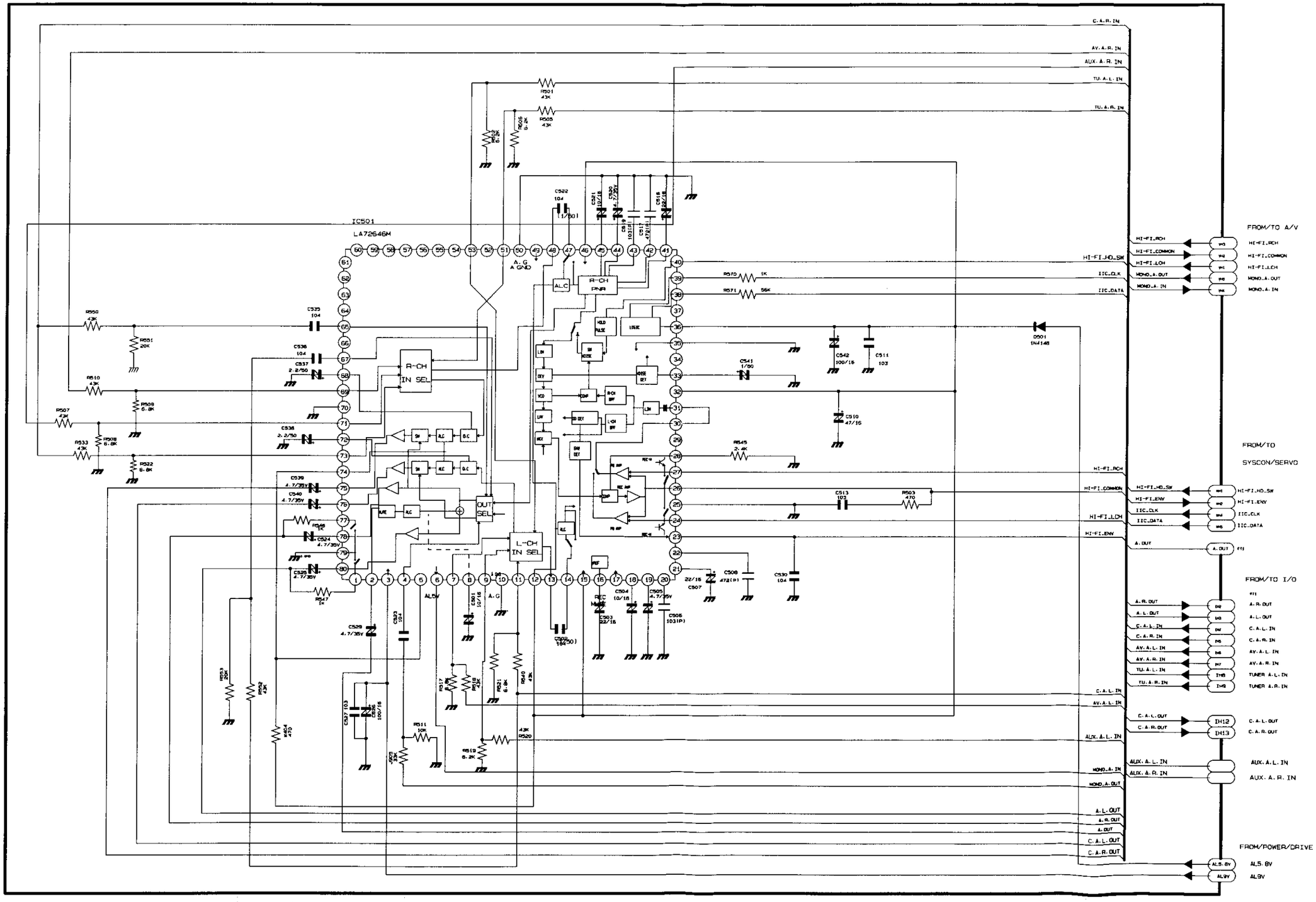
IC501
LA72646M
R-CH IN SEL
L-CH IN SEL
OUT SEL
R-CH PNR
ALC
FROM/TO A/V
FROM/TO SYSCON/SERVO
FROM/TO I/O
FROM/POWER/DRIVE
HI-FI.RCH
HI-FI.COMMON
HI-FI.LCH
MONO.A.OUT
MONO.A.IN
HI-FI.HD.SW
IIC.CLK
IIC.DATA
HI-FI.ENV
A.OUT
A.R.OUT
A.L.OUT
C.A.L.IN
C.A.R.IN
AV.A.L.IN
AV.A.R.IN
TU.A.L.IN
TU.A.R.IN
TUNER A.L.IN
TUNER A.R.IN
C.A.L.OUT
C.A.R.OUT
AUX.A.L.IN
AUX.A.R.IN
A.L.OUT
A.R.OUT
C.A.L.OUT
C.A.R.OUT
AL5.8V
AL9V

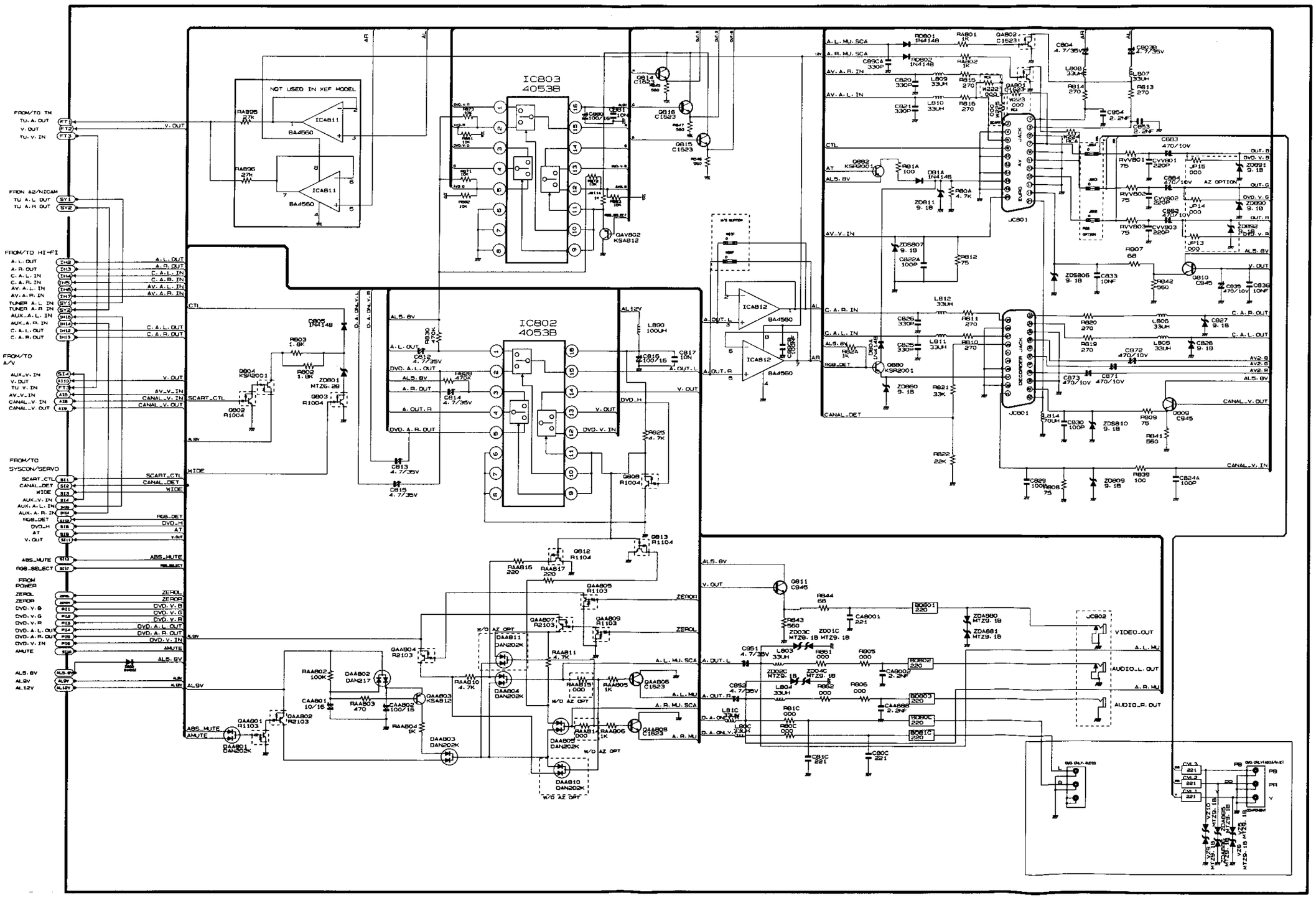
IC803
4053B
IC802
4053B
IC801
NOT USED IN XEF MODEL
FROM/TO TM
FROM/TO HI-FI
FROM/TO A/V
FROM/TO SYSCON/SERVO
FROM POWER
JC801
JC802
VIDEO_OUT
AUDIO_L_OUT
AUDIO_R_OUT
SCART_CTL
CANAL_DET
WIDE
ABS_MUTE
RGB_SELECT
ZEROL
ZEROR
AMUTE
AL5.8V
AL9V
AL12V
CTL
CANAL_V. OUT
CANAL_V. IN
W/O AZ OPT
AZ OPTION

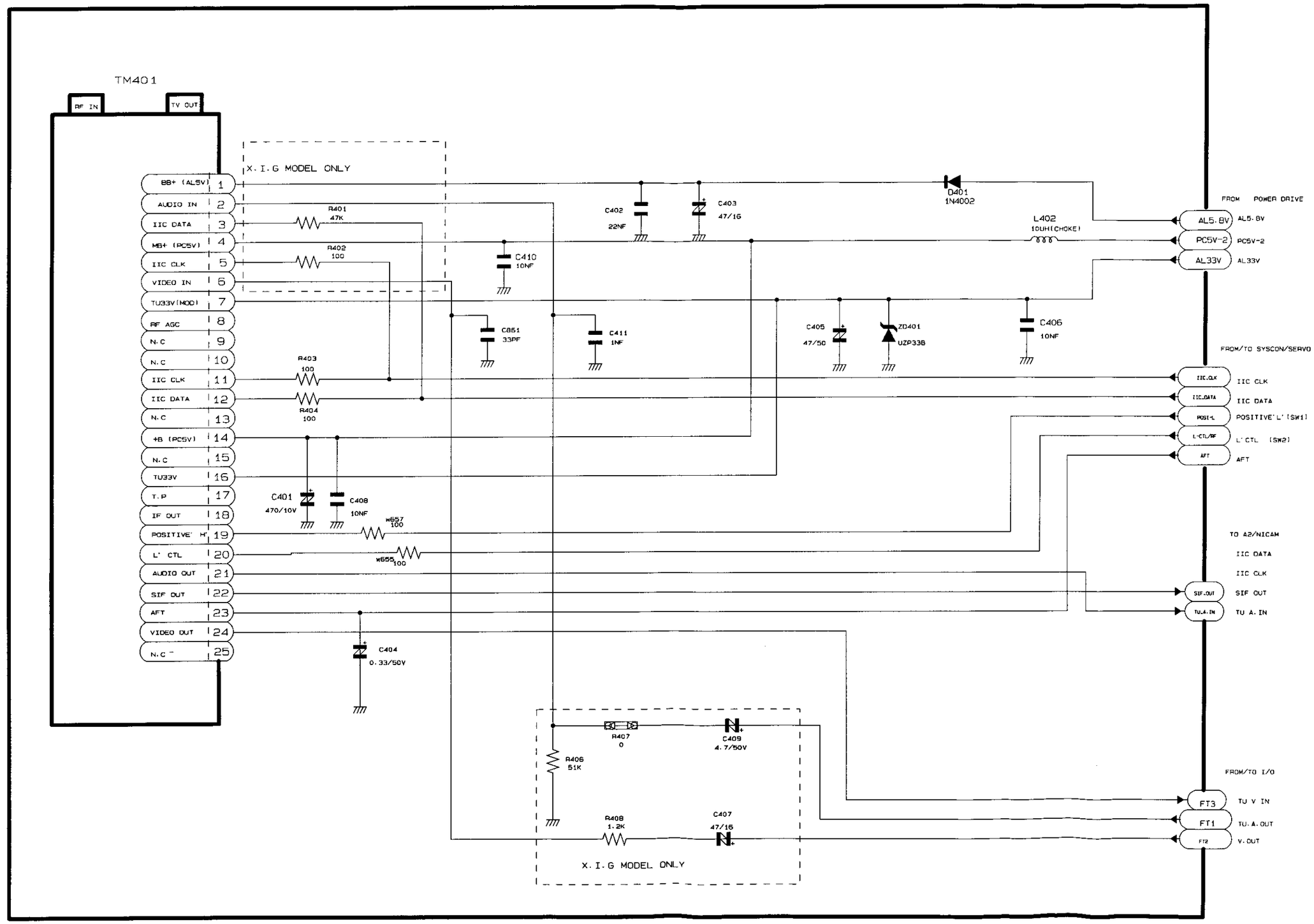
TM401
RF IN
TV OUT
X.I.G MODEL ONLY
BB+ (AL5V) 1
AUDIO IN 2
IIC DATA 3
MB+ (PC5V) 4
IIC CLK 5
VIDEO IN 6
TU33V(MOD) 7
RF AGC 8
N.C 9
N.C 10
IIC CLK 11
IIC DATA 12
N.C 13
+B (PC5V) 14
N.C 15
TU33V 16
T.P 17
IF OUT 18
POSITIVE 'H' 19
L' CTL 20
AUDIO OUT 21
SIF OUT 22
AFT 23
VIDEO OUT 24
N.C 25
R401 47K
R402 100
R403 100
R404 100
C401 470/10V
C408 10NF
W657 100
W655 100
C404 0.33/50V
C410 10NF
C851 33PF
C411 1NF
C402 22NF
C403 47/16
D401 1N4002
L402 10UH(CHOKE)
C405 47/50
ZD401 UZP33B
C406 10NF
R407 0
C409 4.7/50V
R406 51K
R408 1.2K
C407 47/16
X.I.G MODEL ONLY
FROM POWER DRIVE
AL5.8V AL5.8V
PC5V-2 PC5V-2
AL33V AL33V
FROM/TO SYSCON/SERVO
IIC.CLK IIC CLK
IIC.DATA IIC DATA
POSI-L POSITIVE 'L' (SW1)
L-CTL/RF L' CTL (SW2)
AFT AFT
TO A2/NICAM
IIC DATA
IIC CLK
SIF.OUT SIF OUT
TU.A.IN TU A. IN
FROM/TO I/O
FT3 TU V IN
FT1 TU. A. OUT
FT2 V. OUT

5-9 SYSCON

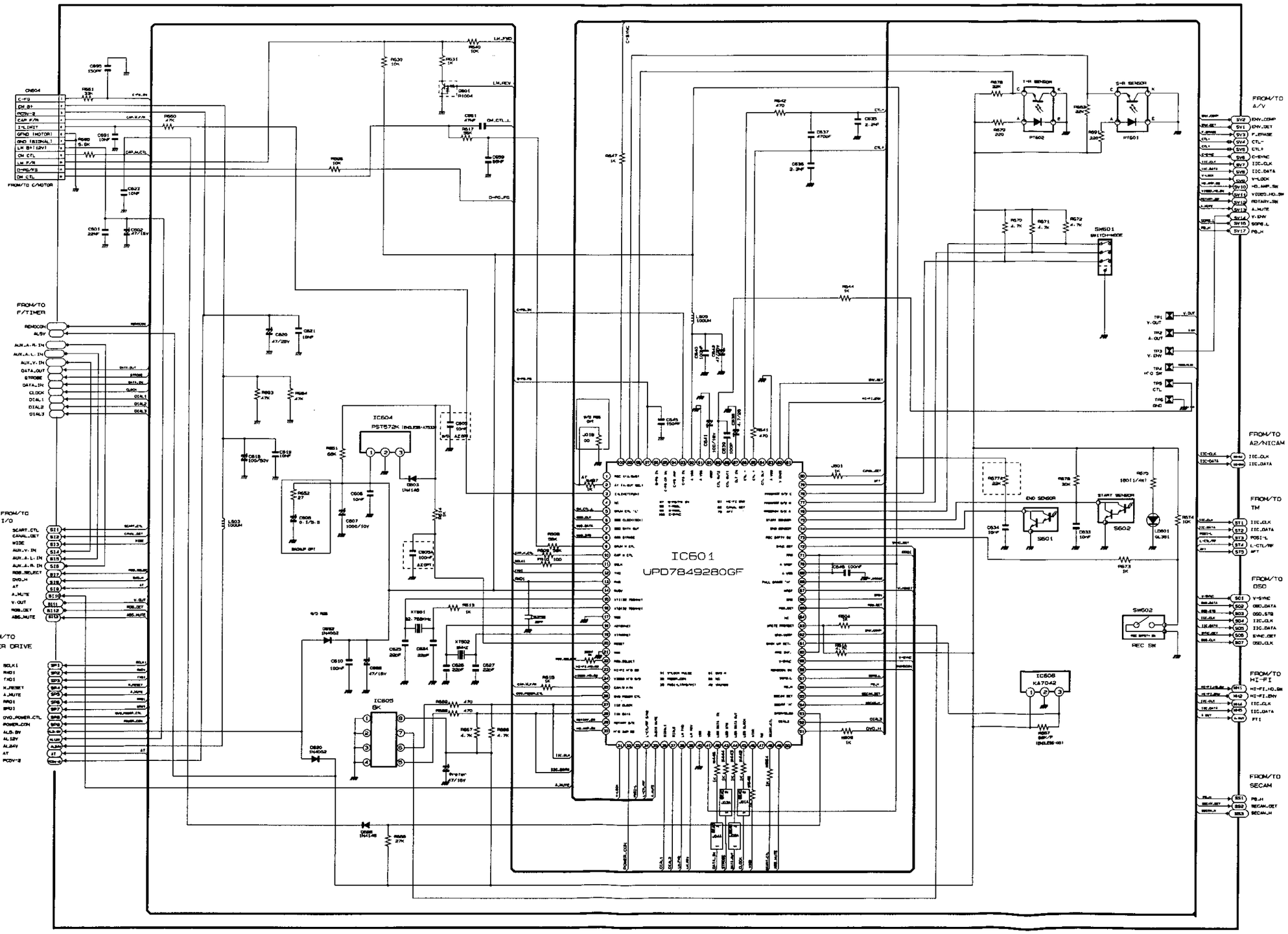

IC601
UPD7849280GF
IC604
PST572K
IC605
8K
IC606
KA7042
SW601
SWITCH-MODE
SW602
REC SW
FROM/TO C/MOTOR
FROM/TO F/TIMER
FROM/TO I/O
FROM/TO POWER DRIVE
FROM/TO A/V
FROM/TO A2/NICAM
FROM/TO TM
FROM/TO OSD
FROM/TO HI-FI
FROM/TO SECAM

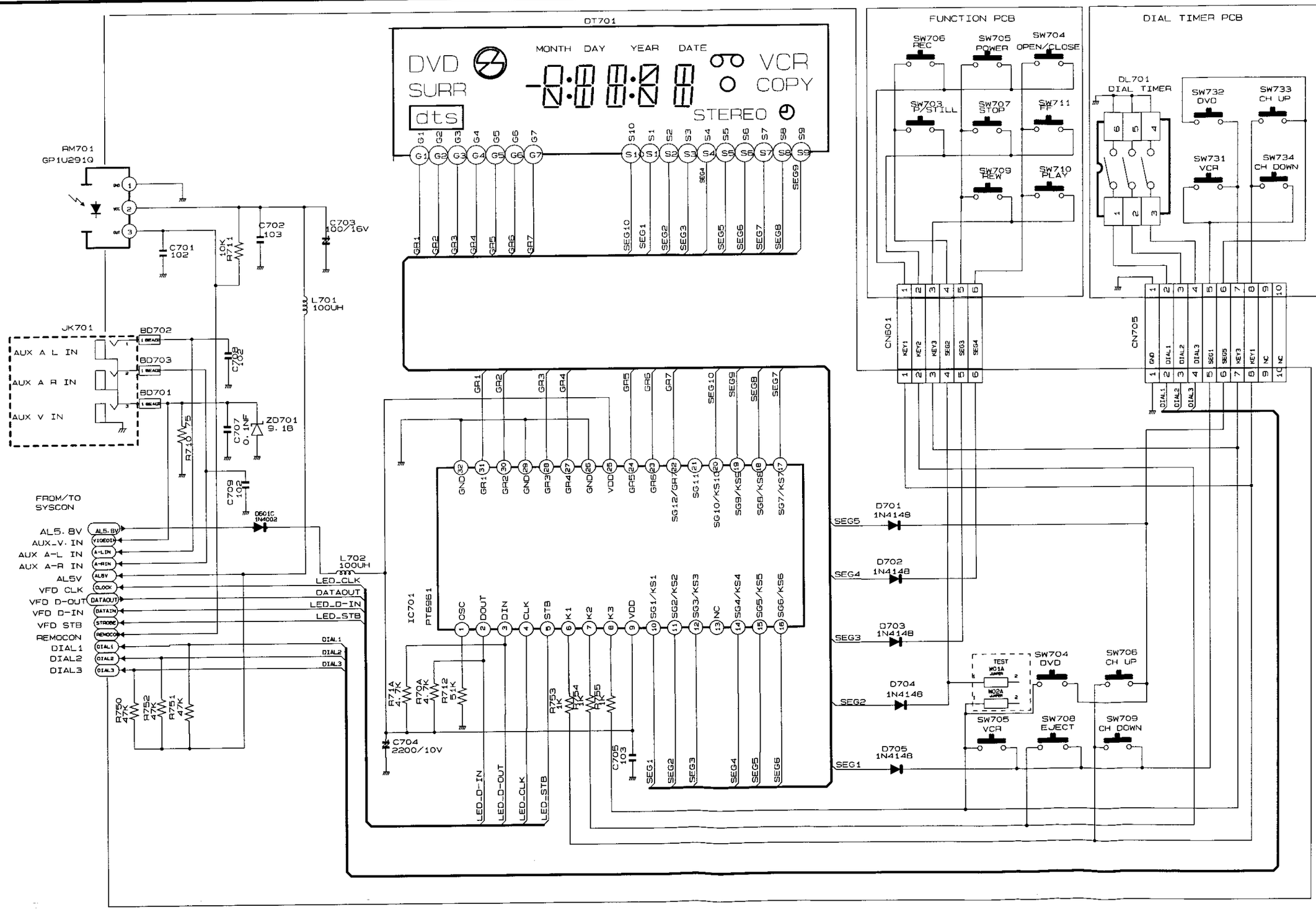
DT701
DVD
SURR
dts
MONTH DAY YEAR DATE
VCR
COPY
STEREO
FUNCTION PCB
SW706 REC
SW705 POWER
SW704 OPEN/CLOSE
SW703 PAUSE/STILL
SW707 STOP
SW711 FF
SW709 REW
SW710 PLAY
DIAL TIMER PCB
DL701 DIAL TIMER
SW732 DVD
SW733 CH UP
SW731 VCR
SW734 CH DOWN
RM701 GP1U291Q
C701 102
C702 103
C703 100/16V
10K R711
L701 100UH
JK701
AUX A L IN
AUX A R IN
AUX V IN
BD702
BD703
BD701
C708 102
C707 0.1NF
ZD701 9.1B
R710 75
C709 102
D501C 1N4002
FROM/TO SYSCON
AL5.8V
AUX_V.IN
AUX A-L IN
AUX A-R IN
AL5V
VFD CLK
VFD D-OUT
VFD D-IN
VFD STB
REMOCON
DIAL1
DIAL2
DIAL3
L702 100UH
LED_CLK
DATAOUT
LED_D-IN
LED_STB
R750 47K
R752 47K
R751 47K
IC701 PT6961
R71A 4.7K
R70A 4.7K
R712 5.1K
R753 1K
R754 1K
R755 1K
C704 2200/10V
C705 103
CN501
CN705
D701 1N4148
D702 1N4148
D703 1N4148
D704 1N4148
D705 1N4148
TEST
W01A
W02A
SW704 DVD
SW706 CH UP
SW705 VCR
SW708 EJECT
SW709 CH DOWN

5-11 SECAM (SLV-D950B/D910B/D910R Only)

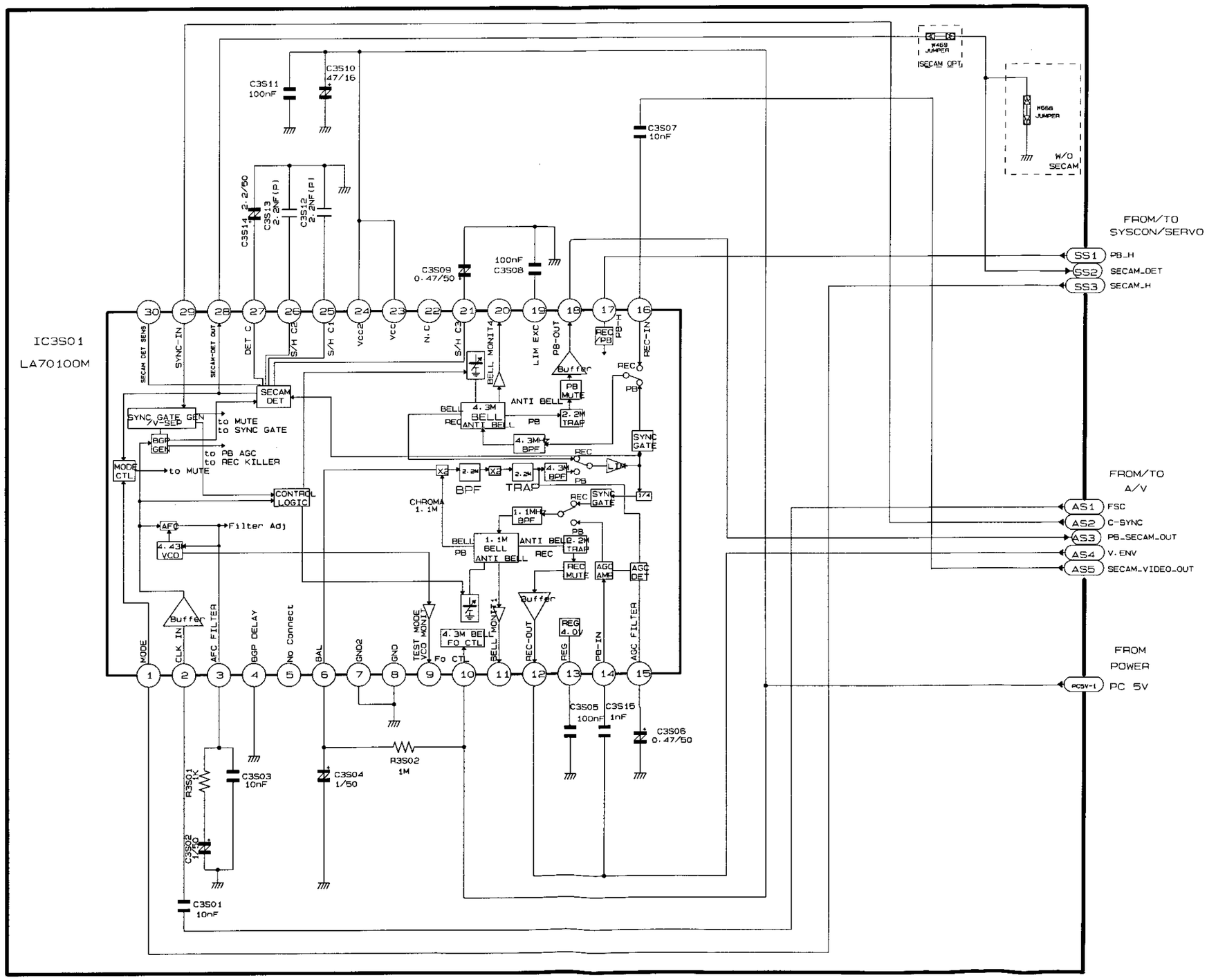

5-12 DVD MAIN-MICOM/AV DECODER

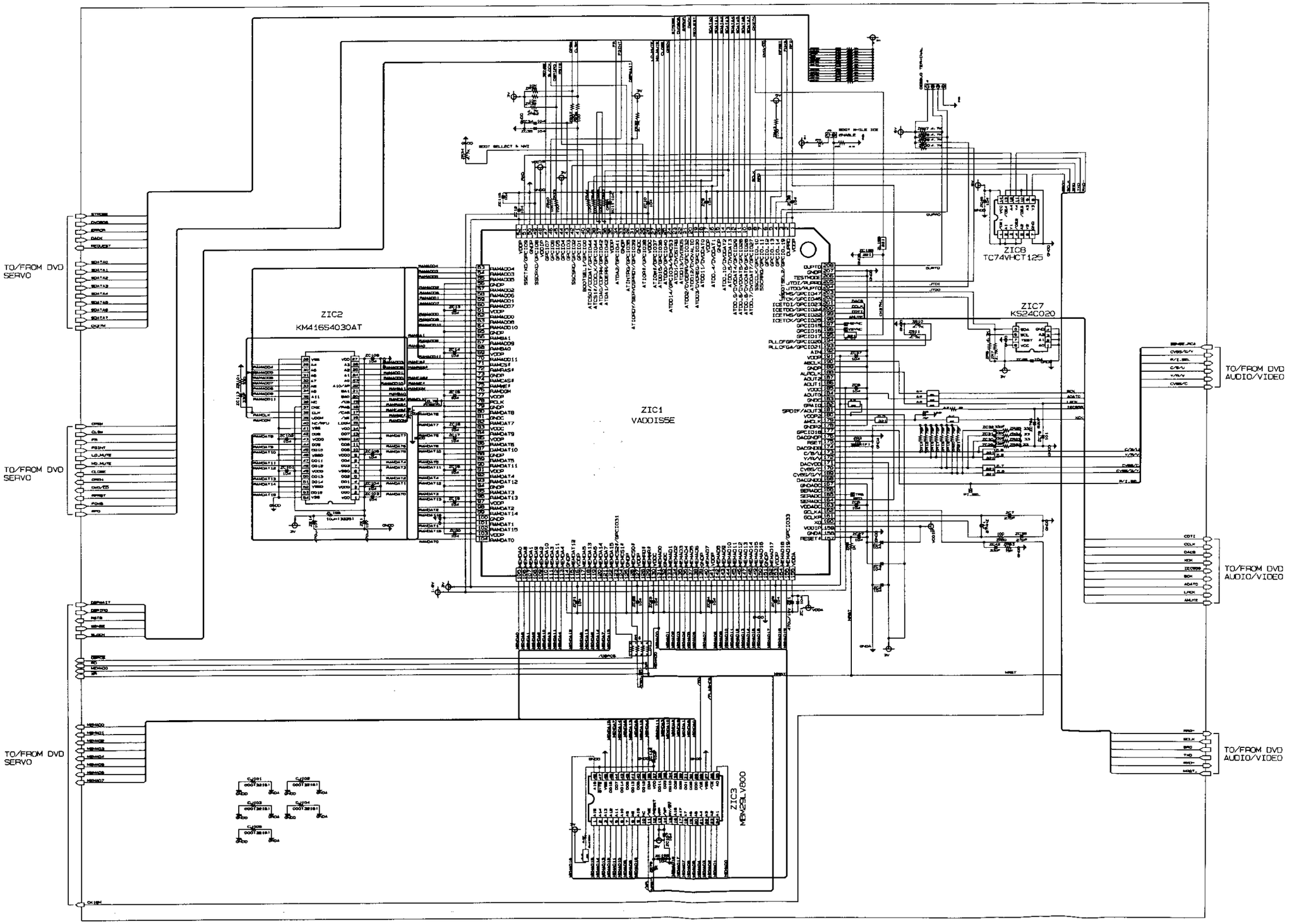

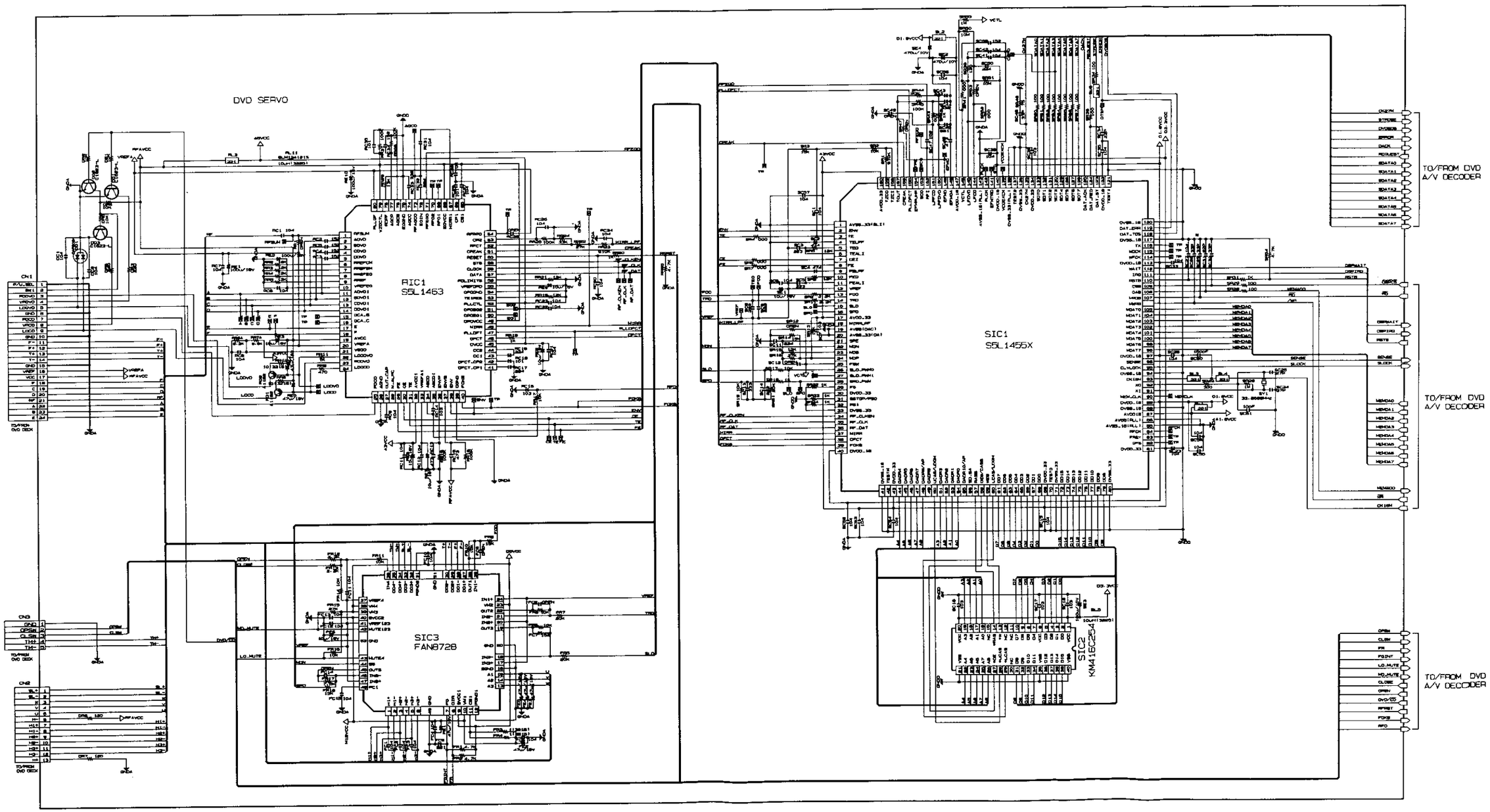
DVD SERVO
RIC1
S5L1463
SIC1
S5L1455X
SIC3
FAN8728
SIC2
KM416C254
TO/FROM DVD
A/V DECODER
TO/FROM DVD
A/V DECODER
TO/FROM DVD
A/V DECODER

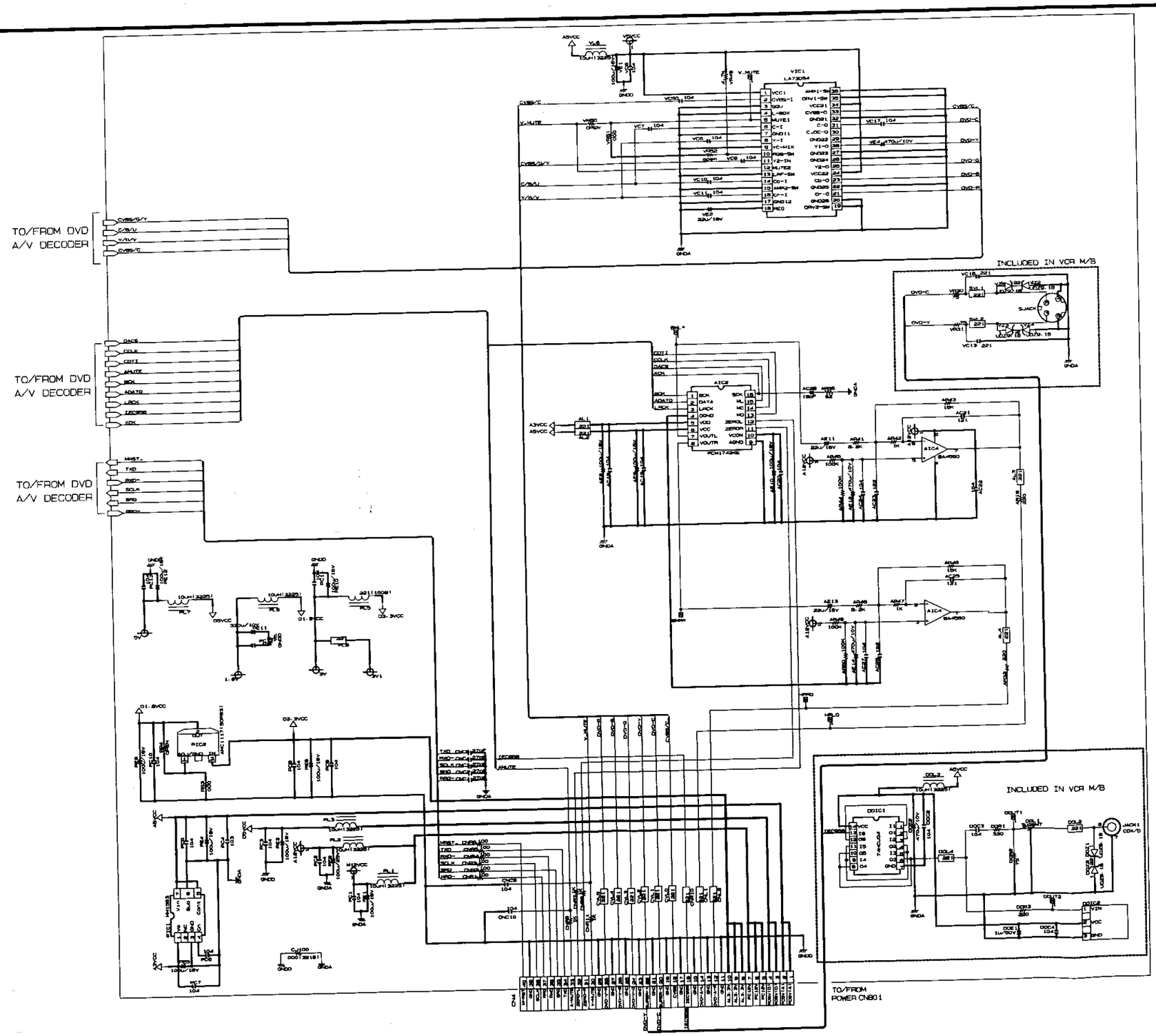
TO/FROM DVD
A/V DECODER
TO/FROM DVD
A/V DECODER
TO/FROM DVD
A/V DECODER
INCLUDED IN VCR M/B
INCLUDED IN VCR M/B
TO/FROM
POWER CN801

6. ALIGNMENT AND ADJUSTMENTS

6-1 VCR ADJUSTMENT

6-1-1 Reference

1) X-Point (Tracking center) adjustment, "Head switching adjustment" and "NVRAM option setting" can be adjusted with remote control.
2) When replacing the Main PCB Micom (IC601) and NVRAM (IC605; EEPROM) be sure to adjust the "Head switching adjustment" and "NVRAM option setting".
3) When replacing the cylinder ass'y, be sure to adjust the "X-Point" and "Head switching adjustment".
4) How to adjustment.
   - Intermittently short circuit the Test Point on Main PCB with pincers to the adjustment mode.
   - If the corresponding adjustment button is pressed, the adjustment is performed automatically.
   - If the adjustment is completed, be sure to turn the power off.

6-1-1(a) Location of adjustment button of remote control

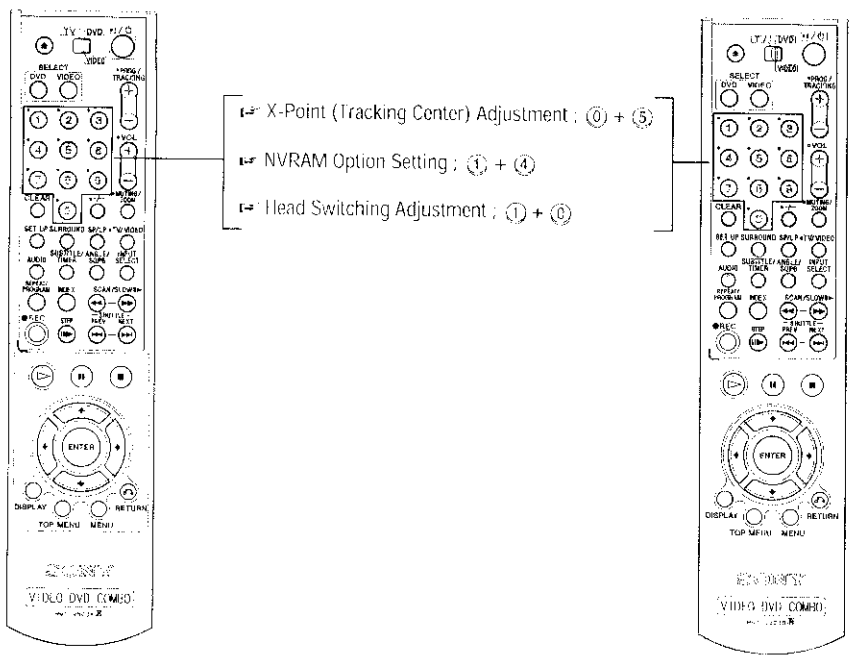

Fig. 6-1

6-1-1(b) TEST location for adjustment mode setting

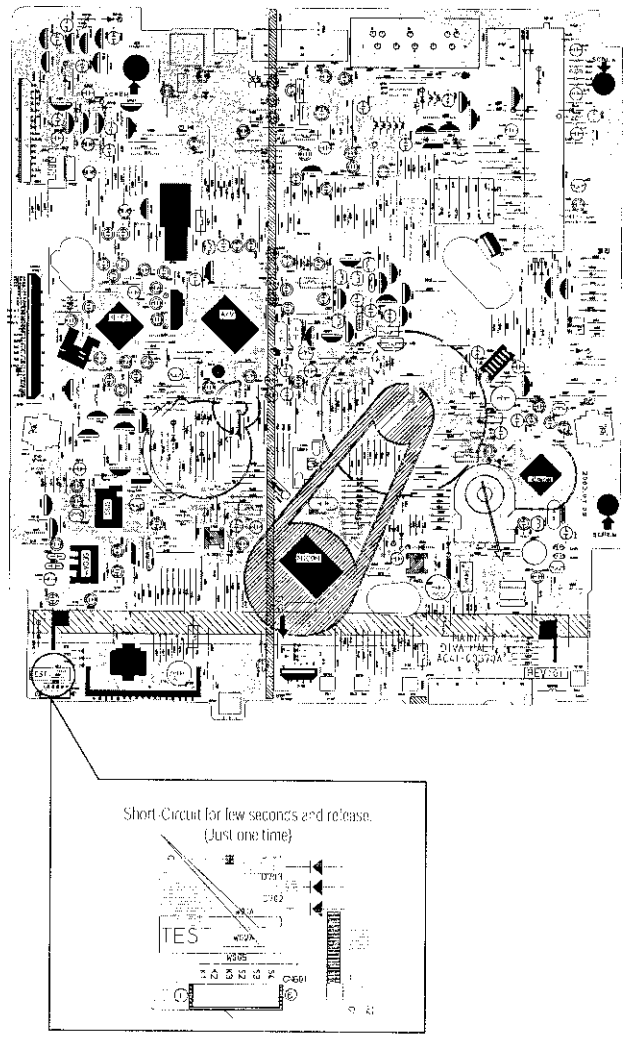

Fig. 6-2 VCR Main PCB (Top View)

6-1-2 Head Switching Point Adjustment

1) Playback the alignment tape.
2) Intermittently short-circuit the two Test Points on VCR Main PCB while setting the adjustment mode. (See Fig. 6-2)
3) Press the "1, 9" buttons : remote control adjustment operates automatically. (See Fig. 6-1)

6-1-3 NVRAM Option Setting

1) NVRAM Option is adjusted in the factory.
2) In case Main PCB M-com (IC600) and NVRAM (IC605 ; EEPROM) are replaced, be sure to set the corresponding option number of the required model. (If the option is not set, the Unit will operate.)

1) Intermittently short-circuit the two Test Points on VCR Main PCB. (See Fig. 6-2)
2) Press the "1, 9" buttons on the remote control. The option setting is appears. (See Fig. 6-3)
3) Select the option number (See Table 6-1) of corresponding model with "◀, ▶, ▲, ▼" buttons on the remote control.
4) After selecting the option number is completed, press the "ENTER" button of remote control.
(If "ENTER" button is pressed, the selected number is changes color. ; See Fig. 6-4)
5) Press the "RETURN" button of remote control again to store the option number.
6) Turn the Power off.

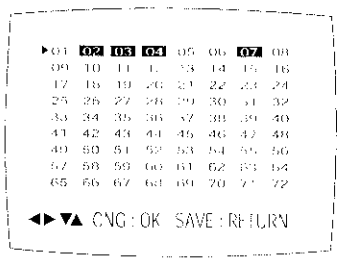

Fig. 6-3

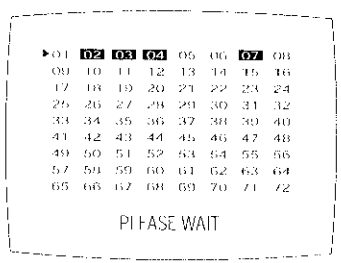

Fig. 6-4

<Table 6-1 NVRAM Option Table>

MODEL	OPTION NUMBERS
SLV-D950P	2, 4, 5, 6, 7, 8, 9, 10, 11, 12, 13, 15, 32, 34, 35, 38, 40, 42, 45, 47, 60, 61, 63, 64, 69, 70, 72
SLV-D1013P	4, 5, 6, 7, 8, 9, 10, 11, 12, 13, 15, 32, 34, 35, 38, 40, 42, 45, 47, 60, 61, 63, 69, 70, 72
SLV-D950G	2, 4, 5, 6, 7, 8, 9, 10, 11, 12, 13, 15, 20, 21, 26, 32, 33, 34, 35, 36, 38, 40, 45, 47, 60, 61, 63, 64, 69, 70, 72
SLV-D960G	4, 5, 6, 7, 8, 9, 10, 11, 12, 13, 15, 20, 21, 26, 32, 33, 34, 35, 36, 38, 40, 45, 47, 60, 61, 63, 69, 70, 72
SLV-D950GI	2, 4, 5, 6, 8, 9, 10, 11, 12, 13, 15, 25, 26, 32, 33, 34, 35, 38, 40, 41, 45, 47, 60, 61, 63, 64, 69, 70
SLV-D910N	1, 5, 6, 7, 8, 9, 10, 11, 12, 13, 15, 20, 32, 36, 38, 42, 45, 47, 60, 61, 63, 69, 70, 72
SLV-D910G	6, 7, 8, 9, 10, 11, 12, 13, 15, 20, 32, 36, 37, 39, 42, 45, 47, 60, 61, 63, 69, 70
SLV-D910GA	5, 7, 8, 9, 10, 12, 15, 25, 26, 27, 32, 33, 35, 36, 39, 42, 45, 47, 53, 60, 61, 63, 64, 70

6-2 DVD ADJUSTMENT

6-2-1 Location of Test Point

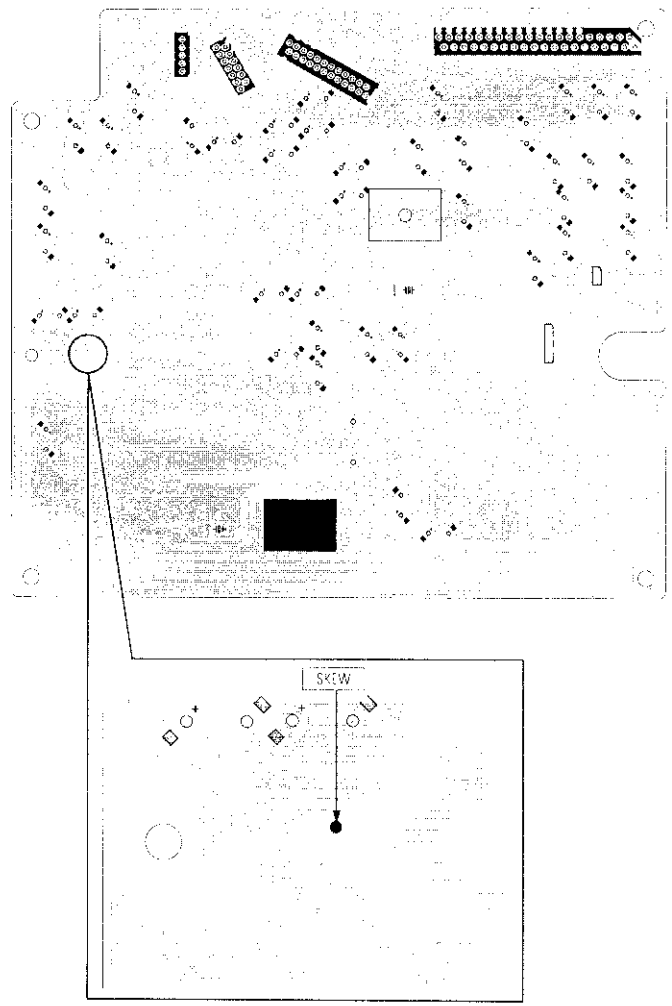

Fig. 6-5 Location of test Point (DVD Main PCB - Bottom Side)

6-2-2 Skew Adjustment

6-2-2(a) Adjustment Spec. and Test Point

< Table 6-2 >

Test Disc	Adjustment Spec.	Test Point	Adjustment Location
TDV-533 Chapter 14 (P/N: J-6090-135-A)	Flat Waveform	"SKEW" (DVD Main PCB - Bottom Side) (See Fig. 6-5)	Ass'y Deck - Top Side (See Fig. 6-6)

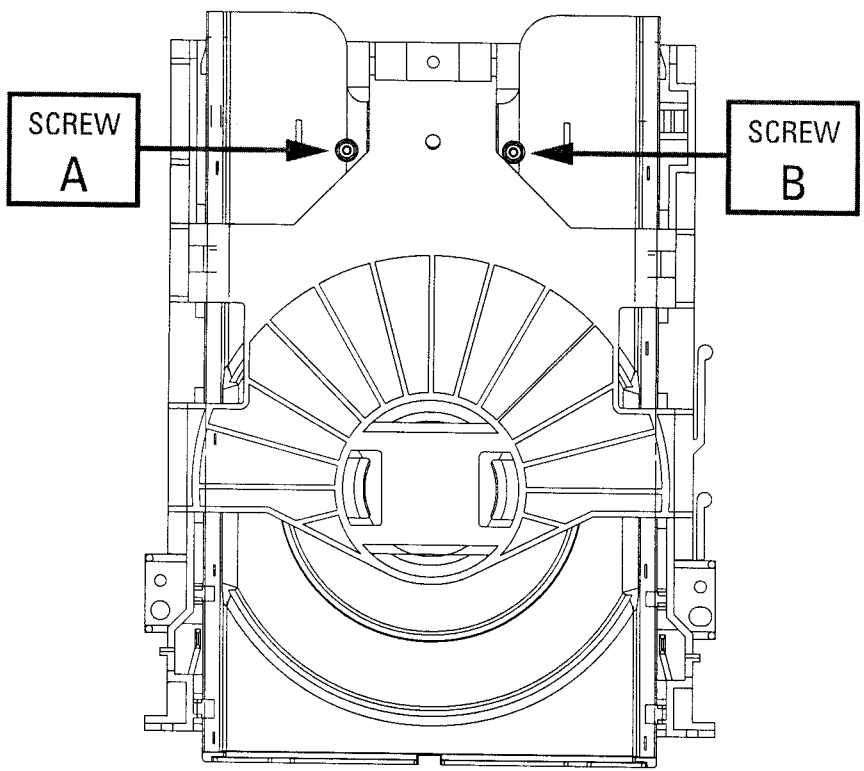

Fig. 6-6 Ass'y Deck (Top Side)

6-2-2(b) SKEW Adjustment Method

Needed to minimize the variations in Skew of the Pickup unit and to provide optimum match with the recorded signal on the Disc.

1) Connect an Oscilloscope to the "SKEW" Test Point (See Fig. 6-5).
2) Connect Power, Open the Tray and Play the TDV-533 Disc, Chapter 14.
   - ◆ Set the Oscilloscope Range as follows :
     (Voltage ; 50mV/Div., Frequency ; 10m Sec.)
3) Adjust the Screws "A" and "B" (See Fig. 6-6) using a Hex screwdriver until you obtain a Flat Waveform and the picture is stable.
   Then, go to Chapter 1 and make sure the Waveform is Flat here as well.
   If not, you have to go back to Chapter 14 and adjust again.
   If you cannot obtain a Flat waveform, then the unit is defective.

Note: The Deck must be in a horizontal position. Use both "A" and "B" screws to adjust.

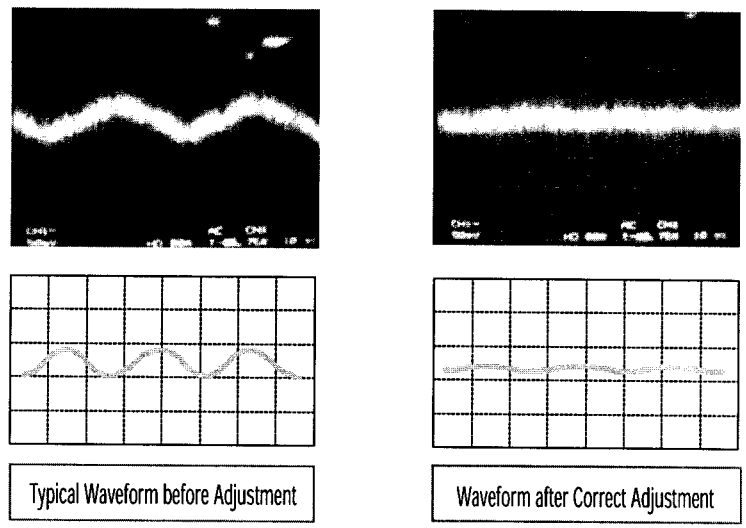

Fig. 6-7 Envelope Waveform

6-3 VCR MECHANICAL ADJUSTMENT

6-3-1 Tape Transport System and Adjustment Locations

The tape transport system has been adjusted precisely in the factory. Alignment is not necessary except for the following :

1) Noise observed on the screen.
2) Tape damage.
3) Parts replacement in the tape transport system.

Lower flange height of tape guide is used as the reference for the transport adjustment.
To maintain the height of the tape guide and prevent damage, do not apply excessive force onto the main base.

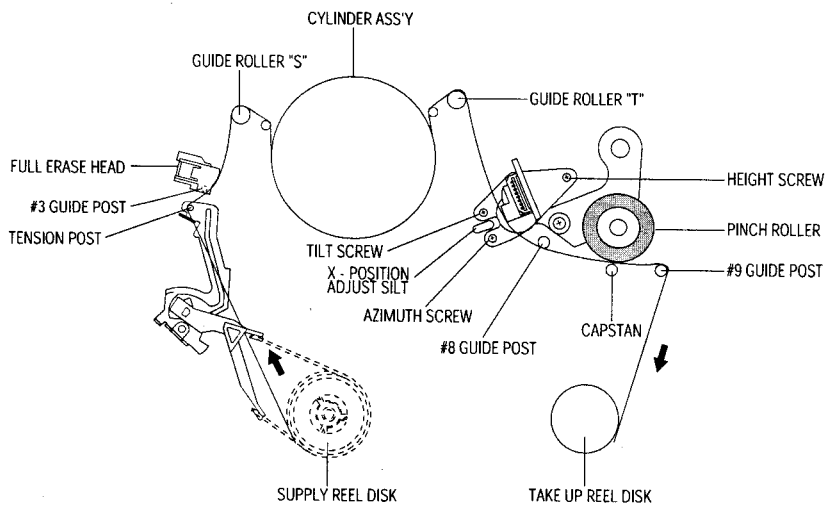

Fig. 6-8 Location of Tape Transport Adjustment

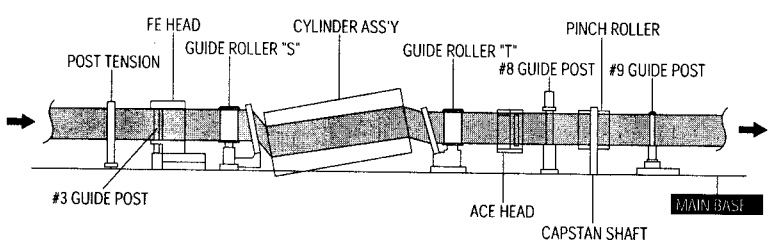

Fig. 6-9 Tape Travel Diagram

6-3-2 Tape Transport System Adjustment

When parts are replaced, perform the required adjustments by referring to procedures for the tape transport system. If there are any changes to the tape path, first run a T-120 tape and make sure excessive tape wrinkle does not occur at the tape guides.

◆ If tape wrinkle is observed at the guide roller S, T, turn the guide roller S, T until wrinkle disappears.
◆ If the tape wrinkle is still observed at the tape guide, perform the tilt adjustment of the ACE head.

(1) ACE Head Assembly Adjustment

a. ACE HEAD HEIGHT ADJUSTMENT

1) Run the alignment tape (Color bar) in the playback mode.
2) Observe surface of the audio head using a dental mirror.
3) Turn screw (C) clockwise or counterclockwise until the gap of lower tape edge and the lower edge of the control head is about 0.25mm. (Refer to Fig. 6-10 and 6-11)

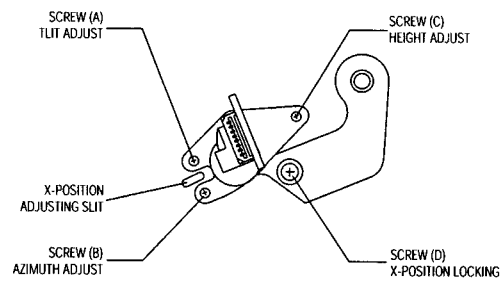

Fig. 6-10 Location of ACE Head Adjustment Screw

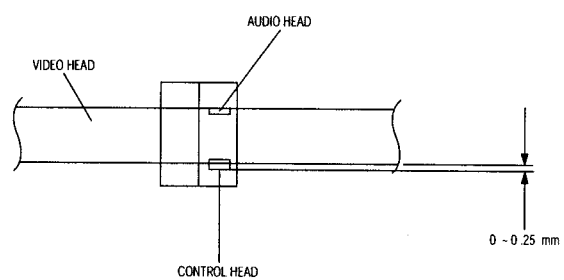

Fig. 6-11 ACE Head Height Adjustment

b. ACE HEAD TILT ADJUSTMENT

1) Playback a blank tape and observe the position of the tape at the lower flange of tape guide.
2) Confirm that there is no curl or wrinkle at the lower flange of tape guide as shown in Fig. 6-12 (B).
3) If a curl or wrinkle of the tape occurs, slightly turn the screw (A) tilt adjust on the ACE head ass'y.
4) Reconfirm the ACE head height.

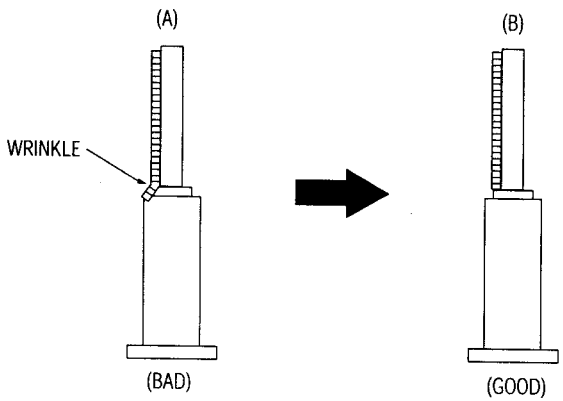

Fig. 6-12 Tape Guide Check

c. AUDIO AZIMUTH ADJUSTMENT

1) Load alignment tape (Mono scope) and playback the 6KHz signal.
2) Connect channel-1 scope probe to audio output.
3) Adjust screw (B) to achieve maximum audio level. (See Fig. 6-10)

d. ACE HEAD POSITION (X-POINT) ADJUSTMENT

1) Playback the alignment tape (Color bar)
2) Intermittently short-circuit the two Test Points on VCR Main PCB . (See Fig. 6-2)
3) Press the "0, 5" remote control buttons, then adjustment is operates automatically. (See Fig. 6-1)
4) Connect the CH-1 probe to "Envelope" the CH-2 probe to "H'D switching pulse" and then trigger to CH-1.
5) Insert the (-) driver into the X-Point adjustment hole and adjust it so that envelope waveform is maximum.

Test point: W568 (Audio Output)
W569 (Envelope)
W570 (H'D S/W -Trigger)
W571 (Control Pulse)

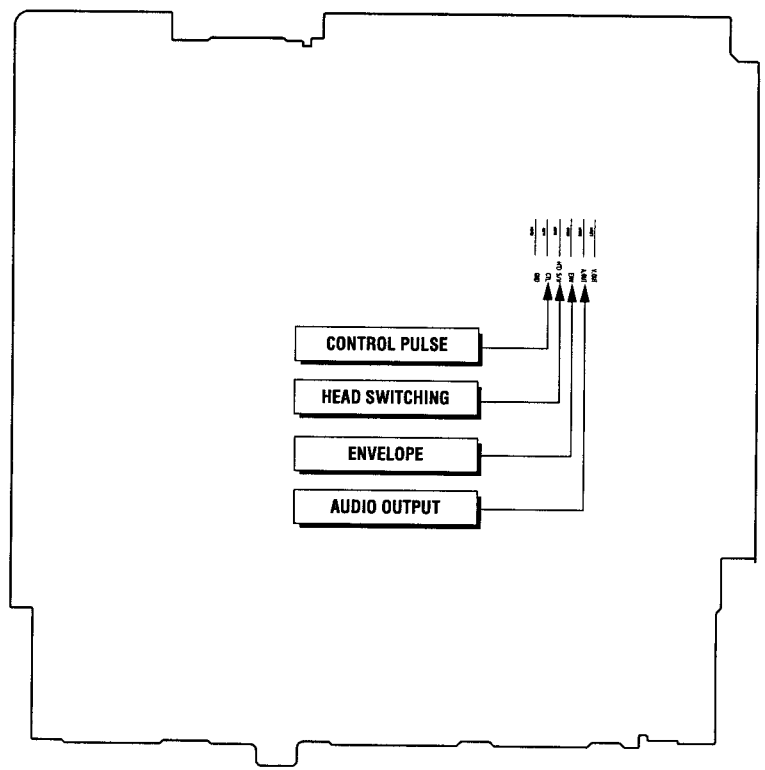

Fig. 6-13 Location of Test point (VCR Main PCB-Top View)

(2) Linearity adjustment (Guide roller S, T adjustment)

1) Playback the Mono Scope alignment tape (SP mode).
2) Observe the video envelope signal on an oscilloscope (triggered by the video switching pulse).
3) Make sure the video envelope waveform (at its minimum) meets the specification shown in Fig. 6-14.
   If it does not, adjust as follows :

Note:
a=Maximum output of the video RF envelope.
b=Minimum output of the video RF envelope at the entrance side.
c=Minimum output of the video RF envelope at the center point.
d=Maximum output of the video RF envelope at the exit side.

4) If the section A in Fig. 6-15 does not meet the specification, adjust the guide roller S up or down.
5) If the section B in Fig. 6-15 does not meet the specification, adjust the guide roller T up or down.

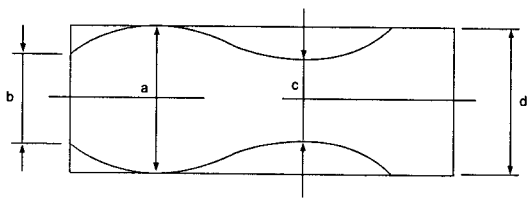

a b c d

c,b,d/a ≧ 63%

Fig. 6-14 Envelope Waveform Adjustment

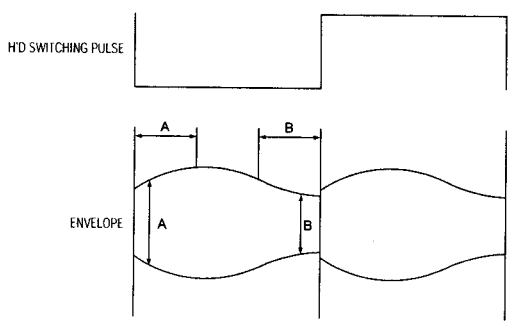

Fig. 6-15 Adjustment Points

6) Play back the Mono Scope alignment tape (SP mode).
7) Connect an oscilloscope CH-1 to the "Envelope" and CH-2 to the "H'D SW Pulse" for triggering.
8) Turn the guide roller heads with a flat head (▬) driver to obtain a flat video RF envelope as shown in Fig. 6-16.

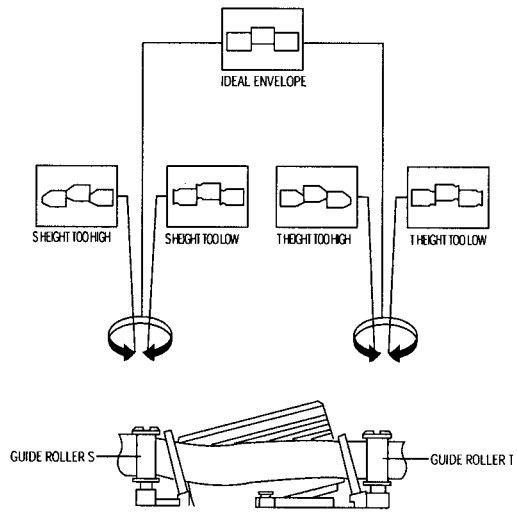

Fig. 6-16 Guide Roller S, T Height Adjustment

(3) Check Transitional Operation from RPS to Play

Check transition from RPS mode to play mode : Using a pre-recorded SP tape, make sure the entry side of envelope comes to an appropriate steady state within 3 seconds (as shown in Fig. 6-17).
If the envelope waveform does not reach specified peak-to peak amplitude within 3 seconds, adjust as follows :

1) Make sure there is no gap between the supply roller lower flange and the tape.
   If there is a gap, adjust the supply guide roller again.
2) Change operation mode from the RPS to the play mode (again) and make sure the entry side of envelope rises within 3 second.

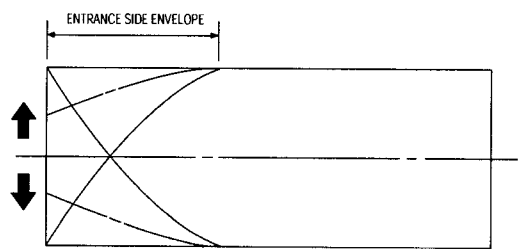

Fig. 6-17 Video Envelope Rising when Operation mode Changes from RPS to Play Mode

(4) Envelope Check

1) Make recordings on T-120 (E-120) and T-160 (E-180) tape.
   Make sure the playback output envelope meets the specification as shown in Fig. 6-18.
2) Play back a self recorded tape (recording made on the unit using with T-120 (E-120).
   The video envelope should meet the specification as shown in Fig. 6-18.
   In SP mode, (A) should equal (B).
   If the head gap is wide, upper cylinder should be checked.

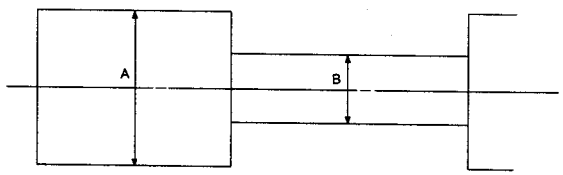

Fig. 6-18 Envelope Input and Output Level

(5) Tape Wrinkle Check

1) Run the T-160 (E-180) tape in the playback, FPS, RPS and Pause modes and observe tape wrinkle at each guide.
2) If excessive tape wrinkle is observed, perform the following adjustments in Playback mode :

- Tape wrinkle at the guide roller S, T section : Linearity adjustment.
- Tape wrinkle at tape guide flange : ACE head assembly coarse adjustment.

6-3-3 Reel Torque

1) The rotation of the capstan motor causes the holder clutch ass'y to rotate through the belt pulley.
2) The spring wrap PLAY/REV of holder clutch ass'y drives the disk reel S, T through gear idler by rotation of gear center ass'y.
3) Brake is operated by slider cam at FF/REW mode.
4) Transportation of accurate driving force is done by gears. (Gear Center Ass'y)

Note: If the spec. does not meet the followings specifications, replace the holder clutch ass'y and then recheck.

< Table 6-3 >

MODE	TORQUE g/cm	GAUGE
PB	42 ± 11	Cassette Torquemeter
RPS	145 ± 30	Cassette Torquemeter

MEMO

7. TROUBLESHOOTING

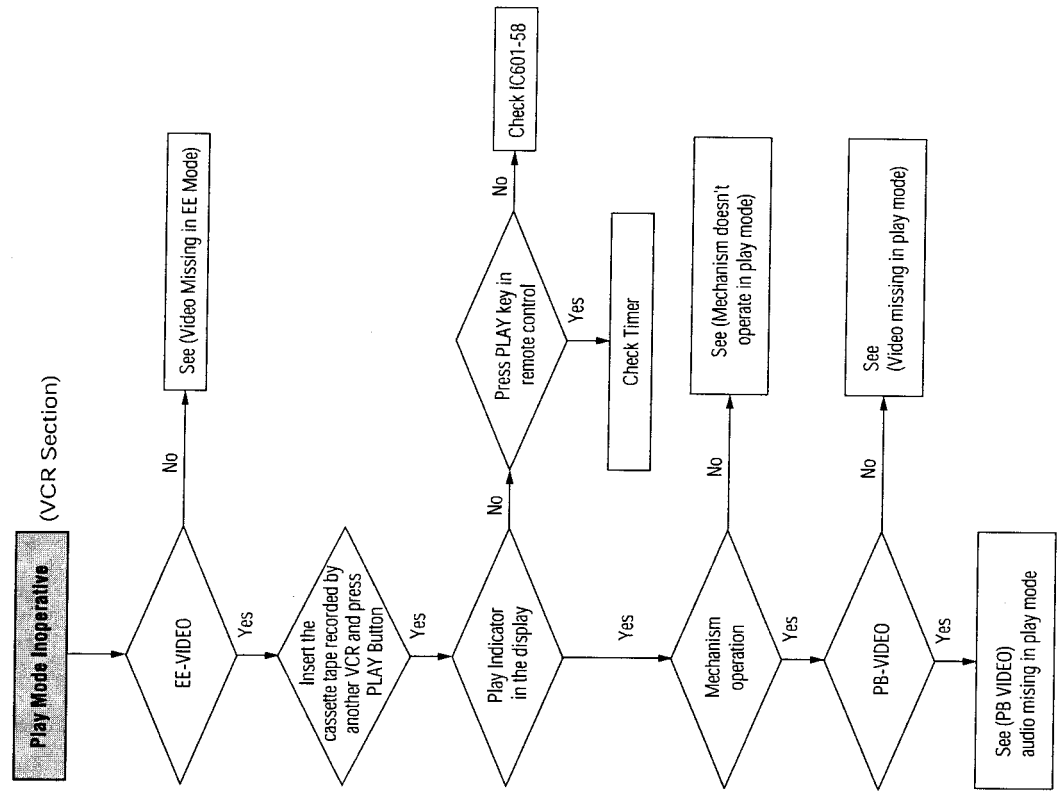

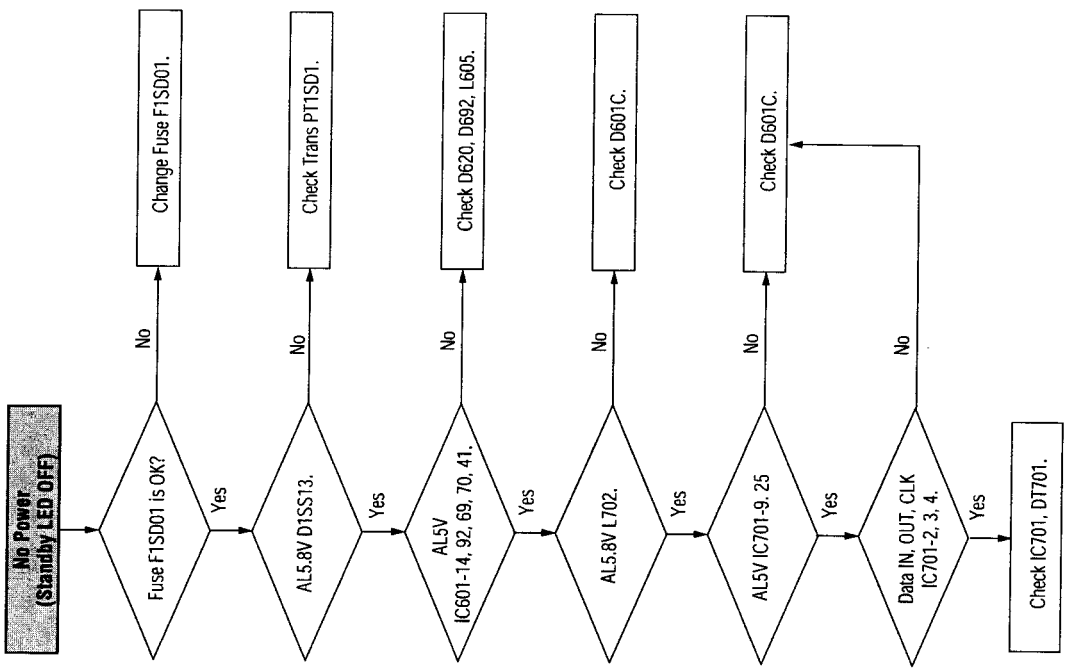

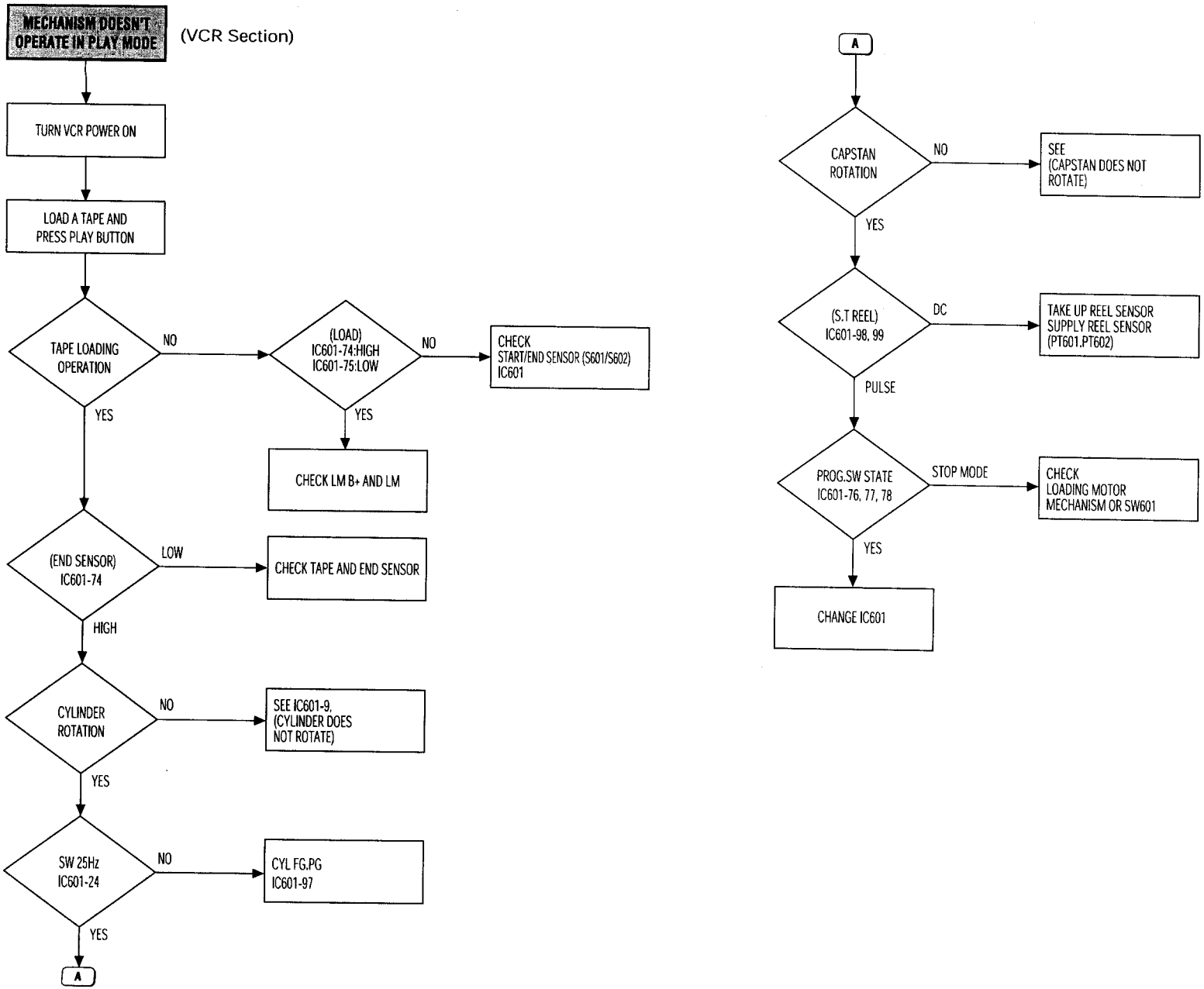
MECHANISM DOESN'T OPERATE IN PLAY MODE
(VCR Section)
TURN VCR POWER ON
LOAD A TAPE AND PRESS PLAY BUTTON
TAPE LOADING OPERATION
NO
(LOAD) IC601-74:HIGH IC601-75:LOW
NO
CHECK START/END SENSOR (S601/S602) IC601
YES
YES
CHECK LM B+ AND LM
(END SENSOR) IC601-74
LOW
CHECK TAPE AND END SENSOR
HIGH
CYLINDER ROTATION
NO
SEE IC601-9, (CYLINDER DOES NOT ROTATE)
YES
SW 25Hz IC601-24
NO
CYL FG,PG IC601-97
YES
A
A
CAPSTAN ROTATION
NO
SEE (CAPSTAN DOES NOT ROTATE)
YES
(S.T REEL) IC601-98, 99
DC
TAKE UP REEL SENSOR SUPPLY REEL SENSOR (PT601.PT602)
PULSE
PROG.SW STATE IC601-76, 77, 78
STOP MODE
CHECK LOADING MOTOR MECHANISM OR SW601
YES
CHANGE IC601

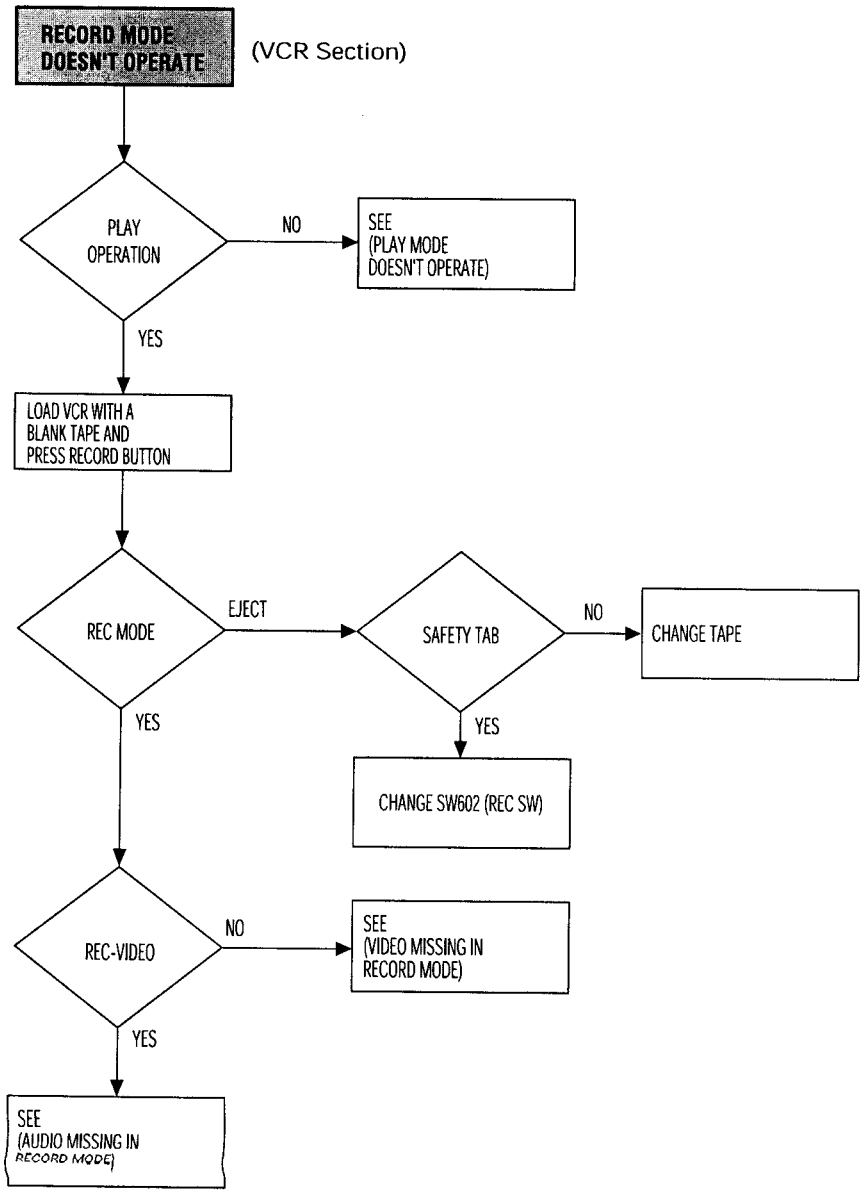
RECORD MODE DOESN'T OPERATE
(VCR Section)
PLAY OPERATION
NO
SEE (PLAY MODE DOESN'T OPERATE)
YES
LOAD VCR WITH A BLANK TAPE AND PRESS RECORD BUTTON
REC MODE
EJECT
SAFETY TAB
NO
CHANGE TAPE
YES
YES
CHANGE SW602 (REC SW)
REC-VIDEO
NO
SEE (VIDEO MISSING IN RECORD MODE)
YES
SEE (AUDIO MISSING IN RECORD MODE)

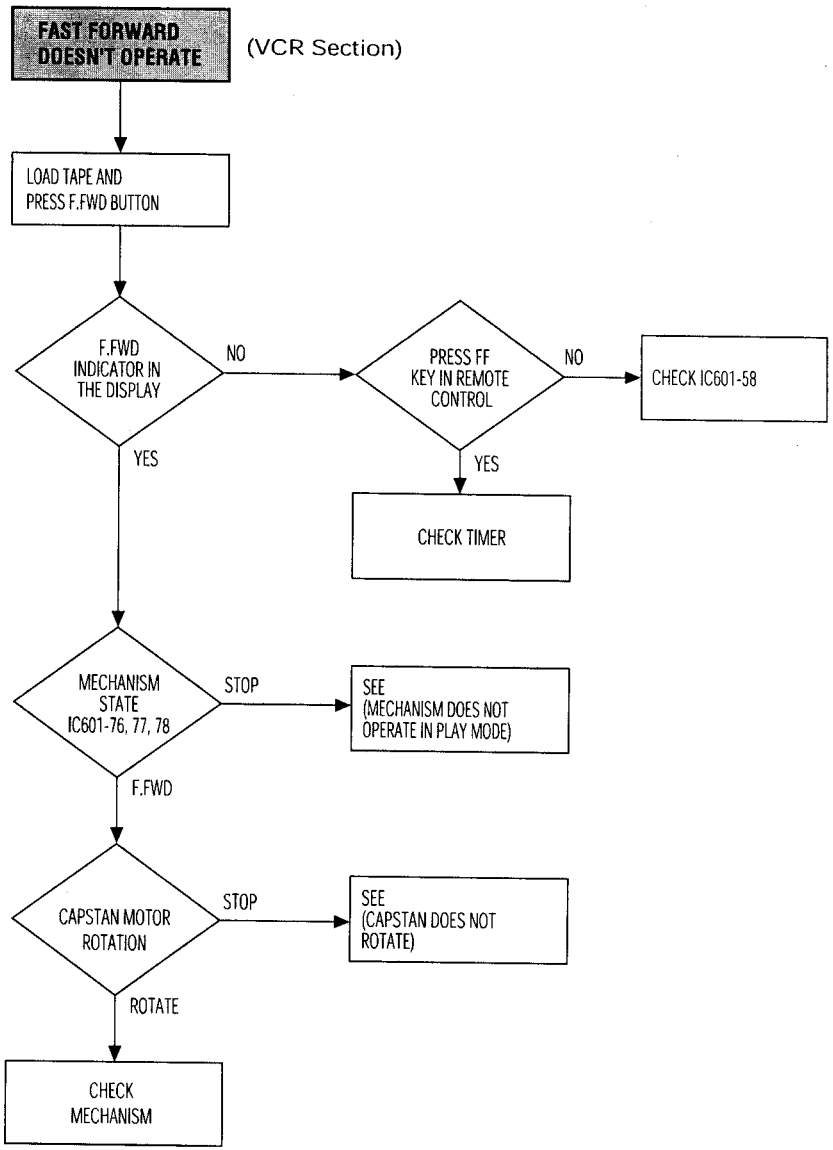
FAST FORWARD DOESN'T OPERATE
(VCR Section)
LOAD TAPE AND PRESS F.FWD BUTTON
F.FWD INDICATOR IN THE DISPLAY
NO
PRESS FF KEY IN REMOTE CONTROL
NO
CHECK IC601-58
YES
YES
CHECK TIMER
MECHANISM STATE IC601-76, 77, 78
STOP
SEE (MECHANISM DOES NOT OPERATE IN PLAY MODE)
F.FWD
CAPSTAN MOTOR ROTATION
STOP
SEE (CAPSTAN DOES NOT ROTATE)
ROTATE
CHECK MECHANISM

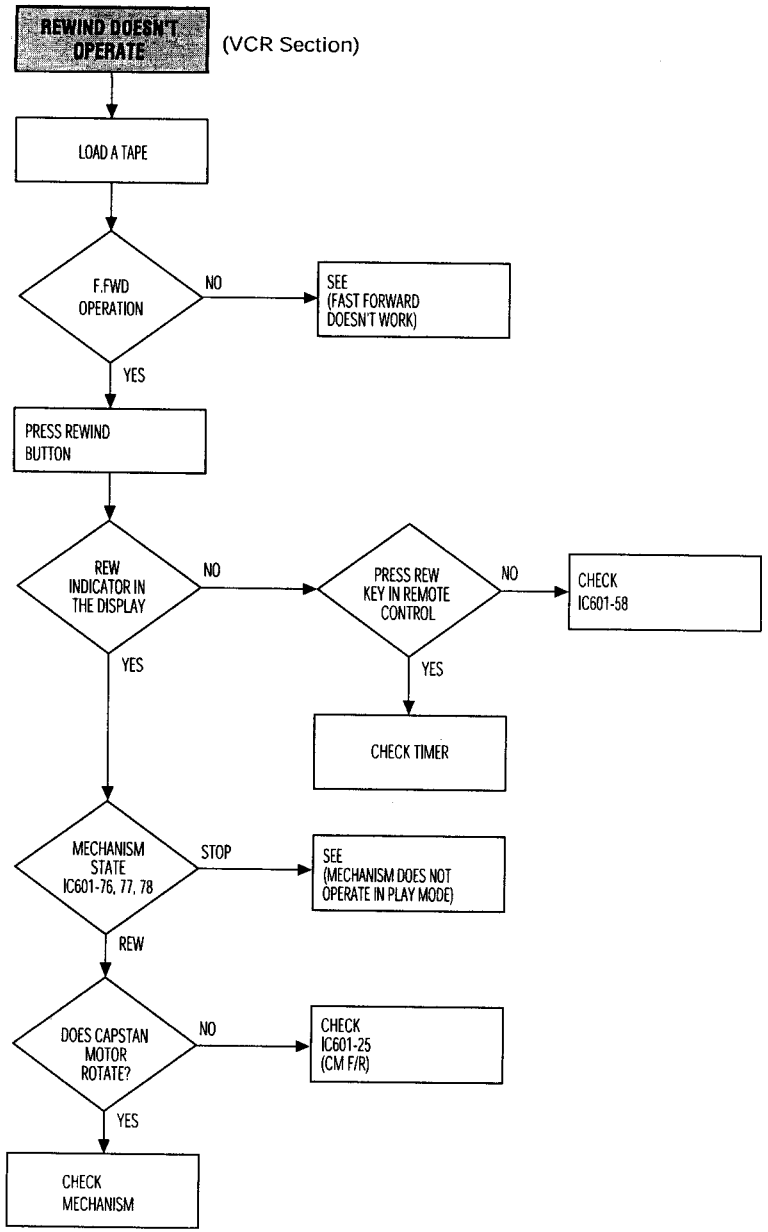
REWIND DOESN'T OPERATE
(VCR Section)
LOAD A TAPE
F.FWD OPERATION
NO
SEE (FAST FORWARD DOESN'T WORK)
YES
PRESS REWIND BUTTON
REW INDICATOR IN THE DISPLAY
NO
PRESS REW KEY IN REMOTE CONTROL
NO
CHECK IC601-58
YES
YES
CHECK TIMER
MECHANISM STATE IC601-76, 77, 78
STOP
SEE (MECHANISM DOES NOT OPERATE IN PLAY MODE)
REW
DOES CAPSTAN MOTOR ROTATE?
NO
CHECK IC601-25 (CM F/R)
YES
CHECK MECHANISM

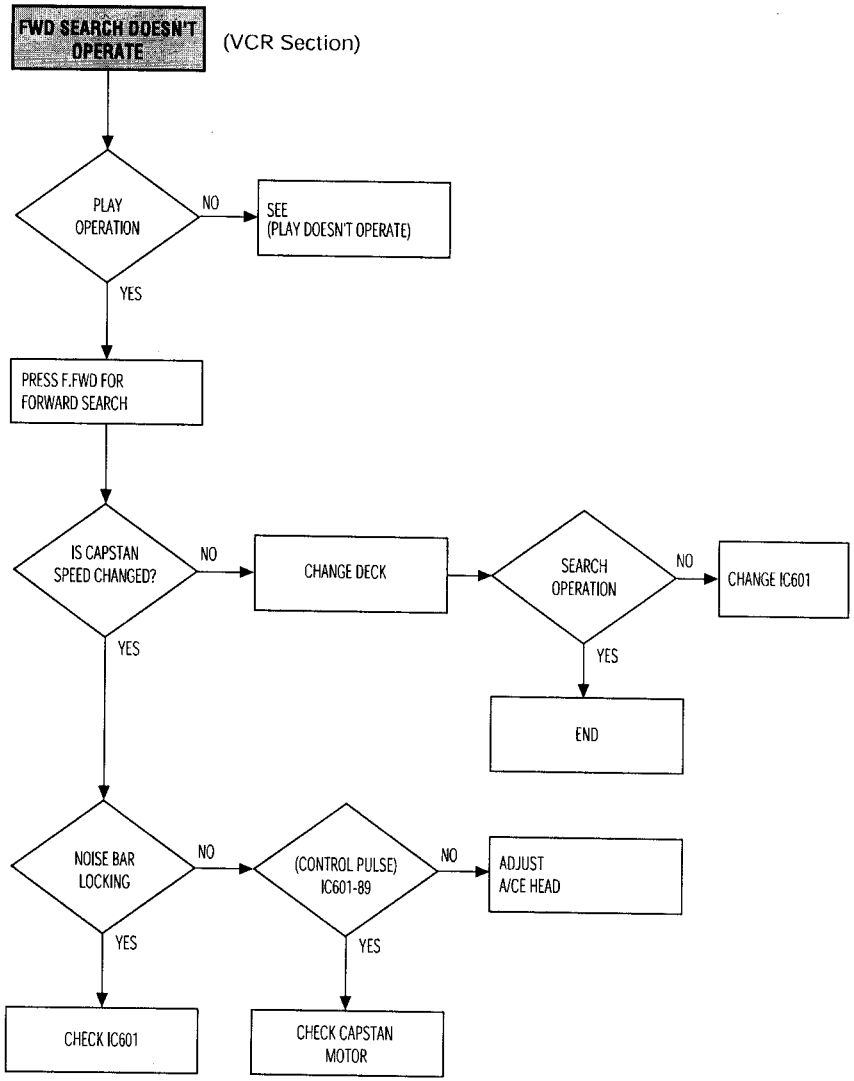
FWD SEARCH DOESN'T OPERATE
(VCR Section)
PLAY OPERATION
NO
SEE (PLAY DOESN'T OPERATE)
YES
PRESS F.FWD FOR FORWARD SEARCH
IS CAPSTAN SPEED CHANGED?
NO
CHANGE DECK
SEARCH OPERATION
NO
CHANGE IC601
YES
YES
END
NOISE BAR LOCKING
NO
(CONTROL PULSE) IC601-89
NO
ADJUST A/CE HEAD
YES
YES
CHECK IC601
CHECK CAPSTAN MOTOR

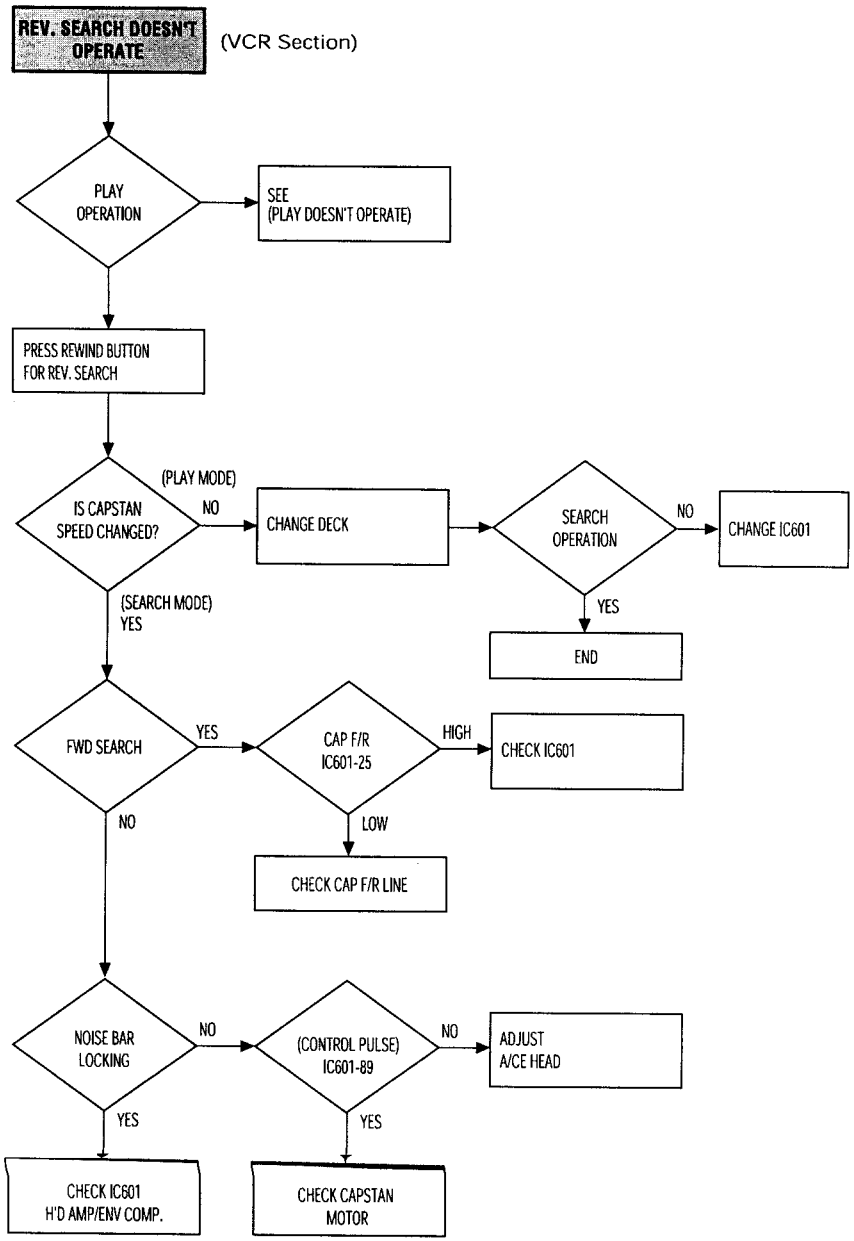
REV. SEARCH DOESN'T OPERATE
(VCR Section)
PLAY OPERATION
SEE (PLAY DOESN'T OPERATE)
PRESS REWIND BUTTON FOR REV. SEARCH
IS CAPSTAN SPEED CHANGED?
(PLAY MODE)
NO
CHANGE DECK
SEARCH OPERATION
NO
CHANGE IC601
YES
END
(SEARCH MODE)
YES
FWD SEARCH
YES
CAP F/R IC601-25
HIGH
CHECK IC601
LOW
CHECK CAP F/R LINE
NO
NOISE BAR LOCKING
NO
(CONTROL PULSE) IC601-89
NO
ADJUST A/CE HEAD
YES
YES
CHECK IC601 H'D AMP/ENV COMP.
CHECK CAPSTAN MOTOR

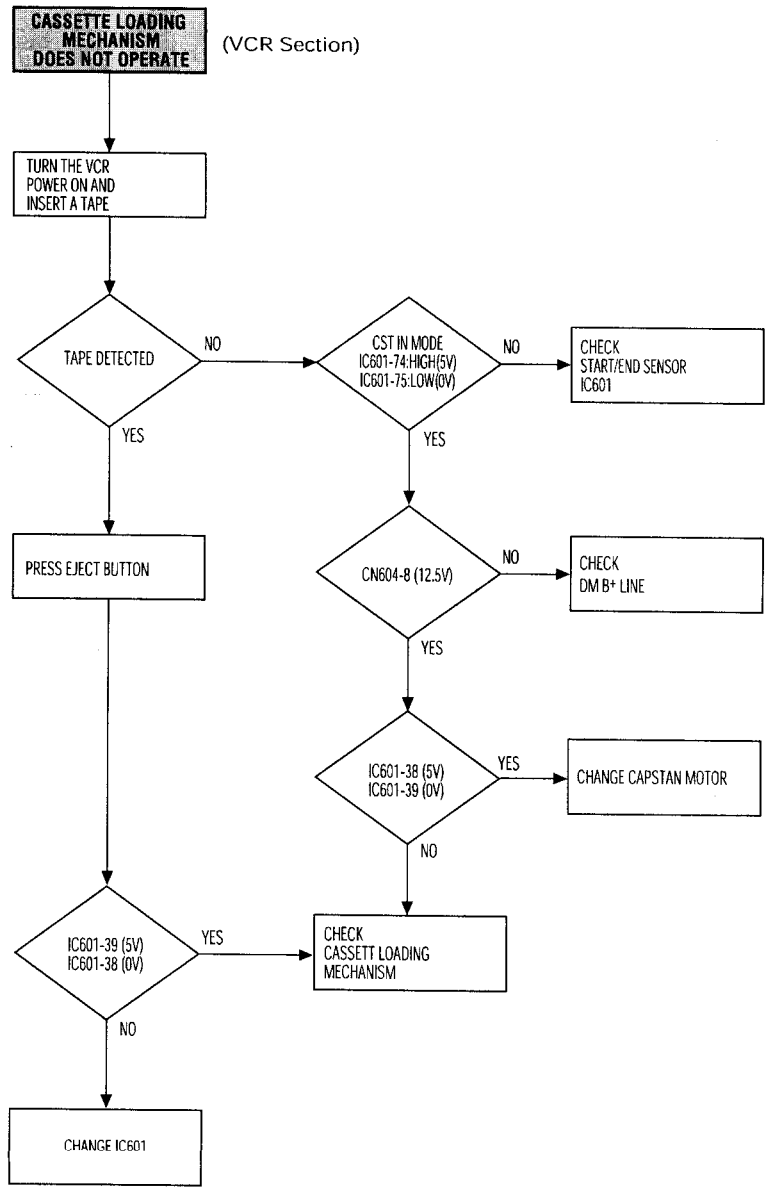
CASSETTE LOADING MECHANISM DOES NOT OPERATE
(VCR Section)
TURN THE VCR POWER ON AND INSERT A TAPE
TAPE DETECTED
NO
CST IN MODE IC601-74:HIGH(5V) IC601-75:LOW(0V)
NO
CHECK START/END SENSOR IC601
YES
YES
PRESS EJECT BUTTON
CN604-8 (12.5V)
NO
CHECK DM B+ LINE
YES
IC601-38 (5V) IC601-39 (0V)
YES
CHANGE CAPSTAN MOTOR
NO
IC601-39 (5V) IC601-38 (0V)
YES
CHECK CASSETT LOADING MECHANISM
NO
CHANGE IC601

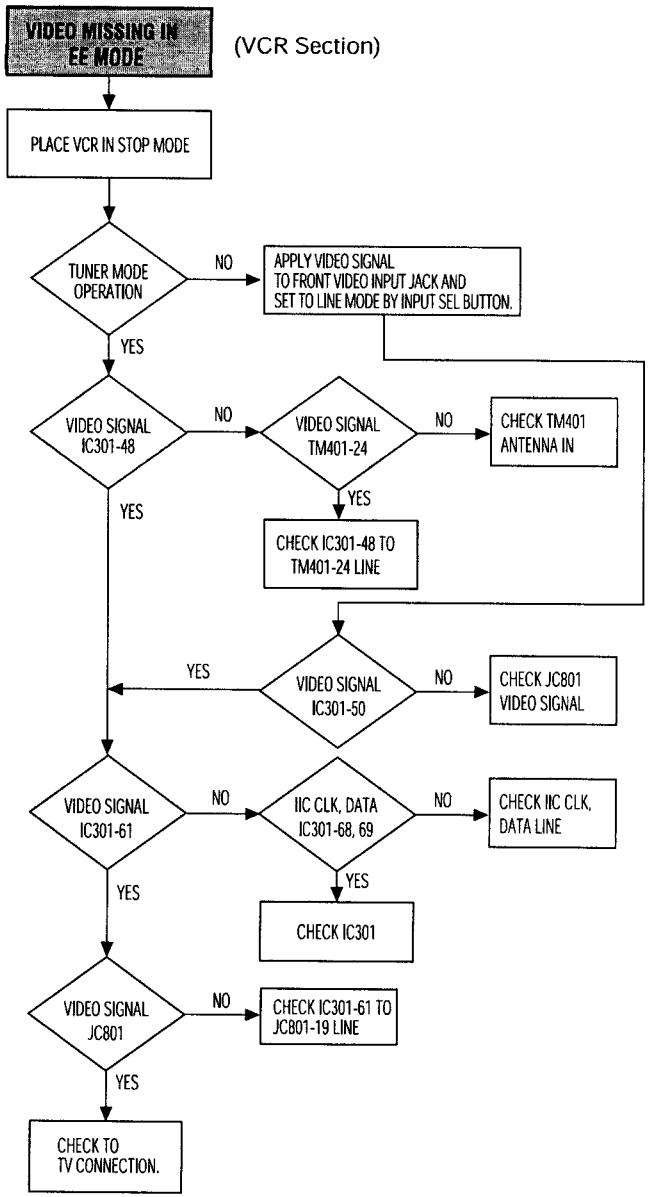
VIDEO MISSING IN EE MODE
(VCR Section)
PLACE VCR IN STOP MODE
TUNER MODE OPERATION
NO
APPLY VIDEO SIGNAL TO FRONT VIDEO INPUT JACK AND SET TO LINE MODE BY INPUT SEL BUTTON.
YES
VIDEO SIGNAL IC301-48
NO
VIDEO SIGNAL TM401-24
NO
CHECK TM401 ANTENNA IN
YES
CHECK IC301-48 TO TM401-24 LINE
YES
VIDEO SIGNAL IC301-50
NO
CHECK JC801 VIDEO SIGNAL
VIDEO SIGNAL IC301-61
NO
IIC CLK, DATA IC301-68, 69
NO
CHECK IIC CLK, DATA LINE
YES
CHECK IC301
VIDEO SIGNAL JC801
NO
CHECK IC301-61 TO JC801-19 LINE
YES
CHECK TO TV CONNECTION.

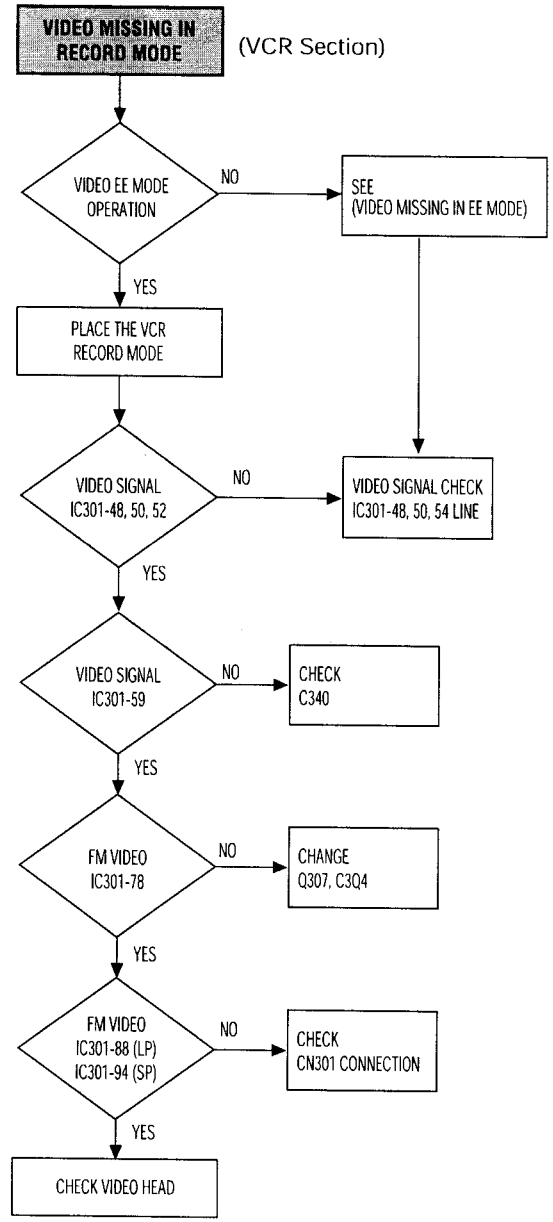
VIDEO MISSING IN RECORD MODE
(VCR Section)
VIDEO EE MODE OPERATION
NO
SEE (VIDEO MISSING IN EE MODE)
YES
PLACE THE VCR RECORD MODE
VIDEO SIGNAL IC301-48, 50, 52
NO
VIDEO SIGNAL CHECK IC301-48, 50, 54 LINE
YES
VIDEO SIGNAL IC301-59
NO
CHECK C340
YES
FM VIDEO IC301-78
NO
CHANGE Q307, C3Q4
YES
FM VIDEO IC301-88 (LP) IC301-94 (SP)
NO
CHECK CN301 CONNECTION
YES
CHECK VIDEO HEAD

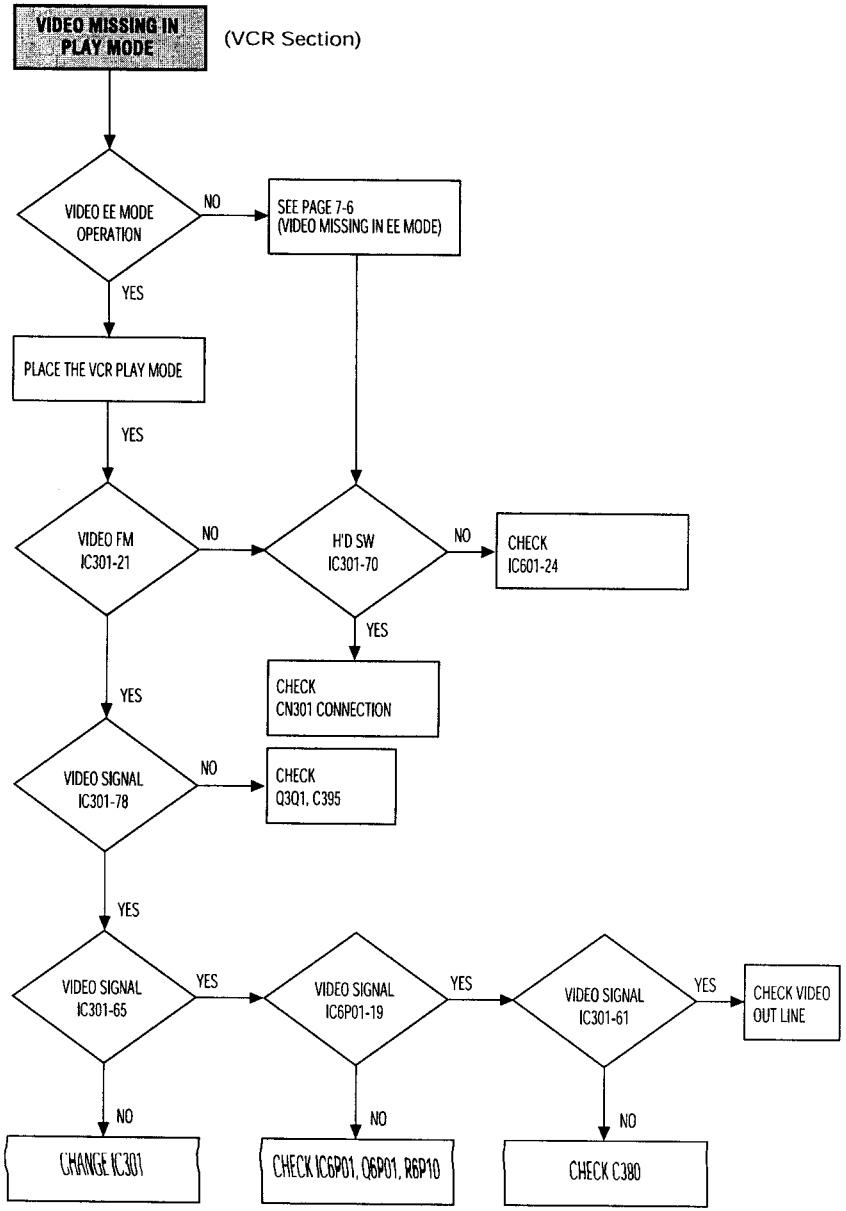
VIDEO MISSING IN PLAY MODE
(VCR Section)
VIDEO EE MODE OPERATION
NO
SEE PAGE 7-6 (VIDEO MISSING IN EE MODE)
YES
PLACE THE VCR PLAY MODE
YES
VIDEO FM IC301-21
NO
H'D SW IC301-70
NO
CHECK IC601-24
YES
CHECK CN301 CONNECTION
YES
VIDEO SIGNAL IC301-78
NO
CHECK Q3Q1, C395
YES
VIDEO SIGNAL IC301-65
YES
VIDEO SIGNAL IC6P01-19
YES
VIDEO SIGNAL IC301-61
YES
CHECK VIDEO OUT LINE
NO
CHANGE IC301
NO
CHECK IC6P01, Q6P01, R6P10
NO
CHECK C380

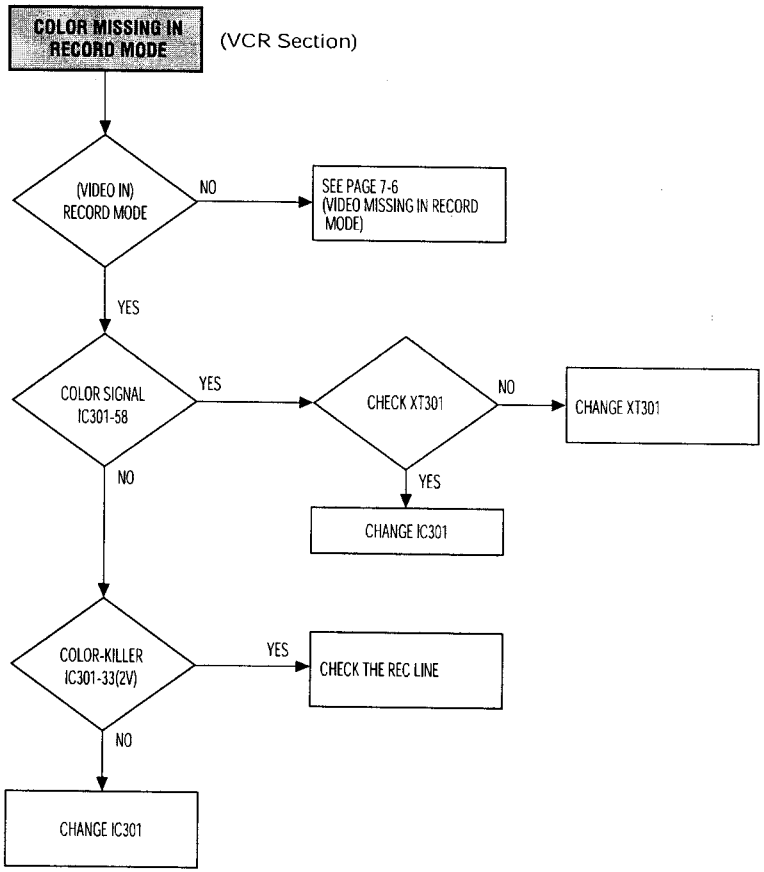
COLOR MISSING IN RECORD MODE
(VCR Section)
(VIDEO IN) RECORD MODE
NO
SEE PAGE 7-6 (VIDEO MISSING IN RECORD MODE)
YES
COLOR SIGNAL IC301-58
YES
CHECK XT301
NO
CHANGE XT301
YES
CHANGE IC301
NO
COLOR-KILLER IC301-33(2V)
YES
CHECK THE REC LINE
NO
CHANGE IC301

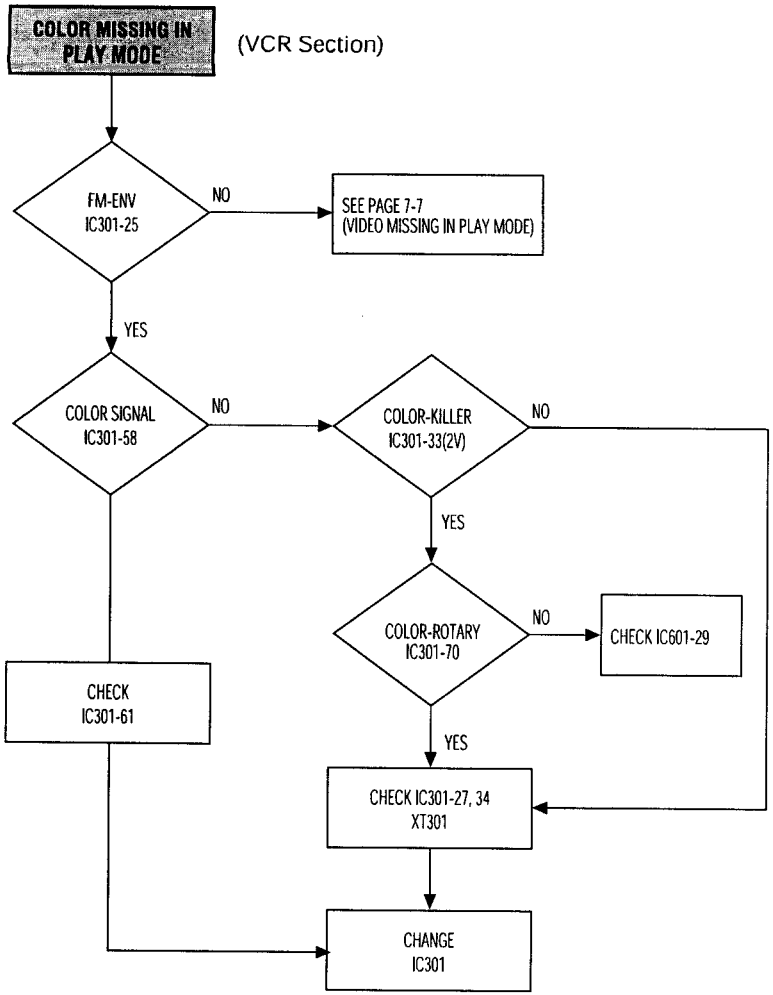
COLOR MISSING IN PLAY MODE
(VCR Section)
FM-ENV IC301-25
NO
SEE PAGE 7-7 (VIDEO MISSING IN PLAY MODE)
YES
COLOR SIGNAL IC301-58
NO
COLOR-KILLER IC301-33(2V)
NO
YES
COLOR-ROTARY IC301-70
NO
CHECK IC601-29
YES
CHECK IC301-61
CHECK IC301-27, 34 XT301
CHANGE IC301

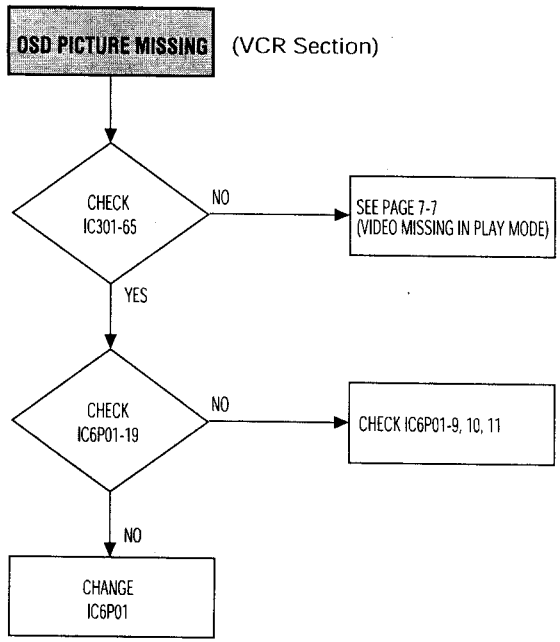
OSD PICTURE MISSING
(VCR Section)
CHECK IC301-65
NO
SEE PAGE 7-7 (VIDEO MISSING IN PLAY MODE)
YES
CHECK IC6P01-19
NO
CHECK IC6P01-9, 10, 11
NO
CHANGE IC6P01

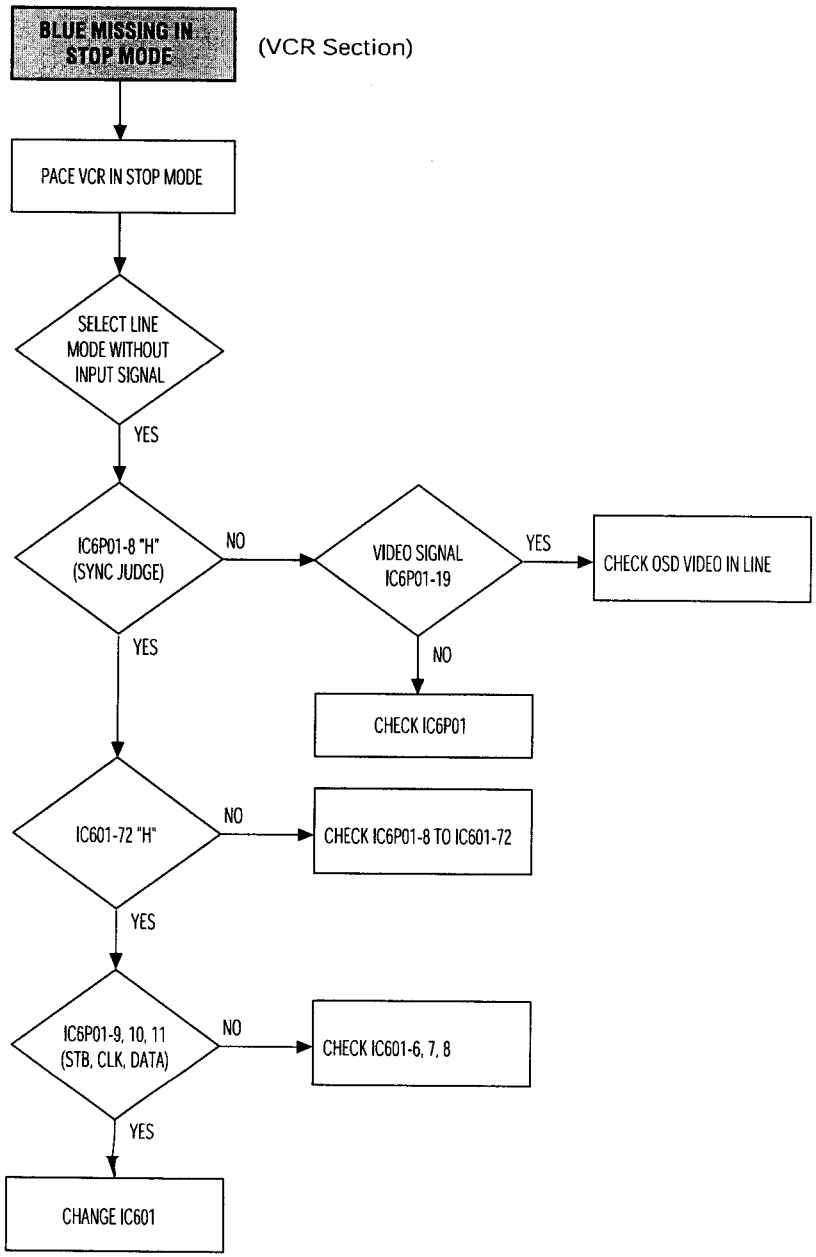
BLUE MISSING IN STOP MODE
(VCR Section)
PACE VCR IN STOP MODE
SELECT LINE MODE WITHOUT INPUT SIGNAL
YES
IC6P01-8 "H" (SYNC JUDGE)
NO
VIDEO SIGNAL IC6P01-19
YES
CHECK OSD VIDEO IN LINE
NO
CHECK IC6P01
YES
IC601-72 "H"
NO
CHECK IC6P01-8 TO IC601-72
YES
IC6P01-9, 10, 11 (STB, CLK, DATA)
NO
CHECK IC601-6, 7, 8
YES
CHANGE IC601

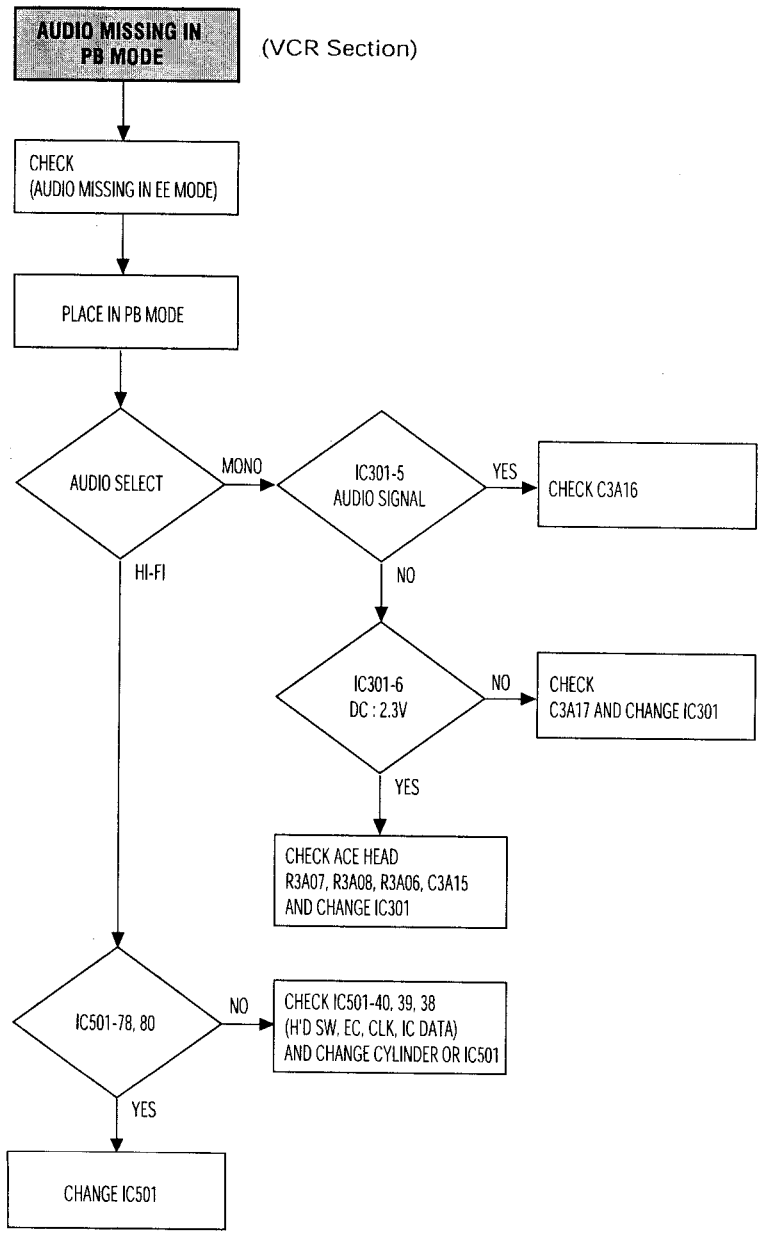
AUDIO MISSING IN PB MODE
(VCR Section)
CHECK (AUDIO MISSING IN EE MODE)
PLACE IN PB MODE
AUDIO SELECT
MONO
IC301-5 AUDIO SIGNAL
YES
CHECK C3A16
NO
HI-FI
IC301-6 DC : 2.3V
NO
CHECK C3A17 AND CHANGE IC301
YES
CHECK ACE HEAD R3A07, R3A08, R3A06, C3A15 AND CHANGE IC301
IC501-78, 80
NO
CHECK IC501-40, 39, 38 (H'D SW, EC, CLK, IC DATA) AND CHANGE CYLINDER OR IC501
YES
CHANGE IC501

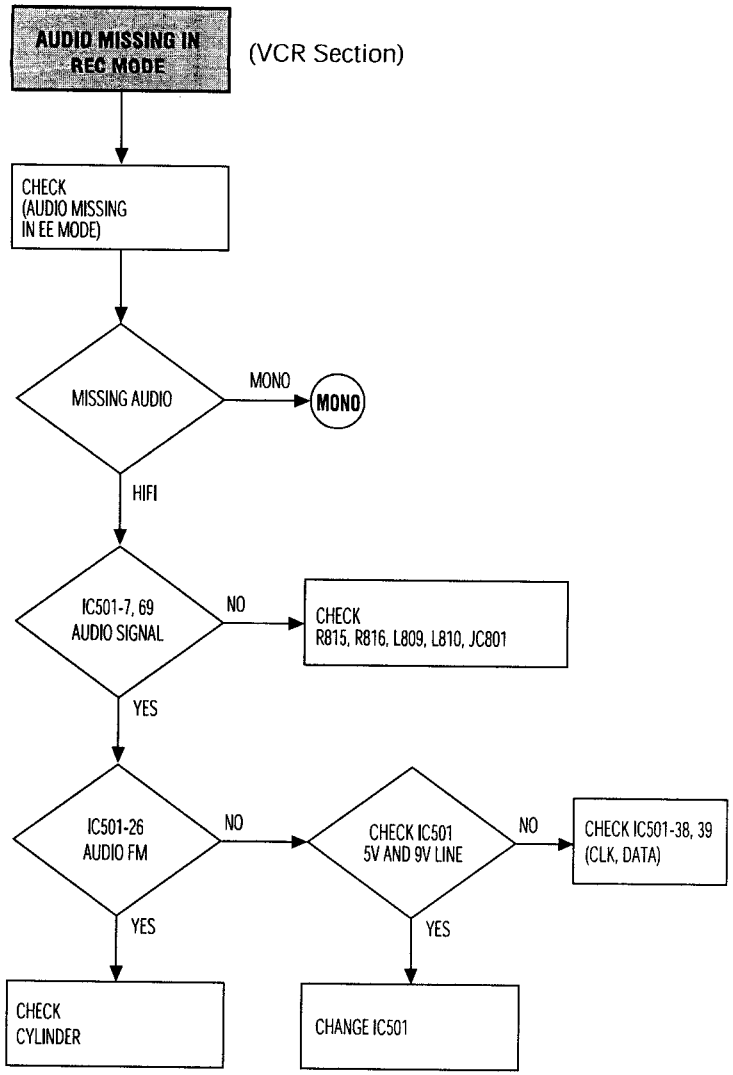
AUDIO MISSING IN REC MODE
(VCR Section)
CHECK (AUDIO MISSING IN EE MODE)
MISSING AUDIO
MONO
MONO
HIFI
IC501-7, 69 AUDIO SIGNAL
NO
CHECK R815, R816, L809, L810, JC801
YES
IC501-26 AUDIO FM
NO
CHECK IC501 5V AND 9V LINE
NO
CHECK IC501-38, 39 (CLK, DATA)
YES
YES
CHECK CYLINDER
CHANGE IC501

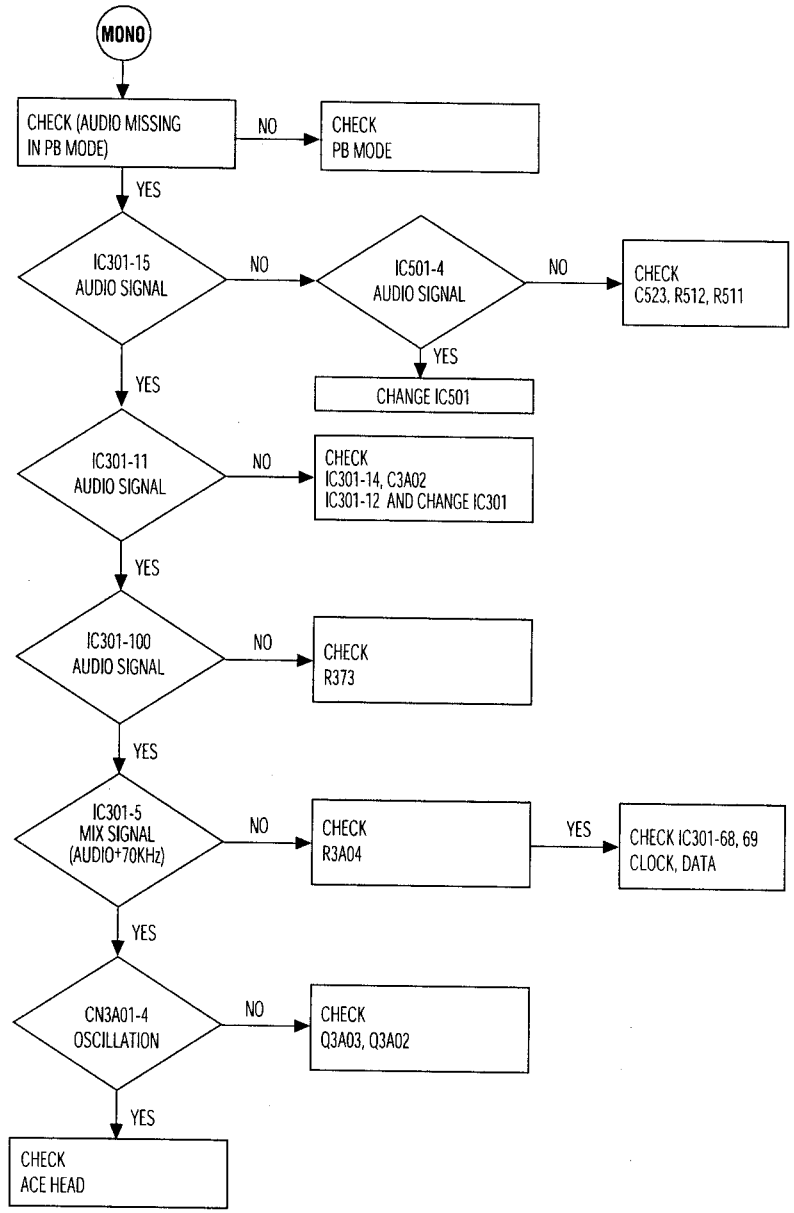
MONO
CHECK (AUDIO MISSING IN PB MODE)
NO
CHECK PB MODE
YES
IC301-15 AUDIO SIGNAL
NO
IC501-4 AUDIO SIGNAL
NO
CHECK C523, R512, R511
YES
CHANGE IC501
YES
IC301-11 AUDIO SIGNAL
NO
CHECK IC301-14, C3A02 IC301-12 AND CHANGE IC301
YES
IC301-100 AUDIO SIGNAL
NO
CHECK R373
YES
IC301-5 MIX SIGNAL (AUDIO+70KHz)
NO
CHECK R3A04
YES
CHECK IC301-68, 69 CLOCK, DATA
YES
CN3A01-4 OSCILLATION
NO
CHECK Q3A03, Q3A02
YES
CHECK ACE HEAD

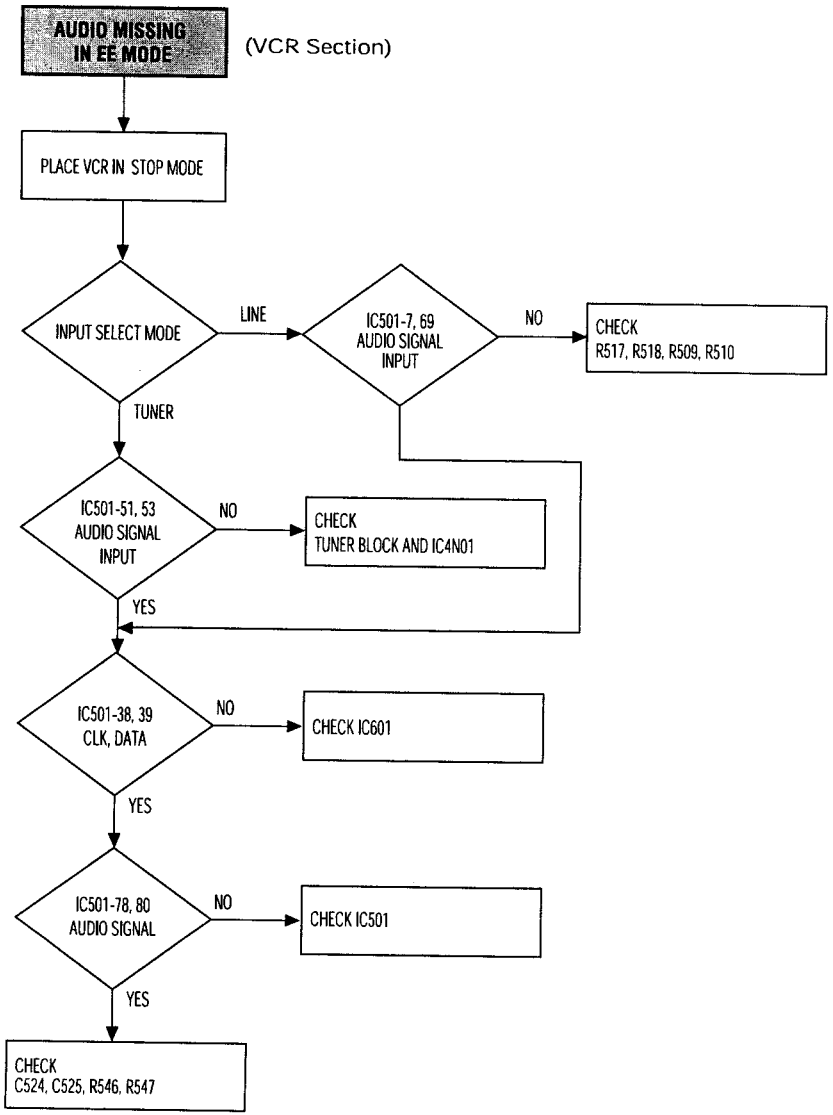
AUDIO MISSING IN EE MODE
(VCR Section)
PLACE VCR IN STOP MODE
INPUT SELECT MODE
LINE
IC501-7, 69 AUDIO SIGNAL INPUT
NO
CHECK R517, R518, R509, R510
TUNER
IC501-51, 53 AUDIO SIGNAL INPUT
NO
CHECK TUNER BLOCK AND IC4N01
YES
IC501-38, 39 CLK, DATA
NO
CHECK IC601
YES
IC501-78, 80 AUDIO SIGNAL
NO
CHECK IC501
YES
CHECK C524, C525, R546, R547

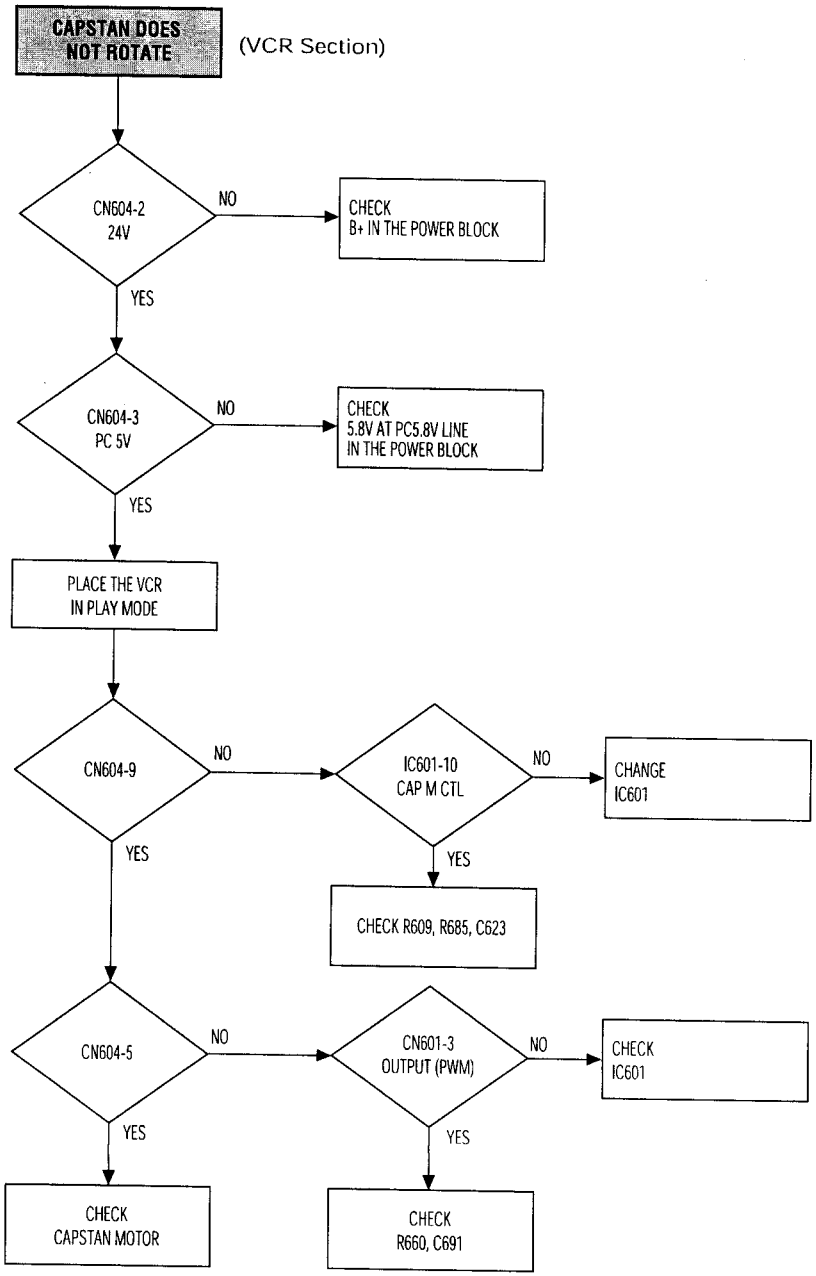
CAPSTAN DOES NOT ROTATE
(VCR Section)
CN604-2 24V
NO
CHECK B+ IN THE POWER BLOCK
YES
CN604-3 PC 5V
NO
CHECK 5.8V AT PC5.8V LINE IN THE POWER BLOCK
YES
PLACE THE VCR IN PLAY MODE
CN604-9
NO
IC601-10 CAP M CTL
NO
CHANGE IC601
YES
YES
CHECK R609, R685, C623
CN604-5
NO
CN601-3 OUTPUT (PWM)
NO
CHECK IC601
YES
YES
CHECK CAPSTAN MOTOR
CHECK R660, C691

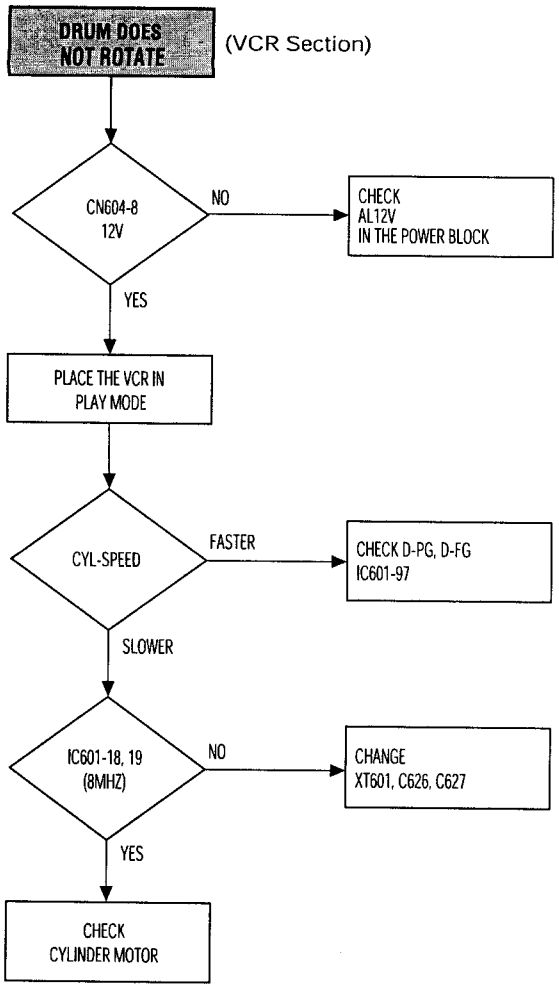
DRUM DOES NOT ROTATE
(VCR Section)
CN604-8 12V
NO
CHECK AL12V IN THE POWER BLOCK
YES
PLACE THE VCR IN PLAY MODE
CYL-SPEED
FASTER
CHECK D-PG, D-FG IC601-97
SLOWER
IC601-18, 19 (8MHZ)
NO
CHANGE XT601, C626, C627
YES
CHECK CYLINDER MOTOR

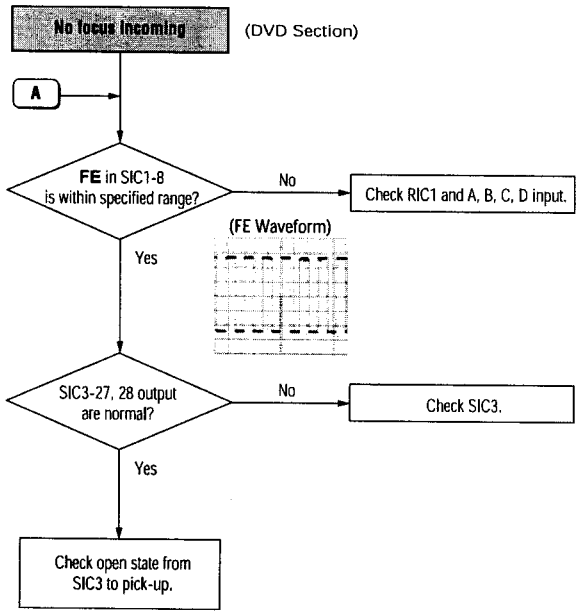
No focus incoming
(DVD Section)
A
FE in SIC1-8 is within specified range?
No
Check RIC1 and A, B, C, D input.
(FE Waveform)
Yes
SIC3-27, 28 output are normal?
No
Check SIC3.
Yes
Check open state from SIC3 to pick-up.

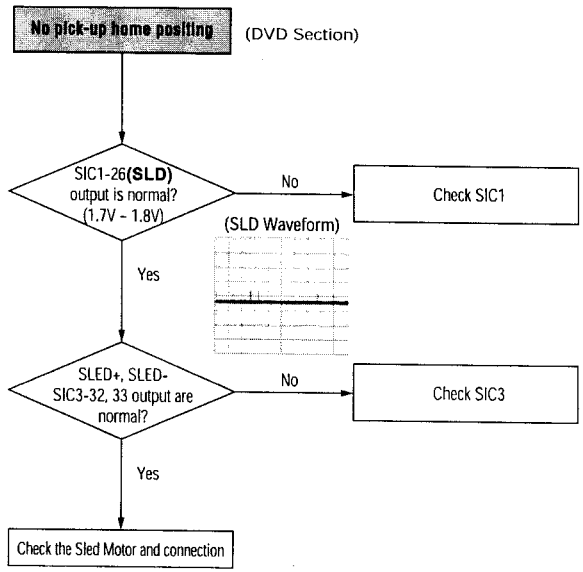
No pick-up home posiing
(DVD Section)
SIC1-26(SLD) output is normal? (1.7V ~ 1.8V)
No
Check SIC1
(SLD Waveform)
Yes
SLED+, SLED- SIC3-32, 33 output are normal?
No
Check SIC3
Yes
Check the Sled Motor and connection

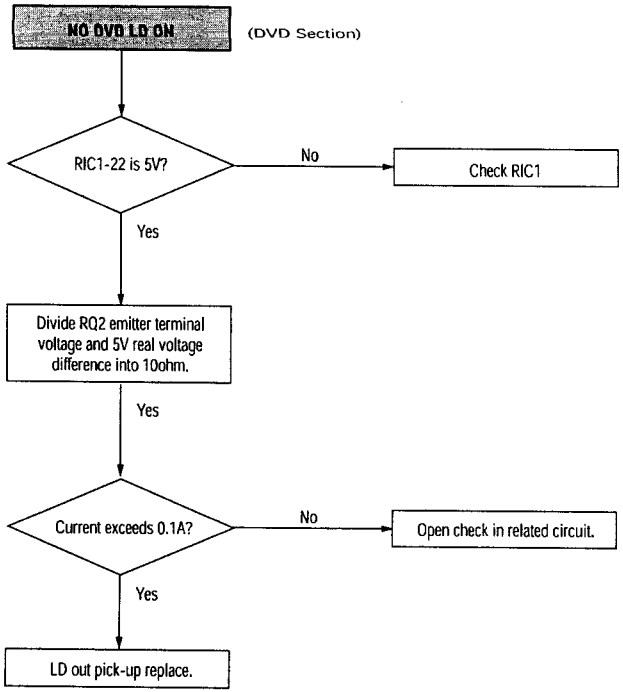
NO DVD LD ON
(DVD Section)
RIC1-22 is 5V?
No
Check RIC1
Yes
Divide RQ2 emitter terminal voltage and 5V real voltage difference into 10ohm.
Yes
Current exceeds 0.1A?
No
Open check in related circuit.
Yes
LD out pick-up replace.

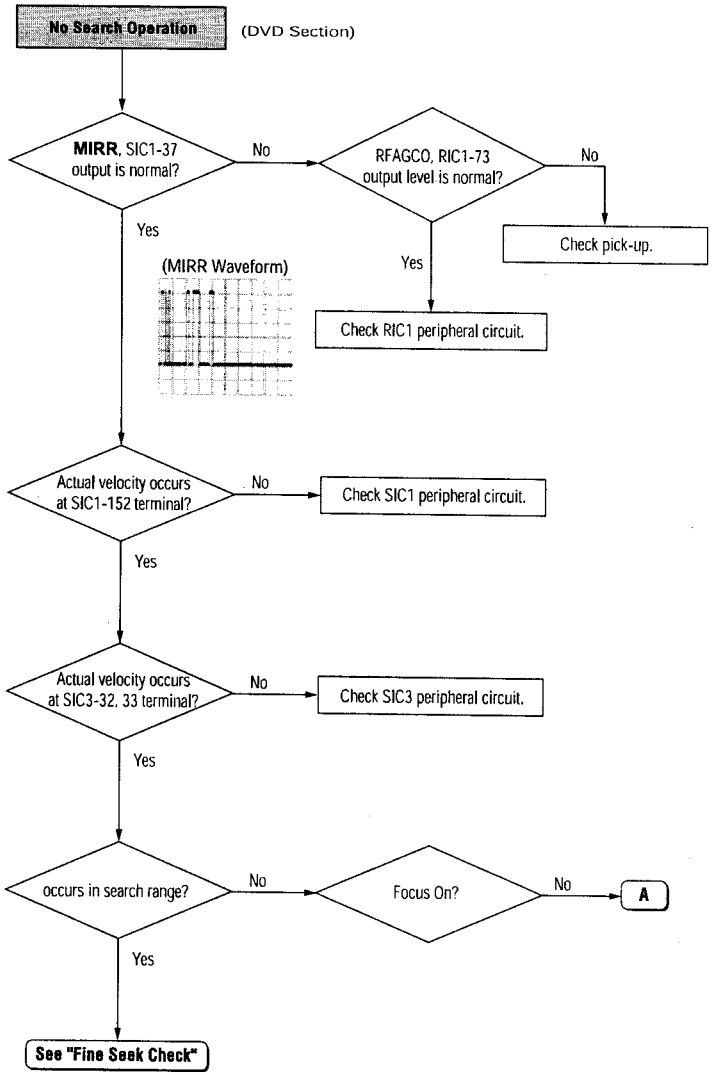
No Search Operation
(DVD Section)
MIRR, SIC1-37 output is normal?
No
RFAGCO, RIC1-73 output level is normal?
No
Check pick-up.
Yes
(MIRR Waveform)
Yes
Check RIC1 peripheral circuit.
Actual velocity occurs at SIC1-152 terminal?
No
Check SIC1 peripheral circuit.
Yes
Actual velocity occurs at SIC3-32, 33 terminal?
No
Check SIC3 peripheral circuit.
Yes
occurs in search range?
No
Focus On?
No
A
Yes
See "Fine Seek Check"

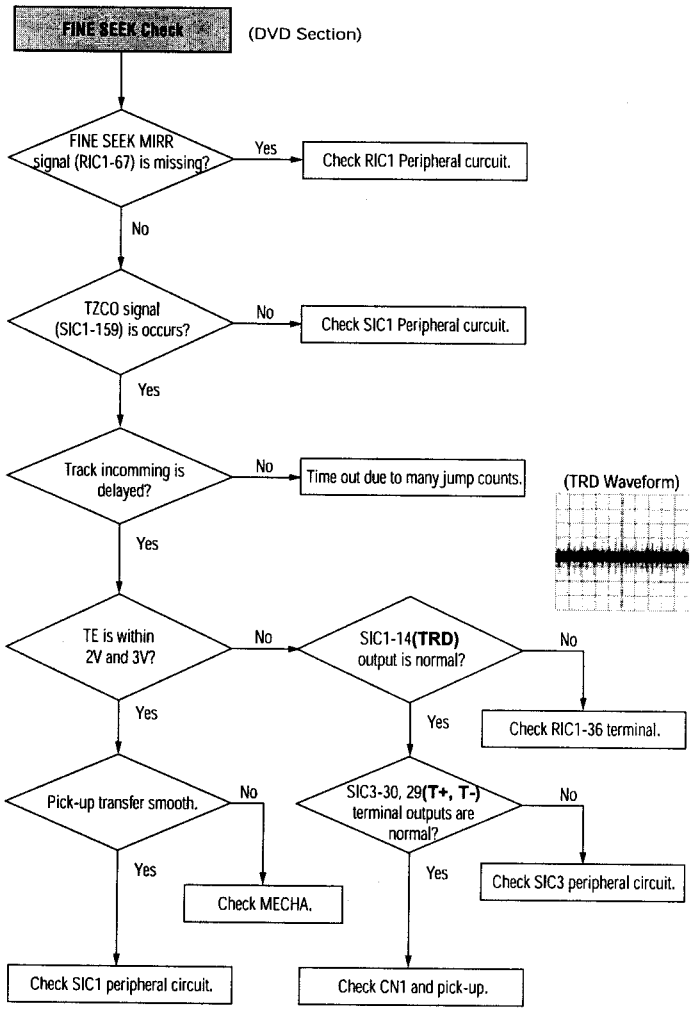
FINE SEEK Check
(DVD Section)
FINE SEEK MIRR signal (RIC1-67) is missing?
Yes
Check RIC1 Peripheral curcuit.
No
TZCO signal (SIC1-159) is occurs?
No
Check SIC1 Peripheral curcuit.
Yes
Track incomming is delayed?
No
Time out due to many jump counts.
(TRD Waveform)
Yes
TE is within 2V and 3V?
No
SIC1-14(TRD) output is normal?
No
Check RIC1-36 terminal.
Yes
Yes
Pick-up transfer smooth.
No
SIC3-30, 29(T+, T-) terminal outputs are normal?
No
Check SIC3 peripheral circuit.
Yes
Yes
Check MECHA.
Check SIC1 peripheral circuit.
Check CN1 and pick-up.

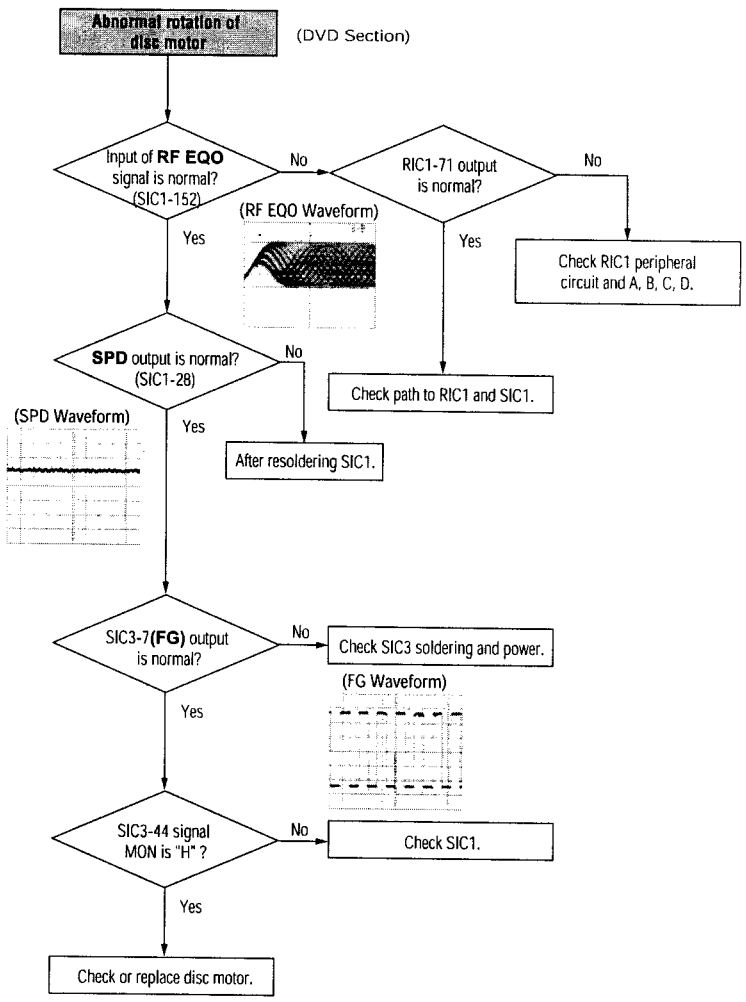
Abnormal rotation of disc motor
(DVD Section)
Input of RF EQO signal is normal? (SIC1-152)
No
RIC1-71 output is normal?
No
(RF EQO Waveform)
Yes
Yes
Check RIC1 peripheral circuit and A, B, C, D.
SPD output is normal? (SIC1-28)
No
Check path to RIC1 and SIC1.
(SPD Waveform)
Yes
After resoldering SIC1.
SIC3-7(FG) output is normal?
No
Check SIC3 soldering and power.
(FG Waveform)
Yes
SIC3-44 signal MON is "H" ?
No
Check SIC1.
Yes
Check or replace disc motor.

No Tray open/close (DVD Section)

ZIC1-24, 25 is Open ; "L" ? Close ; "H" ?

No → Check ZIC1 perpheral circuit.

Yes

Check SIC3-34, 35 output at **OPEN**/CLOSE

No → Check SIC3 perpheral circuit and CN3 connector.

Yes

Check signal line state from SIC3-34, 35 to tray motor.

(OPEN Waveform)

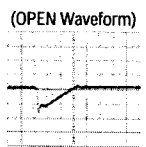

CD/VCD/DVD L/R output error (Mixed Audio output) (DVD Section)

Normal **DATA 0** is input in AIC2-2?

No → Check ZIC1-184 output.

(DATA 0 Waveform)

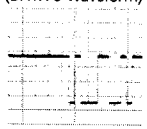

Yes

CHECK AIC2-7, 8pin output is normal?

No → Check ZIC1-179 (CD/VCD ; 16.9344MHz, DVD ; 18.432MHz)

(Vout Waveform)

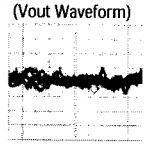

Yes

AIC4-1, 7 output is normal?

No → Check AIC4 peripheral circuit.

Yes

Check PCB peripheral Pattern shot.

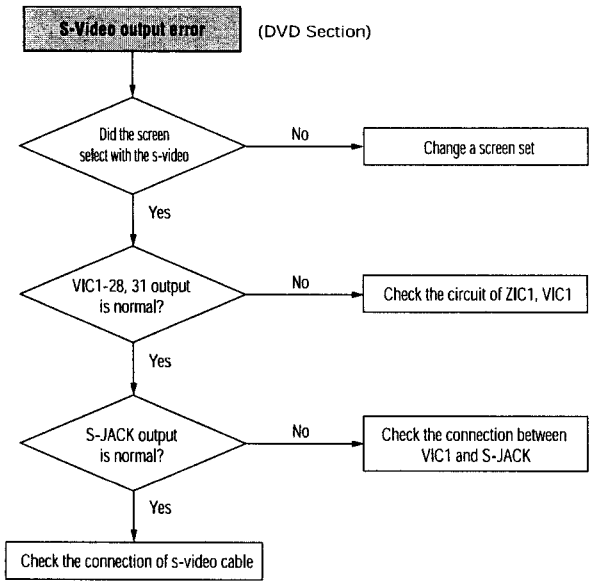
S-Video output error
(DVD Section)
Did the screen select with the s-video
No
Change a screen set
Yes
VIC1-28, 31 output is normal?
No
Check the circuit of ZIC1, VIC1
Yes
S-JACK output is normal?
No
Check the connection between VIC1 and S-JACK
Yes
Check the connection of s-video cable

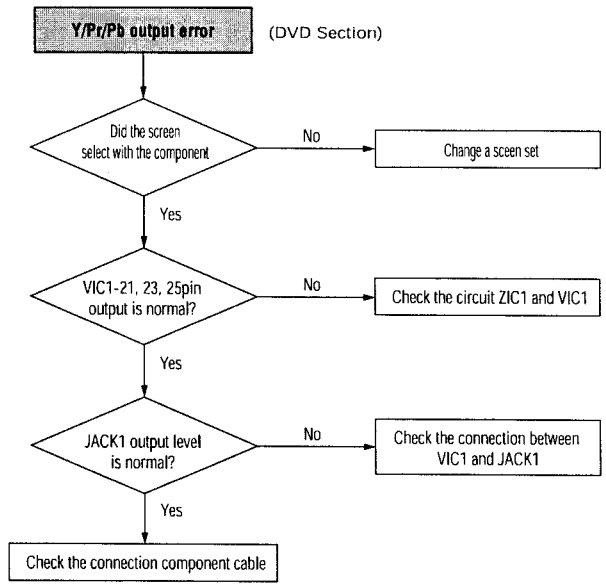
Y/Pr/Pb output error
(DVD Section)
Did the screen select with the component
No
Change a sceen set
Yes
VIC1-21, 23, 25pin output is normal?
No
Check the circuit ZIC1 and VIC1
Yes
JACK1 output level is normal?
No
Check the connection between VIC1 and JACK1
Yes
Check the connection component cable

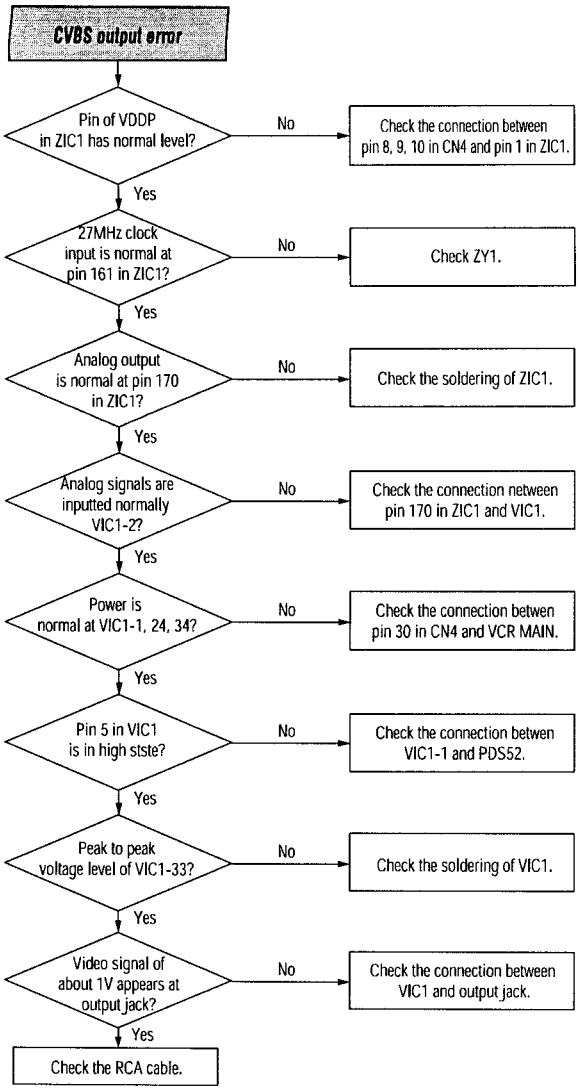
CVBS output error
Pin of VDDP in ZIC1 has normal level?
No
Check the connection between pin 8, 9, 10 in CN4 and pin 1 in ZIC1.
Yes
27MHz clock input is normal at pin 161 in ZIC1?
No
Check ZY1.
Yes
Analog output is normal at pin 170 in ZIC1?
No
Check the soldering of ZIC1.
Yes
Analog signals are inputted normally VIC1-2?
No
Check the connection netween pin 170 in ZIC1 and VIC1.
Yes
Power is normal at VIC1-1, 24, 34?
No
Check the connection betwen pin 30 in CN4 and VCR MAIN.
Yes
Pin 5 in VIC1 is in high stste?
No
Check the connection betwen VIC1-1 and PDS52.
Yes
Peak to peak voltage level of VIC1-33?
No
Check the soldering of VIC1.
Yes
Video signal of about 1V appears at output jack?
No
Check the connection between VIC1 and output jack.
Yes
Check the RCA cable.

8. REPAIR PARTS LIST

8-1 Exploded Views ---------- 8-2

8-1-1 Cabinet Assembly ---------- 8-2

8-1-2 VCR Mechanical Parts (Top Side) ---------- 8-4

8-1-3 VCR Mechanical Parts (Bottom Side) ---------- 8-5

8-1-4 DVD Mechanical Parts ---------- 8-6

8-2 Electrical Parts List ---------- 8-7

8-1 EXPLODED VIEWS

NOTE:
- -XX, -X mean standardized parts, so they may have some differences from the original one.
- Items marked "*" are not stocked since they are seldom required for routine service. Some delay should be anticipated when ordering these items.
- The mechanical parts with no reference number in the exploded views are not supplied.

The components identified by mark ⚠ or dotted line with mark ⚠ are critical for safety. Replace only with part number specified.

8-1-1 Cabinet Assembly

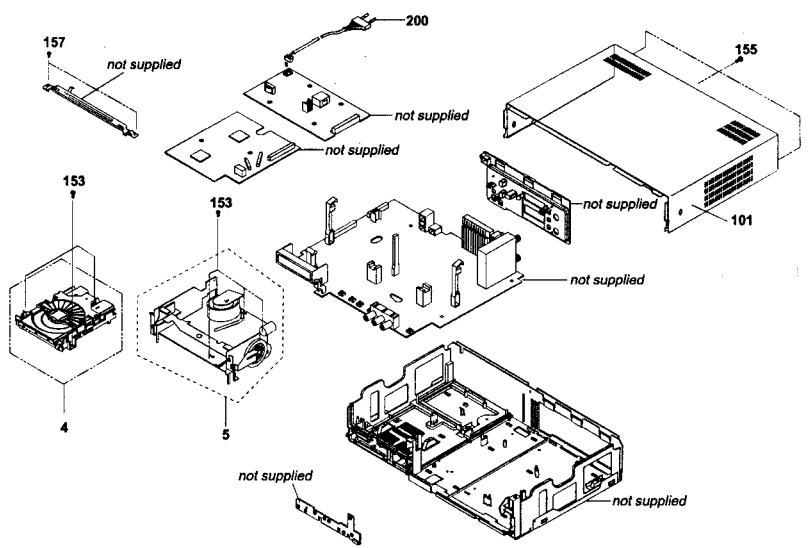

Ref. No.	Part No.	Description	Remarks
4	9-885-037-38	ASSY DVD DECK	
5	3-084-083-01	ASSY DECK	
101	9-885-043-09	CASE (COMBO PAL), UPPER	
153	3-075-256-01	SCREW TAP 3X12	

Ref. No.	Part No.	Description	Remarks
155	3-078-566-01	SCREW TAP M3 L10 BLK	
157	3-075-262-01	SCREW BH 4X12	
⚠200	1-823-023-11	POWER CORD KKP419C (EXCEPT D950GI)	
⚠200	1-823-025-11	POWER CORD Y352 (D950GI)	

Models	1	UT01
SLV-D910	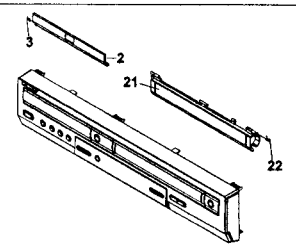	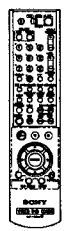
SLV-D950	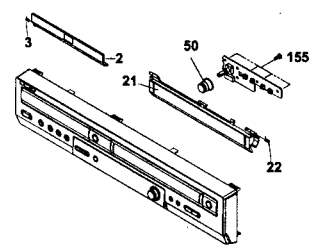	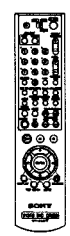

Ref. No.	Part No.	Description	Remarks
1	9-885-043-21	ASSY PANEL FRONT (D910B/D910E/D910N)	
1	9-885-043-22	ASSY PANEL FRONT (D950B/D950E)	
1	9-885-043-23	ASSY PANEL FRONT (D950GI)	
1	9-885-043-24	ASSY PANEL FRONT (D910R)	
1	9-885-043-25	ASSY PANEL FRONT (D910AZ)	
2	9-885-037-27	DOOR TRAY	
3	9-885-037-28	SPRING ETC-DOOR TRAY	
21	9-885-037-26	DOOR CASSETTE	
22	9-885-037-13	SPRING ETC MASK	
50	9-885-040-31	DIAL SHUTTLE VR1 (D950B/D950E/D950GI/D910AZ)	
UT01	9-885-043-07	COMMANDER (RMT-V503A) (D910B/D910E/D910N/D910R/D910AZ)	
UT01	9-885-043-08	COMMANDER (RMT-V503B) (D950B/D950E/D950GI)	

8-1-2 VCR Mechanical Parts (Top Side)

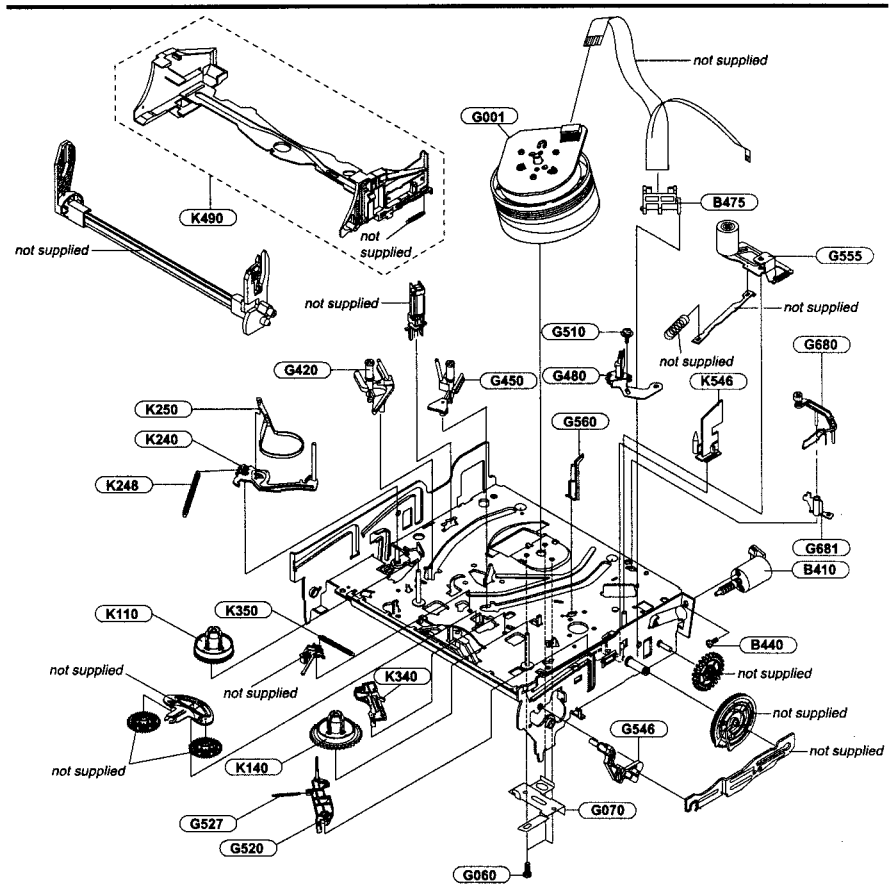

Ref. No.	Part No.	Description	Remarks
B410	1-763-836-11	LOADING ASSY, MOTOR	
B440	3-075-253-01	SCREW ASSY MAC 2.6X5	
B475	1-796-433-11	DAMPER CAPSTAN	
B480	3-075-241-01	ASSY ACE HEAD	
G001	1-796-704-11	ASSY CLYNDER 6HD (SECAM)	
G060	3-075-254-01	SCREW ASSY MAC 3X6	
G070	3-067-796-01	PLATE-GROUND DECK	
G420	3-079-347-01	SLIDER-SUPPLY ASSY	
G450	3-079-346-01	SLIDER-TAKE UP ASSY	
G510	3-084-091-01	SCREW TAP 2.6X5	
G520	3-067-779-01	LEVER-#9 GUIDE	
G527	3-067-780-01	SPRING-#9 GUIDE	
G546	3-067-787-01	LEVER-FL DOOR	
G555	3-067-784-01	LEVER-UNIT PINCH	
G680	3-075-021-01	AUTO HEAD CLEANER (G680)	
G681	3-075-022-01	AUTO HEAD CLEANER (G681)	
K110	3-075-047-01	DISK S REEL	
K140	3-075-046-01	DISK T REEL	
K240	3-067-781-01	LEVER-TENSION	
K248	3-067-782-01	SPRING-TENSION LEVER	
K250	3-067-783-01	BAND-BREAK	
K340	3-067-785-01	LEVER-T. BRAKE	
K350	3-067-786-01	SPRING-BRAKE	
K490	3-067-788-01	HOLDER-FL CASS.	
K546	3-067-789-01	GUIDE-CASS.DOOR	

8-1-3 VCR Mechanical Parts (Bottom Side)

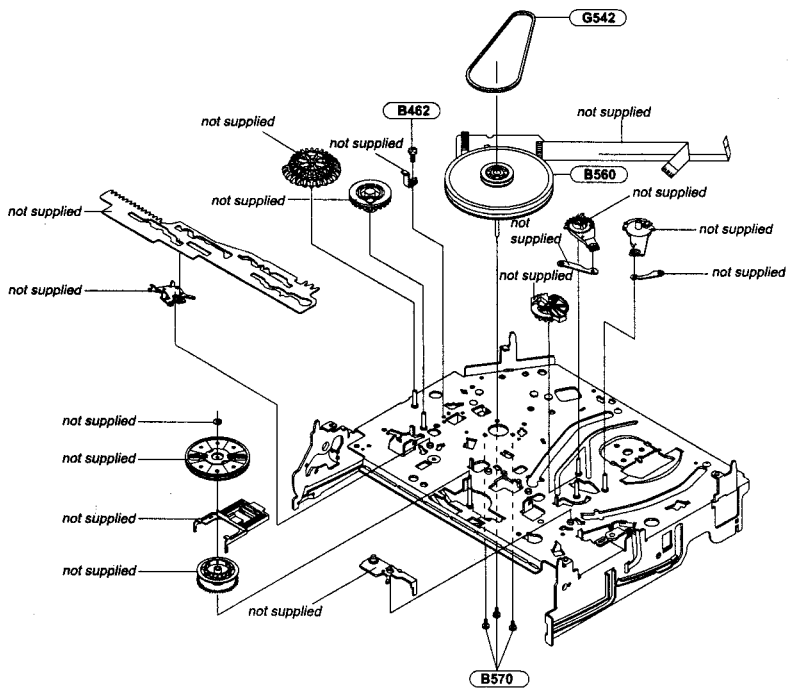

Ref. No.	Part No.	Description	Remarks
B462	3-075-260-01	SCREW MAC 3X3	
B560	1-796-432-11	MOTOR CAPSTAN	
B570	3-075-259-01	SCREW CAP 2.6X6	
G542	3-067-790-01	BELT-PULLEY	

8-1-4 DVD Mechanical Parts

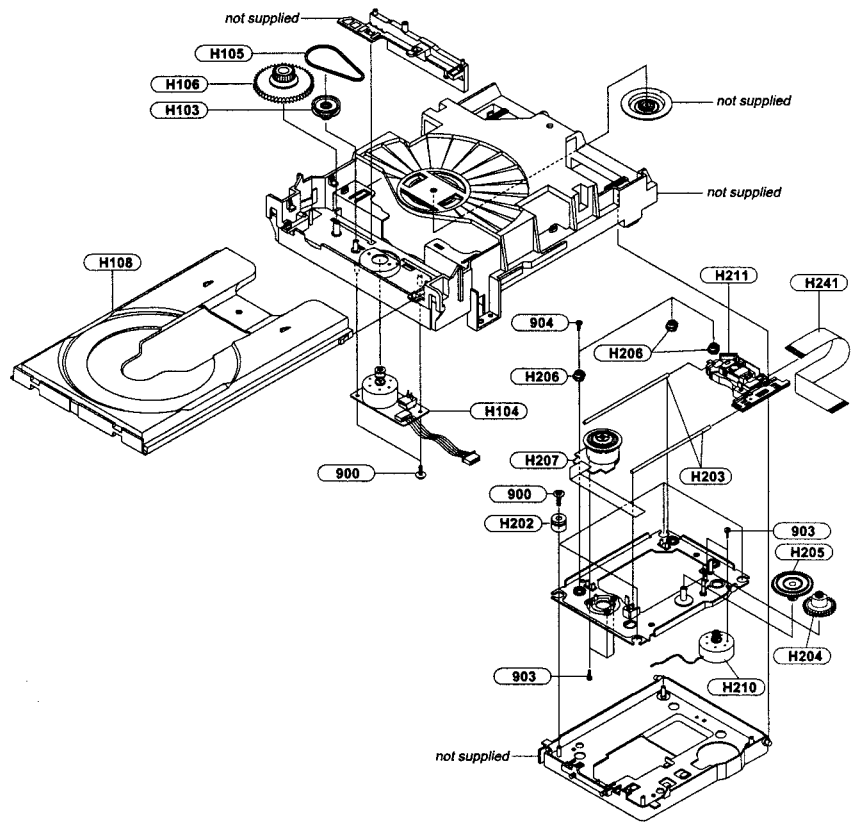

The components identified by mark ⚠ or dotted line with mark ⚠ are critical for safety. Replace only with part number specified.

Ref. No.	Part No.	Description	Remarks
900	3-078-592-01	SCREW TAP 2X6	
903	9-885-037-07	SCREW MAC 1.7X3	
904	9-885-037-08	SCREW TAP 1.7X5	
H103	9-885-037-29	PULLEY GEAR	
H104	9-885-037-20	MOTOR LOADING ASSY	
H105	3-078-583-01	BELT RECTANGULAR	
H106	9-885-037-30	GEAR TRAY	
H108	9-885-037-24	TRAY DISC	
H202	9-885-037-35	RUBBER INSULATOR	
H203	3-078-588-01	SHAFT PU	
H204	9-885-037-31	GEAR FEED A	
H205	9-885-037-32	GEAR FEED B	
H206	9-885-037-23	HOLDER-CAM SKEW	
H207	9-885-037-21	MOTOR-SPINDLE	
H210	9-885-037-22	MOTOR FEED ASSY	
⚠H211	9-885-037-37	ASSY PICK UP	
H241	9-885-037-06	CABLE FLAT 24P	

Ref. No.	Part No.	Description	Remarks
		< FUSE >	
⚠FZ01	1-576-729-11	FUSE-RADIAL LEAD1A	
⚠FZ02	1-576-729-11	FUSE-RADIAL LEAD1A	
⚠FZ03	1-576-729-11	FUSE-RADIAL LEAD1A	
⚠FZ04	1-576-729-11	FUSE-RADIAL LEAD1A	
		< IC >	
DIC1	1-805-039-11	IC M74HCU04	
IC301	1-804-702-11	IC (VIDEO)	
IC501	1-804-703-11	IC (HIFI)	
IC604	1-804-704-11	IC (RESET) (EXCEPT D910AZ)	
IC604	1-804-773-11	IC (RESET) (D910AZ)	
IC605	1-804-432-11	IC 524C80D81	
IC608	1-804-705-11	IC (POWER DETECT) (D910N/D910R/D910AZ)	
IC701	9-885-043-27	IC (LED DRIVER)	
IC802	9-885-036-96	IC BU4053BCFV (CMOS LOGIC)	
IC803	9-885-036-96	IC BU4053BCFV (CMOS LOGIC)	(EXCEPT D910AZ)
IC3S01	1-804-701-11	IC (SECAM) (D950B/D910B/D910R)	
IC4N01	1-805-156-11	IC MSP3417D (PQFP) (AUDIO)	
IC6P01	1-804-453-11	IC (PDC/OSD) (EXCEPT D910R/D910AZ)	
IC6P01	1-804-454-11	IC (OSD) (D910R/D910AZ)	
ICA811	1-805-028-11	IC 4560 (OP AMP) (EXCEPT D950B/D910B)	
PIC3	1-805-031-11	IC 3RD13 (V REGULATOR)	
		< LED >	
LD601	1-804-438-11	LED-IR (T/S REEL)	
LD701	9-885-043-30	LED DISPLAY (D950B/D950GI/D950E)	
LD701	9-885-043-31	LED DISPLAY	(D910E/D910B/D910N/D910R/D910AZ)
		< TRANSISTOR >	
PT601	1-804-770-11	TRANSISTOR PHOTO INTERRUPTER	
PT602	1-804-770-11	TRANSISTOR PHOTO INTERRUPTER	
Q302	1-804-421-11	TRANSISTOR KSC945	(D950B/D910B/D910R)
Q305	1-804-429-11	TRANSISTOR KSR2001	
Q351	1-804-420-11	TRANSISTOR KSA733	
Q3Q1	1-804-421-11	TRANSISTOR KSC945	
Q3Q2	1-804-421-11	TRANSISTOR KSC945	
Q3Q3	1-804-421-11	TRANSISTOR KSC945	
Q3Q4	1-804-421-11	TRANSISTOR KSC945	
Q3Q6	1-804-428-11	TRANSISTOR KSR1004	
Q3Q7	1-804-421-11	TRANSISTOR KSC945	
Q601	1-804-428-11	TRANSISTOR KSR1004	
Q802	1-804-428-11	TRANSISTOR KSR1004 (EXCEPT D910AZ)	
Q803	1-804-428-11	TRANSISTOR KSR1004 (EXCEPT D910AZ)	
Q804	1-804-429-11	TRANSISTOR KSR2001 (EXCEPT D910AZ)	
Q808	1-804-428-11	TRANSISTOR KSR1004	
Q809	1-804-421-11	TRANSISTOR KSC945 (EXCEPT D910AZ)	
Q810	1-804-421-11	TRANSISTOR KSC945	
Q811	1-804-421-11	TRANSISTOR KSC945 (EXCEPT D910AZ)	
Q812	9-885-043-26	TRANSISTOR KSR1104	
Q813	9-885-043-26	TRANSISTOR KSR1104	
Q814	1-805-016-11	TRANSISTOR KSC1623-L (EXCEPT D910AZ)	
Q815	1-805-016-11	TRANSISTOR KSC1623-L (EXCEPT D910AZ)	
Q816	1-805-016-11	TRANSISTOR KSC1623-L (EXCEPT D910AZ)	
Q880	1-804-429-11	TRANSISTOR KSR2001 (EXCEPT D910AZ)	
Q882	1-804-429-11	TRANSISTOR KSR2001 (EXCEPT D910AZ)	
Q3A01	1-804-421-11	TRANSISTOR KSC945	
Q3A02	1-804-420-11	TRANSISTOR KSA733	
Q3A03	1-804-422-11	TRANSISTOR KTC3023	
Q3A04	1-804-422-11	TRANSISTOR KTC3023	
Q3A05	1-804-422-11	TRANSISTOR KTC3023	
Q3A06	1-804-420-11	TRANSISTOR KSA733	
Q6P01	1-804-420-11	TRANSISTOR KSA733	
Q6P02	1-804-420-11	TRANSISTOR KSA733	
Q6P04	1-804-421-11	TRANSISTOR KSC945	
Q1P102	1-804-429-11	TRANSISTOR KSR2001	
Q1P103	1-804-421-11	TRANSISTOR KSC945	
Q1P105	1-804-424-11	TRANSISTOR KSC2328AY	
Q1P106	1-804-424-11	TRANSISTOR KSC2328AY	
Q1P107	1-804-424-11	TRANSISTOR KSC2328AY	
Q1P108	1-804-429-11	TRANSISTOR KSR2001	
Q1P109	1-804-421-11	TRANSISTOR KSC945	
Q1P110	1-804-424-11	TRANSISTOR KSC2328AY	
Q1P111	1-804-424-11	TRANSISTOR KSC2328AY	
QA801	1-805-016-11	TRANSISTOR KSC1623-L	
QA802	1-805-016-11	TRANSISTOR KSC1623-L	
QAA801	1-805-017-11	TRANSISTOR 200MW	
QAA802	1-805-018-11	TRANSISTOR KSR2103	
QAA803	1-805-015-11	TRANSISTOR KSA812	
QAA804	1-805-018-11	TRANSISTOR KSR2103	
QAA805	1-805-017-11	TRANSISTOR 200MW	
QAA806	1-805-016-11	TRANSISTOR KSC1623-L	
QAA807	1-805-018-11	TRANSISTOR KSR2103	
QAA808	1-805-016-11	TRANSISTOR KSC1623-L	
QAA809	1-805-017-11	TRANSISTOR 200MW	
QAV802	1-805-015-11	TRANSISTOR KSA812 (EXCEPT D910AZ)	
		< MODULE >	
RM701	1-477-308-11	REMOCON MOD (TSOP2238WE1)	
		< PHOTO TRANSISTOR >	
S601	1-804-439-11	PHOTO TRANSISTOR (END SENSOR)	
S602	1-804-439-11	PHOTO TRANSISTOR (START SENSOR)	
		< SWITCH >	
SW601	1-786-198-11	SWITCH MODE (PROGRAM SWITCH)	
SW602	1-786-199-11	SWITCH REC (REC SWITCH)	
		< TUNER >	
TM401	1-693-633-11	TUNER PAL (D950B/D910B)	
TM401	9-885-043-35	TUNER PAL (EXCEPT D950B/D910B)	

Note :
The components identified by mark ⚠ or dotted line with mark ⚠ are critical for safety.
Replace only with part number specified.

Ref. No.	Part No.	Description	Remarks
		< VIBRATOR >	
XT301	1-795-330-11	VIBRATOR CRYSTAL (4.433619MHz)	
XT601	1-795-332-11	VIBRATOR CRYSTAL (32.768kHz)	(D910AZ/D910N/D910R)
XT602	1-795-331-11	VIBRATOR CRYSTAL (8MHz)	
XT4N01	9-885-043-29	CRYSTAL (18.432MHz)	
		MISCELLANEOUS **********	
⚠200	1-823-023-11	POWER CORD KKP419C (EXCEPT D950GI)	
⚠200	1-823-025-11	POWER CORD Y352 (D950GI)	
B410	1-763-836-11	LOADING ASSY, MOTOR	
B560	1-796-432-11	MOTOR CAPSTAN	
G001	1-796-704-11	ASSY CLYNDER 6HD (SECAM)	
H104	9-885-037-20	MOTOR LOADING ASSY	
H207	9-885-037-21	MOTOR-SPINDLE	
H210	9-885-037-22	MOTOR FEED ASSY	
⚠H211	9-885-037-37	ASSY PICK UP	
H241	9-885-037-06	CABLE FLAT 24P	
		ACCESSORIES & PACKING MATERIALS **********	
	3-084-914-12	MANUAL, INSTRUCTION (FRENCH) (D910E)	
	3-084-914-22	MANUAL, INSTRUCTION (ITALIAN) (D910E)	
	3-084-914-32	MANUAL, INSTRUCTION (SPANISH)	(D910E/D950E)
	3-084-914-42	MANUAL, INSTRUCTION (GERMAN)	(D910E/D950E)
	3-084-914-52	MANUAL, INSTRUCTION (DUTCH)	(D910E/D950E)
	3-084-915-12	MANUAL, INSTRUCTION (ENGLISH) (D950GI)	
	3-084-916-12	MANUAL, INSTRUCTION (FRENCH)	(D910B/D950B)
	3-084-917-11	MANUAL, INSTRUCTION (ENGLISH) (D910N)	
	3-084-917-21	MANUAL, INSTRUCTION (POLISH) (D910N)	
	3-084-917-31	MANUAL, INSTRUCTION (HUNGARIAN) (D910N)	
	3-084-917-41	MANUAL, INSTRUCTION (CZECH) (D910N)	
	3-084-917-51	MANUAL, INSTRUCTION (RUSSIAN) (D910R)	
	3-084-918-12	MANUAL, INSTRUCTION (ENGLISH) (D910AZ)	
	9-885-043-07	COMMANDER (RMT-V503A)	(D910B/D910E/D910N/D910R/D910AZ)
	9-885-043-08	COMMANDER (RMT-V503B)	(D950B/D950E/D950GI)
	9-885-043-33	CABLE RCA (RED)	
	9-885-043-34	CABLE RCA (YEL)	

Note :
The components identified by mark ⚠ or dotted line with mark ⚠ are critical for safety.
Replace only with part number specified.

SLV-D910AZ/D910B/D910E/D910N/D910R/
D950B/D950E/D950GI

9-929-774-11

Sony Corporation
Home Storage Company

2003H0500-1
©2003. 8
Published by Customer Support Dept.