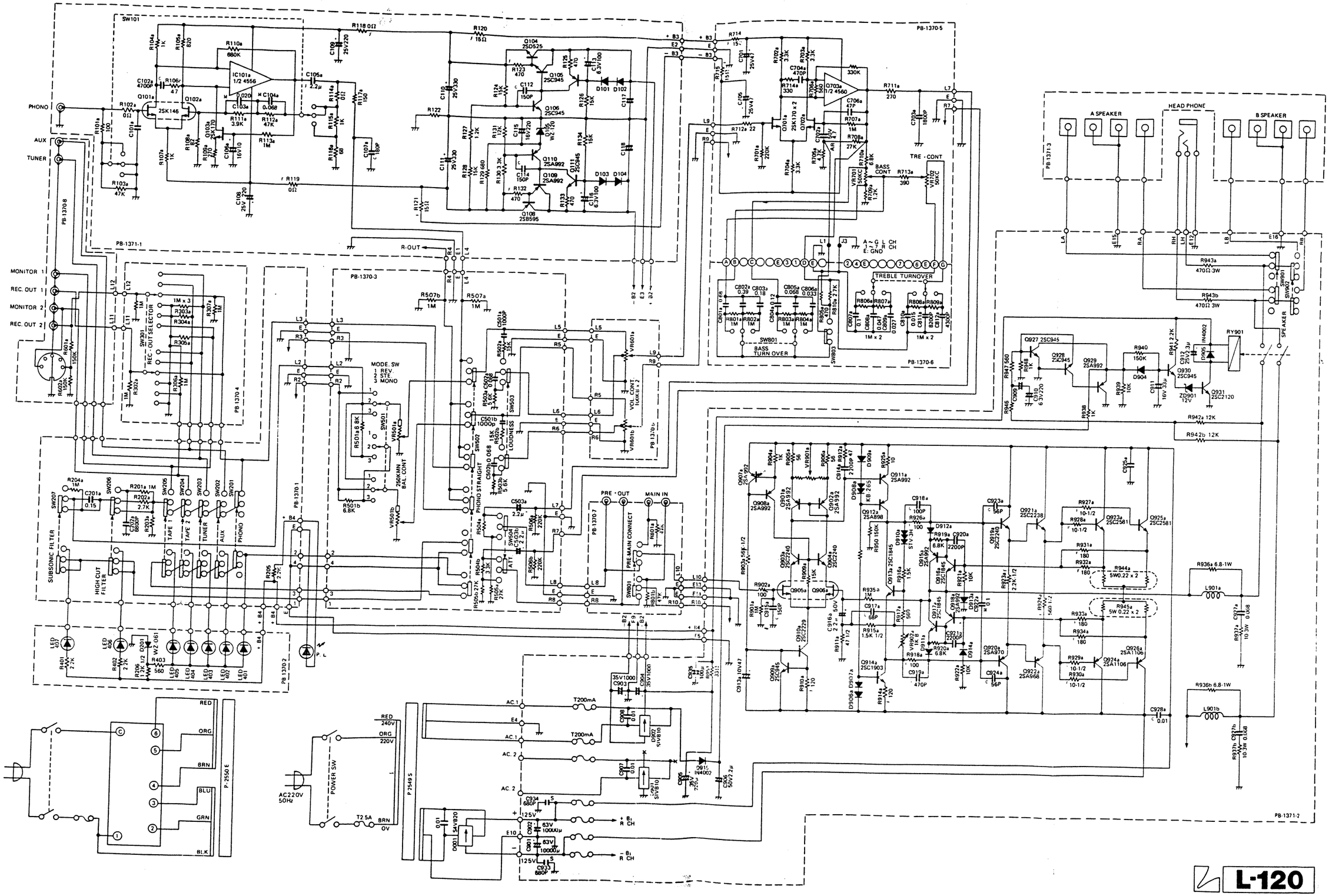

L-120

Printed in Japan