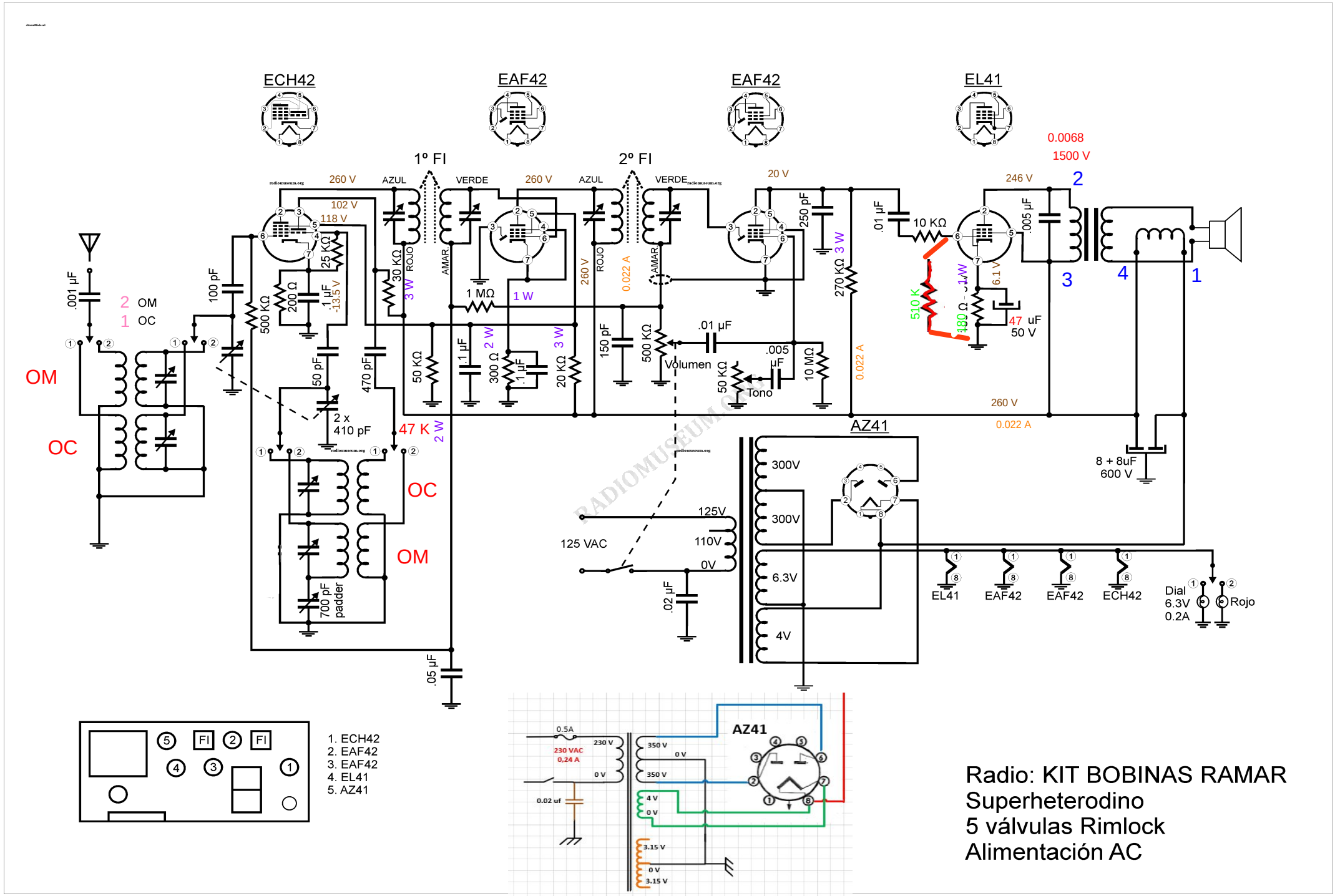


www.radiomuseum.org; upload by Mario Berta; download by Domenec torra Tue Sep 18 01:19:42 CEST 2018 [5936 x 4198, 53kB]