AIWA®

SERVICE MANUAL

DATE OF ISSUE 9/1981

Code No. 15-800-000-18

FM/MW/LW STEREO TUNER

MODEL NO. ST-R80E,K

Code No. 16-800-000-18

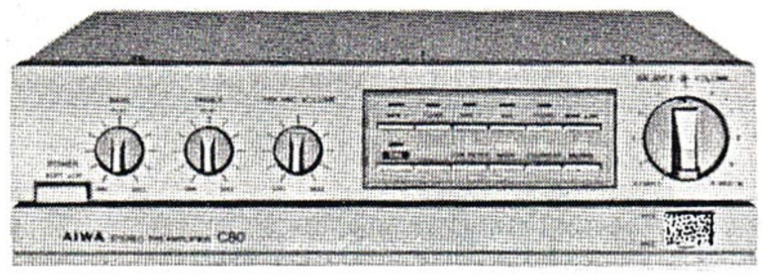

STEREO INTEGRATED AMPLIFIER

MODEL NO. SA-C80E,K

Code No. 17-800-000-18

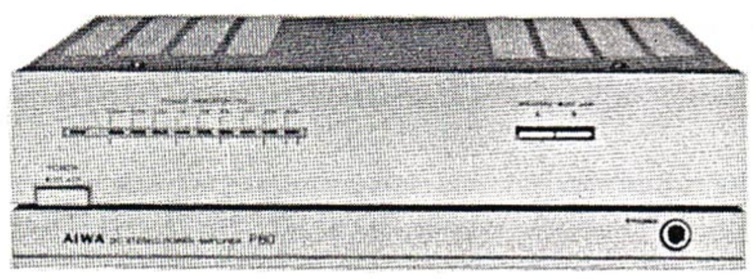

DC STEREO POWER AMPLIFIER

MODEL NO. SA-P80E,K

www.hifiengine.com

SPECIFICATIONS = ST-R80E,K

≪ GENERAL ≫

Semiconductors:	15 ICs, 1 FET, 43 transistors, 53 diodes, 17 LEDs
Power source:	E model AC 220V, 50/60 Hz K model AC 240V, 50/60 Hz
Power consumption:	8W
Dimensions:	250(W) x 71(H) x 281(D) mm
Weight:	2.2 kg

≪ FM TURNER SECTION ≫

Frequency ranges:	87.5 ~ 108.0 MHz
Intermediate frequency:	10.7 MHz
IHF sensitivity: (THD 3%)	7 ± 2 dB (at 88.0, 98.0, 108.0 MHz)
50 dB quieting sensitivity:	35 ± 3 dB (at 98.0 MHz)
Image frequency interference ratio:	More than 65 dB (at 98.0 MHz)
Intermediate frequency interference ratio:	More than 85 dB (at 98.0 MHz)
SN ratio: (Weighted)	E model: 73 ± 5 dB (at 88 MHz) 75 ± 5 dB (at 98, 108 MHz) K model: 75 ± 4 dB (at 88 MHz) 77 ± 4 dB 9(at 98, 108 MHz)
Total harmonic distortion: (input level 60 dB)	Less than 0.15% (at 98.0 MHz)
AM suppression ratio:	More than 50 dB (at 98.0 dB)
Muting response:	25 ± 10 dB (at 98.0 dB)
Effective selectivity:	More than 65 dB (at 98.0 MHz)
Capture ratio:	More than 2.5 dB (at 98.0 MHz)
Frequency response:	30 Hz ~ 15 kHz (0 $^{+0.5}_{-2.0}$ dB)
Separation:	More than 45 dB (at 1 kHz)
Auto scanning level:	Less than 30 $^{+10}_{-5}$ dB (at 98.0 MHz)

≪ AM TURNER SECTION ≫

Frequency ranges:	MW: 522 ~ 1,611 kHz LW: 155 ~ 353 kHz
Intermediate frequency:	450 kHz
Noise limit sensitivity: (S/N 20 dB, bar antenna)	MW: Less than 57 dB (at 603 kHz) Less than 55 dB (at 999, 1403 kHz) LW: Less than 67 dB (at 155 kHz) Less than 65 dB (at 200, 353 kHz)
Image frequency interference ratio:	MW: More than 50 dB (at 999 kHz) LW: More than 40 dB (at 200 kHz)
Intermediate frequency interference ratio:	More than 32 dB (at 999 kHz)
Selectivity: (±9 kHz)	More than 40 dB (at 999 kHz)
Total harmonic distortion:	MW: Less than 1.0% (at 999 kHz) LW: Less than 1.5% (at 200 kHz)
AGC characteristic:	More than 45 dB
SN ratio:	MW: More than 40 dB (74 dB input) LW: More than 36 dB (106 dB input)
Auto scanning level:	MW: 55 ± 8 dB LW: 72 ± 8 dB

SPECIFICATIONS = SA-C80

Semiconductors:	3 ICs, 14 transistors, 17 diodes, 6 LEDs	
Power source:	220V (E model) 240V (K model) 50/60 Hz	
Power consumption:	8W	
Dimensions:	250(W) x 71(H) x 246(D)mm	
Weight:	2.2 kg	
S/N ratio: (Weighted)	PHONO (MM)	More than 88 dB
	PHONO (MC)	More than 71 dB
	TUNER, AUX, TAPE	More than 98 dB
Distortion:	Less than 0.008% (20 Hz ~ 20 kHz)	
Frequency response:	10 ~ 100,000 Hz (–3 dB)	
Tone controls:	BASS 50 Hz	+10 ± 1 dB –10 ± 1 dB
	TREBLE 20 kHz	+8 ± 1 dB –8 ± 1 dB
Loudness:	100 Hz	+6.5 ± 1 dB
	10 kHz	+6.5 ± 1 dB
Low filter:	30 Hz	–3 ± 1 dB
DSL: (400 Hz, –40 dB)	I: +10 ± 1.5 dB II: +20 ± 1.5 dB	
Channel separation:	More than 55 dB	
RIAA deviation:	±0.2 dB (20 Hz ~ 20 kHz)	
Input sensitivity and impedance:	PHONO (MM)	2.5 mV/47 kΩ (200 mV max input)
	PHONO (MC)	0.25 mV/100 Ω
	TUNER AUX, TAPE	150 mV/47 kΩ
Tape monitor:	PLAY	150 mV/47 kΩ
	RECORD	150 mV/47 kΩ
Output level:	1V ± 1 dB (PHONO 2.5 mV in) 1V ± 1.5 dB (TUNER, AUX, TAPE 150 mV in)	

SPECIFICATIONS = SA-P80

Semiconductors:	4 ICs, 2 FETs, 14 transistors, 27 diodes, 10 LEDs
Power source:	220V (E model) 240V (K model) 50/60 Hz
Power consumption:	280W
Dimensions:	250(W) x 71(H) x 250.5(D) mm
Weight:	4.6 kg
Power output:	50W + 50W (8Ω, 0.006% distortion, 20Hz ~ 20 kHz)
Distortion: (1 kHz, 10W)	Less than 0.005%
S/N ratio: (1 kHz, IHF A curve)	More than 113 dB
Damping factor:	More than 50 (8Ω, 1 kHz)
Input sensitivity:	0.5 ± 1.0 dB (1 kHz, 50W)
Frequency response:	10 ~ 100,000 Hz ($^{+0}_{-3}$ dB)
Power bandwith:	10 ~ 50,000 Hz (Distortion: 0.03%)
Residual noise:	Less than 0.4 mV
Output voltage:	PHONES More than 0.89 mW ± 1 dB

- Specifications and external appearance are subject to change without notice due to product improvement.

www.hifiengine.com

☆ ☆ ☆ ☆ ☆ ☆ ☆ ☆ ☆ ☆ ☆ ☆ ☆ ☆ ☆ **MEMO** ☆ ☆ ☆ ☆ ☆ ☆ ☆ ☆ ☆ ☆ ☆ ☆ ☆ ☆

www.hifiengine.com

EXPLODED VIEW

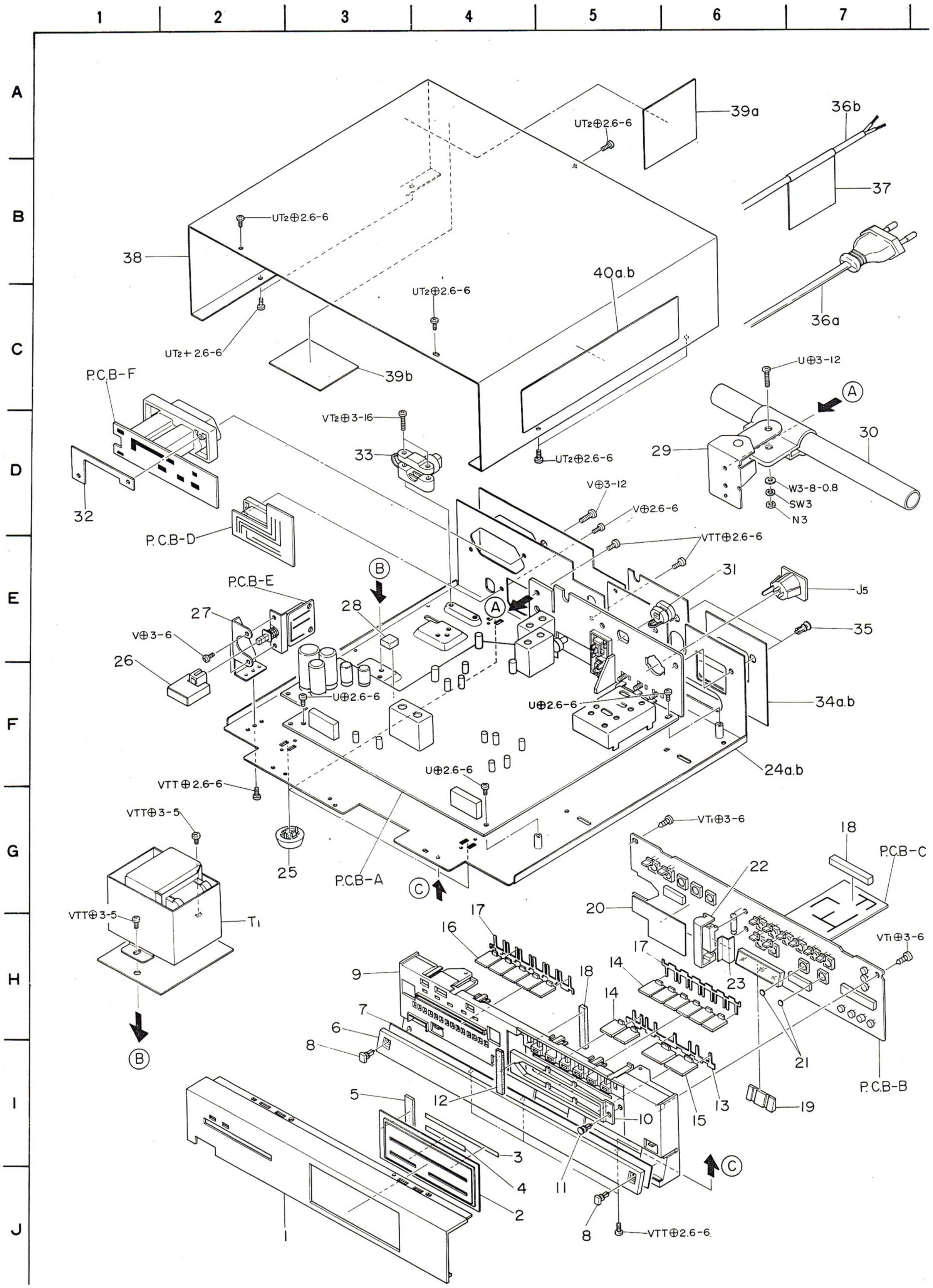

www.hifiengine.com

PARTS LIST

MECHANICAL PARTS

■ * mark in this part list shows exclusive part.

Ref. No.	Part No.	Part No. Changed to	Description	Common Model	Q'ty
1-1	82-779-003-01		Panel, Front E	*	1
1-2	82-779-009-01		Control plate A	*	1
1-3	82-779-215-01		Filter A	*	1
1-4	82-779-221-01		Filter B	*	1
1-5	82-780-217-01		Cushion	SA-C80	1
1-6	82-779-012-01		Window	*	1
1-7	82-779-013-01		Plate	*	1
1-8	82-769-010-01		Nylon rivet ass'y	ST-R35	2
1-9	82-779-001-01		Cabinet, Front	*	1
1-10	82-779-008-01		Guide A, Panel	*	1
1-11	87-084-072-01		Nylon rivet 3.5 — 7		1
1-12	82-780-217-01		Cushion	SA-C80	1
1-13	82-779-211-01		Plate spring A	*	1
1-14	82-779-006-01		Push-key	*	8
1-15	82-729-011-01		Push-key (UP DOWN)		2
1-16	82-779-007-01		Push-key	*	5
1-17	82-729-212-01		Plate spring B	*	1
1-18	82-748-208-01		Cushion	SA-C50	2
1-19	82-779-209-01		Spacer	*	1
1-20	82-779-626-01		Shield plate ass'y	*	1
1-21	82-779-209-01		Spacer	*	2
1-22	82-780-212-01		Holder, Lamp	SA-C80	1
1-23	82-780-214-01		Reflector paper	SA-C80	1
1-24a	82-779-204-01		Amp. chassis E ass'y (E model only)	*	1
1-24b	82-779-206-01		Amp. chassis K ass'y (K model only)	*	1
1-25	82-745-019-01		Foot		4
1-26	82-780-008-01		Push-button C	SA-C80	1
1-27	82-779-210-01		Holder, POWER	*	1
1-28	82-157-226-01		G cushion	SD-L50	1
1-29	82-757-009-01		Antenna holder ass'y	ST-R10	1
1-30	82-779-611-01		Bar antenna E	*	1
1-31	87-085-182-01		Cord bushing B		1
1-32	82-773-216-01		Leaf nut E (E model only)	AT-9500	1
1-33	87-085-166-01		Holder, AC power cord		1
1-34a	82-779-015-01		Jack plate (E model only)	*	1
1-34b	82-779-016-01		Jack plate (K model only)	*	1
1-35	87-085-102-01		Nylon rivet 3.5 — 5.5		2
1-36a	87-034-877-01		AC power cord E (E model only)		1
1-36b	87-034-872-01		AC power cord BS (K model only)		1
1-37	87-056-008-01		Label, AC power cord (K model only)		1
1-38	82-779-005-01		Cabinet, Steel	*	1
1-39a	82-748-214-01		Insulation sheet (E model only)	SA-C50	1
1-39b	82-748-237-01		Insulation sheet (K model only)	SA-C50	1
1-40a	82-779-021-01		Name plate, Spec. E (E model only)	*	1
1-40b	82-779-022-01		Name plate, Spec. K (K model only)	*	1

www.hifiengine.com

EXPLODED VIEW

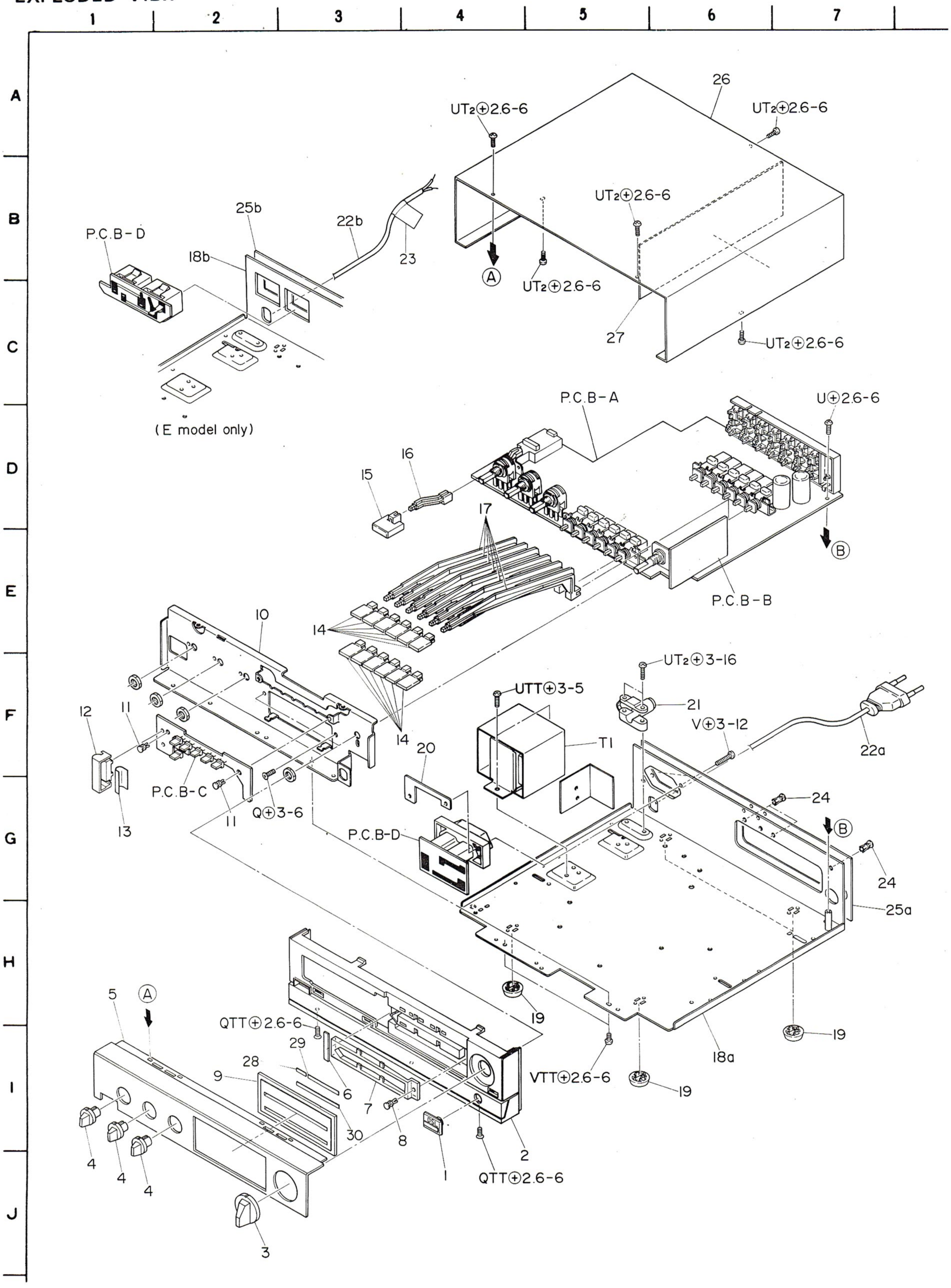

www.hifiengine.com

PARTS LIST

MECHANICAL PARTS

■ * mark in this part list shows exclusive part.

Ref. No.	Part No.	Part No. Changed to	Description	Common Model	Q'ty
1-1	82-780-024-01		Badge, DSL	*	1
1-2	82-780-001-01		Cabinet, Front	*	1
1-3	82-780-004-01		Knob	*	3
1-4	82-780-013-01		Knob B, Volume	*	1
1-5	82-780-003-01		Panel E, Front	*	1
1-6	82-780-217-01		Cushion	*	1
1-7	82-780-009-01		Light guide B, Panel	*	1
1-8	87-084-072-01		Nylon rivet 3.5 –7		1
1-9	82-780-010-01		Control plate B	*	1
1-10	82-780-201-01		Chassis, Front	*	1
1-11	87-085-102-01		Nylon rivet 3.5 – 5.5		2
1-12	82-780-212-01		Holder, Lamp	*	1
1-13	82-780-214-01		Reflector paper		1
1-14	82-780-007-01		Push-button	*	12
1-15	82-780-008-01		Push-botton	*	1
1-16	82-780-210-01		Rod, POWER	*	1
1-17	82-780-211-01		Rod B	*	6
1-18a	82-780-205-01		Amp. chassis E (E model only)	*	1
1-18b	82-780-207-01		Amp. chassis K (K model only)	*	1
1-19	82-745-019-01		Foot		4
1-20	82-773-216-01		Leaf nut E (E model only)		1
1-21	87-085-166-01		Holder, AC power cord		1
1-22a	87-034-877-01		AC power cord EE (E model only)		1
1-22b	87-034-872-01		AC power cord BS (K model only)		1
1-23	87-056-008-01		Lavel, AC power cord		1
1-24	87-085-102-01		Nylon rivet 3.5 – 5.5		3
1-25a	82-780-015-01		Jack plate E (E model only)	*	1
1-25b	82-780-022-01		Jack plate K (K model only)	*	1
1-26	82-780-012-01		Cabinet, Steel	*	1
1-27	82-748-633-01		Shild plate		1
1-28	82-180-259-01		Filter, REC		1
1-29	82-780-221-01		Filter B	*	1
1-30	82-780-222-01		Filter C	*	1

www.hifiengine.com

EXPLODED VIEW

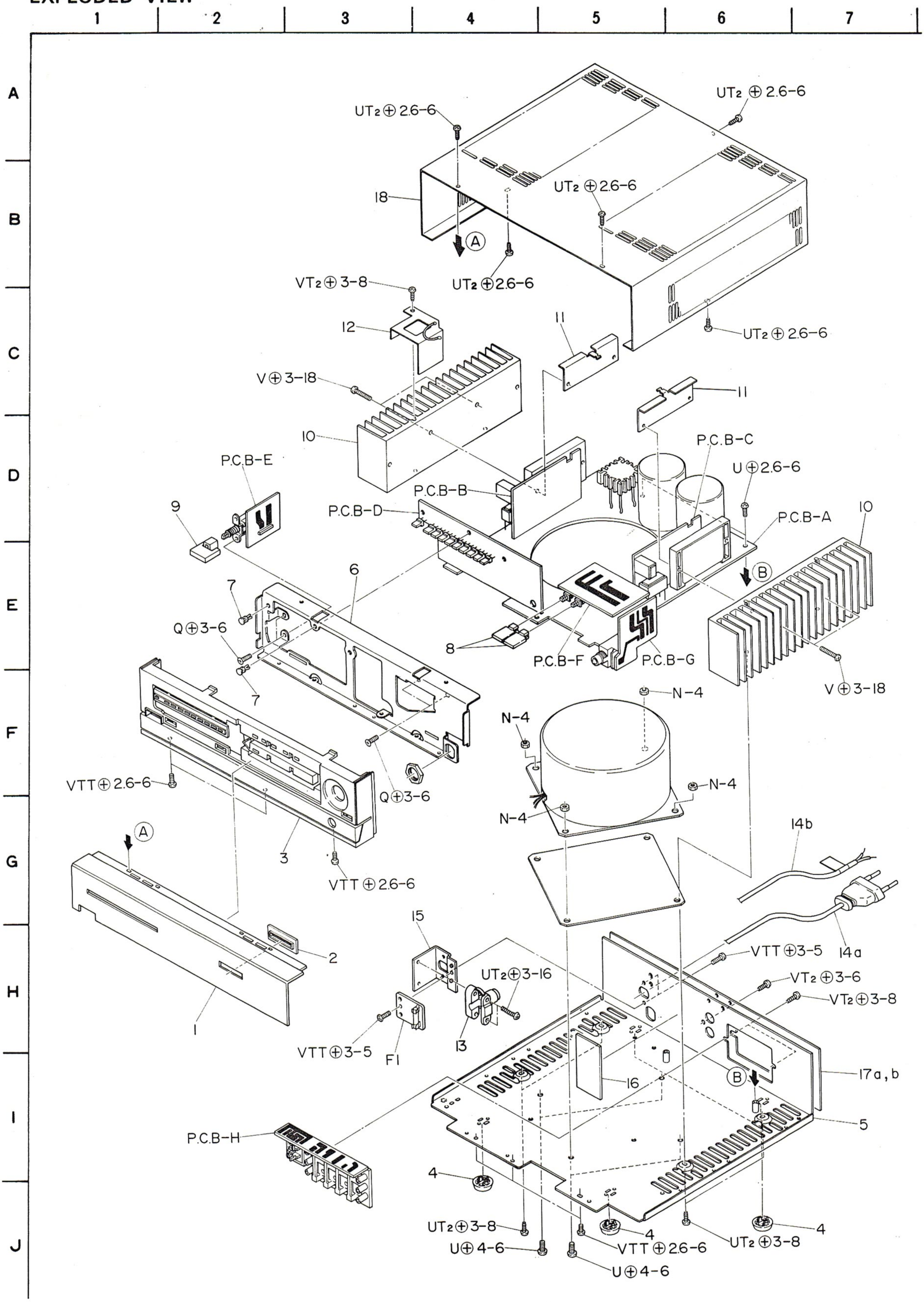

www.hifiengine.com

PARTS LIST

MECHANICAL PARTS

■ * mark in this part list shows exclusive part.

Ref. No.	Part No.	Part No. Changed to	Description	Common Model	Q'ty
1-1	82-781-002-01		Panel E, Front	*	1
1-2	82-781-005-01		Guide, Button	*	1
1-3	82-781-010-01		Cabinet, Front	*	1
1-4	82-745-019-01		Foot		4
1-5	82-781-203-01		Chassis D, Amp.	*	1
1-6	82-781-201-01		Chassis, Front	*	1
1-7	87-084-077-01		Nylon rivet 3.5 – 4.5		2
1-8	82-781-004-01		Push-botton	*	2
1-9	82-780-008-01		Push-botton C		1
1-10	82-781-621-01		Heat sink E	*	2
1-11	82-781-206-01		Leaf nut	*	2
1-12	82-781-607-01		Shield plate	*	1
1-13	87-085-166-01		Holder, AC power cord		1
1-14a	87-034-941-01		AC power cord (E model only)		1
1-14b	87-034-942-01		AC power cord (K model only)		1
1-15	82-499-208-01		Holder A, AC power cord		1
1-16	82-499-210-01		Insulation sheet		1
1-17a	82-781-008-01		Jack plate (E model only)	*	1
1-17b	82-781-009-01		Jack plate (K model only)	*	1
1-18	82-781-003-01		Cabinet, Steel	*	1

www.hifiengine.com

ACCESSORIES/PACKAGE =ST-R80E,K

Ref. No.	Part No.	Part No. Changed to	Description	Common Model	Q'ty	
1	82-779-855-01		Printed indiv., Packing	*	1	
2	82-779-852-01		Cushion L, Printed indiv.	*	1	
3	82-779-853-01		Cushion R, Printed indiv.	*	1	
4	87-056-604-01		Poly-vinyl sack (for case)		1	
5a	82-779-901-01		Instructions booklet (E model only)	*	1	
5b	82-779-902-01		Instructions booklet (K model only)	*	1	
6	87-051-135-11		Poly-vinyl sack (for AC power cord)		1	
7	87-051-171-11		Poly-vinyl sack (for instruction)		1	
8	87-056-009-41		Distributors list		1	
9	86-944-016-01		Connection cord, CW-129DSK		1	
10	87-043-051-01		FM feeder antenna		1	
11	87-056-008-01		Label, AC power cord (K model only)		1	

ACCESSORIES/PACKAGE=SA-C80E,K

Ref. No.	Part No.	Part No. Changed to	Description	Common Model	Q'ty	
1	82-780-851-01		Printed indiv., Packing	*	1	
2	82-779-852-01		Cushion L, Printed indiv.	ST-R80	1	
3	82-779-853-01		Cushion R, Printed indiv.	ST-R80	1	
4	87-051-135-11		Poly-vinyl sack (for AC power cord)		1	
5	87-056-604-01		Poly-vinyl sack (for case)		1	
6a	82-780-901-01		Instructions booklet (E model only)	*	1	
6b	82-780-902-01		Instructions booklet (K model only)	*	1	
7	87-056-008-11		Label, AC power cord (K model only)		1	
8	87-051-171-11		Poly-vinyl sack (for instruction)		1	
9	87-056-009-41		Distributors list		1	

ACCESSORIES/PACKAGE=SA-P80E,K

Ref. No.	Part No.	Part No. Changed to	Description	Common Model	Q'ty	
1	82-781-855-01		Printed indiv., Packing	*	1	
2	82-781-852-01		Cushion L, Printed indiv.	*	1	
3	82-781-853-01		Cushion R, Printed indiv.	*	1	
4	87-051-135-11		Poly-vinyl sack (for AC power cord)		1	
5	87-056-604-01		Poly-vinyl sack (for case)		1	
6a	82-781-901-01		Instructions booklet (E model only)	*	1	
6b	82-781-902-01		Instructions booklet (K model only)	*	1	
7	87-051-171-01		Poly-vinyl sack (for instruction)		1	
8	87-056-008-11		Label, AC power cord (K model only)		1	
9	87-056-009-41		Distributors list		1	
10	86-944-016-01		Connection cord CW-129DSK		1	

www.hifiengine.com

☆ ☆ ☆ ☆ ☆ ☆ ☆ ☆ ☆ ☆ ☆ ☆ ☆ ☆ ☆ **MEMO** ☆ ☆ ☆ ☆ ☆ ☆ ☆ ☆ ☆ ☆ ☆ ☆ ☆ ☆

www.hifiengine.com

ELECTRICAL MAIN PARTS LIST =ST-R80E, K

Symbol No.	Part No.	Description
≪TUNER CIRCUIT BOARD SECTION≫		
PCB-A	*	Tuner circuit board
CP1	82-769-605-11	FM front end U. M
IC1	82-494-791-01	IC, HA11211
IC2	87-027-576-01	IC, HA12016
IC3	87-027-752-01	IC,μPD553AC
IC4	87-017-656-01	IC, TC4066BP
Q101	89-391-233-01	Transistor, 2SC1923(O)
Q102,103 106,112 114,115 116,117, 119,120, 121,122, 124,126, 127,128, 129,130, 131,132, 133	89-318-154-01	Transistor, 2SC1815(Y)
Q104,105	89-320-014-01	Transistor, 2SC2001(K,S)
Q107	89-318-155-01	Transistor, 2SC1815(GR)
Q108,118	89-110-154-01	Transistor, 2SA1015(Y)
Q110	89-303-803-01	Transistor, 2SC380(O)
Q111	89-303-804-01	Transistor, 2SC380(Y)
Q113	89-500-304-01	FET, 2SK30A(Y)
Q123,125	89-403-135-01	Transistor, 2SD313(E)
D1,2,3,4, 5,6,7,8, 11,12,15, 16,17,18, 19,20,26, 27,28,29	87-027-097-01	Diode, 1S1555
D9,10	82-769-617-01	Diode, KV-1236Z-2
D13,14	88-051-188-11	Diode, 1S188(FM)
D21	87-027-332-01	Zener diode, HZ6B1L
D22,23,24 25	87-027-365-01	Diode, S5277B
L1	87-003-050-01	Choke coil, 47μH
L4	82-775-607-01	MW OSC coil
L5	82-755-608-01	LW OSC coil
CF1,2,3	87-008-239-01	Ceramic filter, Kit E (E model only)
CF1,2,3	87-008-244-01	Ceramic filter, Kit K (K model only)
CF4	87-008-225-01	Ceramic filter, SFP4501
TC1	87-011-109-01	Trimmer, 15P
TC2	87-011-131-01	Trimmer, 30P
IFT1	82-742-641-01	FM quad coil
IFT2	87-008-241-01	AM IFT, 450S
IFT3	87-008-160-01	AM IFT (DET)
LPF1,2	82-773-621-01	Low-pass filter
J1,2,5	82-769-602-01	Jack plate ass'y (OUTPUT, ANT) (E model only)
J1,2,5	82-769-603-01	Jack plate ass'y (OUTPUT, ANT) (K model only)
SFR1	87-021-689-01	Semi-fixed resistor, 47kΩ-B
SFR2	87-021-571-01	Semi-fixed resistor, 200kΩ-B
SFR3	87-021-566-01	Semi-fixed resistor, 5kΩ-B
PIN3	87-049-050-01	Pin, 6P
CON-2	87-032-967-01	Pin, 7P
CON-1	87-032-968-01	Pin, 8P

Symbol No.	Part No.	Description
		< Capacitors >
C283	87-014-042-01	240pF PP
C251	87-014-049-01	470pF PP
C224,225,226	87-014-057-01	1,000pF PP
C280	87-014-063-01	1800pF PP
≪FRONT CIRCUIT BOARD SECTION≫		
PCB-B	*	Front circuit board
IC1	87-027-824-01	IC, μPD1703C-521
IC2	87-027-426-01	IC, IR-2403
IC3,4,5	87-027-768-01	IC, HD74LS74P
IC6	87-027-802-01	IC, HD74LS175P
IC7	87-027-791-01	IC, HD74LS138P
IC8	87-027-261-01	IC, LB-1405
Q1,4,6,7 9,11,12	89-318-154-01	Transistor, 2SC1815(Y)
Q2,3,5,8,10	89-319-594-01	Transistor, 2SC1959(Y)
Q13	89-406-363-01	Transistor, 2SD636(Q)
D1,2,3	87-027-393-01	Zener diode, HZ 4C2
D4,5,6,7,8, 9,10,11,13, 14,15,16,17 18,19	87-027-097-01	Diode, IS1555
D21	87-027-823-01	LED, 2063K-01K
D22,23,37,	87-027-543-01	LED, LN317GP
D24,25,26 27, 28,29 30, 31	87-027-542-01	LED, LN217RP
D32,33,34, 35,36	87-027-544-01	LED, LN05202P
D34,35,37	87-027-543-01	LED, LN317GP
LI	87-005-121-01	Choke coil, 2,2μH
L2	87-003-051-01	Choke coil, 470μH
XI	82-769-613-01	Crystal, 4.5MHz
S1,2,3,4,5, 6,7,8,9,10, 11,12,13,14, 15	87-031-665-01	Light tact switch (MUTING, HI-BLEND, LW, MW, FM, MEMO, AUTO/MANU DOWN, UP, PRE-SET CHANNEL 1,2,3,4,5,6)
		< Resistors >
R28-1,28-2 28-3,28-4	82-769-640-01	Resistor block 56kΩx4
		< Capacitors >
C16,18	87-015-695-01	1μF 50V Electrolytic
C12,26	87-015-696-01	2,2μF 50V Electrolytic
C19	87-015-598-01	4,7μF 50V Electrolytic
C6	87-015-896-01	220μF 6.3V Electrolytic
≪ SUB CIRCUIT BOARD SECTION ≫		
PCB-C	*	Sub circuit board
IC1,2,3	87-027-429-01	IC, TC4016BP
D1,2,3,4,5 6,7,8	87-027-097-01	Diode, IS1555
PIN5	87-032-642-01	Pin, 12P
≪ JACK CIRCUIT BOARD SECTION ≫		
PCB-D	*	Jack circuit board
J3	87-049-064-01	Connector ass'y 16P (REMOTE)
PIN4	97-049-068-01	Pin, 3P
≪ SWITCH CIRCUIT BOARD SECTION ≫		
PCB-E	*	Switch circuit board
⚠ S16	82-769-612-01	Push-switch (POWER)

www.hifiengine.com

SCHEMATIC DIAGRAM

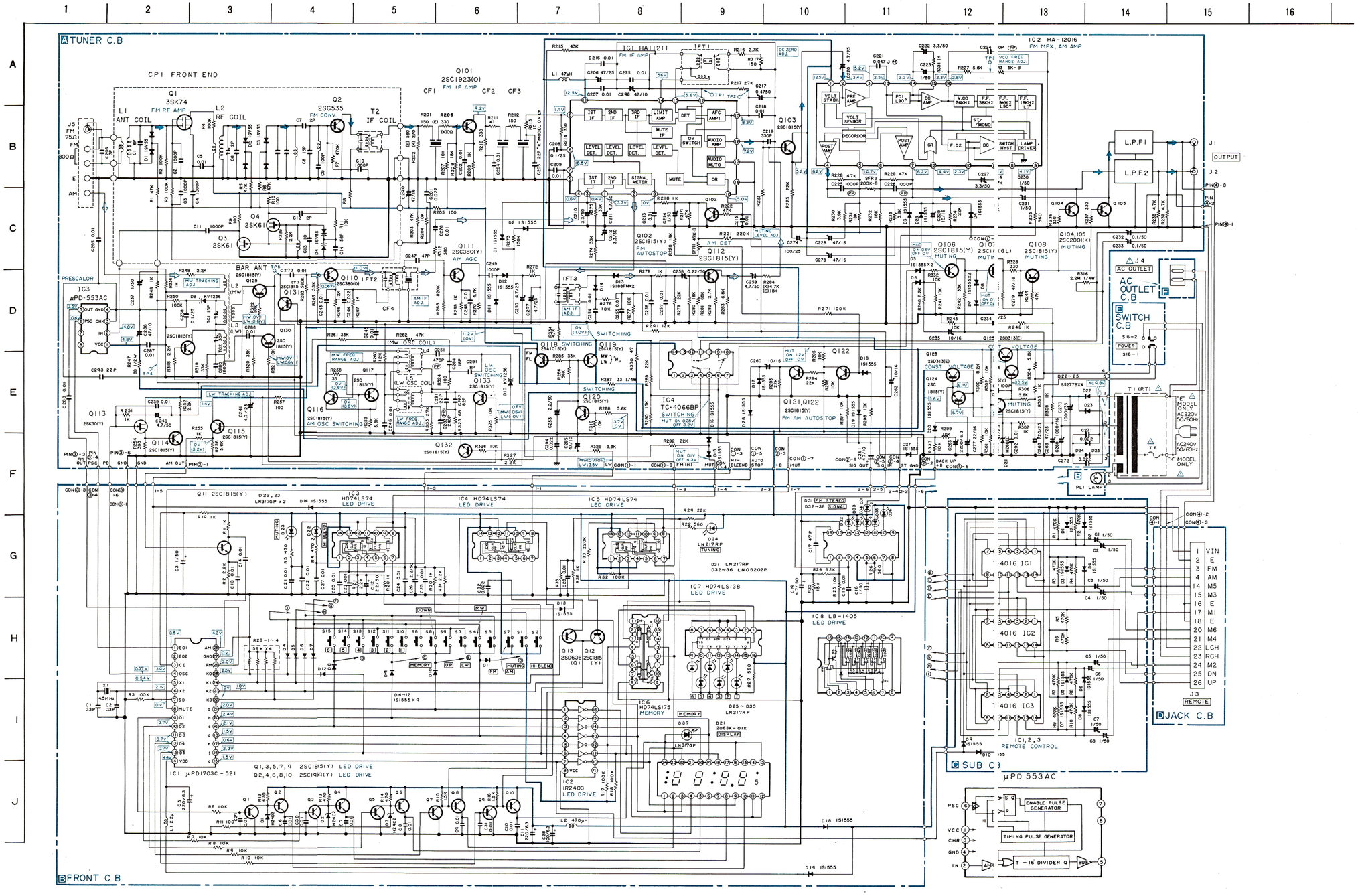

NOTES:

1) B (+) power supply
2) Signal path
   AM signal path.
3) The voltage is the reference value measured with a tester (20 k-ohms/V DC) when there are no signals. But ( ) is with AM reception
4) Resistors with no designation have a rated power of 1/4W and a tolerance of ±5%.
5) Capacitors with no designation have a dielectirc strneght of less than 50WV.
6) The only capacitor tolerance indicated are ±5% (J) and ±10% (K).
7) Ceramic capacitor symbols:
   For temperature compensation (SL)
   High dielectric constant system (YY)
   High dielectric constant system (YW, YP, YZ)
   Semiconductor ceramic
8) Explanation of symbols
   (M) Mylar capacitor
   (PP) Polypropylene film capacitor
   Fuse resistor
   Nonflammable resistor

⚠ Safety component symbol
This symbol is given to important parts which serve to maintain the safety of the product, and which are made to conform to special safety specifications. Therefore, when replacing a component with this symbol, make absolutely sure that you use a designated part.

- This schematic diagram is subject to change without notice in the interests of improved performance.

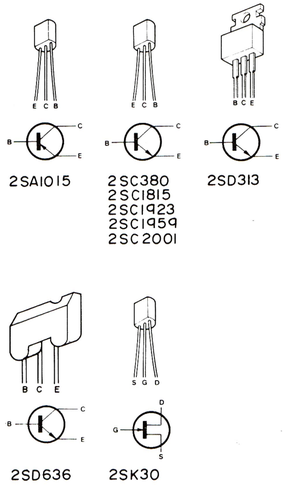

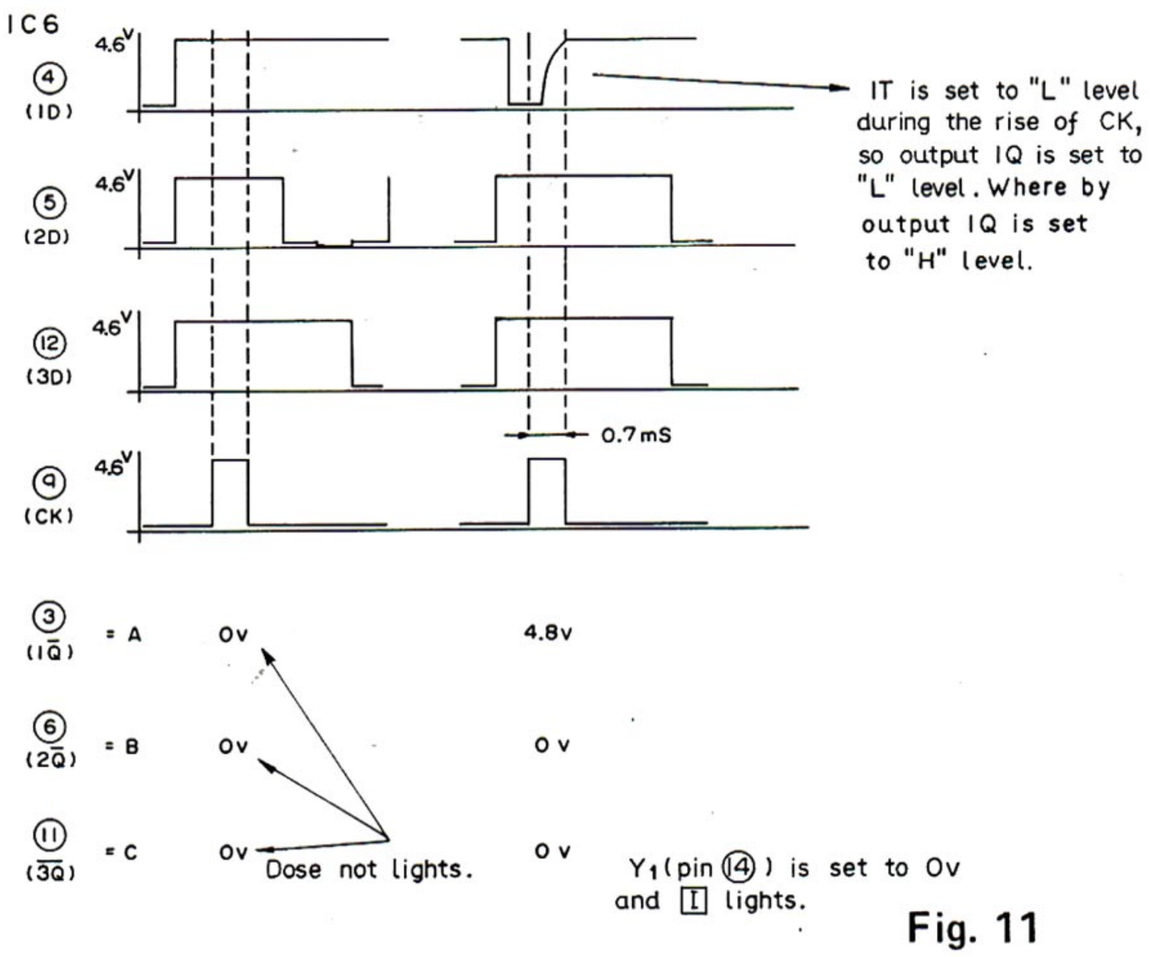

Fig. 11

Repairing

The difficulty of repairing the synthesizer tuner is that a no variable capacitor is provided, so whether the controller or radio is wrong cannot be judged easily.
The following troubleshooting method is convenient:

Cutting off muting

It is recommended to cut off muting by removing R244 (47 kΩ).

Applying tuning voltage from outside

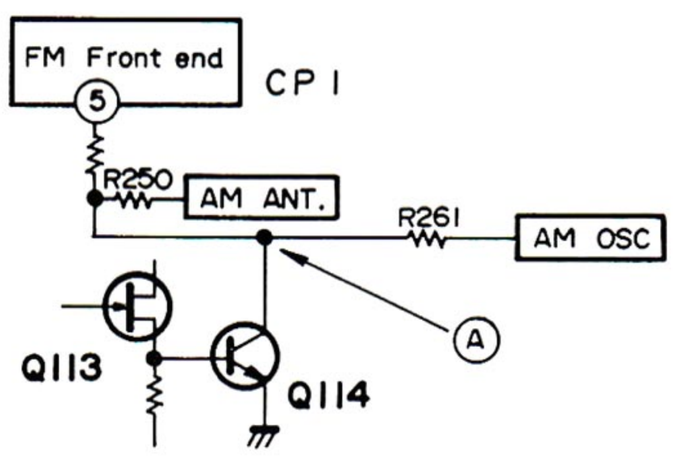

Fig. 12

It is designed so that tuning is possible by means of the voltage change (approx. 1.5 V ~ 7.0 V) at point A (figure 12) in both FM and AM.

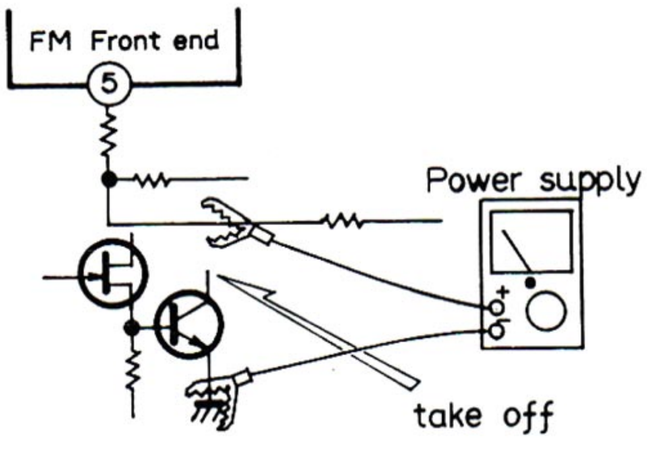

Fig. 13

Supply the voltage from outside after detaching Q114 collector as shown in Figure 13.
The redio section is normal when reception is possible (see controller section).
When no noise occurs, the radio can be judged to be out of order.

Reference value at point A
87.5 MHz . . . . . approx. 1.5 V
954 kHz . . . . . approx. 3.9 V

Model SA-C80

7. DSL I/II selection

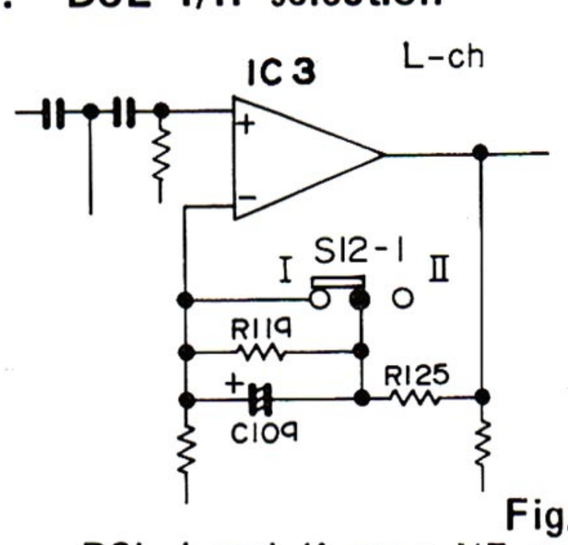

Fig. 14

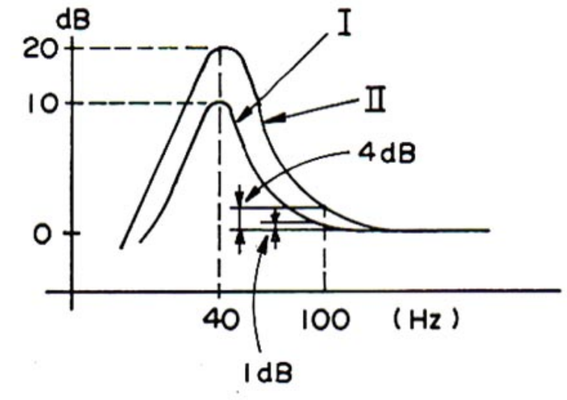

Fig. 15

DSL I and II are : NF amount and frequency response are changed as shown in the figure 14, and overall differences as about 40 Hz and 100 Hz are as shown in figure 15.

Model SA-P80

8. Protection circuit when over-current is applied

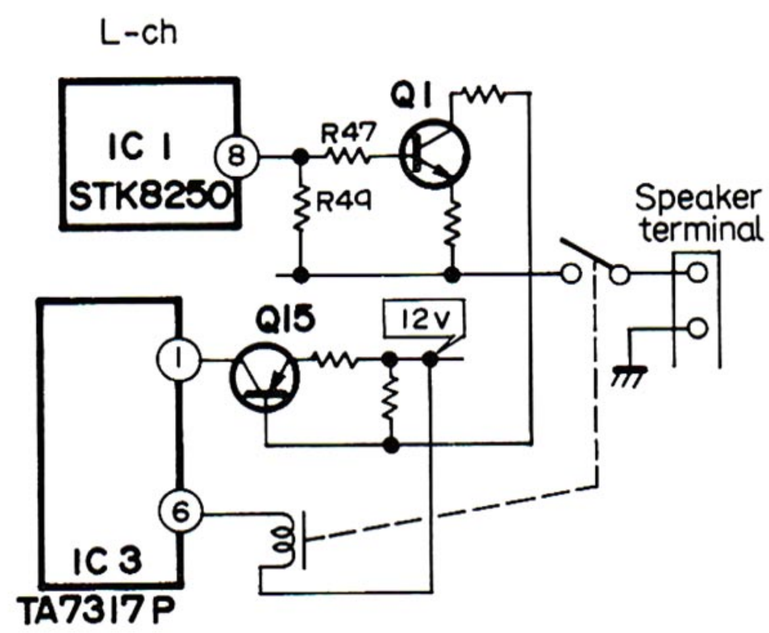

Fig. 16

When an accident such as the speaker terminals being level short-circuited with GND, a potential difference occurs between Q11 base and emitter, so Q11 is set to ON, Q15 to ON and 0.75 V is applied to IC3 pin 1 and the relay is released.

www.hifiengine.com

2. AUTO/MANUAL selection

2-1 AUTO/MANUAL section

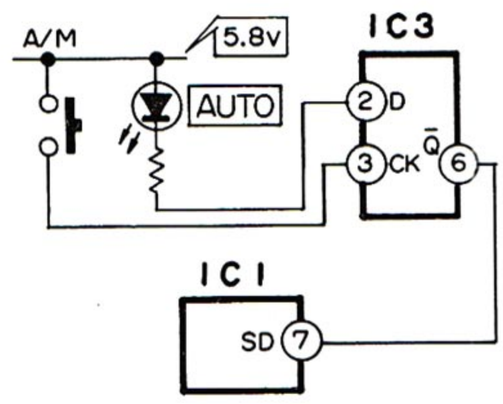

Fig. 5

IC3 pin 6 is set to 0 V when power is supplied and the AUTO: indicator lamp lights. When the AUTO/MANUAL botton is pressed next, since IC3 is the D flip-flop, pin 6 is set to 4.4 V, the "AUTO" indicator lamp goes off and at the same time 4.0 V is applied to IC1 pin 7 so that manual tuning becomes possible.

2 Auto stop

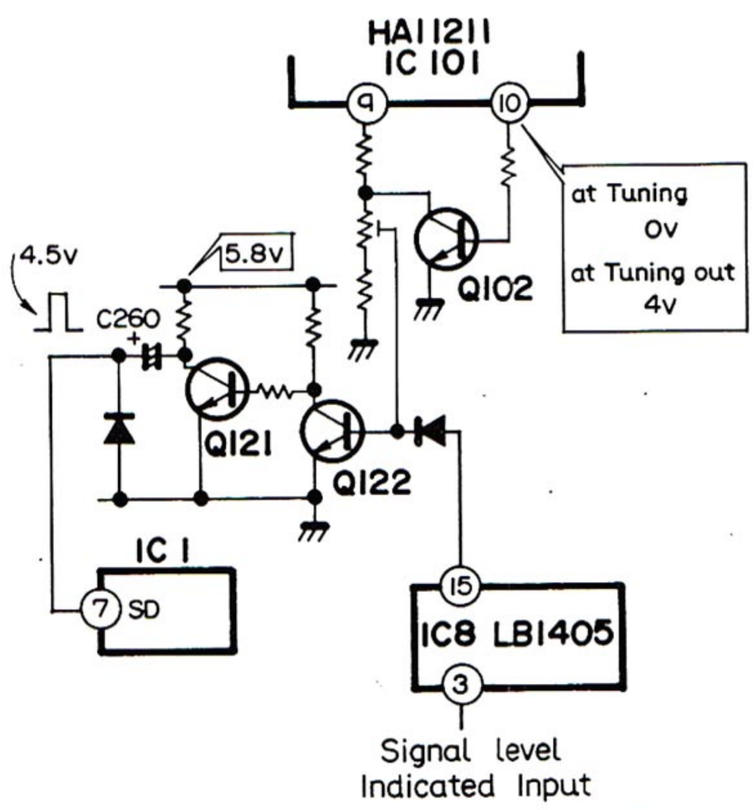

Fig. 6

When set to auto tuning, IC101 (HA11211) pin 10 is set to 0 V, so Q102 is OFF and the following operation is done by the output of pin 9 .
When the sum of the output of IC101 pin 9 and IC8 (signal elevel indicator IC) is sufficient, Q122 is set to ON, Q121 to OFF and a pulse is generated at C260 and applied to IC1 pin 7 , and Auto-stop is applied.
The voltage at this pin 7 is 1 ~ 3 V measured by a tester when it is tuned.

Muting circuit

1 During button operation

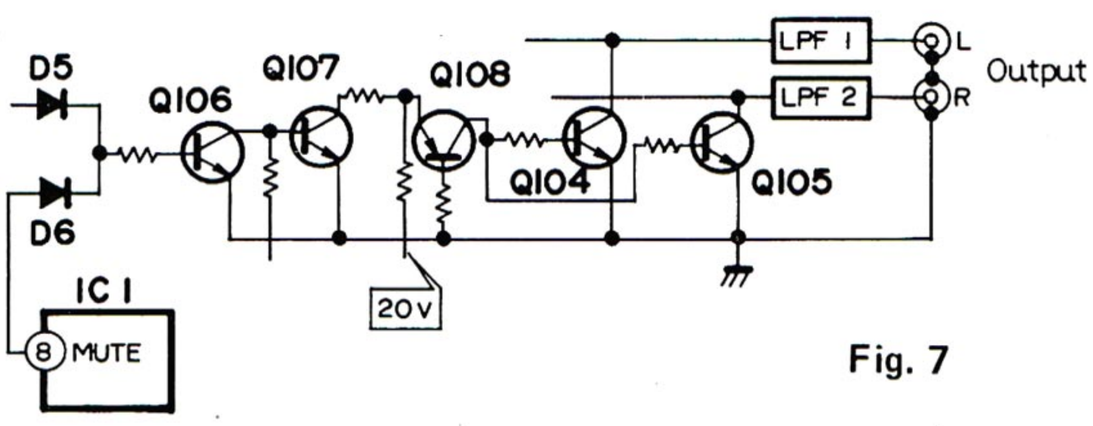

Fig. 7

When Q106 is set to ON, muting is applied.

When the FM/AM select button or the UP/DOWN button is pressed, 4.2 V is output to IC1 pin 8 and muting is applied.

3-2 MUTE button ON/OFF operation

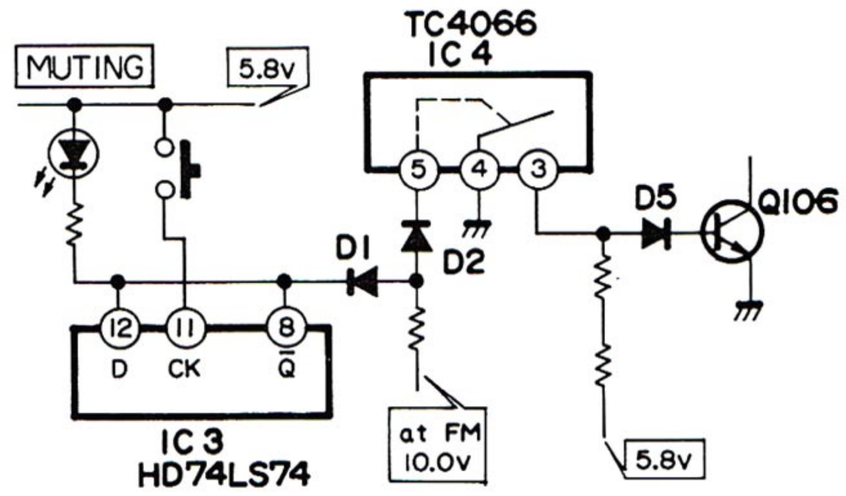

Fig. 8

When power is applied, IC3 pin 8 is set to 0 V, the MUTING indicator lamp lights and D1 is set to ON, so no voltage is applied to IC4 terminal 5 , and the switch between pin 3 and 4 is open. As a result, 1.5 V is applied to D5 anode and the unit enters the MUTING ON mode.

4. Hi-blend ON/OFF operation

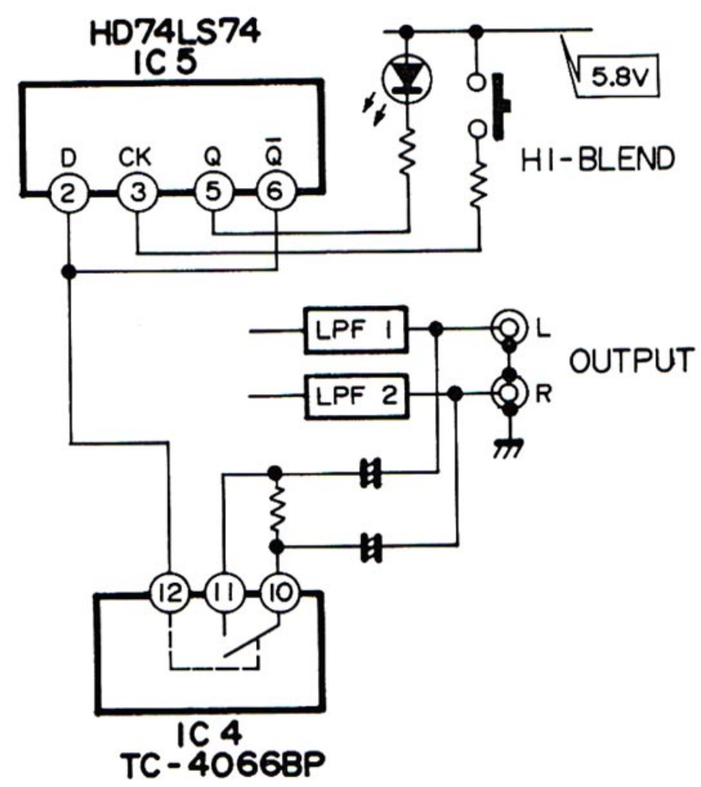

Fig. 9

When the HI-BLEND button is pressed, 4.4 V is applied to IC4 pin 12 and HI-BLEND is applied.

5. Memory indicator lighting

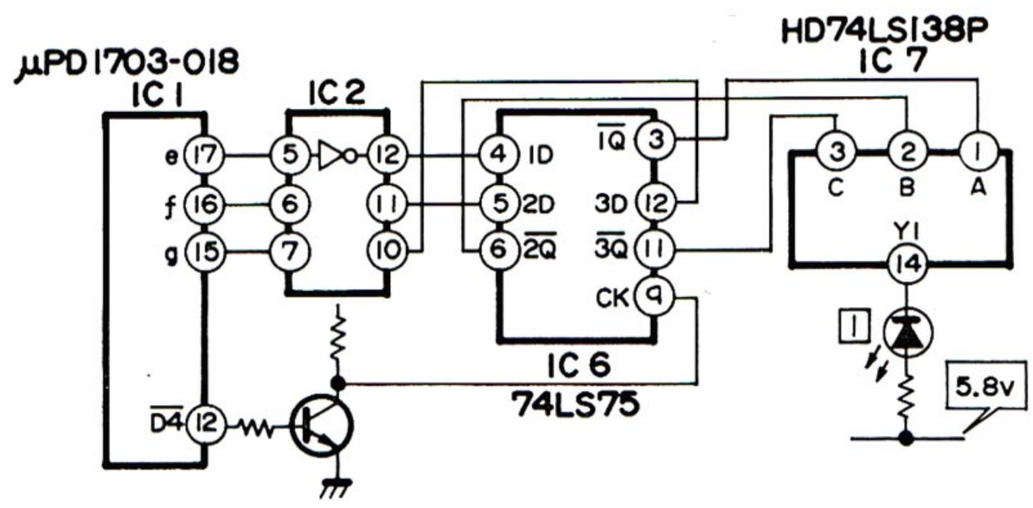

Fig. 10

IC6 is also a D flip-flop. When data (1D, 2D, 3D) is present when CLOCK (CK) is applied, they pass through it and appear as outputs (1Q, 2Q, 3Q).
IC7 interpretes this 3-bit signal.
For example, this is how memory (1) lights (figure 11).

www.hifiengine.com

Circuit description classified by symptom

Model ST-R80

1. FM/AM selection

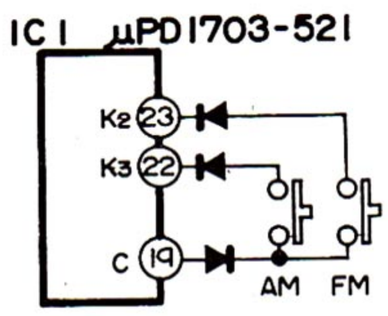

Fig. 1

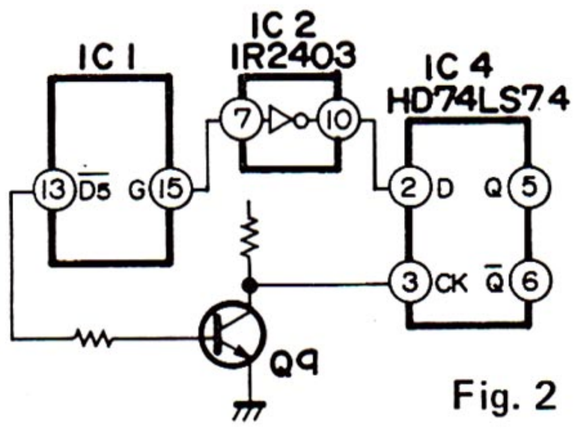

Fig. 2

The units is set to AM when the signal from pin 19 of IC1 μPD1703-521 enters pin 22, and set to FM when it enters pin 23.
The signal output from pin 13 as the IC1 output enters IC4 (D flip-flop IC) pin 3 via Q9. The output of pin 15 enters IC4 terminal 2 via IC2 (inverter IC). The input and output of IC4 are as shown in figure 3.

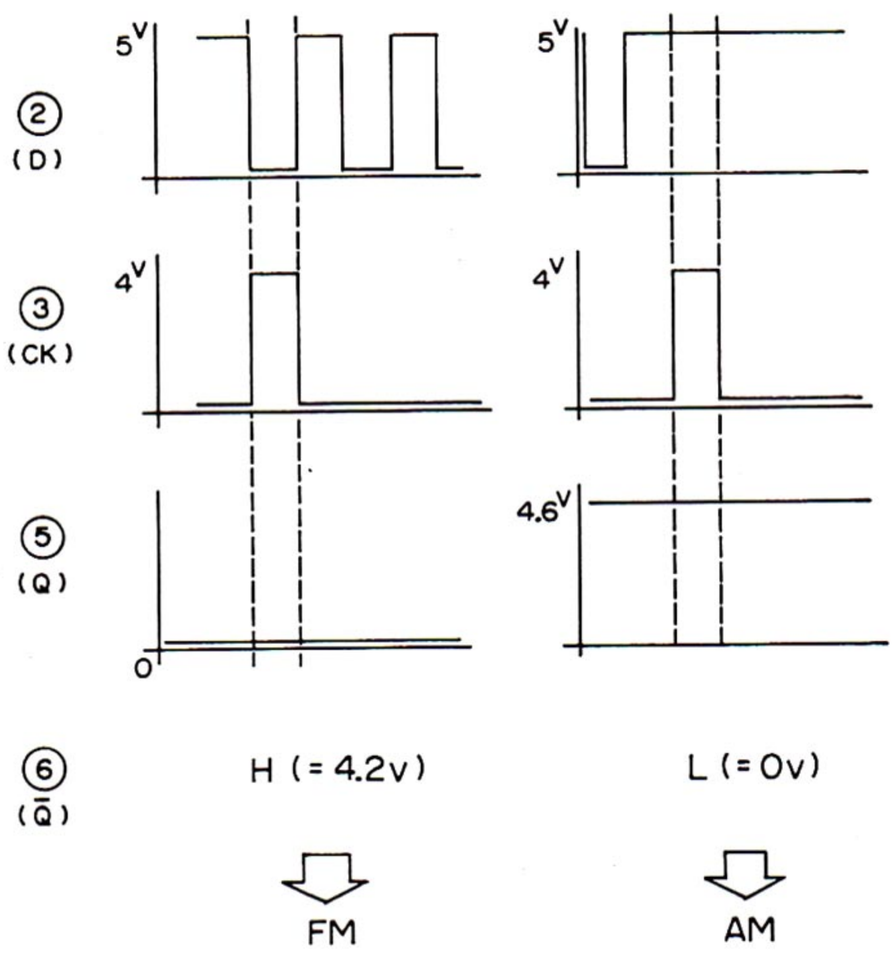

Fig. 3

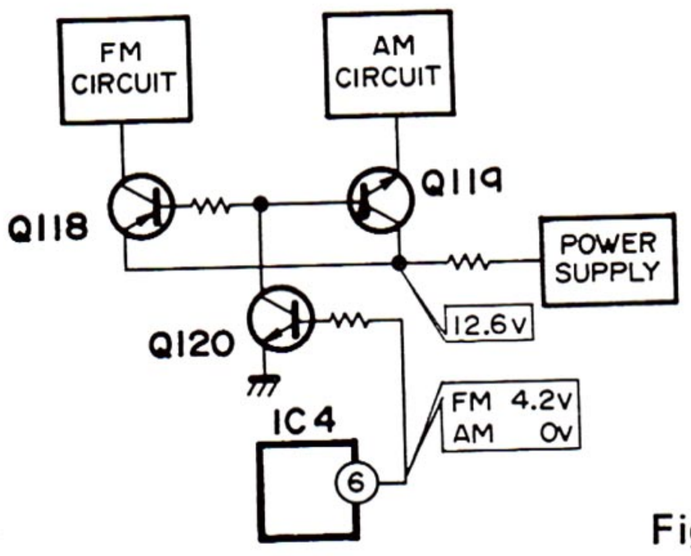

Fig. 4

IC4 pin 6 is set to 4.2 V during the FM mode, so Q120 Q118 are set to ON and 10 V is supplied to the FM circuit. IC pin 6 is set to 0 V during the AM mode, so Q119 is set to ON and 10 V is applied to the AM circuit.

2. AUTO/MANUAL selection

2-1 AUTO/MANUAL section

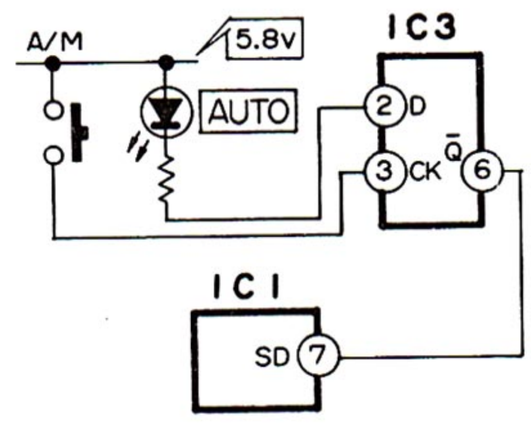

Fig. 5

IC3 pin 6 is set to 0 V when power is supplied and the AUTO: indicator lamp lights. When the AUTO/MANUAL botton is pressed next, since IC3 is the D flip-flop, pin 6 is set to 4.4 V, the "AUTO" indicator lamp goes off and at the same time 4.0 V is applied to IC1 pin 7 so that manual tuning becomes possible.

2-2 Auto stop

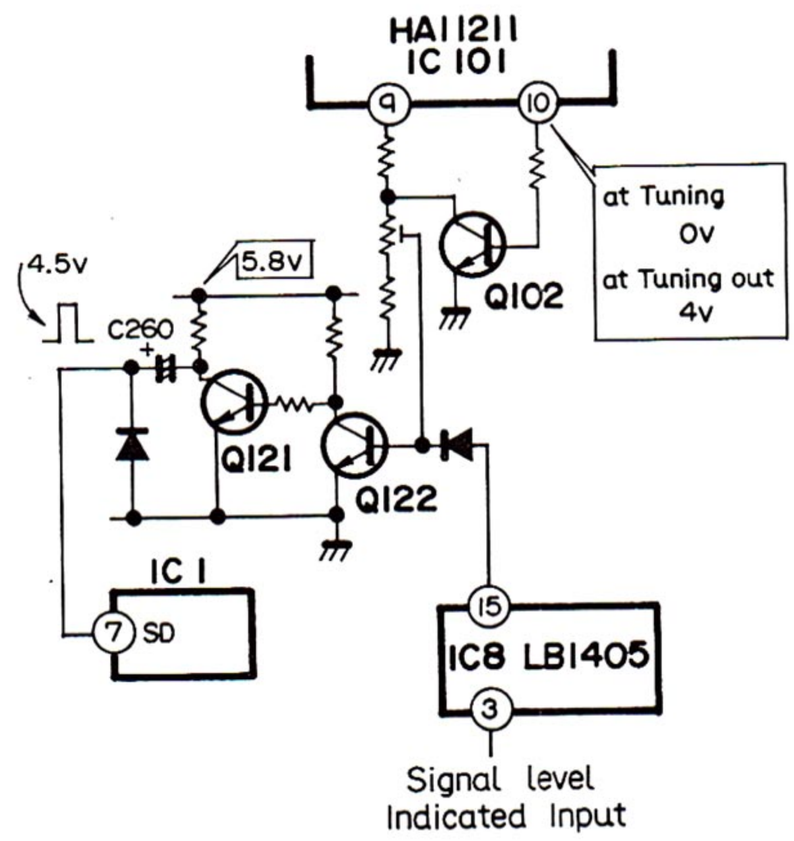

Fig. 6

When set to auto tuning, IC101 (HA11211) pin 10 is set to 0 V, so Q102 is OFF and the following operation is done by the output of pin 9.
When the sum of the output of IC101 pin 9 and IC8 (signal elevel indicator IC) is sufficient, Q122 is set to ON, Q121 to OFF and a pulse is generated at C260 and applied to IC1 pin 7, and Auto-stop is applied.
The voltage at this pin 7 is 1 ~ 3 V measured by a tester when it is tuned.

3. Muting circuit

3-1 During button operation

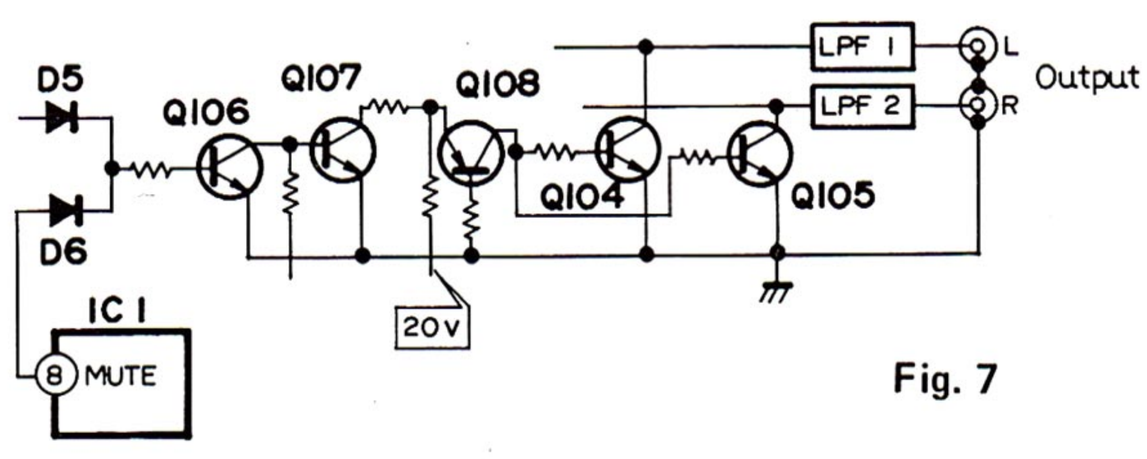

Fig. 7

When Q106 is set to ON, muting is applied.

www.hifiengine.com

NOTES (1) B(+) Pattern Component side pattern Others pattern
(2) The voltage is the reference value measured with a tester (20 K ohms/V DC) when there are no signals.
But ( ) is with AM reception.

WIRING

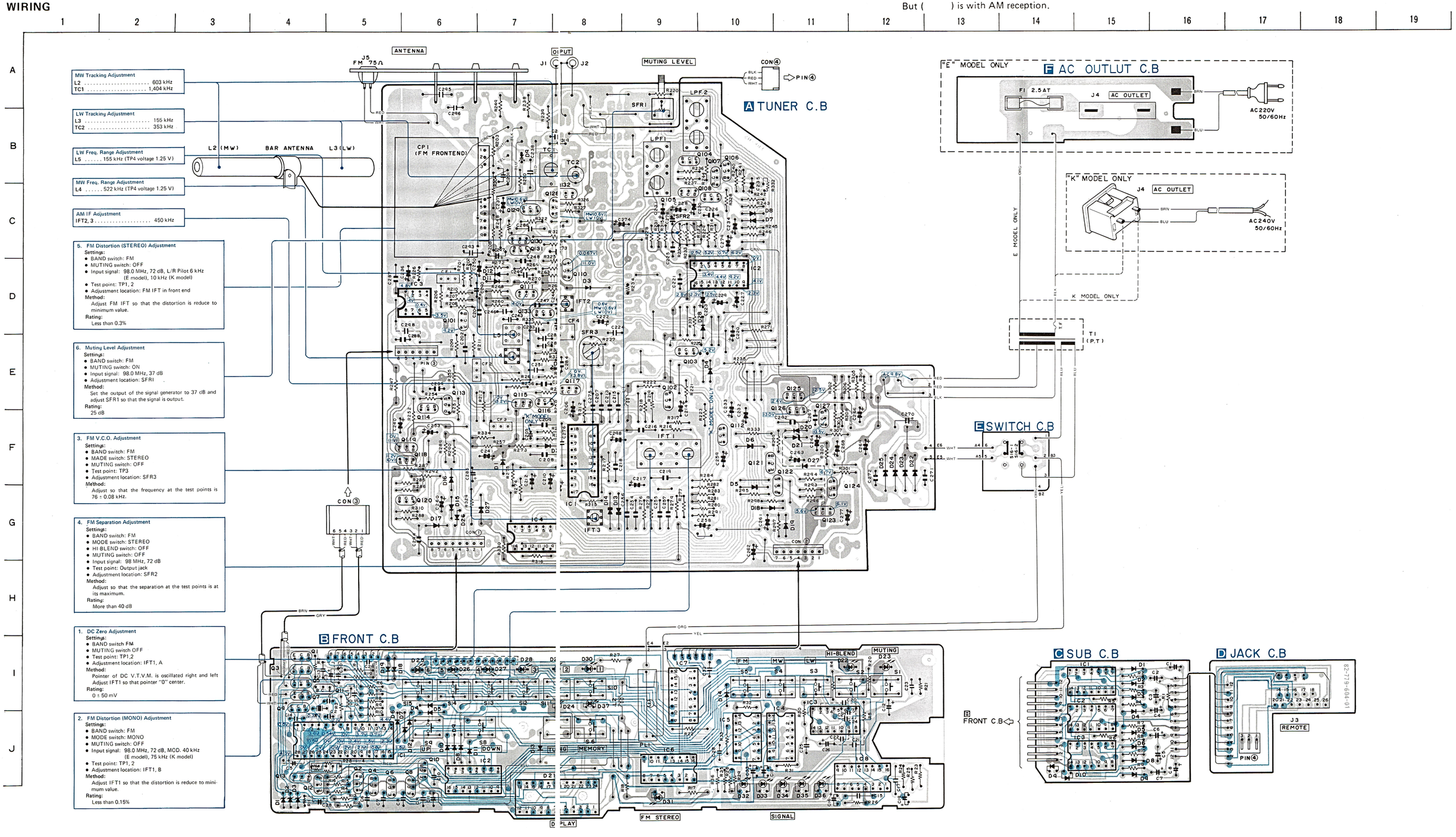

ELECTRICAL MAIN PARTS LIST=SA-C80E,K

Symbol No.	Part No.	Description
≪MAIN CIRCUIT BOARD SECTION≫		
PCB-A	*	Main circuit baord
IC1,3	87-027-629-01	IC, 4558DX
IC2	87-027-814-01	IC, NJM4562D-D
Q1,2,3,4	89-110-847-91	Transistor, 2SA 1084 (E1-E3)
Q5,6,11,13, 14	89-309-456-01	Transistor, 2SC945L (P)
Q7,8	89-320-011-01	Transistor, 2SC2001 (K)
Q9	89-304-954-01	Transistor, 2SC495 (Y)
Q10	89-105-054-01	Transistor, 2SA505 (Y)
Q12	89-107-336-01	Transistor, 2SA733 (P)
D1,2,3,4 13,14,15,16	87-027-219-01	Diode, MA150
D5,6	87-027-469-01	Zener diode, HZ162
D11,12	87-027-393-01	Zener diode, HZ4C2
D21,22	87-027-323-01	Zener diode, HZ22-2L
D23	87-027-376-01	Diode, 1B4B41
D30,31	87-027-365-01	Diode, S5277B
D32,33	87-027-097-01	Diode, 1S1555
J1~14	82-780-624-01	Pin jack, 14P (PHONO, AUX, TAPE 2 PLAY, TUNER, TAPE 1 REC, TAPE 1 PLAY, OUTPUT)
VR2	87-021-686-01	Volume, 250kΩ - W,D (BALANCE)
VR3	87-021-683-01	Volume, 50kΩ - 0 (TREBLE)
VR4	87-021-682-01	Volume, 50kΩ - S (BASS)
S1~6	82-780-620-01	Push-switch (FUNCTION)
S7~12	82-780-621-11	Push-switch (DSL I/II, LOW FILTER, MODE, LOUDNESS, MUTING)
⚠ S13	87-031-560-01	Push-switch (POWER)
RY1	87-045-134-01	Relay, 224S
PIN	87-032-641-01	Pin, 11P
		< Resistors >
R254	87-025-154-01	270Ω 1W Metal film resistor
R21,22	87-025-274-01	82Ω ¼W Metal film resistor
R19,20	87-025-280-01	3.9kΩ ¼W Metal film resistor
R17,18	87-025-288-01	47kΩ ¼W Metal film resistor
		< Capacitors >
C3,4	87-015-643-01	2.2μF 50V Electrolytic LL
C17,18	87-015-640-01	3300μF 6.3V Electrolytic SM
C13,14	87-014-122-01	0.018μF PP
C11,12	87-014-123-01	0.068μF PP
⚠ C180	87-019-112-01	0.01μF Spark killer
≪VOLUME CIRCUIT BOARD SECTION≫		
PCB-B	*	Volume circuit board
VR1	87-021-685-01	Volume, 100 kΩ - B, D (VOLUME)
≪LED CIRCUIT BOARD SECTION≫		
PCB-C	*	LED circuit board
D1~6	87-027-543-01	LED, LN317GP
≪POWER CIRCUIT BOARD SECTION≫		
⚠ PCB-D	*	Power circuit board (E model only)
⚠ PCB-D	*	Power circuit board (K model only)
⚠ J15	87-049-014-01	AC outlet (E model only)
⚠ J15,16	87-032-996-01	AC outlet (K model only)
⚠ F1	87-035-139-01	Fuse, "T" 2.5A (E model only)
	87-098-020-01	Fuse label, "T" 2.5A (E model only)
⚠	87-033-147-01	Fuse clamp (E model only)

Symbol No.	Part No.	Description
		< Capacitor >
⚠ C190	87-019-112-01	0.01μF Spark killer
≪MISCELLANEOUS≫		
⚠ T1	82-780-602-01	Power transformer (E mode
⚠ T1	82-780-603-01	Power transformer (K mode
⚠	87-034-877-01	AC power cord (E model or
⚠	87-034-872-01	AC power cord (K model or
⚠	87-085-166-01	Holder, AC power cord

⚠ Safety component symbol

This symbol is given to important parts which serve to maintai the safety of the product, and which are made to conform to speci safety specifications. Therefore, when replacing a component wit this symbol, make absolutely sure that you use a designated part.

Note; Combination Circuit Board

The parts on the electrical parts list which are indicated by a asterisk (*) are supplied as one single combined circuit boar Therefore, they will not be supplied separately. If this becom necessary, please order the entire circuit board.

Combination circuit board 82-780-611-01

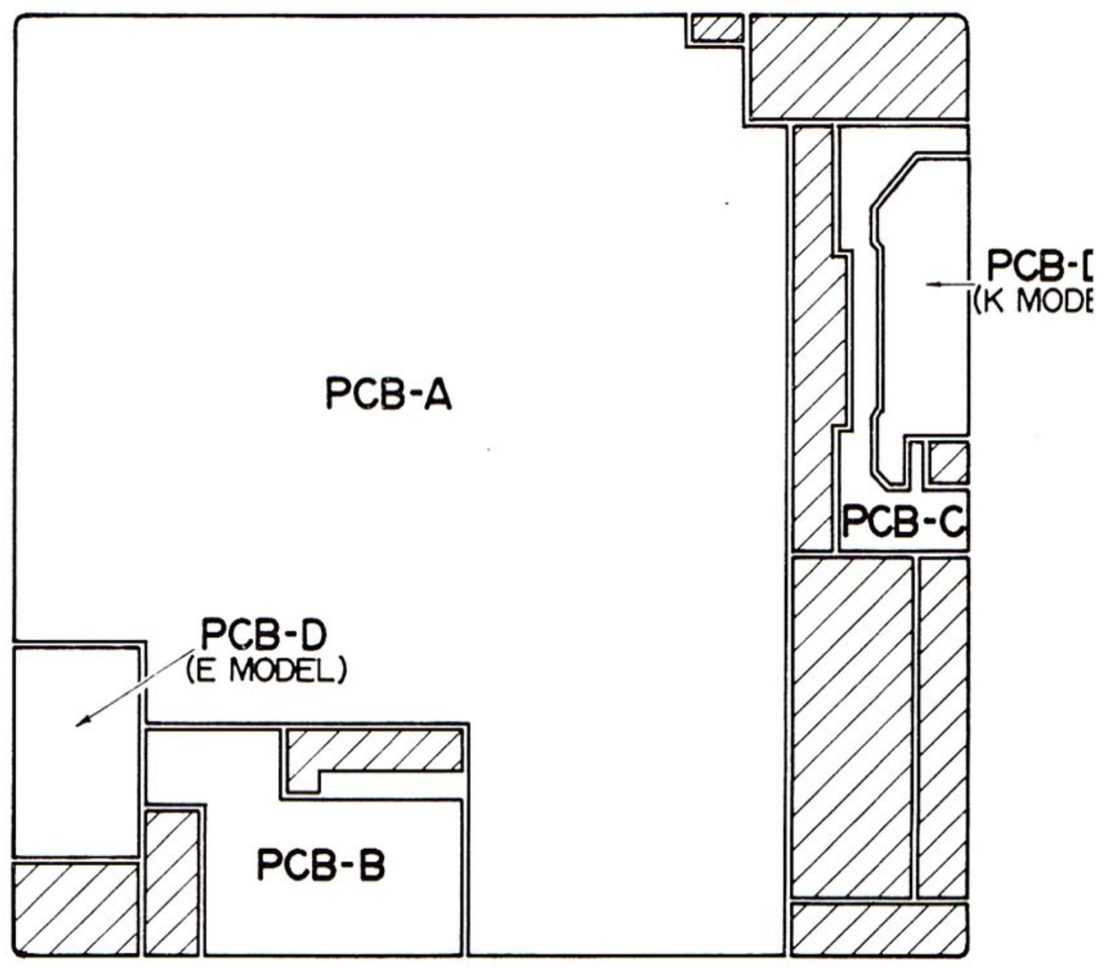

ELECTRICAL MAIN PARTS LIST=SA-P80

Symbol No.	Part No.	Description
≪MAIN CIRCUIT BOARD SECTION≫		
PCB-A	*	Main circuit board
IC1,2	87-027-789-01	IC, STK-8250
IC3	87-027-379-01	IC, TA7317P
Q11,12	89-309-456-01	Transistor, 2SC945L(P)
Q13	89-109-654-01	Transistor, 2SA965 (Y)
Q14	89-322-354-01	Transistor, 2SC2235 (Y)
Q15	89-107-336-01	Transistor, 2SA733 (P)
D13,14,64 65	87-027-219-01	Diode, MA150
D33	87-027-365-01	Diode, S5277B
D85,88	87-027-323-01	Zener diode, HZ22-2L
D86,87	87-027-322-01	Zener diode, HZ18-2
D89,90,91, 92	87-027-626-01	Diode, S5277D
D93	87-027-788-01	Diode, D5FB20
D94	87-027-376-01	Diode, 1B4B41
L1,2	82-499-639-01	Inductor coil, 1μH
SFR5	87-021-698-01	Semi-fixed resistor, 47kΩ-B
RY1	87-045-168-01	Relay, G4D-12V
PIN-1	82-481-649-01	Pin, 2P
PIN-2	87-032-897-01	Pin, 3P
		< **Resistors** >
⚠R141	87-029-066-01	1.5Ω ½W Fuse resistor
⚠R167,168,169, 170	87-029-114-01	4.7Ω ¼W Fuse resistor
R59,60	87-025-318-01	10Ω 1W Metal film resistor
R61,62	87-025-193-01	10Ω 2W Metal film resistor
R65,66	87-025-055-01	270Ω 2W Metal film resistor
R49,50	87-025-246-01	0.33Ω 3W Cement resistor
		< **Capacitors** >
C119,120	87-015-916-01	22μF 100V Electrolytic
C115,116	87-015-914-01	47μF 100V Electrolytic
C121,122	87-015-894-01	15000μF 50V Electrolytic
C58,60	87-015-639-01	47μF 10V Electrolytic, BP
≪DRIVER (Lch) CIRCUIT BOARD SECTION≫		
PCB-B	*	Driver (Lch) circuit board
Q1	89-501-505-01	FET, 2SK150GR
Q3	89-309-456-01	Transistor, 2SC945L (P)
Q5	89-315-834-01	Transistor, 2SC1583 (F)
Q7	89-111-246-01	Transistor, 2SA1124 (R)
Q9	89-326-326-01	Transistor, 2SC2632 (R)
D1	87-027-323-01	Zener diode, HZ22-2L
D3	87-027-469-01	Zener diode, HZ16-2
D5,9	87-027-219-01	Diode, MA150
D7	87-027-475-01	Zener diode, HZ-6B1
SFR1	87-021-559-01	Semi-fixed resistor, 100Ω-B
SFR3	87-021-694-01	Semi-fixed resistor, 10kΩ-B
		< **Capacitor** >
C39	87-015-141-01	10μF 16V Electrolytic, BP
≪DRIVER (Rch) CIRCUIT BOARD SECTION≫		
PCB-C	*	Driver (Rch) circuit board
Q2	89-501-505-01	FET, 2SK150GR
Q4	89-309-456-01	Transistor, 2SC945L (P)
Q6	89-315-834-01	Transistor, 2SC1583 (F)
Q8	89-111-246-01	Transistor, 2SA1124 (R)
Q10	89-326-326-01	Transistor, 2SC2632 (R)
D2	87-027-323-01	Zener diode, HZ22-2L
D4	87-027-469-01	Zener diode, HZ16-2
D6,10	87-027-219-01	Diode, MA150
D8	87-027-475-01	Zener diode, HZ-6B1
SFR2	87-021-559-01	Semi-fixed resistor, 100Ω-B
SFR4	87-021-694-01	Semi-fixed resistor, 10kΩ-B

Symbol No.	Part No.	Description
		< **Capacitor** >
C40	87-015-141-01	10μF 16V Electrolytic
≪LED CIRCUIT BOARD SECTION≫		
PCB-D	*	LED circuit board
IC4	87-027-816-01	IC, LB1409
Q16	89-405-712-01	Transistor, 2SD571 (L)
D52	87-027-732-01	LED, SG-235D
D53,54,55,56, 57,58,59,60, 61	87-027-731-01	LED, SR-535D
PIN	87-032-636-01	Pin, 6P
≪POWER CIRCUIT BOARD SECTION≫		
⚠PCB-E	*	Power circuit board
⚠S3	87-031-552-01	Push-switch (POWER)
		< **Capacitor** >
⚠C127	87-019-112-01	0.01μF Spark killer
≪SWITCH CIRCUIT BOARD SECTION≫		
PCB-F	*	Switch circuit board
S1,2	82-781-624-01	Push-switch (SPEAKERS A, B)
≪JACK CIRCUIT BOARD-1 SECTION≫		
PCB-G	*	Jack circuit board-1
J3	87-032-979-01	Jack, 6.3φ (PHONES)
PIN	87-032-638-01	Pin, 8P
≪JACK CIRCUIT BOARD-2 SECTION≫		
PCB-H	*	Jack circuit board-2
J1,2	82-781-623-01	Pin jack, 2P (INPUT)
	82-774-648-01	Speaker terminal, 8P
≪MISCELLANEOUS≫		
⚠T1	82-781-605-01	Power transformer (E model on
⚠T1	82-781-606-01	Power transformer (K model on
⚠	87-034-841-01	AC power cord (E model only)
⚠	87-034-942-01	AC power cord (K model only)
⚠F1	87-035-190-01	Fuse, "T" 2A
	87-098-019-01	Fuse label, "T" 2A
⚠	87-085-166-01	Holder, AC power cord
⚠	87-033-161-01	Fuse holder, 1P

⚠ Safety component symbol

This symbol is given to important parts which serve to maintain the safety of the product, and which are made to conform to special safety specifications. Therefore, when replacing a component with this symbol, make absolutely sure that you use a designated part.

Note; Combination Circuit Board

The parts on the electrical parts list which are indicated by an asterisk (*) are supplied as one single combined circuit board. Therefore, they will not be supplied separately. If this becomes necessary, please order the entire circuit board.

Combination circuit board 82-781-610-01

www.hifiengine.com

Symbol No.	Part No.	Description
		< Capacitor >
C40	87-015-141-01	10μF 16V Electrolytic BP
≪ LED CIRCUIT BOARD SECTION ≫		
PCB-D	*	LED circuit board
IC4	87-027-816-01	IC, LB1409
Q16	89-405-712-01	Transistor, 2SD571 (L)
D52	87-027-732-01	LED, SG-235D
D53,54,55,56, 57,58,59,60, 61	87-027-731-01	LED, SR-535D
PIN	87-032-636-01	Pin, 6P
≪ POWER CIRCUIT BOARD SECTION ≫		
⚠ PCB-E	*	Power circuit board
⚠ S3	87-031-552-01	Push-switch (POWER)
		< Capacitor >
⚠ C127	87-019-112-01	0.01μF Spark killer
≪ SWITCH CIRCUIT BOARD SECTION ≫		
PCB-F	*	Switch circuit board
S1,2	82-781-624-01	Push-switch (SPEAKERS A, B)
≪ JACK CIRCUIT BOARD-1 SECTION ≫		
PCB-G	*	Jack circuit board-1
J3	87-032-979-01	Jack, 6.3φ (PHONES)
PIN	87-032-638-01	Pin, 8P
≪ JACK CIRCUIT BOARD-2 SECTION ≫		
PCB-H	*	Jack circuit board-2
J1,2	82-781-623-01	Pin jack, 2P (INPUT)
	82-774-648-01	Speaker terminal, 8P
≪ MISCELLANEOUS ≫		
⚠ T1	82-781-605-01	Power transformer (E model only)
⚠ T1	82-781-606-01	Power transformer (K model only)
⚠	87-034-841-01	AC power cord (E model only)
⚠	87-034-942-01	AC power cord (K model only)
⚠ F1	87-035-190-01	Fuse, "T" 2A
	87-098-019-01	Fuse label, "T" 2A
⚠	87-085-166-01	Holder, AC power cord
⚠	87-033-161-01	Fuse holder, 1P

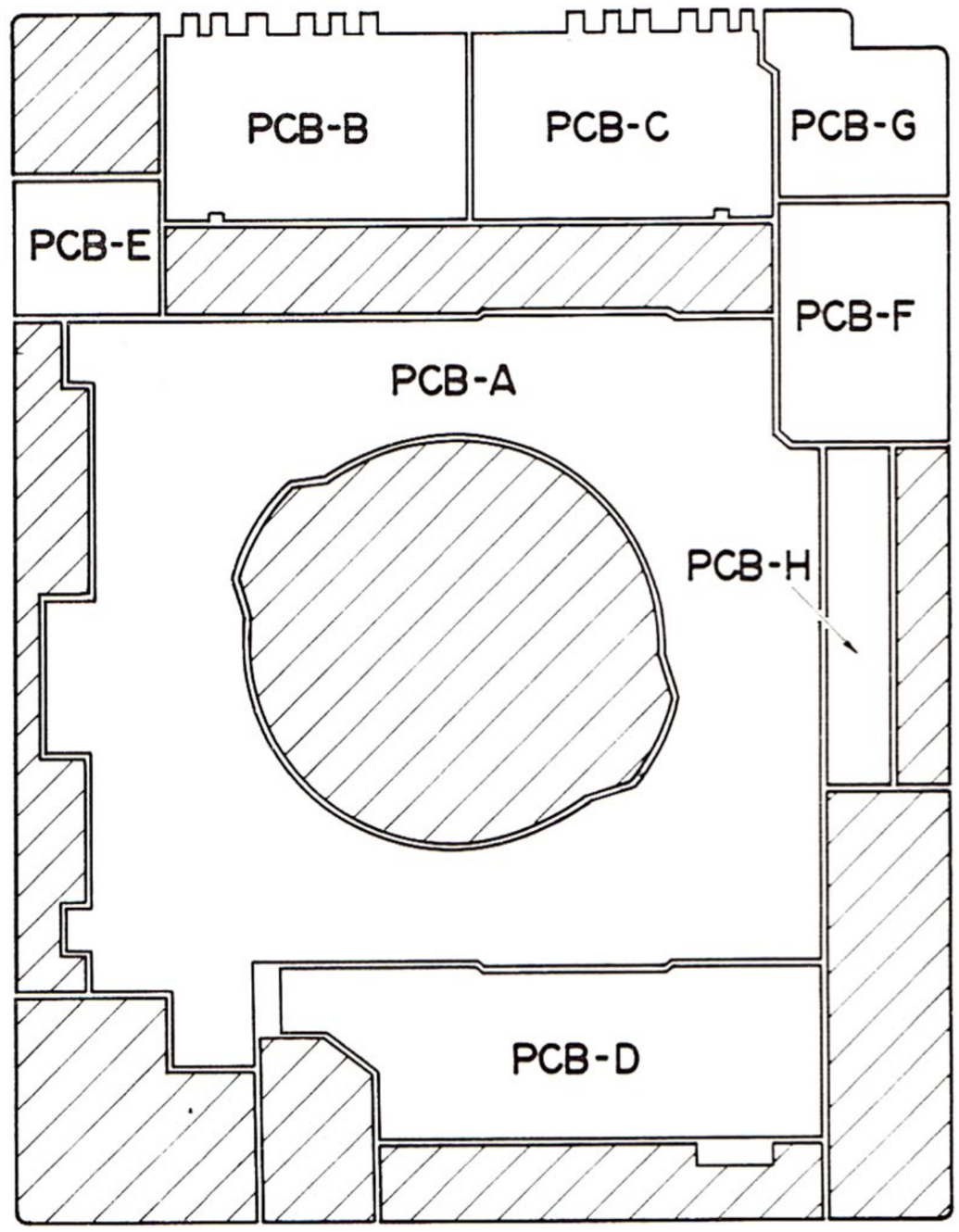

⚠ Safety component symbol

This symbol is given to important parts which serve to maintain the safety of the product, and which are made to conform to special safety specifications. Therefore, when replacing a component with this symbol, make absolutely sure that you use a designated part.

Note; Combination Circuit Board

The parts on the electrical parts list which are indicated by an asterisk (*) are supplied as one single combined circuit board. Therefore, they will not be supplied separately. If this becomes necessary, please order the entire circuit board.

Combination circuit board 82-781-610-01

www.hifiengine.com

SCHEMATIC DIAGRAM

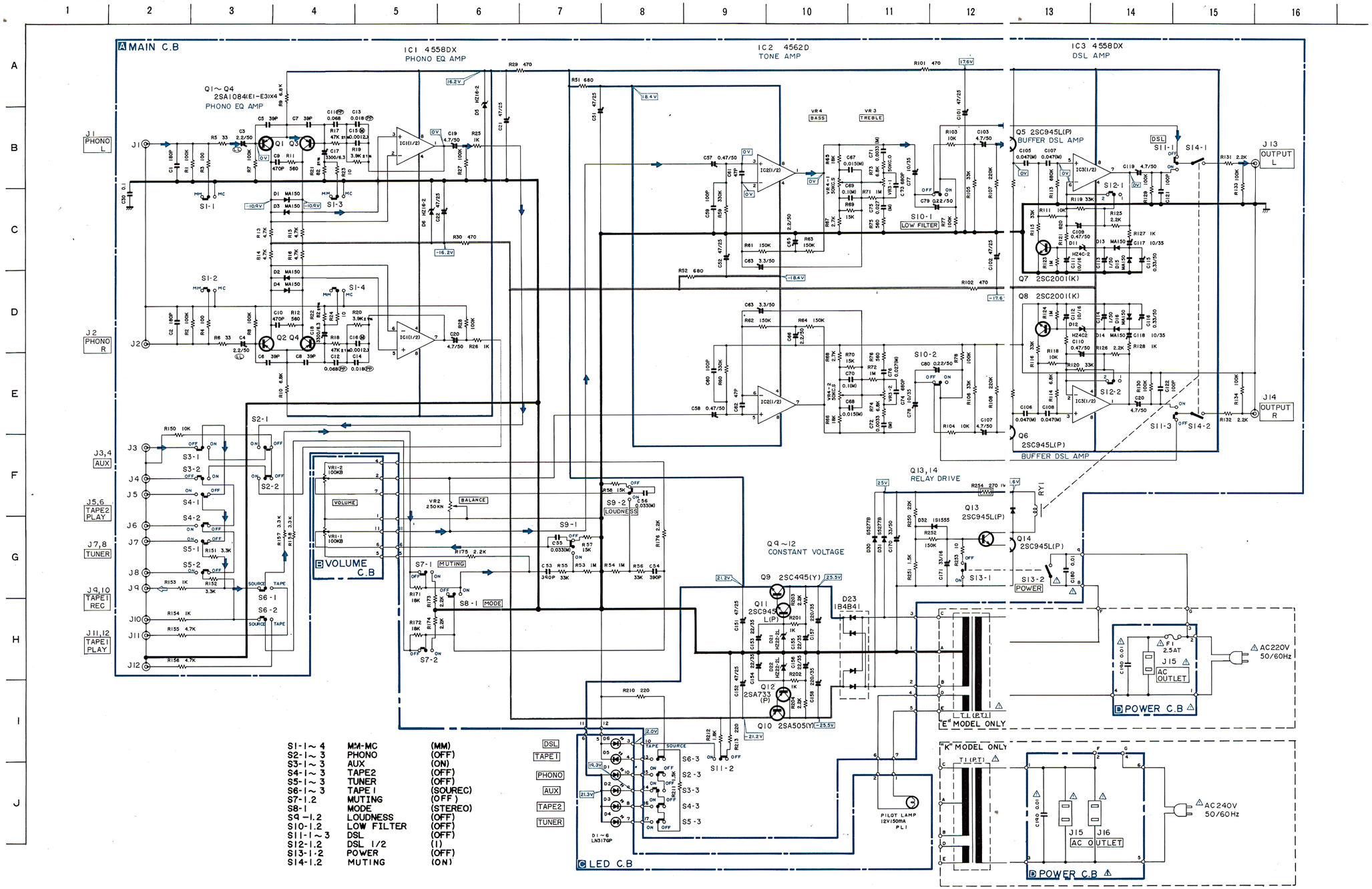

S1-1~4	MM-MC	(MM)
S2-1~3	PHONO	(OFF)
S3-1~3	AUX	(ON)
S4-1~3	TAPE2	(OFF)
S5-1~3	TUNER	(OFF)
S6-1~3	TAPE 1	(SOUREC)
S7-1.2	MUTING	(OFF)
S8-1	MODE	(STEREO)
SQ -1.2	LOUDNESS	(OFF)
S10-1.2	LOW FILTER	(OFF)
S11-1~3	DSL	(OFF)
S12-1.2	DSL 1/2	(1)
S13-1.2	POWER	(OFF)
S14-1.2	MUTING	(ON)

NOTES:

1) B (+) power supply B (−) power supply
2) Signal path
   Rec path,
3) The voltage is the reference value measured with a tester (20 k-ohms/V DC) when there are no signals.
4) Resistors with no designation have a rated power of 1/4W and a tolerance of ±5%.
5) Capacitors with no designation have a dielectirc strneght of less than 50WV.
6) The only capacitor tolerance indicated are ±5% (J) and ±10% (K).
7) Ceramic capacitor symbols:
   High dielectric constant system (YY)
   High dielectric constant system (YW, YP, YZ)
8) Explanation of symbols
   Mylar capacitor
   Aluminum solid capacitor
   Polypropylene film capacitor
   Bi-polarized capacitor
   Low-leakage capacitor
   Fuse resistor
   Nonflammable resistor

Safety component symbol
This symbol is given to important parts which serve to maintain the safety of the product, and which are made to conform to special safety specifications. Therefore, when replacing a component with this symbol, make absolutely sure that you use a designated part.

- This schematic diagram is subject to change without notice in the interests of improved performance.

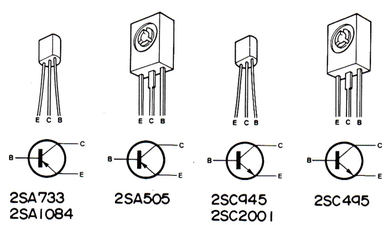

WIRING

NOTES (1) B(+) Pattern B (−) Pattern Others pattern
(2) The voltage is the reference value measured with a tester (20 K ohms/V DC) when there are no signals.

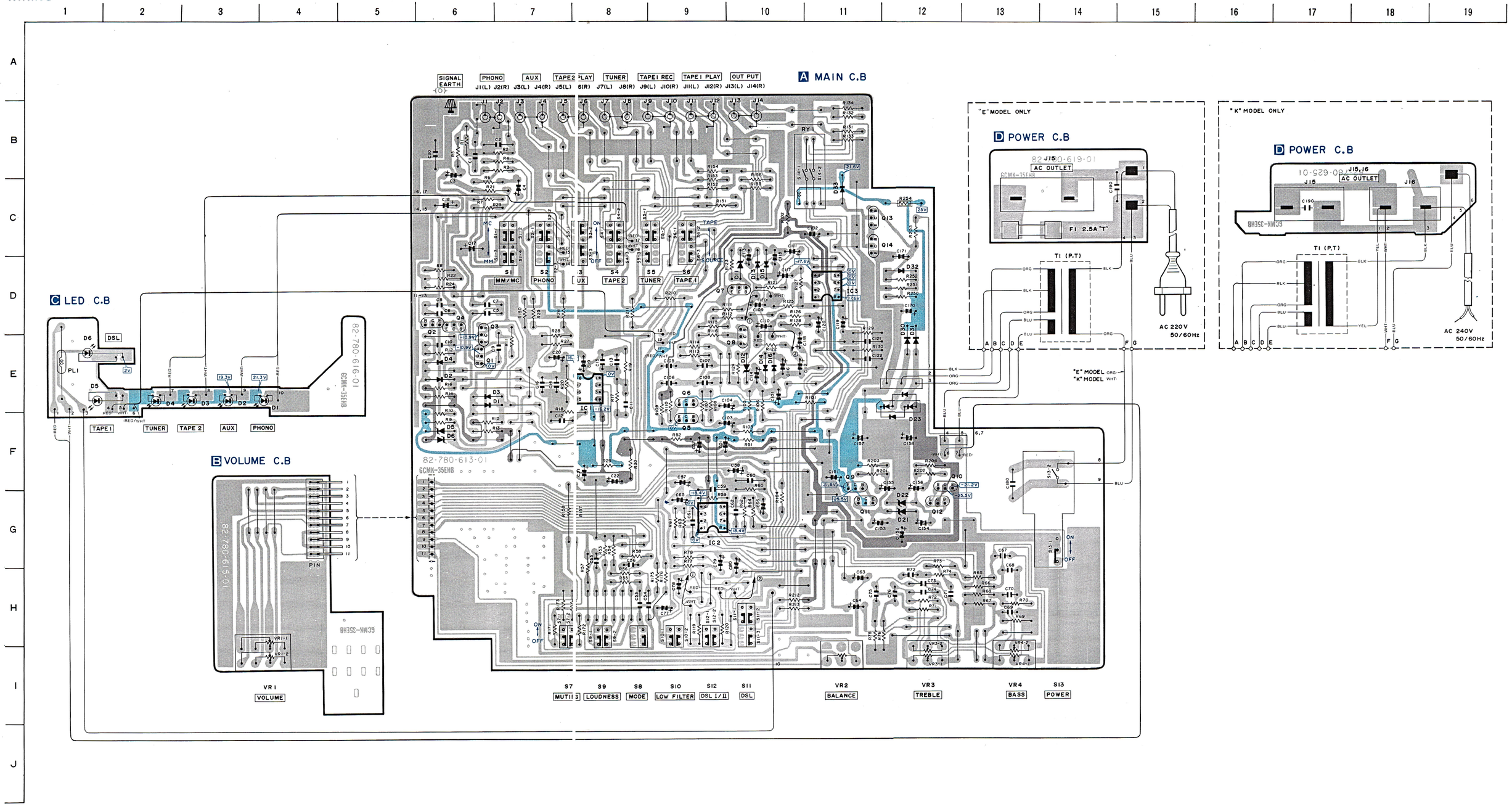

SCHEMATIC DIAGRAM

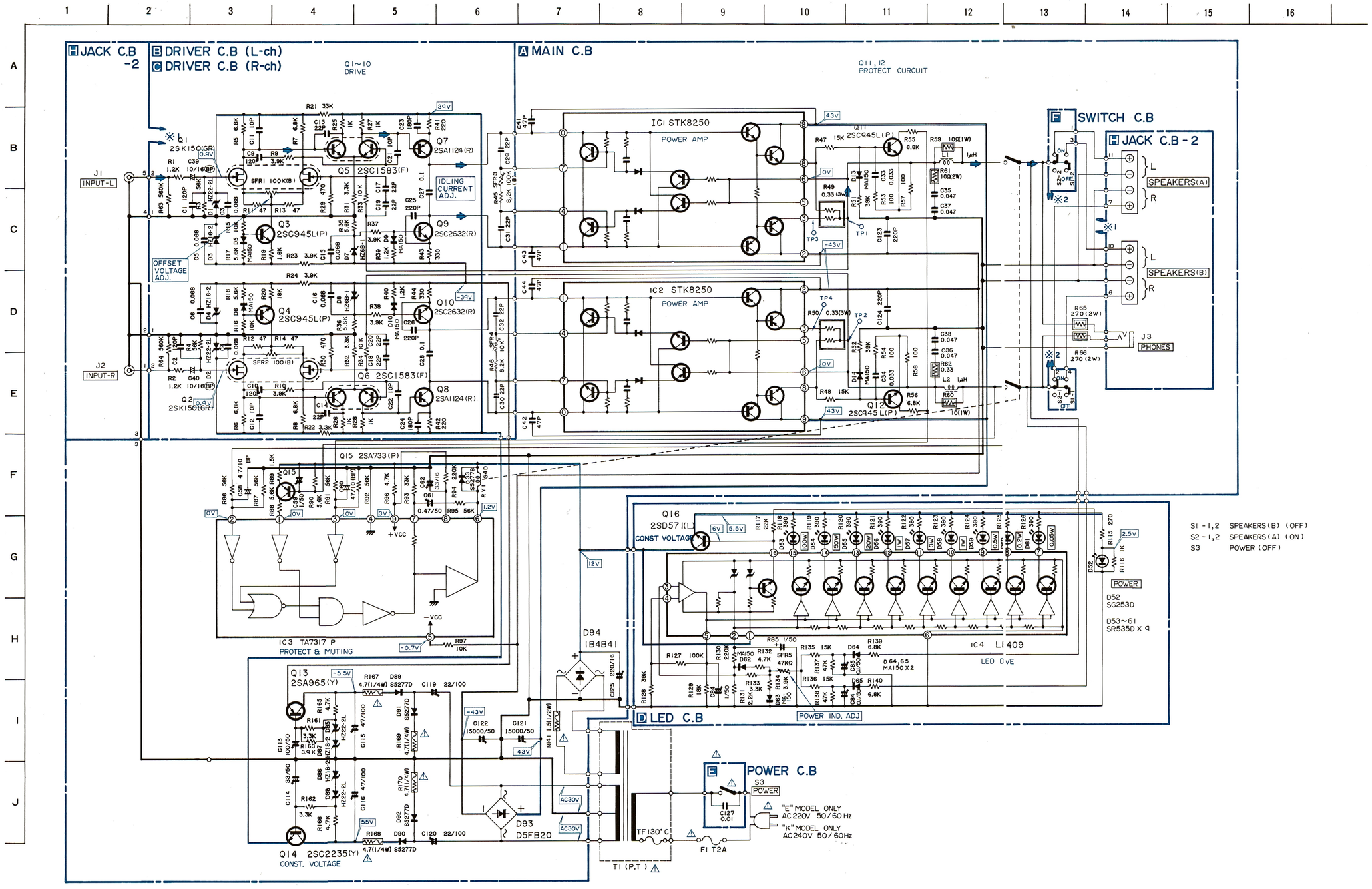

NOTES:

1) B (+) power supply B (−) power supply
2) Signal path
3) The voltage is the reference value measured with a tester (20 k-ohms/V DC) when there are no signals.
4) Resistors with no designation have a rated power of 1/4W and a tolerance of ±5%.
5) Capacitors with no designation have a dielectirc strneght of less than 50WV.
6) The only capacitor tolerance indicated are ±5% (J) and ±10% (K).
7) Ceramic capacitor symbols:
   High dielectric constant system (YY)
   High dielectric constant system (YW, YP, YZ)
8) Explanation of symbols
   (M) Mylar capacitor
   (A) Aluminum solid capacitor
   (PP) Polypropylene film capacitor
   (BP) Bi-polarized capacitor
   (LL) Low-leakage capacitor
   Fuse resistor
   Nonflammable resistor

⚠ Safety component symbol
This symbol is given to important parts which serve to maintain the safety of the product, and which are made to conform to special safety specifications. Therefore, when replacing a component with this symbol, make absolutely sure that you use a designated part.
This schematic diagram is subject to change without notice in the interests of improved performance.

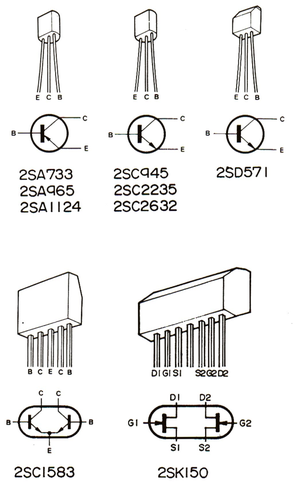

WIRING

NOTES (1) B(+) Pattern B (−) Pattern Others pattern
(2) The voltage is the reference value measured with a tester (20 K ohms/V DC) when there are no signals.

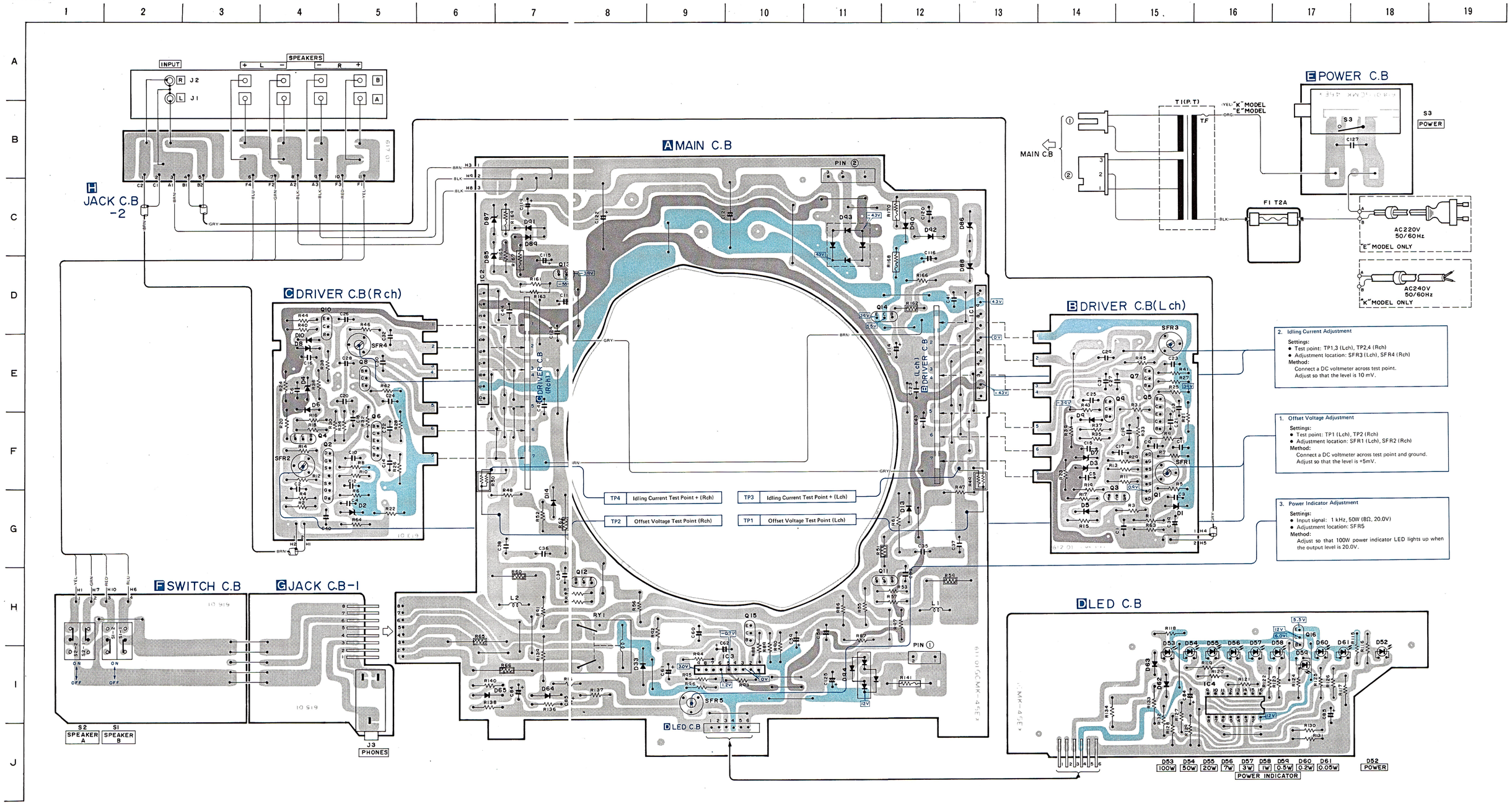

810925(1)-Z

AIWA CO., LTD.

Printed in Japan

www.hifiengine.com